1986

IC MASTER

VOL. I

DEVENEY
2-APRIL-86

FULL SPECTRUM OF

NEC PUTS IT ALL TOGETHER... CMOS MICROPROCESSORS, SINGLE-CHIP MICROCOMPUTERS, AND ADVANCED PERIPHERALS.

The most advanced user-oriented product line in the industry. One designed with the variables necessary to give you a choice.

Advanced CMOS Microprocessors

NEC's new V-Series advanced CMOS microprocessors puts a system on a chip. The V20 and V30 starts it off by giving you 101 instructions and all the advantages of CMOS. They're everything the 8088/8086 should have been.

The V40 and V50 takes the series to the next level. A system on a chip. The on-board peripherals allow you to reduce the external components while improving overall system efficiency.

Single-Chip Microcomputers

NEC offers the most comprehensive line of 4- and 8-bit single-chip microcomputers in the industry. Now you have a choice. Design your next system with the device suited to your application. Don't try to fit your design around a single device.

The next generation of 16-bit single-chip microcomputers is here. The first of the series, the μPD78310 and μPD78312, are now available with newer devices on the way.

Advanced Complex Peripherals

NEC's full range of complex peripherals gives you five ways to simplify your design. The devices may be complex, but their end result simplifies your system. Replace numerous inefficient components or even whole circuit boards.

Call Toll Free Today.

For more information on NEC's advanced product offering, call us at **1-800-632-3531.** In California: **1-800-632-3532.**

©Copyright 1985 by NEC Electronics, Inc.

WE'RE TAKING ON THE FUTURE

NEC

NEC Electronics Inc.

401 Ellis Street
P.O. Box 7241
Mountain View, CA 94039

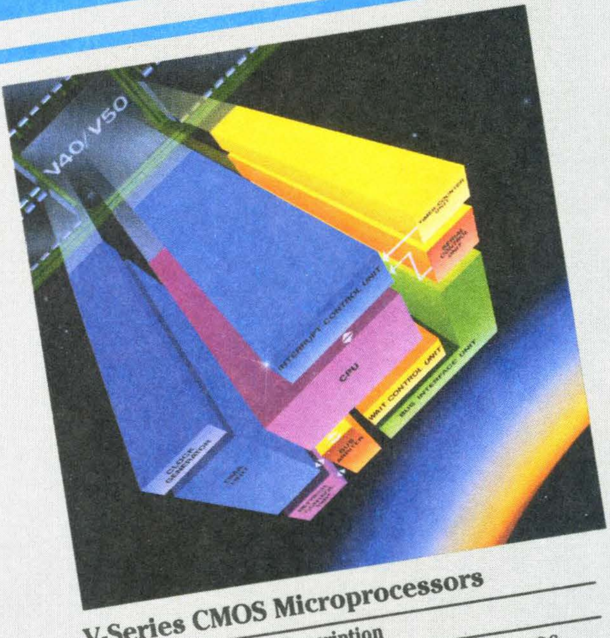

V-Series CMOS Microprocessors

Device	Description
μPD70108	16-bit high-performance CMOS microprocessor
μPD70116	16-bit high-performance CMOS microprocessor
μPD70208	16-bit high-integration CMOS microprocessor
μPD70216	16-bit high-integration CMOS microprocessor

MICROCOMPUTER PRODUCTS

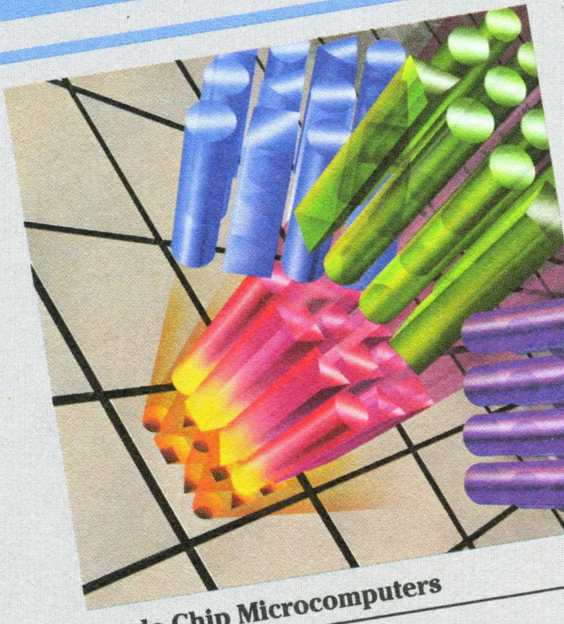

Single-Chip Microcomputers

Family	Description
7500 Series	4-bit single-chip microcomputers 33 different types
75000 Series	4-bit single-chip microcomputers 3 now and more to come
7800 Series	8-bit single-chip microcomputers 17 different types
78000 Series	16-bit single-chip microcomputers 2 now and more to come

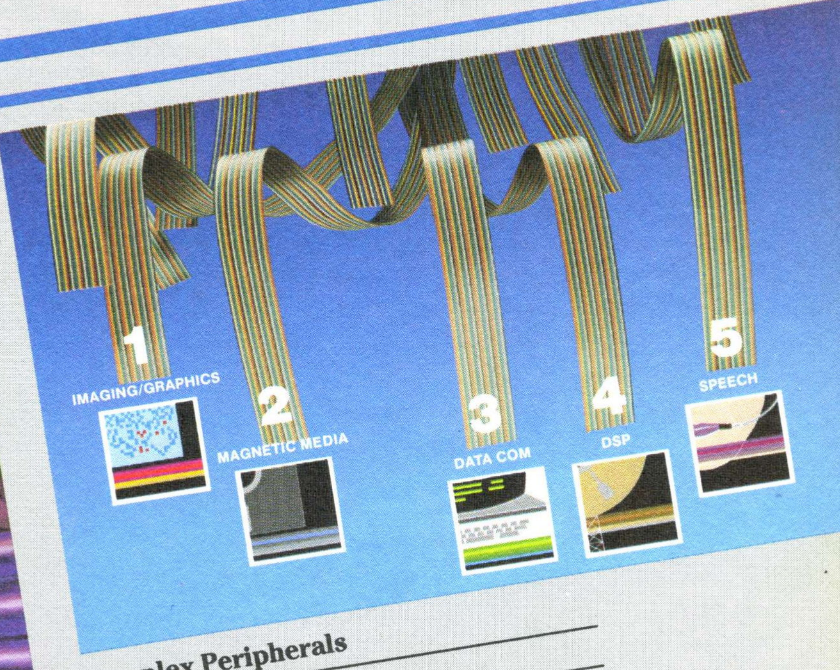

Complex Peripherals

Device	Description
1. Graphics/Imaging	
µPD7281	Image Pipelined Processor (IMPP)
µPD9305	MAGIC (Interface for IMPP)
µPD7220A	Graphic Display Controller (HGDC)
2. Magnetic Media	
µPD765A	Floppy Disk Controller
µPD9201	Floppy Disk Interface
µPD7261A	Hard Disk Controller
µPD9306	Hard Disk Interface
3. Data Communications	
µPD7210	GPIB/Talker, Listener, Controller
µPD7201A	Multiprotocol Serial Controller
4. Digital Signal Processing	
µPD7720	General Purpose Digital Signal Processor
µPD77P20	EPROM version of 7720
5. Speech	
µPD7730	ADPCM speech encoder/decoder
µPD7756/59	ADPCM phoneme speech synthesizer
	Speech recognition 3-chip set

A FAST COURSE IN APPLIED LOGIC.

FAST™ Applications Handbook
FAIRCHILD
A Schlumberger Company

Complex problems often require FAST™ answers.

And you'll find those answers in our new 1985 FAST Applications Handbook. Over 250 pages of solutions to system problems that help you design faster than ever before. And it's yours for the asking.

The FAST Applications Handbook guides you function by function through actual implementation of high speed circuit logic designs. Also included is a complete cross reference guide by function. And a complete listing of Fairchild authorized distributors and worldwide sales offices. Which makes if even easier to order more FAST parts or additional information.

For your free copy, just call The Fairchild Information Center at 1-800-554-4443. Or write Fairchild Digital Unit, 333 Western Avenue, South Portland, ME 04106.

You won't find a faster, more logical tool anywhere. FAST® And you certainly can't beat the price.

FAST (Fairchild Advanced Schottky TTL) is a trademark and the FAST logo is a registered trademark of Fairchild Semiconductor Corporation. © 1985 Fairchild Semiconductor Corporation.

We're taking the high ground.

FAIRCHILD

A Schlumberger Company

See the FAST Product line in Volume I on pages 1011-1057.

1986

IC MASTER

Volume I

CONTENTS

VOLUME I

Introduction to IC MASTER	3
Advertisers' Index	8
Master Selection Guide (Function) Index	10
Part Number Index	51
Part Number Guide	300
Application Note Directory	351
Military Parts Directory	501
Testing	506
Cross Reference	508
QPL Selection Guide	518
Digital Devices	801
Abbreviations of Company Names	902
Microprocessors	1401
Selection Tables	1404
System Components	1448
International Distributors	1471
Microprocessor Development Systems	1801
Microcomputer Boards	2001
Microcomputer Support Boards	2030
Alternate Source Directory	2201
Manufacturers and Distributors Directory	2451
Advertisers' Product Index	2601

VOLUME II

Introduction to IC MASTER	2803
Advertisers' Index	2808
Abbreviations of Company Names	2810
Interface Devices	2817
International Distributors	3201
Linear Devices	3301
Memory Devices	3801
Custom/Semicustom Devices	4401
Design Automation	4901
SMD Packages	5201

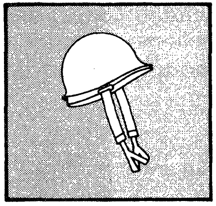

Military

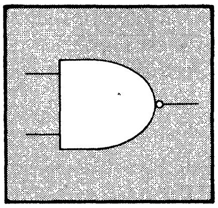

Digital

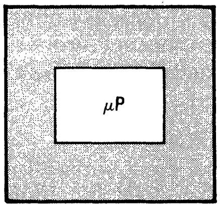

Microprocessor

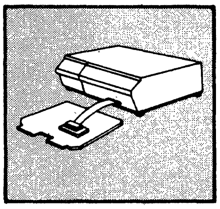

μP Development Systems

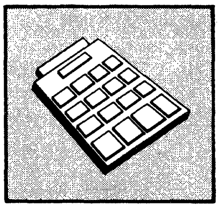

μC Boards

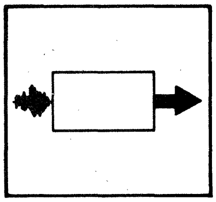

Interface

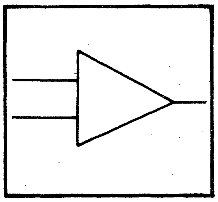

Linear

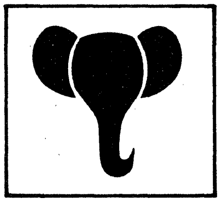

Memory

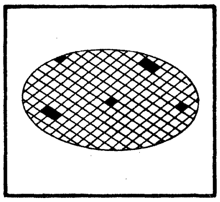

Custom/ Semicustom

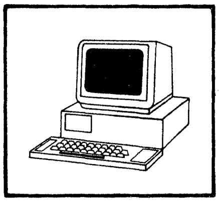

Design Automation

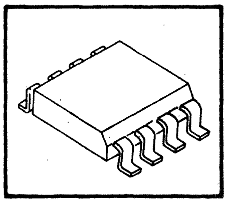

SMD Packages

1986

IC MASTER

VOLUME I

Engineering design begins with the IC MASTER

Publisher, **Brian Franklin**
Editorial Director, **Jerry Metzger**
Editor-in-Chief, **Dave Howell**
Senior Editor, **Michael Bloom**
Editorial Assistant, **Janet L. Lawrence**
Corporate Director of Manufacturing, **Dan Chillak**
Manager, Catalog Production, **Lanny Levin**
Catalog Design Director, **Michelle Arnold**
Assistant Catalog Design Director, **Bill Hennessey**
Art/Production Supervisor, **Charlotte Newman**
Art Staff, **Debra Bianculli, Marie Santonastaso, Estelle Shelfo**
Assistant Production Manager, **Brenda Buff**
Production Assistant, **Lynn Giardina**
Typography Consultant, **Don Burchell**
Group Editorial Director, **John B. Campbell**
Director of Research, **Donald R. Senter**
Corporate Director of Circulation, **Barry J. Green**
Book Sales Marketing Manager, **Georgeann Amsler**
Book Sales Manager, **Marie Botta**
Sales Billing Supervisor, **Aline Lewin**

HEARST BUSINESS COMMUNICATIONS, INC.
President, **Gordon L. Jones, Jr.**
Vice President & General Manager, **Richard C. Marshall**
Vice President, **Charles H. Townsend**
Treasurer, **Nelson J. Maione**

HEARST BUSINESS COMMUNICATIONS, INC.
East Coast:
645 Stewart Avenue
Garden City, NY 11530
Tel: (516) 227-1300
West Coast:
1333 Lawrence Expressway, Suite 115
Santa Clara, CA 95051
Tel: (408) 249-6800

IMPORTANT NOTICE
Considerable effort has been expended to make IC MASTER accurate and complete, but IC MASTER cannot assume responsibilty for inaccuracies, omissions, manufacturers' claims, or their representations. No portion of this book may be reproduced without express written permission of the publisher. © IC MASTER, solely owned by Hearst Business Communications, Inc. 1986.

A Hearst Business Publication

NEW Design Assistance You Can't Buy Anywhere Else!

The 1986 IC Master features its most significant editorial expansions, in design assistance, since its inception in 1975. This expansion directly impacts . . . **CAE/CAD technology** . . . **Custom/Semicustom** product selection . . . and **Surface Mount Device** selection.

The 1986 IC Master provides a unique system containing information that permits you to **select** the **best Custom/Semicustom chip** . . . the **best chip manufacturer** . . . and the **best electronic design tools** for a particular application-specific design. And, if you're looking for Surface Mount Devices, the IC Master permits you to easily select the appropriate device for your application from our listing of over **10,000** devices.

DESIGN AUTOMATION

Virtually **all** Custom/Semicustom IC Devices are cross referenced with **all** compatible Design Automation tools. **System profiles** are listed including both hardware (workstations, etc.) and software tools available from IC and CAE/CAD manufacturers. You can readily compare the various software tools and quickly determine their compatibility with computing hardware. An industry-wide product listing provides an extremely valuable perspective on the CAE/CAD options available to the market.

CUSTOM/SEMICUSTOM

This **newly-expanded** section provides a listing of software design tools available for Programmable Logic Devices, Gate Arrays, Standard Cells, and Linear and Linear/Digital Arrays. In addition, major macros in VLSI/LSI Macrocell Libraries are listed by source.

SURFACE MOUNT DEVICES

The **new** selection guide provides a listing of over 10,000 devices that are available by type number, package, and manufacturer. These listings direct you to manufacturers' data sheets within this section or in any of the other Master Selection Guide sections in which the appropriate data sheet might appear.

IN ADDITION . . .

You'll find **new** subsections within the traditional Master Selection guides covering Digital Signal Processors, Memory Drivers and Peripheral Drivers. All product data is grouped by application and organized and listed by type, function and key specifications in a unique editorial format that leads you to specific product information fast . . . from basic part numbers to full manufacturer's Product Data Sheets.

Selecting ICs and design aids using the IC Master is **thorough, quick** and **easy** and is guaranteed to save you valuable research hours in locating ICs, related products and manufacturers. Whatever your application needs are, **Design Automation, Custom/Semicustom, SMD, Digital, Linear, Interface, Memory** and **Military ICs, Microprocessors, MPU Development Systems, Microcomputer Boards,** your design assistance is contained in one source . . . the 1986 IC Master.

IMPORTANT FEATURES OF YOUR IC MASTER

ONE COMPLETE SOURCE . . .

The IC MASTER is the original and only complete guide to currently available integrated circuits, microcomputer boards, development systems, gate arrays, design automation software and hardware, custom/semicustom ICs and design tools, surface mount packages, and other related components of concern to the design engineer. It has become the first place to look in the critical selection of ICs, boards, systems and equipment. If only one device can fit the requirements of a new design or if hundreds are available, the user can find out in seconds by referring to the IC MASTER.

EASY TO USE . . .

THE IC MASTER and quarterly supplemental IC UPDATES save time. No longer does the user have to spend long, tedious hours and days searching through manufacturers' catalogs and data sheets for information. The IC MASTER and IC UPDATES put at the user's fingertips an easy way to narrow his IC choices quickly, accurately, and systematically with the confidence that he has just surveyed the entire industry.

ADVERTISERS INDEX

Lists alphabetically by company and section the technical data provided by key companies. Use this index to find information on important products when appropriate suppliers are known.

PAGE 8

MASTER SELECTION GUIDE (Function) INDEX

Indexes functions, key words and topics leading to the *beginning* of the sections where these are found. Use this guide to find quickly not only specific products but also related devices, equipment and software.

PAGE 10

PART NUMBER INDEX

Covers the Master Selection Guide, Application Notes, and, in **Bold Face**, Manufacturer supplied Data pages. Arranged by base part numbers (ignoring letter prefixes and suffixes) so that generic and similarly numbered devices from different manufacturers, though not necessarily alternate sources, are grouped together. Entirely alphabetic titles and model names are placed at the beginning. Use this index to locate key operational characteristics, application notes and device data when you have a device number or model name. You can also use it to search for similar parts and to find related functions when you have the number of a device that approximates the function you require.

PAGE 51

PART NUMBER/ LOGO GUIDE

Describes each manufacturer's part number system and method of identifying products. It defines device number prefixes and suffixes as well as depicts logos. JAN nomenclature and PRO-ELECTRON numbers are covered. Use this guide to decode model numbers and to read device logos to identify the manufacturers.

PAGE 300

APPLICATION NOTE DIRECTORY

Provides a comprehensive guide to many IC and IC-related application notes. Organized by topics, with a topic index at the beginning of the section, so that information can be located quickly. If you wish to locate all application notes for a specific device number, refer to the Part Number Index which in turn will direct you to the applicable notes within this section.

PAGE 351

MILITARY PARTS DIRECTORY

Includes a table of manufacturers willing to perform MIL-STD-883 screening, two-way tables between military (slash) numbers and commercial devices, and a functional breakdown of devices on the QPL parts list. Manufacturer's data in this section provides supplemental information on military topics. Refer to this section when seeking military and military-related devices.

PAGE 501

MASTER SELECTION GUIDE— DIGITAL DEVICES

Provides information for making initial product selections. Digital devices are listed by major families (CMOS, ECL. GaAs, TTL) and within those families by functional groups (arithmetic, buffers, gates–AND, etc.) These listings lead to the additional, key-product, data pages provided by the manufacturers. Use these pages to find digital devices, complementary devices, and alternatives.

PAGE 801

MASTER SELECTION GUIDE— MICROPROCESSOR

Provides specific information on microprocessors, followed by microprocessor families, and then more generic microprocessor system peripherals. Use these pages supplemented by the data pages for system overviews and product selections.

PAGE 1401

MASTER SELECTION GUIDE— µP DEVELOPMENT SYSTEMS

Describes the tools used in developing software programs for microprocessors. Use these pages when seeking anything from simple, single-user systems to multi-user computers devoted to software development.

PAGE 1801

MASTER SELECTION GUIDE— MICROCOMPUTER BOARDS

Covers microcomputer boards followed by support boards. The material is grouped by the system buses. Use these pages when exploring µC board performance, looking for complementary boards, and to locate appropriate sources.

PAGE 2001

ALTERNATE SOURCE DIRECTORY

Provides an industry-wide cross reference of those devices which the manufacturers claim are pin-for-pin, functional equivalents to IC's made by other firms. Includes many alternates not implied by their model numbers, particularly linear and memory devices. Simply look up the manufacturer and device number to find various alternate sources. Use this directory whenever you need to determine multiple sources.

PAGE 2201

MANUFACTURERS AND DISTRIBUTORS DIRECTORY

Serves as a comprehensive telephone directory of the IC industry. Includes the manufacturer's addresses and international sales offices, reps and distributors. To support manufacturers' data pages it also includes domestic sales offices, representatives and distributors. Use this directory for establishing contact with the sales locations.

PAGE 2451

ADVERTISERS PRODUCT INDEX

Indexes both the general information and specific product data provided by the manufacturers placing detailed technical data in IC Master. Use these page references to lead to the Master Selection Guide entries, to application notes and particularly to the important product data (**Bold Face**).

PAGE 2601

THE 1986 IC MASTER

The Engineers

The whole world does indeed follow the IC MASTER when it comes to finding complete data concerning integrated circuits on the market today. This all-in-one-source saves you both time and money. There's no need for desperate group searches, or for hours of tedious examinations of various catalogs and data sheets.

This is your guide to using the IC MASTER. Typical problems have been posed to show you how simple it is to find all your IC answers—in one place!

Who makes a 16384x1 static RAM with an access time of 70ns or faster? And what are my technology choices?

First look up Memory, RAMs, Static, in the Master Selection Guide Function Index near the beginning of Volume I. This will lead you to the Memory section, which provides initial selection information and data on PROMs, RAMs, ROMs and other memory devices. More specifically it will lead you to the beginning of the Static RAM section, where you will find the devices listed by organization (word and bits/word) and within that, by access times.

Look up 16384x1 and 70ns. You will find that you can select NMOS, CMOS, or at significantly faster speeds, ECL. You will also find additional information on output type, supply voltage, and number of pins as well as manufacturers' part numbers and names. Thus it is a simple process to reduce your device choices to just a few based on key parameters.

Your next step would be to study the product selections from hundreds of pages of engineering data provided directly by the manufacturers. The bold face listings lead you to that data wherever it is in the Master.

See Volume II

Memory selection is easy with the IC Master.

My company is interested in microprocessors. Where do I start?

With IC Master in hand, just turn to the Master Selection Guide Function Index. There, under the heading Microprocessors, you will find several choices of CPUs, System Components, Peripheral Controllers and General Purpose Circuits, as well as CPU Boards. Assuming you want to review CPUs, turn to the page listed where you will find key parameters and be able to narrow down your selection to a range of products that will fulfill your major requirements.

Then you can turn to the Microprocessor System Components to find complementary devices and peripherals specifically designed to go with these CPUs. And you can turn to the Peripheral Controller and General Purpose circuits to find other related devices. An advantage of this system is that you can quickly find related components and features without knowing specific titles or even knowing exactly what words or functions to ask for.

Once you have made some preliminary choices, your next step will be to study these selections from the many pages of up-to-date engineering data provided directly by the manufacturers.

See Volume I

With IC MASTER, Microprocessor selection is easy.

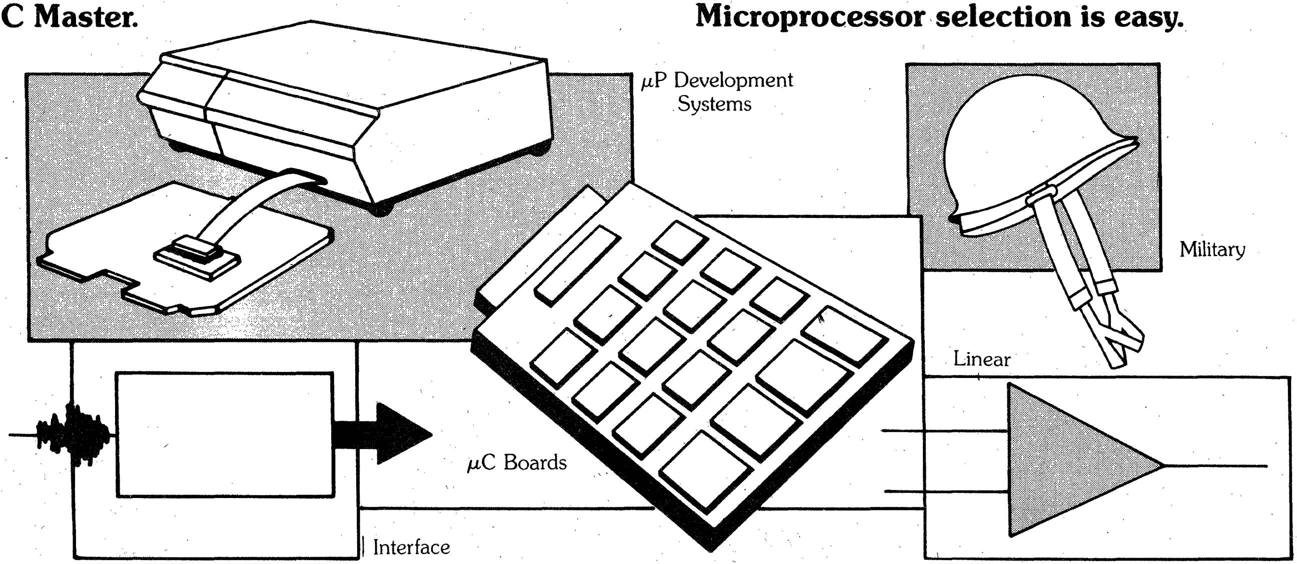

First Step in IC Selection

Who makes a Dual, Low Offset Voltage OpAmp?

The Master Selection Guide-Linear covers linear ICs by product categories such as Amplifiers, Special Purpose; Operational Amplifiers; Timers; Voltage Regulators, etc. So you can simply look up Operational Amplifiers, Dual Units and find they are listed by offset voltage. Now you can define "low offset" based on what is available. Or maybe balance offset against bias current. As in other sections, when numeric parameters are important, you gain the flexibility to review trade-offs.

See Volume II

With IC MASTER, Linear selection is easy.

I need an IC that has Music capability, but I don't know which Master Selection Guide to turn to.

When there is any doubt as to which Master Selection Guide covers a particular type of device, the first place to look is in the extensive Master Selection Guide Function Index. This index serves as a cross reference between IC functions and the specific Master Selection Guide where devices performing these functions can be found.

For example, if you looked up MUSIC circuits in the Master Selection Guide Function Index you would be directed to several subheadings in the Consumer Circuits portions of the Master Selection Guide.

See Volume I

Identifying an IC by function is easy with the IC MASTER.

I want to use a digital gate array or some other semicustom device in my next project. How do I find what's available . . . and who manufactures it?

The Custom/Semicustom Master Selection Guide describes such products and services. Design and selection data for digital gate arrays, linear and digital arrays, standard cells, programmable logic and applicable tools are listed here. Interrelationships covering the devices and manufacturers' capabilities as well as the design tools for use by OEM engineers and system designers are shown. The first guide lists custom capabilities. Subsequent guides cover devices and tools; with each device category followed by the specific tools which can be applied. In the case of tools you can also study the information provided in the Design Automation Master Selection Guide.

An important feature of this section is the VLSI/LSI Macrocell Library Directory. Since each gate array and standard cell company normally offers a general library of 74XXX series functions, this directory lists just the larger macro cells. It points out capabilities that tend to differentiate companies.

To answer the question, start with Digital Gate Array section which arranges devices according to manufacturer and then performance, such as gate delay and toggle frequency, as well as technology and number of equivalent 2-input gates. Then review the manufacturer provided information for this option and the other semicustom options.

See Volume II

Finding the right vendor for Custom/Semicustom is easier with the IC MASTER.

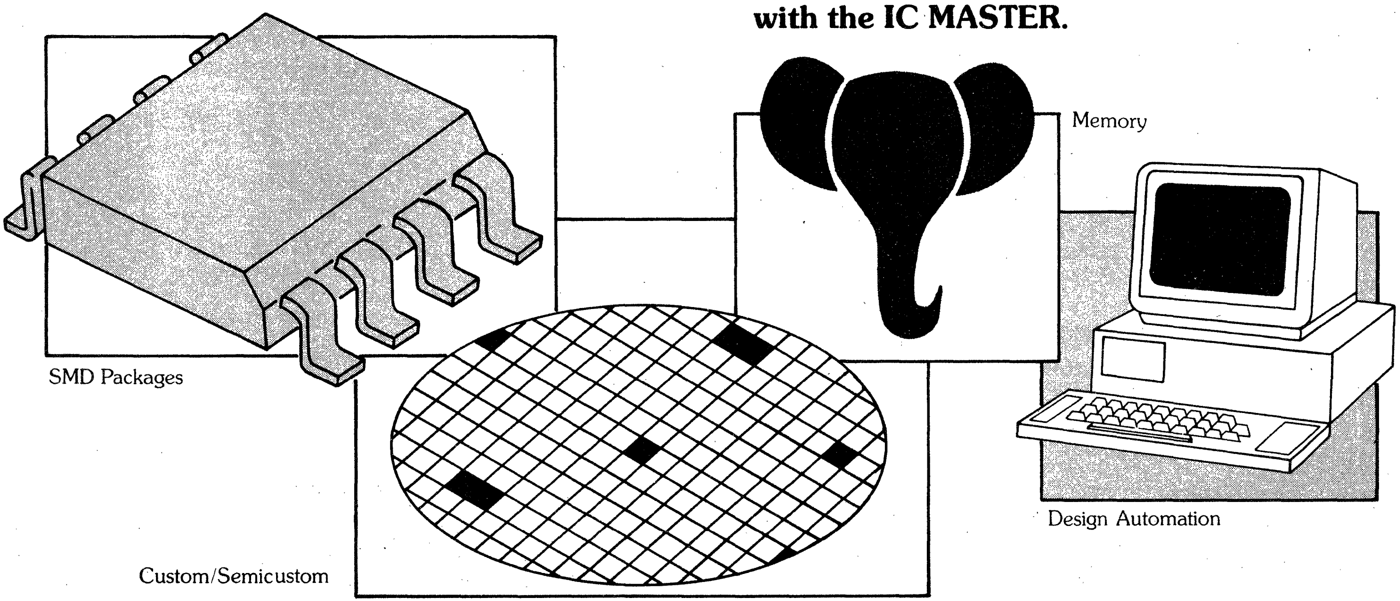

Ways to Use IC Master

I have a Mentor Graphics "Idea" workstation. What front end design tool(s) is compatible with my workstation to provide "Logic Simulation," what capability will it provide and who manufactures it?

Start with the Design Automation Selection Guide first. This section provides sufficient information for making initial hardware and software selections by furnishing a number of interrelated directories complemented by manufacturers' data.

To locate tools incorporating software, hardware and a computing platform from one company, start with the Workstation Directory, which lists the design tools by name. For third-party software, which is not sold with the system, refer to the Design Tool interface Directory which shows the hardware-software linkages. If you are searching for suitable tools to run on a given computing platform, consult the Hardware vs. Software Directory. Or if you need tools to do your own semicustom design, use this material in conjunction with the directories in the Custom/Semicustom section.

See Volume II

Selecting the proper workstation, software, and hardware for your application is fast and easy with the IC MASTER.

I know the digital IC I need is available, but is it available in a surface mount package?

See the Surface Mount Directory. It lists which devices are available in surface mount packages, along with the package types and sources. The products are sequenced by base-number so that you can readily identify multiple sources.

Manufacturer-supplied technical data on surface mounting follows the base-number list. Page number references leading to this data and to specific device data pages throughout IC Master are included where appropriate.

See Volume II

Finding a surface mountable device is *Easy* and *Fast* with the IC MASTER.

I need a JAN Voltage Regulator. Does anyone make one?

The Military Parts Directory in the IC MASTER provides a table of manufacturers willing to perform MIL-STD-883 screening. It also contains a bidirectional M38510 to commercial cross-reference index.

In addition you can quickly determine by device function what parts are JAN qualified. The Military Parts QPL Selection first takes the current QPL List, organizes it by function and then identifies each device by manufacturer and the 38510 slash number.

If you're a military part specifier or buyer, you will find this section invaluable.

See Volume I, JAN Voltage Regulators are there.

Military part selection is easy with the IC MASTER.

I know the basic part number is 2502 and that's all. Where do I look?

In the Part Number Index all of the prefixes and suffixes have been stripped away to leave only the base, or function, number. These are arranged in alphanumeric sequence. Starting with the first digit you can find every base number. One might be a Linear device; one might be a Memory device. The line and page numbers listed for each device show where it is located in the appropriate Master Selection Guide section. This listing simplifies part identification and part location. Also it groups any reference to application notes, eliminating the guesswork as to which manufacturer publishes application notes on a particular device.

See Volume I

IC MASTER gives you a complete numeric parts listing at your fingertips.

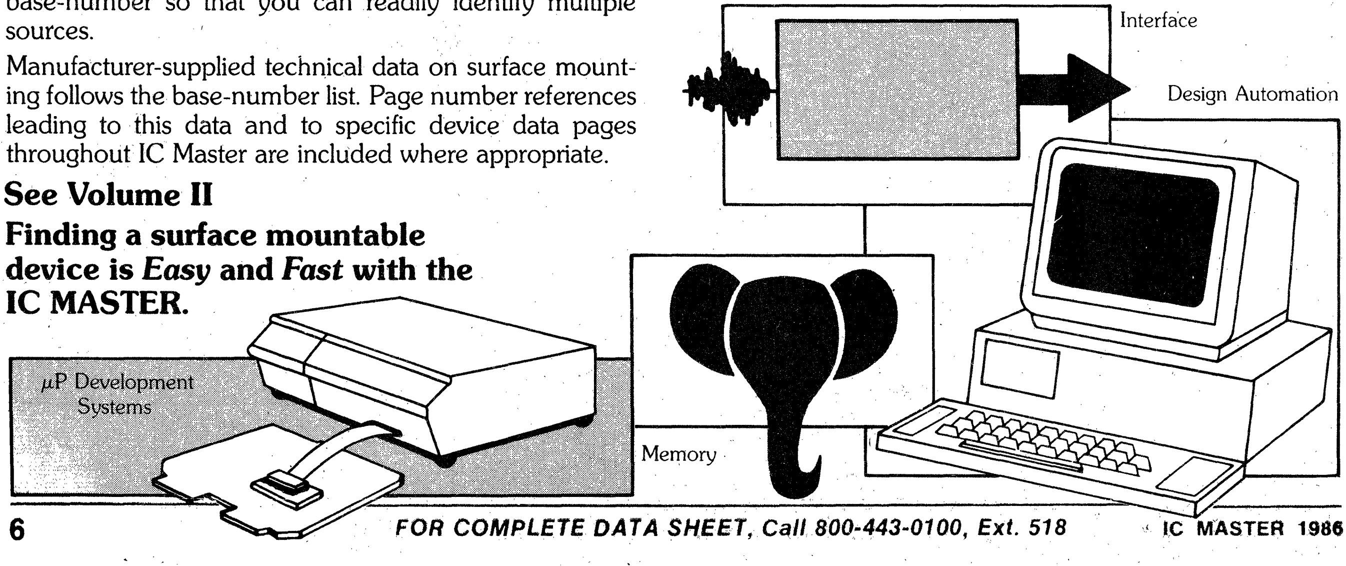

Ways to Use IC Master

How many companies claim to be pin-for-pin, function-for-function compatible with the Intel 8259, and who are they?

The Alternate Source Directory is the most comprehensive industry-wide reference ever published. It lists more than 65,000 direct replacement parts. Unlike usual manufacturer's alternate source guides, this pin-for-pin directory lists numerous alternate sources for a particular device, not just one.

For example, if you are looking for an alternate source to an 8259, you would find a half dozen pin-for-pin replacements listed.

See Volume I

IC MASTER—a total resource library in one volume

What application notes are available on AM-FM radios?

The Application Note Directory is as complete a listing of Application Notes as you'll find anywhere. You'll see application notes on how to design specific circuits, how to maximize performance, how ICs function, plus specific system designs. The Directory lists the devices covered, describes each note, tells who publishes each one and where to get it.

See Volume I

Finding the latest Application Notes is easy with the IC MASTER.

What is the description, temperature range and package type of the Signetics N8X02N?

Fully identifying a part by its number is simple thanks to the IC MASTER Part Number Guide. This guide describes each manufacturer's system of device number prefixes and suffixes. Knowing these will help you decide the type of package, temperature range, pin configuration and other information manufacturers built into the individual coding systems. Part understanding, identification, and ordering instantly become easier.

See Volume I

Decoding a manufacturer's part number code is easy with the IC MASTER.

Now that I've selected the IC's I want to evaluate, where can I get them . . . now?

The Manufacturers and Distributors Directory lists in one convenient section the manufacturer's address, telephone number, who to talk to, plus the sales offices, representatives and distributors, both international and domestic.

See Volume I

Reaching the manufacturer and distributor is easy with the IC MASTER.

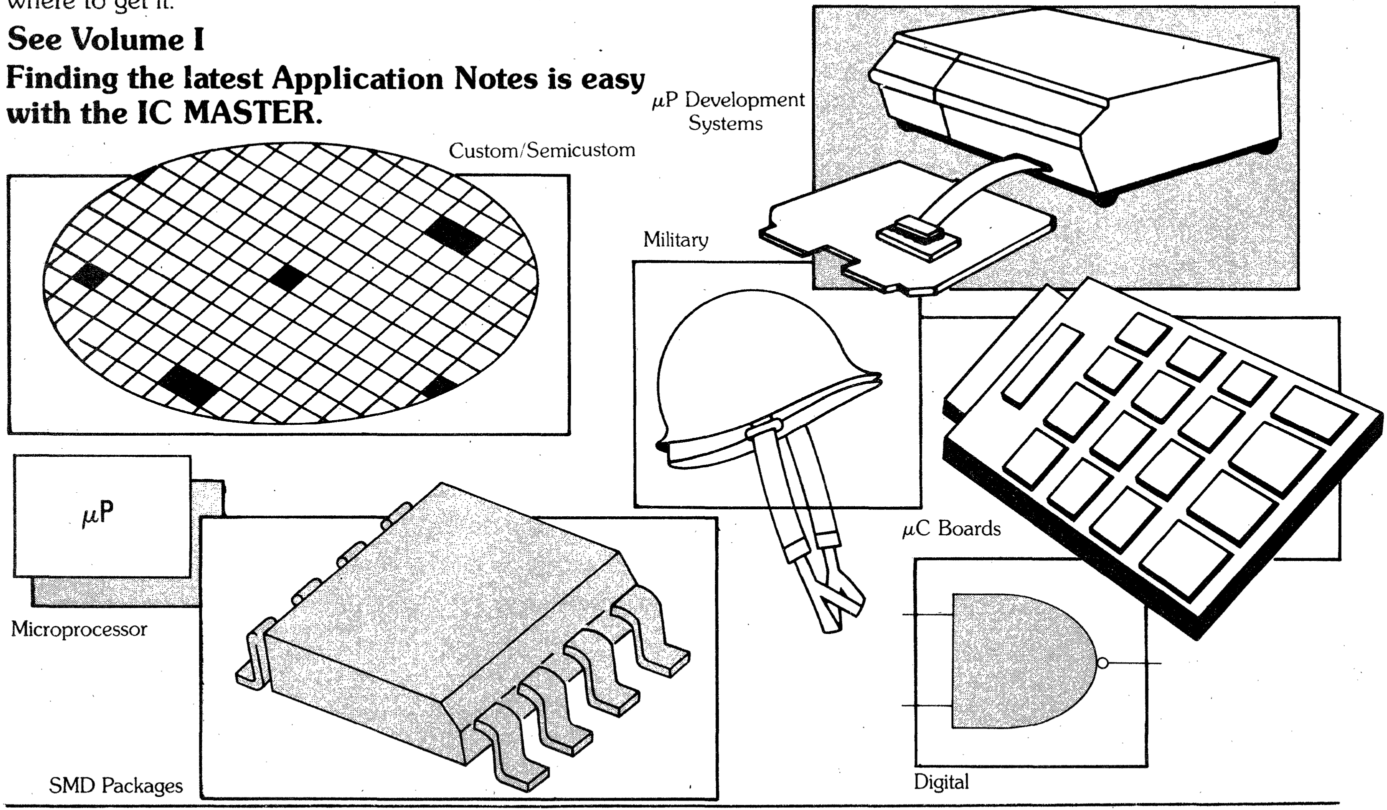

ADVERTISERS INDEX

American Automation
Microprocessor Development Systems 1901
American Computer Automated Systems Inc.
Design Automation 5101
Analog Devices
Digital 1002-1008
Interface 3102-3145
Linear 3502-3524
Apex Microtechnology
Linear 3525
Applied Micro Circuits
Custom/Semicustom 4602-4603
AT&T
Microprocessor 1602-1603
Burr Brown
Interface 3146-3154
Cadnetix
Design Automation 5102-5103
CAECO
Design Automation 5105
California Devices
Custom/Semicustom 4605-4614
Case Technology
Design Automation 5106-5107
Chips & Technology
Microprocessor 1604-1605
Circuit Technology Inc.
Military 601
Digital 1009
Interface 3155
Linear 3526-3532
Memory 4001
Cypress Semiconductor
Memory 4002-4007
Daisy Systems
Design Automation 5108
Data I/O
Design Automation 5109
Datel
Interface 3157-3163
Dense-Pac
Memory 4008-4009
Diplomat
Manufacturers & Distributors Directory
EG & G Reticon
Interface 3165
Linear 3533-3535
Elantec
Linear 3537-3543
Electrical Engineering Software
Design Automation 5110
Exar
Linear 3544-3566
Custom/Semicustom 4615-4620
Surface Mount Devices 5301-5303
Fairchild
Military 603-623
Digital 1011-1061
Microprocessor 1607-1610
Microcomputer Boards 2101
Linear 3567-3578
Memory 4011-4015
Custom/Semicustom 4621-4623
Surface Mount Devices 5304-5311
Fujitsu America
Microcomputer Boards 2102-2107
Memory 4016-4017
Fujitsu Microelectronics
Microprocessor 1611
Memory 4019-4021
Custom/Semicustom 4624-4625
GE Semiconductor
Custom/Semicustom 4626-4630
Gigabit Logic
Digital 1063-1065
Goldstar Semiconductor
Digital 1066-1067
Microprocessor 1612
Linear 3580-3581
Memory 4022
Gould AMI
Microprocessor 1613
Interface 3166-3169
Linear 3582-3593
Memory 4023
Custom/Semicustom 4632-4651
GTE Microcircuits
Microprocessor 1615-1617
Linear 3594
Harris
Military 624-682
Digital 1068-1077
Microprocessor 1618-1631
Interface 3170-3194
Linear 3595-3597
Memory 4024-4030
Custom/Semicustom 4652-4660
Hi-Level Technology
Microprocessor Development Systems 1902
Hitachi America
Microprocessor 1632-1635
Memory 4032-4039
Holt Inc.
Custom/Semicustom 4662-4663
Honeywell—See **Signal Processing Technologies**
Hughes Aircraft
Military 683
Inmos
Military 685-687
Microprocessor 1636-1637

Microprocessor Development Systems 1903
Interface 3195
Memory 4040-4045

Integrated Circuits Inc.
Memory 4031

Integrated Device Technology
Digital 1078-1088
Microprocessor 1638-1644
Memory 4046-4066

Integrated Logic Systems, Inc.
Custom/Semicustom 4664
Design Automation 5111

Integrated Power Semiconductors
Linear 3599

Intel
Memory 4067-4084
Custom/Semicustom 4665

Intersil
Digital 1089-1091
Microprocessor 1645
Interface 3196-3200
Linear 3600-3604

Lattice Semiconductor
Digital 1092-1098
Memory 4085-4099
Custom/Semicustom 4666-4673

LMS Electronics
Memory 4100

LSI Computer
Digital 1099
Custom/Semicustom 4675

LSI Logic
Custom/Semicustom 4676-4677

Meta Software
Design Automation 5112

Micro Networks
Interface 3202-3205

Micro Power Systems
Military 688
Interface 3206-3208
Linear 3605-3607
Custom/Semicustom 4678-4679

Micro-Rel
Custom/Semicustom 4680

Monolithic Memories Inc.
Military 689-692
Digital 1100-1119
Memory 4101-4112
Custom/Semicustom 4681-4713

Mostek
Military 694-695
Microprocessor 1647-1653
Linear 3608-3611
Memory 4114-4117
Custom/Semicustom 4715-4717

Motorola Semiconductor
Military 696-699
Digital 1120-1132
Microprocessor 1654-1669
Microprocessor Development Systems 1904-1907
Microcomputer Boards 2108-2117
Interface 3209-3212
Linear 3612-3633
Memory 4118-4125
Custom/Semicustom 4718-4721
Surface Mount Devices 5312-5313

MP Systems
Manufacturers & Distributors Directory

NCR Microelectronics
Digital 1134-1135
Microprocessor 1671-1672
Interface 3214-3215
Memory 4127-4130
Custom/Semicustom 4722-4731

OKI Semiconductor
Custom/Semicustom 4732-4733

Orion Instruments
Microprocessor Development Sys. 1908

Panasonic
Digital 1136-1143

Panatech Semiconductor
Memory 4132-4133
Custom/Semicustom 4734-4739

Precision Monolithics
Linear 3635-3641

Raytheon
Military 700-701
Linear 3642-3669
Memory 4134-4139
Custom/Semicustom 4740-4741

RCA Solid State
Military 702-705
Digital 1144-1152
Microprocessor 1673-1679
Interface 3216-3219
Linear 3671-3678
Custom/Semicustom 4742-4745

Samsung Semiconductor
Digital 1153-1154
Interface 3220
Linear 3679
Memory 4140-4141
Custom/Semicustom 4746

SEEQ Technology
Memory 4142-4151

Signal Processing Technologies (Honeywell)
Linear 3680-3683

Signetics
Digital 1155-1210
Microprocessor 1681-1749
Interface 3221
Linear 3685-3734
Memory 4153-4175
Custom/Semicustom 4747-4750
Surface Mount Devices 5315-5317

Silicon Solutions
Design Automation 5113

Silicon Systems
Linear 3736-3737
Custom/Semicustom 4751

Siliconix
Interface 3222-3265

S-MOS Systems
Memory 4176-4179
Custom/Semicustom 4752-4753

Sprague Electric
Interface 3267-3269

Tektronix
Custom/Semicustom 4755-4758
Design Automation 5114-5117

Texas Instruments
Military 707-732
Digital 1211-1362
Memory 4180-4262
Custom/Semicustom 4759-4798

Thomson CSF Semiconductor
Linear 3738

Toshiba America
Digital 1363-1366
Microprocessor 1750
Memory 4263
Custom/Semicustom 4799

Triquint (Tektronix)
Custom/Semicustom 4801

Unicorn Microelectronics
Custom/Semicustom 4802-4803

Unitrode Integrated Circuits
Linear 3739-3741

Vatic Systems
Custom/Semicustom 4804

VLSI Technology
Microprocessor 1751-1771
Memory 4265-4274
Custom/Semicustom 4805-4813
Design Automation 5118-5119

VTC Inc.
Digital 1367-1376
Interface 3270
Linear 3742
Custom/Semicustom 4815-4822

Wintek Corporation
Microcomputer Boards 2118

Xicor
Military 734-739
Memory 4276-4289

Zilog
Microprocessor 1773-1776

Zycad
Design Automation 5120-5122

MASTER SELECTION GUIDE INDEX

(Guide to Product Categories)

When you know the desired function and need specific devices that perform this function, use this Index first. It is organized by functions and by key words. It leads to the beginning of the section containing not only the specified topic but also related devices.

Master Selection Guide	Starts on Page No.
Military	501
Digital	801
Microprocessor	1401
Microprocessor Development Systems	1801
Microcomputer Boards	2001
Interface	2817
Linear	3301
Memory	3801
Custom/Semicustom	4401
Design Automation	4901
Surface Mount Directory	5201

HOW TO USE THE MASTER SELECTION GUIDES

These guides provide sufficient information to help the engineer make an initial product selection, or to lead him to a group of device numbers and their manufacturers. They make it possible to find the products most likely to satisfy the needs of a particular application. All devices that appear in a selection guide are included in the Part Number Index. If the part number for a device is known by the reader, by referring to the Part Number Index, he can see the page and line number for data on that device. If the manufacturer of the device has included a data sheet in IC MASTER with supplementary data, the location of this data sheet is also listed.

All integrated circuits intended for consumer applications (such as calculator chips, TV game chips and music circuits are combined under one heading for the reader's convenience: Linear-Consumer Circuits. The TTL major families, TTL, TTL-AS, TTL-ALS, TTL-LS, TTL-F, TTL-H and TTL-S, have been combined to facilitate function comparisons. The Microprocessor section includes, in addition to system selection charts, microprocessor system components grouped under the microprocessor type for which they are suited. The Microcomputer Board section groups boards in sequence by data word size and then according to the system bus on which they are based. It also includes an extensive listing of support boards arranged according to the supported system or bus.

Microprocessor Development Systems are sequenced alphabetically by manufacturer and then described by specific performance parameters.

MSG FUNCTION INDEX

Function			Page-Line
A			
A/D	See ADC listings		
A Law			3377-1
Accelerators	Circuit Simulation		4975-2
	Fault Simulation		4975-2
	Logic Simulation		4975-2
Accompaniment	Music		3320-137
Accumulator	See Arithmetic Function listings		
ACIA	Interface	Transmitters-Receivers	2900-1
Adapter	Manchester	See Manchester listings	
ADC	Binary		2832-2
	Companding		3377-1
	Consumer		3316-60
	Data Acquisition System		3398-1
	Decimal		2848-1
	DSP		4975-2
	Microprocessor	6500	1453-26
	Quantizer		3398-1
	Video		4975-2
ADCCP	Interface	Transmitters-Receivers	2900-1
Adder	Digital	CMOS	806-1
		DSP	4975-2
		ECL 10K	845-1
		ECL 100K	848-59
		TTL	854-1
ADLC	Interface	Transmitters-Receivers	2900-1
ADPCM			3323-97
AFT	TV		3324-45
AGC	Amplifier		3306-1
	FM		3321-119
	Recorder		3323-150
	TV		3324-45
Air Flow Sensor			3398-1
Alarm Circuits	General		3398-1
	Intrusion		3327-127
Alarm Clock	See Clock listings		3320-48
ALC	Recorder		3323-150
Alternate Sources	See Alternate Source Directory		
Alternator Voltage Regulator	Automotive		3319-109

Function			Page-Line
ALU	Digital	CMOS	806-1
		ECL 10K	845-1
		ECL 100K	848-59
		TTL	854-1
Amplifier	AC		4975-2
	Instrumentation		4975-2
	Switched Input		4975-2
	Temperature Controlled		4975-2
	TV Synthesizer		4975-2
	Winchester		4975-2
Amplifiers	AGC		3306-1
	Antilog		3306-1
	Audio		3306-1 3316-60
	Cassette Recorder		3323-150
	CATV		3324-45
	Coscode		3306-1
	Current		3306-1
		Followers	3329-1
	Darlington		3309-1
	Differential		3306-1 3309-1
	Disk Memory		3306-1
	Fiber Optic		3306-1
	Floppy Disk		3306-1
	Followers		3329-1
	Head	Video Recorder	3324-40
	Headphone		3316-60
	Hearing Aid		3316-60
	IF	AM	3321-15
		AM/FM	3321-59
		FM	3321-119
		General	3306-1
		TV	3324-45
	Instrumentation		3306-1 3335-1 3357-183
	IR		3322-153
	Isolation		3306-1
	Log		3306-1
	Magnetic Tape		3306-1
	MATV		3324-45
	Microphone		3306-1 3323-150 3377-1
	Mixer		3306-1

Function			Page-Line
A			**(Cont'd)**
Amplifiers			
	Operational		
		See Operational Amplifier listings	
	Power		3306-1
			3316-60
		Auto	3319-109
	Preamplifier		3306-1
			3316-60
	Programmable Gain		3306-1
	Read		3306-1
	Recorder		3316-60
	Remote Control		3306-1
			3322-153
	RF		3306-1
	Sense		2899-1
	Single Ended		3306-1
	Special Purpose		3306-1
	Telephone		3377-1
	Thermocouple		3306-1
	Transconductance		3306-1
			3357-183
			3369-2
	Transimpedance		3306-1
	Video		3306-1
	Voltage Controlled		3306-1
		Consumer	3320-137
	Voltage Variable Gain		3398-1
	Wideband		3306-1
	with Comparator		3306-1
	with Photodiode		4975-2
Analog Shift Register			3398-1
Analog Signal Processor			3398-1
Analog Switches			
	See Switches		
Analog to Digital Converters			
	Binary		2832-2
	Decimal		2848-1
	See ADC		
AND Gate			
	See Gate listings		
Apple	Support Boards		4975-2
Appliance Timer			
	Consumer		3327-127
ARINC 429			
	Digital	CMOS	837-46
	Interface		
		Line Drivers	2883-17
	Receiver/Transmitter		2900-1

Function			Page-Line
Arithmetic			
	Floating Point		
		DSP	4975-2
		General	1469-42
		Microprocessor, Z800	1461-21
		Microprocessor, 16000	1463-100
			1464-81
			1462-86;1464-81
		Microprocessor, 32	1465-8
		Microprocessor, 32000	4975-2
		Microprocessor, 6800	1453-142
		Microprocessor, 68000	1463-109
		Microprocessor, 8080	1457-60
		Microprocessor, 9440	1463-93
	Microprocessor		
		8000	1463-6
		8086	1461-58
		8088	4975-2
Arithmetic Functions			
	CMOS		806-1
	DSP		4975-2
	ECL 10K		845-1
	ECL 100K		848-59
	HNIL/HTL		852-1
	Special		890-1
	TTL		854-1
Arithmetic Game			1469-42
Arithmetic Logic Unit			
	See ALU		
Arithmetic Processor			
	General		
		See Processor, Arithmetic listings	
ARI-DK			3398-1
Arrays	Diode		3311-39
	GaAs		851-17
	Gate		4439-1
	Linear		4462-1
	Linear/Digital		4462-1
	Programmable Logic		4467-1
	Special Purpose		3311-39
	Standard Cells		4478-1
	Switched Capacitor		3398-1
	Transistor		3309-1
ASCII	Code Converters		3808-25
ASTRO	Interface		
		Transmitters-Receivers	2900-1
Asynchronous Communications			2900-1
Attenuators			
	Digital	Consumer	3316-60
	Digital Control		3398-1

Function			Page-Line
A			**(Cont'd)**
Attenuators	Electronic	Consumer	3320-137
Audio	See Consumer Circuits		
Automotive Circuits			3319-109
B			
Balanced	Mixer		3398-1
	Modulator/Demodulator		3398-1
Bar Code Processor			4975-2
Bargraph	Display Drivers		2874-1
	TV		4975-2
Barrel Shifter	Digital	DSP	4975-2
		TTL	854-1
BASIC, Tiny			1456-2
Battery Backup Circuit			4975-2
Battery Charger	Automotive		4975-2
Battery Indicator	Low Level		3398-1
Baud Rate Generator	Digital	Special	890-1
	Interface		2900-1
Bell 103	Linear	Telecom	3377-1
Bell 108	Linear	Telecom	4975-2
Bell 113	Linear	Telecom	3377-1
Bell 201	Linear	Telecom	4975-2
Bell 202	Linear	Telecom	3377-1
Bell 208	Linear	Telecom	4975-2
Bell 209	Linear	Telecom	4975-2
Bell 212	Linear	Telecom	3377-1
Bilingual Processor	TV		3324-45
Binary	Code Converters		3808-25
BiSync	Microprocessor	2650	1452-119
		8080	4975-2
Bit Rate Generator	Digital	CMOS	837-46
Bit Slice			4975-2
			1448-1

Function			Page-Line
Bi-Phase	Interface	Transmitters-Receivers	2900-1
Boards	Microcomputer		2005-1
	Support	See Microcomputer Board listings	
BOART	Interface	Transmitters-Receivers	2900-1
Boosters	Current	Amplifiers	3306-1
		Followers	3329-1
Bounce Eliminator	Digital	CMOS	837-46
Bubble Memory	Control Circuits		2892-1
	Controller		1465-23
	Driver		2892-1
	Interface Circuits		2892-1
	Storage Devices		3826-3
Bucket Brigade	Analog		3398-1
Buffers	CMOS		808-64
	Digital	Double Row	1465-23
		See Gate listings	
	ECL 10K		845-37
	ECL 100K		848-68
	GaAs		851-1
	High Current	See Driver listings	
	High Power		2894-1
	HNIL/HTL		852-3
	Linear		3329-1
	TTL		856-81
	Various	See Driver listings	
Burst Error Processor	General		2878-1
			1469-42
	Microprocessor, 8000		1463-6
Bus	Arbitration Module		1465-23
	Extender	TTL	4975-2
	IEEE-488		1465-23
	Interface	Microprocessor, PPS-4/PPS-8	
	See line Circuit listings		
	Transfer Switch	TTL	4975-2
Buscon			4975-2
BySync	Microprocessor	9900	4975-2

Function			Page-Line
C			
Calculator Circuits			3320-1
CAM	See Memory listings		
Camera	Circuits		3320-11
	Traffic		3324-45
	TV		3324-45
Carrier Current			4975-2
Cassette	See Tape Deck Circuits		
Cassette Controller	See Controllers		
CATV			3324-45
CB Radio			3320-40
			3375-1
CCITT Protocol Controller			1465-23
CCITT R2B			4975-2
CCITT R2F			4975-2
CCITT V.21	Linear	Telecom	3377-1
CCITT V.22	Linear	Telecom	3377-1
CCITT V.23	Linear	Telecom	3377-1
CCITT V.24	Interface	Line Drivers	2881-1
CCITT V.26	Interface	Line Drivers	2881-1
	Linear	Telecom	3377-1
CCITT V.27	Linear	Telecom	4975-2
CCITT V.28	Interface	Line Drivers	2881-1
CCITT V.29	Linear	Telecom	4975-2
CCITT X.25	Interface	Transmitters-Receivers	2900-1
Cell Library	Standard Cells		4975-2
	VLSI/LSI Macrocells		4975-2
Cellular Radio	Receivers		4975-2
Channel Circuits	TV		3324-45
Channel Selector	CB Radio		3320-40
Character Generators			3808-1
Chimes			3327-127
Chroma Circuits	TV		3324-45

Function			Page-Line
CIMbus			4975-2
Ciphering	See Data Encryption listings		4975-2
Click Suppressor	Telephone		3377-1
Clock	Alarm		3320-48
	Automotive		3320-48
			3319-109
	General		3320-48
	Melody Circuits		3320-48
	Microcomputer		1469-42
	Microprocessor	Real-Time	1451-101
			1469-42
		6800	1453-142
	Oscillators/Dividers		4975-2
Code Converters			3808-25
Code Identification System	Digital	CMOS	837-46
Codecs	DSP		4975-2
	Telecom		3377-1
Color Processor	TV		3327-109
Communications	Two-Wire Bidirectional		3398-1
Compact Disk	Audio		4975-2
Companding ADC			3377-1
Companding DAC			4975-2
			3377-1
Compandor	Tape Recorder	Audio	3323-150
		Video	4975-2
	Telephone		3377-1
Comparator/Multiplexer	Digital	Special	890-1
Comparators	Address		4975-2
	Cache Address		876-130
			3398-1
	Chain Data		3398-1
	Data		3398-1
	Digital	ECL 10K	845-1
		ECL 100K	4975-2
			848-59
		HNIL/HTL	852-1
		TTL	854-1
	Equal to	Microprocessor, 2900	1448-42
		Microprocessor, 8000	1463-6
	Equality		806-1

MSG FUNCTION INDEX

Function			Page-Line
C			**(Cont'd)**
Comparators			
	Hi/Low		3398-1
	Identity		
		TTL	854-1
	Linear	Dual	3313-29
		Hex	
		PLLs	3375-1
		Quad	3315-22
		Single	3312-1
	Linear-Digital		886-148
	Magnitude		
		CMOS	806-1
		TTL	854-1
	Opto-coupled		3306-1
	Phase	Digital, CMOS	837-46
		Linear	3375-1
	Programmable		3398-1
	String Proximity		4975-2
			4975-2
	Window		3398-1
Computer			
	String Proximity		4975-2
			4975-2
Computer Board			
	See Microcomputer Board listings		
Conditioner			
	LVDT Signals		3398-1
Constant Current Source			3398-1
Consumer Circuits			
	Audio		3316-60
	Automotive		3319-109
	Calculator		3320-1
	Camera		3320-11
	CATV		3324-45
	CB Radio		3320-40
	Clock		3320-48
	Game		3327-109
	Miscellaneous		3327-127
	Music		3320-137
	Organ		3320-137
	Radio	AM	3321-15
		AM/FM	3321-59
		FM	3321-119
	Remote Control		3322-153
	Speech		3323-97
	Tape Recorder		
		Audio	3323-150
			3316-60
		Video	3324-40
	Television		3324-45

Function			Page-Line
Consumer Circuits			
	Video Game		3327-109
	Watch		3320-48
Contact Bounce Eliminator			886-148
Controller			
	ACIA	Microprocessor, 6500	1453-26
		Microprocessor, 6800	1453-142
	ADLC	Microprocessor, 6800	1453-142
	Bubble Memory		1465-23
	Cassette		
		General	1465-23
		Microprocessor, 8080	1457-60
		Microprocessor, 8085	1457-279
	CCITT		4975-2
	Color Generator		
		Microprocessor, 1800	1451-101
	CRT	See CRT listings	1465-23
	Data Acquisition		3398-1
	Disk	Microprocessor, 68000	1463-109
	Display	General	1465-23
		Microprocessor, COP400	1450-108
		Microprocessor, 1800	1451-101
		Microprocessor, 2650	1452-119
		Microprocessor, 8080	1457-60
		Microprocessor, 8085	1457-279
	Dynamic RAM		2892-1
	Fiber Optic Link		3398-1
	Floppy Disk		
		General	1465-23
		Microprocessor, 1600	1461-25
		Microprocessor, 6800	1453-142
		Microprocessor, 8X300	1457-443
		Microprocessor, 8000	1463-6
		Microprocessor, 8048	1456-2
		Microprocessor, 8080	1457-60
		Microprocessor, 8085	1457-279
		Microprocessor, 9900	1462-52
	GPIB		1465-23
	Keyboard		
		Microprocessor, 2650	1452-119
		Microprocessor, 8080	1457-60
	LAN	See LAN	
	LCD/Console		1465-23
	Local Network		837-46
	Mini-Floppy Disk		1465-23
		Microprocessor, 6500	1453-26
	Packet Switching		
		Microprocessor, 16000	1462-86;1464-81
	Power Supply		3398-1
			3395-58

C (Cont'd)

Function			Page-Line
Controller			
	Printer	General	1465-23
		Microprocessor, 6500	1453-26
	Priority Interrupt		4975-2
	PWM	Current Mode	3398-1
	See also Detector and Sensor listings		
	Servo		3398-1
	SMD		1465-23
	Stepper Motor		3398-1
	Temperature		3398-1
	Traffic Light		3327-127
	Video	General	1465-23
		Microprocessor, 68000	1463-109
		Microprocessor, 8048	1456-2
		Microprocessor, 8086/88	1461-58
		Microprocessor, 9900	1462-52
	Video Attributes	Microprocessor, 2650	1452-119
	Winchester		1465-23
Controls			
	Consumer		3316-60
	Motor Speed	General	3398-1
		Recorders	3323-150
	Remote		3322-153
	SCR		3398-1
	TRIAC		3398-1
Converter			
	ADC, See ADC listings		
	BCD to Binary		886-148
	Code		3808-25
	Coordinate		3398-1
	DAC, See DAC listings		
	DC to DC		3398-1
	Flash		4975-2
	Flyback		4975-2
	Frequency to Voltage		3398-1
	Multifunction (XY/Z) exp M		3398-1
	RMS to DC		3398-1
	Thermal		3398-1
	Two-Wire to Four-Wire		3377-1
	Voltage to Frequency		3398-1
	Voltage to Voltage		3398-1
Coolant			
	Automotive		3319-109
Coordinate Converter			3398-1
Coprocessor			
	Text	Microprocessor, 8086/88	1461-58
Core Memory Sense Amplifiers			2899-1

Function			Page-Line
Correlator			
	Digital	DSP	4975-2
		Special	890-1
		TTL	854-1
Count Extender			
	for Prescalers		3375-1
Counter Logic Control			3375-1
Counters			
	Binary	CMOS	811-111
		ECL III/Misc.	849-75
		ECL 10K	845-45
		ECL 100K	848-72
		GaAs	851-2
		HNIL/HTL	852-16
		Special	890-1
		TTL	858-73 859-105
	Bi-Quinary	ECL 10K	845-61
	Counter/Driver		890-1
	Counter/NV Storage		890-1
	Counter/Timer		890-1
	Decade	CMOS	814-42
		ECL 10K	845-61
		HNIL/HTL	852-20
		Special	890-1
		TTL	860-58 861-66
	Miscellaneous	CMOS	816-71
		Special	890-1
		TTL	862-3
	Revolution		3327-127
CPUs			1405-1
CQUAM			3321-15
CRC	ECC Circuits		2878-1
	Generator	Microprocessor, Macrologic	1448-2
	TTL		886-148
	Winchester		4975-2
Crosspoint			
	See Switches		
CRT Circuits			1465-23
CRT Controller			
	General		1465-23

MSG FUNCTION INDEX

Function			Page-Line
C			**(Cont'd)**
CRT Controller			
	Microprocessor		
		16000	1464-81
		3870	1453-1
		6500	1453-26
		6800	1453-142
		8000	1463-6
		8048	1456-2
		8080	1457-60
		8085	1457-279
		9900	1462-52
CRT Geometry Correction			3398-1
CRT Interface			
	General		1465-23
CRT Vertical Countdown			3398-1
CRT Videotext			1465-23
CTCSS	Linear		3377-1
Current Boosters			
	Amplifiers		3306-1
	Followers		3329-1
Current Limiter			
	Telephone		3377-1
Current Mirror			3398-1
Current Sensing Gate			4975-2
Current Sensing Latch			3398-1
Current Source			
	Constant		3398-1
	Programmable		3398-1
Custom			
	See Semicustom listings		
C-bus			4975-2
C-44 Bus			4975-2
D			
D/A	See DAC listings		4975-2
DAC	Companding		3377-1
	Consumer		3316-60
	DSP		4975-2
	General		2849-1
	Microprocessor		
		General	4975-2
	RGB		1465-23
	Video	DSP	4975-2
		General	2849-1
Darlington			2894-1
			3309-1
DART	Microprocessor, Z80		1460-61
Data Access Register			
	Macrologic		
		Arithmetic	1448-2

Function			Page-Line
Data Acquisition			
	Controller		2894-1
	Microprocessor		
		General	1469-42
		8080	1457-60
		8085	1457-279
	Systems		3398-1
Data Encryption			
	Digital	Special	890-1
	Microprocessor		
		General	1469-42
		Macrologic	1448-2
		6800	1453-142
		8000	1463-6
		8080	1457-60
		9900	1462-52
Data Path Switch			806-1
	Macrologic		1448-11
Data Selector			
	See Multiplexer listings		
Data Separator			
	Floppy Disk		1465-23
Data Set			
	Telephone		3377-1
DC to DC Converter			3398-1
Decoders			
	Address, Programmable		4467-1
	CMOS		4975-2
			816-142
	Consumer		3322-153
	Display Drivers		2874-1
	ECL 10K		845-70
	ECL 100K		848-81
	FM Stereo		3321-119
	HNIL/HTL		852-25
			852-27
	Keyboard		2880-1
	Manchester		
		See Manchester listings	
	RC		3377-1
	See also Drivers, Digital		
	Tone	PLL Circuits	3375-1
		Telephone	3377-1
		Traffic Signals	3398-1
	Traffic Information		3319-109
	TTL		862-63
Deflection Circuit			
	TV		3324-45
Deglitcher			
	for DAC		3398-1
Degree-Sine			
	Code Converters		3808-25

Function			Page-Line
D			**(Cont'd)**
Delay	Element		886-148
	Serial Analog		3398-1
	Video	CCD	3398-1
Delta Modulation			
	Consumer		3323-97
	Telecom		3377-1
Delta Sigma Modem			3377-1
Demodulator			
	Balanced		3398-1
	Telecom		3377-1
Demultiplexer			
	Analog	CMOS	837-46
		Switches	2829-10
	Digital	CMOS	816-142
		GaAs	4975-2
		TTL	862-63
Design Automation			
	Design Tool Interfaces		4975-2
	Design Tools		
		Layout Verification	4975-2
		Silicon Compilers	4975-2
	Front End Design Tools		
		Circuit Simulators	4975-2
		Fault Simulators	4975-2
		Logic Simulators	4975-2
		Timing Verifiers	4975-2
	Gate Arrays		4975-2
	Hardware/Software		
		Computing Platforms for DA Software	4975-2
	Hardware Tools		
		Circuit Simulation Accelerators	4975-2
		Fault Simulation Accelerators	4975-2
		Integrated Test Systems	4975-2
		Logic Simulation Accelerators	4975-2
		Physical Modeling using Reference ICs	4975-2
	Physical Layout Tools		
		Full Custom	4975-2
		Gate Arrays	4975-2
		Printed Circuit Boards	4975-2
		Programmable Logic Devices	4975-2
		Standard Cells	4975-2
	Workstations		4975-2
Design Automation Tools			
	Gate Arrays		4975-2
	Linear Arrays		4975-2
	Programmable Logic		4975-2
	See Design Automation listings		4975-2
	Standard Cells		4975-2
Deskew Register			2878-1

Function			Page-Line
Detector			
	AC		3398-1
	Fiber Optic		3398-1
	Fluid		3398-1
	Frequency		
		Telecom	3377-1
	Level		3398-1
	Light		4975-2
	Peak		3398-1
	Phase-Frequency		886-148 3375-1
	Proximity		3398-1
	See Sensor listings		
	Smoke		3327-127
	SSB		3321-15
	Voltage		3398-1
Development Systems			1817-20
Device	Identification		
		See Part Number Guide	
	Numbers		
		See Part Number Index and Advertisers Product Index	
	Packages		
		See SMD Directory	
	Prefixes		
		See Part Number Guide	
	Suffixes		
		See Part Number Guide	
Dialer	Telephone		3377-1
Digital	Arrays	Gate Arrays	4439-1

MSG FUNCTION INDEX

Function			Page-Line
D			(Cont'd)
Digital	CMOS	Arithmetic Functions	806-1
		Buffers	808-64
		Counters, Binary	811-111
		Counters, Decade	814-42
		Counters, Misc.	816-71
		Decoders	816-142
		Dividers	834-98
		Drivers	819-60
		Flip-Flops, D	820-11
		Flip-Flops, J-K	822-164
		Gates, AND	823-162
		Gates, AND-OR	826-1
		Gates, AOI	826-28
		Gates, Ex. NOR	828-93
		Gates, Ex. OR	828-19
		Gates, Misc.	828-130
		Gates, NAND	824-109
		Gates, NOR	826-177
		Gates, OR	826-69
		Inverters	810-144
		Latches	828-152
		Memories, See Memory listings	831-45
		Miscellaneous	837-46
		Multiplexers	831-136
		Multivibrators	833-164
		Oscillators	834-98
		Shift Registers	834-146
		Translators	837-32
	DSP	Arithmetic Functions	4975-2
		Converters, A/D	4975-2
		Converters, D/A	4975-2
		Miscellaneous	4975-2
		Processors	4975-2
		Registers	4975-2
	ECL III/Misc.		
		Counters	849-75
		Flip-Flops, D	849-93
		Flip-Flops, R-S	849-99
		Gates, Ex. NOR	849-109
		Gates, Ex. OR	849-108
		Gates, NOR	849-101
		Gates, OR	849-100
		Gates, OR/NOR	849-102
		Latches	849-110
		Miscellaneous	850-0
		Multivibrators	849-111
		Shift Registers	849-113
Digital	ECL 10K		
		Arithmetic Functions	845-1
		Buffers	845-37
		Counters, Binary	845-45
		Counters, Decade	845-61
		Decoders	845-70
		Drivers	845-99
		Flip-Flops, D	845-110
		Flip-Flops, J-K	845-136
		Gates, AND	846-1
		Gates, Ex. OR	846-131
		Gates, Ex. OR/NOR	846-137
		Gates, NOR	846-32
		Gates, OR	846-13
		Gates, OR/NOR	846-73
		Gates, OR-AND	846-99
		Gates, OR-AND/Invert	846-115
		Inverters	845-40
		Latches	846-145
		Memories, See Memory Listings	847-38
		Miscellaneous	848-1
		Multiplexers	847-93
		Multivibrators	847-123
		Shift Registers	847-124
		Translators	847-132
	ECL 100K		
		Arithmetic Functions	848-59
		Buffers	848-68
		Counters	848-72
		Decoders	848-81
		Drivers	848-84
		Flip-Flops, D	848-94
		Gates, AOI	
		Gates, Ex. OR/NOR	848-114
		Gates, OR/NOR	848-102
		Latches	848-117
		Memories, See Memory listings	848-122
		Miscellaneous	849-50
		Multiplexers	849-22
		Shift Registers	849-35
		Translators	849-41

Function			Page-Line
D			**(Cont'd)**
Digital	GaAs	Buffers	851-1
		Counters, Binary	851-2
		Dividers	851-2
		Drivers	851-7
		Flip-Flops, D	851-8
		Gates, AND/NAND	4975-2
		Gates, Ex OR	4975-2
		Gates, NAND	4975-2
		Gates, NOR	851-11
		Gates, OR/NOR	4975-2
		Memories	
		Miscellaneous	851-17
		Multiplexers	851-14
		Shift Registers	851-16
	HNIL/HTL		
		Arithmetic Functions	852-1
		Buffers	852-3
		Counters, Binary	852-16
		Counters, Decade	852-20
		Decoders	852-25
		Decoders/Drivers	852-27
		Drivers	852-35
			852-27
		Flip-Flops, D	852-40
		Flip-Flops, J-K	852-42
		Flip-Flops, R-S	852-50
		Gates, AND	852-51
		Gates, AOI	852-78
		Gates, Ex. OR	852-87
		Gates, Misc.	852-88
		Gates, NAND	852-53
		Gates, NOR	852-84
		Gates, OR	852-83
		Inverters	852-3
		Latches	852-93
		Miscellaneous	853-6
		Multiplexers	852-94
		Multivibrators	852-96
		Shift Registers	852-101
		Translators	852-104
	Special		890-1

Function			Page-Line
Digital	TTL	Arithmetic Functions	854-1
		Buffers	856-81
		Counters, Binary Count Up	858-73
		Counters, Binary Count Up/Down	859-105
		Counters, Decade Count Up	860-58
		Counters, Decade Count Up/Down	861-66
		Counters, Miscellaneous	862-3
		Decoders	862-63
		Drivers	864-7
		Flip-Flops, D	864-174
		Flip-Flops, J-K	867-72
		Gates, AND	868-139
		Gates, AND-OR	872-72
		Gates, AOI	872-75
		Gates, Ex. NOR	874-145
		Gates, Ex. OR	874-59
		Gates, Misc.	
		Gates, NAND	869-166
		Gates, NOR	865-3
		Gates, OR	873-22
		Gates, OR/NOR	874-51
		Inverters	857-75
		Latches	875-1
		Memories, See Memory listings	876-130
		Miscellaneous	886-148
		Multiplexers	877-92
		Multivibrators	880-90
		Shift Registors	881-9
		Transceivers, See also Line Circuits	883-28
		Translators	886-126
Digital Bus Circuits			
	ECL III		850-0
	ECL 10K		848-1
	ECL 100K		849-50
Digital Disk			4975-2
Digital Gain Set	for op-amps		3398-1
Digital Signal Processing			4975-2
Digital to Analog Converters	See DAC listings		
Diode Arrays			3311-39
Diode Matrix	Programmable		
		Digital, Special	890-1
Direction Indicator	Automotive		3319-109
Discriminator			
	Direction		4975-2
	Window		3398-1

Function			Page-Line
D			(Cont'd)
Disk	Digital, Consumer		3316-60
	Drivers		2892-1
	Hard Disk Circuits		1465-23
	Phase Locked Loop	Microprocessor, 68000	1463-109
	Video		3324-45
	Winchester Disk Circuits		1465-23
Display Controller			4975-2
Display Drivers	Digital, CMOS		819-60
	Electroluminescent		2874-1
	Gas Discharge		2874-1
	General		2874-1
	Lamp		2874-1
	LCD		2874-1
	LED		2874-1
	Microprocessor	COP400	1450-108
		OLMS40	1451-59
	TV Channel		3324-45
	with Memory	Digital, Special	890-1
Distributors	See Manufacturers and Distributors Directory		
Divider Extender	Digital	Special	890-1
Dividers	Consumer		3320-137
	Extender	Digital, Special	890-1
	Fixed	Digital, CMOS	834-98
		Digital, ECL III	849-75
		Digital, ECL 10K	848-1
		Digital, ECL 100K	4975-2
		Digital, GaAs	851-2
		Digital, Special	890-1
		Digital, TTL	862-3
	Linear	See also Multipliers	3398-1
	PLL Circuits		3375-1
	Programmable	Digital, CMOS	4975-2
		Digital, GaAs	851-2
		Digital, Special	890-1
		Digital, TTL	862-3
	See Counter listings		
Dolby			3316-60
Doubler	Voltage		3398-1
DPDT			4975-2
DPST			4975-2

Function			Page-Line
DRAM	See Memory listings		
DRC			3398-1
Drivers	Analog Switch		2828-103
	BCD to Display		2874-1
	Bridge		2894-1
	Bubble Memory		2892-1
	Bus	See Line Drivers	4975-2
	CCD		2892-1
	CMOS		819-60
			837-46
	Disk		2892-1
	Display	Digital CMOS	819-60
		General	2874-1
		Radio	3321-59
		See Display Driver listings	
	ECL 10K		845-99
	ECL 100K		848-84
	Electro-Optic		3398-1
	Fluorescent		2874-1
	GaAs		851-7
	Hammer		2894-1
	High Current		2894-1
		Digital, TTL	864-7
	High Voltage		2894-1
		Digital, CMOS	819-60
	HNIL/HTL		852-35
			852-27
	Lamp		2894-1
			2874-1
	Latch/Decoder/Drivers		4975-2
			4975-2
	LCD		2874-1
	LED		2874-1
	Line	Also see Line Circuits	2881-1
			2883-17
	Memory		2892-1
	Meter	Air Core	3398-1
		HiFi	3327-127
	MOS Clock		2892-1
	MOS Memory		2892-1
	Motor	Amplifiers	3306-1
		General	2894-1
			3398-1
		HiFi	3327-127
	Peripheral		2894-1
	PIN Diode		890-1
			2894-1
			3398-1
	Plasma		2874-1

Function			Page-Line
D			**(Cont'd)**
Drivers,	Power Amplifier		4975-2
	Printer		2894-1
	Relay		2894-1
		Telecom	3377-1
	Solenoid		2894-1
	Stepper Motors		2894-1 3398-1
	Thermal Print Head		2894-1
	Transistor		4975-2
	TTL		864-7
	Various	See Buffer listings	
DSP			4975-2
DTMF	Telecom		3377-1
DUART	Transmitters-Receivers		2900-1
DVM	Circuits		2848-1
	Logic	Digital, Special	890-1
Dynamic RAM Controller			2892-1
Dynatex			3316-60
E			
EAROMs			3811-1
EBCDIC	Code Converters		3808-25
ECC	ECL 10K		848-1
	ECL 100K		849-50
	General		2878-1
	Microprocessor	2650	1452-119
		2900	1448-42
		68000	1463-109
		8000	1463-6
		8080	1457-60
	Telecom		3377-1
	TTL		886-148
ECC Transceiver	Interface	Line Transceivers	2888-1
EDC	See ECC listings		
Electroluminescent Drivers	See Display Driver listings		
Electro-Optic Driver			3398-1
Electro-Optics			3398-1
Eliminator	Contact Bounce		886-148
Encoder	Consumer		3322-153
	Encoder	See Priority listings	
Encoder	Keyboard	General	2880-1
		Microprocessor, 1800	1451-101
	Manchester	See Manchester listings	
	Pulse DTMF	Microprocessor, 9900	1462-52
	RC		3377-1
	Telephone Keyboard		3377-1
Encryption	See Data Encryption		
Energy Saver	Motor		3398-1
Engine RPM	Automotive		3319-109
EPCI	Transmitters-Receivers		2900-1
EPROMs	See Memory listings		4975-2
Equalizer			3316-60
Erasable Logic			4975-2
Error Correction	See ECC		
Ethernet Circuits	General		1465-23
	Microprocessor	68000	1463-109
EXORbus			4975-2
EXORciser Bus			2031-6
Exposure	Camera		3320-11
E^2 Logic			4975-2
E^2 PROMs	See Memory listings		3811-1
F			
Facsimile			3327-127
Fast Fourier Transform			4975-2 1469-42
FFT	See Fast Fourier Transform		
Fiber Optics	Amplifiers		3306-1
	Circuits		3398-1
Field Programmable Logic			4467-1
FIFOs	Microprocessor	Macrologic	1448-11
		8000	1463-6
	RAM Controller	Microprocessor, 8X300	1457-443
	See Memory listings		3809-1
Filters	Active		3398-1
	Bandpass		3377-1
	Bandsplit		3377-1

MSG FUNCTION INDEX

Function			Page-Line
F			(Cont'd)
Filters	Codec		3377-1
	Hearing Aid		4975-2
	Impulse Response	Digital, Special	890-1
	Impulse Response, Finite		4975-2
			886-148
	Low Pass		3377-1
	Modem		3377-1
	Music		3327-127
	PCM		3377-1
	Speech		3377-1
	Switched Capacitor Array		3398-1
	Time-based		3398-1
	Touchtone		3377-1
	Transversal		4975-2
			3398-1
	Tunable		3377-1
	TV		3324-45
Flash Converter			4975-2
Flasher			2874-1
			3398-1
Flip-Flops	D-Type	CMOS	820-11
		ECL III/Misc.	849-93
		ECL 10K	845-110
		ECL 100K	848-94
		GaAs	851-8
		HNIL/HTL	852-40
		TTL	864-174
	J-K Type	CMOS	822-164
		ECL 10K	845-136
		HNIL/HTL	852-42
		TTL	867-72
	R-S Type	ECL III/Misc.	849-99
		HNIL/HTL	852-50
Floating Point	See Arithmetic listings		4975-2
Floating Point Processor			4975-2
			4975-2
Floppy Disk	Amplifiers		3306-1
	Circuits		1465-23
	Controllers	See Controller listings	
Fluid Detector			3398-1
Fluorescent Display Driver			2874-1
Flyback Converter			4975-2
Followers			3329-1

Function			Page-Line
Fourier	See Fast Fourier Transform		4975-2
FP Package	See Surface Mount Directory		4975-2
Frequency Detector	Telecom		3377-1
Front End Design Tools	See Design Automation listings		4975-2
FSK	PLL Circuits		3375-1
	Telecom		3377-1
Function Generators			4975-2
			3375-1
G			
GaAs			851-1
Gain Set	for op amps		890-1
Gallium Arsenide			851-1
Game	Arithmetic Game		1469-42
	Circuits		3327-109
Gate Arrays	Field Programmable		4467-1
	General		4439-1
	See Array listings		
	See Design Automation listings		4975-2
Gate Delay	Gate Arrays		4975-2
Gates	AND	CMOS	823-162
		Drivers	2894-1
		ECL 10K	846-1
		HNIL/HTL	852-51
		TTL	868-139
	AND/NAND	GaAs	4975-2
	AND-OR	CMOS	826-1
		TTL	872-72
	AND-OR-Invert	CMOS	826-28
		HNIL/HTL	852-78
		TTL	872-75
	Exclusive NOR	CMOS	828-93
		ECL III/Misc.	849-109
		TTL	874-145
	Exclusive OR	CMOS	828-19
		ECL III/Misc.	849-108
		ECL 10K	846-131
		GaAs	4975-2
		HNIL/HTL	852-87
		TTL	874-59

Function			Page-Line
G			**(Cont'd)**
Gates	Exclusive OR/NOR	ECL 10K	846-137
		ECL 100K	848-114
	High Current	See Driver listings	864-7
	Miscellaneous	CMOS	828-130
		HNIL/HTL	852-88
		TTL	
	Multifunction	CMOS	828-130
	NAND	CMOS	824-109
		Drivers	2894-1
		GaAs	4975-2
		HNIL/HTL	852-53
		TTL	869-166
	NOR	CMOS	826-177
		Drivers	2894-1
		ECL III/Misc.	849-101
		ECL 10K	846-32
		GaAs	851-11
		HNIL/HTL	852-84
		TTL	865-3
	OR	CMOS	826-69
		Drivers	2894-1
		ECL III/Misc.	849-100
		ECL 10K	846-13
		HNIL/HTL	852-83
		TTL	873-22
	OR/NOR	ECL III/Misc.	849-102
		ECL 10K	846-73
		ECL 100K	848-102
		GaAs	4975-2
		TTL	874-51
	OR-AND	ECL 10K	846-99
			846-115
	OR-AND-Invert	ECL 100K	848-108
Gates with Latches	See latch listings		
Generator	Baud Rate	Digital	890-1
		Interface	2900-1
	Bit Rate		837-46
	Character		3808-1
	Color Bar		3324-45
	Function		3375-1
Generator	Music	Accompaniment	3320-137
		Noise	3320-137
		Octave	3320-137
	Parity	See Parity listings	
	Polynomial		2878-1
	Random Noise		3398-1
	Rythm		3320-137
	Sound	See Sound Generator listings	
	Tone	Microprocessor, 1800	1451-101
		Telecom	3377-1
	TV Test Pattern		3324-45
	Video Display	Microprocessor, 6800	1453-142
	Waveform		3375-1
GFI			3327-127
GPIB	General		1465-23
	Microprocessor	General	1465-23
		16000	1463-100
			1464-81
			1462-86;1464-81
		6800	1453-142
		8048	1456-2
		8080	1457-60
		8085	1457-279
		8086/88	1461-58
		9900	1462-52
	Transceiver	Line Transceivers	2888-1
	TTL		886-148
Graphic Equalizer			3316-60
Graphics Circuits			1465-23
Ground Fault Interrupter			3327-127
Guard	Polarity		3377-1
Gyrator			3377-1
H			
HAL			4975-2
Hall Effect Devices	Digital		890-1
	Interface		2894-1
	Linear		3398-1
Hamming Code ECC			2878-1
Hard Array Logic			4467-1
Hard Disk Circuits			1465-23
Hardware Tools	See Design Automation listings		4975-2
HB3/AMI	Linear	Telecom	3377-1
HDB3/AMI	Linear	Telecom	3377-1

Function — Page-Line

H (Cont'd)

- HDLC
  - Interface
    - Transmitters-Receivers 2900-1
  - Microprocessor
    - 8048 1456-2
    - 8080 1457-60
- Heart Rate Monitor 837-46
- Hollerith
  - Code Converters 3808-25

I

- IBM PC Bus 2031-10
- IBM 3270
  - Interface
    - Transmitters-Receivers 2900-1
- IBM 3274
  - Interface
    - Transmitters-Receivers 2900-1
- IBM 3276
  - Interface
    - Transmitters-Receivers 2900-1
- IBM 360
  - Interface
    - Line Drivers 2881-1
    - Line Receivers 2885-1
- IBM 370
  - Interface
    - Line Drivers 2881-1
    - Line Receivers 2885-1
- IBM 3740
  - Microprocessor 1465-23
- IEEE-488
  - Microprocessor 1465-23
  - See GPIB listings
- IF See Radio Circuits listings 4975-2
- Ignition
  - Automotive 3319-109
- Image Rotator 3398-1
- Image Sensors 3398-1
- Indicator
  - Automotive Direction 3319-109
  - Low Battery 3398-1
- Infrared Circuits 3322-153
  - 3377-1
- Injector Drive
  - Automotive 3319-109
- Integrating ADC 4975-2
- Interface
  - Analog Switches 2822-1
  - Analog to Digital Converters
    - Binary 2832-2
    - Decimal 2848-1
  - Digital to Analog Converters 2849-1
  - Display 1465-23

Function — Page-Line

- Interface
  - Display Drivers 2874-1
  - Error Checking Circuits 2878-1
  - Keyboard 1465-23
  - Keyboard Encoders-Decoders 2880-1
  - Line Drivers 2881-1
  - Line Receivers 2885-1
  - Line Transceivers 2888-1
  - Memory Drivers 2892-1
  - Multiprocessor 4975-2
  - Peripheral Drivers 2894-1
  - Sense Amplifiers 2899-1
  - Telephone 3377-1
  - Transmitters-Receivers
    - Serial 2900-1
- Interpolation
  - Pulse Generator 4975-2
- Intrusion 3327-127
- Inverters
  - CMOS 810-144
  - ECL 10K 845-40
  - High Current
    - See Driver listings
  - High Power 2894-1
  - HNIL/HTL 852-3
  - PMOS 890-1
  - See also Buffers 4975-2
  - TTL 857-75
  - Voltage 3398-1
- iSBC Bus 2031-37
- iSBX Bus 2032-36
- Isolator 4975-2

K

- Keyboard
  - Decoders 2880-1
  - Encoders 2880-1
  - Interface 4975-2
    - Capacitive 3398-1
- Keyboard Controller
  - See Controllers
- Keyed Access EPROM 4975-2

L

- LAC See Look Ahead Carry listings
- Lamp Monitor
  - Automotive 3319-109
- LAN
  - Circuits 1465-23
  - Controller
    - Microprocessor, 16000 1462-86; 1464-81
    - Microprocessor, 68000 1463-109
  - Ethernet 1465-23

Function			Page-Line
L			**(Cont'd)**
LAN	Receiver		
		Microprocessor, 16000	1464-81
	Token Passing		1465-23
LANCE			4975-2
Latch/Decoder/Driver			
	Digital	CMOS	819-60
		TTL	862-63
	Display		4975-2
Latches			
	Addressable		4975-2
	CMOS		828-152
	Current Sensing		3398-1
	ECL III/Misc.		849-110
	ECL 10K		846-145
	ECL 100K		848-117
	HNIL/HTL		852-93
	Microprocessor		
		1800	1451-101
	TTL		875-1
Layout	See Design Automation listings		4975-2
LCCC Package			
	See Surface Mount Directory		4975-2
LCD Drivers			
	See Display Driver listings		
LED Drivers			
	See Display Driver listings		
Level Detector			3398-1
	Audio		4975-2
Level Meter			3398-1
Level Shifters			
	See Translators		
Library	See Cell Library listings		4975-2
LIFOs	See Memory listings		3810-59
Light Activated Circuits			3398-1
Limiter	Current		
		Telephone	3377-1
	Voltage		
		Telephone	3377-1
Line Circuits			
	Digital Bus Circuits		837-46
			883-28
	General		2881-1
Line Drivers			
	Differential		2883-17
	Single Ended		2881-1
Line Interface Circuits			
	Telephone		3377-1
Line Receivers			
	Differential		2886-11
	Single Ended		2885-1
Line Transceivers			
	Differential		2891-15

Function			Page-Line
Line Transceivers			
	Single Ended		2888-1
Linear	Amplifiers		
		Special Purpose	3306-1
	Arrays	Diode	4975-2
		Gate Arrays	4462-1
		Semicustom	4462-1
		Special Purpose	3311-39
		Transistor	3309-1
	Comparators		3312-1
	Consumer Circuits		
		See Consumer Circuits	
	Followers		3329-1
	Operational Amplifiers		
		See Operational Amplifiers	
	Other Linear Devices		3398-1
	Phase Locked Loops/Synthesizers		3375-1
	Prescalers		3375-1
	Telecommunication Circuits		3377-1
	Voltage Regulators		
		See Voltage Regulators	
Linear/Digital Arrays			4462-1
Liquid Crystal Display Driver			2874-1
Local Area Network Circuits			
	See LAN		
Lock	Digital	Consumer	3327-127
Logic	Hard Array		4467-1
	Majority		828-130
	Programmable		4467-1
	See Digital listings		
Logic Unit			
	Digital	CMOS	806-1
		ECL 10K	845-1
		ECL 100K	848-59
		TTL	854-1
Look Ahead Carry			
	Digital	CMOS	806-1
		ECL 10K	845-1
		ECL 100K	848-59
		TTL	854-1
Loop Disconnect Dialer			3377-1
Low Battery Indicator			3398-1
LRCC			2878-1
LSI-11			4975-2
LVDT Signal Conditioner			3398-1
M			
Macrocells			4975-2
Majority Logic			
	Digital	CMOS	828-130
Manchester Adapter			
	Digital	CMOS	837-46

M **(Cont'd)**

Function			Page-Line
Manchester Decoder			
	Digital	CMOS	837-46
	Interface		
		Transmitters-Receivers	2900-1
	Microprocessors		1465-23
Manchester Encoder			
	Digital	CMOS	837-46
	Interface		
		Transmitters-Receivers	2900-1
	Microprocessors		1465-23
Manufacturers			
	See Manufacturers and Distributors Directory		
MATV			3324-45
Melody Circuit			
	Clock		3320-48
Memory			
	Active Element		
		Digital, TTL	876-130
	Analog		3398-1
	Bubble		3826-3
	Bubble, Circuits		
		See Bubble Memory	
	CAM	ECL 10K	847-38
		ECL 100K	848-122
	CCD		
	Character Generators		3808-1
	Code Converters		3808-25
	Controllers		2892-1
	Drivers		2892-1
	Dualport		4975-2
	EAROMs		3811-1
	EPROMs		4975-2
	E^{2}PROMs		3811-1
		Keyed Access	4975-2
	FIFOs		3809-1
		CMOS, Special Purpose	831-45
		TTL, Special	876-130
	LIFOs		831-45 3810-59
		Microprocessor, 8X300	1457-443
	Management		4975-2
	Multiport Register		831-45 876-130
	NVRAMs		3811-1
Memory			
	PROMs		3814-1
		as logic	4467-1
		ECL 10K	847-38
		ECL 100K	848-122
		Electrically Erasable	3811-1
		E^{2}PROMs	3811-1
		MPU System Components	1448-1
		UV Erasable	3814-1
	RAMs	CMOS, Special Purpose	831-45
		Dynamic	3826-13
		ECL 10K	847-38
		ECL 100K	848-122
		GaAs	
		MPU System Components	1448-1
		Non-volatile	3811-1
		Static	
		TLL, Special Purpose	876-130
		Video DAC	4975-2
		with Batteries	4975-2
	ROMs	E^{2}PROMs	3811-1
		General	3849-1
		MPU System Components	1448-1
		Speech	3323-97
	Shift Registers		
		Dynamic	3854-1
		Static	3854-23
		TTL	876-130 881-9
	Simultaneous Read/Write		
		Digital, TTL	876-130
	Triport	Telephone	3377-1
	TV		4975-2
Memory Drivers			2892-1
Meter	Level		3398-1
	Peak Power		4975-2
Meter Driver			
	Air Core		3398-1
	HiFi		3327-127
Micro Bus			2033-54
Microboard			4975-2
Microcomputer Boards			
	Processor		2005-1

Function			Page-Line
M			**(Cont'd)**
Microcomputer Boards			
	Support Boards		
		Apple	4975-2
		CIMbus	4975-2
		C-bus	4975-2
		C-44 Bus	4975-2
		EXORbus	4975-2
		EXORciser Bus	2031-6
		IBM PC Bus	2031-10
		iSBC Bus	2031-37
		iSBX Bus	2032-36
		LSI-11	4975-2
		Micro Bus	2033-54
		Microboard	4975-2
		Micromodule	4975-2
		Monoboard	4975-2
		MS DOS Bus	2034-12
		Multibus	2034-16
		Multimodule Bus	2037-2
		PCbus	4975-2
		Proprietary Bus	2037-6
		Q-Bus	2037-41
		RM-65 Bus	2038-7
		SCSI	4975-2
		Special	4975-2
		STDbus	2039-1
		S-100 Bus	2038-8
		TI Professional Bus	2042-48
		TM990 Bus	2042-50
		UNIBUS	4975-2
		VERSAbus	2043-8
		VMEbus	2043-32
Microcomputer Development Systems			1817-20
Microcomputers			1405-1
	See Microprocessor listings		
Microcontroller			
	See Microprocessor, System Components		1405-1
Micromodule			4975-2
Microprocessor			
	CPU Boards		2005-1
	CPUs		1405-1
	DSP		4975-2
	General Purpose Circuits		1469-42
	Peripheral Controllers		1465-23

Function			Page-Line
Microprocessor			
	System Components		
		Bit Slice	1448-1
		General Purpose	1469-42
		Peripheral Controllers	1465-23
		1 Bit	1449-127
		12 Bit	1462-96
		16 Bit	1463-6
		16/32 Bit	1464-81
		2 Bit Slice	1448-36
		32 Bit	1465-8
		4 Bit	1450-3
		4 Bit Slice	1448-42
		8 Bit	1451-101
		8 Bit Slice	1449-109
		8/16 Bit	1461-25
Military			
	See Military pages		4975-2
MIL-M-38510			
	See Military Pages		
MIL-STD-1553			
	Encoder/Decoder		
		Microprocessor, General	1469-42
	Interface		
		Transmitters-Receivers	2900-1
MIL-STD-1750A			1463-98
MIL-STD-188			
	Interface		
		Line Drivers	4975-2
			2883-17
		Line Receivers	4975-2
			2886-11
MIL-STD-883			
	See Military Pages		
Miscellaneous			
	Digital	CMOS	837-46
		DSP	4975-2
		ECL III/Misc.	850-0
		ECL 10K	848-1
		ECL 100K	849-50
		GaAs	851-17
		HNIL/HTL	853-6
		Special	890-1
		TTL	886-148
	Linear	Other Linear Devices	3398-1
	Microprocessor		
		General Purpose	1469-42
Mixer	Amplifiers		3306-1
	Balanced		4975-2
			3398-1
	Radios		4975-2
			3321-119

MSG FUNCTION INDEX

Function			Page-Line
M			**(Cont'd)**
Modem	Microprocessor	PPS-4/8	
		6800	1453-142
		9900	1462-52
	PLL Circuits		3375-1
	Telecom		3377-1
	Transmitters-Receivers		2900-1
Modulator	Pulse-Width		3398-1
			3395-58
	Telecom		3377-1
	TV		3324-45
	TV Games		4975-2
Modulator/Demodulator	Balanced		3398-1
	Telecom	See also Modem	3377-1
Moisture Sensor			4975-2
Monitor	Automotive Lamp		3319-109
	Heart Rate		837-46
	See Protection listings		
Monoboard			4975-2
MOS Memory Drivers			2892-1
Motor Circuits	Interface	Peripheral Drivers	2894-1
	Linear	Consumer	3327-127
Motor Driver	Amplifiers		3306-1
	General		2894-1
	Hi-Fi		3327-127
Motor Speed Control			4975-2
	General		2894-1
	Recorders		3323-150
MPCC	Interface	Transmitters-Receivers	2900-1
	Microprocessor	System Components	1465-23
MS DOS Bus			2034-12
Multibus			2034-16
Multifunction Converter			3398-1
Multimodule Bus			2037-2
Multiplexer/Comparator	Digital	Special	890-1
Multiplexer/Demultiplexer	Digital	Special	890-1
Multiplexers	Analog	Analog Switches	2829-10
		CMOS	837-46

Function			Page-Line
Multiplexers	Digital	CMOS	831-136
		ECL 10K	847-93
		ECL 100K	849-22
		GaAs	851-14
		HNIL/HTL	852-94
		Special	890-1
		TTL	877-92
Multiplexing	Time Division		3377-1
	Time Slot		3377-1
Multipliers	Analog		3398-1
	Complex Numbers		4975-2
	Digital	CMOS	806-1
		DSP	4975-2
		ECL 10K	845-1
		Special	4975-2
		TTL	854-1
	Microprocessor	EPIC	1449-113
		1800	1451-101
		2900	1448-42
	Rate	CMOS	837-46
		TTL	886-148
Multipliers/Dividers	Analog		3398-1
Multiprocessor Interface			4975-2
Multivibrators	CMOS		833-164
	ECL III/Misc.		849-111
	ECL 10K		847-123
	HNIL/HTL		852-96
	TTL		880-90
Multi-Protocol Communications	See MPCC		
Music	Chimes		3327-127
	Clock Melody Circuits		3320-48
	General		3320-137
	VCO		3327-127
Muting Circuit	Consumer		3316-60
MUX	See Multiplexer listings		
M38510	See Military Pages		
N			
NAND Gate	See Gate listings		
Network	LAN	See LAN	
Nines Complementor	Digital	CMOS	806-1

Function			Page-Line
N			**(Cont'd)**
Noise	Random Generator		3398-1
	Reduction, Consumer		3316-60
	Reduction, FM		4975-2
	Source		4975-2
NOR Gate	See Gate listings		
NTDS			2881-1
			2886-11
NTSC	TV		3324-45
NVRAMs			3811-1
O			
OCTART	Transmitters-Receivers		4975-2
Octave Generator	Music		3320-137
Operational Amplifiers	Buffers		3329-1
	Characteristics	Duals	3357-183
		Quads	3369-27
		Singles	3335-1
		Triples	3369-2
	Chopper Stabilized		3335-1
	Digital Gain Set		890-1
	General Purpose		3330-28
	High Output Current		3330-140
	High Speed		3331-40
	High Voltage		3331-92
	Instrumentation		3335-1
	Low Bias Current		3332-1
	Low Drift		3341-6
	Low Power	Non-Adjustable	3333-1
		Programmable	3347-9
	Programmable		3334-17
	Single Supply	Duals	3334-100
		Quads	3334-141
		Singles	3334-75
	Special	with Comparators	3306-1
			3315-22
	Unity Gain		3329-1
	Wide Band		3334-199
Opto Electronics			3398-1
OR Gate	See Gate listings		
Organ Circuits			3320-137
Oscillators	Analog		3398-1

Function			Page-Line
Oscillators	Clock Driver	TTL	4975-2
	CMOS		834-98
	Crystal		3375-1
			3398-1
	Fixed		3398-1
	Quadrature		3398-1
Overcurrent Protection			3327-127
Overvoltage Protector			3398-1
P			
Packages	See Surface Mount Directory		4975-2
Packet Switching	Microprocessor	16000	1464-81
PAL	Logic		4975-2
	TV		3324-45
Parity Generator	CMOS		806-1
	ECL 10K		848-1
	ECL 100K		849-50
	Interface	ECC	2878-1
	TTL		886-148
Parity Tree	CMOS		837-46
	TTL		886-148
PCbus			4975-2
PCI	Transmitters-Receivers		2900-1
PCM	Filter		3377-1
	Receiver		4975-2
	Repeator		3377-1
Peak Detector			3398-1
Peripheral Drivers			2894-1
Phase Comparators			3375-1
Phase Control	AC		3398-1
Phase Locked Loop Circuits	Digital	CMOS	837-46
		TTL	886-148
	Linear		3375-1
	Radio		3321-119
Photodetector	See Sensor, Image		
PIA	General		1469-42
			1465-23
	6800		1453-142
Pin Cushion Correction			3324-45
PIN Diode Driver	Digital	Special	890-1
	Interface		2894-1

MSG FUNCTION INDEX

Function			Page-Line
P			(Cont'd)
PIN Diode Driver	Linear	Other Linear Devices	3398-1
PLA			4975-2
Plasma Display Driver			2874-1
PLCC Package	See Surface Mount Directory		4975-2
PLE			4975-2
PLL	See Phase Locked Loop listings		
Polarity Guard			3377-1
Polynomial ECC	See also ECC		2878-1
Polynomial Generator			4975-2
			2878-1
Potentiometer			3398-1
Power Strobe			4975-2
Power Supply	ac-dc regulator		4975-2
	See Voltage Regulator listings		4975-2
Power Supply Controller			3398-1
			3395-58
Preamplifiers	Cassette Recorder		3323-150
	Consumer		3316-60
	Disk		4975-2
	Linear		3306-1
	Remote Control		4975-2
			3322-153
	See also Amplifiers		
Prefixes	See Part Number Guide		
Prescalers	AM/FM		3375-1
			3321-119
	Count Extender		3375-1
	Digital		890-1
		ECL III	849-75
		ECL 10K	848-1
		GaAs	851-2
	FM		3321-119
	General		3375-1
	TV		3375-1
Pressure Transducers			3398-1
Priority Encoder	Digital	CMOS	837-46
		ECL 10K	4975-2
		ECL100K	4975-2
		TTL	886-148
	Microprocessor	2900	1448-42
Priority Interrupt Controller			4975-2

Function			Page-Line
Processor	Analog Real Time		4975-2
	Analog Signal		3398-1
	Arithmetic	Digital, Special	890-1
		DSP	4975-2
		Microprocessor, TMS1000	1451-76
		Microprocessor, Z800	1461-21
		Microprocessor, 16000	1463-100
			1464-81
		Microprocessor, 32	1465-8
		Microprocessor, 68000	1463-109
		Microprocessor, 8000	1463-6
		Microprocessor, 8080	1457-60
		Microprocessor, 8086	1461-32
		Microprocessor, 8088	1461-32
		Microprocessor, 9440	1463-93
	Bilingual TV		3324-45
	Burst Error	General	1469-42
		Microprocessor, 8000	1463-6
	Color TV		3327-109
	DSP		4975-2
	Floating Point		4975-2
			4975-2
	See also Microprocessor		
	Text	Microprocessor, 8086/8088	1461-58
	TV		3324-45
Programmable Diodes			890-1
Programmable Logic	General		4467-1
	Sequencer		4467-1
PROMs	as logic		4467-1
	See also Memory listings		3814-1
	See Microprocessor, System Components		
Proprietary Bus			2037-6
Protection	Overcurrent		3327-127
	Overvoltage		3398-1
	Telephone		3377-1
	Undervoltage		4975-2
Proximity Detector	Electromagnetic		3398-1
PSAR	Transmitters-Receivers		2900-1
PSART	Transmitters-Receivers		2900-1
PSAT	Transmitters-Receivers		2900-1
PSK	Telecom		3377-1
Pulse Synchronizer			886-148
Pulse-Width Modulator			3398-1
			3395-58

Function			Page-Line
Q			
QFP Package	See Surface Mount Directory		4975-2
QPL	See Military Pages		
Quantizer			3398-1
Q-Bus			2037-41
R			
Radio Circuits	AM		3321-15
	AM/FM		3321-59
	FM		3321-119
	Radio Control		4975-2
	SSB		4975-2
	TV		3324-45
RAMs	See also Memory listings		3826-3
Rate Multiplier	Digital	CMOS	837-46
		TTL	886-148
RC Decoder			3377-1
RC Encoder			3377-1
Receivers	CB Radio		3320-40
	Fiber Optic		3398-1
	FSK		3377-1
	IR		3377-1
			3322-153
	Line	ECL 10K	4975-2
		See also Line Circuits	2885-1
			2886-11
	PCM		4975-2
	Remote Control	Consumer	3322-153
	Serial		2900-1
	Sonar		4975-2
Recorder	Video Tape		3324-40
Reference Voltage			3398-1
Registers	CRT		4975-2
	DSP		4975-2
	See Flip-Flop listings		
	See Memory listings		
	See Shift Register listings		
	Successive Approximation	CMOS	837-46
		TTL	886-148
Regulators	Motor Speed		4975-2
			3398-1
			3327-127
	See Voltage Regulators		
Regulators	Switching		3395-58
Relay Driver	See Drivers		
Remote Control Circuits	Amplifiers		3306-1
	Consumer		3322-153
	Digital	CMOS	837-46
Resolver Systems			4975-2
			3398-1
Revolution Counter	Consumer		3327-127
Rhythm Circuit	Music		3320-137
Ringer	Telecom		3377-1
RMS to DC Converter			3398-1
RM-65 Bus			2038-7
ROMs	See also Memory listings		3849-1
Rotator	Image		3398-1
RS232	Line Drivers		2881-1
	Line Receivers		2885-1
			2886-11
RS422	Line Drivers		2881-1
			2883-17
	Line Receivers		2886-11
RS423	Line Drivers		2881-1
			2883-17
	Line Receivers		2886-11
RS449	Transmitters-Receivers		4975-2
RS485	Line Transceivers		2891-15
S			
Sales Offices	See Manufacturers and Distributors Directory		
Sample and Hold Circuits			3398-1
	See also Data Acquisition listings		
SAR	See Successive Approximation listings		
Schmitt Trigger	Digital	CMOS	810-144
			837-46
		HNIL/HTL	852-35
			853-6
			852-53
		Special	890-1
		TTL	883-28
			886-148
SCIC			4975-2
SCR	Arrays		3309-1
	Control		3398-1
Screening	See Military Pages		

Function			Page-Line
S			**(Cont'd)**
SCSI			4975-2
			1465-23
SDLC	Interface		
		Transmitters-Receivers	2900-1
	Microprocessor		
		General	1465-23
		2650	1452-119
		8048	1456-2
		8080	1457-60
		8085	1457-279
		9900	1462-52
Security			
	EPROM		4975-2
Semicustom			
	Gate Arrays		4439-1
		Design Automation Tools	4975-2
	Hard Array Logic		4467-1
	Linear Arrays		4462-1
		Design Automation Tools	4975-2
	Programmable Logic		4467-1
		Design Automation Tools	4975-2
	Standard Cells		4478-1
		Design Automation Tools	4975-2
Sense Amplifiers			2899-1
Sensor	Air Flow		3398-1
	Image		3398-1
	Liquid Level		3398-1
	Moisture		3398-1
	Relative Humidity		3398-1
	See Detector listings		
	Temperature		3398-1
	Ultra Sonic Detector		3398-1
Sequencer			
	ECL		4975-2
	Programmable Logic		4467-1
	Timer		4975-2
	TTL		886-148
Serial Analog Delay			3398-1
Serial Receivers			2900-1
Serial Transmitters			2900-1
Servo	Circuits		3398-1
	Driver, Consumer		3327-127
	Servomechanism		4975-2
Shift Registers			
	Analog		3398-1
	Bucket Brigade		3398-1
	CCD		3398-1
	CMOS		834-146
	Dynamic		3854-1
	ECL III/Misc.		849-113

Function			Page-Line
Shift Registers			
	ECL 10K		847-124
	ECL 100K		849-35
	GaAs		851-16
	HNIL/HTL		852-101
	Static		3854-23
	TTL		881-9
			876-130
Shifter	Digital	TTL	886-148
	Level	See Translators	
	Microprocessor		
		EPIC	1449-113
	Multibit		
		Microprocessor, 10800	1449-97
Signal Processor			
	Analog	Real Time	3398-1
	DSP		4975-2
Slash Numbers			
	See Military Pages		
SMD Controller			1465-23
SMD Packages			
	See Surface Mount Directory		4975-2
Smoke Detector			3327-127
SO Packages			
	See Surface Mount Directory		4975-2
Software			
	See Design Automation listings		4975-2
Sonar			4975-2
Sound Circuits			
	TV		3324-45
Sound Generator			
	Consumer		
		Audio	3316-60
		Games	3327-109
	Microprocessor		1465-23
SPCC	Transmitters-Receivers		2900-1
SPDT			4975-2
Speaker Protection			
	Peak Power		4975-2
Speech Circuits			
	Consumer		3323-97
	Telephone		3377-1
Speed Control			
	Automotive		4975-2
Speedometer			
	Automotive		3319-109
SPST			4975-2
SRAM	See Memory listings		
SSB Detector			
	Radio		3321-15
SSDA	Microprocessor		
		6800	1453-142
Standard Cells			4478-1

Function			Page-Line
S			**(Cont'd)**
State Machine			4975-2
	Programmable Logic		4975-2
STDbus			2039-1
Stepper Motor Controller			
Stereo	AM		3321-15
	FM		3321-119
	TV		4975-2
Stopwatch			3320-48
String Proximity Computer			4975-2
			4975-2
Strobe Light			
	Camera		3320-11
Subscriber Line Interface			3377-1
Successive Approximation Register			
	CMOS		837-46
	TTL		886-148
Suffixes			
	See Part Number Guide		
Support			
	See Microcomputer Board listings		
Surface Mount			
	See Surface Mount Directory		4975-2
Switch	Byte-Synchronous		
		Microprocessor, 6800	1453-142
Switched Capacitor Array			3398-1
Switches			
	Analog	Drivers	2828-103
		with Drivers	2822-1
		without Drivers	2828-3
	Bridge Transducer		4975-2
	Bus		886-148
	Cassette		3323-150
	Crosspoint		2829-10
		Digital Time/Space	3377-1
		Digital Time/Space 6800	1453-142
		Telecom	3377-1
	Darlington		2894-1
			3309-1
	Data Path		806-1
		Macrologic	1448-11
	DC Controlled		
		Consumer	3327-127
	Frequency		3398-1
	Hall Effect		
		Digital, Special	890-1
		Linear	3398-1
	Light Activated		3398-1
	Multiplexers		2829-10
	Proximity		3327-127
	Threshold		3398-1
Switches			
	Touch	Digital, CMOS	837-46
		Linear	3327-127
	TV		4975-2
	Video		3327-127
Switching Regulator Circuits			3395-58
Synchro Systems			4975-2
			3398-1
Synchronizer			
	Pulse		886-148
Synchronous Communications			2900-1
Synchronous Serial Data			
	Adapter		4975-2
Synthesizers			
	AM		3321-15
	AM/FM		3375-1
	CB Radio		3320-40
	Divider		3375-1
	FM		3321-59
	General		3375-1
	Mobile Radio		3375-1
	Music		4975-2
	Speech		3323-97
	TV		3324-45
Systems			
	Data Acquisition		4975-2
	Microcomputer Development		1817-20
	Microprocessor Components		
		See Microprocessor, System Components	
	Resolver		3398-1
S-100 Bus			2038-8
T			
Tachometer Circuit			3327-127
Tape Deck Circuits			3323-150
Tape Recorder Circuits			
	Audio		3323-150
	Video		3324-40
Telecom			3377-1
Telecommunication Circuits			3377-1
Telephone Circuits			3377-1
Teleset			3377-1
Teletex			3377-1
Teletext Circuits			3324-45
Television Circuits			3324-45
Temperature			
	Alarm Circuits		3398-1
	Controlled Transistors		3398-1
	Set Point Controller		3398-1
	Transducers		3398-1

Function			Page-Line
T			**(Cont'd)**
Terminator			
	Digital	CMOS	837-46
		ECL 10K	848-1
Test Pattern Generator			
	TV		3324-45
Text Processor			
	Microprocessor		
		General	1465-23
		8086/8088	1461-58
Thermal			
	Converter		3398-1
	Print Head Driver		2894-1
Threshold Switch			3398-1
TI Professional Bus			2042-48
Timers	Analog		3383-1
	Counter/Timer		890-1
	Delayed		3383-1
	Digital Delay		837-46
	Extended Time		3383-1
	Microprocessor		
		6800	1453-142
	Microwave Oven		3383-1
TM990 Bus			2042-50
Toggle Frequency			
	Gate Arrays		
		Design Automation Tools	4975-2
Tone Decoders			
	PLL Circuits		3375-1
	Telecom		3377-1
	Traffic Signals		3398-1
Tone Detector			
	Call Progress		3377-1
Tone Generator			
	Microprocessor		
		1800	1451-101
	Music		3320-137
	Telecom		3377-1
Tone Ringer			3377-1
Tools	See Design Automation listings		4975-2
Top Octave Generator			3320-137
Touch Input			
	Microprocessor		
		TMS1000	4975-2
Touch Switches			
	See Switch listings		4975-2
Track and Hold Circuits			3398-1
Traffic Camera			
	TV		3324-45
Traffic Information			
	Automotive		3319-109
	Control System		3398-1
Traffic Light Controller			3327-127

Function			Page-Line
Traffic Signal			
	Tone Decoder		3398-1
Transceivers			
	Addressable		837-46
	Backplane		886-148
	Bus	CMOS	837-46
		ECL 10K	848-1
		ECL 100K	849-50
		See also Line Circuits	883-28
			837-46
		TTL	883-28
	Carrier Current		3398-1
	ECC		2888-1
	Line	See Line Circuits	2888-1
			2891-15
	Microprocessor		
		NSC800	1460-24
		10800	1449-97
		8000	1463-6
	Optical		3327-127
	Serial		2900-1
	Telecom		3377-1
	Ultrasonic		3322-153
Transducers			
	Pressure		3398-1
	Temperature		3398-1
Transistor			
	Arrays		3309-1
	Blowout Resistant		3398-1
	Matched		4975-2
	Temperature Controlled		3398-1
Translators			
	CMOS		837-32
	ECL 10K		847-132
	ECL 100K		849-41
	HNIL/HTL		852-104
	TTL		886-126
	Various		2894-1
Transmitters			
	Fiber Optic		3398-1
	IR		3377-1
			3322-153
	Modem		4975-2
	Remote Control		3322-153
		Digital, CMOS	4975-2
	Serial		2900-1
	Two Wire		3306-1
Transversal			4975-2
			3398-1

Function			Page-Line
T			**(Cont'd)**
Tree	Wallace		
		DSP	4975-2
		ECL 100K	848-59
		TTL	854-1
TRIAC Control			3398-1
Trigger	See Schmitt Trigger listings		
	Zero Crossing		3398-1
Tuner	AM		3321-15
	AM/FM		3321-59
	FM		3321-119
	TV		3324-45
	Voltage Stabilizer		3327-127
TV Circuits			3324-45
T1			3377-1
T1-D2			3377-1
T1-D3			3377-1
U			
UART	Microprocessor		
		NSC800	1460-24
		1600	1451-90
		1800	1451-101
		2650	1452-119
		6100	1462-105
		68000	1463-109
		8000	1463-6
		8080	1457-60
		8085	1457-279
		8086/88	1461-58
		9900	1462-52
	Transmitters-Receivers		2900-1
Ultrasonic Circuits			3322-153
UNIBUS			4975-2
Universal			
	Transmitters-Receivers		2900-1
UPC/EAN Scanner			4975-2
UPI Circuits			
	Microprocessor		
		General	1465-23
		8048	1456-2
		8080	1457-60
	See Microprocessor System Components		
USRT	Transmitters-Receivers		2900-1
USYNRT			
	Transmitters-Receivers		2900-1
u255 Law			
	Linear		3377-1
V			
V.21			3377-1
V.22			3377-1

Function			Page-Line
V.23			3377-1
V.24			2881-1
V.26			2881-1
			3377-1
V.27			4975-2
V.28			2881-1
V.29			4975-2
Vacuum Fluorescent Driver			
	See Display Driver listings		
VCO	Consumer		3320-137
	ECL III		850-0
	Generators		
		Function	3375-1
		Waveform	3375-1
	PLL Circuits		3375-1
	TTL		886-148
	V to F		3398-1
VERSAbus			2043-8
Video ADC			2832-2
Video Amplifiers			
	See also Amplifier listings		3306-1
Video Circuits			
	CRT		1465-23
	TV		3324-45
Video DAC			2849-1
Video Disk			
	TV		3324-45
Video Game Circuits			3327-109
Video Tape Recorder			3324-40
Videotex			4975-2
Videotext Circuits			1465-23
Viterbi			4975-2
VMEbus			
	Boards		2043-32
	Controller		
		Microprocessor, 68000	1463-109
Vocabulary			4975-2
Voltage Alarm			3398-1
Voltage Doubler			3398-1
Voltage Inverter			3398-1
Voltage Limiter			
	Telecom		3377-1
Voltage Monitor			3398-1
Voltage Reference			3398-1
Voltage Regulators			
	ac-dc		4975-2
	Adjustable		
		Dual	3395-41
		Negative	3394-48
		Positive	3392-92
	Automotive		3319-109

MSG FUNCTION INDEX

Function			Page-Line
V			**(Cont'd)**
Voltage Regulators			
	Fixed	Dual	3392-67
		Negative	3389-122
		Positive	3384-1
	Switching Regulator Circuits		3395-58
VTR	See Video Tape Recorder		
W			
Wallace Tree			
	DSP		4975-2
	ECL 100K		848-59
	TTL		854-1
Watch	Consumer		3320-48
	Digital	CMOS	834-98
Waveform Generators			3375-1
Winchester			
	Amplifiers		4975-2
Winchester Circuits			1465-23
Window Discriminator			3398-1
Workstations			
	See Design Automation listings		4975-2
X			
X.25			2900-1
Z			
Zero Crossing Triggers			3398-1

Last Page This Section, Next Page 51

SECTION	PRODUCTS IN SECTION
Digital	Arithmetic functions, buffers/inverters, counters, decoders, drivers, flip-flops, gates, latches, memories, multiplexers, multivibrators, oscillators/dividers, shift registers, translators.
Military	Military-commercial and commercial-military cross-references; QPL-38510/xx list; military ICs.
Microprocesser	Microprocessors, microcomputers, and microprocessor system components.
Microprocessor Development Systems	Systems covered range from simple, single-user, text-editing stations to multi-user computers dedicated to software development.
Microcomputer Support Boards	Boards with functions and peripheral controllers.
Interface	Analog switches, analog-to-digital converters, digital-to-analog converters, display converters, display drivers, error checking circuits, keyboard encoders-decoders, drivers, sense amplifiers, and transmitters/receivers.
Linear	Special-purpose amplifiers, arrays, comparators, consumer circuits, followers, operational amplifliers, phase locked loop circuits, telecommunication circuits, timers, voltage regulators, and special functions.
Memory	Character generators, code converters, FIFOs, LIFOS, E^{2}PROMs, PROMs, RAMs, ROMs and shift registers.
Custom/ Semicustom	Custom/Semicustom linear and digital gate arrays, standard cells, programmable logic arrays (PLAs), and all compatible design tools.
Design Automation	Design Automation interrelated tables showing relationships among workstations, computers, software, semicustom manufacturers and CAE/CAD providers.
SMD Packages	Surface Mount Directory from base device numbers to surface mount packages and suppliers.
Alternate Source Directory	Alternate Source Directory... Industry-wide alternate source cross reference pin-for-pin and functional equivalents to available ICs.

SIX KEY PHASES OF NEW SYSTEM DEVELOPMENT

Planning

A good design

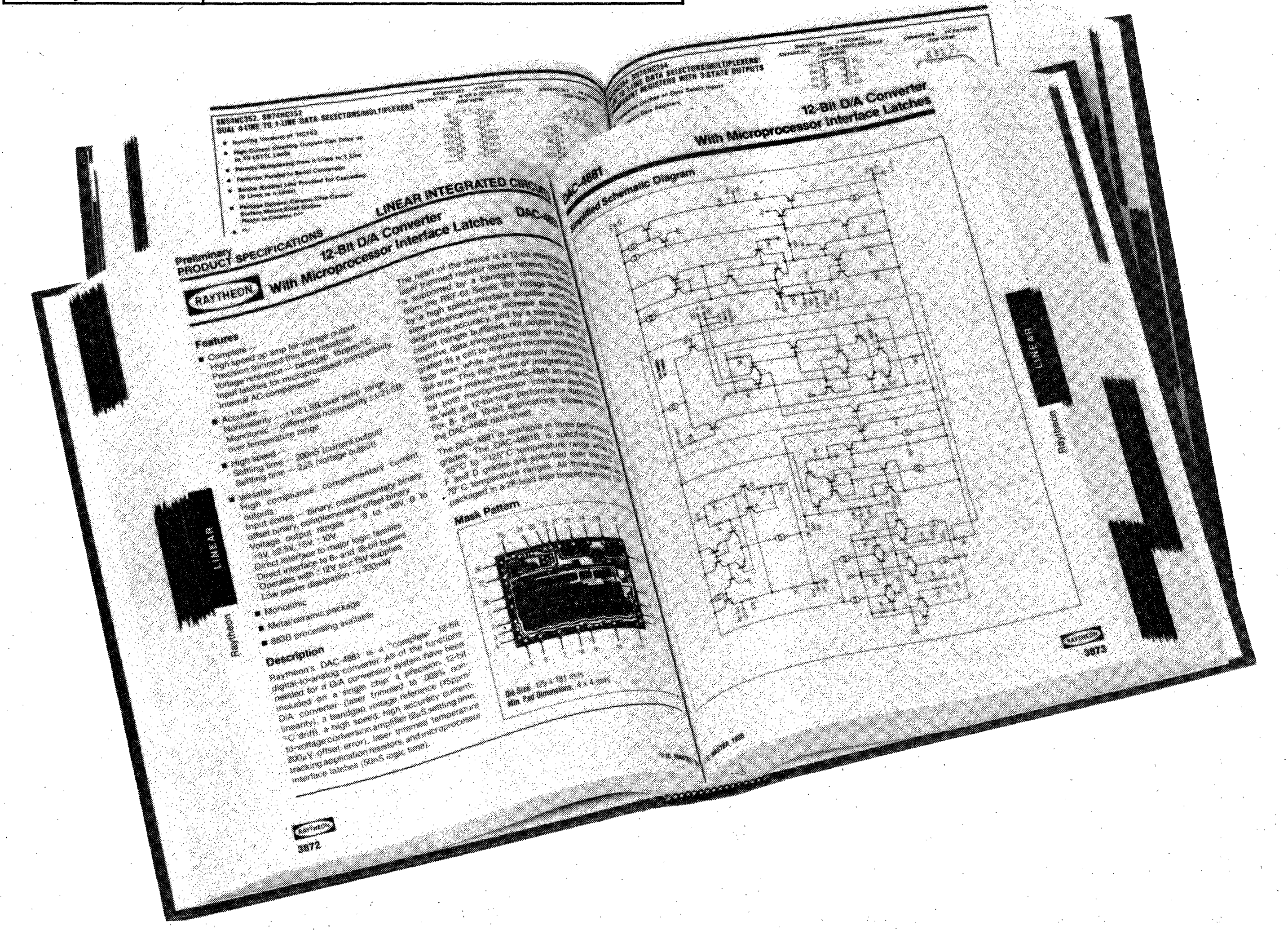
Preliminary PRODUCT SPECIFICATIONS
LINEAR INTEGRATED CIRCUITS
12-Bit D/A Converter With Microprocessor Interface Latches
RAYTHEON
DAC-4881
Features
Mask Pattern
Description
Simplified Schematic Diagram
LINEAR
Raytheon
3872
3873

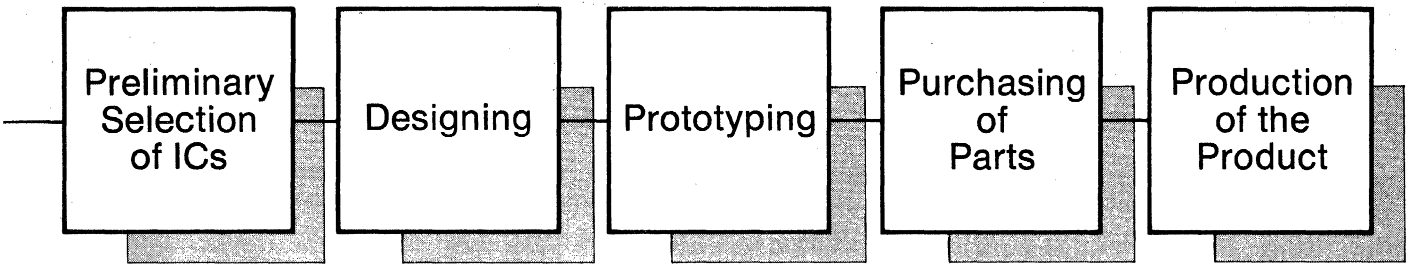

is "mastered" early.

The best time for an engineer to pick the integrated circuits that will go into his next design is at an early stage in the design process when the engineer's plans are still flexible enough to take full advantage of the features selected.

There is a point in the early phases of every design when engineers focus on selecting integrated circuits. They examine specifications, weigh relative strengths and weaknesses of various devices, and choose the field of candidates. This critical time in the design cycle when designers want to be sure the right devices are in serious contention for their applications.

This is when the engineer reaches into his technical reference library. Of the material on his shelves, **IC MASTER** is the only reference source that has been especially prepared for this moment.

The engineer can look up each precise function that he needs and see all of the devices—and their manufacturers—that might satisfy his requirements. He sees this information for all manufacturers, not just for advertisers. But if an IC maker has chosen to include technical data for his products in **IC MASTER**, the engineer sees each index listing for that manufacturer in **bold face type** accompanied by the **page number** on which the data appears; the engineer can then turn immediately to the advertiser's technical data to see if the device fits his needs.

Next time, begin with the MASTER...where engineering design begins!

IC MASTER

WHAT'S NEW IN IC MASTER

DON'T MISS THE EXPANDED CUSTOM/ SEMICUSTOM IC SECTION

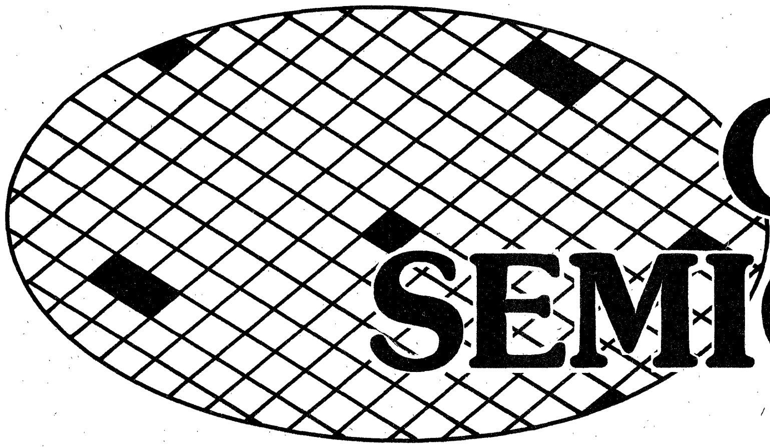

Lists software design tools available for Programmable Logic Devices, Gate Arrays, Standard Cells, and Linear and Linear/ Digital Arrays. Major macros in VLSI/LSI Macrocell Libraries are listed by source.

Volume II, page 4401

WHAT'S NEW IN IC MASTER

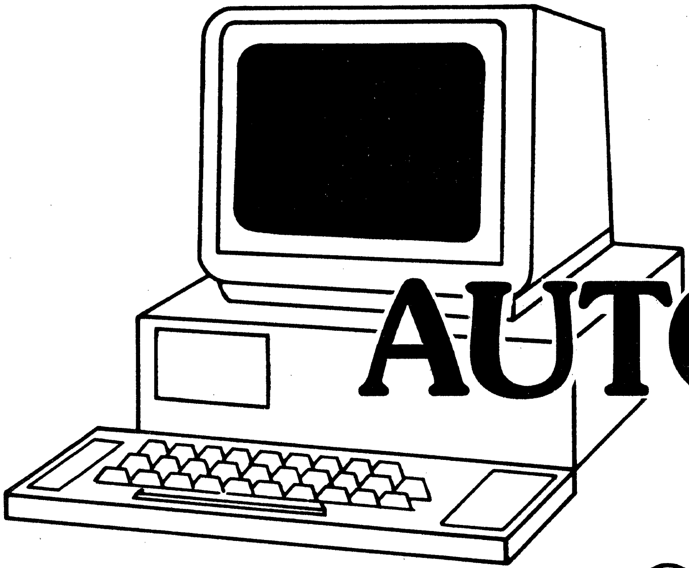

DON'T MISS THE NEW DESIGN AUTOMATION IC SECTION

Quick and easy way to determine relationships between workstations, computers, software, semicustom manufacturers and CAE/CAD providers.

Volume II, page 4901

IC MASTER BELONGS ON YOUR BOOKSHELF

If you don't have your own IC MASTER, you can obtain your own copy by ordering now. Write for your own copy or order by telephone as described below.

IC MASTER is a two-volume set of technical data carefully organized to direct the engineer to the integrated circuits and related products that are closest to his specific needs. It is the surest way to find the optimum device to answer an engineering design requirement. By ordering now, you won't have to borrow or search for IC MASTER the next time you need it.

Typical Use of IC MASTER

Can an engineer find out who makes a 256K dynamic RAM with an access time of 120 nanoseconds or faster in less than 30 seconds?
He can if he turns to the Memory section of IC MASTER and looks for the 256K organization (words and bits per word) that he needs.
Because each device is listed in order of access time, he can easily determine the devices that satisfy his speed requirements.

In the United States only:

You can order IC MASTER simply by charging it to your VISA or Master Card credit card. To place your order (USA only) call now: (408) 249-6800/(516) 227-1300. To order outside the USA, see list of authorized IC MASTER distributors on page 1471 of Vol. I.

ORDER YOUR COPY NOW

WHAT'S NEW IN IC Updates

DON'T MISS THE IC UPDATES

The updates keep your IC Master current the year 'round.

Look for them in the

SPRING, SUMMER and FALL

and remember our year 'round immediate response system toll free number for up-to-date product information: **800 443-0100 (EXT.) 518**

WHAT'S NEW IN IC MASTER

DON'T MISS THE NEW SURFACE MOUNT DEVICE IC SECTION

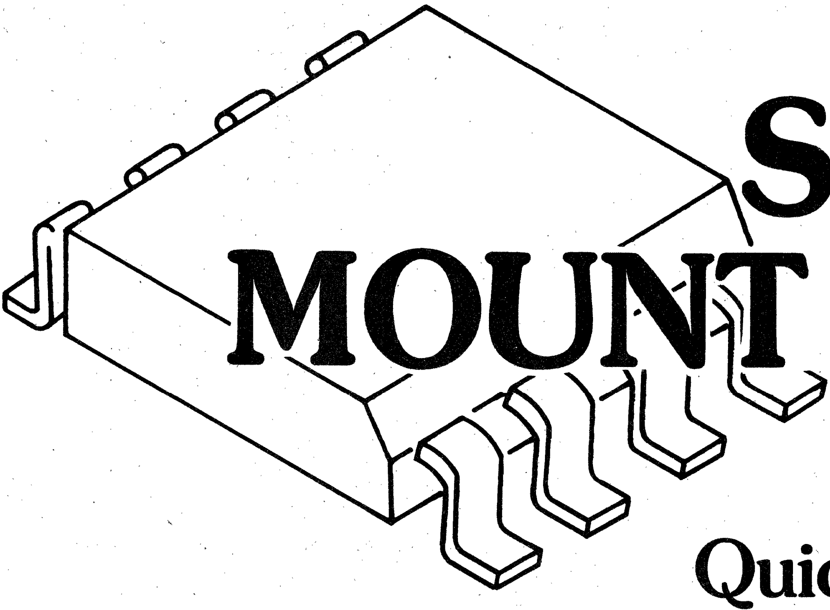

Quickly shows you by base number and package, what surface mount devices are available and from which manufacturers.

Volume II, Page 5201

PART NUMBER INDEX

This index shows the page and line on that page where each device appears in the Master Selection Guide. The devices are arranged in order by basic numbers so that similarly numbered devices from different manufacturers are grouped together. Basic numbers for microcomputer boards and microprocessor development systems are also included. BOLD FACED listings lead to manufacturers' supplied data sheets. Use this index to locate key operational characteristics, application notes, and device data whenever you have a device number. This is an Index of all parts with identical basic part numbers, regardless of their function. It is not an Alternate Source Directory.

HOW TO USE THE PART NUMBER INDEX

This Part Number Index is arranged in alphanumeric sequence, ignoring the manufacturers' prefixes and suffixes and using the basic part numbers. This basic number sequence is sorted by reading the digits from **left** to **right,** assuming that letters come before numbers. (As an example, these numbers would appear in the following order: 5301, 531, 54LS01, 54139, 555.) Under each basic number, manufacturers' names and full part numbers are listed. The page references in **BOLD FACE** lead to manufacturers' data and application notes. Short editorial descriptions of all Active Applications Notes available from every manufacturer are indicated by a ¶ sign.

The arrangement of this index by base number gives you several advantages. It allows you to find a device by its basic number whether or not you know the name of the manufacturer or the manufacturer's prefixes. Also it groups similar devices together so that when you are looking for data you can quickly determine if the data has been provided in the book by any of the manufacturers and where that data is. Similarly it groups any references to application notes close together so that you do not need to guess which manufacturer might publish application notes on a device before you can locate them.

Once you become familiar with the alphanumeric numbering sequence, you'll find that this index is easy to use.

Base Number	Source	Device	Page-Line
0	ITT	ZSY0-7	3377-42
	Vesta	ipc-DISK-0	2039-22
	WinSystems	LPM-SPI0A	2040-57
	Mitel	EL00	4450-39
	Wintek	**MCS00**	**★2118**
			2037-19
		MGP00	**★2118**
			2037-22
		MPB00	2037-38
	GI	SPR000	3323-114
0001	National	LH0001	¶ 407-1
0002	**Elantec**	**ELH0002**	**★3537**
			3306-25
		ELH0002C	**★3537**
			3306-26
	Micra	MC0002	3306-28
		MC0002C	3306-29
	National	LH0002	3306-30
			¶ 404-6
		LH0002C	3306-31
	TeledyneC	CLH0002	3306-32
0003	Micra	MC0003	3350-4
	National	LH0003	3330-118
			3350-2
		LH0003C	3350-3
0004	Micra	MC0004	3345-2
	National	LH0004	3331-83
			3345-3
		LH0004C	3331-84
			3345-22
0005	National	LH0005	3330-132
			3357-56
		LH0005A	3330-133
			3346-213
		LH0005C	3330-137
			3357-57
0006	**Elantec**	**EDH0006**	**★3537**
			2898-139
	Micra	MC0006	2898-140
	National	DH0006	2898-141
		DH0006C	2898-142
0007	National	MH0007	2892-54
			¶ 398-13
		MH0007C	2892-55
0008	**Elantec**	**EDH0008**	**★3538**
			2898-143
	Micra	MC0008	2898-144
	National	DH0008	2898-145
	OEI	AH0008	3357-153
0009	National	MH0009	¶ 398-13
001	**Inmos**	**IMSC001**	**★1637**
			1465-21
	Intel	iSBCCSM/001	2035-41
		iSBCLNK/001	2036-1
	RCA	GP001	¶ 368-10
			¶ 374-1
			¶ 376-10
		GP001AD	1449-113
	Solitron	CJCA001	3394-27
		CJSE001	3388-65
0010	**AD**	**HTS-0010**	**★3138**
			3404-166
	OEI	AH0010C	3329-49
		AH0010F	3329-50
0011	National	DH0011A	2898-146
0012	National	MH0012	¶ 398-13
0013	National	MH0013	¶ 398-13
	OEI	AH0013CA	3307-82
		AH0013CB	3307-83
		AH0013MA	3307-84
0014	National	AH0014	2827-75
		AH0014C	2827-76
		LH0014	¶ 401-15
0015	National	AH0015	2824-117
		AH0015C	2824-118
0017	National	DH0017C	2898-147
0018	National	DH0018C	2898-148
0019	National	AH0019	2827-73
		AH0019C	2827-74
		LH0019	¶ 401-15
002	FujitsuA	FBM-A002	2046-39
	Inmos	**IMSC002**	**★1637**
			1464-73
			1465-20
	Solitron	CJCA002	3395-30
		CJSE002	3392-2
0020	National	LH0020	3330-134
			3346-154
		LH0020C	3330-135
			3355-45
0021	**Elantec**	**ELH0021**	**★3537**
			3330-86
			3346-224
		ELH0021C	**★3537**
			3330-90
			3355-48
	Micra	MC0021	3330-74
			3346-225
		MC0021C	3330-91
			3355-49
	National	LH0021	3330-75
			3346-226
		LH0021C	3330-92
			3355-50
0022	National	LH0022	3350-9
			¶ 407-7
		LH0022C	3354-44
			¶ 407-7
0023	National	LH0023	3404-53
		LH0023C	3404-54
0024	Micra	MC0024	3331-28
			3334-240
			3350-49
		MC0024C	3331-46
			3334-241
			3356-53
	National	LH0024	3331-29
			3334-242
			3350-50
		LH0024C	3331-47
			3334-243
			3356-54
0025	AD	HTS-0025	3403-164
	National	DS0025	2892-113
			¶ 435-9
		DS0025C	2892-114
0026	Fairchild	0026	2892-111
	Motorola	MMH0026C	2892-112
	National	DS0026	2892-115
			¶ 435-9
		DS0026C	2892-116
003	FujitsuA	FBM-A003	2046-38
	MCE	MT003	837-69
	National	DH003C	¶ 402-15
	Solitron	CJSE003	3388-66
0030	Sanyo	STK0030	3318-105
0032	**AD**	**ADLH0032**	**★3508**
			3331-23
			3334-238
			3352-18
		ADLH0032C	**★3508**
			3331-24
			3334-239
			3357-125
	Elantec	**ELH0032**	**★3537**
			3331-30
			3334-233
			3352-15
		ELH0032C	**★3537**
			3331-31
			3334-234
			3352-16
	Micra	MC0032	3331-32
			3334-235
			3352-17
		MC0032C	3331-33
			3334-236
			3357-123
	National	LH0032A	3334-245
		LH0032AC	3354-43
		LH0032C	3331-34
			3334-237
			3357-124
	Reticon	RT0032A	3404-100
	TeledyneC	CLH0032	3352-29
	TeledyneP	TP0032	3352-8
0033	**AD**	**ADLH0033**	**★3508**
			3329-3
			3331-10
		ADLH0033C	**★3508**
			3329-12
			3331-12
			(Continued)
0033	**Elantec**	**ELH0033**	**★3537**
			3329-4
		ELH0033C	**★3537**
			3329-13
	Maxim	LH0033	3329-10
		LH0033A	3329-2
		LH0033AC	3329-19
		LH0033C	3329-22
	Micra	MC0033	3329-5
		MC0033C	3329-14
	MicroPwr	**MP0033**	**★3607**
			3329-6
	National	LH0033	3329-7
		LH0033C	3329-15
	TeledyneP	TP0033	3329-16
		TP0033-80	3329-8
		TP0033-HR	3329-9
0034	Micra	MC0034	886-134
		MC0034C	886-135
	National	DH0034	886-136
		DH0034C	886-137
0035	National	DH0035	891-106
			¶ 402-15
			3401-71
		DH0035C	891-107
			3401-72
0036	National	LH0036	3306-105
		LH0036C	3306-106
0037	National	LH0037	3306-107
		LH0037C	3306-108
0038	National	LH0038	3306-109
		LH0038C	3306-110
004	Solitron	CJSE004	3392-3
0040	Sanyo	STK0040	3318-106
00401	DDC	ADC00401	2839-43
00403	DDC	ADC-00403-102	2843-18
		ADC-00403-103	2844-11
		ADC-00403-202	2843-19
		ADC-00403-203	2844-12
00404	DDC	ADC-00404-102	2843-20
		ADC-00404-103	2844-13
		ADC-00404-202	2843-21
		ADC-00404-203	2844-14
0041	**Elantec**	**ELH0041**	**★3537**
			3330-102
			3346-221
		ELH0041C	**★3537**
			3330-103
			3355-44
	Micra	MC0041	3330-104
			3346-222
		MC0041C	3330-105
			3355-41
	National	LH0041	3330-106
			3346-223
		LH0041C	3330-107
			3355-42
0042	AD	AD0042C	3357-147
	Intersil	LH0042	3357-145
		LH0042C	3357-148
	National	LH0042	3357-146
		LH0042C	3357-149
			¶ 407-7
0043	National	LH0043	3404-55
		LH0043C	3404-56
0044	National	LH0044	3341-56
			3337-48
		LH0044A	3332-28
			3335-47
		LH0044AC	3332-29
			3335-48
		LH0044B	3341-12
			3337-47
		LH0044C	3341-57
			3339-8
0045	National	LH0045	3308-74
		LH0045C	3308-75
005	Solitron	CJSE005	3388-67
0050	**Fairchild**	**FGE0050**	**★4621**
			4442-14
	Sanyo	STK0050	3318-107
0052	National	LH0052	3332-33
			3340-85
			¶ 407-7
		LH0052C	3343-52
			¶ 407-7
0053	National	LH0053	3404-57
		LH0053C	3404-58
0055	Sanyo	STK0055	3318-108
0056	National	DS0056	2892-117
		DS0056C	2892-118
0059	Sanyo	STK0059	3318-109
006	MCE	MT006	837-76
	Solitron	CJSE006	3392-4
0060	Sanyo	STK0060	3318-110
00600	Harris	HGA-C00600RH	4446-35
			4446-36
0061	National	LH0061	3330-94
			3350-32
		LH0061C	3330-95
			3357-77
0062	National	LH0062	3351-8
		LH0062C	3357-118
0063	Maxim	LH0063	3329-38
		LH0063C	3329-44
	Micra	MC0063	3329-37
	National	LH0063	3329-39
		LH0063C	3329-45
0069	National	DH0069	2898-130
007	Solitron	CJCA007	3394-28
0070	LinearTech	LH0070	3403-16
	National	LH0070	3403-47
	Sanyo	STK0070	3318-111
0071	National	LH0071	3403-65
		LH0071-0	3403-66
		LH0071-1	3403-67
		LH0071-2	3403-68
0075	National	LH0075	3386-93
			3392-105
		LH0075C	3392-106
0076	National	LH0076	3394-52
		LH0076C	3394-53
008	Solitron	CJCA008	3395-31
	TRW-LSI	MPY008	843-40
		MPY008H	855-154
		MPY008H-1	855-155
0080	Sanyo	STK0080	3318-112
	Sharp	LH0080	1460-71
			1429-21
		LH0080A	1460-72
			1429-22
0081	Sharp	LH0081	1460-125
		LH0081B	1460-126
0082	GI	ER0082	3811-41
			¶ 433-7
	National	LH0082	3306-63
		LH0082C	3306-64
	Sharp	LH0082	1460-94
		LH0082A	1460-95
		LH0082B	1460-96
0083	Sharp	LH0083	1460-111
		LH0083A	1460-112
0084	National	LH0084	3306-120
		LH0084C	3306-121
	Sharp	LH0084	1460-139
		LH0084A	1460-140
0085	Sharp	LH0085	1460-141
		LH0085A	1460-142
0086	National	LH0086	3306-122
		LH0086C	3306-123
	Sharp	LH0086	1460-143
		LH0086A	1460-144
009	Solitron	CJSE009	3389-46
0091	National	LH0091	3403-147
			¶ 421-13
		LH0091C	3403-148
0094	National	LH0094	3400-115
		LH0094C	3400-116
01	**Apex**	**PA01**	**★3525**
			3348-40
			3330-56
			3357-91
	GenMicro	GMSV01	2044-33
	HybridSys	HSREF01	3403-2
	IXYS	XSEQ01	3404-111
	LinearTech	REF-01	3403-18
		REF-01A	3403-19
		REF-01C	3403-20
		REF-01E	3403-21
		REF-01H	3403-22
	LogicDev	LRF01C	831-91
		LRF01M	831-92
			(Continued)

Arranged alphanumerically from left to right.

Base Number	Source	Device	Page-Line
01	Maxim	REF-01	3403-33
		REF-01A	3403-34
		REF-01C	3403-35
		REF-01D	3403-36
		REF-01E	3403-37
		REF-01H	3403-38
	MicroPwr	DAC-01	2849-24
		DAC-01B	2849-25
		DAC-01C	2849-26
		DAC-01D	2849-27
		DAC-01F	2849-28
		DAC-01H	2849-29
		MPOP-01	★ **688**
			★ **3607**
			3346-81
		MPOP-01A	★ **688**
			★ **3607**
			3343-33
		MPOP-01C	★ **688**
			★ **3607**
			3353-11
		MPOP-01E	★ **688**
			★ **3607**
			3346-82
		MPOP-01F	★ **688**
			★ **3607**
			3346-83
		MPOP-01G	★ **688**
			★ **3607**
			3353-12
		MPOP-01H	★ **688**
			★ **3607**
			3343-34
		MPREF-01	★ **688**
			★ **3607**
			3403-39
		MPT-01A	★ **3605**
			3309-124
		MPT-01G	★ **3605**
			3309-125
	MicroCompSys		
		MSI-VS01	2031-26
	Motorola	MCH-01	3808-9
	PMI	**AMP-01**	★ **3639**
			3306-78
			3348-114
			3330-130
		AMP-01A	★ **3639**
			3337-38
		AMP-01B	★ **3639**
			3339-2
		AMP01E	3337-39
		AMP01F	3339-3
		CMP-01	3312-17
			¶ 386-8
			¶ 386-9
		CMP-01C	3312-35
		CMP-01E	3312-18
		DAC-01	★ **3637**
			2849-36
			¶ 390-14
		DAC-01A	★ **3637**
			2849-23
		DAC-01B	★ **3637**
			2849-37
		DAC-01C	★ **3637**
			2849-38
		DAC-01D	★ **3637**
			2850-2
		DAC-01F	★ **3637**
			2849-39
		DAC-01H	★ **3637**
			2849-40
		GAP-01A	3398-65
		GAP-01B	3398-66
		GAP-01E	3398-67
		GAP-01F	3398-68
		MAT-01	3309-103
			¶ 420-15
		MAT-01A	3309-104
		MAT-01G	3309-105
		OP-01	★ **3636**
			3343-35
		OP-01C	★ **3636**
			3353-13
		OP-01G	★ **3636**
			(Continued)
01	PMI	OP-01G	3353-14
		OP-01H	★ **3636**
			3343-36
		PKD-01	3401-64
		PKD-01A	3401-65
		PKD-01B	3401-66
		REF-01	★ **3639**
			3403-51
			¶ 386-4
		REF-01A	★ **3639**
			3403-52
		REF-01C	★ **3639**
			3403-53
		REF-01E	★ **3639**
			3403-54
		REF-01H	★ **3639**
			3403-55
		SW-01B	2824-101
		SW-01F	2824-102
	Raytheon	**REF-01**	★ **3652**
			3403-58
		REF-01A	★ **3652**
			3403-59
		REF-01C	★ **3652**
			3403-60
		REF-01D	★ **3652**
			3403-61
		REF-01E	★ **3652**
			3403-62
		REF-01H	★ **3652**
			3403-63
	SiliconSys	SSI SC-01	3323-139
	Supertex	HV01	2874-49
		VC01	2898-79
		VF01	2896-36
	Votrax	SC-01	3323-131
	WinSystems	LPM-PI01A	2041-40
		MCM-PI01	2040-62
010	Intel	iSBC010CX	2032-10
		iSBC010EX	2032-11
	Solitron	CJSE010	3392-43
0100	Codata	CPU0100	2027-32
0101	**Elantec**	**ELH0101**	★ **3537**
			3330-76
			3357-38
		ELH0101A	★ **3537**
			3330-77
			3346-197
		ELH0101AC	★ **3537**
			3330-78
			3346-198
		ELH0101C	★ **3537**
			3330-79
			3357-39
	Maxim	LH0101	3330-69
			3357-34
		LH0101A	3330-70
			3346-199
		LH0101AC	3330-71
			3346-200
		LH0101ACK	3346-195
		LH0101AK	3346-196
		LH0101C	3330-72
			3357-35
	National	LH0101	3330-80
			3357-36
		LH0101A	3330-81
			3346-193
		LH0101AC	3330-82
			3346-194
		LH0101C	3330-83
			3357-37
0107	Hughes	HCTR0107	890-33
011	Solitron	CJSE011	3389-47
	TI	TL011	¶ 418-5
012	Intel	iSBC012B	2032-35
		iSBC012C	2032-34
		iSBC012CX	2032-5
		iSBC012EX	2032-33
	IMI	MPY012-1	806-79
		MPY012-5	806-80
	PlesseyMicro	PME 012D	2045-50
	Plessey	PME-012D	2046-2
	Solitron	CJSE012	3392-44
	TI	TL012	¶ 418-5
			(Continued)
012	TRW-LSI	MPY012	843-58
		MPY012H	855-159
01200	Harris	HGA-C01200RH	4446-38
			4446-39
013	Solitron	CJSE013	3389-48
0131	ThomsonCSF	TDB0131	3405-88
0132	National	LH0132	3352-28
		LH0132C	3357-40
0134	ThomsonCSF	TDC0134	3404-159
0135	ThomsonCSF	TDB0135	3404-158
0136	ThomsonCSF	TDB0136	3402-77
		TDC0136	3402-78
014	Solitron	CJSE014	3392-45
	TI	TL014	¶ 418-5
0140	National	AH0140	2827-24
		AH0140C	2827-25
0149	ThomsonCSF	TDB0149	3372-32
		TDC0149	3371-32
0150	Sanyo	STK0150	3318-113
0159	ThomsonCSF	TDA0159	3328-31
016	GI	SPR016	3849-34
	TRW-LSI	MPY016	843-75
		MPY016H	855-162
		MPY016K	855-163
		MPY016K-1	855-164
0161	ThomsonCSF	TDA0161	3328-32
0162	ThomsonCSF	TDA0162	3328-33
0165	Harris	HD0165	¶ 399-18
017	Solitron	CJSE017	3385-120
018	Solitron	CJSE018	3390-97
019	Solitron	CJSE019	3385-121
01C50	Calmos	CA01C50	1457-59
			1457-119
			1457-305
			1457-441
02	**Apex**	**PA02**	★ **3525**
			3357-27
		PA02A	★ **3525**
			3346-177
		PA02M	★ **3525**
			3357-26
	Brachman	MMC/02	2013-16
		MMC/02ICE	2037-8
		MSB/02PRT	2037-40
		MSB/02SMB	2037-34
		MSB/02VID-1	2037-6
	LinearTech	REF-02	3402-88
		REF-02A	3402-89
		REF-02C	3402-90
		REF-02D	3402-91
		REF-02E	3402-92
		REF-02H	3402-93
	Maxim	REF-02	3402-94
		REF-02A	3402-95
		REF-02C	3402-96
		REF-02D	3402-97
		REF-02E	3402-98
		REF-02H	3402-99
	MicroPwr	**MPOP-02**	★ **688**
			★ **3607**
			3346-85
		MPOP-02A	★ **688**
			★ **3607**
			3343-9
		MPOP-02B	★ **688**
			★ **3607**
			3353-18
		MPOP-02C	★ **688**
			★ **3607**
			3346-86
		MPOP-02D	★ **688**
			★ **3607**
			3353-19
		MPOP-02E	★ **688**
			★ **3607**
			3343-10
		MPREF-02	★ **688**
			★ **3607**
			3402-100
		MPREF-02A	3402-101
		MPREF-02C	3402-102
		MPREF-02D	3402-103
		MPREF-02F	3402-104
		MPREF-02H	3402-105
		MPT-02A	★ **3605**
			3309-126
			(Continued)
02	**MicroPwr**	**MPT-02B**	★ **3605**
			3309-127
		MPT-02E	★ **3605**
			3309-128
		MPT-02F	★ **3605**
			3309-129
	NCR	NCRCX02	1453-53
	PMI	CMP-02	3312-15
			¶ 429-11
		CMP-02C	3312-34
		CMP-02E	3312-16
		DAC-02AC	★ **3637**
			2859-62
		DAC-02BC	★ **3637**
			2859-63
		DAC-02CC	★ **3637**
			2859-65
		DAC-02DD	★ **3637**
			2859-69
		MAT-02A	★ **3639**
			3309-130
		MAT-02B	★ **3639**
			3309-131
		MAT-02E	★ **3639**
			3309-132
		MAT-02F	★ **3639**
			3309-133
		OP-02	★ **3636**
			3346-87
		OP-02A	★ **3636**
			3343-12
		OP-02B	★ **3636**
			3353-20
		OP-02C	★ **3636**
			3346-88
		OP-02D	★ **3636**
			3353-21
		OP-02E	★ **3636**
			3343-13
		REF-02	★ **3639**
			3402-120
			3404-149
			¶ 429-11
			¶ 429-15
		REF-02A	★ **3639**
			3402-121
			3404-150
		REF-02C	★ **3639**
			3402-122
			3404-151
		REF-02D	★ **3639**
			3402-123
			3404-152
		REF-02E	★ **3639**
			3402-124
			3404-153
		REF-02H	★ **3639**
			3402-125
			3404-154
		SW-02B	2824-103
		SW-02F	2824-104
	Raytheon	**REF-02**	★ **3653**
			3402-128
		REF-02A	★ **3653**
			3402-129
		REF-02C	★ **3653**
			3402-130
		REF-02D	★ **3653**
			3402-131
		REF-02E	★ **3653**
			3402-132
		REF-02H	★ **3653**
			3402-133
	Supertex	HV02	2874-50
		VC02	2898-80
		VF02	2896-37
	Universal	IS02A	4457-10
		IS02B	4457-11
		IS02C	4457-12
		IS02D	4457-13
		IS02E	4457-14
		IS02F	4457-15
		IS02G	4457-16
		IS02H	4457-17
		IS02I	4457-18
		IS02J	4457-19
			(Continued)

¶ Indicates page number in Application Note Directory.
★ Indicates additional data is provided on the page noted.

Base Number	Source	Device	Page-Line
02	WinSystems	LPM-PI02A	2041-39
		MCM-PI02	2040-59
		MCM-SI02	2041-10
020	Intel	iSBC020CX	2032-14
		iSBC020EX	2032-15
	Solitron	CJSE020	3390-98
	Synergy	M020	2029-26
		V020	2029-34
0200	Hughes	HCTR0200	815-25
0203	TI	TIB0203S	3857-62
021	Solitron	CJSE021	3385-122
	TI	TL021	¶ 418-5
02310	DDC	DAC-02310-102	2871-9
		DAC-02310-103	2870-50
		DAC-02310-302	2871-10
		DAC-02310-303	2870-51
0246	Telefunken	TDD0246	3307-52
025	Ferranti	ZNREF025	3402-79
	Motorola	**MVME025**	★**2108**
			2044-2
	SGS	LS025	3398-80
0250	Citel	MA0250	4441-42
	GI	SP0250	3323-121
	Matra	MA0250	4450-29
02500	Harris	HGA-C02500RH	4446-41
			4446-42
0256	GI	SP0256	¶ 364-14
			¶ 365-5
		SP0256-AL2	¶ 367-7
		SP0256A	3319-92
			3323-122
		SP0256A-AL2	3319-93
027	LinearTech	OP-027E	3341-31
02701	DDC	DAC-02701	2865-47
028	Intel	iSBC028A	2032-30
		iSBC028C	2032-29
		iSBC028CX	2032-3
02C16	Calmos	CA02C16	3832-42
03	**Apex**	**PA03**	★**3525**
			3330-39
			3331-66
		PA03A	★**3525**
			3340-104
	Brachman	MMC/03	2005-19
	Interdesign	ULA03G	4462-45
	MicroPwr	**MPOP-03**	★ **688**
			★**3607**
			3363-12
		MPOP-03A	★ **688**
			★**3607**
			3362-14
		MPOP-03B	★ **688**
			★**3607**
			3365-27
		MPOP-03C	★ **688**
			★**3607**
			3363-13
		MPOP-03D	★ **688**
			★**3607**
			3365-28
		MPOP-03E	★ **688**
			★**3607**
			3362-9
	PMI	BUF-03A	3329-21
		BUF-03B	3329-24
		BUF-03E	3329-20
		BUF-03F	3329-23
		DAC-03AD	★**3637**
			2859-8
		DAC-03BD	★**3637**
			2859-9
		DAC-03CD	★**3637**
			2859-43
		DAC-03DD	★**3637**
			2859-53
		SW-03B	2824-95
		SW-03F	2824-96
	Raytheon	**REF-03**	★**3654**
			3402-71
		REF-03C	★**3654**
			3402-72
		REF-03D	★**3654**
			3402-73
	Siliconix	IS03A	4455-36
		IS03B	4455-38
		IS03C	4455-40
			(Continued)
03	Siliconix	IS03D	4455-42
		IS03E	4455-44
		IS03F	4455-46
		IS03G	4455-48
		IS03H	4455-50
	Supertex	HV03	2874-53
			¶ 397-13
		VF03	2896-38
	Universal	IS03A	4457-22
		IS03B	4457-24
		IS03C	4457-26
		IS03D	4457-28
		IS03E	4457-30
		IS03F	4457-32
		IS03G	4457-34
		IS03H	4457-36
		IS03J	4457-20
	WinSystems	LPM-PI03	2040-43
030	DDC	ADH-030II-10	2868-17
		ADH-030II-12	2861-36
0300	AD	HTC-0300	3403-162
	MicroNet	**MN0300A**	★**3205**
			3405-1
031	Universal	IS031	4457-21
032	Intel	iSBC032A	2032-23
	MicroInds	MIB032A/064A	2036-36
0320	Hughes	HCTR0320	3375-139
0321	Hughes	HSSR0321	835-9
0324	Siemens	TBB0324	3335-3
033	**VTC**	**VA033**	★**3742**
			3329-48
0330	Signetics	SCC0330M	4455-3
0347	Hughes	HCTR0347	3375-108
	ThomsonCSF	TDB0347	3373-39
		TDB0347A	3370-6
		TDB0347B	3371-29
0351	Hughes	HSSR0351	835-10
04	ArrayTech	AT-LD-04	4462-5
	CompAuto	NM4/04	2025-32
	GenMicro	GMSV04	2044-7
			2044-47
	MicroInds	80/04	2005-24
	MicroPwr	**MPOP-04**	★ **688**
			★**3607**
			3363-9
		MPOP-04A	★ **688**
			★**3607**
			3362-10
		MPOP-04B	★ **688**
			★**3607**
			3365-23
		MPOP-04C	★ **688**
			★**3607**
			3363-10
		MPOP-04D	★ **688**
			★**3607**
			3365-24
		MPOP-04E	★ **688**
			★**3607**
			3362-11
	PMI	CMP-04B	3315-22
		CMP-04F	3315-23
		OP-04	★**3636**
			3363-14
		OP-04A	★**3636**
			3362-5
		OP-04B	★**3636**
			3365-20
		OP-04C	★**3636**
			3363-15
		OP-04D	★**3636**
			3365-21
		OP-04E	★**3636**
			3362-6
		SW-04B	2824-97
		SW-04F	2824-98
	Supertex	HV04	2874-51
			¶ 397-13
	WinSystems	LPM-SI04	2040-26
	Wintek	**ABP04**	★**2118**
			2037-36
		MAI04	★**2118**
			2037-11
		MFC04	★**2118**
			2037-7
040	Ferranti	ZNREF040	3402-86
	Intel	iSBC040EX	2032-18
0400	Citel	MA0400	4441-43
	Matra	MA0400	4450-30
	Sprague	UDS-0400	2896-65
		UDS-0400-1	2896-66
	TI	SBP0400	¶ 381-17
0402	Sprague	UDS-0402	2896-77
		UDS-0402-1	2896-78
0403	Sprague	UDS-0403	2896-62
		UDS-0403-1	2896-63
0405	**AD**	**HDG-0405**	★**3115**
			843-141
			2849-14
	Datel	DAC-0405	843-142
			2849-12
	Intech	0405	843-144
		0405H	2849-15
	MicroNet	**MN0405**	★**3204**
			843-146
			2849-13
0406	Sprague	UDS-0406	2896-51
		UDS-0406-1	2896-52
0407	Sprague	UDS-0407	2896-59
		UDS-0407-1	2896-60
0408	Sprague	UDS-0408	2896-70
		UDS-0408-1	2896-73
041	Siemens	S041	3322-29
042	Siemens	S042	3307-60
			3398-81
0432	Sprague	UDS-0432	2896-71
		UDS-0432-1	2896-74
0433	Sprague	UDS-0433	2896-72
		UDS-0433-1	2896-75
0437	Hughes	HLCD0437	819-110
0438	GI	AY0438I	2877-111
	Hughes	HLCD0438A	819-115
0440	GI	AY0440A	2877-114
		AY0440B	2877-115
045	SGS	LS045	3357-81
0450	Signetics	SCC0450M	4455-4
048	PlesseyMicro	PME 048D	2045-37
	Plessey	PME-048D	2045-56
0488	Hughes	HLCD0488	819-64
			2874-70
0492	GI	AY0492A	3323-95
		AY0492B	3323-96
0495	GI	AY0495	3323-94
05	GI	LA05	4445-28
	LinearTech	OP-05	3341-63
		OP-05A	3341-11
		OP-05C	3345-10
		OP-05E	3341-32
	MicroPwr	**MPOP-05**	★ **688**
			★**3607**
			3342-45
		MPOP-05A	★ **688**
			★**3607**
			3340-12
		MPOP-05C	★ **688**
			★**3607**
			3345-12
		MPOP-05E	★ **688**
			★**3607**
			3342-49
		MPREF-05	★ **688**
			3402-106
	PMI	CMP-05A	3312-5
		CMP-05B	3312-13
		CMP-05E	3312-6
		CMP-05F	3312-14
		DAC-05A	★**3637**
			2859-66
		DAC-05C	★**3637**
			2859-67
		DAC-05E	★**3637**
			2859-56
		DAC-05G	★**3637**
			2859-68
		OP-05	★**3636**
			3341-60
			3342-46
			¶ 406-7
			¶ 407-20
		OP-05A	★**3636**
			3341-13
			(Continued)
05	PMI	OP-05A	3340-14
		OP-05C	★**3636**
			3345-13
		OP-05E	★**3636**
			3341-41
			3342-50
		REF-05A	3402-126
			3404-155
		REF-05B	3402-127
			3404-156
		SW-05B	2823-21
		SW-05F	2823-24
		SW-05G	2823-25
	Raytheon	**OP-05**	★**3666**
			3342-43
		OP-05A	★**3666**
			3340-11
		OP-05C	★**3666**
			3345-9
		OP-05E	★**3666**
			3342-47
	Siliconix	IS05A	4455-37
		IS05B	4455-39
		IS05C	4455-41
		IS05D	4455-43
		IS05E	4455-45
		IS05F	4455-47
		IS05G	4455-49
		IS05H	4455-51
	Supertex	HV05	2874-54
			¶ 397-13
	Universal	IS05A	4457-23
		IS05B	4457-25
		IS05C	4457-27
		IS05D	4457-29
		IS05E	4457-31
		IS05F	4457-33
		IS05G	4457-35
		IS05H	4457-37
050	**AD**	**HOS-050**	★**3508**
			3331-35
			3334-259
		HOS-050A	★**3508**
			3331-36
		HOS-050C	★**3508**
			3331-37
			3334-260
	DDC	ADH-050	3404-167
	Ferranti	ZNREF050	3402-135
	MicroNet	**MN050**	★**3205**
			3405-2
	Motorola	**MVME050**	★**2108**
	Sanyo	STK050	3318-114
0500	AD	HTC-0500	3403-163
	Fairchild	**FGC0500**	★**4621**
			4442-15
		FGE0500	★**4621**
			4442-16
	Sprague	UDS-0500	2896-64
	VTI	**VGC0500**	★**4805**
			4458-9
0502	Sprague	UDS-0502	2896-76
0503	Sprague	UDS-0503	2896-61
0506	Sprague	UDS-0506	2896-50
0507	Sprague	UDS-0507	2896-58
0508	Sprague	UDS-0508	2896-67
051	DDC	ADH-051	3404-168
0515	Hughes	HLCD0515	2874-71
05203	DDC	THA05203	3404-172
05210	DDC	THA-05210	3404-170
05211	DDC	THA-05211	3404-171
05310	STDMicro	05310	2015-29
0532	Sprague	UDS-0532	2896-68
05320	STDMicro	05320	2015-30
05321	STDMicro	05321	2015-32
05322	STDMicro	05322	2015-33
05323	STDMicro	05323	2015-31
05324	STDMicro	05324-01	2015-24
		05324-02/3	2015-38
		05324-11A	2015-25
		05324-12/13A	2015-39
05326	STDMicro	05326	2015-34
0533	Hughes	HLSS0533	837-75
	Sprague	UDS-0533	2896-69
05340	STDMicro	05340	2039-52
05350	STDMicro	05350	2042-33

Arranged alphanumerically from left to right.

PART NUMBER INDEX

Base Number	Source	Device	Page-Line
05352	STDMicro	05352	2042-43
05360	STDMicro	05360	2039-12
05364	STDMicro	05364	2039-16
05370	STDMicro	05370	2040-17
05373	STDMicro	05373	2041-18
05374	STDMicro	05374	2041-3
0538	Hughes	HLCD0538A	819-65 2874-72
05380	STDMicro	05380	2040-16
05382	STDMicro	05382	2040-37
05386	STDMicro	05386	2041-4
05388	STDMicro	05388	2040-30
0539	Hughes	HLCD0539A	819-66 2874-73
054	SGS	M054	3325-66
0540	Hughes	HLCD0540	819-67 2874-74
0541	Hughes	HLCD0541	819-68
0542	Hughes	HLCD0542	819-69
0548	Hughes	HLCD0548	819-70 2874-75
055	SGS	M055	3325-67
0550	Hughes	HLCD0550	819-71 2874-76
0551	Hughes	HLCD0551	819-72 2874-77
056	Intel	iSBC056A	2032-32
		iSBC056C	2032-31
		iSBC056CX	2032-4
058	Sanyo	STK058	3318-115
05809	STDMicro	05809	2042-30
05822	STDMicro	05822	2040-9
05823	STDMicro	05823	2040-66
05824	STDMicro	05824	2040-18
05825	STDMicro	05825	2040-21
05826	STDMicro	05826	2040-14
05827	STDMicro	05827	2042-32
05828	STDMicro	05828	2040-31
05XXA0	National	LX05XXA0	3401-136
06	GenMicro	GMSV06	2027-22
	PMI	**DAC-06B**	★**3637** 2859-50
		DAC-06C	★**3637** 2859-54
		DAC-06E	★**3637** 2859-7
		DAC-06F	★**3637** 2859-42
		DAC-06G	★**3637** 2859-52
		OP-06A	★**3636** 3339-15
		OP-06B	★**3636** 3343-21
		OP-06F	★**3636** 3343-22
		OP-06G	★**3636** 3345-14
		SW-06B	★**3639** 2827-99
		SW-06F	★**3639** 2827-100
		SW-06G	★**3639** 2827-101
	Supertex	HV06	2874-52 ¶ 397-13
060	AD	HDS-060	3357-170
		HOS-060	★**3508** 3344-46
		HOS-060/883	★**3508** 3344-47
		HOS-060S	★**3508** 3330-111 3331-38 3334-261
0600	**Harris**	**HSG0600RH**	★ **655** 4446-34
	Siemens	SAB0600	3327-156
0601	Siemens	SAB0601	3327-157
0602	Siemens	SAB0602	3327-158
0605	**AD**	**HDG-0605**	★**3115** 843-160 2850-11
	Datel	DAC-0605	843-161 2850-9 (Continued)
0605	Intech	0605	843-162
		0605H	2850-12
	MicroNet	**MN0605**	★**3204** 843-163 2850-10
	OEI	AH0605	3352-19
0607	Hughes	HLCD0607	819-73 2874-78
061	**TI**	**TL061M**	★ **718** 3354-50
062	Ferranti	ZNREF062	3402-139
	TI	**TL062M**	★ **718** 3366-36
	ThomsonCSF	TL062C	3368-41
064	Intel	iSBC064A	2032-25
	TI	**TL064M**	★ **719** 3373-11
	ThomsonCSF	TL064C	3373-50
07	**AD**	**ADOP-07**	★**3504** ★**3507** 3332-13 3338-34
		ADOP-07A	★**3504** ★**3507** 3335-35
		ADOP-07C	★**3504** ★**3507** 3340-18
		ADOP-07D	★**3504** ★**3507** 3340-22
		ADOP-07E	★**3504** ★**3507** 3338-45
	Apex	PA-07	¶ 407-12
		PA07	★**3525** 3348-34 3360-27 3330-50 3331-68 3346-19
		PA07A	★**3525** 3340-103
		PA07M	★**3525** 3346-20
	Harris	HA-OP07	3341-24 3338-35
		HA-OP07A	3335-36
		HA-OP07C	3338-52
		HA-OP07E	3335-37
	LinearTech	OP-07	3338-33
		OP-07A	3341-33
		OP-07C	3340-16
		OP-07E	3338-44
	LogicDev	LRF07	844-100
	Maxim	OP-07	3338-36
		OP-07A	3335-38
		OP-07C	3340-19
		OP-07D	3340-24
		OP-07E	3338-48
	MicroPwr	**MPOP-07**	★ **688** ★**3607** 3338-38
		MPOP-07A	★ **688** ★**3607** 3335-40
		MPOP-07C	★ **688** ★**3607** 3340-20
		MPOP-07D	★ **688** ★**3607** 3340-23
		MPOP-07E	★ **688** ★**3607** 3338-46
		OP-07E	3338-50
	PMI	**OP-07**	★**3636** ★**3639** 3338-39 ¶ 407-5 ¶ 408-9
		OP-07A	★**3636** ★**3639** 3341-42 3335-41
		OP-07C	★**3636** (Continued)
07	**PMI**	**OP-07C**	★**3639** 3357-213
		OP-07D	★**3636** ★**3639** 3340-26
		OP-07E	★**3636** ★**3639** 3338-51
	Raytheon	**OP-07**	★**3666** 3343-37
		OP-07A	★**3666** 3335-34
		OP-07C	★**3666** 3340-17
		OP-07D	★**3666** 3340-21
		OP-07E	★**3666** 3343-38
	Wintek	**ABP07**	★**2118**
		APP07	2037-37
070	Sanyo	STK070	3318-116
0700	Signetics	SCC0700M	4455-10
071	**Motorola**	**TL071**	★**3616** 3357-21
		TL071AC	★**3616** 3354-48
		TL071BC	★**3616** 3346-181
		TL071M	★**3616** 3354-47
	TI	**TL071M**	★ **718** 3354-46
072	**Motorola**	**TL072AC**	★**3617** 3366-35
		TL072BC	★**3617** 3363-45
		TL072C	★**3617** 3368-17
		TL072M	★**3617** 3366-34
	TI	**TL072M**	★ **718** 3366-33
	ThomsonCSF	TL072C	3368-18
074	**Motorola**	**TL074AC**	★**3618** 3372-15
		TL074BC	★**3618** 3372-13
		TL074C	★**3618** 3373-27
		TL074M	★**3618** 3373-10
	TI	TL074M	3372-12
	ThomsonCSF	TL074AC	3372-16
		TL074BC	3372-14
0747	Siemens	TBB0747	3366-57
		TBC0747	3363-81
0748	Siemens	TBB0748	3355-21
		TBC0748	3350-34
075	Sanyo	STK075	3318-117
077	Sanyo	STK077	3318-118
078	Sanyo	STK078	3318-119
08	AMD	DAC-08	2852-9
		DAC-08A	2850-46
		DAC-08C	2854-30
		DAC-08E	2852-22
	AD	ADDAC08	2852-10
		ADDAC08A	2850-47
		ADDAC08C	2854-31
		ADDAC08E	2852-23
		ADDAC08H	2850-48
	Apex	**PA08**	★**3525** 3348-85 3360-18 3330-101 3331-59 3346-18
		PA08A	★**3525** 3340-102
		PA08M	★**3525** 3346-21
	ArrayTech	AT-LD-08	4462-6
	Datel	**DAC-08BC**	★**3162** 2852-20
		DAC-08BM	★**3162** 2852-21
	DistComp	DCS-SI08	2011-21 (Continued)
08	DistComp	DCS/SI08	2011-26
	Fairchild	DAC08C	2854-32
		DAC08EC	2852-24
		DAC08M	2852-11
	Intech	AmDAC-08	¶ 389-1
	LogicDev	LMU08	843-28
		LMU08C	807-102
		LMU08M	807-115
		LRF08	844-101
		LRF08C	831-88 831-90
		LRF08M	831-89
	MicroPwr	**MPOP-08A**	★ **688** ★**3607** 3340-9
		MPOP-08B	★ **688** ★**3607** 3340-70
		MPOP-08C	★ **688** ★**3607** 3344-50
		MPOP-08E	★ **688** ★**3607** 3340-10
		MPOP-08F	★ **688** ★**3607** 3340-71
		MPOP-08G	★ **688** ★**3607** 3344-51
	Motorola	**DAC-08**	★**3630** 2852-12
		DAC-08A	★**3630** 2851-1
		DAC-08C	★**3630** 2854-33
		DAC-08E	★**3630** 2852-25
		DAC-08H	★**3630** 2851-2
	PMI	**DAC-08**	★**3637** ★**3639** 2852-13 ¶ 386-4 ¶ 388-13 ¶ 388-14 ¶ 389-4 ¶ 390-19 ¶ 391-1 ¶ 392-13 ¶ 392-21 ¶ 393-12 ¶ 406-7
		DAC-08A	★**3637** ★**3639** 2851-5
		DAC-08C	★**3637** ★**3639** 2854-35
		DAC-08E	★**3637** ★**3639** 2852-27
		DAC-08H	★**3637** ★**3639** 2851-6
		MUX-08	¶ 401-3
		MUX-08A	★**3639** 2830-181
		MUX-08B	★**3639** 2830-187
		MUX-08E	★**3639** 2830-179
		MUX-08F	★**3639** 2830-184
		OP-08	★**3636** 3347-7
		OP-08A	★**3636** 3340-7
		OP-08C	★**3636** 3344-52
		OP-08E	★**3636** 3340-8
		OP-08G	★**3636** 3344-53
	Raytheon	**DAC-08**	★**3664** 2852-14 (Continued)

¶ Indicates page number in Application Note Directory.
★ Indicates additional data is provided on the page noted.

Base Number	Source	Device	Page-Line
08	**Raytheon**	**DAC-08A**	**★3664**
			2851-7
		DAC-08C	**★3664**
			2854-36
		DAC-08E	**★3664**
			2852-28
		DAC-08H	**★3664**
			2851-8
	Signetics	DAC-08	2852-15
		DAC-08A	2851-9
		DAC-08C	2854-37
		DAC-08E	2852-29
		DAC-08H	2851-10
		DAC08	**★3720**
	TRW-LSI	MPY08	843-41
		MPY08HU	855-152
	Wintek	**MDS08**	**★2118**
			2037-15
		MPI08	**★2118**
			2037-29
		MSI08	**★2118**
			2037-26
080	AMD	DAC-080QF	2850-44
	Sanyo	STK080	3318-120
0800	Citel	MA0800	4441-44
	Matra	MA0800	4450-31
	National	ADC0800P	2837-31
		ADC0800PC	2837-32
	Sharp	LH0800B	1460-73
			1429-23
0801	AD	MAH-0801	2832-11
	National	ADC0801	2833-18
		ADC0801C	2833-19
		DAC0801C	2854-34
	Sharp	LH0801	1429-24
	Signetics	**ADC0801**	**★3686**
			★3725
			2833-20
		ADC0801C	**★3686**
			★3725
			2833-21
0802	**AD**	**HAS-0802**	**★3126**
			2833-44
		HDH-0802	2851-25
		HDH-0802M	2851-26
	Fairchild	μA0802AC	2852-7
		μA0802BC	2854-28
		μA0802CC	2854-29
		μA0802M	2852-8
	Intersil	**ADC0802**	**★3199**
			2835-27
		ADC0802C	**★3199**
			2835-28
	National	ADC0802	2835-31
		ADC0802C	2835-32
		DAC0802	2851-3
		DAC0802C	2851-4
	Sharp	LH0802	1429-25
	Signetics	**ADC0802**	**★3686**
			★3725
			2835-34
		ADC0802C	**★3686**
			★3725
			2835-35
0803	**Intersil**	**ADC0803**	**★3199**
			2835-29
		ADC0803C	**★3199**
			2835-30
	National	ADC0803C	2835-33
	Sharp	LH0803	1429-26
	Signetics	**ADC0803C**	**★3686**
			★3721
			2835-36
08032	National	NS08032	1464-82
0804	**Intersil**	**ADC0804**	**★3199**
			2837-12
		ADC0804C	**★3199**
			2837-13
	National	ADC0804C	2837-14
	Signetics	**ADC0804C**	**★3686**
			★3721
			2837-15
0805	**AD**	**HDG-0805**	**★3115**
			844-24
			2855-39
	Datel	DAC-0805	844-25
			(Continued)
0805	Datel	DAC-0805	2855-37
	Intech	0805	844-26
		0805H	2855-41
	MicroNet	**MN0805**	**★3204**
			844-27
			2855-40
	National	ADC0805	844-28
		ADC0805C	2837-16
	Signetics	**ADC0805C**	**★3686**
			★3721
			2837-17
0806	National	DAC0806C	2855-3
0807	National	DAC0807C	2854-44
0808	National	ADC0808	2835-18
			3399-15
		DAC0808	2852-33
		DAC0808C	2852-34
	TI	**ADC0808**	**★ 720**
0809	National	ADC0809	3399-16
		ADC0809C	2837-9
081	**Motorola**	**TL081**	**★3616**
			3357-127
		TL081A	**★3616**
			3354-49
		TL081B	**★3616**
			3346-192
		TL081C	**★3616**
			3357-131
		TL081M	**★3616**
			3354-54
	RCA	**CA081**	**★3672**
			★3676
			3357-101
		CA081A	**★3672**
			★3676
			3354-45
		CA081B	**★3672**
			★3676
			3346-165
	TI	**TL081**	**★ 718**
	ThomsonCSF	TL081C	3357-128
0810	AD	HDD-0810	2855-32
		HDD-0810C	2855-34
		HDD-0810CM	2855-35
		HDD-0810M	2855-33
		HDS-0810E	**★3115**
			2850-36
		HDS-0810EM	2850-37
0811	National	ADC0811	2834-51
		ADC0811BC	2835-1
		ADC0811BJ	2835-2
		ADC0811CC	2837-6
		ADC0811CJ	2837-7
	Sharp	LH0811	1429-27
0812	Sharp	LH0812	1429-28
0813	Sharp	LH0813	1429-29
0816	National	ADC0816	2835-20
		ADC0816C	2835-19
			3399-53
			1457-76
0817	National	ADC0817	2837-10
		ADC0817C	3399-54
082	**Exar**	**XR082**	**★3555**
			3366-38
		XR082C	**★3555**
			3368-45
		XR082M	**★3555**
			3366-39
	Motorola	**TL082A**	**★3617**
			3366-42
		TL082B	**★3617**
			3363-47
		TL082C	**★3617**
			3368-51
		TL082M	**★3617**
			3366-46
	National	TL082C	3368-53
	RCA	**CA082**	**★3672**
			★3676
			3368-34
		CA082A	**★3672**
			★3676
			3366-32
		CA082B	**★3672**
			★3676
			3363-42
			(Continued)
082	Sanyo	STK082	3318-121
	SGS	M082	3321-2
		M082AA	3321-3
		TL082	3368-44
		TL082A	3366-37
		TL082B	3363-46
	TI	**TL082M**	**★ 718**
			3366-43
	ThomsonCSF	TL082AC	3366-45
		TL082BC	3363-48
		TL082C	3368-52
0820	AD	HDS-0820	2851-37
		HDS-0820M	2851-38
	National	ADC0820B	2834-3
		ADC0820C	2836-29
	Signetics	**TDA0820T**	**★3727**
			★3731
			3326-107
			3398-85
0829	National	ADC0829	2835-37
083	**Exar**	**XR083**	**★3555**
			3366-40
		XR083C	**★3555**
			3368-46
		XR083M	**★3555**
			3366-41
	RCA	**CA083**	**★3672**
			3368-58
		CA083A	**★3672**
			3367-46
		CA083B	**★3672**
			3363-71
	Sanyo	STK083	3318-122
	SGS	M083	3321-4
		M083AA	3321-5
	TI	TL083M	3366-44
0830	National	DAC0830	2850-34
0831	National	ADC0831B	2835-10
		ADC0831C	2837-1
		DAC0831	2851-33
	TI	ADC0831B	2835-15
0832	National	ADC0832B	2835-11
		ADC0832C	2837-2
		DAC0832	2853-14
	TI	ADC0832B	2835-16
0833	National	ADC0833B	2835-12
		ADC0833C	2837-3
0834	National	ADC0834B	2835-13
		ADC0834C	2837-4
	TI	ADC0834B	2835-17
0838	National	ADC0838B	2835-14
		ADC0838C	2837-5
084	Exar	XR084	3372-17
			¶ 423-4
		XR084C	3373-52
		XR084M	3372-18
	Motorola	**TL084**	**★3618**
			3373-54
		TL084A	**★3618**
			3372-20
		TL084C	**★3618**
			3374-4
		TL084M	**★3618**
			3373-12
	RCA	**CA084**	**★3672**
			★3676
			3373-48
		CA084A	**★3672**
			★3676
			3372-9
		CA084B	**★3672**
			★3676
			3370-35
	Sanyo	STK084	3318-123
	SGS	TL084	3373-55
		TL084A	3372-21
		TL084B	3370-36
	TI	**TL084M**	**★ 719**
			3372-22
	ThomsonCSF	TL084AC	3372-30
		TL084BC	3370-37
		TL084C	3374-7
0844	National	ADC0844B	2835-4
			2837-8
086	NEC	MD-086FD-10	1819-10
	Sanyo	STK086	3318-124
			(Continued)
086	SGS	M086	3321-6
		M086AA	3321-7
0881	Sharp	LH0881	1429-30
089	SGS	M089	3378-6
09	**Apex**	**PA09**	**★3525**
			3348-49
			3330-65
			3346-178
		PA09A	**★3525**
			3342-2
		PA09M	**★3525**
			3346-179
	Datricon	ACS-09	2019-4
	MicroPwr	**MPOP-09A**	**★ 688**
			★3607
			3369-40
		MPOP-09B	**★ 688**
			★3607
			3370-27
		MPOP-09E	**★ 688**
			★3607
			3369-41
		MPOP-09F	**★ 688**
			★3607
			3370-28
	PMI	**OP-09A**	**★3636**
			3369-45
		OP-09B	**★3636**
			3370-31
		OP-09E	**★3636**
			3370-1
		OP-09F	**★3636**
			3370-32
090	SGS	M090	3377-53
0900	**Fairchild**	**FGC0900**	**★4621**
			4442-17
	VTI	**VGC0900**	**★4805**
			4458-7
094	Exar	XR094	3372-25
		XR094C	3374-2
		XR094M	3372-26
	MicroInds	MIB094	2036-19
095	Exar	XR095	3372-27
		XR095C	3374-3
		XR095M	3372-28
096	Exar	XR096	3372-23
		XR096C	3374-1
		XR096M	3372-24
099	SGS	M099	3378-7
0D4	Motorola	MF0D4-02F	¶ 394-13
1	Altera	PLDSMOD1	5040-61
	Ampro	1AX	2038-48
	Basicon	MC-1N	2021-21
		MC-1Z	2005-4
	CharlesRiver	CC-1	2043-9
		NC-1	2043-14
		VCC-1	2043-54
		VNC-1	2044-5
	Comark	Diskstor M-1	1811-12
	CIC	MSA-1	4462-23
		MSB-1	4462-24
	Datel	**SHM-IC-1**	**★3163**
			3404-6
		SHM-IC-1M	3404-7
		VFQ-1	**★3163**
			3405-69
	DYSYS	BRICK-1	2011-30
	Emulogic	EMUNET-1	1813-8
	Fairchild	DCM-1	2011-33
		FS-1	1813-11
		Microflame 1	1813-13
	Ferranti	ZNPCM1	3377-137
			¶ 399-14
	Force	ADDA-1	2045-6
		ASCU-1	2043-32
		CPU-1	2029-7
		DRAM-1	2045-13
		GDC-1	2027-12
		OPIO-1	2045-7
		PIO-1	2044-50
		RR-1	2045-54
		SASI-1	2027-13
		SIO-1	2044-51
		SRAM-1	2045-18
		WFC-1	2043-37
	GouldAMI	UA-1	4446-7
			(Continued)

Arranged alphanumerically from left to right.

PART NUMBER INDEX

Base Number	Source	Device	Page-Line
1	GTEMicro	GEM-1	1813-15
	Hyundai	HMDS-1	1815-7
	Intel	CHMOS-1 Library	4479-26
	Intelicom	STD-CAM1	2040-8
		STD-SVC1	2039-25
	IntelComp	DLP1	2033-54
		DMM1	2033-56
		DMT1	2033-55
	Interdesign	ULA1G	4462-46
		ULA1L	4462-44
		ULA1RA	4442-26
		ULA1RB	4442-27
		ULA1RC	4442-28
		ULA1RD	4442-29
		ULA1U	4463-1
	Lomas	LDPCOLOR 1	2038-13
	Matrix	CP1	2019-1
	Matrox	MTX-A1	1466-70
		MTX-B1	1466-71
	Mostek	MD-SBC1	2005-5
		MDX-CPU1	2019-35
	Motorola	**MVMCH1**	★**2117**
	Octagon	SYS-1	2023-8
	OKI	**SAS-1**	★**4733**
	PCAD	CAE-1	4927-1
		EDA-1	4927-3
		PCB-1	4928-1
			4986-2
	PlesseyMicro	PME 1EA	2045-31
		PME CRR-1	2045-40
		PME GDC-1	2044-6
		PME SASI-1	2044-37
		PME SID-1	2045-2
		PME WFC-1	2043-35
	Plessey	PME-1EA	2045-52
		PME-CRR-1	2045-12
		PME-GDC-1	2043-33
		PME-SASI-1	2044-40
		PME-SIO-1	2045-8
		PME-WFC-1	2044-39
		PSM-1VA	2043-26
		PSM-1VP	2043-25
	RCA	PaCMOS-1	4481-12
		SOS-1 Library	★**4742**
			4481-16
	Rockwell	OS3	¶ 375-5
	Signetics	CCL-1	4455-5
		EPL-1	4481-21
	STC	MSIV-1	4465-3
	Tektronix	**QuickChip 1**	★**4756**
			844-104
	TeledyneC	CDA1-3	2824-128
	TLSI	TA-1	4456-21
	Torric	UA1	4456-36
	Vatic	**HC1P-8**	★**4804**
		HC1P-A	★**4804**
			4482-15
		HC1P-H	4482-14
		MA1	★**4804**
			4457-44
		MB1	★**4804**
	VersaLogic	AIN-1A	2039-65
		AIN-1B	2039-64
		AOUT-1	2039-68
		IPI-1	2040-46
		Z80-1	2017-18
	Vesta	ipc-BUB-1	2041-57
		ipc-DISK-1	2039-10
10	**Apex**	**PA10**	★**3525**
			3348-36
			3360-30
			3330-52
			3331-71
			3355-9
		PA10A	★**3525**
			3348-35
			3360-28
			3330-51
			3331-69
			3346-212
		PA10M	★**3525**
			3348-37
			3330-53
			3355-10
			(Continued)
10	Astraea	AC-V10	2021-20
	Burr-Brown	**ADC10HT**	★**3146**
			2842-25
			¶ 386-11
		DAC10HT	★**3146**
			2861-50
		MP10	★**3148**
			2856-2
			¶ 377-11
			¶ 381-16
			1469-57
		REF10	★**3151**
			3402-186
	CompAuto	NM4/10	2023-27
	DDC	DDAC-10	2870-26
		HRDC-10	3403-101
		HSDC-10	3403-105
		HXDC-10	3403-118
		SDAC-10	2870-23
	Datel	**ADC-EK10B**	★**3161**
			2838-47
		ADC-ET10BC	★**3160**
			2838-50
		DAC-HA10BC	★**3160**
			★**3162**
			2860-12
		DAC-HA10BC-1	★**3160**
			★**3162**
			2860-10
		DAC-HA10BM	★**3160**
			★**3162**
			2860-13
		DAC-HA10BM-1	★**3160**
			★**3162**
			2860-11
		DAC-HF10	★**3162**
			844-35
		DAC-HF10BMC	★**3162**
			2856-30
		DAC-HF10BMM	★**3162**
			2856-31
		DAC-IC10B	★**3162**
			2860-5
		DAC-IC10BC	★**3162**
			2858-25
		DAC-UP10B	★**3162**
			2859-10
		VFV-10K	3405-98
	GI	LA10	4445-29
	Harris	**HF10**	★**3596**
			3377-20
			3398-9
		LM10C	¶ 407-4
	Intel	iBCK10	2046-25
	Interdesign	ULA10ARA	4443-17
		ULA10ARB	4443-18
		ULA10ARC	4443-19
		ULA10ARD	4443-20
		ULA10DS	4443-16
	LinearTech	LM10	3346-68
		LM10B	3346-69
		LM10BL	3346-67
		LM10C	3350-19
		LM10CL	3350-17
		MCELM10	3346-70
	Maxim	MF10	3398-30
	MCE	MCELM10	3346-72
	MicroPwr	**MPOP-10**	★ **688**
			★**3607**
			3361-39
		MPOP-10A	★ **688**
			★**3607**
			3361-40
		MPOP-10C	★ **688**
			★**3607**
			3362-28
		MPOP-10E	★ **688**
			★**3607**
			3361-41
		MPREF-10	★ **688**
			★**3607**
			3403-40
	Motorola	VME/10	1819-4
		VME10	★**1905**
	National	LM10	3346-73
		LM10B	3346-74
			(Continued)
10	National	LM10BL	3346-71
		LM10C	3350-20
		LM10CL	3350-18
		LT10	¶ 424-7
	Octagon	SYS-10A	2023-11
	Onset	ACR-10	2030-11
	PMI	**DAC-10B**	★**3637**
			2856-32
		DAC-10C	★**3637**
			2856-33
		DAC-10F	★**3637**
			2856-34
		DAC-10G	★**3637**
			2860-1
			2859-51
		OP-10	3361-42
			¶ 404-11
			¶ 420-15
		OP-10A	3361-43
		OP-10C	3361-48
		OP-10E	3361-44
		REF-10A	3403-56
		REF-10B	3403-57
		SMP10A	3404-63
		SMP10B	3404-64
		SMP10E	3404-65
		SMP10F	3404-66
	Raytheon	**DAC-10B**	★**3655**
			2858-4
		DAC-10C	★**3655**
			2858-5
		DAC-10F	★**3655**
			2858-6
		DAC-10G	★**3655**
			2858-22
	Siliconix	VN10KM	¶ 424-6
	TeledyneC	CAG10	2822-25
		CAG10A	2822-21
		CAG10B	2822-26
		CAG10C	2822-23
		CAG10D	2822-24
	Telesis	EDA-10 Personal W/S	4935-1
	WinSystems	MCM-DS10	2041-19
		MCM-P10	2041-15
		MCM-SP10	2040-56
	Wintek	**MCL10**	★**2118**
			2005-36
		MCT10	★**2118**
			2037-13
100	AD	ADDAC100J	2858-27
		ADDAC100K	2858-11
		ADDAC100L	2858-12
		ADDAC100S	2858-28
		ADDAC100T	2858-13
		HOS-100A	★**3508**
			3329-46
			3331-13
		HOS-100AH	★**3508**
			3306-44
		HOS-100S	★**3508**
			3329-47
			3331-11
	Burr-Brown	**DIV100**	★**3152**
			3399-73
		ISO100	¶ 404-16
		ISO100AP	★**3151**
			3306-135
		LOG100	★**3152**
			3307-17
		MPY100	★**3151**
			3401-11
		MPY100A	★**3151**
			3401-12
		MPY100S	★**3151**
			3401-13
		PGA100AG	★**3150**
			3306-115
		PGA100BG	★**3150**
			3306-116
		SPV100	2044-8
		VFC100	★**3148**
			3405-66
		XTR100AM	★**3151**
			3308-70
			(Continued)
100	**Burr-Brown**	**XTR100AP**	★**3151**
			3308-71
		XTR100BM	★**3151**
			3308-72
		XTR100BP	★**3151**
			3308-73
	Calay	ZX100	4909-2
	Calmos	CA100	4441-3
	Cherry	CS100	3320-11
	Cirrus	CL-DCC100	1469-30
		CL-MUSART100	2901-17
		CL-TUPE100	1465-96
	Comlinear	CLC100	3307-138
	Datel	VFV-100K	3405-97
	Exar	**XR-A100**	★**4615**
			4462-29
		XR-B100	★**4615**
			4462-30
		XR-C100	★**4615**
			4462-27
		XR-D100	★**4615**
			4462-28
		XR-E100	★**4615**
			4462-31
		XR-F100	★**4615**
			4462-38
		XR-G100	★**4615**
			4462-34
		XR-H100	★**4615**
			4462-35
		XR-J100	★**4615**
			4462-33
		XR-L100	★**4615**
			4462-37
		XR-M100	★**4615**
			4462-41
		XR-U100	★**4615**
			4462-36
		XR-V100	★**4615**
			4462-40
		XR-W100	★**4615**
			4462-42
		XR-X100	4462-32
	Fairchild	**F100**	★**4013**
		F100K	¶ 359-3
	Ferranti	ZNP100	3400-85
		ZNREF100	3402-165
	IndComp	CCA-100	2038-8
		CCT-100	2038-9
	Inmos	**IMSD100**	★**1903**
			1815-8
	IntMicCir	Interchip 100	4449-8
	Interdesign	ULA100DS	4444-33
	Intersil	LM100	3392-107
	Kontron	KPS-100	1817-8
	LSIComp	**RED100/120**	★**1099**
			834-103
			891-37
	Microlog	FG-100A	2007-35
	Motorola	MPC100	3385-70
	National	AF100	3398-31
		CIM-100	2030-28
	PMI	DAC-100	¶ 386-8
			¶ 386-9
			¶ 390-14
		DAC-100A	2860-8
			2860-9
		DAC-100B	2858-26
		DAC-100C	2859-15
			2859-16
		DAC-100D	2859-48
			2859-49
		DAC100	★**3637**
	Sahni	LA100	4454-25
	SBE	PDS-100	1821-10
	Sharp	SM100	1450-64
			1411-23
	Signetics	**PLS100**	★**4154**
			4473-69
	SiliconSol	**MACH100 Simulation Engine**	★**5113**
		Mach 100	5025-2
			★**5113**
	SingleBoard	SBS-100	2023-20
			(Continued)

¶ Indicates page number in Application Note Directory.
★ Indicates additional data is provided on the page noted.

Base Number	Source	Device	Page-Line
100	Techno	CPU-100	2017-25
	ThirdDomain	RSS-100C	3327-103
		RSS-100M	3327-104
	Zycad	**Expediter**	
		100	★**5122**
1000	ArrayTech	HCD1000	4439-22
	CalDevices	CDI1000	4440-13
	CaseTech	CT-1000	5044-43
		CT1000-2000	★**5106**
	CMA	CMA1000	
		Series	4478-15
	GI	ER1000	890-40
		ROC1000	3853-71
		SP1000	3319-100
	GouldAMI	**GA1000D**	★**4632**
			★**4632**
			4446-15
		GB1000D	★**4632**
			4446-14
	Harris	HV-1000	¶ 422-9
		HV1000	2895-120
		HV1000A	2895-121
	Honeywell	HM1000R	4447-15
	Lambda	LAS1000	3394-6
	Matrox	GXB-1000A	2034-40
	Mostek	GB1000D	4451-16
		MKGA1000D	★**4715**
			4451-18
		MKGB1000D	★**4716**
			4451-17
	National	AM1000	2828-3
			¶ 402-10
		DAC1000	2857-7
		DAC1000C	2857-8
		DT1000	3323-124
	Plessey	BAA1000	4464-38
	Samsung	**SA1000**	★**4746**
	SiliconSol	Mach 1000	5025-3
			5031-1
	Siliconix	SI1000	3307-91
		VQ1000	2898-70
	Supertex	VQ1000	2898-82
	Telesis	EDA-1000	5065-73
	TI	SE1000C	1451-80
		SE1000P	1451-81
			1413-20
		TMS1000	1451-76
			¶ 367-5
			¶ 381-17
			1413-23
	TLSI	TA-1000	4456-27
		TA-1000D	4456-28
	Torric	GA1000D	4456-41
	VTC	**VL1000**	★**4815**
			4482-23
			¶ 445-18
	Western	WD1000	1468-95
10000	**CalDevices**	**CHA10000**	★**4610**
			4440-43
		DLM10000	★**4605**
			4440-44
		HCS10000	4440-28
	Fairchild	F10000C	847-124
			3854-123
	Fujitsu	UM10000	4445-12
	GouldAMI	**GB10000D**	★**4632**
			4446-25
	Mostek	GB10000D	4451-32
		MKGB10000D	★**4716**
			4451-33
	Motorola	MC10000	
		Series	¶ 356-7
		MCA10000	★**4720**
1000A1	Vatic	M1000A1	4457-45
1001	AdvDigital	HDC-1001	2038-25
	AD	MAH-1001	2833-12
	GI	ROC1001	3852-78
	LinearTech	LT1001AC	3341-25
			3335-33
		LT1001AM	3341-26
			3335-31
		LT1001C	3337-54
		LT1001M	3337-55
	National	ADC1001C	2839-17
		AM1001	2828-4
			(Continued)
1001	National	AM1001	¶ 402-10
		DAC1001	2858-41
		DAC1001C	2858-42
	Rockwell	RDC-1001/2	1821-6
	Siemens	TFA1001	3306-18
	Signetics	**TDA1001B**	★**3727**
			3322-68
	Siliconix	VQ1001	2898-71
	ThomsonCSF	TEA1001	3397-4
			¶ 425-10
			¶ 426-6
	TRW-LSI	TDC1001	2833-29
10010	**Fairchild**	**F10010C**	★ **615**
			845-68
		F10010M	★ **615**
			845-69
100101	Fairchild	F100101	848-105
	Hitachi	HD100101	848-106
	Signetics	**100101**	★**1173**
			★**1174**
			848-107
100102	Fairchild	F100102	848-102
	Hitachi	HD100102	848-103
	Signetics	**100102**	★**1173**
			★**1174**
			848-104
100104	Fairchild	F100104	848-101
100107	Fairchild	F100107	848-114
	Hitachi	HD100107	848-115
	Signetics	**100107**	★**1173**
			★**1174**
			848-116
100112	Fairchild	F100112	848-88
	Hitachi	HD100112	848-89
	Signetics	**100112**	★**1173**
			★**1174**
			848-90
100113	Fairchild	F100113	848-86
	Signetics	**100113**	★**1173**
			★**1174**
			848-87
100114	Fairchild	F100114	849-69
	Hitachi	HD100114	849-70
	Signetics	**100114**	★**1173**
			★**1174**
			849-71
100117	Fairchild	F100117	848-108
	Hitachi	HD100117	848-109
	Signetics	**100117**	★**1173**
			★**1174**
			848-110
100118	Fairchild	F100118	848-111
	Hitachi	HD100118	848-112
	Signetics	**100118**	★**1173**
			848-113
100121	Fairchild	F100121	848-71
100122	Fairchild	F100122	848-68
	Hitachi	HD100122	848-69
	Signetics	**100122**	★**1173**
			★**1174**
			848-70
100123	Fairchild	F100123	848-91
	Hitachi	HD100123	848-92
	Signetics	**100123**	★**1173**
			★**1174**
			848-93
100124	Fairchild	F100124	849-41
	Signetics	**100124**	★**1173**
			849-42
100125	Fairchild	F100125	849-43
	Hitachi	HD100125	849-44
	Signetics	**100125**	★**1173**
			849-45
100126	Fairchild	F100126	848-84
	Signetics	**100126**	★**1173**
			★**1174**
			848-85
100130	Fairchild	F100130	848-117
	Hitachi	HD100130	848-118
100131	Fairchild	F100131	848-94
	Hitachi	HD100131	848-95
	Signetics	**100131**	★**1173**
			★**1174**
			848-96
100135	Fairchild	F100135	848-100
100136	Fairchild	F100136	848-76
	Hitachi	HD100136	848-77
	Signetics	**100136**	★**1173**
			★**1174**
			848-78
100139	Fairchild	F100139	848-80
10014	**Fairchild**	**F10014C**	★ **615**
			848-1
		F10014M	★ **615**
			848-2
100140	Fairchild	F100140	848-79
100141	Fairchild	F100141	849-38
	Hitachi	HD100141	849-39
	Signetics	**100141**	★**1173**
			★**1174**
			849-40
100142	Fairchild	F100142	848-122
	Hitachi	HD100142	848-123
100145	Fairchild	F100145	849-5
			3831-7
	Hitachi	HD100145	849-6
	Signetics	**100145**	★**1173**
			★**1174**
			3831-8
100149	**Signetics**	**100149**	★**4166**
			849-3
			3814-73
100150	Fairchild	F100150	848-119
	Hitachi	HD100150	848-120
	Signetics	**100150**	★**1173**
			★**1174**
			848-121
100151	Fairchild	F100151	848-97
	Hitachi	HD100151	848-98
	Signetics	**100151**	★**1173**
			★**1174**
			848-99
100155	Fairchild	F100155	849-29
	Hitachi	HD100155	849-30
	Signetics	**100155**	★**1173**
			★**1174**
			849-31
100156	Fairchild	F100156	849-35
	Hitachi	HD100156	849-36
100158	Fairchild	F100158	843-114
	Hitachi	HD100158	849-37
	Signetics	**100158**	★**1173**
			★**1174**
			843-115
10016	**Fairchild**	**F10016C**	★ **615**
			845-45
		F10016M	★ **615**
			845-46
100160	Fairchild	F100160	849-66
	Hitachi	HD100160	849-67
	Signetics	**100160**	★**1173**
			★**1174**
			849-68
100163	Fairchild	F100163	849-23
	Hitachi	HD100163	849-24
	Signetics	**100163**	★**1173**
			★**1174**
			849-25
100164	Fairchild	F100164	849-32
	Hitachi	HD100164	849-33
	Signetics	**100164**	★**1173**
			★**1174**
			849-34
100165	Fairchild	F100165	849-60
	Hitachi	HD100165	849-61
	Signetics	**100165**	★**1173**
			★**1174**
			849-62
100166	Fairchild	F100166	848-64
	Hitachi	HD100166	848-65
	Signetics	**100166**	★**1173**
			★**1174**
			848-66
100170	Fairchild	F100170	848-81
	Hitachi	HD100170	848-82
	Signetics	**100170**	★**1173**
			★**1174**
			848-83
100171	Fairchild	F100171	849-26
	Hitachi	HD100171	849-27
			(Continued)
100171	**Signetics**	**100171**	★**1173**
			★**1174**
			849-28
100175	Fairchild	F100175	849-49
	Signetics	**100175**	★**1173**
			★**1174**
			849-47
100179	Fairchild	F100179	848-59
	Hitachi	HD100179	848-60
	Signetics	**100179**	★**1173**
			★**1174**
			848-61
100180	Fairchild	F100180	843-3
	Signetics	**100180**	★**1173**
			★**1174**
			843-4
100181	Fairchild	F100181	844-44
	Hitachi	HD100181	848-63
	Signetics	**100181**	★**1173**
			★**1174**
			844-45
100182	Fairchild	F100182	843-5
	Hitachi	HD100182	848-67
100183	Fairchild	F100183	843-14
	Hitachi	HD100183	848-62
100194	Fairchild	F100194	849-72
1002	AMD	MK1002	3857-36
	AD	**HAS-1002**	★**3128**
			2838-13
	Eltec	MS1002	2015-21
	Fujitsu	**C1002AVM**	★**4624**
			4444-50
	GI	ROC1002	3852-75
	LinearTech	LT1002A	3341-9
		LT1002AC	3341-10
			3357-187
		LT1002AM	3357-186
		LT1002C	3357-199
		LT1002M	3357-200
	MicronTech	MT1002	3830-75
			3830-76
			3830-77
	National	AM1002	2828-11
			¶ 402-10
		DAC1002	2859-28
		DAC1002C	2859-29
	Signetics	TEA1002	3326-5
			3327-111
	TRW-LSI	TDC1002	2833-39
	Western	WD1002-MTB	2034-35
		WD1002-SHD	2034-34
			1468-94
100250	Fairchild	F100250	849-57
100255	Fairchild	F100255	849-48
	Siemens	SH100255	849-53
	Signetics	**100255**	★**1173**
			849-46
1003	AD	HDH-1003	2856-26
		HDH-1003M	2858-10
	ITT	TCA1003	3316-68
		UAA1003	3323-112
	LinearTech	LT1003C	3385-57
		LT1003M	3385-58
1004	Eltec	MS1004	2015-36
	ITT	TCA1004	3316-69
	LinearTech	LT1004C	3402-6
		LT1004C-2	3402-48
		LT1004M	3402-7
		LT1004M-2	3402-49
	Siliconix	VQ1004	2898-72
	TI	SE1004C	1451-82
	TRW-LSI	TDC1004	843-10
100402	Fairchild	F100402	849-4
			3831-5
10041	Fairchild	F10041	3856-63
100414	Fairchild	F100414	849-8
		F100414C	3832-44
100415	AMD	AM100415A	3834-41
	Fairchild	**F100415**	★**4014**
			849-12
			(Continued)

Arranged alphanumerically from left to right.

Base Number	Source	Device	Page-Line
100415	**Fairchild**	**F100415A**	★**4014**
			847-70
		F100415C	★**4014**
			3834-39
	Hitachi	HM100415	3834-33
	Signetics	100415	3834-45
		100415A	3834-42
		100415B	3834-34
100416	Fairchild	F100416	849-1
		F100416C	3814-75
10042	**Fairchild**	**F10042**	★**4014**
100422	**Fairchild**	**F100422**	★**4014**
			849-9
			3832-99
		F100422C	★**4014**
			3832-100
	Fujitsu	MBM100422A-7	849-10
			3832-93
	Hitachi	HM100422	3832-101
	Motorola	MCM100422	849-11
		MCM100422-10	3832-106
		MCM100422-15	3833-1
	National	DM100422	3832-116
	NEC		
		μPB100422-10	3832-102
		μPB100422-70	3832-94
	Signetics	100422	3832-117
		100422A	3832-118
		100422B	3832-103
100470	AMD	AM100470	3839-93
		AM100470A	3839-76
		AM100470SA	3839-63
	Fairchild	F100470	849-17
			3839-94
		F100470A	3839-77
	Fujitsu	MBM100470A-10	849-18
			3839-57
		MBM100470A-15	3839-64
	Hitachi	HM100470	3839-78
	Motorola	MCM100470-10	3839-55
		MCM100470-15	3839-62
	NEC		
		μPB100470-10	3839-56
		μPB100470-15	3839-65
		μPB100470-90	3839-53
	Signetics	100470	3839-95
		100470A	3839-79
100474	AMD	AM100474	3835-53
		AM100474A	3835-36
	Fairchild	F100474	849-13
			3835-58
	Fujitsu	MBM100474A-10	3835-29
		MBM100474A-15	3835-37
	Hitachi	HM100474	3835-54
		HM100474-10	3835-30
	Motorola	MCM100474	849-14
		MCM100474-15	3835-42
	NEC		
		μPB100474-10	3835-31
		μPB100474-15	3835-38
		IPB100474-4	3835-24
		μPB100474-60	3835-25
		μPB100474-80	3835-26
	Signetics	100474	849-15
		100474A	849-16
100480	AMD	AM100480	3844-1
		AM100480A	3843-106
	Fairchild	F100480	849-20
			3844-19
	Fujitsu	MBM100480	3844-2
		MBM100480-15	3843-104
		MBM100480-25	3844-3
	Hitachi	HM100480	3844-4
	Motorola	MCM100480	849-21
		MCM100480-25	3844-10
100484	Fujitsu	MBM100484-15	3840-118
	Motorola	MCM100484	849-19
		MCM100484-15	3840-116

Base Number	Source	Device	Page-Line
1005	LinearTech	LT1005C	3392-71
		LT1005M	3392-72
	ThomsonCSF	UAB1005	843-140
			2832-6
		UAC1005	2832-7
	TRW-LSI	TDC1005	3857-14
			3857-15
1006	National	DAC1006	2857-9
		DAC1006C	2857-10
	Siliconix	VQ1006	2898-73
	TRW-LSI	TDC1006	3857-43
			3857-44
1007	LinearTech	LT1007AC	3341-27
		LT1007AM	3341-28
	National	DAC1007	2858-43
		DAC1007C	2858-44
	Telefunken	TEA1007	3398-3
	TRW-LSI	TDC1007	844-17
			2833-22
			2833-23
		TDC1007J	¶ 396-4
1007E1	TRW-LSI	TDC1007E1C	2046-11
1008	**AD**	**ADSP-1008**	★**1008**
			843-83
		ADSP-1008AJ	★**1008**
			807-153
		ADSP-1008AK	★**1008**
			807-154
		ADSP-1008AS	★**1008**
			807-155
		ADSP-1008AT	★**1008**
			807-156
	LinearTech	LT1008C	3339-53
		LT1008M	3339-54
	National	DAC1008	2859-30
		DAC1008C	2859-31
	Sharp	LZ1008AD	3309-39
	TRW-LSI	TDC1008	843-84
1009	AD	ADSP-1009	843-86
		ADSP-1009A	★**1008**
		ADSP-1009AJ	807-71
		ADSP-1009AK	807-72
		ADSP-1009AS	807-73
		ADSP-1009AT	807-74
	ITT	TEA1009	3323-92
		UAA1009	3319-141
	LinearTech	LT1009C-2	3402-50
		LT1009M-2	3402-51
	LogicDev	LMA1009	843-88
		LMA1009C	807-77
		LMA1009M	807-78
	TRW-LSI	TDC1009	843-89
100B122			
	Siemens	SH100B122	849-73
100B250			
	Siemens	SH100B250	849-55
100B252			
	Siemens	SH100B252	849-64
100B384			
	Siemens	SH100B384	849-22
100B392			
	Siemens	SH100B392	849-51
100B393			
	Siemens	SH100B393	849-59
100B395			
	Siemens	SH100B395	849-56
100B396			
	Siemens	SH100B396	849-7
100B402			
	Siemens	SH100B402	849-52
100B404			
	Siemens	SH100B404	849-54
100B417			
	Siemens	SH100B417	849-63
100B419			
	Siemens	SH100B419	849-50
100B420			
	Siemens	SH100B420	849-58
100B480			
	Siemens	SH100B480	849-74
100B481			
	Siemens	SH100B481	849-65

Base Number	Source	Device	Page-Line
100L20EV8			
	AMD	AMPAL100L20EV8	
			4469-52
100R20EV8			
	AMD	AMPAL100R20EV8	
			4469-53
100X100			
	Reticon	RA100X100A	3400-1
100Z416			
	Fairchild	F100Z416	849-2
			3814-70
101	**AD**	**AD101 Series**	★**3507**
		AD101A	3330-14
			3346-107
	Brooktree	BT101	2855-29
			1465-105
	Burr-Brown	**INA101**	★**3150**
			3306-99
		OPA101AM	★**3149**
			3340-105
		OPA101BM	★**3149**
			3340-53
		REF101	★**3151**
			3403-1
		REF101J	★**3151**
			3402-163
		REF101S	★**3151**
			3402-164
	DY-4	DSTD-101	2015-26
		SVME-101	2027-27
	Fairchild	**F101**	★**4013**
		SSI101A	1469-8
		μA101AM	3346-109
		μA101M	3353-51
	IntSolutions	RL101	2033-21
	LinearTech	LM101A	3364-4
			3330-15
			3346-119
	MicroPwr	MPINA101A	3337-49
		MPINA101S	3340-62
	Motorola	**LM101A**	★**3615**
			3330-16
			3346-111
		MVME101	★**2109**
	National	LM101	3353-52
		LM101A	3330-17
			3346-113
	Raytheon	LM101A	3330-18
			3346-115
	RCA	**CA101**	★**3672**
	SGS	LM101A	3346-95
	Siemens	HKZ101	3399-114
	SiliconG	SG101A	3330-19
			3346-116
	SiliconSys	**SSI101A**	★**3736**
			1468-88
	TeledyneC	CSH101A	3404-80
	TI	TC101	3400-60
	ThirdDomain	RSS-101C	3327-107
		RSS-101M	3327-108
	ThomsonCSF	LM101A	3346-97
	VTC	**VM101**	★**3270**
			1469-23
	WinSystems	MCM-P101	2041-42
1010	**AD**	**ADSP-1010A**	★**1008**
		ADSP-1010AJ	808-1
		ADSP-1010AK	808-2
		ADSP-1010AS	808-3
		ADSP-1010AT	808-4
		ASDP-1010	843-93
	Lattice	**L1010**	★**1092**
			843-96
	LinearTech	LT1010C	3306-33
		LT1010M	3306-34
	LogicDev	LMA1010	843-97
		LMA1010C	808-14
		LMA1010M	808-15
	MicroPwr	**MP1010**	★ **688**
			843-98
		MP1010C	★ **688**
			855-167
	SBE	1010	2013-33
	Signetics	**TDA1010A**	★**3729**
			3318-5
		TEA1010	★**3730**
			3328-44

(Continued)

Base Number	Source	Device	Page-Line
1010	Siliconix	SI1010	3307-92
	TI	**THCT1010**	★**1336**
			843-102
	TRW-LSI	TDC1010	843-104
	Weitek	WTL1010C	891-104
		WTL1010M	891-105
	Western	WD1010	1468-83
10100	Fairchild	F10100	846-66
	Motorola	**MC10100**	★**1123**
			846-69
	Signetics	**10100**	★**1173**
			★**1174**
			846-72
10101	Burr-Brown	MC10101	¶ 388-5
	Fairchild	F10101	846-91
	Hitachi	HD10101	846-93
	Motorola	**MC10101**	★**1123**
			846-95
	Signetics	**10101**	★**1173**
			★**1174**
			846-98
10102	Fairchild	F10102	846-58
	Hitachi	HD10102	846-60
	Motorola	**MC10102**	★**1122**
			846-62
	Signetics	**10102**	★**1173**
			★**1174**
			846-65
10103	Fairchild	F10103	846-25
	Motorola	**MC10103**	★**1122**
			846-28
	Signetics	**10103**	★**1173**
			★**1174**
			846-31
10104	Fairchild	F10104	846-2
		HD10104	846-4
	Hitachi	HD10104	846-5
	Motorola	**MC10104**	★**1122**
			846-7
	PMI	**JM10104**	★**3640**
	Signetics	**10104**	★**1173**
			★**1174**
			846-10
10105	Fairchild	F10105	846-82
	Hitachi	HD10105	846-84
	Motorola	**MC10105**	★**1123**
			846-86
	National	DM10105	846-89
	Signetics	**10105**	★**1173**
			★**1174**
			846-90
10106	Fairchild	F10106	846-50
	Hitachi	HD10106	846-52
	Motorola	**MC10106**	★**1123**
			846-54
	PMI	**JM10106**	★**3640**
	Signetics	**10106**	★**1173**
			★**1174**
			846-57
10107	Fairchild	F10107	846-137
	Hitachi	HD10107	846-139
	Motorola	**MC10107**	★**1123**
			846-141
	Signetics	**10107**	★**1173**
			★**1174**
			846-144
10108	**Signetics**	**10108**	★**1173**
			★**1174**
			846-1
10109	Fairchild	F10109	846-73
	Hitachi	HD10109	846-75
	Motorola	**MC10109**	★**1123**
			846-78
	Signetics	**10109**	★**1173**
			★**1174**
			846-81
1011	LinearTech	LT1011AC	3312-7
		LT1011AM	3312-8
		LT1011C	3312-21
		LT1011M	3312-22
	National	LM1011	3327-133
	Signetics	TDA1011	3318-66
	TI	**THCT1011**	★**1343**
	TRW-LSI	TDC1011	844-103
			3856-115

¶ Indicates page number in Application Note Directory.
★ Indicates additional data is provided on the page noted.

Base Number	Source	Device	Page-Line
10110			
	Fairchild	F10110	846-13
	Hitachi	HD10110	846-17
	Motorola	**MC10110**	**★1122**
			846-20
	Signetics	**10110**	**★1173**
			★1174
			846-24
10111	Fairchild	F10111	846-32
	Hitachi	HD10111	846-36
	Motorola	**MC10111**	**★1123**
			846-39
			¶ 395-3
	Signetics	**10111**	**★1173**
			★1174
			846-43
10112	**Signetics**	**10112**	**★1173**
			★1174
10113	Fairchild	F10113	846-131
	Motorola	**MC10113**	**★1123**
			846-133
	Signetics	**10113**	**★1173**
			★1174
			846-136
10114	Fairchild	F10114	848-14
	Motorola	**MC10114**	**★1131**
			848-20
	Signetics	**10114**	**★1173**
			★1174
			848-28
10115	Fairchild	F10115	848-35
	Motorola	**MC10115**	**★1131**
			848-38
			¶ 358-4
	Signetics	**10115**	**★1173**
			★1174
			848-41
10116	Fairchild	F10116	848-15
	Hitachi	HD10116	848-18
	Motorola	**MC10116**	**★1131**
			848-21
			¶ 358-4
	National	DM10116	848-27
	Signetics	**10116**	**★1173**
			★1174
			848-29
10117	Fairchild	F10117	846-115
	Hitachi	HD10117	846-117
	Motorola	**MC10117**	**★1123**
			846-119
	Signetics	**10117**	**★1173**
			★1174
			846-122
10118	Fairchild	F10118	846-99
	Hitachi	HD10118	846-101
	Motorola	**MC10118**	**★1123**
			846-103
	Signetics	**10118**	**★1173**
			★1174
			846-106
10119	Fairchild	F10119	846-107
	Hitachi	HD10119	846-109
	Motorola	**MC10119**	**★1123**
			846-111
	Signetics	**10119**	**★1173**
			★1174
			846-114
1012	**AD**	**ADSP-1012**	**★1007**
			843-51
		ADSP-1012AJ	**★1007**
			807-121
		ADSP-1012AK	**★1007**
			807-122
		ADSP-1012AS	**★1007**
			807-123
		ADSP-1012AT	**★1007**
			807-124
	Cybersys	1012	2007-1
	LinearTech	LT1012C	3337-31
		LT1012M	3337-51
	Signetics	**NE1012**	**★3708**
			★3729
			3337-29
		SE1012	**★3708**
			3337-30
			(Continued)
1012	**Signetics**	**TEA1012**	**★3730**
	TRW-LSI	TDC1012	844-38
10121	Fairchild	F10121	846-123
	Hitachi	HD10121	846-125
	Motorola	**MC10121**	**★1123**
			846-127
	Signetics	**10121**	**★1173**
			★1174
			846-130
10123	Fairchild	F10123	845-101
	Motorola	**MC10123**	**★1125**
			845-103
			¶ 395-3
	Signetics	**10123**	**★1173**
			★1174
			845-105
10124	Fairchild	F10124	847-147
	Hitachi	HD10124	847-149
	Motorola	**MC10124**	**★1124**
			847-151
			¶ 358-4
	Signetics	**10124**	**★1173**
			★1174
			847-154
10125	Fairchild	F10125	847-138
	Hitachi	HD10125	847-140
	Motorola	**MC10125**	**★1124**
			847-142
			¶ 358-4
	Signetics	**10125**	**★1173**
			★1174
			847-145
10128	**Motorola**	**MC10128**	**★1125**
			845-99
			¶ 358-4
10129	**Motorola**	**MC10129**	**★1131**
			848-33
			¶ 358-4
	Signetics	**10129**	**★1173**
			★1174
			848-34
1013	LinearTech	LT1013AC	3357-214
		LT1013AM	3357-215
		LT1013C	3361-20
		LT1013M	3361-21
	Signetics	**TDA1013A**	**★3729**
			3318-67
	ThomsonCSF	TEB1013	2897-147
10130	Fairchild	F10130	846-153
	Hitachi	HD10130	846-155
	Motorola	**MC10130**	**★1126**
			847-2
	Signetics	**10130**	**★1173**
			★1174
			847-5
10131	Fairchild	F10131	845-110
	Hitachi	HD10131	845-114
	Motorola	**MC10131**	**★1126**
			845-117
	Signetics	**10131**	**★1173**
			★1174
			845-122
10132	Fairchild	F10132	847-12
	Hitachi	HD10132	847-14
	Motorola	**MC10132**	**★1129**
			847-15
	Signetics	**10132**	**★1173**
			★1174
			847-17
10133	Fairchild	F10133	847-22
	Hitachi	HD10133	847-26
	Motorola	**MC10133**	**★1126**
			847-27
	Signetics	**10133**	**★1173**
			★1174
			847-31
10134	Fairchild	F10134	847-6
	Hitachi	HD10134	847-8
	Motorola	**MC10134**	**★1130**
			847-9
	Signetics	**10134**	**★1173**
			★1174
			847-11
10135	Fairchild	F10135	845-136
	Motorola	**MC10135**	**★1126**
			845-138
	Signetics	**10135**	**★1173**
			★1174
			845-141
10136	Burr-Brown	MC10136	¶ 388-5
	Fairchild	F10136	845-53
	Hitachi	HD10136	845-55
	Motorola	**MC10136**	**★1127**
			845-57
	Signetics	**10136**	**★1173**
			★1174
			845-60
10137	Fairchild	F10137	845-63
	Motorola	**MC10137**	**★1127**
			845-65
	Signetics	**10137**	**★1173**
			★1174
			845-67
10138	**Motorola**	**MC10138**	**★1127**
			845-61
10139	**Motorola**	**MCM10139**	**★4124**
			847-41
			3814-15
1014	Fairchild	LM1014	2895-128
		LM1014A	2895-129
	LinearTech	LT1014AC	3369-28
		LT1014AM	3369-29
		LT1014C	3369-33
		LT1014M	3369-34
	National	LM1014	2896-3
	Supertex	HV1014	2829-29
	TRW-LSI	TDC1014	843-158
			2832-22
			2832-23
	Western	WD1014	2878-18
			1469-27
			1469-28
10141	Fairchild	F10141	847-125
			3855-1
	Motorola	**MC10141**	**★1128**
			847-128
			3854-124
	Signetics	**10141**	**★1173**
			★1174
			847-131
			★1173
			★1174
			3854-126
10142	NEC	µPB10142	3832-10
10143	**Motorola**	**MCM10143**	**★4123**
			847-46
			¶ 358-1
			3830-112
10144	**Motorola**	**MCM10144**	**★4123**
			847-61
			3832-50
10145	Fairchild	F10145A	3831-9
		F10145AC	847-47
	Hitachi	HD10145	847-50
			3831-11
	Motorola	**MCM10145**	**★4123**
			847-53
			3831-12
	Signetics	10145	847-54
			3831-13
10146	**Motorola**	**MCM10146**	**★4123**
			847-74
			3834-60
		MCM10146A	**★4123**
			3834-40
10147	Hitachi	HD10147	847-58
			3832-26
	Motorola	**MCM10147**	**★4123**
			847-59
			3832-27
10148	Hitachi	HD10148	847-55
			3832-12
	Motorola	MC10148	847-56
		MCM10148	**★4123**
			3832-11
10149	Burr-Brown	MCM10149	¶ 388-5
	Motorola	**MCM10149**	**★4124**
			847-44
			(Continued)
10149	Motorola	MCM10149	3814-76
		MCM10149-10	**★4124**
			3814-65
		MCM10149A	**★4124**
			3814-72
	Signetics	**10149**	**★1173**
			★1174
			★4166
			847-45
			★1173
			★1174
			★4166
			3814-74
1014E1	TRW-LSI	TDC1014E1C	2046-9
1015	AD	HDD-1015	844-33
			2859-70
		HDD-1015C	2859-71
		HDD-1015M	2859-72
		HDS-1015E	**★3115**
			2858-1
		HDS-1015EM	2858-2
	GI	AY3-1015D	2901-57
	Signetics	**TDA1015**	**★3729**
			3318-68
	Western	WD1015	1468-81
10152	**Motorola**	**MCM10152**	**★4123**
			847-62
			3832-49
10153	Fairchild	F10153	847-23
	Motorola	**MC10153**	**★1126**
			847-28
10154	**Motorola**	**MC10154**	**★1127**
			845-48
10155	**Signetics**	**10155**	**★1173**
			★1174
			847-40
			★1173
			★1174
			3830-111
10158	Fairchild	F10158	847-108
	Motorola	**MC10158**	**★1129**
			847-111
	Signetics	**10158**	**★1173**
			★1174
			847-114
10159	Fairchild	F10159	847-101
	Motorola	**MC10159**	**★1129**
			847-104
	Signetics	**10159**	**★1173**
			★1174
			847-107
1016	**AD**	**ADSP-1016**	**★1007**
			843-64
		ADSP-1016AJ	**★1007**
			807-135
		ADSP-1016AK	**★1007**
			807-136
		ADSP-1016AS	**★1007**
			807-137
		ADSP-1016AT	**★1007**
			807-138
	Lattice	**L1016**	**★1093**
	LinearTech	LT1016M	3312-54
	Motorola	UAA1016A	3405-131
		UAA1016B	3405-132
	Sharp	LZ1016AM	3309-69
	Signetics	TDA1016	3323-151
	Supertex	HV1016	2829-31
	TRW-LSI	TDC1016	844-18
			844-31
			844-34
		TDC1016-10	2856-29
		TDC1016-8	2858-19
		TDC1016-9	2858-18
		TDC1016J	¶ 396-4
	Weitek	WTL1016	843-77
10160	Fairchild	F10160	848-51
	Hitachi	HD10160	848-53
	Motorola	**MC10160**	**★1132**
			848-55
	Signetics	**10160**	**★1173**
			★1174
			848-58

Arranged alphanumerically from left to right.

PART NUMBER INDEX

Base Number	Source	Device	Page-Line
10161	Fairchild	F10161	845-79
	Hitachi	HD10161	845-81
	Motorola	**MC10161**	★**1130**
			845-83
	Signetics	**10161**	★**1173**
			★**1174**
			845-86
10162	Fairchild	F10162	845-70
	Hitachi	HD10162	845-72
	Motorola	**MC10162**	★**1130**
			845-75
	Signetics	**10162**	★**1173**
			★**1174**
			845-78
10163	**Motorola**	**MC10163**	★**1132**
			848-5
			2878-21
10164	Fairchild	F10164	847-115
	Hitachi	HD10164	847-117
	Motorola	**MC10164**	★**1129**
			847-119
	Signetics	**10164**	★**1173**
			★**1174**
			847-122
10165	Fairchild	F10165	848-43
	Motorola	**MC10165**	★**1131**
			848-45
	Signetics	**10165**	★**1173**
			★**1174**
			848-48
10166	**Motorola**	**MC10166**	★**1132**
			845-31
10168	Fairchild	F10168	847-18
	Motorola	**MC10168**	★**1126**
			847-20
1016P8	National	PL1016P8C	4469-51
1017	**Lattice**	**L1017**	★**1094**
	LinearTech	LT1017C	3313-36
		LT1017M	3313-37
	National	LM1017	2875-33
			3324-106
10170			
	Motorola	**MC10170**	★**1132**
			848-50
10171	Fairchild	F10171	845-93
	Motorola	**MC10171**	★**1130**
			845-95
	Signetics	**10171**	★**1173**
			★**1174**
			845-98
10172	Fairchild	F10172	845-87
	Motorola	**MC10172**	★**1130**
			845-89
	Signetics	**10172**	★**1173**
			★**1174**
			845-92
10173	Fairchild	F10173	847-32
	Motorola	**MC10173**	★**1129**
			847-35
	Signetics	**10173**	★**1173**
			★**1174**
			847-37
10174	Fairchild	F10174	847-93
	Hitachi	HD10174	847-95
	Motorola	**MC10174**	★**1129**
			847-97
	Signetics	**10174**	★**1173**
			★**1174**
			847-100
10175	Fairchild	F10175	846-145
	Hitachi	HD10175	846-147
	Motorola	**MC10175**	★**1126**
			846-149
	Signetics	**10175**	★**1173**
			★**1174**
			846-152
10176	Burr-Brown	MC10176	¶ 388-5
			¶ 388-5
	Fairchild	F10176	845-124
	Motorola	**MC10176**	★**1126**
			845-127
	Signetics	**10176**	★**1173**
			★**1174**
			845-130
10177	Fairchild	F10177	847-133
	Motorola	**MC10177**	★**1124**
			847-134
10178	**Motorola**	**MC10178**	★**1127**
			845-49
10179	Fairchild	F10179	845-2
	Hitachi	HD10179	845-4
	Motorola	**MC10179**	★**1132**
			845-5
	Signetics	**10179**	★**1173**
			★**1174**
			845-8
1018	LinearTech	LT1018C	3313-38
		LT1018M	3313-39
	Signetics	SAB1018	891-51
		SAB1018A	891-52
	TRW-LSI	TDC1018	844-15
			¶ 394-3
			2855-38
10180	Fairchild	F10180	845-9
	Hitachi	HD10180	845-11
	Motorola	**MC10180**	★**1132**
			845-12
	Signetics	**10180**	★**1173**
			★**1174**
			845-15
10181	Fairchild	F10181	845-22
	Hitachi	HD10181	845-24
	Motorola	**MC10181**	★**1132**
			845-25
	Signetics	**10181**	★**1173**
			★**1174**
			845-28
10182	**Motorola**	**MC10182**	★**1132**
			845-16
10183	**Motorola**	**MC10183**	★**1132**
			845-20
10186	Fairchild	F10186	845-131
	Motorola	**MC10186**	★**1126**
			845-133
10188	**Motorola**	**MC10188**	★**1124**
			845-37
	Signetics	**10188**	★**1173**
			★**1174**
			845-39
10189	**Motorola**	**MC10189**	★**1124**
			845-40
	Signetics	**10189**	★**1173**
			★**1174**
			845-42
1019	National	LM1019	3325-70
	TRW-LSI	TDC1019	844-29
			¶ 390-7
			2838-1
		TDC1019-1	844-30
			2838-2
		TDC1019S-1	2838-3
10190			
	Motorola	**MC10190**	★**1124**
			847-135
10191	**Motorola**	**MC10191**	★**1124**
			847-155
10192	Fairchild	F10192	845-106
	Motorola	MC10192	845-108
	Signetics	**10192**	★**1173**
			★**1174**
			845-109
10193	**Motorola**	**MC10193**	★**1132**
			848-6
			2878-22
10194	Motorola	MC10194	848-12
			¶ 398-11
10195	**Motorola**	**MC10195**	★**1124**
			845-43
10197	**Motorola**	**MC10197**	★**1122**
			846-11
10198	**Motorola**	**MC10198**	★**1131**
			847-123
1019E1	TRW-LSI	TDC1019E1C	2046-13
102	Brooktree	BT102	2855-27
			1465-106
	Burr-Brown	**INA102**	★**3150**
			3306-72
		OPA102AM	★**3149**
			3340-106
			(Continued)
102	**Burr-Brown**	**OPA102BM**	★**3149**
			3340-54
		PGA102	★**3150**
			3306-117
		PGA102A	★**3150**
			3340-37
		PGA102B	★**3150**
			3339-11
		PGA102S	★**3150**
			3339-12
	Cherry	CS102	891-116
			3320-12
	Comlinear	CLC102	3307-139
	DY-4	DSTD-102	2015-27
		DVME-102	2027-23
	Ferranti	ZNP102	3400-86
	Microlog	FG-102	2031-28
	MilerTron	PDC-102	2015-10
	Motorola	MFOE102F	¶ 414-1
		MMBTS102	3404-139
	National	LM102	3329-34
	TI	TC102	3400-49
	ThirdDomain	RSS-102C	3327-105
		RSS-102M	3327-106
	WinSystems	MCM-P102	2041-41
		MCM-S102	2040-15
1020	ITT	SAA1020	3326-116
	National	DAC1020	2857-50
		DAC1020C	2857-51
	SBE	1020	2013-29
	Signetics	**TDA1020**	★**3729**
			3318-6
	Siliconix	SI1020	3307-93
10200			
	Samsung	**KG10200**	★**4746**
			4454-29
10209	Hitachi	HD10209	846-76
1021	LinearTech	LT1021-10	3402-162
		LT1021-5	3402-87
		LT1021-7	3402-160
	National	ADC1021C	2839-18
		DAC1021	2859-13
		DAC1021C	2859-14
	Signetics	TEA1021	3378-115
	TRW-LSI	TDC1021	843-139
			2832-3
			2832-4
10210	Fairchild	F10210	846-14
	Hitachi	HD10210	846-18
	Motorola	**MC10210**	★**1122**
			846-21
	Signetics	**10210**	★**1173**
			★**1174**
			846-44
10211	Fairchild	F10211	846-33
	Hitachi	HD10211	846-37
	Motorola	**MC10211**	★**1123**
			846-40
	Signetics	**10211**	★**1173**
			★**1174**
			846-45
10212	Fairchild	F10212	846-46
	Motorola	**MC10212**	★**1123**
			846-48
10216	**Motorola**	**MC10216**	★**1131**
			848-22
			¶ 358-4
	Signetics	**10216**	★**1173**
			★**1174**
			848-30
1022	LinearTech	LT1022AC	3340-59
		LT1022AM	3340-60
		LT1022CH	3343-27
		LT1022CNB	3344-21
		LT1022M	3343-28
	National	DAC1022	2859-46
		DAC1022C	2859-47
	Signetics	TDA1022	3320-138
			3398-60
	TRW-LSI	TDC1022	843-7
			¶ 352-3
			¶ 359-15
			¶ 360-5
			¶ 360-10
1023	NEC	μPC1023	3319-10
	Signetics	**TDA1023**	★**3730**
			3405-138
	TRW-LSI	TDC1023	843-11
10230	Hitachi	HD10230	846-156
10231	Fairchild	F10231	845-111
	Hitachi	HD10231	845-115
	Motorola	**MC10231**	★**1127**
			845-118
	Signetics	**10231**	★**1173**
			★**1174**
			845-123
1024	**AD**	**ADSP-1024**	★**1007**
			843-80
		ADSP-1024AJ	★**1007**
			807-151
		ADSP-1024AK	★**1007**
			807-152
	CharlesRiver	CM-1024	2043-17
		DM-1024	2043-15
		VCM-1024	2045-28
		VEM-1024	2045-30
	Dense-Pac	**DPS1024**	★**4008**
			3847-81
			3847-97
			3848-10
	NEC	μPC1024	3319-11
	Reticon	RL1024C	3400-21
		RL1024G	3400-22
		RL1024H	3400-23
		RL1024S	3400-24
		RL1024SF	3400-25
		RL1024SFX	3400-45
		SAD1024	¶ 431-4
		SAD1024A	¶ 416-7
			¶ 416-14
			¶ 431-8
	Signetics	**TDA1024**	★**3730**
			3405-139
	Telefunken	TEA1024	3405-140
10248	**Dense-Pac**	**DPV10248**	★**4008**
			3825-24
1025	AD	HDS-1025	2856-22
		HDS-1025M	2856-23
	Dense-Pac	**DPS1025**	★**4008**
			3847-95
	TRW-LSI	TDC1025	844-21
			2836-16
1025E1	TRW-LSI	TDC1025E1C	2046-8
1026	**Dense-Pac**	**DPS1026**	★**4008**
			3847-80
			3847-96
			3848-9
	NEC	μPC1026	3322-116
1027	CentData	B1027	2036-20
	Signetics	**SAA1027**	★**3730**
	TRW-LSI	TDC1027	2833-7
1028	NEC	μPC1028	3322-10
	Signetics	TDA1028	3307-130
	TRW-LSI	TDC1028	844-115
			¶ 359-14
10280			
	Toko	TK10280	3322-81
10283	Toko	TK10283	3322-82
10287	**Motorola**	**MC10287**	★**1132**
			845-18
1029	**Signetics**	**TDA1029**	★**3727**
			2827-96
			3307-131
			3328-29
	TRW-LSI	TDC1029	843-153
			2832-21
			2832-34
1029E1	TRW-LSI	TDC1029E1C	2046-7
103	Brooktree	BT103	2855-28
			1465-107
	Burr-Brown	**OPA103**	★**3149**
			3332-20
			3332-37
		OPA103AM	★**3149**
			(Continued)

¶ Indicates page number in Application Note Directory.
★ Indicates additional data is provided on the page noted.

Base Number	Source	Device	Page-Line
103	Burr-Brown	OPA103AM	3341-3
			3340-93
		OPA103BM	**★3149**
			3341-2
			3340-90
		OPA103CM	**★3149**
			3340-48
		OPA103DM	**★3149**
			3340-46
	Comlinear	CLC103A	3306-56
			3348-68
			3331-4
			3330-84
			3334-267
		CLC103AI	3357-89
		CLC103AM	3306-57
			3348-69
			3331-5
			3330-85
			3334-268
	DY-4	DSTD-103	2015-28
	Ferranti	ZNP103	3400-87
	Motorola	MMBTS103	3404-140
	National	LM103	3402-14
	OEI	AH103J	3346-25
		AH103L	3344-24
		AH103S	3344-26
	Signetics	**PLS103**	**★4154**
			4473-45
	TI	TC103	3400-65
1030	CentData	B1030	2036-2
	Sharp	LZ1030M	3311-43
	ThomsonCSF	TEA1030	3325-47
	TRW-LSI	TDC1030	3809-120
10301	Enterprise	10301	2039-28
10303	Enterprise	10303	2039-8
1031	CentData	B1031	2036-8
	LinearTech	LT1031	3403-17
	NEC	μPC1031	3326-129
10311	Toko	TK10311	3321-106
10315	Motorola	MC10315	¶ 389-17
			¶ 430-7
		MC10315L	**★3629**
			2833-2
10317	Motorola	MC10317	¶ 389-17
			¶ 430-7
		MC10317L	**★3629**
			2833-3
10318	**Motorola**	**MC10318**	**★3630**
			2851-40
		MC10318-9	**★3630**
			2850-38
		MC10318C-6	**★3630**
			2854-53
		MC10318C-7	**★3630**
			2854-23
10319	**Motorola**	**MC10319**	**★3629**
			844-7
			2837-48
1032	LinearTech	LT1032	2881-53
	NEC	μPC1032	3319-12
	Sharp	LZ1032AM	3309-71
	Signetics	**SAF1032**	**★3699**
			3323-62
		SAF1032P	**★3728**
	Weitek	WTL1032	844-56
		WTL1032A	854-26
		WTL1032AC	854-27
			1469-77
		WTL1032AM	854-28
			1469-78
		WTL1032C	887-19
			1469-79
		WTL1032M	887-20
			1469-80
1033	LinearTech	LT1033C	3394-60
		LT1033M	3394-61
	TRW-LSI	TDC1033	844-46
			¶ 352-3
			¶ 359-15
			¶ 360-10
	Weitek	WTL1033	844-57
		WTL1033A	854-29
			(Continued)
1033	Weitek	WTL1033AC	854-24
			1469-81
		WTL1033AM	854-25
			1469-82
		WTL1033C	887-17
			1469-83
		WTL1033M	887-18
			1469-84
1034	CentData	B1034	2021-26
	Ferranti	ZN1034E	3383-65
			¶ 428-14
	LinearTech	LT1034	3402-3
	Signetics	SA1034	890-87
		SAB1034	**★1173**
			848-72
		SAF1034	**★1173**
			848-74
	TRW-LSI	TDC1034	843-138
			843-147
			¶ 386-7
			¶ 394-3
			2849-11
1035	CentData	B1035	2036-21
	LinearTech	LT1035	3392-73
	National	LM1035	3316-120
10350			
	Toko	TK10350	3322-97
1036	LinearTech	LT1036C	3392-67
		LT1036M	3392-68
	National	LM1036	3319-106
10360			
	Toko	TK10360	3319-33
1037	LinearTech	LT1037AC	3341-29
		LT1037AM	3341-30
	National	LM1037	3328-27
	Siemens	TDA1037	3318-4
	Signetics	**NE1037**	**★3708**
			★3729
			3337-53
		SE1037	**★3708**
			3337-52
10371	Rockwell	10371	2901-56
			¶ 413-13
1038	LinearTech	LT1038C	3393-9
		LT1038M	3393-10
	National	LM1038	3328-28
1039	**Signetics**	**SAF1039**	**★3699**
			3323-63
		SAF1039P	**★3728**
		TEA1039	3398-107
104	AnalogSys	MK104	3398-99
	Brooktree	BT104	2866-12
	Burr-Brown	**INA104**	**★3150**
			3306-100
		OPA104AM	**★3149**
			3332-18
			3343-45
		OPA104BM	**★3149**
			3332-10
			3340-82
		OPA104CM	**★3149**
			3332-5
			3340-80
	Comlinear	CLC104AI	3307-140
		CLC104AM	3307-141
	LSIComp	**RDD104**	**★1099**
			816-52
			890-108
	National	CIM-104	2030-29
		LM104	3395-5
	OKI	MSA104	3307-5
	OEI	AH104J	3346-26
		AH104L	3344-25
		AH104S	3344-27
	SGS	M104	3326-16
	SiliconG	SG104	3395-7
	SiliconSys	**SSI104**	**★3736**
			1468-87
		SSI104L	**★3736**
			2896-106
	TI	TC104	3400-67
			(Continued)
104	ThomsonCSF	LM104	3395-10
	VTC	**VM104**	**★3270**
			1468-115
		VM104L	**★3270**
			1468-116
	Weitek	WTL104A	854-17
1040	Ferranti	ZN1040AE	¶ 356-5
		ZN1040E-RED	862-2
	LinearTech	LTC1040C	3313-30
		LTC1040M	3313-31
	National	LM1040	3319-108
10400			
	Samsung	**KG10400**	**★4746**
			4454-30
10402	Fairchild	F10402	847-48
10408	GESemi	IGC10408	4445-19
1041	CentData	B1041	2036-24
	LinearTech	LTC1041	3398-108
	ThomsonCSF	TDA1041	2896-12
10411	Toko	TK10411	3319-34
10414	Fairchild	F10414C	3832-45
		F10414M	3832-48
	Hitachi	HM10414	3832-46
		HM10414-1	3832-43
	National	DM10414	847-64
			3832-52
		DM10414A	3832-47
10415	AMD	AM10415-10	3834-32
		AM10415A	3834-46
			3834-55
		AM10415M	3834-71
		AM10415SA	3834-43
			3834-47
	Fairchild	**F10415**	**★4014**
			847-71
			3834-67
		F10415A	**★4014**
			847-72
		F10415AC	**★4014**
			3834-48
		F10415C	**★4014**
			3834-35
	Fujitsu	MBM10415AH	3834-49
	Motorola	**MCM10415**	**★4123**
			847-75
		MCM10415-10	**★4123**
			3834-37
		MCM10415-15	**★4123**
			3834-44
	National	DM10415	847-77
			3834-68
		DM10415A	3834-50
	Signetics	10415	847-78
		10415A	3834-51
		10415B	3834-38
10416	Fairchild	F10416	847-42
		F10416C	3814-66
1042	**Fairchild**	**F1042**	**★4014**
	Motorola	SAA1042	2896-24
		SAA1042A	2896-23
	NEC	μPC1042	3396-41
	Plessey	TAB1042	3372-1
	Signetics	**TEA1042**	**★3728**
			3382-45
	TRW-LSI	TDC1042	844-47
			¶ 352-3
			¶ 359-15
			¶ 360-10
10420			
	Toko	TK10420	3322-63
10422	**Fairchild**	**F10422**	**★4014**
			3832-104
		F10422C	**★4014**
			3832-105
	Fujitsu	MBM10422A-5	3832-92
		MBM10422A-7	847-67
			3832-95
	Hitachi	HM10422	3832-112
		HM10422-7	3832-96
	Motorola	**MCM10422**	**★4123**
			847-68
		MCM10422-10	**★4123**
			3832-107
		MCM10422-15	**★4123**
			3833-2
			(Continued)
10422	**Motorola**	**MCM10422-7**	**★4123**
			3832-97
	National	DM10422	847-69
			3833-3
		DM10422A	3832-108
	NEC		
		IPB10422-10	3832-109
		IPB10422-70	3832-98
	Signetics	10422	3833-5
		10422A	3833-4
		10422B	3832-110
1043	LinearTech	LTC1043	3306-73
	Plessey	TAB1043	3372-2
	Signetics	**SAA1043P**	**★3731**
			3326-101
		TEA1043	3378-116
	TRW-LSI	TDC1043	843-105
1044	CentData	B1044	2035-60
	LinearTech	LTC1044C	3405-30
		LTC1044M	3405-31
	Signetics	**SAA1044**	**★3731**
		TEA1044	3378-117
	TRW-LSI	TDC1044	2832-8
1045	CentData	B1045	2023-36
	ITT	TEA1045	3377-1
1046	Siemens	TDA1046	3321-35
	Signetics	**TEA1046**	**★3728**
			3382-46
	TRW-LSI	TDC1046	843-156
			2837-47
1047	Siemens	TDA1047	3322-32
	TRW-LSI	TDC1047	844-5
			2833-5
10470	AMD	AM10470AC	3839-80
		AM10470AM	3839-88
		AM10470C	3839-96
		AM10470M	3839-103
		AM10470SAC	3839-66
		AM10470SAM	3839-72
	Fairchild	F10470	847-84
			3839-97
		F10470A	3839-81
	Fujitsu	MBM10470A-10	847-85
			3839-58
		MBM10470A-15	847-86
			3839-67
		MBM10470A-20	847-87
			3839-73
	Hitachi	HM10470	3839-82
		HM10470-1	3839-68
	Motorola	**MCM10470-10**	**★4123**
			3839-59
		MCM10470-15	**★4123**
			3839-69
		MCM10470-25	**★4123**
			3839-83
	National	DM10470	847-88
			3839-84
		DM10470A	847-89
			3839-70
		DM10470L	847-90
			3839-85
	NEC		
		IPB10470-10	3839-60
		IPB10470-15	3839-71
		IPB10470-90	3839-54
	Signetics	10470	3839-98
		10470A	3839-86
10474	AMD	AM10474AC	3835-39
		AM10474AM	3835-46
		AM10474C	3835-55
		AM10474M	3835-59
	Fairchild	F10474C	847-73
			3835-60
	Fujitsu	MB10474A-15	3835-40
		MBM10474A-10	3835-32
	Hitachi	HM10474	3835-41
		HM10474-10	3835-28
			(Continued)

Arranged alphanumerically from left to right.

PART NUMBER INDEX

Base Number	Source	Device	Page-Line
10474	**Motorola**	**MCM10474**	★ **4123**
			847-81
		MCM10474-10	★ **4123**
			3835-33
		MCM10474-15	★ **4123**
			3835-43
	National	DM10474	3835-56
		DM10474A	3835-44
	NEC		
		IPB10474-10	3835-34
		IPB10474-15	3835-45
		IPB10474-80	3835-27
	Signetics	10474	847-79
			847-82
		10474A	847-80
			847-83
1047E1	TRW-LSI	TDC1047E1C	2046-10
1048	Siemens	TDA1048	3321-16
	ThomsonCSF	TDA1048	3321-17
	TRW-LSI	TDC1048	844-19
			¶ 393-13
			2833-24
			2837-44
10480	AMD	AM10480	3844-6
		AM10480A	3843-107
	Fairchild	F10480	847-92
			3844-20
	Fujitsu	**MBM10480**	★ **4021**
			3844-7
		MBM10480-15	★ **4021**
			3843-105
		MBM10480-25	★ **4021**
			3844-8
	Hitachi	HM10480	3844-9
		HM10480-15	3843-103
	Motorola	MCM10480-25	3844-5
	Toko	TK10480	3322-64
10484	Fujitsu	MBM10484-15	3840-119
	Motorola	MCM10484	847-91
		MCM10484-15	3840-117
		MCM10484-25	3841-11
1048E1	TRW-LSI	TDC1048E1C	2046-12
10490	Fujitsu	MBM10490-25	3846-91
105	Brooktree	BT105	2866-13
	Burr-Brown	**OPA105**	★ **3154**
			3332-38
		OPA105UM	★ **3154**
			3340-49
		OPA105V	★ **3154**
			3340-47
		OPA105W	★ **3154**
			3340-45
	Cromemco	CS-105E	1811-18
	DY-4	DVME-105	2027-24
	Fairchild	μA105M	3394-10
	Motorola	MMBTS105	3404-141
	National	LM105	3394-11
	OKI	MSA105	3307-6
	Siemens	TCA105	3404-161
	Signetics	**PLC105**	★ **4154**
		PLS105	★ **4154**
			★ **4155**
			4474-59
		PLS105A	★ **4154**
			★ **4155**
			4474-58
	SiliconG	SG105	3394-13
	SiliconSys	SSI105	1468-108
	ThomsonCSF	LM105	3394-15
1050	National	DT1050	3323-134
	Western	WD1050	1468-49
10500	DDC	DRC10500	3403-97
	Motorola	MC10500	846-70
10501	**Fairchild**	**F10501**	★ **615**
			846-92
	Motorola	MC10501	846-96
10502	**Fairchild**	**F10502**	★ **615**
			846-59
	Motorola	MC10502	846-63
10503	Fairchild	F10503	846-26
	Motorola	MC10503	846-29
10504	**Fairchild**	**F10504**	★ **615**
			846-3
	Motorola	MC10504	846-8
10505	Fairchild	F10505	846-83
	Motorola	MC10505	846-87
10506	Fairchild	F10506	846-51
	Motorola	MC10506	846-55
10507	Fairchild	F10507	846-138
	Motorola	MC10507	846-142
10509	Fairchild	F10509	846-74
	Motorola	MC10509	846-79
1051	National	DT1051	3323-110
10510	Fairchild	F10510	846-15
105100	Fairchild	F105100	846-67
10511	Fairchild	F10511	846-34
10513	Fairchild	F10513	846-132
	Motorola	MC10513	846-134
10514	**Fairchild**	**F10514**	★ **615**
			848-16
	Motorola	MC10514	848-23
10515	**Fairchild**	**F10515**	★ **615**
			848-36
	Motorola	MC10515	848-39
10516	**Fairchild**	**F10516**	★ **615**
			848-17
	Motorola	MC10516	848-24
10517	Fairchild	F10517	846-116
	Motorola	MC10517	846-120
10518	Fairchild	F10518	846-100
	Motorola	MC10518	846-104
10519	Fairchild	F10519	846-108
	Motorola	MC10519	846-112
1052	LinearTech	LTC1052C	3335-14
		LTC1052M	3335-15
	National	DT1052	3323-132
10520	DDC	DRC-10520	3403-125
		DRC10520	844-111
10521	Fairchild	F10521	846-124
	Motorola	MC10521	846-128
10523	**Fairchild**	**F10523**	★ **615**
			845-102
10524	**Fairchild**	**F10524**	★ **615**
			847-148
	Motorola	MC10524	847-152
10525	**Fairchild**	**F10525**	★ **615**
			847-139
	Motorola	MC10525	847-143
1053	National	DT1053	3323-135
10530	Fairchild	F10530	846-154
	Motorola	MC10530	847-3
10531	Fairchild	F10531	845-112
	Motorola	MC10531	845-119
	Toko	TK10531	3319-36
10532	Fairchild	F10532	847-13
	Motorola	MC10532	847-16
10533	**Fairchild**	**F10533**	★ **615**
			847-24
	Motorola	MC10533	847-29
10534	**Fairchild**	**F10534**	★ **615**
			847-7
	Motorola	MC10534	847-10
10535	**Fairchild**	**F10535**	★ **615**
			845-137
	Motorola	MC10535	845-139
10536	Fairchild	F10536	845-54
	Motorola	MC10536	845-58
10537	Fairchild	F10537	845-64
	Motorola	MC10537	845-66
10538	Motorola	MC10538	845-62
1054	National	DT1054	3323-111
	SGS	TDA1054M	3324-31
			¶ 416-12
10541	Fairchild	F10541	847-126
	Motorola	MC10541	847-129
			3854-125
	Toko	TK10541	3319-32
10544	Motorola	MCM10544	847-63
			3832-51
10545	Fairchild	F10545A	3831-10
		F10545AM	847-49
	Motorola	MCM10545	3831-16
10546	Motorola	MCM10546	847-76
			3834-72
10547	Motorola	MCM10547	847-60
10548	Motorola	MCM10548	847-57
1055	National	DT1055	3323-133
	Signetics	TEA1055	3382-47
10553	Fairchild	F10553	847-25
	Motorola	MC10553	847-30
10554	Motorola	MC10554	845-50
10558	**Fairchild**	**F10558**	★ **615**
			847-109
	Motorola	MC10558	847-112
10559	Fairchild	F10559	847-102
	Motorola	MC10559	847-105
1056	National	DT1056	3323-136
10560	Fairchild	F10560	848-52
	Motorola	MC10560	848-56
10561	**Fairchild**	**F10561**	★ **615**
			845-80
	Motorola	MC10561	845-84
10562	**Fairchild**	**F10562**	★ **615**
			845-71
	Motorola	MC10562	845-76
	Toko	TK10562	3319-37
10563	Motorola	MC10563	848-7
			2878-23
10564	Fairchild	F10564	847-116
	Motorola	MC10564	847-120
10565	Fairchild	F10565	848-44
	Motorola	MC10565	848-46
10566	Fairchild	F10566	845-29
	Motorola	MC10566	845-32
10568	Fairchild	F10568	847-19
	Motorola	MC10568	847-21
1057	National	DT1057	3323-137
	Signetics	**SAA1057**	★ **3727**
			★ **3733**
			3321-118
			3375-132
10570	Fairchild	F10570	848-49
	Toko	TK10570	3319-35
10571	Fairchild	F10571	845-94
	Motorola	MC10571	845-96
10572	Fairchild	F10572	845-88
	Motorola	MC10572	845-90
10573	Fairchild	F10573	847-33
10574	Fairchild	F10574	847-94
	Motorola	MC10574	847-98
10575	Fairchild	F10575	846-146
	Motorola	MC10575	846-150
10576	Fairchild	F10576	845-125
	Motorola	MC10576	845-128
10578	Motorola	MC10578	845-51
10579	Fairchild	F10579	845-3
	Motorola	MC10579	845-6
1058	**Signetics**	**TEA1058T**	★ **3730**
			3328-45
10580	Fairchild	F10580	845-10
	Motorola	MC10580	845-13
10581	Fairchild	F10581	845-23
	Motorola	MC10581	845-26
10582	Motorola	MC10582	845-17
10586	Fairchild	F10586	845-132
	Motorola	MC10586	845-134
1059	LinearTech	LTC1059C	3398-23
		LTC1059M	3398-24
10590			
	Motorola	MC10590	847-136
10591	Motorola	MC10591	847-156
10592	Fairchild	F10592	845-107
10593	Motorola	MC10593	848-8
			2878-24
10594	Motorola	MC10594	848-13
10595	Motorola	MC10595	845-44
10597	Motorola	MC10597	846-12
106	AnalogSys	MA-106	¶ 405-18
		MA106	3318-205
	Brooktree	BT106	2854-17
	Burr-Brown	**OPA106U**	★ **3154**
			3332-21
			3340-44
		OPA106V	★ **3154**
			(Continued)
106	Burr-Brown	OPA106V	3332-12
			3340-43
		OPA106W	★ **3154**
			3332-8
			3340-42
	National	LM106	3312-27
	SGS	M106	3327-115
	Telefunken	U106	3405-141
		U106BS	¶ 424-16
	TI	**LM106**	★ **719**
			3312-33
1060	Ferranti	ZN1060E	3395-107
	Holt	HI1060	2874-59
	IPS	**TDA1060**	★ **3599**
			3395-147
	LinearTech	LTC1060	3398-25
	NEC	μPC1060	3402-70
	Signetics	**SAA1060**	★ **3726**
			★ **3733**
			2874-116
		TEA1060	★ **3728**
			3379-39
	Telmos	TML1060	843-164
			2832-31
10600			
	Samsung	**KG10600**	★ **4746**
			4454-31
	Toko	TK10600	3322-58
1061	LinearTech	LTC1061C	3398-26
		TTC1061M	3398-29
	Signetics	**SAA1061**	★ **3726**
			★ **3733**
			2874-117
		TEA1061	★ **3728**
			3379-40
10610	Fairchild	F10610	846-16
	Motorola	MC10610	846-22
	Toko	TK10610	3322-80
10611	Enterprise	10611	2041-22
	Fairchild	F10611	846-35
	Motorola	MC10611	846-41
10612	Fairchild	F10612	846-47
	Motorola	MC10612	846-49
10616	Motorola	MC10616	848-25
1062	LinearTech	LTC1062C	3398-27
		LTC1062M	3398-28
	Signetics	**SAA1062**	★ **3726**
			2874-65
	Telefunken	TDA1062	¶ 415-5
		TDA1062S	3322-152
1063	**Signetics**	**SAA1063**	★ **3726**
			★ **3733**
			2876-46
10630			
	Toko	TK10630	3321-126
10631	**Fairchild**	**F10631**	★ **615**
			845-113
	Motorola	MC10631	845-120
1064	Davidge	DPC-1064	2021-23
	Weitek	WTL1064	844-48
			1469-60
		WTL1064A	854-18
			1469-61
10640			
	Toko	TK10640	3316-178
1065	Weitek	WTL1065	844-49
			1469-62
		WTL1065A	854-19
			1469-63
1066	Ferranti	ZN1066	¶ 427-16
		ZN1066E	3395-108
		ZN1066J	3395-109
	Weitek	WTL1066	844-102
1067	**Signetics**	**TEA1067**	★ **3703**
			★ **3728**
			3379-41
10687	Motorola	MC10687	845-19
107	AnalogSys	MW107	3383-14
	LinearTech	LM107	3346-98
			(Continued)

¶ Indicates page number in Application Note Directory.
★ Indicates additional data is provided on the page noted.

Base Number	Source	Device	Page-Line
107	Microlog	FG-107	2031-10
			2031-13
	National	LM107	3346-99
	SiliconG	SG107	3346-101
	TI	**LM107**	★ **718**
			3346-103
	ThomsonCSF	LM107	3346-104
1070	Intech	TML1070	¶ 388-7
			¶ 389-12
	Telmos	TML1070	844-3
			2833-10
	TI	TMS1070	1451-77
			1413-24
10706	Rockwell	10706	¶ 413-13
1071	Telmos	TML1071	844-9
			2833-4
10710			
	Toko	TK10710	3322-59
1072	**Hughes**	**HHGA1072**	★ **683**
			4447-24
		HVGA1072	★ **683**
			4447-23
	Signetics	**TDA1072**	★ **3695**
			★ **3727**
			3321-37
	Telefunken	TDA1072	3321-42
	Telmos	TML1072	844-6
			2833-8
1073	Telmos	TML1073	844-8
			2833-9
1074	**Signetics**	**TDA1074A**	★ **3727**
			3316-123
			3401-81
1075	ITT	SAA1075	3325-75
	Signetics	**TEA1075**	★ **3704**
			★ **3728**
			3382-95
10756	GESemi	IGC10756	4445-20
10764	Enterprise	10764	2042-7
1077	Signetics	SAB1077	891-43
			3376-89
108	Brooktree	BT108	2854-4
	Fairchild	μA108	3347-5
		μA108AM	3342-30
		μA108M	3346-50
	Intersil	ICL108LN	3346-46
		LM108	★ **3600**
			★ **3601**
			3349-2
			3346-52
		LM108A	★ **3600**
			★ **3601**
			3342-32
	LinearTech	LM108	3346-53
		LM108A	3342-33
	MicroPwr	**MP108**	★ **688**
			★ **3607**
			3346-54
		MP108A	★ **688**
			★ **3607**
			3342-34
	Motorola	**LM108**	★ **3615**
			3347-1
			3346-56
		LM108A	★ **3615**
			3342-36
	National	CIM-108	2030-30
		LM108	3347-2
			3346-58
		LM108A	3342-38
	PMI	**PM-108**	★ **3636**
			★ **3639**
			3347-3
			3346-60
		PM-108A	★ **3636**
			★ **3639**
			3342-40
			(Continued)
108	SGS	M108	3320-159
	SiliconSys	**SSI108**	★ **3736**
			1468-109
	ThomsonCSF	LM108	3347-4
			3346-61
		LM108A	3342-41
		LM108M	3346-62
	VTC	**VM108**	★ **3270**
			1468-117
1080	**AD**	**ADSP-1080**	★ **1007**
			843-17
		ADSP-1080AJ	★ **1007**
			807-111
		ADSP-1080AK	★ **1007**
			807-112
		ADSP-1080AS	★ **1007**
			807-113
		ADSP-1080AT	★ **1007**
			807-114
	Cybersys	1080	2005-38
	Harris	HI1080	¶ 388-9
			¶ 389-10
	Signetics	**TEA1080**	★ **3703**
			★ **3728**
			3380-108
10800			
	Motorola	MC10800	845-21
			¶ 382-7
			1449-97
			1411-17
	Samsung	**KG10800**	★ **4746**
			4454-32
10801	Motorola	MC10801	1449-102
			¶ 377-1
10803	Motorola	MC10803	¶ 377-1
10804	Motorola	MC10804	1449-98
10805	Motorola	MC10805	1449-99
10806	Motorola	MC10806	1449-104
10807	Motorola	MC10807	1449-100
10808	Motorola	MC10808	1449-103
10809	Enterprise	10809	2019-10
			2039-41
1081	**AD**	**ADSP-1081**	★ **1007**
			843-18
		ADSP-1081AJ	★ **1007**
			807-107
		ADSP-1081AK	★ **1007**
			807-108
		ADSP-1081AS	★ **1007**
			807-109
		ADSP-1081AT	★ **1007**
			807-110
10812	Enterprise	10812	2017-31
			2039-40
1083	Telefunken	TDA1083	3321-101
			¶ 415-3
			¶ 415-15
1085	Cybersys	1085	2007-2
	Harris	HI1085	¶ 389-10
	Motorola	TDA1085A	2895-130
	Plessey	TDA1085A	2895-132
			¶ 424-9
1087	Telefunken	TEA1087	3398-5
10888	Enterprise	10888	2025-40
109	AnalogSys	MM109	3400-123
	DY-4	DSTD-109	2042-40
	Fairchild	μA109M	3384-57
	IPS	IP109	3384-85
		IP109A	3384-86
	Motorola	**LM109H**	★ **3622**
			3384-18
		LM109K	★ **3622**
			3384-59
	National	LM109	¶ 428-1
		LM109H	3384-21
		LM109K	3384-62
	SGS	M109	3320-139
			(Continued)
109	SiliconG	SG109K	3384-70
		SG109T	3384-26
10900			
	Motorola	MC10900	845-35
			1449-107
10901	Motorola	MC10901	845-34
10902	Motorola	MC10902	845-36
			1411-18
10904	Motorola	MC10904	848-10
			1449-108
10905	Motorola	MC10905	848-9
1093	Telefunken	TDA1093	3322-42
			¶ 415-5
10937	Rockwell	10937	2877-91
			¶ 371-4
			1466-73
10938	Rockwell	10938	2876-110
			¶ 397-3
10939	Rockwell	10939	2874-21
			¶ 371-4
			¶ 397-3
1094	Telefunken	TDA1094	3321-130
10941	Rockwell	10941	2874-22
10951	Rockwell	10951	¶ 371-4
10957	Rockwell	10957	¶ 371-4
1096	Telefunken	U1096B	2877-72
			¶ 397-5
1099	**Signetics**	**SAA1099**	★ **3701**
			★ **3728**
			3321-1
10C20	Western	WD10C20	1468-102
10C23	LogicDev	L10C23	843-9
10G000	**GigaBit**	**10G000**	★ **1063**
			851-11
10G011	**GigaBit**	**10G011**	★ **1063**
			851-1
10G012	**GigaBit**	**10G012**	★ **1063**
			851-7
10G021	**GigaBit**	**10G021**	★ **1063**
			851-8
10G040	**GigaBit**	**10G040**	★ **1064**
			851-14
10G041	**GigaBit**	**10G041**	★ **1064**
			851-15
10G060	**GigaBit**	**10G060**	★ **1064**
			851-6
10G065	**GigaBit**	**10G065**	★ **1064**
			851-2
10G070	**GigaBit**	**10G070**	★ **1064**
			851-4
10H016	**MMI**	**MC10H016**	★ **1105**
			845-47
	Motorola	**MC10H016**	★ **1127**
			845-52
10H100	**MMI**	**MC10H100**	★ **1105**
			846-68
	Motorola	**MC10H100**	★ **1123**
			846-71
10H101	**MMI**	**MC10H101**	★ **1105**
			846-94
	Motorola	**MC10H101**	★ **1123**
			846-97
10H102	**MMI**	**MC10H102**	★ **1105**
			846-61
	Motorola	**MC10H102**	★ **1122**
			846-64
10H103	**MMI**	**MC10H103**	★ **1105**
			846-27
	Motorola	**MC10H103**	★ **1122**
			846-30
10H104	**MMI**	**MC10H104**	★ **1105**
			846-6
	Motorola	**MC10H104**	★ **1122**
			846-9
10H105	**MMI**	**MC10H105**	★ **1105**
			846-85
			(Continued)
10H105	**Motorola**	**MC10H105**	★ **1123**
			846-88
10H106	**MMI**	**MC10H106**	★ **1105**
			846-53
	Motorola	**MC10H106**	★ **1123**
			846-56
10H107	**MMI**	**MC10H107**	★ **1105**
			846-140
	Motorola	**MC10H107**	★ **1123**
			846-143
10H109	**MMI**	**MC10H109**	★ **1105**
			846-77
	Motorola	**MC10H109**	★ **1123**
			846-80
10H113	**Motorola**	**MC10H113**	★ **1123**
			846-135
10H115	**MMI**	**MC10H115**	★ **1105**
			848-37
	Motorola	**MC10H115**	★ **1131**
			848-40
10H116	**MMI**	**MC10H116**	★ **1105**
			848-19
	Motorola	**MC10H116**	★ **1131**
			848-26
10H117	**MMI**	**MC10H117**	★ **1105**
			846-118
	Motorola	**MC10H117**	★ **1123**
			846-121
10H118	**MMI**	**MC10H118**	★ **1105**
			846-102
	Motorola	**MC10H118**	★ **1123**
			846-105
10H119	MMI	MC10H119	846-110
	Motorola	**MC10H119**	★ **1123**
			846-113
10H121	**MMI**	**MC10H121**	★ **1105**
			846-126
	Motorola	**MC10H121**	★ **1123**
			846-129
10H123	**Motorola**	**MC10H123**	★ **1125**
			845-104
10H124	**MMI**	**MC10H124**	★ **1105**
			847-150
	Motorola	**MC10H124**	★ **1124**
			847-153
10H125	**MMI**	**MC10H125**	★ **1105**
			847-141
	Motorola	**MC10H125**	★ **1124**
			847-144
10H130	**MMI**	**MC10H130**	★ **1105**
			847-1
	Motorola	**MC10H130**	★ **1126**
			847-4
10H131	**MMI**	**MC10H131**	★ **1105**
			845-116
	Motorola	**MC10H131**	★ **1126**
			845-121
10H135	**Motorola**	**MC10H135**	★ **1126**
			845-140
10H136	**MMI**	**MC10H136**	★ **1105**
			845-56
	Motorola	**MC10H136**	★ **1127**
			845-59
10H141	**MMI**	**MC10H141**	★ **1105**
			847-127
	Motorola	**MC10H141**	★ **1128**
			847-130
10H145	**MMI**	**MC10H145**	★ **1105**
			847-51
	Motorola	**MC10H145**	★ **1128**
			★ **4123**
			847-52
			★ **1128**
			★ **4123**
			3831-6
10H155	Motorola	MC10H155	847-39
10H158	**MMI**	**MC10H158**	★ **1105**
			847-110
	Motorola	**MC10H158**	★ **1129**
			847-113
10H159	**MMI**	**MC10H159**	★ **1105**
			847-103
	Motorola	**MC10H159**	★ **1129**
			847-106
10H160	**MMI**	**MC10H160**	★ **1105**
			848-54
			(Continued)

Arranged alphanumerically from left to right.

Base Number	Source	Device	Page-Line
10H160	**Motorola**	**MC10H160**	★ **1132** 848-57
10H161	**MMI**	**MC10H161**	★ **1105** 845-82
	Motorola	**MC10H161**	★ **1130** 845-85
10H162	**MMI**	**MC10H162**	★ **1105** 845-73
	Motorola	DG10H162	845-74
		MC10H162	★ **1130** 845-77
10H164	**MMI**	**MC10H164**	★ **1105** 847-118
	Motorola	**MC10H164**	★ **1129** 847-121
10H165	**Motorola**	**MC10H165**	★ **1131** 848-47
10H166	**MMI**	**MC10H166**	★ **1105** 845-30
	Motorola	**MC10H166**	★ **1132** 845-33
10H171	**Motorola**	**MC10H171**	★ **1130** 845-97
10H172	**Motorola**	**MC10H172**	★ **1130** 845-91
10H173	**MMI**	**MC10H173**	★ **1105** 847-34
	Motorola	**MC10H173**	★ **1129** 847-36
10H174	**MMI**	**MC10H174**	★ **1105** 847-96
	Motorola	**MC10H174**	★ **1129** 847-99
10H175	**MMI**	**MC10H175**	★ **1105** 846-148
	Motorola	**MC10H175**	★ **1126** 846-151
10H176	**MMI**	**MC10H176**	★ **1105** 845-126
	Motorola	**MC10H176**	★ **1126** 845-129
10H179	**Motorola**	**MC10H179**	★ **1132** 845-7
10H180	**Motorola**	**MC10H180**	★ **1132** 845-14
10H181	**Motorola**	**MC10H181**	★ **1132** 845-27
10H186	**Motorola**	**MC10H186**	★ **1126** 845-135
10H188	**Motorola**	**MC10H188**	★ **1124** 845-38
10H189	**Motorola**	**MC10H189**	★ **1124** 845-41
10H209	**Motorola**	**MC10H209**	★ **1123** 849-106
10H210	**MMI**	**MC10H210**	★ **1105** 846-19
	Motorola	**MC10H210**	★ **1122** 846-23
10H211	**MMI**	**MC10H211**	★ **1105** 846-38
	Motorola	**MC10H211**	★ **1123** 846-42
10H330	**Motorola**	**MC10H330**	★ **1125** 848-32
10H332	**Motorola**	**MC10H332**	★ **1125** 848-11
10H334	**Motorola**	**MC10H334**	★ **1125** 848-31
10H350	**Motorola**	**MC10H350**	★ **1124** 847-137
10H423	**Motorola**	**MC10H423**	★ **1125** 845-100
10H424	**Motorola**	**MC10H424**	★ **1124** 847-146
10H8	Lattice	RAL10H8-15	4467-30
		RAL10H8-15L	4467-31
		RAL10H8-25	4467-118
		RAL10H8-25L	4467-119
		RAL10H8-35	4468-80
		RAL10H8-35L	4468-81
	MMI	HAL10H8-2C	4476-9
		HAL10H8-2M	4476-22
		HAL10H8C	4475-37
		HAL10H8M	4475-117
		PAL10H8-2C	★ **689** ★ **4681** 4472-100
		PAL10H8-2M	★ **689** ★ **4681** 4473-5
		PAL10H8C	★ **689** ★ **4681** 4471-50
		PAL10H8M	★ **689** ★ **4681** 4472-42
		ZHAL10H8C	4475-54
	National	PAL10H8AC	4470-36
		PAL10H8AM	4471-5
		PAL10H8C	4471-78
		PAL10H8M	4472-59
	Zytrex	ZX-CAL10H8	4475-85
10HPAL20P8	**MMI**	**10HPAL20P8C**	★ **4682** ★ **4711** 4469-50
10L20EV8	AMD	AMPAL10L20EV8	4469-54
10L8	Lattice	RAL10L8-15	4467-32
		RAL10L8-15L	4467-33
		RAL10L8-25	4467-120
		RAL10L8-25L	4467-121
		RAL10L8-35	4468-82
		RAL10L8-35L	4468-83
	MMI	HAL10L8-2C	4476-10
		HAL10L8-2M	4476-23
		HAL10L8C	4475-38
		HAL10L8M	4475-118
		PAL10L8-2C	★ **689** ★ **4681** 4472-101
		PAL10L8-2M	★ **689** ★ **4681** 4473-6
		PAL10L8C	★ **689** ★ **4681** 4471-51
		PAL10L8M	★ **689** ★ **4681** 4472-43
		ZHAL10L8C	4475-55
	National	PAL10L8AC	4470-37
		PAL10L8AM	4471-6
		PAL10L8C	4471-79
		PAL10L8M	4472-60
	Zytrex	ZX-CAL10L8	4475-86
10P4	MMI	PLE10P4C	4474-20
		PLE10P4M	4474-21
10P8	Lattice	RAL10P8-15	4467-34
		RAL10P8-15L	4467-35
		RAL10P8-25	4467-122
		RAL10P8-25L	4467-123
		RAL10P8-35	4468-84
		RAL10P8-35L	4468-85
	MMI	PLE10P8C	4474-22
		PLE10P8M	4474-23
		ZHAL10P8C	4475-56
	Panatech	**10P8**	★ **4736** 4473-33
		10P8AP-55	★ **4736** 4472-90
		10P8BP-35	★ **4736** 4471-91
	VTI	**VP10P8**	★ **4807** 4474-39
10R20EV8	AMD	AMPAL10R20EV8	4469-55
10R8	MMI	PLE10R8C	4474-24
		PLE10R8M	4474-25
10V24	**Dense-Pac**	**DPD10V24**	★ **4008** 3828-55
10Z416	Fairchild	F10Z416	847-43 3814-71
		F10Z416A	3814-64
11	**Apex**	**PA11**	★ **3525** 3348-38 3360-54 3330-54 3331-95
11	Apex	PA11	3357-53
	Astraea	AC-V11	2029-5
	Basicon	MC-11	2005-23
	Burr-Brown	**MP11**	★ **3148** 2856-3 ¶ 377-11 ¶ 381-16 1469-58
		OPA11HT	3352-48
		UAF11	★ **3152** 3398-13
		UAF11H	★ **3152** 3398-14
	DDC	DAC-SL-11	2867-34
		DAC-U11-1	2871-18
		DDAC-11	2870-25
		SDAC-11	2870-21
	DEC	DCJ11-AA	1437-32
		DCT11-AA	1464-80 ¶ 367-1 ¶ 367-4 1437-37
		KXT11-AB	2025-30
		KXT11-C	2025-31
		LSI-11/23	2023-24
		LSI-11/73	2025-29
		T11	¶ 364-16 ¶ 367-13
	Harris	**HMK11MSI**	★ **1068**
		HMK11SSI	★ **1068** ★ **1077**
	Intel	INTELLEC11-MODEL245	1815-11
	Logicraft	HCP-11	2029-22
		QCP-11	2015-11
		QCP-11+	2029-21
		UCP-11	2021-19
	MicroPwr	**MPOP-11**	★ **688** ★ **3607** 3369-42
		MPOP-11A	★ **688** ★ **3607** 3369-43
		MPOP-11B	★ **688** ★ **3607** 3370-29
		MPOP-11E	★ **688** ★ **3607** 3369-44
		MPOP-11F	★ **688** ★ **3607** 3370-30
	Motorola	**LM11**	★ **3616** 3340-66
		LM11C	★ **3616** 3343-29
		LM11L	★ **3616** 3352-21
	National	LM11	3341-58 3340-67 ¶ 405-16
		LM11A	3338-55
		LM11AC	3340-4
		LM11C	3341-59 3343-30
		LM11CL	3352-20
	Octagon	SYS-11	2021-41
	PMI	**OP-11A**	★ **3636** ★ **3639** 3370-2
		OP-11B	★ **3636** ★ **3639** 3370-33
		OP-11C	★ **3636** ★ **3639** 3372-3
		OP-11E	★ **3636** ★ **3639** 3370-3
		OP-11F	★ **3636** ★ **3639** 3370-34
		OP-11G	★ **3636** ★ **3639** 3372-4
		SMP11A	★ **3639**
11	PMI	SMP11A	3404-67
		SMP11B	★ **3639** 3404-68
		SMP11E	★ **3639** 3404-69
		SMP11F	★ **3639** 3404-70
		SMP11G	★ **3639** 3404-71
	Solarcom	SCMT-11	2015-8
		SCMT-11-C	2013-37
	Supertex	ED-11	¶ 400-1
		ED11	838-6 ¶ 399-16
		HV11	2830-102
	TeledyneC	CDA11	2826-76
		CDA11-S12	2826-75
	TI	XDS-11	1821-18
	Wintek	**MCI11**	★ **2118** 2037-39
	Zilog	Model 11	1823-1
110	AnalogSys	MU110	3399-82
	Brooktree	BT110	2855-20
	Burr-Brown	FOR110	¶ 395-12
		FOT110	¶ 395-12 ¶ 396-16
		XTR110	★ **3151** 3405-125
	Motorola	**MVME110**	★ **2109** 2027-20
	National	LM110	3329-29
	SGS	M110	3320-149
	Sharp	SM110	1450-73 1411-24
	Siliconix	LD110	¶ 390-2 ¶ 390-18 ¶ 421-5
		LD110C	★ **3249** 2848-48
		SM110	¶ 419-6
1100	Cherry	CS1100	4462-20
	Fujitsu	**B1100**	★ **4625** 4444-35
	Lambda	LAS1100	3394-24
	Samsung	**SA1100**	★ **4746**
	Signetics	SCC1100M	4455-15
	Solarise	CK1100A	3375-10 3401-19
	SMC	HDC1100-01	1469-20
		HDC1100-03	1468-90
		HDC1100-04	2879-16 1468-98
		HDC1100-05	1468-114
		HDC1100-12	1468-105
	TI	SE1100C	1451-83
		TMS1100	1451-78 1413-25
	Western	WD1100	1468-96
		WD1100-13	1468-85
		WD1100-21	1468-91
11002	Sierra	SC11002	3380-14 1462-69
11003	Sierra	SC11003	3380-15 1462-70
1101	**Hughes**	**HSGA1101**	★ **683** 4447-25
11011	**Harris**	**HMD11011-2**	★ **1068** 851-5
11016	**Harris**	**HMD11016**	★ **1068** ★ **1069**
1102	**AD**	**ADSP-1102**	★ **1007**
	Hughes	**HSGA1102**	★ **683** 4447-28
	ThomsonCSF	TDA1102	3318-143
	Toko	TK11020	3324-17
1103	**AD**	**ADSP-1103**	★ **1007**
	Hughes	**HSGA1103**	★ **683** 4447-29
	Intel	1103	¶ 439-12
	ITT	UAA1103	3323-113
1104	Burr-Brown	MP1104	2037-48

(Continued)

¶ Indicates page number in Application Note Directory.
★ Indicates additional data is provided on the page noted.

Base Number	Source	Device	Page-Line
1105	**Hughes**	**HSGA1105**	**★ 683**
			4447-32
1107	**Hughes**	**HSGA1107**	**★ 683**
			4447-35
1108	Sharp	LZ1108AD	3309-40
1109	**Hughes**	**HSGA1109**	**★ 683**
			4447-38
111	AD	AD111	3312-40
	Burr-Brown	**OPA111A**	**★3149**
			3340-92
		OPA111B	**★3149**
			3335-3
		OPA111S	**★3149**
			3340-91
	Fairchild	CCD111	3400-11
			3400-50
		μA111M	3312-42
	LinearTech	LM111	3312-39
		LT111A	3312-19
	Motorola	**LM111**	**★3631**
			3312-43
	National	LF111	3312-57
		LM111	3312-45
	Raytheon	LM111	3312-47
	Sharp	SM111	1450-65
			1411-25
	Signetics	**LM111**	**★3725**
			3312-48
	SiliconG	SG111	3312-50
	Siliconix	DGM111A	2823-36
			2823-37
		DGM111B	2823-38
			2823-39
		LD111	¶ 390-2
			¶ 421-5
		LD111A	¶ 390-18
		LD111AC	**★3249**
			2848-49
	Telefunken	U111	3398-6
		U111B	¶ 424-10
	TI	**LM111**	**★ 719**
	ThomsonCSF	LM111	3312-52
1110	**AD**	**ADSP-1110**	**★1006**
			843-92
		ADSP-1110A	**★1006**
		ADSP-1110AJ	**★1006**
			808-5
		ADSP-1110AK	**★1006**
			808-6
		ADSP-1110AS	**★1006**
			808-7
		ADSP-1110AT	**★1006**
			808-8
11100	**Harris**	**HMD11100**	**★4660**
			4446-43
11101	**Harris**	**HMD11101-2**	**★1068**
			★1077
			851-12
11104	**Harris**	**HMD11104-2**	**★1068**
			★1077
			851-10
1111	National	LM1111	3316-162
	Sanyo	LA1111	3321-139
	ThomsonCSF	TDA1111	3318-144
11113	**Harris**	**HMD11113-2**	**★1068**
			★1077
			851-13
1112	S-MOS	SMC1112	1411-17
11131	**Harris**	**HMD11131-2**	**★1068**
			★1077
			851-9
1114	Solarise	CK1114A	3375-11
			3401-20
1115	**Hughes**	**HSGA1115**	**★ 683**
			4447-39
1116	Sharp	LZ1116AM	3309-70
112	AnalogSys	MA112	3330-139
	Davidge	DPC-112B	2021-24
	Fairchild	CCD112	3400-12
			3400-51
	Microlog	FG-112	2021-18
	National	LM112	3333-26
			3346-47
	SGS	M112	3320-151
	TRW-LSI	MPY112	843-59
		MPY112K	855-158
1120	**Hughes**	**HSGA1120**	**★ 683**
			4447-40
	LogicalDes	VME-1120D	2029-4
11200			
	Samsung	**KG11200**	**★4746**
			4454-33
11201	National	LF11201	2824-107
11202	National	LF11202	2824-108
	Sierra	SC11202	3380-118
11203	Sierra	SC11203	3380-119
11204	Sierra	SC11204	3380-120
1121	ITT	SAA1121	3326-117
	Motorola	MHW1121	3324-75
	National	LM1121A	3316-163
		LM1121B	3316-164
		LM1121C	3316-165
11219	Hitachi	HA11219	3322-83
1121UY221			
	Motorola	**SYS1121UY221**	
			★2113
1121VY221			
	Motorola	**SYS1121VY221**	
			★2113
1122	Signetics	PCA1122	3320-131
11225	Hitachi	HA11225	3321-150
1123	Chrislin	CI-1123+	2038-3
11235	Hitachi	HA11235	3325-101
1124	**Dense-Pac**	**DPE1124**	**★4008**
			3813-105
			3813-109
		DPS1124	**★4008**
			3847-89
			3847-105
	SGS	M1124	3323-55
11247	Hitachi	HA11247	3324-122
1125	**Dense-Pac**	**DPS1125**	**★4008**
			3847-90
			3847-106
	Hitachi	HA1125	3326-33
1127	Hitachi	HA1127	3309-9
	Motorola	MHW1127	3324-76
1128	MicronTech	MT1128	3828-56
			3828-57
			3828-61
113	AD	LM113	¶ 427-14
	National	LM113	3401-147
		LM113-1	3401-148
		LM113-2	3401-149
	Telefunken	U113B	¶ 420-11
1130	Sanyo	LA1130	3321-56
11300			
	National	LF11300	¶ 421-6
11301	**Harris**	**HMD11301-2**	**★1068**
			★1077
			851-3
	PMI	**JM11301**	**★3640**
11302	**PMI**	**JM11302**	**★3640**
1131	National	LM1131A	3316-166
		LM1131B	3316-167
		LM1131C	3316-168
1131UY221			
	Motorola	**SYS1131UY221**	
			★2113
1131VY221			
	Motorola	**SYS1131VY221**	
			★2113
1132	**Hughes**	**HSGA1132**	**★ 683**
			4447-41
	Sharp	LZ1132AM	3309-72
11331	National	LF11331	2824-109
11332	National	LF11332	2824-110
11333	National	LF11333	2824-111
114	Burr-Brown	FOT114	¶ 412-4
	Fairchild	SSI114	1469-9
	Microlog	FG-114	2007-33
	Sharp	SM114	1450-66
			1411-26
	SiliconSys	**SSI114**	**★3736**
			1468-86
			1468-110
	Siliconix	LD114	¶ 390-18
	VTC	VM114	1468-113
1140	**Hughes**	**HSGA1140**	**★ 683**
			4447-42
	Sanyo	LA1140	3322-23
11401	**PMI**	**JM11401**	**★3640**
	Sierra	SC11401	2854-19
11402	Sierra	SC11402	2854-20
11403	Sierra	SC11403	2854-21
11404	Sierra	SC11404	2854-22
11406	**PMI**	**JM11406**	**★3640**
11423	Hitachi	HA11423	3326-102
1143	ContLogic	CCS-1143A	2013-8
11431	Hitachi	HA11431NT	3324-123
11436	Hitachi	HA11436A	3324-124
1144	Solarise	CK1144A	3375-12
			3401-21
11440	Hitachi	HA11440A	3327-6
11441	Hitachi	HA11441	3325-102
1145	Solarise	CK1145A	3375-13
			3401-22
1146	ThomsonCSF	TDB1146	3394-45
11461	Hitachi	HA11461	3325-103
11465	Hitachi	HA11465	3327-99
11466	Hitachi	HA11466	3327-7
			3327-122
1147	TRW-LSI	TDC1147	844-4
			2833-6
11477	Hitachi	HA11477NT	3327-101
11478	Hitachi	HA11478	3327-110
11480	Hitachi	HA11480	3324-125
	MicroPwr	$11480	4491-12
11485	Hitachi	HA11485ANT	3326-30
11489	Hitachi	HA11489	3325-69
115	Intersil	G115A	2828-84
		G115B	2828-85
	ITT	SAY115	3319-139
	Microlog	FG-115	2042-48
			2042-49
	Motorola	MVME115M	2027-25
	SiliconSys	**SSI115**	**★3736**
			1468-111
1150	Sanyo	LA1150	3322-24
11500	GESemi	IGC11500	4445-22
	Intersil	IGD11500	4445-17
11502	**Harris**	**HMD11502-2**	**★1068**
			851-23
11508	National	LF11508	2830-182
11509	National	LF11509	2830-76
1151	SGS	TDA1151	2895-135
1152	**Dense-Pac**	**DPS1152**	**★4008**
			3847-82
			3847-91
			3848-1
11520	DDC	DSC-11520	3399-70
		DSC11520	844-112
1154	ThomsonCSF	TDA1154	2896-13
1158H2	NEC	μPC1158H2	3319-13
116	AnalogSys	MC-116	¶ 429-3
		MC116	3383-30
	Fairchild	SSI116	1469-10
	Intersil	G116A	2828-82
		G116B	2828-83
	SiliconSys	**SSI116**	**★3736**
			1468-89
	VTC	VM116	1469-24
1160	Sanyo	LA1160	3322-71
11600			
	Samsung	**KG11600**	**★4746**
			4454-34
1164	**Signetics**	**SAB1164**	**★3731**
			891-26
			3375-96
	Weitek	WTL1164	844-50
			1469-64
		WTL1164A	854-20
			1469-65
1165	**Signetics**	**SAB1165**	**★3731**
			891-27
	Weitek	WTL1165	844-51
			1469-66
		WTL1165A	854-21
			1469-67
11685	**Harris**	**HMD11685-2**	**★1068**
			★1077
			851-22
117	Cherry	CS117	1469-33
	Fairchild	SSI117-2	1469-11
		SSI117-4	1469-12
		SSI117-5	1469-13
		SSI117-6	1469-14
		SSI117-8	1469-15
		μA117M	3393-77
	Hitachi	HA117	3327-117
	IPS	**IP117**	**★3599**
			3393-80
		IP117A	**★3599**
			3393-81
		IP117AHV	**★3599**
			3394-33
		IP117HV	**★3599**
			3394-34
	LinearTech	LM117	3393-87
		LM117AHV	3394-39
		LM117HV	3394-29
		LT117A	3393-89
		LT117AHV	3394-41
	MCE	MCELM117	3393-91
	Microlog	FG-117	2007-34
	Motorola	**LM117**	**★3625**
			3393-94
		LM117L	**★3625**
			3393-68
		LM117M	**★3625**
			3394-1
		MVME117	**★2109**

(Continued)

Arranged alphanumerically from left to right.

PART NUMBER INDEX

Base Number	Source	Device	Page-Line
117	National	LM117	3393-97
			¶ 428-1
		LM117HV	3394-42
	SGS	LM117	3393-100
	SiliconG	SG117	3393-72
			3393-103
		SG117A	3393-104
		SG117HV	3394-43
	SiliconSys	**SSI117**	★**3736**
			1469-35
	ThomsonCSF	LM117	3393-109
	Unitrode	UC117	3393-111
	VTC	VM117	1469-16
1170	SGS	TDA1170	3326-135
		TDA1170D	3326-136
		TDA1170N	3326-137
	Sprague	TDA1170	3326-156
	Telefunken	TDA1170	3326-158
	TI	TMS1170	1413-26
	ThomsonCSF	TDA1170	3326-161
11700			
	National	LM11700A	3362-25
11703	Hitachi	HA11703	3324-42
1171	Motorola	MHW1171	3324-77
	Signetics	PCF1171	3319-116
			3320-79
1172	Motorola	MHW1172	3324-78
	Signetics	PCF1172	3319-117
			3320-80
	STI	ST-1172	3375-32
	VTC	**VM1172**	★**3270**
			1468-119
11720	Hitachi	HA11720	3320-39
1173	Chrislin	CI-1173	2038-2
		CI-1173-EDC	2038-1
	SiliconG	SG1173	3330-60
1174	**VTC**	**VM1174**	★**3270**
			1468-123
1176	NEC	μPC1176C	3322-84
	VTC	**VM1176**	★**3270**
			1469-1
11767	Hitachi	HA11767AMP	3327-119
11774	Hitachi	HA11774MP	3327-118
11776	Hitachi	HA11776AMP	3327-120
11777	Hitachi	HA11777MP	3327-116
1178	VTC	VM1178	1469-5
118	AnalogSys	MS118	3404-99
	Harris	LM118	3350-23
	Intersil	**DG118**	★**3196**
			2824-91
		G118A	2828-86
		G118B	2828-87
	LinearTech	LM118	3350-24
	National	LM118	3350-25
	Siliconix	**G118A**	★**3226**
			2828-88
	ThomsonCSF	LM118	3350-27
	VTC	VM118	1469-17
1180	SGS	TDA1180	3325-130
1182	Motorola	MHW1182	3324-79
	VTC	**VM1182**	★**3270**
			1468-120
1184	**VTC**	**VM1184**	★**3270**
			1468-124
1185	Motorola	TDA1185	3405-15
	NEC	μPC1185HC	3318-153
1186	**VTC**	**VM1186**	★**3270**
			1469-2
1188	NEC	μPC1188H	3318-101
119	Intersil	G119A	2828-91
		G119B	2828-92
	LinearTech	LM119	3314-14
		LT119A	3313-35
	Microlog	FG-119	2007-36
	National	LM119	3314-13
			3314-15
	Signetics	**LM119**	★**3723**
			3314-17
	Siliconix	**G119A**	★**3226**
			2828-93
		G119B	★**3226**
			2828-94
	ThomsonCSF	LM119	3314-19
1190	**Motorola**	**TDA1190**	★**3612**
			★**3613**
			3326-38
		TDA1190P	★**3612**
			★**3613**
			3326-40
	RCA	CA1190	3326-47
	SGS	TDA1190	3326-57
	Sprague	TDA1190Z	3326-69
11902	Motorola	TDA11902	3326-39
1191	RCA	CA1191	3326-48
1196	Hitachi	HA1196	3322-108
1197	Hitachi	HA1197	3321-25
	NEC	μPC1197	3322-117
1199	Hitachi	HA1199	3321-26
11C01	Fairchild	11C01C	849-105
11C05	Fairchild	11C05C	849-78
		11C05M	849-79
11C06	Fairchild	11C06C	849-96
		11C06M	849-97
11C70	Fairchild	11C70C	849-93
11C90	Fairchild	11C90C	849-87
			3376-67
		11C90M	849-88
			3376-68
11C91	Fairchild	11C91C	849-85
			3376-56
		11C91M	849-86
			3376-57
11P4	MMI	PLE11P4C	4474-26
		PLE11P4M	4474-27
11P8	MMI	PLE11P8C	4474-28
		PLE11P8M	4474-29
11RA8	MMI	PLE11RA8C	4474-30
		PLE11RA8M	4474-31
11RS8	MMI	PLE11RS8C	4474-32
		PLE11RS8M	4474-33
12	**Apex**	**PA12**	★**3525**
			3348-26
			3360-31
			3330-42
			3331-72
			3355-7
			¶ 419-1
		PA12A	★**3525**
			3348-24
			3360-29
			3330-40
			3331-70
			3346-211
		PA12H	★**3525**
			3355-5
		PA12M	★**3525**
			3348-27
			3330-43
			3355-8
	Astraea	AC-V12	2029-6
	Burr-Brown	OPA12HT	3357-71
		VFC12	★**3148**
	Cromemco	ADC12	2038-16
			(Continued)
12	Cromemco	DAC12	2038-17
	DDC	DAC-SL-12	2865-33
		DAC-U12-1	2871-15
		DDAC-12	2870-24
		SDAC-12	2870-19
	Datel	**ADC-EK12B**	★**3161**
			2843-3
		ADC-EK12DC	★**3161**
			2846-13
		ADC-ET12BC	★**3160**
			2845-37
		ADC-HC12BMC	★**3160**
			★**3161**
			2842-55
		ADC-HC12BMM	★**3160**
			★**3161**
			2842-56
		ADC-HS12BMC	★**3160**
			★**3161**
			2840-16
		ADC-HS12BMM	★**3160**
			★**3161**
			2840-17
		ADC-HX12BGC	★**3160**
			★**3161**
			2841-33
		ADC-HX12BMM	★**3160**
			★**3161**
			2841-34
		ADC-HZ12BGC	★**3160**
			★**3161**
			2840-14
		ADC-HZ12BMM	★**3160**
			★**3161**
			2840-15
		DAC-HA12BC	★**3160**
			★**3162**
			2862-52
		DAC-HA12BC-1	★**3160**
			★**3162**
			2862-54
		DAC-HA12BM	★**3160**
			★**3162**
			2862-53
		DAC-HA12BM-1	★**3160**
			★**3162**
			2862-55
		DAC-HA12DC	★**3160**
			★**3162**
			2870-6
		DAC-HA12DC-1	★**3160**
			★**3162**
			2870-4
		DAC-HA12DM	★**3160**
			★**3162**
			2870-7
		DAC-HA12DM-1	★**3160**
			★**3162**
			2870-5
		DAC-HF12BMC	★**3160**
			★**3162**
			2861-37
		DAC-HF12BMM	★**3160**
			★**3162**
			2861-38
		DAC-HK12BGC	★**3160**
			★**3162**
			2864-43
		DAC-HK12BGC-2	
			★**3160**
			★**3162**
			2864-44
		DAC-HK12BMM	★**3160**
			★**3162**
			2864-45
		DAC-HK12BMM-2	
			★**3160**
			★**3162**
			2864-46
		DAC-HK12DGC	★**3160**
			★**3162**
			2869-46
		DAC-HK12DMM	★**3160**
			★**3162**
			2869-47
		DAC-HZ12BGC	★**3160**
			(Continued)
12	**Datel**	**DAC-HZ12BGC**	★**3162**
			2865-4
		DAC-HZ12BMM	★**3160**
			★**3162**
			2865-5
		DAC-HZ12DGC	★**3160**
			★**3162**
			2869-48
		DAC-HZ12DMC	★**3160**
			★**3162**
			2869-49
		DAC-HZ12DMM	★**3160**
			★**3162**
			2869-50
	Datricon	ACS-12	2017-35
	Intech	DAC-HK12BGC	2864-47
		DAC-HK12BMM	2864-48
	Intel	iBCK12	2046-26
	Intelicom	ADC12	2039-55
	Interdesign	ULA12C	4444-5
			4444-7
		ULA12N	4444-8
			4444-11
		ULA12RA	4443-21
		ULA12RB	4443-22
		ULA12RC	4443-23
		ULA12RD	4443-24
	ICC	LP-12	2023-18
		LP-12P	2023-17
	IMI	MPV-12	843-54
		MPY-12	843-55
		MPY-12IMI	807-126
	LogicDev	LMU12	843-56
		LMU12C	807-94
		LMU12M	807-125
	MicroPwr	**MPOP-12A**	★ **688**
			★**3607**
			3357-209
		MPOP-12B	★ **688**
			★**3607**
			3361-14
		MPOP-12C	★ **688**
			★**3607**
			3357-201
		MPOP-12E	★ **688**
			★**3607**
			3357-210
		MPOP-12F	★ **688**
			★**3607**
			3361-15
		MPOP-12G	★ **688**
			★**3607**
			3357-202
	PMI	**OP-12**	★**3636**
			3347-8
		OP-12A	★**3636**
			3340-5
		OP-12B	★**3636**
			3340-68
		OP-12C	★**3636**
			3344-48
		OP-12E	★**3636**
			3340-6
		OP-12F	★**3636**
			3340-69
		OP-12G	★**3636**
			3344-49
	SiliconSys	**SCA-12**	★**4751**
			4465-2
			3404-113
	Supertex	VF12	2896-39
	Toshiba	TLCS-12A	1433-31
	WinSystems	LPM-A/D12	2041-33
		MCM-A/D12	2039-42
			2041-32
120	AnalogSys	MS120	3404-96
	IPS	**IP120-12**	★**3599**
			3391-39
		IP120-15	★**3599**
			3391-105
		IP120-5	★**3599**
			3390-32
		IP120A-12	★**3599**
			3391-40
		IP120A-15	★**3599**
			3391-106
			(Continued)

¶ Indicates page number in Application Note Directory.
★ Indicates additional data is provided on the page noted.

Base Number	Source	Device	Page-Line
120	**IPS**	**IP120A-5**	★ **3599**
			3390-33
	Intersil	**DG120**	★ **3196**
		IT120	3309-106
		IT120A	3309-107
	Motorola	**MVME120**	★ **2109**
		TBA120	★ **3613**
			3326-37
	National	LM120	¶ 428-1
		TBA120S	3326-42
	Raytheon	**RLA120**	★ **3668**
			★ **4741**
			4464-42
	SGS	L120	3404-88
			¶ 424-8
		M120	3834-5
			¶ 441-4
	Sharp	SM120	1411-27
	Siemens	TBA120	3322-30
	Signetics	**TBA120U**	★ **3731**
			3322-37
			3322-105
			3326-63
	SiliconG	SG120-05K	3390-50
		SG120-05P	3390-26
		SG120-05T	3390-20
		SG120-08K	3390-115
		SG120-08R	3390-116
		SG120-08T	3390-107
		SG120-12K	3391-55
		SG120-12P	3391-33
		SG120-12T	3391-16
		SG120-15K	3391-121
		SG120-15R	3391-99
		SG120-15T	3391-80
		SG120-18K	3392-20
		SG120-18R	3392-21
		SG120-18T	3392-10
		SG120-20K	3392-37
		SG120-20R	3392-38
		SG120-20T	3392-32
		SG120-5	3390-77
			3390-70
			3390-67
	Siliconix	LD120	¶ 390-3
			¶ 390-18
			¶ 421-10
		LD120C	★ **3248**
			2848-64
	Telefunken	TBA120	3322-41
			3326-73
1200	Altera	EP1200-1	4473-58
		EP1200-2	4473-59
		EP1200-3	4473-60
	ArrayTech	DHS1200	4439-23
	Burr-Brown	**DAC1200K-V**	★ **3147**
			2869-9
	CalDevices	**CHA1200**	★ **4610**
			4440-29
		DLM1200	★ **4605**
			4440-30
	Calmos	CA1200	4441-12
	Cherry	CS1200	4441-24
	Citel	MA1200	4441-45
	Comark	CBX-S1200	2032-47
	Fairchild	**FGC1200**	★ **4621**
			4442-18
	Fujitsu	**C1200**	★ **4624**
	Galil	GL-1200	3400-99
	Harris	**HSG1200RH**	★ **655**
			4446-37
	Matra	MA1200	4450-32
	Motorola	**MCA1200ECL**	★ **4718**
			4451-39
	National	MCA1200ECL	¶ 443-8
	S-MOS	SED1200	2874-84
	Sahni	LA1200	4454-28
	Samsung	**SA1200**	★ **4746**
	SGS	TDA1200	3322-28
			¶ 415-16
	TI	TMS1200C	1413-27
	VTI	**VGC1200**	★ **4805**
			4458-8
12000	Fujitsu	UH12000	4445-13
			(Continued)
12000	**Samsung**	**KG12000**	★ **4746**
			4454-35
12002	Hitachi	HA12002	3316-190
	Motorola	MC12002	848-3
			3375-29
12009	Motorola	MC12009	890-93
			¶ 423-13
			3376-58
			3376-61
1200A2	Vatic	B1200A2	4457-42
1201	**AD**	**HAS-1201K**	★ **3122**
			2839-34
		HAS-1201S	★ **3122**
			2839-35
	Burr-Brown	**DAC1201K-V**	★ **3147**
			2869-8
	Sanyo	LA1201	3321-78
12010	Hitachi	HA12010	2874-27
12011	Motorola	MC12011	890-100
			¶ 423-13
			3376-64
12013	Motorola	MC12013	890-109
			¶ 423-13
			3376-69
12014	Motorola	MC12014	890-39
			3375-7
12015	Motorola	MC12015	891-12
			3376-77
12016	Hitachi	HA12016	3322-74
	Motorola	MC12016	891-15
			3376-80
12017	Hitachi	HA12017	3319-6
	Motorola	MC12017	891-25
			3376-85
12018	Motorola	MC12018	891-40
			3376-88
12019	Motorola	MC12019	848-42
			3376-76
1202	**AD**	**HAS-1202**	★ **3123**
			2839-46
		HAS-1202A	★ **3123**
			2839-38
		MAS-1202	2838-4
12022	Motorola	MC12022	891-39
			3376-90
12023	Motorola	MC12023	891-29
			3375-84
12026	Hitachi	HA12026	3322-75
12039	Hitachi	HA12039	3319-104
12040			
		MC12040	3375-67
12043	Hitachi	HA12043	3316-152
12044	Hitachi	HA12044	3316-153
12045	Hitachi	HA12045 3317	3316-155
12046	Hitachi	HA12046	3316-156
12047	Hitachi	HA12047	3316-157
12048	Hitachi	HA12048	3316-158
1205	AD	HDH-1205	2863-11
		HDH-1205M	2863-12
	National	ADC1205BC	2845-44
		ADC1205BC-1	2845-45
		ADC1205CC	2845-48
		ADC1205CC-1	2845-49
12051	Hitacni	HA12051	3324-34
12052	Hitachi	HA12052CFP	3324-38
12058	Hitachi	HA12058MP	3316-159
1206	AD	HDD-1206J	2864-30
		HDD-1206S	2864-31
12060	Motorola	MC12060	¶ 423-3
12061	Motorola	MC12061	3375-8
			¶ 423-3
12071	Motorola	MC12071	891-30
			3375-76
			3376-81
12073	Motorola	MC12073	891-28
			3375-83
12074	Motorola	MC12074	891-54
			3375-85
12075	Motorola	MC12075	891-55
			3375-86
1208	**MicroPwr**	**MP1208B**	★ **688**
			★ **3206**
			2867-45
		MP1208K	★ **688**
			★ **3206**
			2867-46
		MP1208T	★ **688**
			★ **3206**
			2867-47
	National	DAC1208	2863-30
12088	Hitachi	HA12088NT	3316-160
1209	MicroPwr	MP1209A	2867-14
		MP1209J	2867-15
		MP1209S	2867-16
	National	DAC1209	2866-41
12090			
	Motorola	MC12090	890-84
			3375-88
12091	Hitachi	HA12091MP	3316-161
120H12	National	LM120H12	3391-14
120H15	National	LM120H15	3391-78
120H5	National	LM120H5	3390-15
120K12	National	LM120K12	3391-27
120K15	National	LM120K15	3391-93
120K5	National	LM120K5	3390-45
121	**Burr-Brown**	**OPA121K**	★ **3149**
			3340-101
	Fairchild	CCD121	3400-57
	Intel	SC121	4467-1
	Intersil	**DG121**	★ **3196**
		IT121	3309-108
	Motorola	**MVME121**	★ **2109**
	National	LM121	3307-85
		LM121A	3307-86
	SGS	L121	3404-84
			¶ 424-8
	Siliconix	L121A	¶ 391-4
		LD121	¶ 421-10
		LD121A	¶ 390-3
			¶ 390-18
		LD121AC	★ **3248**
			2848-65
		LS121A	¶ 390-4
1210	MicroPwr	MP1210H	2868-8
		MP1210R	2868-9
		MP1210Z	2868-10
	National	ADC1210	2843-11
		ADC1210C	2843-12
		DAC1210	2868-38
	Sanyo	LA1210	3321-91
1211	National	ADC1211	2845-40
		ADC1211C	2845-41
1212	NEC	μPC1212	3318-41
1213	NEC	μPC1213	3318-42
1214	Supertex	HV1214	2830-96
12141	**Harris**	**HMD12141**	★ **1068**
			★ **1073**
			3855-23
		HMD12141-1	★ **1068**
			★ **1073**
			851-16
1215	NEC	μPC1215V	3321-29
1216	Burr-Brown	MP1216	2037-44
		MP1216-PGA	2037-45
	NEC	μPC1216	3321-30
	Supertex	HV1216	2830-99
1218	National	DAC1218	2863-31
1219	National	DAC1219	2866-42
122	Cherry	CS122	891-117
			3320-13
			3400-76
	Fairchild	CCD122	3400-13
			3400-58
	Intersil	IT122	3309-109
	Microlog	FG-122	2031-29
			(Continued)
122	Microlog	FG-122	2031-31
	Motorola	**MVME122**	★ **2109**
	National	LM122	3383-10
	SiliconSys	**SSI122**	★ **3736**
			1468-112
	Siliconix	DGM122A	2827-71
		DGM122B	2827-72
		LD122	¶ 390-4
			¶ 390-18
		LD122C	★ **3248**
			2848-66
	VTC	**VM122**	★ **3270**
			1468-118
1220	ITT	SAA1220	3326-118
	National	DAC1220	2868-24
		DAC1220C	2868-25
	SGS	TDA1220A	3321-92
		TDA1220B	3321-93
		TDA1220L	3321-94
1221	Motorola	MHW1221	3324-80
	National	DAC1221	2869-21
		DAC1221C	2869-22
1222	Motorola	MHW1222	3324-81
	National	DAC1222	2869-34
		DAC1222C	2869-35
	NEC	μPC1222	3321-65
	Samsung	KA1222	3319-49
	Sanyo	LA1222	3321-140
1224	**Dense-Pac**	**DPE1224**	★ **4008**
			3813-104
			3813-108
		DPS1224	★ **4008**
			3847-88
			3847-104
1225	AD	RTI-1225	2040-1
	National	ADC1225BC	2845-46
		ADC1225BC-1	2845-47
		ADC1225CC	2845-50
		ADC1225CC-1	2845-51
	NEC	μPC1225	3316-186
1226	AD	RTI	2040-4
1227	NEC	μPC1227	3322-118
123	Fairchild	CCD123	3400-14
			3400-59
		SH123	3385-6
		μA123	3385-9
	IPS	**IP123**	★ **3599**
			3385-12
		IP123-12	★ **3599**
			3387-77
		IP123-15	★ **3599**
			3388-68
		IP123A	★ **3599**
			3385-13
		IP123A-12	★ **3599**
			3387-78
		IP123A-15	★ **3599**
			3388-69
	Intersil	D123A	2829-3
		D123B	2829-4
		DG123	★ **3196**
			2824-119
		DG123B	★ **3196**
			2824-123
	LinearTech	LM123	3385-20
		LM123A	3385-21
	Motorola	**LM123**	★ **3622**
			3385-24
		LM123A	★ **3622**
			3385-25
		MVME123	★ **2109**
	National	LM123	3385-34
			¶ 428-1
	SGS	L123CB	3394-8
		L123CT	3394-9
	SiliconG	SG123	3385-41
			(Continued)

Arranged alphanumerically from left to right.

Base Number	Source	Device	Page-Line
123	SiliconG	SG123A	3385-42
	Siliconix	**DG123A**	★ **3223**
			2824-120
		DG123B	★ **3223**
			2824-124
	Telefunken	U123	3400-89
	ThomsonCSF	LM123	3385-51
1230	AD	RTI-1230	2033-57
	Cermetek	CH1230	3380-61
	MicroPwr	**MP1230B**	★ **688**
			★ **3206**
			2867-48
		MP1230K	★ **688**
			★ **3206**
			2867-49
		MP1230T	★ **688**
			★ **3206**
			2868-1
	National	DAC1230	2863-32
	Sanyo	LA1230	3322-25
1230H2	NEC	µPC1230H2	3318-102
1231	AD	RTI-1231	2034-8
	IntCirSys	ICS1231	3850-32
	MicroPwr	MP1231A	2867-17
		MP1231J	2867-18
		MP1231S	2867-19
	National	DAC1231	2866-43
	Sanyo	LA1231N	3322-26
1232	AD	RTI-1232	2034-5
	MicroPwr	MP1232H	2867-20
		MP1232R	2867-21
		MP1232Z	2867-22
	National	DAC1232	2868-39
1235	ITT	TDA1235	3326-34
	Sanyo	LA1235	3322-60
1236	ITT	TDA1236	3326-35
1238	NEC	µPC1238H/V	3316-204
124	Fairchild	µA124M	3334-143
	Motorola	**LM124**	★ **3618**
			3334-148
	National	LM124	3334-151
		LM124A	3370-8
	Raytheon	LM124	3334-155
	RCA	**CA124**	★ **3672**
			3334-158
	SGS	LM124	3371-39
		LM124A	3370-7
	Signetics	**LM124**	★ **3729**
			3334-161
	SiliconG	SG124	3334-164
		SG124A	3370-9
	TI	**LM124**	★ **719**
			3334-167
	ThomsonCSF	LM124	3371-38
1240	**AD**	**HDS-1240E**	★ **3115**
			2866-3
		HDS-1240EM	2866-4
		RTI-1240	2042-54
	Comark	CMX-D1240	2036-4
	Sanyo	LA1240	3321-57
1241	AD	RTI-1241	2042-55
	NEC	µPC1241H	3316-205
	Samsung	KA1241	3321-59
12411	Hitachi	HA12411	3321-151
12412	Hitachi	HA12412	3319-95
			3321-152
12413	Hitachi	HA12413	3321-82
1242	AD	RT-1242	2042-52
	NEC	µPC1242H	3316-206
12427	Hitachi	HA12427	3321-51
12428	Hitachi	HA12428	3321-52
12429	Hitachi	HA12429	3321-21

Base Number	Source	Device	Page-Line
1243	AD	RTI-1243	2042-53
	NEC	µPC1243	3321-55
12432	Hitachi	HA12432	3321-27
12438	Hitachi	HA12438AFP	3321-121
12440	Hitachi	HA12440	3321-28
12441	Hitachi	HA12441	3379-87
12442	Hitachi	HA12442V	3320-44
1245	NEC	µPC1245	3322-11
	Sanyo	LA1245	3321-58
1248	NEC	µPC1248	3321-31
125	Intersil	D125A	2829-5
		D125B	2829-6
		DG125	★ **3196**
			2824-121
		DG125B	★ **3196**
			2824-125
	National	LM125	3392-85
			¶ 428-1
	Siliconix	D125A	886-145
			2829-7
		D125B	886-146
			2829-8
		DG125A	★ **3223**
			2824-122
		DG125B	★ **3223**
			2824-126
		PWM125A	★ **3260**
			3396-112
		PWM125C	★ **3260**
			3396-113
	TeledyneC	CDR125A	2829-9
1250	AD	HDS-1250	2861-33
		HDS-1250M	2861-34
		RTI-1250	2033-13
	DDC	DDC1250-10-1	2869-4
		DDC1250-10-3	2869-5
		DDC1250-12-1	2865-53
		DDC1250-12-3	2865-54
	ITT	SAA1250	3323-28
12502	Motorola	MC12502	848-4
			3375-30
12509	Motorola	MC12509	890-94
			3376-59
			3376-62
1251	AD	RTI-1251	2033-15
	ITT	SAA1251	3323-29
	Signetics	**PCF1251**	★ **3725**
12511	Motorola	MC12511	890-101
			3376-65
12513	Motorola	MC12513	890-110
			3376-70
1252	AD	RTI-1252	2033-14
1252H2	NEC	µPC1252H2	3319-101
1253	SiliconG	SG1253	3334-60
1253H2	NEC	µPC1253H2	3316-139
12540	Motorola	MC12540	3375-68
1256	Davidge	DPC-1256	2021-25
	Dense-Pac	**DPV1256**	★ **4008**
			3825-19
	MicronTech	MT1256-12	3829-9
		MT1256-15	3829-43
		MT1256-20	3829-66
	Signetics	**SAB1256**	★ **3731**
			891-53
			3375-95
12561	Motorola	MC12561	3375-9
126	**Intersil**	**DG126A**	★ **3196**
			2827-58
	National	LM126	3392-75
			(Continued)

Base Number	Source	Device	Page-Line
126	**Siliconix**	**DG126A**	★ **3223**
			2827-59
		DG126B	★ **3223**
			2827-69
1260	AD	RTI-1260	2040-5
	Sanyo	LB1260	3310-170
1261	Sanyo	LB1261	3310-171
1262	AD	RTI-1262	2040-3
	Cermetek	CH1262	3380-1
1263	Cermetek	CH1263	3379-118
1264	Sanyo	LB1264	3310-172
	Weitek	WTL1264	844-52
			1469-68
		WTL1264A	854-22
			1469-69
1265	National	DAC1265A	2859-85
		DAC1265AC	2859-86
		DAC1265L	2862-9
		DAC1265LC	2862-10
	Weitek	WTL1265	844-53
			1469-70
		WTL1265A	854-23
			1469-71
1266	National	DAC1266A	2859-83
		DAC1266AC	2859-84
		DAC1266L	2862-7
		DAC1266LC	2862-8
1267	Cermetek	CH1267	3380-2
1268	Cermetek	CH1268	3379-119
127	Cherry	CS127	3320-14
			3400-72
	Siliconix	PWM127A	3396-114
		PWM127C	3396-115
1270	AD	RTI-1270	2039-56
	SGS	TDA1270	3326-138
	TI	TMS1270	1451-79
			1413-28
1272	ITT	SAA1272	3323-30
	Sanvo	LB1272	3310-78
1273	Sanyo	LB1273R	3310-79
1274	ITT	SAA1274	3325-76
	Sanyo	LB1274	3310-28
1275	**Fujitsu**	**C1275H**	★ **4624**
			4444-52
		C1275HB	★ **4624**
			4444-53
	Sanyo	LB1275	3310-166
	TI	TAC1275H	4456-15
1276	ITT	SAA1276	3325-77
1277	NEC	µPC1277	3318-186
128	Davidge	DSX-128K	2037-35
	Dense-Pac	**DPS128KU**	★ **4008**
			3845-108
		DPX128KU	★ **4008**
			3845-114
	FujitsuA	FBM-C128GA	2046-29
	GI	SPR128	3851-101
	Intersil	G128	2828-52
	Plessey	PME-128S	2045-53
	Reticon	RL128EC	3400-26
		RL128G	3400-27
		RL128L	3400-28
		RL128S	3400-29
		RL128SF	3400-30
			(Continued)

Base Number	Source	Device	Page-Line
128	Reticon	RL128SFX	3400-46
	WinSystems	MCM-DRAM 128	2041-62
1280	AD	RTI-1280	2039-63
	Cermetek	CH1280	3380-3
	Matrox	PG-1280	2031-14
1281	AD	RTI-1281	2040-2
12816	**Dense-Pac**	**DPV12816**	★ **4008**
			3825-16
1282	AD	RTI-1282	2039-67
12832	**Dense-Pac**	**DPV12832**	★ **4008**
			3825-17
1285	Motorola	TDA1285	2895-68
		TDA1285A	2895-126
	PlesseyMicro	PME 1285	2045-42
1287	AD	RTI-1287	2040-10
	Sanyo	LB1287	2894-51
			3310-72
1288	**Dense-Pac**	**DPV1288**	★ **4008**
			3825-15
	Sanyo	LB1288	2894-52
			3310-73
128X128	Reticon	RA128X128A	3400-2
128X16	Calmos	CA128X16	837-72
128x128	Reticon	RA-128x128	3399-126
128x4	Reticon	CCPD128x4	3400-7
128x8	Reticon	CCPD128x8	3400-8
129	Cherry	CS129	3320-15
			3400-77
	Intersil	D129A	2828-109
		D129B	2828-110
		DG129A	★ **3196**
			2827-38
	LinearTech	LM129	3402-144
	National	LM129	3402-148
			¶ 428-1
	SGS	L129	3384-56
	Siemens	TBA129	3322-31
	Siliconix	D129A	2828-111
		D129B	2828-112
		DG129A	★ **3223**
			2827-39
		DG129B	★ **3223**
			2827-49
1290	Cermetek	CH1290	3398-19
1295	Cermetek	CH1295	3377-14
			3398-20
1296	Cermetek	CH1296	3377-15
			3398-21
12G014	**GigaBit**	**12G014**	★ **1065**
			3832-91
12H10	TI	TIBPAL12H10	4469-32
12H6	Lattice	RAL12H6-15	4467-36
		RAL12H6-15L	4467-37
		RAL12H6-25	4467-124
		RAL12H6-25L	4467-125
		RAL12H6-35	4468-86
		RAL12H6-35L	4468-87
	MMI	HAL12H6-2C	4476-11
		HAL12H6-2M	4476-24
		HAL12H6C	4475-39
		HAL12H6M	4475-119
		PAL12H6-2C	★ **689**
			★ **4681**
			(Continued)

¶ Indicates page number in Application Note Directory.
★ Indicates additional data is provided on the page noted.

Base Number	Source	Device	Page-Line
12H6	MMI	PAL12H6-2C	4472-102
		PAL12H6-2M	★ **689**
			★ **4681**
			4473-7
		PAL12H6C	★ **689**
			★ **4681**
			4471-52
		PAL12H6M	★ **689**
			★ **4681**
			4472-44
		ZHAL12H6C	4475-57
	National	PAL12H6AC	4470-38
		PAL12H6AM	4471-7
		PAL12H6C	4471-80
		PAL12H6M	4472-61
	Zytrex	ZX-CAL12H6	4475-87
12L10	MMI	HAL12L10C	4475-97
		HAL12L10M	4475-120
		PAL12L10C	★ **4682**
			4472-19
		PAL12L10M	★ **4682**
			4472-45
	National	PAL12L10C	4472-32
		PAL12L10M	4472-33
	TI	TIBPAL12L10	4469-33
12L6	Lattice	RAL12L6-15	4467-38
		RAL12L6-15L	4467-39
		RAL12L6-25	4467-126
		RAL12L6-25L	4468-1
		RAL12L6-35	4468-88
		RAL12L6-35L	4468-89
	MMI	HAL12L6-2C	4476-12
		HAL12L6-2M	4476-25
		HAL12L6C	4475-40
		HAL12L6M	4475-121
		PAL12L6-2C	★ **689**
			★ **4681**
			4472-103
		PAL12L6-2M	★ **689**
			★ **4681**
			4473-8
		PAL12L6C	★ **689**
			★ **4681**
			4471-53
		PAL12L6M	★ **689**
			★ **4681**
			4472-46
	National	PAL12L6AC	4470-39
		PAL12L6AM	4471-8
		PAL12L6C	4471-81
		PAL12L6M	4472-62
	Zytrex	ZX-CAL12L6	4475-88
12L60	**Raytheon**	**CGA12L60**	★ **700**
			★ **4740**
			4454-2
12P10	TI	TIBPAL12P10	4469-34
12P4	MMI	PLE12P4C	4474-34
		PLE12P4M	4474-35
12P6	Lattice	RAL12P6-15	4467-40
		RAL12P6-15L	4467-41
		RAL12P6-25	4468-2
		RAL12P6-25L	4468-3
		RAL12P6-35	4468-90
		RAL12P6-35L	4468-91
	MMI	ZHAL12P6C	4475-58
	Panatech	**12P6**	★ **4736**
			4473-34
		12P6BP-35	★ **4736**
			4471-92
	VTI	**VP12P6**	★ **4807**
			4474-40
12P8	MMI	PLE12P8C	4474-36
		PLE12P8M	4474-37
13	LogicDev	LMU13	843-57
		LMU13C	807-95
		LMU13M	807-120
	Supertex	VC13	2898-81
		VF13	2896-40
	TeledyneC	CAG13	2823-9
130	Cherry	CS130	3320-16
			3400-78
	Intersil	IT130	3309-158
		IT130A	3309-159
	Motorola	**MVME130**	★ **2109**
	SGS	L130	3387-11
	Siemens	TBA130	3326-62
			(Continued)

Base Number	Source	Device	Page-Line
130	Siliconix	LD130	¶ 390-18
			¶ 391-4
1300	**AMCC**	**Q1300S**	★ **4603**
			4439-6
	Cherry	CS1300	4441-25
	Motorola	**MCA1300ALS**	★ **4718**
			4451-42
	National	MCA1300ALS	¶ 443-8
			¶ 444-1
			¶ 445-16
	Signetics	**SAA1300**	★ **3731**
			★ **3733**
			3328-23
13000	**CalDevices**	**CHA13000**	★ **4610**
			4441-1
13001	Hitachi	HA13001	3318-92
	Motorola	**MC13001**	★ **3612**
			3327-8
			¶ 417-14
		MC13001X	★ **3612**
			3327-9
13002	**Motorola**	**MC13002**	★ **3612**
			3327-10
		MC13002X	★ **3612**
			3327-11
13006	National	LF13006	890-71
			¶ 407-13
			¶ 407-14
			3399-68
13007	Hitachi	HA13007	2892-16
			2898-68
	National	LF13007	890-72
			¶ 407-13
			¶ 407-14
			3399-69
1301	National	LM1301	3319-43
13010	**Motorola**	**MC13010**	★ **3612**
			3327-12
13014	**Motorola**	**MC13014**	★ **3612**
			3327-13
13020	**Motorola**	**MC13020**	★ **3614**
			3321-18
13024	**Motorola**	**MC13024**	★ **3613**
			3325-160
			3327-142
1303	National	LM1303	3319-44
	Signetics	**PCF1303**	★ **3726**
13030	Motorola	MC13030	3327-14
1305	Interdesign	MOF1305B	2881-55
13080	National	LM13080	3355-59
1309	**Motorola**	**MC1309**	★ **3614**
			3322-109
131	Cherry	CS131	3320-17
	Intersil	IT131	3309-160
	Motorola	**MVME131**	★ **2110**
	National	LM131	3405-107
		LM131A	3405-108
	SGS	L131	3388-10
1310	Exar	XR1310	3322-107
	Motorola	**MC1310**	★ **3614**
			3322-110
	National	LM1310	3322-112
1314	Supertex	HV1314	2830-92
1316	Supertex	HV1316	2830-93
1318	TRW-LSI	TDC1318	844-11

Base Number	Source	Device	Page-Line
132	Cherry	CS132	3320-18
	Intersil	IT132	3309-161
	National	AF132	3379-58
1320	Sanyo	LA1320	3326-54
	Signetics	**ACE1320**	★ **4747**
			4455-26
		ACE1320M	★ **4747**
			4455-14
132008	TI	T132008	1439-14
13201	National	LF13201	2824-112
132016	TI	T132016	1439-15
		T132016-XDS	1821-16
13202	National	LF13202	2824-113
132032	TI	T132032-XDS	1821-17
		T132032D	1439-16
		T132032T	1439-17
132081	TI	T132081	1439-18
1321	TeledyneP	1321	3352-57
		1321-01	3352-58
1322	TeledyneP	1322	3357-69
		1322-01	3357-70
1324	Panasonic	AN1324	3335-4
1327	Motorola	MC1327	3324-126
133	Fairchild	CCD133	3400-15
			3400-54
	Intersil	**DG133A**	★ **3196**
			2822-110
		DG133B	★ **3196**
			2823-7
	National	AF133	3379-59
			¶ 410-15
	Siliconix	DG133	¶ 402-16
		DG133A	★ **3223**
			2822-111
		DG133B	★ **3223**
			2823-8
1330	Motorola	MC1330	¶ 418-1
			¶ 418-2
	SGS	TDA1330	3322-132
		TEA1330	3322-133
1330A1	**Motorola**	**MC1330A1**	★ **3612**
			3327-15
1330A2	**Motorola**	**MC1330A2**	★ **3612**
			3327-16
1332	Sanyo	LB1332	3325-9
	TeledyneP	1332	3331-89
			3355-4
13331	National	LF13331	2824-114
13332	National	LF13332	2824-115
13333	National	LF13333	2824-116
1334	Telefunken	U1334	3323-66
	TRW-LSI	TDC1334	843-137
1339	Panasonic	AN1339	3315-42
134	Fairchild	CCD134	3400-16
			3400-55
	Ferranti	ZNA134E	3324-63
		ZNA134J	3324-64
	Intersil	**DG134A**	★ **3196**
			2823-22
		DG134B	★ **3196**
			2823-34
	LinearTech	LM134	3404-137
	National	AF134	3379-60
			¶ 410-15
		LM134	3398-104
			3404-142
	Siliconix	**DG134A**	★ **3223**
			2823-23
		DG134B	★ **3223**
			2823-35

Base Number	Source	Device	Page-Line
13406	Hitachi	HA13406W	2895-88
			3327-147
13408	Hitachi	HA13408	2895-40
1341	Motorola	MHW1341	3324-82
	TeledyneP	1341	3357-136
		1341-01	3354-37
1342	Motorola	MHW1342	3324-83
	TeledyneP	1342	3357-135
13421	Hitachi	HA13421A	2895-117
13426	Hitachi	HA13426	3327-151
1343	Motorola	MHW1343	3324-84
13431	Hitachi	HA13431	3327-152
13432	Hitachi	HA13432	3327-153
1344	TeledyneP	1344	3346-169
		1344-01	3346-167
1345	TeledyneP	1345	3357-120
1346	TeledyneP	1346	3346-156
		1346-01	3346-157
1347	TeledyneP	1347	3340-86
		1347-01	3340-87
1349	**Motorola**	**MC1349**	★ **3612**
			3327-17
135	National	LM135	3404-143
1350	GI	AY3-1350	3316-60
			3317-1
			¶ 416-15
	ITT	SAA1350	3323-31
	Motorola	**MC1350**	★ **3612**
			★ **3613**
			3321-132
			3327-18
			¶ 418-1
			¶ 418-2
	NEC	μPC1350	3316-62
13508	National	LF13508	2830-183
13509	National	LF13509	2830-77
1351	ITT	SAA1351	3323-32
1352	**Motorola**	**MC1352**	★ **3612**
			3327-19
			¶ 418-1
			¶ 418-2
	NEC	μPC1352	3324-144
	Sanyo	LA1352	3327-45
1353	Motorola	MC1353	¶ 418-1
			¶ 418-2
	Sanyo	LA1353	3327-46
1354	Sanyo	LA1354	3327-47
1355	**Motorola**	**MC1355**	★ **3613**
			3319-96
			3322-1
1356	NEC	μPC1356	3327-31
1357	**Motorola**	**MC1357**	★ **3613**
			3322-2
	Sanyo	LA1357N	3327-48
1358	**Motorola**	**MC1358**	★ **3613**
			3322-3
			3326-36
	Panasonic	AN1358	3367-49
1359	TeledyneP	1359	3357-139
		1359-01	3357-140
136	LinearTech	LM136-2	3402-45
	Maxim	MAX136	2848-56
	National	LM136	¶ 428-1
		LM136-2	3402-62
		LM136-5	3402-111
			(Continued)

Arranged alphanumerically from left to right.

Base Number	Source	Device	Page-Line
136	National	LM136A-2	3402-63
		LM136A-5	3402-112
13600	Exar	XR13600	3320-140
	National	LM13600	3366-31
	Signetics	LM13600	3366-30
		LM13600A	3363-37
1361	NEC	μPC1361	3324-108
1362	NEC	μPC1362	3324-109
1363	NEC	μPC1363	3324-110
	Sanyo	LA1363	3326-55
1364	Sanyo	LA1364	3324-55
1365	Sanyo	LA1365	3326-56
1368	Hitachi	HA1368	3316-191
	Sanyo	LA1368	3325-6
1369	Sanyo	LA1369	3325-7
137	Cherry	CS137	3320-19
	IPS	**IP137**	★**3599**
			3394-65
		IP137A	★**3599**
			3394-66
		IP137AHV	★**3599**
			3395-16
		IP137HV	★**3599**
			3395-17
	LinearTech	LM137	3394-71
		LM137HV	3395-12
			3395-22
		LT137A	3394-73
		LT137AHV	3395-14
			3395-24
	MCE	MCELM137	3394-75
	Motorola	**LM137**	★**3625**
			3394-78
	National	LM137	3394-81
			3395-33
			¶ 428-1
		LM137HV	3385-35
		LT137A	3394-84
	SiliconG	SG137	3394-86
		SG137A	3394-87
		SG137HV	3385-43
	ThomsonCSF	LM137	3394-92
			3395-36
	Unitrode	UC137	3395-1
			3395-38
1370	TI	TMS1370	1413-29
13700	National	LM13700	3363-85
		LM13700A	3362-26
1372	**Motorola**	**MC1372**	★**1661**
			★**3613**
			3327-20
			3327-123
			¶ 363-13
			¶ 364-3
			¶ 373-1
	NEC	μPC1372	3324-145
1373	**Motorola**	**MC1373**	★**3613**
			3327-21
			3327-124
1374	Hitachi	HA1374	3318-178
	Motorola	**MC1374**	★**3613**
			3325-159
			¶ 417-6
13741	National	LF13741	3348-17
			3330-33
			3357-121
1376	**Motorola**	**MC1376**	★**3613**
			3322-73
1377	Hitachi	HA1377	3318-148
	Motorola	**MC1377**	★**3613**
			3324-127
			¶ 428-4
	NEC	μPC1377	3324-146
1378	**Motorola**	**MC1378**	★**3613**
			3325-62
	NEC	μPC1378	3326-130
138	Fairchild	μA138	3393-39
	IPS	**IP138**	★**3599**
			3393-42
		IP138A	★**3599**
			3393-43
	LinearTech	LM138	3393-48
		LT138A	3393-50
	Micropac	MLM138-05	3385-60
		MLM138-12	3387-94
		MLM138-15	3388-85
	National	LM138	3393-52
	SiliconG	SG138	3393-55
		SG138A	3393-56
1382	NEC	μPC1382	3326-43
1384	Hitachi	HA1384	3318-93
1385	Sanyo	LA1385	3326-131
1388	Hitachi	HA1388	3318-94
139	Cherry	CS139	3320-37
	Fairchild	μA139M	3316-2
	Intersil	**DG139A**	★**3196**
			2827-88
	Motorola	**LM139**	★**3631**
			3316-3
		LM139A	★**3631**
			3315-30
	National	LM139	3316-4
		LM139A	3315-31
	PMI	**PM-139**	★**3639**
			3316-5
		PM-139A	★**3639**
			3315-32
	Raytheon	LM139	3316-6
	RCA	**CA139**	★**3672**
			★**3677**
			3316-7
		CA139A	★**3672**
			★**3677**
			3315-33
	SGS	LM139	3316-8
		LM139A	3315-34
	Signetics	**LM139A**	★**3725**
			3316-9
	Siliconix	D139A	886-129
			2828-106
		D139B	886-130
			2828-107
		D139C	2828-108
		DG139A	★**3223**
			2827-89
		DG139B	★**3223**
			2827-91
	TI	**LM139**	★ **719**
			3316-10
		LM139A	★ **719**
			3315-35
	ThomsonCSF	LM139	3316-11
1390	Sanyo	LA1390	3325-8
1391	**Motorola**	**MC1391**	★**3613**
			3325-119
		MHW1391	3324-85
	National	LM1391	3325-121
	NEC	μPC1391	3326-85
	RCA	CA1391	3325-125
1392	Hitachi	HA1392	3318-95
	Motorola	MHW1392	3324-86
1393	Hitachi	HA1393	3318-96
	Motorola	MC1393	3326-123
1394	Hitachi	HA1394	3318-149
	Motorola	**MC1394**	★**3613**
			3325-120
	NEC	μPC1394	3326-96
	RCA	CA1394	3325-126
1396	Hitachi	HA1396	3318-97
1397	Hitachi	HA1397	3318-98
	NEC	μPC1397	3326-108
1398	RCA	CA1398	3324-148
1399	Motorola	MC1399	3324-128
14	Astraea	AC-V14	2027-29
	DDC	HRCDX-14	3403-99
		HRCT-14	3403-100
		HRDC-14	3403-102
		HSCDX-14	3403-103
		HSCT-14	3403-104
		HSDC-14	3403-106
		HXCDX-14	3403-116
		HXCT-14	3403-117
		HXDC-14	3403-119
	Datel	**DAC-HA14BC**	★**3160**
			★**3162**
			2870-38
		DAC-HA14BC-1	★**3160**
			★**3162**
			2870-40
		DAC-HA14BM	★**3160**
			★**3162**
			2870-39
		DAC-HA14BM-1	★**3160**
			★**3162**
			2870-41
	Datricon	ACS14/64	2017-32
	Lambda	LAS14AU	3392-110
	MicroPwr	**MPOP-14**	★ **688**
			★**3607**
			3363-8
		MPOP-14A	★ **688**
			★**3607**
			3362-12
		MPOP-14B	★ **688**
			★**3607**
			3365-25
		MPOP-14C	★ **688**
			★**3607**
			3363-11
		MPOP-14D	★ **688**
			★**3607**
			3365-26
		MPOP-14E	★ **688**
			★**3607**
			3362-13
	PMI	**OP-14**	★**3636**
			3363-16
			¶ 386-4
		OP-14A	★**3636**
			3362-7
		OP-14B	★**3636**
			3365-29
		OP-14C	★**3636**
			3363-17
		OP-14D	★**3636**
			3365-22
		OP-14E	★**3636**
			3362-8
	TeledyneC	CAG14	2822-27
	Wintek	**MCC14**	★**2118**
			2011-29
140	Cherry	CS140	2895-140
	IPS	**IP140-12**	★**3599**
			3387-27
		IP140-15	★**3599**
			3388-27
		IP140-5	★**3599**
			3384-87
		IP140A-12	★**3599**
			3387-28
		IP140A-15	★**3599**
			3388-28
		IP140A-5	★**3599**
			(Continued)
140	IPS	IP140A-5	3384-88
	Intersil	**DG140A**	★**3196**
			2827-23
	Motorola	**LM140-12**	★**3622**
			★**3623**
			★**3624**
			3387-39
		LM140-15	★**3622**
			★**3623**
			★**3624**
			3388-39
		LM140-18	★**3622**
			★**3623**
			★**3624**
			3388-128
		LM140-24	★**3622**
			★**3623**
			★**3624**
			3389-90
		LM140-5	★**3622**
			★**3623**
			★**3624**
			3384-103
		LM140-6	★**3622**
			★**3623**
			★**3624**
			3385-99
		LM140-8	★**3622**
			★**3623**
			★**3624**
			3386-43
		LM140A-12	★**3622**
			★**3623**
			★**3624**
			3387-40
	National	LM140-12	3387-48
		LM140-15	3388-45
		LM140-5	3384-111
		LM140A-12	3387-49
		LM140A-15	3388-46
		LM140A-5	3384-112
		LM140LA-12	3386-111
		LM140LA-15	3387-113
		LM140LA-5	3384-9
	SiliconG	SG140-05K	3384-118
		SG140-05R	3384-119
		SG140-05T	3384-48
		SG140-06K	3385-108
		SG140-06R	3385-109
		SG140-06T	3385-83
		SG140-08K	3386-52
		SG140-08R	3386-53
		SG140-08T	3386-25
		SG140-12K	3387-56
		SG140-12R	3387-57
		SG140-12T	3387-4
		SG140-15K	3388-51
		SG140-15R	3388-52
		SG140-15T	3388-5
		SG140-18K	3389-4
		SG140-18R	3389-5
		SG140-18T	3388-105
		SG140-20K	3389-39
		SG140-20R	3389-40
		SG140-20T	3389-30
		SG140-24K	3389-96
		SG140-24R	3389-97
		SG140-24T	3389-68
	Siliconix	**DG140A**	★**3223**
			2827-26
		DG140B	★**3223**
			2827-28
1400	AMCC	Q1400C	4439-7
	Cherry	CML1400	4462-21
		CS1400	4462-22
	GI	ER1400	3811-42
			¶ 415-12
			¶ 433-3
			¶ 433-8
	Inmos	**IMS1400-10L**	★ **685**
			★**4040**
			3844-91
		IMS1400-35	★ **685**
			★**4040**
			3844-22
		IMS1400-45	★ **685**
			(Continued)

¶ Indicates page number in Application Note Directory.
★ Indicates additional data is provided on the page noted.

Base Number	Source	Device	Page-Line
1400	**Inmos**	**IMS1400-45**	★**4040** 3844-39
		IMS1400-55	★ **685** ★**4040** 3844-56
		IMS1400-55M	★ **685** ★**4040** 3844-57
		IMS1400-70L	★ **685** ★**4040** 3844-73
		IMS1400-70M	★ **685** ★**4040** 3844-74
		IMS1400L	★ **685** ★**4040** 3844-75
	Motorola	**MC1400-10**	★**3628** 3403-41
		MC1400-2	★**3628** 3402-56
		MC1400-5	★**3628** 3402-107
		MC1400-6	★**3628** 3402-140
		MC1400A	★**3628**
	National	LX1400	¶ 429-6
	Panasonic	MN1400	1450-3 ¶ 380-8 1409-33
	Signetics	ACE1400	4455-20
	TI	SE1400P	1451-84 1413-21
		TMS1400	1413-30
	Toshiba	T1400	3321-88
14000	**Motorola**	**MC14000UBA**	★**1123** 826-177
		MC14000UBC	★**1123** 826-178
14001	**Motorola**	**MC14001BA**	★**1122** 827-157
		MC14001BC	★**1122** 827-158
		MC14001UBA	★**1122** 827-159
		MC14001UBC	★**1122** 827-160
14002	**Motorola**	**MC14002BA**	★**1123** 827-34
		MC14002BC	★**1123** 827-35
		MC14002UBA	★**1123** 827-36
		MC14002UBC	★**1123** 827-37
14006	**Motorola**	**MC14006BA**	★**1128** 836-179 3855-64
		MC14006BC	★**1128** 836-180 3855-63
14007	Mostek	MK14007	1460-133
	Motorola	**MC14007UBA**	★**1124** 810-157
		MC14007UBC	★**1124** 810-158
14008	**Motorola**	**MC14008BA**	★**1132** 806-58
		MC14008BC	★**1132** 806-59
1400B1	Vatic	M1400B1	4457-43
1401	**AD**	**ADSP-1401**	★**1004**
	NEC	μPC1401	3324-147
	SiliconG	SG1401	3308-24 ¶ 410-2
14011	**Motorola**	**MC14011BA**	★**1122** 825-86
		MC14011BC	★**1122** 825-87
		MC14011UBA	★**1122** 825-88
		MC14011UBC	★**1122** 825-89
14012	**Motorola**	**MC14012BA**	★**1122** 824-144
		MC14012BC	★**1122** 824-145
		MC14012UBA	★**1122** 824-146
		MC14012UBC	★**1122** 824-147
14013	**Motorola**	**MC14013BA**	★**1126** 820-53
		MC14013BC	★**1126** 820-54
14014	**Motorola**	**MC14014BA**	★**1128** 836-123 3856-27
		MC14014BC	★**1128** 836-124
14015	**Motorola**	**MC14015BA**	★**1129** 834-160 3855-42
		MC14015BC	★**1129** 834-161 3855-35
14016	**Motorola**	**MC14016BA**	★**1130** 2824-31
		MC14016BC	★**1130** 2824-32
14017	**Motorola**	**MC14017BA**	★**1128** 814-91
		MC14017BC	★**1128** 814-92
14018	**Motorola**	**MC14018BA**	★**1128** 816-99
		MC14018BC	★**1128** 816-100
1402	AMD	AM1402AC	3854-3
		AM1402AM	3854-4
	Panasonic	MN1402	1450-4 ¶ 380-8 1409-34
	SiliconG	SG1402	¶ 422-15
14020	**Motorola**	**MC14020BA**	★**1128** 813-184
		MC14020BC	★**1128** 813-185
14021	**Motorola**	**MC14021BA**	★**1128** 835-120 3856-28
		MC14021BC	★**1128** 835-121 3856-16
14022	**Motorola**	**MC14022BA**	★**1128** 816-74
		MC14022BC	★**1128** 816-75
14023	**Motorola**	**MC14023BA**	★**1122** 825-19
		MC14023BC	★**1122** 825-20
		MC14023UBA	★**1122** 825-21
		MC14023UBC	★**1122** 825-22
14024	**Motorola**	**MC14024BA**	★**1128** 813-54
		MC14024BC	★**1128** 813-55
14025	**Motorola**	**MC14025BA**	★**1122** 827-87
		MC14025BC	★**1122** 827-88
		MC14025UBA	★**1122** 827-89
		MC14025UBC	★**1122** 827-90
14027	**Motorola**	**MC14027BA**	★**1126** 823-37
		MC14027BC	★**1126** 823-38
14028	**Motorola**	**MC14028BA**	★**1130** 817-33
		MC14028BC	★**1130** 817-34
14029	**Motorola**	**MC14029BA**	★**1127** 816-118 (Continued)
14029	**Motorola**	**MC14029BC**	★**1127** 816-119
1403	AMD	AM1403AC	3854-8
		AM1403AM	3854-9
	AD	**AD1403**	★**3136** 3402-37
		AD1403A	★**3136** 3402-38
	Inmos	**IMS1403**	★**4042**
	Motorola	**MC1403**	★**3628** 3402-57
		MC1403A	★**3628** 3402-58
	Panasonic	MN1403	1450-5 1409-35
14032	**Motorola**	**MC14032BA**	★**1132** 806-21
		MC14032BC	★**1132** 806-22
14034	**Motorola**	**MC14034BA**	★**1128** 835-140 3855-106
		MC14034BC	★**1128** 835-141 3855-99
14035	**Motorola**	**MC14035BA**	★**1128** 835-65 3855-15
		MC14035BC	★**1128** 835-66 3855-5
14038	**Motorola**	**MC14038BA**	★**1132** 806-10
		MC14038BC	★**1132** 806-11
1404	AMD	AM1404AC	3854-12
		AM1404AM	3854-13
	Motorola	**MC1404-10**	★**3628** 3403-42
		MC1404-5	★**3628** 3402-108
		MC1404-6	★**3628** 3402-141
		MC1404A-10	★**3628** 3403-43
	Panasonic	MN1404	1450-6 1409-36
14040	**Motorola**	**MC14040BA**	★**1128** 813-142
		MC14040BC	★**1128** 813-143
14042	**Motorola**	**MC14042BA**	★**1126** 829-36
		MC14042BC	★**1126** 829-37
14043	**Motorola**	**MC14043BA**	★**1126** 829-72
		MC14043BC	★**1126** 829-73
14044	**Motorola**	**MC14044BA**	★**1126** 829-55
		MC14044BC	★**1126** 829-56
14046	Motorola	MC14046BA	837-114 3375-46
		MC14046BC	837-115 3375-47
14049	**Motorola**	**MC14049UBA**	★**1124** 809-34
		MC14049UBC	★**1124** 809-35
1405	Lambda	LAS1405	3385-18
	Panasonic	MN1405	1450-7 1411-1
	Sanyo	LB1405	2874-4 3400-82
14050	**Motorola**	**MC14050BA**	★**1124** 809-78
		MC14050BC	★**1124** 809-79
14051	**Motorola**	**MC14051BA**	★**1130** 2830-109 (Continued)
14051	**Motorola**	**MC14051BC**	★**1130** 2830-110
14052	**Motorola**	**MC14052BA**	★**1130** 2830-9
		MC14052BC	★**1130** 2830-10
14053	**Motorola**	**MC14053BA**	★**1130** 2826-41
		MC14053BC	★**1130** 2826-42
1406	**Motorola**	**MC1406**	★**3630** 2849-41
	NEC	μPC1406	3326-44
14060	**Motorola**	**MC14060B**	★**1128** 814-27
14066	**Motorola**	**MC14066BA**	★**1130** 2824-4
		MC14066BC	★**1130** 2824-5
14067	Motorola	MC14067BA	833-73 2831-55
		MC14067BC	833-74 2831-56
14068	**Motorola**	**MC14068BA**	★**1122** 825-173
		MC14068BC	★**1122** 825-174
14069	**Motorola**	**MC14069UBA**	★**1124** 811-58
		MC14069UBC	★**1124** 811-59
14070	**Motorola**	**MC14070BA**	★**1123** 828-60
		MC14070BC	★**1123** 828-61
14071	**Motorola**	**MC14071BA**	★**1122** 826-158
		MC14071BC	★**1122** 826-159
14072	**Motorola**	**MC14072BA**	★**1122** 826-72
		MC14072BC	★**1122** 826-73
14073	**Motorola**	**MC14073BA**	★**1122** 824-28
		MC14073BC	★**1122** 824-29
14075	**Motorola**	**MC14075BA**	★**1122** 826-109
		MC14075BC	★**1122** 826-110
14076	**Motorola**	**MC14076BA**	★**1126** 820-160
		MC14076BC	★**1126** 820-161
14077	**Motorola**	**MC14077BA**	★**1123** 828-118
		MC14077BC	★**1123** 828-119
14078	**Motorola**	**MC14078BA**	★**1123** 828-3
		MC14078BC	★**1123** 828-4
1408	AMD	AM1408-6	2855-1
		AM1408-7	2854-42
		AM1408-8	2852-52
		SSS1408A-7	2854-38
		SSS1408A-8	2852-44
	AD	AD1408-7	2854-39
		AD1408-8	2852-46
		AD1408-9	2851-29
	Fairchild	DAC1408	2852-55
		DAC1408AC	2853-1
		DAC1408BC	2854-40
		DAC1408CC	2854-54
	Motorola	**MC1408-6**	★**3630** 2855-2
		MC1408-7	★**3630** 2854-43
		MC1408-8	★**3630** 2853-3
	National	MC1408-6	2855-4
		MC1408-7	2854-45
		MC1408-8	2853-5 (Continued)

Arranged alphanumerically from left to right.

Base Number	Source	Device	Page-Line
1408	PMI	DAC-1408A-6	2854-55
		DAC-1408A-7	2854-41
		DAC-1408A-8	2852-48
	Signetics	**MC1408-7**	**★3720**
			2854-24
		MC1408-8	**★3720**
			2853-7
14081	**Motorola**	**MC14081BA**	**★1122**
			824-85
		MC14081BC	**★1122**
			824-86
14082	**Motorola**	**MC14082BA**	**★1122**
			823-178
		MC14082BC	**★1122**
			823-179
1409	**AD**	**HAS-1409**	**★3131**
			2846-27
		HDD-1409	2870-37
	Sanyo	LB1409	2874-5
14093	Motorola	MC14093B	¶ 361-12
		MC14093BA	**★1125**
			838-164
		MC14093BC	**★1125**
			838-165
14094	**Motorola**	**MC14094BA**	**★1129**
			835-165
			3856-77
		MC14094BC	**★1129**
			835-166
			3856-78
14097	Motorola	MC14097BA	833-160
			2830-201
		MC14097BC	833-161
			2830-202
14099	**Motorola**	**MC14099BA**	**★1126**
			831-13
		MC14099BC	**★1126**
			831-14
141	**Intersil**	**DG141A**	**★3196**
			2822-91
		DG141B	**★3196**
			2822-98
	Siemens	SAJ141	890-74
	Siliconix	**DG141A**	**★3223**
			2822-92
		DG141B	**★3223**
			2822-99
1410	**AD**	**ADSP-1410J**	**★1005**
			806-75
		ADSP-1410K	**★1005**
			806-76
		ADSP-1410S	**★1005**
			806-77
		ADSP-1410T	**★1005**
			806-78
	Plessey	MJ1410	3380-105
	SGS	TDA1410	3309-87
	Telefunken	TDA1410	3309-89
1411	**Motorola**	**MC1411**	**★3212**
			2894-104
			3310-109
	NEC	μPC1411	3326-31
1412	**Fujitsu**	**MB1412A**	**★1611**
			887-6
			2878-35
	Lambda	LAS1412	3387-82
	Motorola	**MC1412**	**★3212**
			2894-123
			3310-110
1413	**Motorola**	**MC1413**	**★3212**
			2894-76
			3310-111
1414	Motorola	MC1414	3314-24
	National	LM1414	3314-23
	Supertex	HV1414	2831-49
1415	Lambda	LAS1415	3388-74
	Sanyo	LB1415	2874-6
1416	**Motorola**	**MC1416**	**★3212**
			2894-57
			3310-112
	Sanyo	LB1416	2874-7
	Supertex	HV1416	2831-51
14160	**Motorola**	**MC14160BA**	**★1127**
			815-11
		MC14160BC	**★1127**
			815-12
14161	**Motorola**	**MC14161BA**	**★1127**
			812-21
		MC14161BC	**★1127**
			812-22
14162	**Motorola**	**MC14162BA**	**★1127**
			814-145
		MC14162BC	**★1127**
			814-146
14163	**Motorola**	**MC14163BA**	**★1127**
			811-158
		MC14163BC	**★1127**
			811-159
14174	**Motorola**	**MC14174BA**	**★1126**
			821-33
		MC14174BC	**★1126**
			821-34
14175	**Motorola**	**MC14175BA**	**★1126**
			820-120
		MC14175BC	**★1126**
			820-121
1419	Sanyo	LB1419	2874-8
14194	**Motorola**	**MC14194BA**	**★1128**
			835-52
			3855-20
		MC14194BC	**★1128**
			835-53
142	**Intersil**	**DG142A**	**★3196**
			2827-92
	SGS	M142	3857-20
		M142A	3857-21
	Siliconix	**DG142A**	**★3223**
			2827-93
		DG142B	**★3223**
			2827-95
1420	**Inmos**	**IMS1420-10L**	**★685**
			★4041
			3842-104
		IMS1420-45	**★685**
			★4041
			3841-93
		IMS1420-55	**★685**
			★4041
			3842-31
		IMS1420-55M	**★685**
			★4041
			3842-32
		IMS1420-70L	**★685**
			★4041
			3842-74
		IMS1420-70M	**★685**
			★4041
			3842-75
		IMS1420L	**★685**
			★4041
			3842-76
	SGS	TDA1420	3309-88
1421	Inmos	IMS1421-40	3841-50
		IMS1421-50	3841-97
	TeledyneP	1421	3357-100
			¶ 404-2
		1421-01	3357-99
		1421-02	3357-98
142100	**Motorola**	**MC142100**	**★3633**
			2829-16
			3378-9
142101	**Motorola**	**MC142101**	**★3633**
142103	**Motorola**	**MC142103**	**★3633**
1422	Fujitsu	MB1422	887-1
			2892-68
1423	**Inmos**	**IMS1423-25**	**★685**
			★4042
			3841-10
		IMS1423-35	**★685**
			★4042
			3841-43
		IMS1423-45	**★685**
			★4042
			3841-88
		IMS1423-45M	**★685**
			★4042
			3841-89
		IMS1423-55M	**★685**
			★4042
			3842-26
1424	TeledyneP	1424	3357-174
1425	TeledyneP	1425	3345-27
		1425-01	3343-51
		1425-02	3343-50
1426	**Fujitsu**	**MB1426**	**★1611**
			887-7
			2878-36
	Sanyo	LB1426	2874-9
	TeledyneP	1426	3345-30
		1426-01	3343-53
		1426-02	3344-7
		1426-03	3344-6
143	Fairchild	CCD143	3400-17
			3400-61
	Intersil	**DG143**	**★3196**
			2825-52
	National	LM143	3331-85
	Siliconix	**DG143A**	**★3223**
			2825-53
		DG143B	**★3223**
			2825-62
	Telefunken	U143	2875-34
			3324-107
		U143M	¶ 420-4
1430	Panasonic	MN1430	1450-8
			1411-2
	Plessey	SL1430	3327-33
	TeledyneP	1430	3330-131
			3331-25
			3334-223
			3346-44
		1430-HR	3331-26
			3334-224
			3346-45
1431	Plessey	SL1431	3327-34
1432	Panasonic	MN1432	1450-9
			1411-3
	Plessey	SL1432	3327-35
143403	**Motorola**	**MC143403**	**★3618**
			3374-19
143404	**Motorola**	**MC143404**	**★3618**
			3374-18
1435	**Datel**	**AM-1435C**	**★3158**
			★3160
			★3163
			3351-6
		AM-1435M	**★3158**
			★3160
			★3163
			3351-7
		AM-1435MC	**★3158**
			★3160
			★3163
			3331-39
		AM-1435MM	**★3158**
			★3160
			★3163
			3331-40
		AM-1435MR	**★3158**
			(Continued)
1435	**Datel**	**AM-1435MR**	**★3160**
			★3163
			3331-41
	MicroNet	MN1435	3345-23
	Panasonic	MN1435	1450-10
			1411-4
	TeledyneP	1435	3331-48
			3334-275
			3354-36
		1435-H4	3354-35
		1435-HR	3354-34
1436	**Motorola**	**MC1436**	**★3616**
			3331-92
			3357-46
		MC1436C	**★3616**
			3331-103
			3357-92
	National	LM1436	3331-104
			3357-95
	Sanyo	LB1436	2874-10
	SiliconG	SG1436	3331-94
			3357-47
		SG1436C	3331-106
			3357-93
1437	HyComp	HC1437	3346-42
		HC1437-883	3346-43
	Motorola	**MC1437**	**★3617**
			3368-3
	TeledyneP	1437	3344-43
		1437-HR	3344-44
1438	TeledyneP	1438	3346-36
		1438-HR	3346-37
1439	**Motorola**	**MC1439**	**★3615**
			3356-28
144	**Intersil**	**DG144A**	**★3196**
			2825-30
		DG144B	**★3196**
			2825-42
	National	LM144	3331-86
			3352-36
	Siliconix	**DG144A**	**★3223**
			2825-31
		DG144B	**★3223**
			2825-43
		L144	¶ 406-18
		L144A	**★3248**
			3334-63
		L144B	**★3248**
			3334-64
		L144C	**★3248**
			3334-65
	Siltronics	S144	3369-11
1440	Plessey	MJ1440	3379-92
	Siemens	TBA1440G	3327-53
	ThomsonCSF	TBA1440G	3327-92
14400	**Motorola**	**MC14400**	**★3633**
			3379-45
14401	**Motorola**	**MC14401**	**★3633**
			3379-46
14402	**Motorola**	**MC14402**	**★3633**
			3379-47
14403	**Motorola**	**MC14403**	**★3633**
			3377-91
			3379-48
14405	**Motorola**	**MC14405**	**★3633**
			3377-92
			3379-49
14407	**Motorola**	**MC14407**	**★3633**
14408	**Motorola**	**MC14408**	**★3633**
			3378-86
14409	**Motorola**	**MC14409**	**★3633**
			3378-87
1441	Siemens	TBA1441	3327-54
	ThomsonCSF	TBA1441	3327-93
14410	**Motorola**	**MC14410**	**★3633**
			3382-79
14411	**Motorola**	**MC14411**	**★3633**
			837-55
			2900-24

¶ Indicates page number in Application Note Directory.
★ Indicates additional data is provided on the page noted.

Base Number	Source	Device	Page-Line
144110	**Motorola**	**MC144110**	★**3630**
			2849-21
144111	**Motorola**	**MC144111**	★**3630**
			2849-22
14412	Cermetek	MC14412	¶ 395-18
	Exar	XR14412	¶ 411-17
		XR14412F	★**3548**
			3380-64
		XR14412V	★**3548**
			3380-65
	Motorola	**MC14412**	★**3633**
			3380-66
			¶ 428-7
14413	**Motorola**	**MC14413-1**	★**3633**
			3379-68
		MC14413-2	★**3633**
			3379-69
14414	**Motorola**	**MC14414-1**	★**3633**
			3379-70
		MC14414-2	★**3633**
			3379-71
14415	Motorola	MC14415	838-137
		MC14415E	838-138
14416	**Motorola**	**MC14416**	★**3633**
			3381-102
14417	**Motorola**	**MC14417**	★**3633**
			3381-103
14418	**Motorola**	**MC14418**	★**3633**
			3381-104
14419	**Motorola**	**MC14419**	★**3633**
			842-51
			¶ 437-18
			2880-4
			3379-42
1443	TeledyneP	1443	3346-166
		1443-HR	3345-29
14433	**Motorola**	**MC14433**	★**3629**
			2848-19
			¶ 364-17
			¶ 387-12
	TeledyneS	TSC14433	2848-22
			¶ 397-12
			¶ 399-6
		TSC14433A	2848-23
		TSC14433B	2848-24
1444	Plessey	MJ1444	3381-106
	Ziatech	ZT1444	2031-11
14442	**Motorola**	**MC14442**	★**3629**
			2834-50
14443	**Motorola**	**MC14443**	★**3629**
			2837-38
14444	**Motorola**	**MC14444**	★**3629**
			2837-37
14447	**Motorola**	**MC14447**	★**3629**
			2837-39
1445	Motorola	MC1445	3307-104
	Plessey	MJ1445	3381-105
14457	**Motorola**	**MC14457**	★**3632**
			3323-33
		MCC14457	838-10
		XC14457	3323-39
14458	**Motorola**	**MC14458**	★**3632**
			3323-34
		MCC14458	838-11
		XC14458	3323-40
1446	Plessey	MJ1446	3381-99
14460	Motorola	MC14460	3319-138
14466	Motorola	MC14466	3328-13
14467	Motorola	MC14467	3328-14
14469	**Motorola**	**MC14469**	★**3632**
			837-47
			2900-14
14490	Motorola	MC14490	839-7
		MC14490E	839-8
14495	**Motorola**	**MC14495**	★**1130**
			819-128
			2875-30
14497	**Motorola**	**MC14497**	★**3632**
			3323-26
145	Fairchild	CCD145	3400-18
			3400-62
	Intersil	**DG145A**	★**3196**
			2827-83
	Siliconix	**DG145A**	★**3223**
			2827-84
		DG145B	★**3223**
			2827-86
	Telefunken	U145	3378-5
		UAA145	3404-92
1450	Panasonic	MN1450	1450-11
			1411-5
	Plessey	SP1450B	3380-100
	Sanyo	LB1450	3322-69
	Signetics	TDA1450	2846-29
14500	Motorola	MC14500B	837-46
			¶ 380-2
			1449-127
145000	**Motorola**	**MC145000**	★**1131**
			2875-21
145001	**Motorola**	**MC145001**	★**1131**
			2875-22
14501	**Motorola**	**MC14501UBA**	★**1124**
			828-133
		MC14501UBC	★**1124**
			828-134
14502	**Motorola**	**MC14502BA**	★**1124**
			809-7
		MC14502BC	★**1124**
			809-8
145026	**Motorola**	**MC145026**	★**3632**
			3323-35
145027	**Motorola**	**MC145027**	★**3632**
			3323-36
145028	**Motorola**	**MC145028**	★**3632**
			3323-37
145029	**Motorola**	**MC145029**	★**3632**
			3323-38
14503	**Motorola**	**MC14503BA**	★**1124**
			809-169
		MC14503BC	★**1124**
			809-170
14504	**Motorola**	**MC14504BA**	★**1123**
			★**1124**
			837-40
		MC14504BC	★**1123**
			★**1124**
			837-41
145040	**Motorola**	**MC145040**	★**3629**
			2834-52
145041	**Motorola**	**MC145041**	★**3629**
			2834-53
14505	Motorola	MCM14505A	831-110
			3832-13
		MCM14505C	831-111
			3832-15
14506	Motorola	MC14506BA	826-30
		MC14506BC	826-31
14508	**Motorola**	**MC14508BA**	★**1126**
			829-5
		MC14508BC	★**1126**
			829-6
1451	GI	ER1451	3811-21
			3811-43
14510	DDC	SDC-14510	3403-120
	Motorola	**MC14510BA**	★**1127**
			815-58
		MC14510BC	★**1127**
			815-59
145100	**Motorola**	**MC145100**	★**3633**
			2829-17
			3378-10
145106	Motorola	MC145106	3375-113
14511	Motorola	MC14511	¶ 398-9
		MC14511BA	★**1130**
			819-152
			2875-151
		MC14511BC	★**1130**
			819-153
			2875-152
14512	**Motorola**	**MC14512A**	★**1129**
			833-59
			(Continued)
14512	**Motorola**	**MC14512C**	★**1129**
			833-60
14513	**Motorola**	**MC14513BA**	★**1130**
			819-154
			2875-153
		MC14513BC	★**1130**
			819-155
			2875-154
14514	**Motorola**	**MC14514BA**	★**1130**
			818-182
		MC14514BC	★**1130**
			818-183
145145	Motorola	MC145145	3375-114
145146	Motorola	MC145146	3375-115
14515	**Motorola**	**MC14515BA**	★**1130**
			818-184
		MC14515BC	★**1130**
			818-185
145151	Motorola	MC145151	3375-116
145152	Motorola	MC145152	3375-117
145155	IMI	IMI145155	3375-109
	Motorola	MC145155	3375-118
145156	IMI	IMI145156	3375-110
	Motorola	MC145156	3375-119
145157	IMI	IMI145157	3375-111
	Motorola	MC145157	3375-120
145158	IMI	IMI145158	3375-112
	Motorola	MC145158	3375-121
145159	Motorola	MC145159	3375-122
14516	**Motorola**	**MC14516BA**	★**1127**
			812-93
		MC14516BC	★**1127**
			812-94
14517	**Motorola**	**MC14517BA**	★**1128**
			835-12
			3857-11
		MC14517BC	★**1128**
			835-13
			3857-8
14518	**Motorola**	**MC14518BA**	★**1127**
			815-185
		MC14518BC	★**1127**
			815-186
14519	**Motorola**	**MC14519BA**	★**1124**
			★**1129**
			833-18
		MC14519BC	★**1124**
			★**1129**
			833-19
14520	DDC	SDC-14520	3403-121
	Motorola	**MC14520BA**	★**1127**
			812-157
		MC14520BC	★**1127**
			812-158
14521	**Motorola**	**MC14521BA**	★**1131**
			834-136
		MC14521BC	★**1131**
			834-137
14522	**Motorola**	**MC14522BA**	★**1128**
			815-99
		MC14522BC	★**1128**
			815-100
14524	Motorola	MCM14524A	3849-2
		MCM14524C	3849-3
14526	**Motorola**	**MC14526BA**	★**1128**
			812-126
		MC14526BC	★**1128**
			812-127
14527	**Motorola**	**MC14527BA**	★**1132**
			838-35
		MC14527BC	★**1132**
			838-36
14528	**Motorola**	**MC14528BA**	★**1131**
			834-85
		MC14528BC	★**1131**
			834-86
14529	**Motorola**	**MC14529BA**	★**1130**
			2830-1
			2830-84
		MC14529BC	★**1130**
			2830-2
			2830-85
1453	Panasonic	MN1453	1450-12
			1411-6
14530	**Motorola**	**MC14530BA**	★**1124**
			828-130
		MC14530BC	★**1124**
			828-131
14531	**Motorola**	**MC14531BA**	★**113z**
			842-107
		MC14531BC	★**1132**
			842-108
14532	**Motorola**	**MC14532BA**	★**1131**
			842-74
		MC14532BC	★**1131**
			842-75
14534	Motorola	MC14534	¶ 356-14
		MC14534BA	★**1128**
			816-67
		MC14534BC	★**1128**
			816-68
14536	**Motorola**	**MC14536BA**	★**1131**
			834-112
		MC14536BC	★**1131**
			834-113
14537	Motorola	MCM14537A	831-119
			3832-89
		MCM14537C	831-120
			3832-90
14538	**Motorola**	**MC14538BA**	★**1131**
			834-56
		MC14538BC	★**1131**
			834-57
14539	**Motorola**	**MC14539BA**	★**1129**
			832-4
		MC14539BC	★**1129**
			832-5
1454	Motorola	MC1454	3318-31
	Panasonic	MN1454	1450-13
			1411-7
145402	**Motorola**	**MC145402**	★**3630**
			★**3633**
			3377-156
145406	**Motorola**	**MC145406**	★**3633**
			3379-32
145409	**Motorola**	**MC145409**	★**3633**
			3378-140
14541	**Motorola**	**MC14541BA**	★**1131**
			834-107
			3383-28
		MC14541BC	★**1131**
			834-108
			3383-29
145411	**Motorola**	**MC145411**	★**3633**
			3398-89
145412	**Motorola**	**MC145412**	★**3633**
145413	**Motorola**	**MC145413**	★**3633**
145414	**Motorola**	**MC145414**	★**3633**
			3379-80
145415	**Motorola**	**MC145415**	★**3633**
			3379-86
			¶ 410-11
145418	**Motorola**	**MC145418**	★**3633**
			2901-92
145419	Motorola	MC145419	2901-93
145421	**Motorola**	**MC145421**	★**3633**
145422	**Motorola**	**MC145422**	★**3633**
			2901-94
			3382-51
145423	Motorola	MC145423	2901-95
			3382-52
145425	**Motorola**	**MC145425**	★**3633**
			3382-50
145426	**Motorola**	**MC145426**	★**3633**
			2901-96
			3382-53
145428	**Motorola**	**MC145428**	★**3633**
			3378-25
145429	**Motorola**	**MC145429**	★**3633**
			3381-78
14543	Motorola	MC14543	¶ 398-9
		MC14543BA	★**1130**
			819-97
			2876-2
		MC14543BC	★**1130**
			819-98
			2876-3
145431	Motorola	MC145431	3379-82

Arranged alphanumerically from left to right.

Base Number	Source	Device	Page-Line
145432	**Motorola**	**MC145432**	★ **3633**
			3379-81
145433	**Motorola**	**MC145433**	★ **3633**
			3379-83
145434	Motorola	MC145434	3379-84
145439	**Motorola**	**MC145439**	★ **3633**
14544	**Motorola**	**MC14544BA**	★ **1130**
			2875-172
		MC14544BC	★ **1130**
			2875-173
145440	**Motorola**	**MC145440**	★ **3633**
			3379-100
			3380-41
			¶ 428-7
145441	**Motorola**	**MC145441**	★ **3633**
			3379-101
			3380-42
145445	**Motorola**	**MC145445**	★ **3633**
			3380-6
145450	**Motorola**	**MC145450**	★ **3633**
			3380-7
			¶ 410-11
14547	**Motorola**	**MC14547BA**	★ **1130**
			817-53
			2875-35
		MC14547BC	★ **1130**
			817-54
			2875-36
14549	**Motorola**	**MC14549BA**	★ **3630**
			838-17
		MC14549BC	★ **3630**
			838-18
1455	Motorola	MC1455	3383-39
		MC1455BC	3857-2
	Panasonic	MN1455	1450-14
			1411-8
	Plessey	SP1455B	3380-101
14551	**Motorola**	**MC14551BA**	★ **1130**
			2826-72
		MC14551BC	★ **1130**
			2826-73
14552	Motorola	MCM14552A	831-134
			3832-16
		MCM14552C	831-135
			3832-17
14553	**Motorola**	**MC14553BA**	★ **1128**
			816-16
		MC14553BC	★ **1128**
			816-17
14554	**Motorola**	**MC14554BA**	★ **1132**
			807-103
		MC14554BC	★ **1132**
			807-104
14555	**Motorola**	**MC14555BA**	★ **1130**
			817-60
		MC14555BC	★ **1130**
			817-61
14556	**Motorola**	**MC14556BA**	★ **1130**
			817-73
		MC14556BC	★ **1130**
			817-74
14557	**Motorola**	**MC14557BA**	★ **1128**
			837-25
			3857-6
		MC14557BC	★ **1128**
			837-26
14558	**Motorola**	**MC14558**	★ **1130**
			2875-37
14559	Motorola	MC14559BA	838-15
		MC14559BC	838-16
1456	**Motorola**	**MC1456**	★ **3616**
			3357-43
		MC1456C	★ **3616**
			3357-94
14560	Motorola	MC14560	¶ 352-13
		MC14560BA	★ **1132**
			806-7
		MC14560BC	★ **1132**
			806-8
14561	Motorola	MC14561	¶ 352-13
		MC14561BA	★ **1132**
			808-57
		MC14561BC	★ **1132**
			808-58
14562	**Motorola**	**MC14562BA**	★ **1129**
			837-30
			3856-114
		MC14562BC	★ **1129**
			837-31
			3856-113
14566	Motorola	MC14566BA	816-91
		MC14566BC	816-92
14568	Motorola	MC14568BA	816-95
			3375-33
		MC14568BC	816-96
			3375-34
14569	**Motorola**	**MC14569BC**	★ **1128**
			816-137
14572	**Motorola**	**MC14572A**	★ **1124**
			828-136
		MC14572C	★ **1124**
			828-137
14573	Motorola	MC14573	837-61
			3374-17
14574	Motorola	MC14574	837-60
			3316-59
14575	Motorola	MC14575	837-64
			3315-20
			3315-21
1458	Exar	XR1458	3330-1
			3367-6
	Fairchild	μA1458	3330-2
		μA1458CC	3367-7
	Motorola	**MC1458**	★ **3617**
			3330-4
			3367-10
		MC1458C	★ **3617**
			3368-28
		MC1458S	★ **3617**
			3367-42
	National	LM1458	3330-5
			3367-12
	NEC	μPC1458	3330-6
			3367-14
	Panasonic	AN1458	3363-78
	Raytheon	RC1458	3330-7
	RCA	**CA1458**	★ **3672**
			3330-8
	Samsung	**MC1458**	★ **3679**
			3367-4
		MC1458C	★ **3679**
			3368-26
	SGS	MC1458	3367-40
		MC1458C	3368-27
	Siemens	TBB1458	3366-58
	Signetics	**MC1458**	★ **3720**
			★ **3729**
			3330-9
			3367-20
		SA1458	★ **3729**
			3367-43
	ThomsonCSF	LM1458C	3367-23
		LM1458M	3365-48
14580	Motorola	MC14580BA	831-59
			3830-105
		MC14580BC	831-60
			3830-106
14581	**Motorola**	**MC14581BA**	★ **1132**
			806-176
		MC14581BC	★ **1132**
			806-177
14582	**Motorola**	**MC14582BA**	★ **1132**
			807-18
		MC14582BC	★ **1132**
			807-19
14583	Motorola	MC14583B	¶ 361-12
		MC14583BA	★ **1125**
			838-52
		MC14583BC	★ **1125**
			838-53
14584	Motorola	MC14584B	¶ 361-12
		MC14584BA	★ **1125**
			839-39
		MC14584BC	★ **1125**
			839-40
14585	**Motorola**	**MC14585BA**	★ **1131**
			807-56
			(Continued)
14585	**Motorola**	**MC14585BC**	★ **1131**
			807-57
14597	**Motorola**	**MC14597BA**	★ **1126**
			831-31
			1449-128
		MC14597BC	★ **1126**
			831-32
			1449-129
14598	**Motorola**	**MC14598BA**	★ **1126**
			830-167
			1449-130
		MC14598BC	★ **1126**
			830-168
			1449-131
14599	**Motorola**	**MC14599BA**	★ **1126**
			830-165
			1450-1
		MC14599BC	★ **1126**
			830-166
			1450-2
145K5	National	LM145K5	3390-64
			3390-86
146	Exar	XR146	3334-66
			3353-22
	Intersil	**DG146A**	★ **3196**
			2825-17
		DG146B	★ **3196**
			2825-20
	National	LM146	3334-72
	SGS	L146	3394-44
	Siliconix	**DG146A**	★ **3223**
			2825-18
		DG146B	★ **3223**
			2825-21
	Telefunken	UAA146	3404-93
	ThomsonCSF	LM146	3371-30
1460	TeledyneP	1460	3354-16
		1460-HR	3354-26
1461	TeledyneP	1461	3330-93
		1461-HR	3342-27
1463	Sanyo	LA1463	3326-132
	TeledyneP	1463	3346-41
		1463-HR	3346-40
1464	Sanyo	LA1464	3326-133
	TeledyneP	1464	3352-26
		1464-HR	3352-25
1466	**Motorola**	**MC1466**	★ **3627**
			3394-46
1467	TeledyneP	1467	3337-27
		1467-HR	3337-28
1468	Exar	XR1468	3392-82
	Motorola	**MC1468**	★ **3627**
			3392-77
			3395-41
			3395-43
	SiliconG	SG1468	3392-79
			3395-45
		SG1468T	3395-47
146805	Motorola	M146805	¶ 363-9
			¶ 370-2
		MC146805	★ **1668**
146805E2			
	Motorola	MC146805E2	1454-69
			¶ 364-2
			¶ 367-19
			¶ 374-6
			1423-4
146805E3			
	Motorola	MC146805E3	1454-55
			1423-5
146805F2			
	Motorola	MC146805F2	1454-12
			¶ 364-2
			¶ 369-6
			1423-6
146805G2			
	Motorola	MC146805G2	1454-13
			¶ 364-2
			¶ 364-10
			1423-7
146805G2L1			
	Motorola	MC146805G2L1	
			¶ 380-14
146805H2			
	Motorola	MC146805H2	1423-8
146818	**Motorola**	**MC146818**	★ **1663**
			1454-146
			¶ 371-8
		MC146818A	★ **1663**
			1454-147
146823	**Motorola**	**MC146823**	★ **1663**
			1455-52
			¶ 371-8
1468705F2			
	Motorola	**MC1468705F2**	★ **1668**
			1454-22
			1423-9
1468705F5			
	Motorola	MC1468705F5	1423-10
1468705G2			
	Motorola	**MC1468705G2**	★ **1668**
			1454-11
			¶ 375-9
			1423-11
1469	Siemens	TBB1469	3322-90
1470	Sanyo	LB1470	2874-29
	SGS	TDA1470	3326-139
		TDA1470A	3326-140
	TI	TMS1470	1413-31
1471	Plessey	MJ1471	3379-97
1472	**Motorola**	**MC1472**	★ **3212**
			2897-59
	Plessey	MJ1472	3380-89
	Western	PT1472B	2901-23
		PT1472B-01	2901-24
1473	NEC	μPC1473	3307-76
			3322-162
	Plessey	MJ1473	3380-90
	Sanyo	LB1473	3322-70
1474	NEC	μPC1474	3307-77
			3322-163
	Plessey	MJ1474	3380-80
1475	NEC	μPC1475	3307-78
			3322-164
1476	NEC	μPC1476	3324-57
1477	NEC	μPC1477	3325-96
1478	NEC	μPC1478	3326-13
148	Fairchild	μA148M	3371-33
	Motorola	**LM148**	★ **3618**
			3371-34
	PMI	**PM-148**	★ **3636**
	Raytheon	LM148	3371-35
	TI	**LM148**	★ **719**
			3371-36
	ThomsonCSF	LM148	3371-31
1480	NEC	μPC1480CA	3326-92
	TeledyneP	1480	3330-121
		1480-HR	3346-180
1481	NEC	μPC1481	3325-161
1482	Western	PT1482B	2901-30
		PT1482B-01	2901-31
1487	**CTI**	**CT1487**	★ **601**
			2901-39

¶ Indicates page number in Application Note Directory.
★ Indicates additional data is provided on the page noted.

Base Number	Source	Device	Page-Line
1488	**Exar**	**XR1488**	**★3560**
			2881-40
	Fairchild	μA1488C	2881-41
	Intech	MC1488	¶ 396-7
	Motorola	**MC1488**	**★3211**
			★3212
			2881-43
			¶ 398-11
	National	DS1488	2881-44
			¶ 395-5
	Samsung	**MC1488**	**★3220**
			2881-45
	SGS	MC1488	2881-46
	Signetics	**MC1488**	**★3720**
			2881-47
	Ziatech	ZT 1488A	2031-12
1489	**Exar**	**XR1489A**	**★3561**
			2885-27
	Fairchild	μA1489AC	2885-28
		μA1489C	2885-19
	Intech	MC1489	¶ 396-7
	Motorola	**MC1489**	**★3211**
			★3212
			2885-20
			¶ 398-11
		MC1489A	**★3211**
			★3212
			2885-29
	National	DS1489	2885-21
			¶ 395-5
		DS1489A	2885-30
	Samsung	**MC1489**	**★3220**
			2885-22
		MC1489A	**★3220**
			2885-31
	SGS	MC1489	2885-23
	Signetics	**MC1489**	**★3720**
			★3726
			2885-24
		MC1489A	**★3720**
			★3726
			2885-32
	SiliconG	SG1489A	2885-33
149	National	LM149	3371-37
	SGS	L149	3316-219
1494	Motorola	MC1494	3400-132
1495	Motorola	MC1495	3400-133
	SiliconG	SG1495	3400-137
1496	Motorola	MC1496	3398-74
	National	LM1496	3398-76
	Signetics	**MC1496**	**★3722**
			3398-82
	SiliconG	SG1496	3398-86
1498	Panasonic	MN1498	1450-17
			¶ 380-8
			1411-9
1499	Panasonic	MN1499	1450-15
			¶ 380-8
			1411-10
		MN1499A	1450-16
			1411-11
14A05	Lambda	LAS14A05	3385-19
14A12	Lambda	LAS14A12	3387-83
14A15	Lambda	LAS14A15	3388-75
14H4	Lattice	RAL14H4-15	4467-42
		RAL14H4-15L	4467-43
		RAL14H4-25	4468-4
		RAL14H4-25L	4468-5
		RAL14H4-35	4468-92
		RAL14H4-35L	4468-93
	MMI	HAL14H4-2C	4476-13
		HAL14H4-2M	4476-26
		HAL14H4C	4475-41
14H4	MMI	HAL14H4M	4475-122
		PAL14H4-2C	**★ 689**
			★4681
			4472-104
		PAL14H4-2M	**★ 689**
			★4681
			4473-9
		PAL14H4C	**★ 689**
			★4681
			4471-54
		PAL14H4M	**★ 689**
			★4681
			4472-47
		ZHAL14H4C	4475-59
	National	PAL14H4AC	4470-40
		PAL14H4AM	4471-9
		PAL14H4C	4471-82
		PAL14H4M	4472-63
	Zytrex	ZX-CAL14H4	4475-89
14H8	Lattice	RAL14H8-15	4467-44
		RAL14H8-15L	4467-45
		RAL14H8-25	4468-6
		RAL14H8-25L	4468-7
		RAL14H8-35	4468-94
		RAL14H8-35L	4468-95
	TI	TIBPAL14H8	4469-35
14L4	Lattice	RAL14L4-15	4467-46
		RAL14L4-15L	4467-47
		RAL14L4-25	4468-8
		RAL14L4-25L	4468-9
		RAL14L4-35	4468-96
		RAL14L4-35L	4468-97
	MMI	HAL14L4-2C	4476-14
		HAL14L4-2M	4476-27
		HAL14L4C	4475-42
		HAL14L4M	4475-123
		PAL14L4-2C	**★ 689**
			★4681
			4472-105
		PAL14L4-2M	**★ 689**
			★4681
			4473-10
		PAL14L4C	**★ 689**
			★4681
			4471-55
		PAL14L4M	**★ 689**
			★4681
			4472-48
		ZHAL14L4C	4475-60
	National	PAL14L4AM	4471-10
		PAL14L4C	4471-83
		PAL14L4M	4472-64
	Zytrex	ZX-CAL14L4	4475-90
14L8	Lattice	RAL14L8-15	4467-48
		RAL14L8-15L	4467-49
		RAL14L8-25	4468-10
		RAL14L8-25L	4468-11
		RAL14L8-35	4468-98
		RAL14L8-35L	4468-99
	MMI	HAL14L8C	4475-98
		HAL14L8M	4475-124
		PAL14L8C	**★4682**
			4472-20
		PAL14L8M	**★4682**
			4472-49
	National	PAL14L8C	4472-34
		PAL14L8M	4472-35
	TI	TIBPAL14L8	4469-36
14LP00	**Signetics**	**ACE14LP00**	**★4747**
			4455-30
14P4	Lattice	RAL14P4-15	4467-50
		RAL14P4-15L	4467-51
		RAL14P4-25	4468-12
		RAL14P4-25L	4468-13
		RAL14P4-35	4468-100
		RAL14P4-35L	4468-101
	MMI	ZHAL14P4C	4475-61
	Panatech	**14P4**	**★4736**
			4473-35
		14P4AP-55	**★4736**
			4472-91
		14P4BP-35	**★4736**
			4471-93
	VTI	**VP14P4**	**★4807**
			4474-41
14P8	Lattice	RAL14P8-15	4467-52
		RAL14P8-15L	4467-53
		RAL14P8-25	4468-14
		RAL14P8-25L	4468-15
		RAL14P8-35	4468-102
		RAL14P8-35L	4468-103
	TI	TIBPAL14P8	4469-37
14T00	**Signetics**	**ACE14T00**	**★4747**
			4455-29
14X41	Reticon	RA14X41	3400-3
15	**Burr-Brown**	**VFC15**	**★3148**
	CIC	MSA-15	4462-25
	Datricon	ACS15/65	2017-24
	GI	LA15	4445-30
	Interdesign	ULA15ARA	4443-26
		ULA15ARB	4443-27
		ULA15ARC	4443-28
		ULA15ARD	4443-29
		ULA15DS	4443-25
	Lambda	LAS15ACB	3387-103
		LAS15CB	3387-104
		LAS15U	3392-113
	LinearTech	OP-15A	3342-17
		OP-15B	3344-32
		OP-15C	3346-185
		OP-15E	3342-16
		OP-15F	3344-33
		OP-15G	3346-184
	MCE	D15A	4450-38
	PMI	OP-15	¶ 393-12
		OP-15A	**★3636**
			3342-18
		OP-15B	**★3636**
			3344-34
		OP-15C	**★3636**
			3346-186
		OP-15E	**★3636**
			3342-19
		OP-15F	**★3636**
			3344-35
		OP-15G	**★3636**
			3346-187
	Supertex	ED-15	¶ 400-1
		ED15	838-7
			¶ 399-16
150	ArrayTech	DHS150	4439-16
	Fairchild	μA150	3393-11
	IntMicCir	Interchip 150	4449-26
	IPS	**IP150**	**★3599**
			3393-14
		IP150A	**★3599**
			3393-15
	LinearTech	LM150	3393-20
		LM150A	3393-21
	Motorola	**LM150**	**★3625**
			3393-24
	National	AF150	3398-32
		LM150	3393-27
			¶ 428-1
	SiliconG	SG150	3393-30
		SG150A	3393-31
	Teletek	Z-150MB	2037-4
	Unitrode	UC150	3393-36
1500	AMD	AM1500C	3314-60
		AM1500L	3314-7
		AM1500M	3314-8
	AMCC	**Q1500A**	**★4602**
			4439-4
		QH1500A	**★4602**
			4439-5
	ArrayTech	DHS1500	4439-24
		HCD1500	4439-25
	Calmos	CA1500	4441-15
	Motorola	**MC1500-10**	**★3628**
			3403-44
		MC1500-2	**★3628**
			3402-59
		MC1500-5	**★3628**
			3402-109
		MC1500-6	**★3628**
			3402-142
		MC1500A	**★3628**
	National	MCA1500M	¶ 443-8
	S-MOS	SED1500	2874-104
1500	Sanyo	LB1500	3324-111
	TLSI	TA-1500	4456-30
15000	Fujitsu	UM15000	4445-14
1500A1	Vatic	M1500A1	4458-1
1501	SiliconG	SG1501	¶ 427-19
		SG1501A	3392-89
	TI	TCM1501A	3382-41
			¶ 411-9
1502	SiliconG	SG1502	3395-49
	Western	FR1502-10	3809-33
		FR1502-11	3809-30
1503	**Motorola**	**MC1503**	**★3628**
			3402-60
		MC1503A	**★3628**
			3402-61
	SiliconG	SG1503	3402-74
1504	Motorola	MC1504-10	3403-45
		MC1504-5	3402-110
		MC1504-6	3402-143
		MC1504A-10	3403-46
1505	Lambda	LAS1505	3384-101
			¶ 427-5
	TI	TCM1505A	¶ 411-9
1506	AMD	AM1506	3854-1
	Lambda	LAS1506	3385-97
	Motorola	**MC1506**	**★3630**
			2849-42
	Signetics	**TDA1506**	**★3730**
			2895-136
	TI	TCM1506A	3382-42
			¶ 411-9
1507	AMD	AM1507	3854-2
	NEC	μPC1507	3327-32
			3327-126
1508	AMD	AM1508-8	2852-53
		SSS1508A-8	2852-45
	AD	AD1508-8	2852-47
		AD1508-9	2851-30
	Fairchild	DAC1508	2853-2
	Lambda	LAS1508	3386-41
	Motorola	**MC1508-8**	**★3630**
			2853-4
	National	MC1508-8	2853-6
	PMI	DAC-1508A-8	2852-49
	Signetics	MC1508-8	2853-8
		TDA1508	3324-12
151	Fairchild	CCD151	3400-19
			3400-66
	Intersil	**DG151A**	**★3196**
			2822-97
		DG151B	**★3196**
			2822-100
	National	AF151	3398-33
	SGS	M151	3320-137
	Signetics	**PLS151**	**★4154**
			★4155
			★4156
			4473-48
1510	Lambda	LAS1510	3386-102
	Signetics	**TDA1510**	**★3729**
			3318-166
	ThomsonCSF	TEA1510	3404-87
	Western	WD1510-00	3809-122
		WD1510-01	3809-123
		WD1510-02	3810-61
1511	ThomsonCSF	TEA1511	3404-94
			3405-16
1512	AppBusComp	AI-1512	2031-27
	Lambda	LAS1512	3387-37
	MicronTech	MT1512-12	3830-33
		MT1512-15	3830-34
		MT1512-20	3830-35
	Signetics	**TDA1512**	**★3729**
			3318-139

(Continued)

Arranged alphanumerically from left to right.

Base Number	Source	Device	Page-Line
1512	TI	TCM1512A	3382-43 ¶ 411-9
	ThomsonCSF	TEA1512	890-24 2894-4
1514	Motorola	MC1514	3313-46
	National	LM1514	3313-45
	Supertex	HV1514	2831-50
1515	Lambda	LAS1515	3388-37
	Sanyo	LB1515	3324-112
	Signetics	**TDA1515**	**★3709** **★3729** 3318-167
1516	**AD**	**ADSP-1516**	**★1007**
	Supertex	HV1516	2831-52
	Weitek	WTL1516	891-103
1517	**AD**	**ADSP-1517**	**★1007**
1518	Lambda	LAS1518	3388-126
152	**Intersil**	**DG152A**	**★3196** 2823-6
1520	Lambda	LAS1520	3389-36
	Signetics	**TDA1520**	**★3729** 3318-140
	TI	TCM1520A	3381-17 3382-44 ¶ 411-9
1521	Plessey	SL1521	3308-53 ¶ 409-13 ¶ 415-19
1522	Plessey	SL1522	3308-54
	Signetics	**TDA1522**	**★3727** 3319-61
1523	Plessey	SL1523	3308-55
	RCA	CA1523	3396-51
1524	Cherry	CS1524	3395-66
		CS1524A	3395-67
	Exar	**XR1524**	**★3558** 3395-89
	IPS	**IP1524**	**★3599** 3395-115
		IP1524B	**★3599** 3395-116
	Lambda	LAS1524	3389-88
	LinearTech	LT1524	3395-163
		SG1524	3396-1
	National	LM1524	3396-38
	Plessey	SL1524	3308-56
	RCA	CA1524	3396-52 ¶ 421-17
		CA1524E	¶ 422-4 ¶ 422-5
	SGS	SG1524A	3396-58
		UD1524A	3396-67
	Signetics	**TDA1524**	**★3727** 3316-124 3326-110
	SiliconG	SG1524	3396-88 ¶ 422-1 ¶ 422-3 ¶ 427-15
		SG1524B	3396-89 ¶ 426-15
	TI	**SG1524**	**★ 720** 3396-130
	Unitrode	SG1524	3397-41
		UC1524	**★3739** 3397-42
		UC1524/883B	**★3739** 3397-43
		UC1524A	**★3739** **★3739** 3397-44 ¶ 426-10
		UC1524A/883B	**★3739** 3397-45
1525	Cherry	CS1525A	3395-68
	Exar	**XR1525A**	**★3559** 3395-90
	IPS	**IP1525A**	**★3599** 3395-117
	LinearTech	LT1525A	3395-164
		SG1525A	3396-2
	Motorola	**SG1525A**	**★3626** 3396-22
	Plessey	SL1525	3308-57
	SiliconG	SG1525	¶ 422-2
		SG1525/1527	¶ 426-8
		SG1525A	3396-90
	Unitrode	U1525A	¶ 425-6
		UC1525A	**★3739** 3397-46
		UC1525A/883B	3397-47
1526	**IPS**	**IP1526**	**★3599** 3395-118
		IP1526A	**★3599** 3395-119
	LinearTech	LT1526	3395-165
	Motorola	**SG1526**	**★3626** 3396-23
	Signetics	**SG1526A**	**★3716** **★3730** 3396-84
	SiliconG	SG1526	3396-91 ¶ 426-8
		SG1526A	3396-92
	Unitrode	UC1526/883B	3397-48
		UC1526A	**★3739** 3397-49
1527	Cherry	CS1527A	3395-69
	Exar	XR1527A	3395-91
	IPS	**IP1527**	**★3599**
	LinearTech	LT1527A	3395-166
		SG1527A	3396-3
	Motorola	**SG1527A**	**★3626** 3396-24
	SGS	SG1527A	3396-59
	SiliconG	SG1527	¶ 422-2
		SG1527A	3396-93
	Unitrode	U1527A	¶ 425-6
		UC1527A	**★3739** 3397-50
		UC1527A/883B	3397-51
153	**Intersil**	**DG153A**	**★3196** 2827-27
		DG153B	**★3196** 2827-29
	Signetics	**PLC153**	**★4154**
		PLHS153	**★4154** 4473-84
		PLMC153	**★4154** 4474-2
		PLS153	**★4154** **★4157** 4473-85 ¶ 362-1
		PLS153A	**★4154** **★4157** 4474-1
	SiliconG	SG153-05	3385-44
		SG153-12	3387-88
		SG153-15	3388-80
1531	Plessey	SL1531	3308-49
1532	Plessey	SL1532	3308-50
	SiliconG	SG1532	3394-22
1533	Signetics	TDA1533	3327-154
1534	Signetics	S1534	890-89
		SA1534	890-88
		SAB1534	**★1173** 848-73
		SAF1534	**★1173** 848-75
			(Continued)
1534	**Signetics**	**TDA1534**	**★3688** **★3725** **★3733** 2846-30
1535	**Signetics**	**TDA1535**	**★3725**
	Unitrode	UC1535	3397-52
1536	**Motorola**	**MC1536**	**★3616** 3331-82 3352-37
		MC1536R	**★3616** 3395-4
	National	LM1536	3331-87 3352-38
	SiliconG	SG1536	3331-88 3352-39
1537	**Motorola**	**MC1537**	**★3617** 3366-26
	Raytheon	RM1537	3366-8
1538	Motorola	MC1538	3306-38
1539	**Motorola**	**MC1539**	**★3615** 3346-227
154	**Intersil**	**DG154A**	**★3196** 2827-48
		DG154B	**★3196** 2827-68
1540	**Signetics**	**TDA1540**	**★3691** **★3725** **★3733** 2870-28
1541	Panasonic	MN1541	1450-18 1411-12
1542	Panasonic	MN1542	1450-19 1411-13
	SiliconG	SG1542	3401-48
1543	**Exar**	**XR1543**	**★3559** 3401-88
	SiliconG	SG1543	3401-91 ¶ 425-15 ¶ 426.9
	Unitrode	**UC1543**	**★3740** 3401-97
		UC1543/883B	**★3740** 3401-98
1544	Panasonic	MN1544	1450-20 1411-14
	SiliconG	SG1544	3401-92
	Unitrode	**UC1544**	**★3740** 3401-99
		UC1544/883B	**★3740** 3401-100
1545	Motorola	MC1545	3307-105 ¶ 410-1
1548	SiliconG	SG1548	¶ 424-3
1549	SiliconG	SG1549	3398-116 ¶ 426-4
155	LinearTech	LF155	3350-7
		LF155A	3346-89
	MicroPwr	**MP155**	**★3607** 3351-38
		MP155A	**★3607** 3345-39
	National	LF155	3351-49
		LF155A	3345-40
	PMI	**PM-155**	**★3636** **★3639** 3330-38 3342-28
		PM-155A	**★3636** **★3639** 3345-42
	Signetics	**PLS155**	**★4154**
			(Continued)
155	**Signetics**	**PLS155**	**★4158**
	ThomsonCSF	LF155	3351-47
		LF155A	3345-38
1550	Plessey	SL1550	3308-4
	Sanyo	LB1550	3324-113
1553	SMC	COM1553	¶ 380-6
		COM1553A	2901-54
		COM1553B	2901-55 ¶ 380-6
15530	**Citel**	**CT15530**	**★3155**
	Harris	15530	¶ 400-3
		HD15530	¶ 412-1
		HD15530-2	**★1625** **★1631** **★4029** **★4654** 837-56 **★1625** **★1631** **★4029** **★4654** 2900-89
		HD15530-9	**★1625** **★1631** **★4029** **★4654** 837-57 **★1625** **★1631** **★4029** **★4654** 2900-90
		HS15530RH	**★ 676** **★ 682** 2900-88 **★ 676** **★ 682** 1458-25
15531	Harris	HD15531	¶ 400-3 ¶ 412-1
		HD15531-2	**★1625** 837-58 2900-91
		HD15531-9	**★1625** 837-59 2900-92
		HD15531B	**★1625** 2900-93
1554	Motorola	MC1554	3318-32
1555	**CTI**	**CT1555**	**★ 601** 1466-58
	Motorola	MC1555	3383-40
	NEC	μPC1555	3383-42
1556	**Motorola**	**MC1556**	**★3616** 3350-12
1558	Fairchild	μA1558M	3366-9
	Motorola	**MC1558**	**★3617** 3366-11
		MC1558S	**★3617** 3365-46
	National	LM1558	3366-13
	Raytheon	RM1558	3366-16
	RCA	**CA1558**	**★3672** 3366-18
	SGS	MC1558	3366-20
	Signetics	**MC1558**	**★3729** 3366-21
	TI	**MC1558**	**★ 718** 3366-23
1559	**Signetics**	**TDA1559**	**★3730** 2895-137
156	**Burr-Brown**	**OPA156A**	**★3149** **★3150** 3345-47
	LinearTech	LF156	3350-8
		LF156A	3346-91
	MicroPwr	**MP156**	**★3607**
			(Continued)

¶ Indicates page number in Application Note Directory.
★ Indicates additional data is provided on the page noted.

Base Number	Source	Device	Page-Line
156	MicroPwr	MP156	3351-39
		MP156A	**★3607**
			3345-46
	National	LF156	3352-3
		LF156A	3345-43
	PMI	**PM-156**	**★3636**
			★3639
			3352-6
		PM-156A	**★3636**
			★3639
			3345-45
	SGS	LS156	3381-42
	ThomsonCSF	LF156	3352-1
		LF156A	3345-49
1560	**CTI**	**CT1560**	**★ 601**
			1468-17
1561	**CTI**	**CT1561**	**★ 601**
			1468-18
1562	**CTI**	**CT1562**	**★ 601**
			1468-19
	Panasonic	MN1562	1450-21
			1411-15
1563	**CTI**	**CT1563**	**★ 601**
			1468-20
1564	Panasonic	MN1564	1450-22
			1411-16
1566	**Motorola**	**MC1566**	**★3627**
			3394-47
1568	Exar	XR1568	3392-83
	Motorola	**MC1568**	**★3627**
			3392-78
			3395-42
			3395-44
	SiliconG	SG1568	3392-80
			3395-46
		SG1568T	3395-48
157	**MicroPwr**	**MP157**	**★3607**
			3351-40
		MP157A	**★3607**
			3345-34
	National	LF157	3351-42
		LF157A	3345-35
	PMI	**PM-157**	**★3636**
			3351-45
		PM-157A	**★3636**
			3345-37
	Signetics	**PLS157**	**★4154**
			★4159
			4474-71
			¶ 419-7
	ThomsonCSF	LF157	3351-46
		LF157A	3345-50
1571	**Signetics**	**TDA1571**	**★3727**
			3321-123
1574	**Signetics**	**TDA1574**	**★3727**
			3321-124
1576	**Signetics**	**TDA1576**	**★3727**
			3321-142
1578	**Signetics**	**TDA1578A**	**★3727**
			3322-136
158	**Motorola**	**LM158**	**★3617**
			3334-115
			3365-30
	National	LM158	3334-118
			3365-31
		LM158A	3334-131
			(Continued)
158	**RCA**	**CA158**	**★3672**
			3334-122
			3365-33
		CA158A	**★3672**
			3363-5
	SGS	LM158	3365-35
		LM158A	3363-6
	Signetics	**LM158**	**★3729**
			3334-124
			3365-36
	TI	**LM158**	**★ 718**
			3334-128
			3365-39
	ThomsonCSF	LM158	3365-40
1580	Signetics	TDA 1580	3321-111
1589	**CTI**	**CT1589**	**★ 601**
			2901-40
159	National	LM159	3357-183
	SGS	LS159	3309-47
	Signetics	**PLS159**	**★4154**
			★4160
			4474-68
			¶ 362-2
1590	Motorola	MC1590	3306-54
		MC1590G	¶ 409-9
1591	Panasonic	MN1591	1450-24
1594	Motorola	MC1594	3400-134
1595	Motorola	MC1595	3400-135
	SiliconG	SG1595	3400-138
1596	Motorola	MC1596	3398-75
	National	LM1596	3398-77
	Signetics	MC1596	3398-83
		TDA1596	**★3727**
	SiliconG	SG1596	3398-87
1599	Panasonic	MN1599	1450-23
15A05	Lambda	LAS15A05	3384-102
15A06	Lambda	LAS15A06	3385-98
15A08	Lambda	LAS15A08	3386-42
15A10	Lambda	LAS15A10	3386-103
15A12	Lambda	LAS15A12	3387-38
15A15	Lambda	LAS15A15	3388-38
15A20	Lambda	LAS15A20	3389-37
15A24	Lambda	LAS15A24	3389-89
15G008	**Toshiba**	**TC15G008**	**★4799**
			4456-48
15G014	**Toshiba**	**TC15G014**	**★4799**
			4456-50
15G022	**Toshiba**	**TC15G022**	**★4799**
			4456-52
15G032	**Toshiba**	**TC15G032**	**★4799**
			4457-1
15G042	**Toshiba**	**TC15G042**	**★4799**
			4457-3
15G060	**Toshiba**	**TC15G060**	**★4799**
			4457-5
15R4	**MMI**	**PAL15R4**	**★4681**
16	**Burr-Brown**	**MPC16S**	**★3149**
			2831-88
	Cromemco	16KZ	2038-37
	Dasoft	Dasoft-16	4879-3
		Dasoft 16	4914-1
	Datel	**DAC-HP16BMC**	**★3160**
			★3162
			2872-39
		DAC-HP16BMC-1	
			★3160
			(Continued)
16	**Datel**	**DAC-HP16BMC-1**	
			★3162
			2872-40
		DAC-HP16BMM	**★3160**
			★3162
			2872-41
		DAC-HP16BMM-1	
			★3160
			★3162
			2872-42
		DAC-HP16DGC	**★3160**
			★3162
			2873-13
		DAC-HP16DMC	**★3160**
			★3162
			2873-14
		DAC-HP16DMM	**★3160**
			★3162
			2873-15
		HDAS-16MC	**★3160**
			★3163
			2840-18
			★3160
			★3163
			3399-50
		HDAS-16MM	**★3160**
			★3163
			3399-51
	Fairchild	GLOW-16	2025-21
		SPARK-16	2025-28
	GI	SPR-16	¶ 365-5
	Harris	HI-DAC16	¶ 386-10
		HIDAC16B	**★3194**
			2871-36
		HIDAC16C	**★3194**
			2872-3
	IndComp	CMC-16/8	2037-10
	InrVision	16KZ	2029-28
	IntSolutions	VME-ICP16	2044-46
	Interdesign	ULA16RA	4443-30
		ULA16RB	4443-31
		ULA16RC	4443-32
		ULA16RD	4443-33
	IMI	MPY-16	843-68
		MPY-16IMI	807-148
	Lambda	LAS16ACB	3387-105
		LAS16CB	3387-106
			3387-107
		LAS16U	3392-114
	LinearTech	OP-16A	3342-20
		OP-16B	3344-36
		OP-16C	3346-188
		OP-16E	3342-21
		OP-16F	3344-37
		OP-16G	3346-189
	LogicDev	LMU16	843-69
		LMU16C	807-96
		LMU16M	807-143
	MicroTech	CCD16DMUX	3398-45
		CCD16MUX	3398-44
	MRCSys	MBKITB16CC	2037-27
		MBKOTB16RR	2037-28
	National	IMP-16	¶ 364-12
			¶ 365-1
			¶ 366-2
			¶ 367-9
			¶ 373-17
			¶ 374-11
			¶ 379-9
		IMP-16C	¶ 378-12
			¶ 379-10
	Onset	KDT-16	2030-10
	PMI	MUX-16	¶ 401-3
		MUX-16A	**★3639**
			2831-98
		MUX-16B	**★3639**
			2831-100
		MUX-16E	**★3639**
			2831-99
		MUX-16F	**★3639**
			2831-101
		OP-16	¶ 393-12
		OP-16A	**★3636**
			3342-22
		OP-16B	**★3636**
			3344-38
			(Continued)
16	**PMI**	**OP-16C**	**★3636**
			3346-190
		OP-16E	**★3636**
			3342-23
		OP-16F	**★3636**
			3344-39
		OP-16G	**★3636**
			3346-191
	TI	TBPL16X-35	3818-100
		TBPL16X-45	3818-119
160	DY-4	DSTD-160/360	2025-36
	National	LM160	3313-1
1600	**AMCC**	**QM1600S**	**★4603**
			4439-8
	Burr-Brown	**DAC1600J-V**	**★3147**
			2872-50
		DAC1600K-V	**★3147**
			2872-18
	CalDevices	**DLM1600**	**★4605**
			4440-31
	Fairchild	**F1600-45**	**★4011**
			3847-5
		F1600-55	**★4011**
			3847-22
		F1600-70	**★4011**
			3847-43
		F1600M-55	**★4011**
			3847-23
		F1600M-70	**★4011**
			3847-44
	Fujitsu	**C1600AVB**	**★4624**
			4444-51
	Inmos	**IMS1600-35**	**★ 686**
			★4043
			3846-102
		IMS1600-45	**★ 686**
			★4043
			3847-19
		IMS1600-55	**★ 686**
			★4043
			3847-38
		IMS1600-55M	**★ 686**
			★4043
			3847-39
		IMS1600-70	**★ 686**
			★4043
			3847-51
		IMS1600-70M	**★ 686**
			★4043
			3847-52
	Ironics	IV-1600	2029-11
		IV-1600-MMx	2045-19
	National	LX1600	¶ 429-6
		LX1600A	¶ 429-7
	Plessey	SL1600	
		Series	¶ 414-17
			¶ 415-1
			¶ 415-14
	TI	TMS1600	1413-32
	ThomsonCSF	ESM1600	2887-13
	Western	MP1600	1437-23
16000	Fujitsu	UH16000	4445-15
	National	DB16000	2023-34
16008	National	NS16008	1464-83
			1464-84
1601	**CTI**	**CT1601**	**★ 601**
			1468-21
	Fairchild	**F1601-55**	**★4011**
			3847-24
		F1601-70	**★4011**
			3847-45
	Ironics	IV-1601	2029-23
	National	LX1601A	¶ 429-7
	Sanyo	LB1601	3404-103
16016	National	NS16016	1462-86
			1464-81
			1435-31
1602	**CTI**	**CT1602**	**★ 601**
			1468-22
	GouldAMI	S1602	2901-87
	Ironics	IV-1602	2027-28
	National	LX1602A	¶ 429-1
			¶ 429-7
			¶ 429-19
			(Continued)

Arranged alphanumerically from left to right.

Base Number	Source	Device	Page-Line
1602	ThomsonCSF	ESM1602	2887-14
	Western	TR1602	¶ 394-16
1603	**CTI**	**CT1603**	★ **601**
			1468-23
	National	DS1603	2886-32
			2899-19
16032	Fairchild	F16032	1463-100
			1437-38
	National	NS16032	1464-85
		NS16032-10	1439-5
		NS16032-4	1439-6
		NS16032-6	1463-101
			1439-7
1604	**CTI**	**CT1604**	★ **601**
			1468-24
16040	National	HPC16040	1435-30
1605	**CTI**	**CT1605**	★ **601**
			1468-25
	Fairchild	SH1605A	3395-102
	ITT	TDD1605	3384-37
	Lambda	LAS1605	3385-2
	National	LH1605	3396-36
			¶ 427-10
		LH1605C	3396-37
1606	**CTI**	**CT1606**	★ **601**
			1468-26
	Datel	**MV-1606**	★ **3163**
			2831-57
		MX-1606	★ **3163**
			2831-89
	ITT	TDD1606	3385-78
1607	ThomsonCSF	TDE1607	2896-83
1608	**CTI**	**CT1608**	★ **601**
			1466-59
	ITT	TDD1608	3386-19
	Lambda	LAS1608	3386-63
16081	National	NS16081	1463-102
16082	National	NS16082	1463-105
161	**Intersil**	**DG161A**	★ **3196**
			2825-19
	National	LM161	3312-36
	Signetics	**PLS161**	★ **4154**
			4473-61
	Siliconix	L161	¶ 414-8
		L161A	★ **3248**
			3315-28
		L161B	★ **3248**
			3315-26
		L161C	★ **3248**
			3315-27
1610	**CTI**	**CT1610**	★ **601**
			1468-27
	HiLevel	DS1610	1815-2
	ITT	TDD1610	3386-96
	Unitrode	UC1610	3400-100
1611	**CTI**	**CT1611**	★ **601**
			1458-36
	Ironics	IV-1611-1MB	2045-29
		IV-1611-256K	2045-44
		IV-1611-2MB	2045-33
		IV-1611-512K	2045-46
	National	DS1611	2897-20
1612	**CTI**	**CT1612**	★ **601**
			1468-28
	Ironics	IV-1612-01	2045-26
	ITT	TDD1612	3386-124
	Lambda	LAS1612	3387-71
			¶ 392-2
	National	DS1612	2897-61
1613	National	DS1613	2897-122
1614	National	DS1614	2897-91
			2897-92
	Supertex	HV1614	2830-97
16149	National	DS16149	864-115
			2893-11
1615	**CTI**	**CT1615**	★ **601**
			1468-29
	ITT	TDD1615	3387-126
	Lambda	LAS1615	3388-61
1616	**Datel**	**MX-1616**	★ **3159**
			★ **3163**
			2831-86
		MX-1616M	★ **3159**
			★ **3163**
			2831-87
	Dense-Pac	**DPS1616**	★ **4008**
			3845-119
	Supertex	HV1616	2830-100
	VTI	**VL16160**	★ **1751**
			★ **1752**
			★ **1758**
			1465-104
1617	**CTI**	**CT1617**	★ **601**
			1468-30
16177	National	DS16177	2892-129
16179	National	DS16179	864-116
			2893-12
1618	ITT	TDD1618	3388-99
	TI	**THCTPAL1618**	★ **4797**
162	**Intersil**	**DG162A**	★ **3196**
			2825-40
	Signetics	**PLS162**	★ **4154**
			4469-31
1620	**Inmos**	**IMS1620-45**	★ **686**
			★ **4044**
			3845-26
		IMS1620-55	★ **686**
			★ **4044**
			3845-51
		IMS1620-70	★ **686**
			★ **4044**
			3845-75
	Ironics	IV-1620	2043-39
16201	National	NS16201	1463-106
		NS16201-6	1463-103
16202	National	NS16202	1463-104
16203	National	NS16203	1464-95
16204	National	NS16204	1462-87
			1464-92
1621	Ironics	IV-1621	2044-34
1622	Ironics	IV-1622-01	2043-48
1623	Interdesign	MOF1623B	2887-56
	Plessey	SL1623	¶ 414-15
1624	**Inmos**	**IMS1624-45**	★ **686**
			★ **4044**
			3845-27
		IMS1624-55	★ **686**
			★ **4044**
			3845-52
		IMS1624-70	★ **686**
			★ **4044**
			3845-76
	Ironics	IV-1624	2027-26
			2044-26
		IV-1624-SI01	2044-38
	ITT	TDD1624	3389-62
1625	Ironics	IV-1625	2044-32
1626	Plessey	SL1626	¶ 414-15
1627	SiliconG	SG1627	2894-32
			¶ 426-3
1628	National	DS1628	2893-38
1629	SiliconG	SG1629	2828-103
			2895-56
			¶ 426-3
			3399-78
163	**Intersil**	**DG163A**	★ **3196**
			2827-85
		DG163B	★ **3196**
			2827-87
	National	LM163	3339-1
		LM163A	3306-83
			3337-40
	Signetics	**PLS163**	★ **4154**
			4469-30
1630	National	DS1630	808-153
1631	National	DS1631	2897-17
1632	National	DS1632	2897-55
1633	National	DS1633	2897-119
1634	National	DS1634	2897-88
1635	SiliconG	SG1635	2895-109
1637	Unitrode	UC1637	2896-14
			¶ 399-11
164	**Intersil**	**DG164A**	★ **3196**
			2827-90
		DG164B	★ **3196**
			2827-94
1640	Plessey	SL1640	¶ 414-15
1641	Ironics	IV-1641-01	2044-12
	Plessey	SL1641	¶ 414-15
16413	National	NS16413	1464-93
			1464-94
16425	National	NS16425	1462-88
			1464-99
16455	National	NS16455	1464-100
16456	National	NS16456	1464-98
1647	ThomsonCSF	TDE1647	2896-82
		TDE1647A	2896-84
1648	**Motorola**	**MC1648**	★ **1131**
			850-1
			3376-10
		MC1648M	★ **1131**
			850-2
			3376-11
	National	DS1648	2892-132
	Plessey	SP1648	850-3
			¶ 415-19
16488	National	NS16488	1464-96
1649	National	DS1649	2893-17
165	MCE	MCEL165	3330-58
	National	LP165	3401-137
	Raytheon	**LP165**	★ **3667**
			3315-53
	SGS	L165	3357-85
	Siemens	FZH165B	852-104
1650	Motorola	MC1650	850-4
			¶ 358-4
	National	DS1650	2887-16
	Plessey	SP1650B	850-6
1651	Ironics	IV-1651-01	2043-45
	Motorola	MC1651	850-5
	National	DS1651	2899-26
	NEC	μPC1651	3307-158
1652	GI	PIC1652	1451-91
			1417-13
	Ironics	IV-1652	2044-28
		IV-1652-01	2044-48
	National	DS1652	2887-19
	NEC	μPC1652	3307-159
1653	Ironics	IV-1653-01	2043-36
	National	DS1653	2899-27
1654	GI	PIC1654	1451-92
			1417-14
	Motorola	**MC1654**	★ **1127**
			849-92
1655	GI	PIC1655	1451-93
		PIC1655A	1451-94
			1417-15
	NEC	μPC1655	3307-160
1656	NEC	μPC1656	3308-1
1657	GI	PIC1657	1451-95
			1417-16
1658	**Motorola**	**MC1658**	★ **1131**
			849-111
			3376-12
	NEC	μPC1658	3308-2
	Plessey	SP1658	849-112
			3376-13
1659	NEC	μPC1659	3308-3
166	Cherry	CS166	3399-95
			849-102
			¶ 358-8
	Plessey	SP1660B	849-103
16605	Hitachi	HA16605W	3327-127
1661	Motorola	MC1661	¶ 358-8
166167	**Dense-Pac**	**DPS166167**	★ **4008**
			3847-93
			3848-8
		DX166167	3847-94
16617	Hitachi	HA16617	2874-57
16619	Hitachi	HA16619	2874-58
1662	**Motorola**	**MC1662**	★ **1122**
			849-101
			¶ 358-8
16628	Hitachi	HA16628P	3327-145
16629	Hitachi	HA16629P	3327-146
1663	Motorola	MC1663	¶ 358-8
16631	Hitachi	HA16631	3308-68
			1467-80
16632	Hitachi	HA16632A	1466-64
16636	Hitachi	HA16636	3399-113
1664	**Motorola**	**MC1664**	★ **1122**
			849-100
			¶ 358-8
16640	Hitachi	HA16640	1467-87
16642	Hitachi	HA16642	1467-81
16643	Hitachi	HA16643	1466-114
1665	Motorola	MC1665	¶ 358-8
1666	Ironics	IV-1666	2043-38
	Motorola	**MC1666**	★ **1127**
			849-99
1668	**Motorola**	**MC1668**	★ **1127**
			849-110
167	**Signetics**	**PLS167**	★ **4154**
			★ **4161**
			4474-54
		PLS167A	★ **4154**
			★ **4161**
			4474-53
1670	GI	PIC1670	1451-96
			1417-17
	Motorola	**MC1670**	★ **1127**
			849-94
	Plessey	SP1670B	849-95
	SGS	TDA1670	3326-141
	TI	TMS1670	1413-33

¶ Indicates page number in Application Note Directory.
★ Indicates additional data is provided on the page noted.

Base Number	Source	Device	Page-Line
16701	Hitachi	HC16701	2898-159
1671	National	DS1671	2892-121
	SMC	COM1671	2900-11 1461-25
	Western	UC1671 •	2900-12 1461-26
1672	GI	PIC1672	1451-97 1417-18
	Ironics	IV-1672	2043-47
	Motorola	**MC1672**	★**1123** 849-108
1673	Ironics	IV-1673	2044-3
1674	Ironics	IV-1674	2045-9
	Motorola	**MC1674**	★**1123** 849-109
	National	DS1674	2893-2
1675	National	DS1675	2893-21
1677	National	DS1677	2892-130
1678	**Motorola**	**MC1678**	★**1127** 849-75
	National	DS1678	2892-133
1679	National	DS1679	2893-18
168	DY-4	DSTD-168	2017-37
	National	LM168-10	3403-48
		LM168-5	3402-113
		LM168-6	3402-136
	Signetics	**PLS168**	★**4154** ★**4162** 4474-56
		PLS168A	★**4154** ★**4162** 4474-55
16802	Hitachi	HA16802	3382-21
16803	Hitachi	HA16803	3381-34
16804	Hitachi	HA16804	3382-22
16805	Hitachi	HA16805	3382-23
1686	National	DS1686	3381-3
1687	National	DS1687	2896-95 3381-4
1688	**Motorola**	**MC1688**	★**1123** 849-107
	National	DS1688	2884-9
1689	National	DS1689	2887-46
169	**Siliconix**	**D169A**	★**3260** 2897-128
		D169C	★**3260** 2895-49
1690	**Motorola**	**MC1690**	★**1127** 849-98
	National	DS1690	2887-47
1691	National	DS1691	2881-36
	Western	WD1691	1467-91
1692	**Motorola**	**MC1692**	★**1131** 850-7 ¶ 358-4
	National	DS1692	2884-11
	Plessey	SP1692B	850-8
1694	**Motorola**	**MC1694**	★**1128** 849-113 3855-30

Base Number	Source	Device	Page-Line
1697	**Motorola**	**MC1697**	★**1128** 849-76
1699	**Motorola**	**MC1699**	★**1128** 849-77
16A05	Lambda	LAS16A05	3385-3
16A08	Lambda	LAS16A08	3386-64
16A12	Lambda	LAS16A12	3387-72
16A15	Lambda	LAS16A15	3388-62
16A18	Lambda	LAS16A18	3388-127
16A4	MMI	HAL16A4C	4475-99
		HAL16A4M	4475-125
		PAL16A4C	★ **690** ★**4681** 4472-21
		PAL16A4M	★ **690** ★**4681** 4472-50
	National	DMPAL16A4M	887-15
16AM8	**VTI**	**VT16AM8**	★**4266** 3837-42
16C032	National	NS16C032	1464-86
16C1	MMI	HAL16C1-2C	4476-15
		HAL16C1-2M	4476-28
		HAL16C1C	4475-100
		HAL16C1M	4475-126
		PAL16C1-2C	★ **689** ★**4681** 4472-106
		PAL16C1-2M	★ **689** ★**4681** 4473-11
		PAL16C1C	★ **689** ★**4681** 4472-22
		PAL16C1M	★ **689** ★**4681** 4472-51
	National	PAL16C1AC	4470-41
		PAL16C1AM	4471-11
		PAL16C1C	4471-84
		PAL16C1M	4472-65
16C450	**VTI**	**VL16C450**	★**1751** ★**1752** ★**1763** 2901-66
16C58	GI	PIC16C58	1451-98 1417-19
16DP8	**VTI**	**VT16DP8**	★**4266** ★**4268** 3837-43
		VT16DP8-70	★**4266** ★**4268** 3837-44
16E53	GI	PIC16E53	1451-99
16E57	GI	PIC16E57	1451-100
16F60	Plessey	SP16F60	849-104
16G010	**GigaBit**	**16G010**	★**1064** 851-18 3311-40
16G011	**GigaBit**	**16G011**	★**1064** 851-19 3311-41
16G020	GigaBit	16G020	851-21 3309-52
16G021	GigaBit	16G021	851-20 3309-51
16H2	Lattice	RAL16H2-15	4467-54
		RAL16H2-15L	4467-55
		RAL16H2-25	4468-16
		RAL16H2-25L	4468-17
		RAL16H2-35	4468-104
		RAL16H2-35L	4468-105
	MMI	HAL16H2-2C	4476-16
		HAL16H2-2M	4476-29
		HAL16H2C	4475-43
		HAL16H2M	4475-127
		PAL16H2-2C	★ **689** ★**4681** 4472-107
		PAL16H2-2M	★ **689** ★**4681** 4473-12
		PAL16H2C	★ **689** (Continued)

Base Number	Source	Device	Page-Line
16H2	**MMI**	**PAL16H2C**	★**4681** 4471-56
		PAL16H2M	★ **689** ★**4681** 4472-52
		ZHAL16H2C	4475-62
	National	PAL16H2AC	4470-42
		PAL16H2AM	4471-12
		PAL16H2C	4471-85
		PAL16H2M	4472-66
	Zytrex	ZX-CAL16H2	4475-91
16H4	**VTI**	**VT16H4**	★**4266** 3844-110
		VT16H4-35	★**4266** 3844-111
		VT16H4-45	★**4266** 3845-8
		VT16H4-55	★**4266** 3845-37
16H6	Lattice	RAL16H6-15	4467-56
		RAL16H6-15L	4467-57
		RAL16H6-25	4468-18
		RAL16H6-25L	4468-19
		RAL16H6-35	4468-106
		RAL16H6-35L	4468-107
	TI	TIBPAL16H6	4469-38
16H8	AMD	AMPAL16H8AC	4469-101
		AMPAL16H8ALC	★**4901** 4469-102
		AMPAL16H8ALM	★**4901** 4470-63
		AMPAL16H8AM	4470-64
		AMPAL16H8BC	★**4901** 4469-61
		AMPAL16H8BM	4469-93
		AMPAL16H8C	4471-19
		AMPAL16H8LC	4471-20
		AMPAL16H8LM	4471-104
		AMPAL16H8M	4471-105
		AMPAL16H8QC	★**4901** 4471-21
		AMPAL16H8QM	★**4901** 4471-106
	Lattice	RAL16H8-15	4467-58
		RAL16H8-15L	4467-59
		RAL16H8-25	4468-20
		RAL16H8-25L	4468-21
		RAL16H8-35	4468-108
		RAL16H8-35L	4468-109
	TI	TIBPAL16H8	4469-39
16HD8	AMD	AMPAL16HD8AC	4469-103
		AMPAL16HD8ALC	★**4901** 4469-104
		AMPAL16HD8AM	4470-65
		AMPAL16HD8BC	★**4901** 4469-62
		AMPAL16HD8BM	4469-94
		AMPAL16HD8C	4471-22
		AMPAL16HD8LC	4471-23
		AMPAL16HD8LM	4471-107
		AMPAL16HD8M	4471-108
		AMPAL16HD8QC	★**4901** 4471-24
		AMPAL16HD8QM	★**4901** 4471-109
	TI	TIBPAL16HD8	4469-40
16K4	**Lattice**	**SR16K4-25**	★**4085** 3841-2
		SR16K4-25C	★**4085** 3841-3
		SR16K4-35	★**4085** 3841-23
		SR16K4-35C	★**4085** 3841-24
		SR16K4-45	★**4085** 3841-63
		SR16K4-45C	★**4085** 3841-64 (Continued)

Base Number	Source	Device	Page-Line
16K4	**Lattice**	**SR16K4-55C**	★**4085** 3842-4
16K8	**Lattice**	**SR16K8-25C**	★**4086** 3837-45
		SR16K8-35C	★**4086** 3837-50
		SR16K8-45C	★**4086** 3837-57
		SR16K8-55C	★**4086** 3837-77
16L2	Lattice	RAL16L2-15	4467-60
		RAL16L2-15L	4467-61
		RAL16L2-25	4468-22
		RAL16L2-25L	4468-23
		RAL16L2-35	4468-110
		RAL16L2-35L	4468-111
	MMI	HAL16L2-2C	4476-17
		HAL16L2-2M	4476-30
		HAL16L2C	4475-44
		HAL16L2M	4475-128
		PAL16L2-2C	★ **689** ★**4681** 4472-108
		PAL16L2-2M	★ **689** ★**4681** 4473-13
		PAL16L2C	★ **689** ★**4681** 4471-57
		PAL16L2M	★ **689** ★**4681** 4472-53
		ZHAL16L2C	4475-63
	National	PAL16L2AC	4470-43
		PAL16L2AM	4471-13
		PAL16L2C	4471-86
		PAL16L2M	4472-67
	Zytrex	ZX-CAL16L2	4475-92
16L6	Lattice	RAL16L6-15	4467-62
		RAL16L6-15L	4467-63
		RAL16L6-25	4468-24
		RAL16L6-25L	4468-25
		RAL16L6-35	4468-112
		RAL16L6-35L	4468-113
	MMI	HAL16L6C	4475-101
		HAL16L6M	4475-129
		PAL16L6C	★**4682** 4472-23
		PAL16L6M	★**4682** 4472-54
	National	PAL16L6C	4472-36
		PAL16L6M	4472-37
	TI	TIBPAL16L6	4469-41
16L68	**Raytheon**	**CGA16L68**	★ **700** ★**4740** 4454-3
16L8	AMD	AMPAL16L8AC	4469-105
		AMPAL16L8ALC	★**4901** 4469-106
		AMPAL16L8ALM	★**4901** 4470-66
		AMPAL16L8AM	4470-67
		AMPAL16L8BC	★**4901** 4469-63
		AMPAL16L8BM	4469-95
		AMPAL16L8C	4471-25
		AMPAL16L8LC	4471-26
		AMPAL16L8LM	4471-110
		AMPAL16L8M	4471-111
		AMPAL16L8QC	★**4901** 4471-27
		AMPAL16L8QM	★**4901** 4471-112
	Cypress	CYPALC16L8A-2CC	4471-46
		CYPALC16L8A-2MC	4472-15
		CYPALC16L8A-2WC	4473-29
		CYPALC16L8A-2WM	4473-41
		CYPALC16L8AC	4470-9
		CYPALC16L8ACC	4470-10 (Continued)

Arranged alphanumerically from left to right.

Base Number	Source	Device	Page-Line
16L8	Cypress	CYPALC16L8AM	4470-78
		CYPALC16L8AMC	4470-79
	Lattice	RAL16L8-15	4467-64
		RAL16L8-15L	4467-65
		RAL16L8-25	4468-26
		RAL16L8-25L	4468-27
		RAL16L8-35	4468-114
		RAL16L8-35L	4468-115
	MMI	HAL16L8A-2C	4475-45
		HAL16L8AC	4475-14
		HAL16L8AM	4475-25
		HAL16L8B-2C	4475-15
		HAL16L8B-4C	4475-46
		HAL16L8BC	4475-6
		HAL16L8M	4475-130
		PAL16L8A-2C	★ 690 ★ 691 ★ 4681 ★ 4683 ★ 4687 4471-58
		PAL16L8A-2M	★ 690 ★ 691 ★ 4681 ★ 4683 ★ 4687 4472-74
		PAL16L8A-4C	★ 690 ★ 691 ★ 4681 ★ 4683 ★ 4687 4472-86
		PAL16L8A-4M	★ 690 ★ 691 ★ 4681 ★ 4683 ★ 4687 4473-1
		PAL16L8AC	★ 690 ★ 691 ★ 4681 ★ 4683 ★ 4687 4470-18
		PAL16L8AM	★ 690 ★ 691 ★ 4681 ★ 4683 ★ 4687 4470-86
		PAL16L8B-2C	★ 690 ★ 691 ★ 4681 ★ 4683 ★ 4687 4470-19
		PAL16L8B-4C	★ 690 ★ 691 ★ 4681 ★ 4683 ★ 4687 4471-59
		PAL16L8BC	★ 690 ★ 691 ★ 4681 ★ 4683 ★ 4687 4469-72
		ZHAL16L8C	4475-64
	National	PAL16L8AC	4470-44
		PAL16L8AM	4471-14
		PAL16L8B	¶ 446-1
		PAL16L8C	4471-87
		PAL16L8M	4472-68
	TI	**PAL16L8A**	★ 725 4470-49
		PAL16L8A-2	★ 725 4471-100
		THCTPAL16L8	4473-22
		TIBPAL16L8-15	★ 725 ★ 4759 4469-80
			(Continued)
16L8	**TI**	**TIBPAL16L8-25**	★ 725 ★ 4759 4470-57
	Zytrex	ZX-CAL16L8	4475-93
16LC8	Harris	HPL16LC8	¶ 445-9
		HPL16LC8-2	★ 4652 4473-14
		HPL16LC8-5	★ 4652 4471-49
		HPL16LC8-9	★ 4652 4473-15
	SSS	SPL16LC8-35	4471-98
		SPL16LC8-45	4472-72
		SPL16LC8-55	4472-97
16LD8	AMD	AMPAL16LD8AC	4469-107
		AMPAL16LD8ALC	4469-108
		AMPAL16LD8ALM	4470-68
		AMPAL16LD8AM	4470-69
		AMPAL16LD8BM	4469-96
		AMPAL16LD8C	4471-28
		AMPAL16LD8LC	4471-29
		AMPAL16LD8LM	4471-113
		AMPAL16LD8M	4472-1
		AMPAL16LD8QC	4471-30
		AMPAL16LD8QM	4472-2
	TI	TIBPAL16LD8	4469-42
16P1	MMI	ZHAL16P1C	4475-65
16P2	Lattice	RAL16P2-15	4467-66
		RAL16P2-15L	4467-67
		RAL16P2-25	4468-28
		RAL16P2-25L	4468-29
		RAL16P2-35	4468-116
		RAL16P2-35L	4468-117
	MMI	ZHAL16P2C	4475-66
	Panatech	**16P2**	★ 4736 4473-36
		16P2AP-55	★ 4736 4472-92
		16P2BP-35	★ 4736 4471-94
	VTI	**VP16P2**	★ 4807 4474-42
16P6	Lattice	RAL16P6-15	4467-68
		RAL16P6-15L	4467-69
		RAL16P6-25	4468-30
		RAL16P6-25L	4468-31
		RAL16P6-35	4468-118
		RAL16P6-35L	4468-119
	TI	TIBPAL16P6	4469-43
16P8	**AMD**	AMPAL16P8LM	4472-3
	Fairchild	16P8B	4469-68
	Lattice	RAL16P8-15	4467-70
		RAL16P8-15L	4467-71
		RAL16P8-25	4468-32
		RAL16P8-25L	4468-33
		RAL16P8-35	4468-120
		RAL16P8-35L	4468-121
	MMI	HAL16P8A	4475-102
		PAL16P8AC	★ 4681 4470-20
		PAL16P8AM	★ 4681 4470-87
		ZHAL16P8C	4475-67
	Panatech	**16P8**	★ 4736 4473-37
	VTI	**VP16P8**	★ 4807 4474-43
16PR4	MMI	HAL16PR4A	4475-103
16R4	AMD	AMPAL16R4AC	4469-109
		AMPAL16R4ALC	4469-110
		AMPAL16R4AM	4470-70
		AMPAL16R4BC	4469-64
		AMPAL16R4C	4471-31
			(Continued)
16R4	AMD	AMPAL16R4LC	4471-32
		AMPAL16R4LM	4472-4
		AMPAL16R4M	4472-5
		AMPAL16R4QC	4471-33
		AMPAL16R4QM	★ 4901 4472-6
	Cypress	CYPALC16R4A-2CC	4471-47
		CYPALC16R4A-2MC	4472-16
		CYPALC16R4A-2WC	4473-30
		CYPALC16R4A-2WM	4473-42
		CYPALC16R4AC	4470-11
		CYPALC16R4ACC	4470-12
		CYPALC16R4AM	4470-80
		CYPALC16R4AMC	4470-81
	Lattice	RAL16R4-15	4467-72
		RAL16R4-15L	4467-73
		RAL16R4-25	4468-34
		RAL16R4-25L	4468-35
		RAL16R4-35	4468-122
		RAL16R4-35L	4468-123
	MMI	HAL16R4A-2C	4475-47
		HAL16R4AC	4475-16
		HAL16R4AM	4475-26
		HAL16R4B-2C	4475-17
		HAL16R4B-4C	4475-48
		HAL16R4BC	4475-7
		HAL16R4M	4475-131
		PAL16R4A-2C	★ 690 ★ 691 ★ 4683 ★ 4690 4471-60
		PAL16R4A-2M	★ 690 ★ 691 ★ 4683 ★ 4690 4472-75
		PAL16R4A-4C	★ 690 ★ 691 ★ 4683 ★ 4690 4472-87
		PAL16R4A-4M	★ 690 ★ 691 ★ 4683 ★ 4690 4473-2
		PAL16R4AC	★ 690 ★ 691 ★ 4683 ★ 4690 4470-21
		PAL16R4AM	★ 690 ★ 691 ★ 4683 ★ 4690 4470-88
		PAL16R4B-2C	★ 690 ★ 691 ★ 4683 ★ 4690 4470-22
		PAL16R4B-4C	★ 690 ★ 691 ★ 4683 ★ 4690 4471-61
		PAL16R4BC	★ 690 ★ 691 ★ 4683 ★ 4690 4469-73
		ZHAL16R4C	4475-68
	National	PAL16R4AC	4470-45
		PAL16R4AM	4471-15
		PAL16R4B	¶ 446-1
		PAL16R4C	4471-88
		PAL16R4M	4472-69
	TI	**PAL16R4A**	★ 725 4470-50
			(Continued)
16R4	**TI**	**PAL16R4A-2**	★ 725 4471-101
		THCTPAL16R4	★ 4797 4473-23
		TIBPAL16R4-15	★ 725 ★ 4759 4469-81
		TIBPAL16R4-25	★ 725 ★ 4759 4470-58
	Zytrex	ZX-CAL16R4	4475-94
16R6	AMD	AMPAL16R6AC	4470-1
		AMPAL16R6ALC	4470-2
		AMPAL16R6AM	4470-71
		AMPAL16R6BC	4469-65
		AMPAL16R6BM	4469-97
		AMPAL16R6C	4471-34
		AMPAL16R6LC	4471-35
		AMPAL16R6LM	4472-7
		AMPAL16R6M	4472-8
		AMPAL16R6QC	4471-36
		AMPAL16R6QM	4472-9
	Cypress	CYPALC16R6A-2CC	4471-48
		CYPALC16R6A-2MC	4472-17
		CYPALC16R6A-2WC	4473-31
		CYPALC16R6A-2WM	4473-43
		CYPALC16R6AC	4470-13
		CYPALC16R6ACC	4470-14
		CYPALC16R6AM	4470-82
		CYPALC16R6AMC	4470-83
	Lattice	RAL16R6-15	4467-74
		RAL16R6-15L	4467-75
		RAL16R6-25	4468-36
		RAL16R6-25L	4468-37
		RAL16R6-35	4468-124
		RAL16R6-35L	4468-125
	MMI	**16R6**	★ 4689
		HAL16R6A-2C	4475-49
		HAL16R6AC	4475-18
		HAL16R6AM	4475-27
		HAL16R6B-2C	4475-19
		HAL16R6B-4C	4475-50
		HAL16R6BC	4475-8
		HAL16R6M	4475-132
		PAL16R6A-2C	★ 690 ★ 691 ★ 4681 ★ 4683 ★ 4689 4471-62
		PAL16R6A-2M	★ 690 ★ 691 ★ 4681 ★ 4683 ★ 4689 4472-76
		PAL16R6A-4C	★ 690 ★ 691 ★ 4681 ★ 4683 ★ 4689 4472-88
		PAL16R6A-4M	★ 690 ★ 691 ★ 4681 ★ 4683 ★ 4689 4473-3
		PAL16R6AC	★ 690 ★ 691 ★ 4681 ★ 4683 ★ 4689
			(Continued)

¶ Indicates page number in Application Note Directory.
★ Indicates additional data is provided on the page noted.

Base Number	Source	Device	Page-Line
16R6	MMI	PAL16R6AC	4470-23
		PAL16R6AM	**★ 690**
			★ 691
			★4681
			★4683
			★4689
			4470-89
		PAL16R6B-2C	**★ 690**
			★ 691
			★4681
			★4683
			★4689
			4470-24
		PAL16R6B-4C	**★ 690**
			★ 691
			★4681
			★4683
			★4689
			4471-63
		PAL16R6BC	**★ 690**
			★ 691
			★4681
			★4683
			★4689
			4469-74
		ZHAL16R6C	4475-69
	National	PAL16R6AC	4470-46
		PAL16R6AM	4471-16
		PAL16R6B	¶ 446-1
		PAL16R6C	4471-89
		PAL16R6M	4472-70
	TI	**PAL16R6A**	**★ 725**
			4470-51
		PAL16R6A-2	**★ 725**
			4471-102
		THCTPAL16R6	**★4797**
			4473-24
		TIBPAL16R6-15	
			★ 725
			★4759
			4469-82
		TIBPAL16R6-25	
			★ 725
			★4759
			4470-59
	Zytrex	ZX-CAL16R6	4475-95
16R8	AMD	AMPAL16R8AC	4470-3
		AMPAL16R8ALC	
			4470-4
		AMPAL16R8AM	4470-72
		AMPAL16R8BC	
			4469-66
		AMPAL16R8BM	4469-98
		AMPAL16R8C	4471-37
		AMPAL16R8LC	4471-38
		AMPAL16R8LM	4472-10
		AMPAL16R8M	4472-11
		AMPAL16R8QC	
			4471-39
		AMPAL16R8QM	
			4472-12
	Cypress	CYPAL16R8A-2C	4471-43
		CYPALC16R8A-2MC	
			4472-18
		CYPALC16R8A-2WC	
			4473-32
		CYPALC16R8A-2WM	
			4473-44
		CYPALC16R8AC	4470-15
		CYPALC16R8ACC	
			4470-16
		CYPALC16R8AM	4470-84
		CYPALC16R8AMC	
			4470-85
	Lattice	RAL16R8-15	4467-76
		RAL16R8-15L	4467-77
		RAL16R8-25	4468-38
		RAL16R8-25L	4468-39
		RAL16R8-35	4468-126
		RAL16R8-35L	4468-127
	MMI	HAL16R8A-2C	4475-51
		HAL16R8AC	4475-20
		HAL16R8AM	4475-28
		HAL16R8B-4C	4475-52
		HAL16R8BC	4475-9
			(Continued)
16R8	MMI	HAL16R8M	4476-1
		PAL16R8A-2C	**★ 690**
			★ 691
			★4681
			★4683
			★4688
			4471-64
		PAL16R8A-2M	**★ 690**
			★ 691
			★4681
			★4683
			★4688
			4472-77
		PAL16R8A-4C	**★ 690**
			★ 691
			★4681
			★4683
			★4688
			4472-89
		PAL16R8A-4M	**★ 690**
			★ 691
			★4681
			★4683
			★4688
			4473-4
		PAL16R8AC	**★ 690**
			★ 691
			★4681
			★4683
			★4688
			4470-25
		PAL16R8AM	**★ 690**
			★ 691
			★4681
			★4683
			★4688
			4470-90
		PAL16R8B-2C	**★ 690**
			★ 691
			★4681
			★4683
			★4688
			4470-26
		PAL16R8B-4	**★ 690**
			★ 691
			★4681
			★4683
			★4688
			4471-65
		PAL16R8BC	**★ 690**
			★ 691
			★4681
			★4683
			★4688
			4469-75
		ZHAL16R8C	4475-70
	National	PAL16R8AC	4470-47
		PAL16R8AM	4471-17
		PAL16R8B	¶ 446-1
		PAL16R8C	4471-90
		PAL16R8M	4472-71
	TI	**PAL16R8A**	**★ 725**
			4470-52
		PAL16R8A-2	**★ 725**
			4471-103
		THCTPAL16R8	**★4797**
			4473-25
		TIBPAL16R8-15	
			★ 725
			★4759
			4469-83
		TIBPAL16R8-25	
			★ 725
			★4759
			4470-60
	Zytrex	ZX-CAL16R8	4475-96
16RA8	MMI	HAL16RA8C	4475-104
		PAL16RA8	**★4681**
			4470-91
16RC4	**Harris**	**HPL16RC4-2**	**★4652**
			4473-16
		HPL16RC4-9	**★4652**
			4473-17
	SSS	SPL16RC4-30	4472-98
16RC6	**Harris**	**HPL16RC6-2**	**★4652**
			4473-18
			(Continued)
16RC6	**Harris**	**HPL16RC6-9**	**★4652**
			4473-19
	SSS	SPL16RC6-20	4471-99
		SPL16RC6-25	4472-73
		SPL16RC6-30	4472-99
16RC8	**Harris**	**HPL16RC8-2**	**★4652**
			4473-20
		HPL16RC8-9	**★4652**
			4473-21
	SSS	SPL16RC8-20	4469-100
		SPL16RC8-25	4470-48
		SPL16RC8-30	4471-18
16RP4	Fairchild	16RP4B	4469-69
	Lattice	RAL16RP4-15	4467-78
		RAL16RP4-15L	4467-79
		RAL16RP4-25	4468-40
		RAL16RP4-25L	4468-41
		RAL16RP4-35	4468-128
		RAL16RP4-35L	4468-129
	MMI	**PAL16RP4AC**	**★4681**
			4470-27
		PAL16RP4AM	**★4681**
			4470-92
		ZHAL16RP4C	4475-71
	Panatech	**16RP4AP-55**	**★4736**
			4472-93
		16RP4BP-35	**★4736**
			4471-95
	VTI	VP16RP4	4474-44
16RP6	Fairchild	16RP6B	4469-70
	Lattice	RAL16RP6-15	4467-80
		RAL16RP6-15L	4467-81
		RAL16RP6-25	4468-42
		RAL16RP6-25L	4468-43
		RAL16RP6-35	4468-130
		RAL16RP6-35L	4468-131
	MMI	HAL16RP6A	4475-105
		PAL16RP6AC	**★4681**
			4470-28
		PAL16RP6AM	**★4681**
			4470-93
		ZAL16RP6C	4475-53
	Panatech	**16RP6**	**★4736**
			4473-38
		16RP6AP-55	**★4736**
			4472-94
		16RP6BP-35	**★4736**
			4471-96
	VTI	**VP16RP6**	**★4807**
			4474-45
16RP8	Fairchild	16RP8B	4469-71
	Lattice	RAL16RP8-15	4467-82
		RAL16RP8-15L	4467-83
		RAL16RP8-25	4468-44
		RAL16RP8-25L	4468-45
		RAL16RP8-35	4468-132
		RAL16RP8-35L	4468-133
	MMI	HAL16RP8A	4475-106
		PAL16RP8AC	**★4681**
			4470-29
		PAL16RP8AM	**★4681**
			4470-94
		ZHAL16RP8C	4475-72
	Panatech	**16RP8**	**★4736**
			4473-39
		16RP8AP-55	**★4736**
			4472-95
		16RP8BP-35	**★4736**
			4471-97
	VTI	**VP16RP8**	**★4807**
			★4808
			4474-46
		VP16RP8M	**★4807**
			★4808
			4470-61
16V8	**Lattice**	**GAL16V8-15**	**★4666**
			4467-14
			4467-26
		GAL16V8-15L	**★4666**
			4467-15
		GAL16V8-25	**★4666**
			4467-16
			4467-114
		GAL16V8-25L	**★4666**
			4467-17
			4467-27
			(Continued)
16V8	Lattice	GAL16V8-25L	4467-115
		GAL16V8-35	**★4666**
			4467-18
			4468-76
		GAL16V8-35L	**★4666**
			4467-19
			4468-77
16X4	Dense-Pac	DPS16X4	3844-119
		DPX16X4	**★4008**
			3845-99
	MMI	HAL16X4C	4475-107
		HAL16X4M	4476-2
		PAL16X4C	**★ 690**
			★4681
			4472-24
		PAL16X4M	**★ 690**
			★4681
			4472-55
16X5	**Dense-Pac**	**DPX16X5**	**★4008**
			3845-106
16X6	Dense-Pac	DPS16X6	3845-105
16Z8	Lattice	GAL16Z8	4469-29
		ispGAL16Z8-15	**★4668**
			4467-2
		ispGAL16Z8-15L	
			★4668
			4467-3
		ispGAL16Z8-25	**★4668**
			4467-6
		ispGAL16Z8-25L	
			★4668
			4467-7
		ispGAL16Z8-35	**★4668**
			4467-10
		ispGAL16Z8-35L	
			★4668
			4467-11
17	LinearTech	LT17AHV	3394-31
	LogicDev	LMU17	843-70
		LMU17C	807-97
		LMU17M	807-144
	PMI	OP-17	¶ 393-12
		OP-17A	**★3636**
			3342-14
		OP-17B	**★3636**
			3344-30
		OP-17C	**★3636**
			3346-182
		OP-17E	**★3636**
			3342-15
		OP-17F	**★3636**
			3344-31
		OP-17G	**★3636**
			3346-183
170	**Inmos**	**IMSG170-20**	**★3195**
			843-148
			2850-6
			1465-61
		IMSG170-35	**★3195**
			843-149
			2850-7
			1465-62
		IMSG170-50	**★3195**
			843-150
			2850-8
			1465-63
	Siemens	UAA170	3400-83
	Telefunken	K170P	¶ 420-8
	TI	TL170C	891-91
1700	National	LX1700	¶ 429-6
		LX1700G	¶ 429-9
			¶ 429-10
	TI	TMS1700	1413-34
1700A2	Vatic	B1700A2	4457-47
1701	National	LX1701	¶ 429-6
1702	TeledyneP	1702	¶ 406-3
1704	**Unitrode**	**UC1704**	**★3740**
			3398-93
1705	TI	TCM1705A	¶ 413-18

Arranged alphanumerically from left to right.

Base Number	Source	Device	Page-Line
1706	Intech	UC1706	¶ 397-6
	TI	TCM1706	¶ 413-18
	Unitrode	**UC1706**	★**3740**
			3405-145
1707	**Unitrode**	**UC1707**	★**3740**
			3399-75
	Hitachi	HA17080	3357-130
17082	Hitachi	HA17082	3368-47
17083	Hitachi	HA17083	3368-48
17084	Hitachi	HA17084	3373-53
1709	**Motorola**	**MC1709**	★**3615**
			3354-10
		MC1709A	★**3615**
			3346-228
		MC1709C	★**3615**
			3356-39
171	**AD**	**171**	★**3507**
	Siliconix	DG171	¶ 402-16
1710	Cermetek	CH1710	3380-46
1711	DataTrans	DT1711	2043-4
1712	DataTrans	DT1712	2042-70
1714	Supertex	HV1714	2829-30
1715	DataTrans	DT1715	2043-6
1716	DataTrans	DT1716	2042-71
	Supertex	HV1716	2829-32
1719	DataTrans	DT1719	2043-5
172	**Siliconix**	**DG172A**	★**3223**
			2824-92
		DG172B	★**3223**
			2824-93
		DG172C	★**3223**
			2824-94
1720	Cermetek	CH1720	3380-47
1723	**Motorola**	**MC1723**	★**3625**
			3393-118
		MC1723C	★**3625**
			3393-119
1724	**RCA**	**CA1724G**	★**3678**
			3310-47
1725	**RCA**	**CA1725G**	★**3678**
			3310-48
1728	Reticon	RL1728H	3400-31
173	**Signetics**	**PLC173**	★**4154**
		PLHS173	★**4154**
			4473-80
		PLS173	★**4154**
			★**4164**
			4473-81
1730	Cermetek	CH1730	3380-48
17301	Hitachi	HA17301	3334-181
1731	SiliconG	SG1731	2896-8
			¶ 420-13
17324	Hitachi	HA17324	3334-147
1733	**Motorola**	**MC1733**	★**3616**
			3307-153
			¶ 394-13
		MC1733C	★**3616**
			3307-154
17339	Hitachi	HA17339	3316-19
17358	Hitachi	HA17358	3334-130
1737	ThomsonCSF	TDE1737	2896-85
17393	Hitachi	HA17393	3314-34
1740	AD	SDC1740	3403-94
	Cermetek	CH1740	3380-49
1741	AD	SDC1741	3403-95
	Motorola	**MC1741**	★**3616**
			3330-23
			3353-43
		MC1741C	★**3616**
			3355-29
		MC1741S	★**3616**
			3354-5
		MC1741SC	★**3616**
			3355-43
	Panasonic	AN1741	3350-29
1742	AD	SDC1742	3403-96
	DataTrans	DT1742	2035-16
	Signetics	**TDD1742**	★**3727**
			★**3731**
			★**3733**
1744	DataTrans	DT1744	2035-66
17458	Hitachi	HA17458	3330-3
1747	**Motorola**	**MC1747**	★**3617**
			3366-12
		MC1747C	★**3617**
			3367-11
1748	DataTrans	DT1748	2035-62
	Motorola	**MC1748**	★**3615**
			3354-1
		MC1748C	★**3615**
			3355-39
175	Cherry	CS175	2895-141
	Telefunken	U175	2874-55
			3399-93
1750	AMCC	Q1750C	4439-9
	Mikros	MKS1750/C	1817-13
		MKS1750/M0	2023-30
		MKS1750/M0	2023-31
		MKS1750/S0	2023-29
1751	DataTrans	DT1751	2035-59
17524	Hitachi	HA17524	3395-114
1755	DataTrans	DT1755	2035-65
17555	Hitachi	HA17555	3383-35
17558	Hitachi	HA17558	3367-31
1759	DataTrans	DT1759	2035-63
176	Telefunken	U176	2874-56
			3399-94
1760	Cermetek	CH1760	3379-105
1761	DataTrans	DT1761	2037-58
	ThomsonCSF	TEC1761C	3367-44
		TEC1761M	3363-87
1762	DataTrans	DT1762	2037-43
1763	Cermetek	CH1763	3379-106
1764	DataTrans	DT1764	2037-66
1765	AD	DRC1765	3403-123
	Cermetek	CH1765	3379-107
			¶ 412-11
	DataTrans	DT1765	2037-64
1766	AD	DRC1766	3403-124
1767	ThomsonCSF	TDE1767	2896-87
		TDE1767A	2896-89
1768	DataTrans	DT1768	2037-60
1769	DataTrans	DT1769	2037-61
	SGS	TDA1770	3326-142
	Telefunken	TDA1770	3326-159
	VTI	**VL1770**	★**1751**
			★**1752**
			★**1766**
			1466-108
	Western	WD1770	1466-109
1771	DataTrans	DT1771	2043-3
	National	INS1771	1461-28
			1467-35
			¶ 365-2
	Western	FD1771-01	1461-29
			1467-16
17715	Hitachi	HA17715	3334-227
			3356-32
1772	**VTI**	**VL1772**	★**1751**
			★**1752**
			★**1776**
			1467-15
	Western	WD1772	1467-21
17723	Hitachi	HA17723	3393-116
1773	Western	WD1773	1467-22
17733	Hitachi	HA17733	3307-148
17741	Hitachi	HA17741	3355-28
17747	Hitachi	HA17747	3367-9
1776	**Motorola**	**MC1776**	★**3616**
			3347-15
			3334-30
			3353-8
		MC1776C	★**3616**
			3347-23
			3334-45
	SGS	MC1776	3353-7
		MC1776C	3355-11
1777	DataTrans	DT1777	2043-1
	ThomsonCSF	TDE1777	2896-81
1778	DataTrans	DT1778	2043-2
178	Siemens	S178A	3324-66
	ZAX	ICD-178/278	1821-26
17805	Hitachi	HA17805P	3385-1
17806	Hitachi	HA17806P	3385-119
17808	Hitachi	HA17808	3386-40
17812	Hitachi	HA17812P	3387-70
17815	Hitachi	HA17815P	3388-60
17818	Hitachi	HA17818	3388-125
17824	Hitachi	HA17824P	3389-107
1787	ThomsonCSF	TDE1787	2896-86
		TDE1787A	2896-88
179	Cherry	CS179	3328-10
	Siemens	SAB179X	1467-8
	Signetics	**PLS179**	★**4154**
			(Continued)
179	Signetics	PLS179	4473-62
	Western	FD179X	¶ 365-4
17902	Hitachi	HA17902	3334-107
1791	Siemens	SAB1791-02	1467-37
	SMC	FDC1791	1467-9
	Western	FD1791-02	1461-30
			1467-17
1792	SMC	FDC1792	1467-10
1793	SMC	FDC1793	1467-11
	Western	FD1793-02	1455-23
			1459-5
			1457-158
			1457-324
			1463-58
			1467-18
1794	SMC	FDC1794	1467-12
1795	SMC	FDC1795	1467-13
	Western	FD1795-02	1461-31
			1467-19
1797	SMC	FDC1797	1467-14
	Western	FD1797-02	1455-24
			1459-6
			1457-159
			1457-325
			1463-59
			1467-20
17G005	Toshiba	TC17G005	4456-46
		TC17G005	★**4799**
17G008	**Toshiba**	**TC17G008**	★**4799**
			4456-47
17G014	**Toshiba**	**TC17G014**	★**4799**
17G022	**Toshiba**	**TC17G022**	★**4799**
17G032	**Toshiba**	**TC17G032**	★**4799**
			4456-51
17G042	**Toshiba**	**TC17G042**	★**4799**
			4457-2
17G064	Toshiba	TC17G064	4457-4
17G080	Toshiba	TC17G080	4457-6
17G100	Toshiba	TC17G100	4457-7
17G14	Toshiba	TC17G14	4456-49
18	Cortex	Cortex18	2013-21
	Dense-Pac	**DPN18**	★**4008**
			3812-1
	Interdesign	ULA18ARA	4443-34
		ULA18ARB	4443-35
		ULA18ARC	4443-37
		ULA18ARD	4443-38
		ULA18RB	4443-36
		ULA18RC	4443-39
		ULA18RD	4443-40
	Lambda	LAS18U	3394-59
	LogicDev	LMU18	843-71
		LMU18C	807-149
		LMU18M	807-150
	TeledyneC	CDA18	2824-127
	Wintek	**MCH18**	★**2118**
			2005-33
180	ACE	DPC-180	2021-12
	Calmos	CA180	4441-4
	Cherry	CS180	3405-127
	Intersil	**DG180A**	★**3196**
			2822-87
			2822-93
		DG180B	★**3196**
			2822-88
			2822-94
	Siemens	UAA180	2874-11
			3400-84
	SiliconSys	SSI180	3380-67
	Siliconix	**DG180A**	★**3223**
			2822-89
			2822-95
		DG180B	★**3223**
			2822-90
			2822-96
	Telefunken	U180M	2875-18
			¶ 381-5

¶ Indicates page number in Application Note Directory.
★ Indicates additional data is provided on the page noted.

Base Number	Source	Device	Page-Line
1800	ArrayTech	DHS1800	4439-26
	Calmos	CA1800	4441-17
	National	LM1800	3322-113
	RCA	CDP1800	¶ 376-11
			¶ 378-4
			¶ 378-5
			¶ 378-6
			¶ 379-18
			¶ 380-17
			¶ 380-18
			¶ 438-14
	CalDevices	**CHA18000**	**★4610**
			4441-2
1801	National	LM1801	3328-15
1802	Hughes	HCMP1802A	1451-104
		HCMP1802AC	1451-105
		HCMP1802BC	1451-106
		HMMP1802A	1451-107
		HMMP1802AC	1451-108
		HMMP1802BC	1451-109
	Lambda	LAS1802	3389-124
	RCA	**CDP1802**	**★1673**
			1427-33
			¶ 368-3
			¶ 374-8
			¶ 376-1
			¶ 377-2
			¶ 378-7
			¶ 378-17
			¶ 381-3
			¶ 381-6
			¶ 381-10
			¶ 382-15
			¶ 382-16
			¶ 383-10
		CDP1802A	**★1673**
			1451-110
			1427-34
		CDP1802AC	**★1673**
			1451-111
			1427-35
		CDP1802BC	**★1673**
			1451-112
			1427-36
		CDP1802C	**★1673**
			1427-37
		CDP 1802	¶ 374-9
		COSMAC 1802	¶ 373-16
1804	RCA	CDP1804	¶ 378-8
			¶ 380-18
		CDP1804A	¶ 369-11
		CDP1804AC	**★1673**
			1451-102
			¶ 368-11
			1427-38
		CDP1804PC	**★1673**
			1451-103
1805	Lambda	LAS1805	3390-42
			¶ 427-5
	RCA	CDP1805	¶ 378-8
		CDP1805A	¶ 369-11
		CDP1805AC	**★1673**
			1451-114
			¶ 368-11
			1427-39
18052	Lambda	LAS18052	3390-73
1806	Lambda	LAS1806	3390-94
	RCA	CDP1806A	¶ 369-11
		CDP1806AC	**★1673**
			1451-113
			1427-40
	Xycom	1806A	2007-30
1808	Lambda	LAS1808	3390-110
1809	RCA	CDP1809	¶ 376-11
181	**Intersil**	**DG181A**	**★3196**
			2822-102
			2822-106
		DG181B	**★3196**
			2822-113
			2823-2
		DGM181B	**★3196**
			2822-38
		IH181C	2822-114
			2823-3
		IH181M	2822-103
			2822-107
	National	AM181	2822-104
			2822-108
	Siliconix	DG181	¶ 402-12
			¶ 402-16
		DG181A	**★3223**
			2822-105
			2822-109
		DG181B	**★3223**
			2822-115
			2823-4
1810	Cermetek	CH1810	¶ 395-18
	Lambda	LAS1810	3391-4
	Xycom	1810Z	2007-31
1812	Analogic	MP1812A	2865-32
	Cermetek	CH1812	¶ 395-18
	Lambda	LAS1812	3391-49
	National	LM1812	3323-16
1814	Analogic	MP1814	2870-34
	Supertex	HV1814	2830-98
1815	Lambda	LAS1815	3391-115
1816	Supertex	HV1816	2830-101
1818	**Harris**	**HI1818A-2**	**★3188**
			2830-165
		HI1818A-5	**★3188**
			2830-166
		HI1818A-8	**★3188**
			2830-167
	Lambda	LAS1818	3392-15
	National	LM1818	3324-1
1819	National	LM1819	3398-37
182	Datel	VR-182A	3402-30
		VR-182B	3402-31
		VR-182C	3402-32
	Intersil	**DG182A**	**★3196**
			2823-13
			2823-17
		DG182B	**★3196**
			2823-26
			2823-30
		DGM182A	**★3196**
			2822-39
		DGM182B	**★3196**
			2822-63
		IH182C	2823-27
			2823-31
		IH182M	2823-14
			2823-18
	National	AM182	2823-12
			2823-16
	Siliconix	**DG182A**	**★3223**
			2823-15
			2823-20
		DG182B	**★3223**
			2823-29
			2823-33
1820	Lambda	LAS1820	3392-34
1821	National	LM1821	3321-76
	RCA	CDP1821	3834-105
			1452-31
		CDP1821C	3834-112
			1452-32
1822	Hughes	HCMP1822C	1452-27
		HMMP1822C	3833-93
			1452-28
	National	LM1822	3327-22
	RCA	**CDP1822**	**★1673**
			★1676
			3833-67
			¶ 382-14
			¶ 441-7
			★1673
			★1676
			1452-29
		CDP1822C	**★1673**
			★1676
			3833-94
			★1673
			★1676
			1452-30
1823	National	LM1823	3327-23
			¶ 418-3
	RCA	**CDP1823**	**★1673**
			★1676
			3832-31
			★1673
			★1676
			1452-25
		CDP1823C	**★1673**
			★1676
			3832-37
			★1673
			★1676
			1452-26
1824	Hughes	HCMP1824	831-129
			3832-4
			1452-18
		HCMP1824C	831-130
			3832-8
			1452-19
		HMMP1824	831-125
			3832-5
			1452-20
		HMMP1824C	831-126
			3832-9
			1452-21
	Lambda	LAS1824	3392-57
	RCA	**CDP1824**	**★1673**
			★1676
			831-127
			¶ 382-12
			¶ 441-6
			★1673
			★1676
			3832-6
			★1673
			★1676
			1452-22
		CDP1824C	**★1673**
			★1676
			831-128
			★1673
			★1676
			3832-7
			★1673
			★1676
			1452-23
1825	**Unitrode**	**UC1825**	**★3739**
			3398-121
		UC1825/883B	**★3739**
			3398-122
1826	**RCA**	**CDP1826C**	**★1673**
			★1676
			3832-18
			★1673
			★1676
			1452-24
1827	**RCA**	**CDP1827**	**★1678**
1828	**Harris**	**HI1828A-2**	**★3188**
			2830-55
		HI1828A-5	**★3188**
			2830-56
1828	**Harris**	**HI1828A-8**	**★3188**
			2830-57
	National	LM1828	3324-134
183	ACE	DPC-183	2005-2
	Intersil	**DG183A**	**★3196**
			2827-15
			2827-19
		DG183B	**★3196**
			2827-16
			2827-20
		DGM183	**★3196**
	SiliconSys	SSI183	2896-18
	Siliconix	**DG183A**	**★3223**
			2827-17
			2827-21
		DG183B	**★3223**
			2827-18
			2827-22
1830	National	LM1830	3399-96
1831	Hughes	HCMP1831	3849-5
			1452-35
		HCMP1831C	3849-11
			1452-36
		HMMP1831	3849-7
			1452-39
		HMMP1831C	3849-13
			1452-40
	RCA	**CDP1831**	**★1673**
			★1677
			3849-9
			¶ 382-13
			¶ 442-5
			★1673
			★1677
			1452-43
		CDP1831C	**★1673**
			★1677
			3849-15
			★1673
			★1677
			1452-44
1832	Hughes	HCMP1832	3849-6
			1452-37
		HCMP1832C	3849-12
			1452-38
		HMMP1832	3849-8
			1452-41
		HMMP1832C	3849-14
			1452-42
	RCA	**CDP1832**	**★1673**
			★1677
			3849-10
			¶ 382-13
			¶ 442-5
			★1673
			★1677
			1452-45
		CDP1832C	**★1673**
			★1677
			3849-16
			★1673
			★1677
			1452-46
1833	Hughes	HCMP1833	3849-20
			1452-47
		HCMP1833C	3849-28
			1452-48
		HMMP1833	3849-22
			1452-51
		HMMP1833C	3849-30
			1452-52
	RCA	**CDP1833**	**★1673**
			★1677
			★1678
			3849-24
			¶ 442-6
			★1673
			★1677
			★1678
			1452-55
		CDP1833C	**★1673**

(Continued)

(Continued)

Arranged alphanumerically from left to right.

Base Number	Source	Device	Page-Line
1833	**RCA**	**CDP1833C**	★ **1677**
			★ **1678**
			3849-26
			★ **1673**
			★ **1677**
			★ **1678**
			1452-56
1834	Hughes	HCMP1834	3849-21
			1452-49
		HCMP1834C	3849-29
			1452-50
		HMMP1834	3849-23
			1452-53
		HMMP1834C	3849-31
			1452-54
	RCA	**CDP1834**	★ **1673**
			★ **1677**
			3849-25
			¶ 442-6
			★ **1673**
			★ **1677**
			1452-57
		CDP1834C	★ **1673**
			★ **1677**
			3849-27
			★ **1673**
			★ **1677**
			1452-58
	Unitrode	**UC1834**	★ **3740**
			3401-114
			¶ 427-20
		UC1834/883B	★ **3740**
			3401-115
1835	Hughes	HCMP1835	1452-59
		HCMP1835C	1452-60
		HMMP1835	1452-61
		HMMP1835C	1452-62
	RCA	**CDP1835C**	★ **1673**
			★ **1677**
			3849-44
			★ **1673**
			★ **1677**
			1452-65
1836	Hughes	HMMP1836	1452-63
		HMMP1836C	1452-64
1837	National	1837	¶ 409-8
		LM1837	3319-7
			3324-24
			¶ 416-9
	RCA	**CDP1837C**	★ **1673**
			★ **1677**
			3850-24
			★ **1673**
			★ **1677**
			1452-66
	SGS	LM1837	3319-22
			3324-25
184	**Intersil**	**DG184A**	★ **3196**
			2827-30
			2827-34
		DG184B	★ **3196**
			2827-40
			2827-44
		DGM184	★ **3196**
		IH184C	2827-41
			2827-45
		IH184M	2827-31
			2827-35
	National	AM184	2827-32
			2827-36
	SiliconSys	SSI184	2896-21
	Siliconix	**DG184A**	★ **3223**
			2827-33
			2827-37
		DG184B	★ **3223**
			2827-42
			2827-46
1840	**Harris**	**HS1840RH**	★ **672**
			2831-97
			(Continued)
1840	SGS	UC1840	3396-64
	SiliconG	SG1840	3401-141
	Telmos	TML1840	2854-18
	Unitrode	**UC1840**	★ **3739**
			3397-53
			¶ 425-8
		UC1840/883B	★ **3739**
			3397-54
1841	DataTrans	DT1841	2035-57
	Telmos	TML1841	2855-24
1842	DataTrans	DT1842	2035-52
	IPS	**IP1842**	★ **3599**
			3395-120
	Telmos	TML1842	2854-14
	Unitrode	**UC1842**	★ **3739**
			3398-126
			¶ 426-13
		UC1842/883B	★ **3739**
			3397-55
1843	DataTrans	DT1843	2035-53
	IPS	**IP1843**	★ **3599**
			3395-121
	Unitrode	**UC1843**	★ **3739**
			3398-127
1846	Intech	UC1846	¶ 391-7
	LinearTech	UC1846	3396-7
	Unitrode	**UC1846**	★ **3739**
			3398-128
			¶ 425-5
		UC1846/883B	★ **3739**
			3398-129
1847	LinearTech	UC1847	3396-8
	Unitrode	**UC1847**	★ **3739**
			3398-130
		UC1847/883B	★ **3739**
			3398-131
1848	National	LM1848	3324-135
185	**Intersil**	**DG185A**	★ **3196**
			2827-51
			2827-55
		DG185B	★ **3196**
			2827-60
			2827-64
		DGM185	★ **3196**
		IH185C	2827-61
			2827-65
		IH185M	2827-52
			2827-56
	LinearTech	LM185-1	3402-4
	National	AM185	2827-50
			2827-54
		LM185	3402-11
		LM185-1	3402-26
		LM185-2	3402-64
	Siliconix	**DG185A**	★ **3223**
			2827-53
			2827-57
		DG185B	★ **3223**
			2827-63
			2827-67
1850	AMD	AMMPA1850	4462-1
	Telmos	TML1850	844-22
			2854-15
1851	Hughes	HMMP1851	1452-10
		HMMP1851C	1452-11
	National	LM1851	3327-137
	RCA	**CDP1851**	★ **1673**
			★ **1679**
			1452-12
			¶ 373-2
			¶ 373-3
		CDP1851C	★ **1673**
			★ **1679**
			1452-13
1852	Hughes	HCMP1852	842-70
			1452-111
		HCMP1852C	842-71
			1452-112
		HMMP1852	842-64
			1452-113
		HMMP1852C	842-65
			1452-114
	RCA	**CDP1852**	★ **1673**
			★ **1679**
			1452-115
			¶ 373-4
			¶ 381-10
		CDP1852C	★ **1673**
			★ **1679**
			842-66
	Telmos	TML1852	844-23
			2854-16
1853	Hughes	HCMP1853	817-1
			1452-4
		HCMP1853C	817-2
			1452-5
		HMMP1853	816-149
			1452-6
		HMMP1853C	816-150
			1452-7
	RCA	**CDP1853**	★ **1673**
			★ **1679**
			816-151
			★ **1673**
			★ **1679**
			1452-8
		CDP1853C	★ **1673**
			★ **1679**
			816-152
			★ **1673**
			★ **1679**
			1452-9
1854	Hughes	HCMP1854A	1452-67
		HCMP1854AC	1452-68
		HMMP1854A	1452-69
		HMMP1854AC	1452-70
	RCA	CDP1854	¶ 373-5
		CDP1854A	★ **1673**
			★ **1679**
			1452-71
		CDP1854AC	★ **1673**
			★ **1679**
			2901-75
			★ **1673**
			★ **1679**
			1452-72
1855	Hughes	HCMP1855	1451-128
		HCMP1855C	1451-129
		HMMP1855	1451-130
		HMMP1855C	1452-1
	RCA	**CDP1855**	★ **1673**
			★ **1679**
			1452-2
			¶ 382-11
		CDP1855C	★ **1673**
			★ **1679**
			1452-3
1856	Hughes	HCMP1856	1452-83
		HCMP1856C	1452-84
		HMMP1856	1452-85
		HMMP1856C	1452-86
	RCA	**CDP1856**	★ **1673**
			★ **1679**
			1452-87
			¶ 382-15
		CDP1856C	★ **1673**
			★ **1679**
			1452-88
1857	Hughes	HCMP1857	1452-89
		HCMP1857C	1452-90
		HMMP1857	1452-91
		HMMP1857C	1452-92
	RCA	**CDP1857**	★ **1673**
			★ **1679**
			1452-93
			(Continued)
1857	RCA	CDP1857	¶ 382-15
		CDP1857C	★ **1673**
			★ **1679**
			1452-94
1858	Hughes	HCMP1858	1452-95
		HCMP1858C	1452-96
		HMMP1858	1452-97
		HMMP1858C	1452-98
	RCA	**CDP1858**	★ **1673**
			★ **1676**
			★ **1679**
			1452-99
		CDP1858C	★ **1673**
			★ **1676**
			★ **1679**
			1452-100
1859	Hughes	HCMP1859	1452-101
		HCMP1859C	1452-102
		HMMP1859	1452-103
		HMMP1859C	1452-104
	RCA	**CDP1859**	★ **1673**
			★ **1676**
			★ **1679**
			1452-105
		CDP1859C	★ **1673**
			★ **1676**
			★ **1679**
			1452-106
186	AdvDigital	Super 186	2027-1
	AMD	iAPX186	1461-32
			1433-36
	Ampro	Little Board/186	2025-33
		LittleBoard/186	2025-34
	EnergySci	Multimaster186	2023-13
	InnovRes	GDC-186	2034-22
	Intel	iSBC186/03A	2021-27
		iSBC186/224	2021-38
	Intersil	**DG186A**	★ **3196**
			2825-9
			2825-13
		DG186B	★ **3196**
			2825-10
			2825-14
		DGM186	★ **3196**
	Lomas	Thunder 186	2027-2
	Siliconix	**DG186A**	★ **3223**
			2825-11
			2825-15
		DG186B	★ **3223**
			2825-12
			2825-16
	Zendex	ZX186/30	2021-30
1861	Hughes	HMMP1861	1452-75
		HMMP1861C	1452-76
1862	Xycom	1862+A	2007-32
1863	National	LM1863	3321-22
			¶ 414-13
			¶ 414-16
			¶ 414-18
	RCA	**CDP1863**	★ **1673**
			★ **1679**
			1452-16
		CDP1863C	★ **1673**
			★ **1679**
			1452-17
	SMC	COM1863	2901-59
	Telmos	TMC1863	843-151
		TML1863	2850-5
	Western	TR1863-00	2901-71
		TR1863-02	2901-76
		TR1863-04	2901-85
1865	National	LM1865	3322-4
			¶ 414-13
	Western	TR1865	¶ 394-16
		TR1865-00	2901-72
		TR1865-02	2901-77

¶ Indicates page number in Application Note Directory.
★ Indicates additional data is provided on the page noted.

Base Number	Source	Device	Page-Line
1866	National	LM1866	3321-90
	RCA	**CDP1866**	**★1673**
			★1676
			★1679
			1451-117
		CDP1866C	**★1673**
			★1676
			★1679
			1451-118
18660	TI	$18660	4493-22
1867	**RCA**	**CDP1867**	**★1673**
			★1676
			★1679
			1451-119
		CDP1867C	**★1673**
			★1676
			★1679
			1451-120
1868	National	LM1868	3321-77
	RCA	**CDP1868**	**★1673**
			★1676
			★1679
			1451-121
		CDP1868C	**★1673**
			★1676
			★1679
			1451-122
	Xycom	1868+A	2023-23
1869	RCA	CDP1869	¶ 378-4
			¶ 383-10
			¶ 394-14
			¶ 430-1
			¶ 436-1
		CDP1869C	**★1673**
			★1679
			1452-77
187	DY-4	DSTD-187	2019-24
	Intersil	**DG187A**	**★3196**
			2825-22
			2825-26
		DG187B	**★3196**
			2825-32
			2825-36
		DGM187	**★3196**
		IH187C	2825-33
			2825-37
		IH187M	2825-23
			2825-27
	National	AM187	2825-24
			2825-28
	Siemens	S187B	3375-140
	Siliconix	**DG187A**	**★3223**
			2825-25
			2825-29
		DG187B	**★3223**
			2825-34
			2825-38
1870	National	LM1870	3322-114
	RCA	CDP1870	¶ 376-11
			¶ 378-4
			¶ 383-10
			¶ 394-14
			¶ 430-1
			¶ 436-1
		CDP1870C	**★1673**
			★1679
			1452-78
	Signetics	**LM1870**	**★3727**
			3322-135
1871	National	LM1871	3323-41
	RCA	**CDP1871A**	**★1673**
			★1679
			2880-9
			★1673
			★1679
			1451-115
		CDP1871AC	**★1673**
			★1679
			2880-10
			★1673
			★1679
			1451-116
1872	National	LM1872	3323-42
	RCA	**CDP1872C**	**★1673**
			★1679
			842-67
			★1673
			★1679
			1452-116
1873	**RCA**	**CDP1873C**	**★1673**
			★1679
			1452-82
1874	**RCA**	**CDP1874C**	**★1673**
			★1679
			842-68
			★1673
			★1679
			1452-117
1875	National	LM1875	3318-99
	RCA	**CDP1875C**	**★1673**
			★1678
			★1679
			842-69
			★1673
			★1678
			★1679
			1452-118
1876	RCA	CDP1876	¶ 376-11
			¶ 378-4
			¶ 383-10
			¶ 430-1
		CDP1876C	**★1673**
			★1679
			1452-79
1877	National	LM1877	3318-179
	RCA	**CDP1877**	**★1673**
			★1679
			1452-14
		CDP1877C	**★1673**
			★1679
			1452-15
1878	RCA	CD1878	1452-80
		CDP1878	¶ 356-16
		CDP1878C	**★1673**
			★1679
			1452-81
1879	National	LM1879	3318-33
	RCA	**CDP1879**	**★1673**
			★1679
			1452-33
			¶ 356-16
		CDP1879C-1	**★1673**
			★1679
			1452-34
188	Cherry	CS188	3405-20
	DY-4	DSTD-188	2019-25
	Intel	iSBC188/48	2011-2
	Intersil	**DG188A**	**★3196**
			2825-45
			2825-49
		DG188B	**★3196**
			2825-54
			2825-58
		DGM188	**★3196**
		IH188C	2825-55
			2825-59
		IH188M	2825-46
			2825-50
	National	AM188	2825-44
			2825-48
	SiliconSys	**SSI188**	**★3736**
			2896-80
	Siliconix	**DG188A**	**★3223**
			2825-47
			2825-51
		DG188B	**★3223**
			2825-57
			2825-61
			(Continued)
188	Slicer	SL188	2015-17
	TI	**MIL-STD-188**	**★ 722**
1880	National	LM1880	3325-104
1881	**RCA**	**CDP1881**	**★1673**
			★1676
			★1679
			1451-123
		CDP1881C	**★1673**
			★1676
			★1679
			1451-124
1882	**RCA**	**CDP1882**	**★1673**
			★1676
			★1679
			1451-125
			1452-107
		CDP1882C	**★1673**
			★1676
			★1679
			1451-126
			1452-108
1883	**RCA**	**CDP1883**	**★1673**
			★1676
			★1679
			1451-127
			1452-109
		CDP1883C	**★1673**
			★1676
			★1679
			1452-110
1884	National	LM1884	3326-91
1886	National	LM1886	3327-24
1889	National	LM1889	3327-25
			3327-125
189	Cherry	CS189	3328-46
	Intersil	**DG189A**	**★3196**
			2826-1
			2826-5
		DG189B	**★3196**
			2826-2
			2826-6
		DGM189	**★3196**
	Siliconix	**DG189A**	**★3223**
			2826-3
			2826-7
		DG189B	**★3223**
			2826-4
			2826-8
1890	RCA	CA1890	3326-19
1893	National	LM1893	3406-2
1894	National	LM1894	3316-169
			¶ 416-1
			¶ 416-6
			¶ 416-10
1895	National	LM1895	3318-180
1896	National	LM1896	3318-181
1897	National	LM1897	3319-45
			¶ 409-8
			¶ 416-9
18A02	Lambda	LAS18A02	3389-125
18A05	Lambda	LAS18A05	3390-43
18A052	Lambda	LAS18A052	3390-74
18A06	Lambda	LAS18A06	3390-95
18A08	Lambda	LAS18A08	3390-124
18A10	Lambda	LAS18A10	3391-5
18A12	Lambda	LAS18A12	3391-50
18A15	Lambda	LAS18A15	3391-116
18A18	Lambda	LAS18A18	3392-16
18A20	Lambda	LAS18A20	3392-35
18A24	Lambda	LAS18A24	3392-58
18CP8	Hyundai	HY18CP8	4470-17
	ICT	18CP8	4469-28
18H4	Lattice	RAL18H4-15	4467-84
		RAL18H4-15L	4467-85
		RAL18H4-25	4468-46
		RAL18H4-25L	4468-47
		RAL18H4-35	4468-134
		RAL18H4-35L	4468-135
	TI	TIBPAL18H4	4469-44
18L4	Lattice	RAL18L4-15	4467-86
		RAL18L4-15L	4467-87
		RAL18L4-25	4468-48
		RAL18L4-25L	4468-49
		RAL18L4-35	4468-136
		RAL18L4-35L	4469-1
	MMI	HAL18L4C	4475-108
		HAL18L4M	4476-3
		PAL18L4C	**★4682**
			4472-25
		PAL18L4M	**★4682**
			4472-56
	National	PAL18L4C	4472-38
		PAL18L4M	4472-39
	TI	TIBPAL18L4	4469-45
18P4	Lattice	RAL18P4-15	4467-88
		RAL18P4-15L	4467-89
		RAL18P4-25	4468-50
		RAL18P4-25L	4468-51
		RAL18P4-35	4469-2
		RAL18P4-35L	4469-3
	TI	TIBPAL18P4	4469-46
18P8	AMD	AMPAL18P8AC	4470-5
		AMPAL18P8ALC	4470-6
		AMPAL18P8ALM	4470-73
		AMPAL18P8AM	4470-74
		AMPAL18P8BC	4469-67
		AMPAL18P8BM	4469-99
		AMPAL18P8LC	4471-40
		AMPAL18P8UC	4471-41
		AMPAL18P80M	4472-13
	Signetics	**PLHS18P8**	**★4154**
			4469-56
18S005	RCA	CDP18S005	¶ 376-12
			¶ 378-11
18S007	RCA	CDP18S007	¶ 376-12
			¶ 378-11
18S008	RCA	CDP18S008	1819-17
			¶ 376-12
18S02	RCA	18S02	¶ 385-4
18S020	RCA	CDP18S020	¶ 378-11
			¶ 394-14
18S024	RCA	CDP18S024	¶ 378-11
18S025	RCA	CDP18S025	¶ 378-11
18S030	**TI**	**TBP18S030**	**★ 729**
			3814-43
		TBP18S030M	**★ 729**
			3814-57
18S480	RCA	CDP18S480	¶ 437-2
18S600	RCA	CDP18S600	2009-1
18S601	RCA	CDP18S601A	2009-6
18S602	RCA	CDP18S602	2009-4
18S603	RCA	CDP18S603A	2009-7
18S604	RCA	CDP18S604B	2009-8
18S605	RCA	CDP18S605	2009-5
18S606	RCA	CDP18S606	2009-10
18S607	RCA	CDP18S607	2009-9
18S608	RCA	CDP18S608	2009-11
18S609	RCA	CDP18S609	2009-12
18S610	RCA	CDP18S610	2009-13

Arranged alphanumerically from left to right.

Base Number	Source	Device	Page-Line
18S620	RCA	CDP18S620	2033-45
18S621	RCA	CDP18S621	2033-49
18S622	RCA	CDP18S622	2033-47
			¶ 383-7
18S623	RCA	CDP18S623A	2033-46
18S625	RCA	CDP18S625	2033-48
18S626	RCA	CDP18S626	2033-51
18S627	RCA	CDP18S627	2033-44
18S629	RCA	CDP18S629	2033-50
18S640	RCA	CDP18S640A	2033-38
18S640A1	RCA	CDP18S640A1	2033-39
18S641	RCA	CDP18S641	2033-40
			¶ 385-4
18S642	RCA	CDP18S642	2033-32
18S643	RCA	CDP18S643A	2033-28
18S644	RCA	CDP18S644	2033-26
			¶ 385-4
18S646	RCA	CDP18S646	2033-42
18S647	RCA	CDP18S647	2033-30
18S648	RCA	CDP18S648	2033-29
18S650	RCA	CDP18S650	2033-33
18S651	RCA	CDP18S651	2033-24
18S652	RCA	CDP18S652	2033-53
18S653V1	RCA	CDP18S653V1	2033-35
18S653V2	RCA	CDP18S653V2	2033-34
18S653V3	RCA	CDP18S653V3	2033-37
18S653V4	RCA	CDP18S653V4	2033-36
18S654	RCA	CDP18S654	2033-25
18S657	RCA	CDP18S657	2033-31
18S658	RCA	CDP18S658	2033-27
18S660	RCA	CDP18S660	2033-52
18S661	RCA	CDP18S661	¶ 385-4
18S662	RCA	CDP18S662	2033-43
18S663	RCA	CDP18S663	2033-41
18S691	RCA	CDP18S691	¶ 378-11
18S693	RCA	CDP18S693	1819-18
			¶ 385-4
18S694	RCA	CDP18S694	1819-19
18S695	RCA	CDP18S695	1819-20
18SA030	TI	TBP18SA030	3814-41
			3814-52
18U42	RCA	CDP18U42	¶ 437-4
19	Lambda	LAS19U	3392-115
	Wintek	**MRR19**	★ **2118**
			2037-32
190	**Intersil**	**DG190A**	★ **3196**
			2826-9
			2826-14
		DG190B	★ **3196**
			2826-10
			2826-15
		DGM190	★ **3196**
		IH190M	2826-11
			2826-16
	National	AM190	2826-12
			2826-17
	SGS	M190	2880-3
	Siliconix	**DG190A**	★ **3223**
			2826-13
			2826-18
		DG190B	★ **3223**
			2826-19
			2826-21
1900	**Fairchild**	**FGC1900**	★ **4621**
			4442-19
	ITT	SAA1900	3321-10
	VTI	**VGC1900**	★ **4805**
			4458-10
1901	**Unitrode**	**UC1901**	★ **3740**
			3401-101
			¶ 425-4
		UC1901/883B	★ **3740**
			3401-102
1903	Unitrode	UC1903	3401-103
1904	SGS	TDA1904	3318-64
1905	Lambda	LAS1905	3385-55
			¶ 427-12
	SGS	TDA1905	3316-223
1906	**Unitrode**	**UC1906**	★ **3740**
			3319-133
1908	SGS	TDA1908	3316-224
		TDA1908A	3316-225
191	Cherry	CS191	3401-139
	Intersil	**DG191A**	★ **3196**
			2826-24
			2826-28
		DG191B	★ **3196**
			2826-31
			2826-35
		DGM191	★ **3196**
		IH191C	2826-32
			2826-36
		IH191M	2826-25
			2826-29
	National	AM191	2826-23
			2826-27
	SGS	M191	3325-162
	Siliconix	**DG191A**	★ **3223**
			2826-26
			2826-30
		DG191B	★ **3223**
			2826-34
			2826-38
	Telefunken	U191	3324-120
1910	SGS	TDA1910	3316-226
19100	DDC	SDC-19100	3403-122
1912	Lambda	LAS1912	3387-92
			¶ 427-12
1913	NEC	μPD1913	3323-19
1914	Analogic	MP1914A	2870-35
		MP1914TC	2870-36
1915	Analogic	MP1915A	2871-19
		MP1915TC	2871-20
	Lambda	LAS1915	3388-83
1916	Analogic	MP1916A	2871-32
		MP1916TC	2871-33
19190	DDC	RDC-19190	3403-130
19191	DDC	RDC-19191	3403-131
19192	DDC	RDC-19192	3403-132
19193	DDC	RDC-19193	3403-134
19194	DDC	XDC-19194	3403-126
19195	DDC	XDC-19195	3403-127
19196	DDC	XDC-19196	3403-128
19197	DDC	XDC-19197	3403-129
19198	DDC	RDC-19198	3403-133
19199	DDC	RDC-19199	3403-135
192	National	LM192	3307-62
			3363-75
	SGS	M192	3325-163
19200	DDC	DRC19200	844-113
		RDC-19200	3403-136
	ThomsonCSF	SFF19200	3378-128
19209	Hitachi	HA19209	2834-48
19210	Hitachi	HA19210	2834-49
19216	Hitachi	HA19216	2833-17
1926	Analogic	MP1926A	2871-23
		MP1926S	2871-24
193	**Motorola**	**LM193**	★ **3631**
			3314-25
		LM193A	★ **3631**
			3313-47
	National	AM193	2824-78
		LM193	3314-26
		LM193A	3313-48
	SGS	LM193	3314-27
		LM193A	3313-49
		M193	3326-10
			¶ 441-4
	Signetics	**LM193**	★ **3725**
			3314-28
		LM193A	★ **3725**
			3313-50
	TI	**LM193**	★ **719**
			3314-29
	ThomsonCSF	LM193	3314-30
1935	**VTI**	**VL1935**	★ **1751**
			★ **1752**
			★ **1757**
			1468-54
1936	Analogic	MP1936	2871-22
1937	NEC	μPD1937	3322-170
1938	NEC	MC1938	3378-20
194	National	AM194	2824-90
		LM194	3309-120
	SGS	L194-12	3387-2
		L194-15	3388-3
		L194-5	3384-43
1940	Telefunken	TDA1940	3325-133
1943	NEC	μPD1943	3323-20
	Western	WD1943	890-12
		WD1943-00	2900-36
		WD1943-02	2900-37
		WD1943-04	2900-39
		WD1943-05	2900-38
		WD1943-06	2900-40
1945	Western	WD1945	2900-51
1949	National	LM1949	3319-127
195	National	LM195	3398-90
	Unitrode	LM195	3309-85
1950	ITT	TDA1950	3325-115
	Telefunken	TDA1950	3325-134
196	Micropac	MLM196-05	3385-68
		MLM196-12	3387-98
		MLM196-15	3388-88
	National	LM196	3392-100
1962	NEC	μPD1962	3320-91
1963	NEC	μPD1963	3320-92
1965	National	LM1965	3322-66
197	AnalogSys	MW197	3383-15
198	AMD	LF198	3403-149
	Fairchild	μA198M	3404-9
	LinearTech	LF198	3404-32
		LF198A	3404-33
	National	LF198	3404-47
		LF198A	3404-48
	Signetics	**LF198**	★ **3725**
			3404-75
1981	National	LM1981	3321-48
1983	Western	TR1983	1457-87
1986	NEC	μPD1986	3323-21
1987	NEC	μPD1987	3323-1
199	AD	HOS-199SH	3306-45
	LinearTech	LM199	3402-158
		LM199A	3402-146
	National	LM199	3402-149
			¶ 428-1
			¶ 429-5
		LM199A	3402-150
			¶ 429-5
1990	NEC	μPD1990A	1469-105
19A05	Lambda	LAS19A05	3385-56
19A12	Lambda	LAS19A12	3387-93
19A15	Lambda	LAS19A15	3388-84
19L8	**TI**	**TIBPALR19L8-XX**	
			★ **725**
			★ **4770**
			4469-85
			(Continued)
19L8	**TI**	**TIBPALT19L8-XX**	
			★ **725**
			★ **4779**
			4469-89
19R4	**TI**	**TIBPALR19R4-XX**	
			★ **725**
			★ **4770**
			4469-86
		TIBPALT19R4-XX	
			★ **725**
			★ **4779**
			4469-90
19R6	**TI**	**TIBPALR19R6-XX**	
			★ **725**
			★ **4770**
			4469-87
		TIBPALT19R6-XX	
			★ **725**
			★ **4779**
			4469-91
19R8	TI	TIBPAL19R8-XX	4469-84
		TIBPALR19R8-XX	
			★ **725**
			★ **4770**
			4469-88
		TIBPALT19R8-XX	
			★ **725**
			★ **4779**
			4469-92
1MX8	**Dense-Pac**	**DPE1MX8**	★ **4008**
			3813-112
			3813-113
1S14	AD	1S14	3403-83
1S20	AD	1S20	3403-84
1S24	AD	1S24	3403-85
1S40	AD	1S40	3403-86
1S44	AD	1S44	3403-87
1S60	AD	1S60	3403-88
			¶ 392-5
1S61	AD	1S61	3403-89
1S64	AD	1S64	3403-90
			¶ 394-8
1S74	AD	1S74	3403-91
			¶ 389-14
			¶ 394-8
2	Altera	PLE2	5040-67
	AMA	**EZ-PRO 2-1**	★ **1901**
			1811-1
	Basicon	MC-2N	2021-22
	CharlesRiver	CM-2MB	2043-18
	Comark	Disktor M-2	1811-13
	CompVision	CADDS 2/VLSI	5000-1
			5045-73
	Cromemco	Z-2H	1811-21
	CIC	MSB-2	4462-26
	dataCon	WRAPID 2	5038-3
			5048-13
	Datel	**FLT-U2**	★ **3163**
			3398-22
		SHM-LM-2	★ **3163**
			3404-8
	Datricon	ACS-2A	2017-23
	DYSYS	BRICK-2	2011-31
	Emulogic	EMUNET-2	1813-9
	ENDOT	N(dot)2	5037-2
	Ferranti	Erica 2	4956-2
		ZNPCM2	3378-34
	Force	ASCU-2	2044-35
		CPU-2	2027-14
		DRAM-2	2045-22
		SRAM-2	2045-17
	FutureNet	DASH-2	5049-43
		DASH-2 EDITOR	4916-2
		DASH-2 STRIDES	4916-3
	GouldAMI	UA-2	4446-8
	IndComp	SMCC-2	2037-9
	IntSolutions	IS-QIC2	2033-19
		VME-QIC2	2043-53
	Intel	SYSMB2	2021-39
	Interdesign	ULA2C	4442-43
			4442-46
		ULA2G	4462-47
		ULA2L	4463-4
			(Continued)

¶ Indicates page number in Application Note Directory.

★ Indicates additional data is provided on the page noted.

Base Number	Source	Device	Page-Line
2	Interdesign	ULA2M	4443-1
		ULA2N	4442-44
			4442-45
		ULA2U	4463-5
	IXYS	XVS-2	3306-22
	LMS	**NVR2**	★**4100**
			3812-33
			3839-26
	Matrix	CP2	2019-2
	Mostek	Highland 2	4925-3
		MDX-CPU2	¶ 379-13
		MDX-CPU2A	2019-34
	Octagon	SYS-2A	2023-9
	OKI	**SAS-2**	★**4733**
	PCAD	CAE-2	4927-2
		PCB-2	4928-2
			4986-1
	PlesseyMicro	PME 2EP	2045-38
		PME DB2EA	2045-34
		PME DB2EP	2045-35
	Plessey	PME-2EP	2045-58
		PME-DB2EA	2045-55
		PME-DB2EP	2045-57
		PSM-2A	2036-54
		PSM-2DA	2036-52
		PSM-2P	2036-53
	Quantic	GREENFIELD 2	5036-2
	RCA	**PaCMOS-2**	★**4742**
			4481-11
		PaCMOS-C2L	★**4742**
			4481-13
		SOS-2 Library	★**4742**
			4481-14
	Signetics	CCL-2	4455-7
		EPL-2	4481-22
	STC	MSIV-2	4465-4
	Supertex	SD2	3328-21
	Tatum	ECA-2	4945-3
		LSS-2	4960-2
	Tektronix	**QuickChip 2**	★**4756**
			844-105
		QuickChip 2S	★**4756**
			4465-9
			844-106
	TeledyneC	CDA2-3	2822-112
	TLSI	TA-2	4456-22
	Torric	UA2	4456-37
	Vatic	**BA2**	★**4804**
			4457-46
		HC2	★**4804**
			4482-13
		MB2	4457-48
		MC2	★**4804**
			4458-5
	VersaLogic	IPI-2	2041-2
		SIO-2A	2041-8
		SIO-2B	2041-7
	Vesta	ipc-DISK-2	2039-13
	WinSystems	LPM-CLK-2	2040-7
		LPM-CPU2-A	2017-12
		MCM-CPU2	2017-14
		MCM-SBC2	2017-16
	Ziatech	LPM-CPU2-A	2017-13
2148	AMD	AM2148-55M	3836-1
20	Altera	PLE20	5040-73
	Burr-Brown	**MP20**	★**3148**
			2837-35
			¶ 364-15
			¶ 377-11
			1457-73
			1460-12
			1460-83
			1469-50
	Datel	**SHM-20C**	★**3159**
			★**3163**
			3403-182
		SHM-20M	★**3159**
			★**3163**
			3403-183
	Ferranti	ULA20RD	4443-50
	Harris	OP-20	¶ 407-4
	IntCirSys	IMC-20W	4463-16
	IntMicCir	IMC-20A	4463-20
		IMC-20B	4463-26
			(Continued)
20	IntMicCir	IMC-20C	4463-17
		IMC-20E	4463-22
		IMC-20F	4463-28
		IMC-20G	4463-23
		IMC-20H	4463-24
		IMC-20J	4463-21
		IMC-20L	4463-27
		IMC-20M	4463-30
		IMC-20W	4463-29
	Interdesign	ULA20DS	4443-41
		ULA20RA	4443-42
		ULA20RB	4443-43
		ULA20RC	4443-45
		ULA20RD	4443-49
	MCE	MCEA20A	4464-14
		MCEA20AS	4464-15
		MCEA20B	4464-26
		MCEA20BS	4464-27
		MCEA20C	4464-9
		MCEA20CS	4464-10
		MCEA20E	4464-18
		MCEA20ES	4464-19
		MCEA20F	4464-30
		MCEA20FS	4464-31
		MCEA20G	4464-20
		MCEA20GS	4464-21
		MCEA20H	4464-22
		MCEA20HS	4464-23
		MCEA20J	4464-16
		MCEA20JS	4464-17
		MCEA20L	4464-28
		MCEA20LS	4464-29
		MCEA20M	4464-33
		MCEA20MS	4464-34
		MCEA20WS	4464-32
		MCEP20A	4464-8
	National	PAL 20B Series	¶ 445-6
	PMI	DAC-20	¶ 388-12
			¶ 390-19
			¶ 393-12
		DAC-20C	2856-12
		DAC20	★**3637**
		OP-20	¶ 407-3
		OP-20B	★**3636**
			3333-5
			3334-95
			3338-56
		OP-20C	★**3636**
			3333-6
			3334-96
			3340-33
		OP-20F	★**3636**
			3333-7
			3334-97
			3338-57
		OP-20G	★**3636**
			3333-8
			3334-98
			3340-34
		OP-20H	★**3636**
			3333-9
			3334-99
			3340-76
	Telesis	EDA-20 Personal W/S	4925-1
	VTI	VP20PX	4474-47
	Wintek	**MAI20**	★**2118**
			2037-12
	Ziatech	xSBX 20	2037-2
200	AD	ADG200A	2822-59
		ADG200B	2822-76
		ADG200C	2822-77
	Burr-Brown	**PGA200**	★**3150**
			3306-118
	CalDevices	**CHA200**	★**4610**
			4440-15
		DLM200	★**4605**
			4440-16
	Comlinear	CLC200A	3307-142
			3348-100
			3331-6
			3330-116
			3334-265
		CLC200AI	3354-24
			(Continued)
200	Comlinear	CLC200AM	3307-143
			3348-101
			3331-7
			3330-117
			3334-266
			3354-25
	Exar	**XR200**	★**4615**
			★**4618**
			4442-3
		XRS200	3375-66
			¶ 423-14
	Fairchild	CET200	3378-124
	Harris	HI-200	¶ 401-10
		HI200-2	2822-60
		HI200-5	2822-78
	Intersil	**DG200**	★**3196**
			2822-66
		DG200C	★**3196**
			2822-74
		DG200M	★**3196**
			2822-57
		IH200C	2822-71
		IH200M	2822-67
	Kontron	KPS-200	1817-9
	MicroPwr	**MP200DIA**	★**3207**
			2822-61
		MP200DIB	★**3207**
			2822-79
		MP200DIC	★**3207**
			2822-80
	Mitchell	MIE-200A	2017-5
		MIE200	2015-23
	Motorola	**HDS-200**	★**1904**
			1817-21
	Sahni	LA200	4454-26
	SGS	L200	3392-112
			¶ 427-2
			¶ 427-6
	Sharp	SM200	1450-70
			1411-28
	Signetics	**OM200**	★**3729**
			3316-101
	Siliconix	DG200	¶ 402-16
		DG200AA	★**3223**
			2822-62
		DG200AB	★**3223**
			2822-81
		DG200AC	★**3223**
			2822-82
	ThomsonCSF	TDA200	3393-67
	Zycad	**Expediter 200**	★**5122**
2000	AMD	S2000	¶ 375-11
		S2000/S2150	¶ 375-12
	CalDevices	CDI2000	4440-14
	CharlesRiver	VCP-2000	2029-12
	Cherry	CS2000E	4462-10
	Fairchild	**FGE2000**	★**4621**
			4442-20
			¶ 443-10
	Faraday	FE2000	1465-55
	Fujitsu	**B2000**	★**4625**
			4444-37
		C2000AVB	★**4624**
			4445-1
		C2000H	★**4624**
			4444-36
	GouldAMI	**GA2000D**	★**4632**
			★**4632**
			4446-17
		GB2000D	★**4632**
			4446-18
		S2000	¶ 364-6
			¶ 366-8
			¶ 366-11
			¶ 366-12
			¶ 381-11
		S2000/2150	¶ 366-9
	Honeywell	HE2000	4447-16
			¶ 443-13
			¶ 443-14
	HyComp	M/DA2000	2865-49
	Intech	ULN-2000A	¶ 398-17
	LSILogic	**LSA2000**	★**4676**
		LSA 2000	4480-6
	Matra	MA2000	4450-33
			(Continued)
2000	Matrox	CP-2000	2021-28
		FP-2000	2021-29
		MAP-2000	2029-27
		MB-2000	2036-55
		NAP-2000	2029-24
	Mostek	GB2000D	4451-20
		MKGA2000D	★**4715**
			4451-19
		MKGB2000D	★**4716**
			4451-21
	NCM	2000 Series	4480-23
	Plessey	BAA2000	4464-39
	RCA	MS2000	1819-21
		MS2000-Z	1821-1
	Rockwell	R2000	3811-30
	Siemens	TUA2000	3327-3
	Signetics	SMVME2000	2027-21
		TEA2000	★**3731**
	SSM	SSM2000	3307-1
			¶ 422-12
	Sprague	ULN-2000A	¶ 399-2
	Telefunken	U2000	3320-38
	TI	TAC2000H	4456-16
		THCT2000	★**1355**
	TLSI	TA-2000	4456-31
		TA-2000D	4456-32
	Torric	GA2000D	4456-43
	Vectron	DNA 2000	4980-3
			5067-85
	VTC	**VL2000**	★**4820**
			4482-24
			¶ 445-19
	Zuken	C2000	4943-2
			4879-1
20000	Fujitsu	UH20000	4445-16
	GESemi	**IGC20000**	★**4630**
		ISC20000	★**4626**
			4478-23
	Honeywell	HC20000	4447-22
	Intersil	ISC20000	4478-21
	ZyMOS	Zy20000	4482-28
2000B1	Vatic	M2000B1	4457-49
2001	Exar	XR2001C	3310-86
	Intel	**2001**	★**4067**
			3811-53
			¶ 437-10
		2001-2	★**4067**
			3811-47
	Motorola	**ULN2001**	★**3212**
	National	LM2001	3318-34
	NCM	2001Z	3326-97
	SGS	ULN2001A	2894-107
	SiliconG	SG2001	2894-108
			3310-126
	Siliconix	VQ2001	2898-74
	Sprague	**ULN-2001**	★**3269**
		ULN-2001A	2894-112
			¶ 399-3
			3310-132
		ULS-2001	2894-115
			3310-137
	Western	WD2001	890-67
	Xicor	**X2001**	★**4277**
			3811-54
			¶ 432-16
		X2001-20	★**4277**
			3811-48
		X2001-25	★**4277**
			3811-66
2002	Aptek	AMS2002	3381-54
			¶ 396-5
	Exar	XR2002C	3310-87
	Hitachi	TDA2002	3316-194
	Motorola	TDA2002	3316-195
			(Continued)

Arranged alphanumerically from left to right.

PART NUMBER INDEX

Base Number	Source	Device	Page-Line
2002	Motorola	TDA2002A	3316-196
		ULN2002	★**3212**
	National	LM2002	3316-197
		TDA2002	3316-201
		TDA2002A	3316-202
	NCM	2002Z	3324-59
	NEC	μPC2002	3316-207
	SGS	TDA2002	3316-227
		TDA2002A	3316-228
		ULN2002A	3318-3
	SiliconG	SG2002	2894-126
			3310-127
	Sprague	TDA2002	3318-8
		TDA2002A	3318-9
		ULN-2002A	★**3269**
			2894-130
			¶ 399-3
			3310-133
		ULS-2002	2894-133
			3310-138
	Western	WD2002	890-68
	Xicor	**X2002**	★**4277**
			3811-72
			¶ 432-16
		X2002-20	★**4277**
			3811-67
		X2002-25	★**4277**
			3811-70
2003	**Elantec**	**EL2003**	★**3537**
			★**3539**
			3308-28
	Exar	XR2003C	3310-88
		XR2003M	2894-72
	Motorola	**ULN2003**	★**3212**
	National	TDA2003	3316-203
	SGS	TDA2003	3318-1
		ULN2003A	2894-79
	Signetics	**ULN2003**	★**3721**
			2894-80
			3310-124
	SiliconG	SG2003	2894-81
			3310-128
	Sprague	TDA2003	3318-10
		ULN-2003A	★**3269**
			2894-88
			¶ 399-3
			3310-134
		ULS-2003	2894-94
			3310-139
	STI	STI-2003	843-82
			3375-31
	TeledyneP	2003	3306-39
	Telefunken	TDA2003	3318-18
	TI	TZ2003	3378-39
	ThomsonCSF	TDA2003	3318-24
20030	GESemi	IGC20030	4445-18
2004	**Elantec**	**EL2004**	★**3537**
			★**3540**
			3357-30
		EL2004C	★**3537**
			★**3540**
			3357-154
	Exar	XR2004C	3310-89
	Intel	2004	3811-84
			¶ 433-13
			¶ 438-15
		2004-2	3811-78
		2004-3	3811-93
	MicroPwr	**MP2004**	★**3607**
			3357-31
	Motorola	**ULN2004**	★**3212**
	SGS	TDA2004	3318-164
		ULN2004A	2894-60
	Signetics	**ULN2004**	★**3721**
			2894-61
			3310-125
	SiliconG	SG2004	2894-62
	Siliconix	VQ2004	2898-75
	Sprague	**ULN-2004A**	★**3269**
			2894-65
			¶ 399-3
			3310-135
		ULS-2004	2894-68
			3310-140
	Xicor	**X2004**	★ **735**
			★**4277**
			(Continued)
2004	Xicor	X2004	3811-94
			¶ 432-16
		X2004-20	★ **735**
			★**4277**
			3811-79
		X2004-25	★ **735**
			★**4277**
			3811-86
		X2004M	★ **735**
			★**4277**
			3811-95
		X2004M-25	★ **735**
			★**4277**
			3811-87
2005	**Elantec**	**EL2005**	★**3537**
			★**3541**
			3351-13
		EL2005C	★**3537**
			★**3541**
			3357-12
	HyComp	M/D2005-1	2857-43
		M/DA2005	2867-36
	National	LM2005	3318-100
			3319-148
	NEC	μPC2005	3318-199
	SGS	TDA2005	3318-165
	Siemens	SDA2005	3326-3
	SiliconG	SG2005	2894-82
	Sprague	**ULN-2005A**	★**3269**
			2894-89
			3310-136
		ULS-2005	2894-95
			3310-141
2006	Aptek	AMS2006	3381-55
	Elantec	**EL2006**	★**3537**
			★**3542**
			3346-27
		EL2006C	★**3537**
			★**3542**
			3352-9
	NEC	μPD2006	3320-93
	SGS	TDA2006	3318-2
	Siliconix	VQ2006	2898-76
	Telefunken	TDA2006	3318-19
	ThomsonCSF	TDA2006	3318-25
2007	**Elantec**	**EL2007**	★**3537**
			★**3543**
			2895-123
2008	SGS	TDA2008	3318-131
	Sprague	TDA2008	3318-11
			3318-141
2009	**Elantec**	**EL2009**	★**3537**
			3357-32
		EL2009C	★**3537**
			3357-161
	ILSI	**CA-2009**	★**4664**
			4448-2
	NCM	2009Z	3320-110
	SGS	TDA2009	3318-132
	TRW-LSI	TMC2009	843-90
201	AD	AD201A	3346-108
		ADG201A	★**3144**
			2823-57
		ADG201B	★**3144**
			2823-75
		ADG201C	★**3144**
			2823-76
	Analogic	MP201A	3316-134
	Burr-Brown	**OPA201A**	★**3149**
			3343-17
		OPA201B	★**3149**
			3340-35
		OPA201C	★**3149**
			3339-5
		OPA201S	★**3149**
			3340-36
		PGA201	★**3150**
			3306-119
	DY-4	DSTD-201	2041-21
		DVME-201	2045-4
	Fairchild	μA201AM	3346-110
		μA201C	3356-33
	Harris	HI-201	¶ 401-10
		HI-201HS	¶ 402-14
		HI201-2	2823-58
		HI201-5	2823-77
			(Continued)
201	Harris	HI201HS-2	2823-40
		HI201HS-5	2823-41
	Intersil	**DG201C**	★**3196**
			2823-65
		DG201M	★**3196**
			2823-54
		IH201C	2823-50
		IH201M	2823-44
	LTI	LA201	4464-5
	Maxim	DG201C	2823-67
		DG201M	2823-56
	MicroPwr	**MP201DIA**	★**3207**
			2823-48
		MP201DIB	★**3207**
			2823-49
	Motorola	**LM201A**	★**3615**
			3346-112
		MVME201	★**2110**
			2045-14
	National	CIM-201	2030-25
		LM201	3356-34
		LM201A	3346-114
	PMI	SW-201B	2824-74
			2824-99
		SW-201F	2824-76
			2824-105
		SW-201G	2827-98
	RCA	**CA201**	★**3672**
		GP201AD	1449-121
	SGS	L201	2894-106
			3310-120
		LM201A	3346-96
	Siemens	FZH201	852-13
	SiliconG	SG201	3356-35
		SG201A	3346-117
	SiliconSys	**SSI201**	★**3737**
			3382-9
			¶ 412-12
	Siliconix	**DG201AA**	★**3223**
			2823-91
		DG201AB	★**3223**
			2823-96
		DG201AC	★**3223**
			2823-97
	TauZero	CPU201	2025-22
	TI	TC201	3400-4
	ThomsonCSF	LM201A	3346-118
2010	CTI	MA2010	4441-30
	SGS	TDA2010	3318-133
			¶ 409-7
	SSM	SSM2010	3306-139
	Technitrol	MEDM-2010	1458-26
	TRW-LSI	TMC2010	843-106
	VersaLogic	2010	2040-13
	VTI	**VL2010**	★**1751**
			★**1752**
			★**1771**
			843-109
	Weitek	WTL2010	843-111
		WTL2010C	808-24
		WTL2010M	808-25
	Western	WD2010	1468-97
20100	GESemi	IGC20100	4445-21
2011	Exar	XR2011C	3310-90
	iLSi	CA2011	4448-3
	Motorola	**MBK2011**	★**4125**
		MBM2011A	★**4125**
			3826-6
		MPC2011	3401-26
	SiliconG	SG2011	2894-109
	SSM	SSM2011	3324-30
	Sprague	**ULN-2011A**	★**3269**
			2894-113
			3310-144
		ULS-2011	2894-116
			3310-149
2012	Cherry	CS2012	3401-18
	Exar	XR2012C	3310-91
	Motorola	MPC2012	3401-27
	SiliconG	SG2012	2894-127
	SSM	SSM2012	3306-140
	Sprague	**ULN-2012A**	★**3269**
			2894-131
			3310-145
		ULS-2012	2894-134
			3310-150
2013	CTI	MA2013	4441-32
	Exar	XR2013C	3310-92
	SiliconG	SG2013	2894-83
	SSM	SSM2013	3308-30
	Sprague	**ULN-2013A**	★**3269**
			2894-90
			3310-146
		ULS-2013	2894-96
			3310-151
2014	Exar	XR2014C	3310-93
	Motorola	MPC2014	3401-28
	Siemens	SDA2014	2874-108
	SiliconG	SG2014	2894-63
	SSM	SSM2014	3308-31
	Sprague	ULN-2014A	2894-66
			3310-147
		ULS-2014	2894-69
			3310-152
2015	**ILSI**	**CA-2015**	★**4664**
			4448-4
	Motorola	MPC2015	3401-29
	SiliconG	SG2015	2894-84
	SSM	SSM2015	3307-59
	Sprague	**ULN-2015A**	★**3269**
			2894-91
			3310-148
		ULS-2015	2894-97
			3310-153
	ThomsonCSF	TEA2015	3327-1
		TEA 2015A	¶ 417-11
	Toshiba	**TMM2015A-10**	★**4263**
			3838-7
		TMM2015A-12	★**4263**
			3838-43
		TMM2015A-15	★**4263**
			3838-95
		TMM2015A-90	★**4263**
			3837-110
		TMM2015B-10	★**4263**
			3838-8
		TMM2015B-12	★**4263**
			3838-44
		TMM2015B-15	★**4263**
			3838-96
		TMM2015B-90	★**4263**
			3837-111
2016	CTI	MA2016	4441-35
	Motorola	**MCM2016H-45**	★**4118**
			3837-62
		MCM2016H-55	★**4118**
			3837-83
		MCM2016H-70	★**4118**
			3837-98
	S-MOS	**SRM2016C-15**	★**4176**
			★**4178**
			3838-76
		SRM2016C-20	★**4176**
			★**4178**
			3838-122
		SRM2016C-25	★**4176**
			★**4178**
			3839-35
	Toshiba	**TMM2016-2**	★**4263**
			3839-23
		TMM2016A	★**4263**
			3838-97
		TMM2016A-1	★**4263**
			3838-9
		TMM2016A-10	★**4263**
			3838-10
		TMM2016A-12	★**4263**
			3838-45
		TMM2016A-15	★**4263**
			3838-98
		TMM2016A-2	★**4263**
			3839-24
		TMM2016A-90	★**4263**
			3837-112
		TMM2016B	★**4263**
			3838-99
		TMM2016B-1	★**4263**
			3838-11
		TMM2016B-10	★**4263**
			3838-12
		TMM2016B-12	★**4263**
			3838-46
			(Continued)

¶ Indicates page number in Application Note Directory.
★ Indicates additional data is provided on the page noted.

Base Number	Source	Device	Page-Line
2016	**Toshiba**	**TMM2016B-15**	★4263
			3838-100
		TMM2016B-90	★4263
			3837-113
2017	**Elantec**	**EL2017**	★3537
			★3543
			3404-102
	iLSi	CA2017	4448-6
	S-MOS	**SRM2017C-15**	★4176
			★4178
			3838-77
		SRM2017C-20	★4176
			★4178
			3838-123
		SRM2017C-25	★4176
			★4178
			3839-36
	SMC	COM2017	2901-63
	ThomsonCSF	TEA2017	3325-112
			¶ 417-17
2018	Motorola	MCM2018-35	3837-51
		MCM2018-45	3837-63
	S-MOS	**SRM2018C-15**	★4176
			★4178
			3838-78
		SRM2018C-20	★4176
			★4178
			3839-1
		SRM2018C-25	★4176
			★4178
			3839-37
	ThomsonCSF	TEA2018	3397-5
	Toshiba	**TMM2018-35**	★4263
			3837-52
		TMM2018-45	★4263
			3837-64
		TMM2018-55	★4263
			3837-84
2019	ThomsonCSF	TEA2019	3397-6
20190	GESemi	IGC20190	4445-23
202	**AD**	**ADG202**	★3144
	DY-4	DSTD-202	2040-70
	Inmos	IMST202	1435-18
	Intersil	IH202C	2823-51
		IH202M	2823-45
	LTI	LA202	4464-3
	MicroInds	MIB202	2034-20
	Motorola	**MVME202**	★2110
			2045-15
	National	LM202	3329-35
	PMI	SW-202B	2824-75
			2824-100
		SW-202F	2824-77
			2824-106
	SGS	L202	2894-125
			3310-121
	SiliconSys	**SSI202**	★3737
			3381-127
			3382-10
	Siliconix	**DG202A**	★3223
			2823-92
		DG202B	★3223
			2823-93
		DG202C	★3223
			2823-98
	TI	TC202	3400-5
2020	AD	AD2020	2846-14
	HybridSys	HS2020	3307-100
	iLSi	**CA-2020**	★4664
			4448-7
	MicroNet	**MN2020**	★3202
			3307-101
	SGS	TDA2020	3318-134
			¶ 409-7
		TDA2020D	3318-135
	Sharp	LZ2020	3400-91
	SSM	SSM2020	3307-2
			3321-13
			¶ 422-12
	Technitrol	MEDM-2020	1458-27
	ThomsonCSF	TEA2020	¶ 417-16
	TRW-LSI	TMC2020	891-110
2021	SiliconG	SG2021	2894-110
	Sprague	**ULN-2021A**	★3269
			2894-114
			3310-154
			(Continued)
2021	Sprague	ULS-2021	2894-117
			3310-159
	ThomsonCSF	TEA2021	3318-168
2022	iLSi	CA2022	4448-8
	SiliconG	SG2022	2894-128
	SSM	SSM2022	3307-3
			3321-14
	Sprague	**ULN-2022A**	★3269
			2894-132
			3310-155
		ULS-2022	2894-135
			3310-160
2023	SiliconG	SG2023	2894-85
	Sprague	**ULN-2023A**	★3269
			2894-92
			3310-156
		ULS-2023	2894-98
			3310-161
2024	CTI	MA2024	4441-37
	SiliconG	SG2024	2894-64
	SSM	SSM2024	3308-69
	Sprague	**ULN-2024A**	★3269
			2894-67
			3310-157
		ULS-2024	2894-70
			3310-162
	ThomsonCSF	TEA2024	3318-169
2025	SiliconG	SG2025	2894-86
	Sprague	**ULN-2025A**	★3269
			2894-93
			3310-158
		ULS-2025	2894-99
			3310-163
	ThomsonCSF	TEA2025	3318-193
2029	**iLSi**	**CA-2029**	★4664
			4448-10
	Telefunken	U2029	3319-125
20290	GESemi	IGC20290	4445-24
203	National	CIM-203	2030-21
	SGS	L203	2894-78
			3310-122
	SiliconSys	**SSI203**	★3737
			3381-128
			3382-11
2030	SGS	TDA2030	3318-136
		TDA2030A	3318-137
	SSM	SSM2030	3327-161
			¶ 416-4
	Telefunken	TDA2030	3318-142
	ThomsonCSF	TDA2030	3318-145
2031	iLSi	CA2031	4448-11
	SSM	SSM2031	3405-75
	Sprague	ULN-2031A	3310-80
2032	Sprague	ULN-2032A	3310-81
2033	SSM	SSM2033	3327-162
	Sprague	ULN-2033A	3310-82
2035	TeledyneP	2035	3306-47
2036	AD	AD2036	¶ 390-15
2038	CTI	MA2038	4441-39
	SSM	SSM2038	3319-102
2039	Aptek	AMS2039	3381-13
204	Intel	iSBC204	2031-43
	LTI	LA204	4464-2
	Motorola	**MVME204**	★2110
	National	LM204	3395-6
	SGS	L204	3310-123
		LS204	3363-38
		LS204A	3363-39
		LS204C	3363-73
	SiliconG	SG204	3395-8
	SiliconSys	**SSI204**	★3737
			3381-129
			3382-12
	ThomsonCSF	LM204	3395-11
		LS204	3363-72
2040	Aptek	AMS2040	3381-14
	SGS	TDA2040	3318-138
	SSM	SSM2040	3327-159
			¶ 416-4
2041	Aptek	AMS2041	3381-15
	Raytheon	RC2041	3363-67
2042	Aptek	AMS2042	3381-16
	iLSi	**CA-2042**	★4664
			4448-13
2043	Raytheon	RC2043	3363-69
2044	iLSi	CA2044	4448-15
	SSM	SSM2044	3327-160
	VTI	**VL2044**	★1751
			★1752
			★1771
			843-110
	Weitek	WTL2044C	808-28
		WTL2044M	808-29
2045	SSM	SSM2045	3316-149
	Sprague	ULS-2045H	3309-38
20450	GESemi	IGC20450	4445-25
2046	Sprague	ULN-2046A	3309-36
2047	SGS	ULN2047B	2897-164
	Sprague	ULN-2047A	3310-30
2048	CharlesRiver	CM-2048	2043-19
		VEM-2048	2045-36
	Reticon	RL2048H	3400-32
	Siemens	TDA2048	3327-55
205	Exar	XR205	3376-35
	Motorola	**MVME205**	★2110
	National	LM205	3394-12
	SiliconG	SG205	3394-14
	TauZero	CPU205	2013-2
	ThomsonCSF	LM205	3394-16
2050	SSM	SSM2050	3328-1
			¶ 416-4
	Technitrol	MEDM-2050	1458-28
2051	GI	ER2051	3811-18
		ER2051HR	3811-19
2054	**iLSi**	**CA-2054**	★4664
			4448-17
	SGS	TDA2054	3324-29
	Sprague	ULN-2054A	3309-95
2055	GI	ER2055	3811-32
			¶ 436-2
	SSM	SSM2055	3328-2
2056	SSM	SSM2056	3328-3
2057	iLSi	CA2057	4448-18
206	National	LM206	3312-28
	SGS	M206	3324-45
	TauZero	CPU206	2013-3
2061	**Sprague**	**ULN-2061M**	★3269
			2896-110
			3309-90
2062	**Sprague**	**ULN-2062M**	★3269
			2896-111
			3309-91
20620	GESemi	IGC20620	4445-26
2063	**Toshiba**	**TMM2063-10**	★4263
			3843-29
		TMM2063-12	★4263
			3843-54
		TMM2063-15	★4263
			3843-80
2064	**IPS**	**IP2064**	★3599
			2897-152
	S-MOS	**SRM2064C-120**	★4178
			3843-43
		SRM2064C-15	★4178
			3843-70
	SGS	ULN2064B	2897-165
	SiliconG	SG2064	2898-5
			3309-169
	Sprague	**ULN-2064B**	★3269
			2898-19
			3310-14
		ULS-2064H	2898-31
	Toshiba	**TMM2064-10**	★4263
			3843-30
		TMM2064-12	★4263
			3843-55
		TMM2064-15	★4263
			3843-81
2065	**IPS**	**IP2065**	★3599
			2897-153
	SGS	ULN2065B	2897-166
	SiliconG	SG2065	2898-6
			3309-170
	Sprague	**ULN-2065B**	★3269
			2898-20
			3310-15
		ULS-2065H	2898-32
2066	**iLSi**	**CA-2066**	★4664
			4448-20
	IPS	**IP2066**	★3599
			2897-154
			(Continued)
2066	SGS	ULN2066B	2897-167
	SiliconG	SG2066	2898-7
			3310-1
	Sprague	ULN-2066B	2898-21
			3310-16
		ULS-2066H	2898-33
2067	**IPS**	**IP2067**	★3599
			2897-155
	SGS	ULN2067B	2897-168
	SiliconG	SG2067	2898-8
			3310-2
	Sprague	ULN-2067B	2898-22
			3310-17
		ULS-2067H	2898-34
2068	CTI	MA2068	4441-41
	IPS	**IP2068**	★3599
			2897-156
	Motorola	**ULN2068**	★3212
			3309-166
	SGS	ULN2068B	2897-169
	SiliconG	SG2068	2898-9
			3310-3
	Sprague	ULN-2068B	2898-23
			3310-18
		ULS-2068H	2898-35
	Toshiba	**TMM2068-35**	★4263
			3841-46
		TMM2068-55	★4263
			3842-36
2069	**IPS**	**IP2069**	★3599
	SGS	ULN2069B	2897-170
	SiliconG	SG2069	2898-10
			3310-4
	Sprague	ULN-2069B	2898-24
			3310-19
		ULS-2069H	2898-36
207	AnalogSys	MA207	3346-207
	MicroPwr	**MPOP-207A**	★ 688
			★3607
			3357-197
		MPOP-207B	★ 688
			★3607
			3361-16
		MPOP-207E	★ 688
			★3607
			3357-198
		MPOP-207F	★ 688
			★3607
			3361-17
	National	LM207	3346-100
	PMI	**OP-207A**	★3636
			3338-58
		OP-207B	★3636
			3338-59
		OP-207E	★3636
			3340-30
		OP-207F	★3636
			3340-31
	SiliconG	SG207	3346-102
	SiliconSys	**SSI207**	★3737
			3381-108
	ThomsonCSF	LM207	3346-105
2070	iLSi	CA2070	4448-21
	IPS	**IP2070**	★3599
			2897-157
	SGS	ULN2070B	2897-171
	SiliconG	SG2070	2898-11
			3310-5
	Sprague	ULN-2070B	2898-25
			3310-20
		ULS-2070H	2898-37
2071	**IPS**	**IP2071**	★3599
			2897-158
	SGS	ULN2071B	2898-1
	SiliconG	SG2071	2898-12
	Sprague	ULN-2071B	2898-26
			3310-21
		ULS-2071H	2898-38
2072	SiliconG	SG2072	2898-13
			3310-6
2073	SiliconG	SG2073	2898-14
			3310-7
2074	**IPS**	**IP2074**	★3599
			2897-159
	Motorola	**ULN2074**	★3212
			3309-167
			(Continued)

Arranged alphanumerically from left to right.

PART NUMBER INDEX

Base Number	Source	Device	Page-Line
2074	SiliconG	SG2074	2898-15
			3310-8
	Sprague	ULN-2074B	2898-27
			¶ 398-16
			3310-22
		ULS-2074H	2898-39
2075	**IPS**	**IP2075**	★**3599**
			2897-160
	SGS	ULN2075B	2898-2
	SiliconG	SG2075	2898-16
			3310-9
	Sprague	ULN-2075B	2898-28
			3310-23
		ULS-2075H	2898-40
2076	**IPS**	**IP2076**	★**3599**
			2897-161
	SGS	ULN2076B	2898-3
	SiliconG	SG2076	2898-17
			3310-10
	Sprague	ULN-2076B	2898-29
			3310-24
		ULS-2076H	2898-41
2077	**CTI**	**CT2077**	★ **601**
			2901-41
	IPS	**IP2077**	★**3599**
			2897-162
	SGS	ULN2077B	2898-4
	SiliconG	SG2077	2898-18
			3310-11
	Sprague	ULN-2077B	2898-30
			3310-25
		ULS-2077H	2898-42
2078	Toshiba	TC2078-35	3841-47
		TMM2078-45	★**4263**
			3841-96
		TMM2078-55	★**4263**
			3842-35
208	AD	AD208	3346-49
		AD208A	3342-29
	AnalogSys	MA208	3330-96
	Fairchild	μA208AM	3342-31
		μA208M	3346-51
	Intel	iSBC208	2031-39
	MicroPwr	**MP208**	★**3607**
			3346-55
		MP208A	★**3607**
			3342-35
	Motorola	**LM208**	★**3615**
			3346-57
		LM208A	★**3615**
			3342-37
	National	LM208	3346-59
		LM208A	3342-39
	PMI	**DAC-208A**	★**3637**
			2856-13
		DAC-208B	★**3637**
			2856-15
		DAC-208E	★**3637**
			2856-14
		DAC-208F	★**3637**
			2856-16
	SGS	M208	3321-12
	Telefunken	U208	3404-89
	ThomsonCSF	LM208	3346-63
		LM208A	3342-42
2081	**iLSi**	**CA-2081**	★**4664**
			4448-23
	Sprague	ULN-2081A	3310-168
2082	Sprague	ULN-2082A	3310-165
2083	Sprague	ULN-2083A	3310-64
		ULS-2083H	3310-65
2085	iLSi	CA2085	4448-24
	Plessey	TDA2085A	2895-133
2086	Sprague	ULN-2086A	3309-37
2088	**Hughes**	**HHGA2088**	★ **683**
			4447-27
		HVGA2088	★ **683**
			4447-26
2089	NEC	μPB2089	3831-97
	Toshiba	**TMM2089**	★**4263**
209	Cherry	CS209	3401-140
	IPS	IP209	2897-163
			3384-89
		IP209A	3384-90
	Motorola	**LM209H**	★**3622**
			3384-19
			(Continued)

Base Number	Source	Device	Page-Line
209	**Motorola**	**LM209K**	★**3622**
			3384-60
	National	LM209H	3384-22
		LM209K	3384-63
	SiliconG	SG209K	3384-71
		SG209T	3384-27
	Telefunken	U209	3404-90
2092	**iLSi**	**CA-2092**	★**4664**
			4448-25
2096	iLSi	CA2096	4448-26
209HCT01			
	MicroTech	209HCT01	1448-59
	Sahni	209HCT01	844-84
209X4	National	PAL209X4C	4472-83
20C1	MMI	HAL20C1C	4475-109
		PAL20C1C	★**4682**
			4472-26
		PAL20C1M	★**4682**
			4472-57
	National	PAL20C1C	4472-40
		PAL20C1M	4472-41
20C16	SSS	SCM20C16A-45	3837-59
		SCM20C16A-55	3837-79
		SCM20C16A-70	3837-95
		SCM20C16AL-45	3837-60
		SCM20C16AL-55	3837-80
20C89	**SiliconSys**	**SSI20C89**	★**3737**
			3379-34
20C90	**SiliconSys**	**SSI20C90**	★**3737**
			3379-35
20H2	Lattice	RAL20H2-15	4467-90
		RAL20H2-15L	4467-91
		RAL20H2-25	4468-52
		RAL20H2-25L	4468-53
		RAL20H2-35	4469-4
		RAL20H2-35L	4469-5
	TI	TIBPAL20H2	4469-47
20H8	Lattice	RAL20H8-15	4467-92
		RAL20H8-15L	4467-93
		RAL20H8-25	4468-54
		RAL20H8-25L	4468-55
		RAL20H8-35	4469-6
		RAL20H8-35L	4469-7
20HCT24			
	MicroTech	20HCT24	1448-90
20L10	MMI	HAL20L10AC	4475-29
		HAL20L10C	4476-5
		HAL20L10M	4476-18
		PAL20L10AC	★ **691**
			★**4682**
			★**4702**
			★**4706**
			4470-95
		PAL20L10C	★ **691**
			★**4682**
			★**4702**
			★**4706**
			4472-78
		PAL20L10M	★ **691**
			★**4682**
			★**4702**
			★**4706**
			4472-109
	National	PAL20L10C	4472-84
		PAL20L10M	4472-85
	TI	**TIBPAL20L10-XX**	
			★ **725**
			★**4766**
			4469-57
			4470-62
20L2	Lattice	RAL20L2-15	4467-94
		RAL20L2-15L	4467-95
		RAL20L2-25	4468-56
		RAL20L2-25L	4468-57
		RAL20L2-35	4469-8
		RAL20L2-35L	4469-9
	MMI	HAL20L2C	4475-110
		HAL20L2M	4476-4
		PAL20L2C	★**4682**
			4472-27
		PAL20L2M	★**4682**
			4472-58
	TI	TIBPAL20L2	4469-48
20L76	**Raytheon**	**CGA20L76**	★ **700**
			★**4740**
			4454-4

Base Number	Source	Device	Page-Line
20L8	Lattice	RAL20L8-15	4467-96
		RAL20L8-15L	4467-97
		RAL20L8-25	4468-58
		RAL20L8-25L	4468-59
		RAL20L8-35	4469-10
		RAL20L8-35L	4469-11
	MMI	HAL20L8AC	4475-21
		HAL20L8AM	4475-30
		HAL20L8BC	4475-10
		PAL20L8A-2C	★ **691**
			★**4682**
			★**4693**
			★**4698**
			4471-66
		PAL20L8AC	★ **691**
			★**4682**
			★**4693**
			★**4698**
			4470-30
		PAL20L8AM	★ **691**
			★**4682**
			★**4693**
			★**4698**
			4470-96
		PAL20L8BC	★ **691**
			★**4682**
			★**4693**
			★**4698**
			4469-76
	TI	PAL20L8A	4470-53
20P2	Lattice	RAL20P2-15	4467-98
		RAL20P2-15L	4467-99
		RAL20P2-25	4468-60
		RAL20P2-25L	4468-61
		RAL20P2-35	4469-12
		RAL20P2-35L	4469-13
	TI	TIBPAL20P2	4469-49
20P8	Lattice	RAL20P8-15	4467-100
		RAL20P8-15L	4467-101
		RAL20P8-25	4468-62
		RAL20P8-25L	4468-63
		RAL20P8-35	4469-14
		RAL20P8-35L	4469-15
20PR6	Lattice	RAL20PR6-35L	4469-16
20R4	Lattice	RAL20R4-15	4467-102
		RAL20R4-15L	4467-103
		RAL20R4-25	4468-64
		RAL20R4-25L	4468-65
		RAL20R4-35	4469-17
		RAL20R4-35L	4469-18
	MMI	HAL20R4AC	4475-22
		HAL20R4AM	4475-31
		HAL20R4BC	4475-11
		PAL20R4A-2C	★ **691**
			★**4682**
			★**4693**
			★**4701**
			4471-67
		PAL20R4AC	★ **691**
			★**4682**
			★**4693**
			★**4701**
			4470-31
		PAL20R4AM	★ **691**
			★**4682**
			★**4693**
			★**4701**
			4470-97
		PAL20R4B-2C	★ **691**
			★**4682**
			★**4693**
			★**4701**
			4471-68
		PAL20R4BC	★ **691**
			★**4682**
			★**4693**
			★**4701**
			4469-77
	TI	PAL20R4A	4470-54
20R6	Lattice	RAL20R6-15	4467-104
		RAL20R6-15L	4467-105
		RAL20R6-25	4468-66
		RAL20R6-25L	4468-67
		RAL20R6-35	4469-19
		RAL20R6-35L	4469-20
	MMI	HAL20R6AC	4475-23
			(Continued)

Base Number	Source	Device	Page-Line
20R6	MMI	HAL20R6AM	4475-32
		HAL20R6BC	4475-12
		PAL20R6A-2C	★ **691**
			★**4682**
			★**4693**
			★**4700**
			4471-69
		PAL20R6AC	★ **691**
			★**4682**
			★**4693**
			★**4700**
			4470-32
		PAL20R6AM	★ **691**
			★**4682**
			★**4693**
			★**4700**
			4470-98
		PAL20R6B-2C	★ **691**
			★**4682**
			★**4693**
			★**4700**
			4471-70
		PAL20R6BC	★ **691**
			★**4682**
			★**4693**
			★**4700**
			4469-78
	TI	PAL20R6A	4470-55
20R8	Lattice	RAL20R8-15	4467-106
		RAL20R8-15L	4467-107
		RAL20R8-25	4468-68
		RAL20R8-25L	4468-69
		RAL20R8-35	4469-21
		RAL20R8-35L	4469-22
	MMI	HAL20R8AC	4475-24
		HAL20R8AM	4475-33
		HAL20R8BC	4475-13
		PAL20R8A-2C	★ **691**
			★**4682**
			★**4693**
			★**4699**
			4471-71
		PAL20R8AC	★ **691**
			★**4682**
			★**4693**
			★**4699**
			4470-33
		PAL20R8AM	★ **691**
			★**4682**
			★**4693**
			★**4699**
			4470-99
		PAL20R8B-2C	★ **691**
			★**4682**
			★**4693**
			★**4699**
			4471-72
		PAL20R8BC	★ **691**
			★**4682**
			★**4693**
			★**4699**
			4469-79
	TI	PAL20R8A	4470-56
20RA10	MMI	HAL20RA10	4475-111
		PAL20RA10C	★ **691**
			★**4682**
			4471-1
		PAL20RA10M	★ **691**
			★**4682**
			4471-73
20RP4	Lattice	RAL20RP4-15	4467-108
		RAL20RP4-15L	4467-109
		RAL20RP4-25	4468-70
		RAL20RP4-25L	4468-71
		RAL20RP4-35	4469-23
		RAL20RP4-35L	4469-24
20RP6	Lattice	RAL20RP6-15	4467-110
		RAL20RP6-15L	4467-111
		RAL20RP6-25	4468-72
		RAL20RP6-25L	4468-73
		RAL20RP6-35	4469-25
20RP8	Lattice	RAL20RP8-15	4467-112
		RAL20RP8-15L	4467-113
		RAL20RP8-25	4468-74
		RAL20RP8-25L	4468-75
			(Continued)

¶ Indicates page number in Application Note Directory.
★ Indicates additional data is provided on the page noted.

Base Number	Source	Device	Page-Line
20RP8	Lattice	RAL20RP8-35	4469-26
		RAL20RP8-35L	4469-27
20RS10	MMI	HAL20RS10	4475-112
		PAL20RS10C	★**4682**
			4471-74
		PAL20RS10M	★**4682**
			4472-28
20RS4	MMI	HAL20RS4	4475-113
		PAL20RS4C	★**4682**
			4471-75
		PAL20RS4M	★**4682**
			4472-29
20RS8	MMI	HAL20RS8	4475-114
		PAL20RS8C	★**4682**
			4471-76
		PAL20RS8M	★**4682**
			4472-30
20S10	MMI	HAL20S10	4475-115
		PAL20S10C	★**4682**
			4471-77
		PAL20S10M	★**4682**
			4472-31
20V8	**Lattice**	**GAL20V8-15**	★**4667**
			4467-20
			4467-28
		GAL20V8-15L	★**4667**
			4467-21
			4467-29
		GAL20V8-25	★**4667**
			4467-22
			4467-116
		GAL20V8-25L	★**4667**
			4467-23
			4467-117
		GAL20V8-35	★**4667**
			4467-24
			4468-78
		GAL20V8-35L	★**4667**
			4467-25
			4468-79
20X10	MMI	HAL20X10AC	4475-34
		HAL20X10C	4476-6
		HAL20X10M	4476-19
		PAL20X10AC	★ **691**
			★**4682**
			★**4702**
			★**4709**
			4471-2
		PAL20X10C	★ **691**
			★**4682**
			★**4702**
			★**4709**
			4472-79
		PAL20X10M	★ **691**
			★**4682**
			★**4702**
			★**4709**
			4472-110
	TI	**TIBPAL20X10-XX**	
			★ **725**
			★**4766**
			4469-58
20X4	MMI	HAL20X4AC	4475-35
		HAL20X4C	4476-7
		HAL20X4M	4476-20
		PAL20X4AC	★ **691**
			★**4682**
			★**4702**
			★**4707**
			4471-3
		PAL20X4C	★ **691**
			★**4682**
			★**4702**
			★**4707**
			4472-80
		PAL20X4M	★ **691**
			★**4682**
			★**4702**
			★**4707**
			4472-111
	TI	**TIBPAL20X4-XX**	
			★ **725**
			★**4766**
			4469-59
20X8	MMI	HAL20X8AC	4475-36
		HAL20X8C	4476-8
			(Continued)
20X8	MMI	HAL20X8M	4476-21
		PAL20X8AC	★ **691**
			★**4682**
			★**4702**
			★**4708**
			4471-4
		PAL20X8C	★ **691**
			★**4682**
			★**4702**
			★**4708**
			4472-81
		PAL20X8M	★ **691**
			★**4682**
			★**4702**
			★**4708**
			4472-112
	TI	**TIBPAL20X8-XX**	
			★ **725**
			★**4766**
			4469-60
20Z8	Lattice	ispGAL20Z8-15	4467-4
		ispGAL20Z8-15L	4467-5
		ispGAL20Z8-25	4467-8
		ispGAL20Z8-25L	4467-9
		ispGAL20Z8-35	4467-12
		ispGAL20Z8-35L	4467-13
21	**Burr-Brown**	**MP21**	★**3148**
			2837-36
			¶ 364-15
			¶ 377-11
			1453-100
			1456-105
			1457-298
			1460-4
			1469-51
		OP21G	3333-20
		OPA21E	★**3149**
			3339-6
		OPA21G	★**3149**
			3343-16
		UAF21	★**3152**
			3398-15
		UAF21H	★**3152**
			3398-16
	CentData	CD21/2100	2036-51
		CD21/2110	2036-26
		CD21/2140	2036-50
		CD21/2500	2036-25
		CD21/3038	2036-5
		CD21/3043	2036-3
		CD21/3500	2036-13
		CD21/4015	2034-43
		CD21/4029	2034-33
		CD21/4055	2034-41
		CD21/4130	2034-28
		CD21/5232	2036-28
		CD21/7052	2034-27
		CD21/8630	2021-35
		CD21/8635	2021-36
	Polycore	MX21	4464-40
	PMI	**OP-21A**	★**3636**
			3340-28
		OP-21B	★**3636**
			3333-21
			3339-51
		OP-21E	★**3636**
			3340-29
		OP-21F	★**3636**
			3333-22
			3339-52
		OP-21G	★**3636**
			3333-24
			3340-38
	Toshiba	TSC21SC	4482-10
	Zilog	Model 21	1823-2
210	AnalogSys	MD210	2898-126
	Barvon	BC210	4440-1
	Comlinear	CLC210A	3331-8
			3331-78
			3334-246
		CLC210AI	3354-17
		CLC210AM	3331-9
			3360-38
			3331-79
			3334-247
			3354-18
			(Continued)
210	Dionics	DI210	2877-55
	Exar	**XR210**	★**3544**
			3375-22
			¶ 412-3
			¶ 423-14
		XR210M	★**3544**
			3375-23
	Motorola	MVME210	2045-25
	National	CIM-210	2030-23
		COP210C	1450-128
		LM210	3329-26
	PMI	**DAC-210A**	★**3637**
			2859-57
		DAC-210B	★**3637**
			2859-58
		DAC-210E	★**3637**
			2859-59
		DAC-210F	★**3637**
			2859-64
		DAC-210G	★**3637**
			2859-61
	Signetics	TCA210	3316-61
	VTC	**VT210**	★**3270**
			1468-56
2100	**CalDevices**	**CHA2100**	★**4610**
			4440-32
		DLM2100	★**4605**
			4440-33
	Faraday	FE2100	1467-30
	Sanyo	LA2100	3322-85
	Signetics	PCE2100	2877-116
		PCF2100	★**3726**
			★**3733**
			2877-117
	SSM	SSM2100	3307-11
	Technitrol	MEDM-2100	1458-29
	TI	SE2100P	1450-25
			1451-87
	ThomsonCSF	SFC2100	3392-108
	TRW-Semi	CA2100	3324-98
2101	Intersil	LH2101A	3363-18
	National	LH2101A	3363-19
	Raytheon	LH2101A	3363-21
	Samsung	KA2101	3326-52
	Sanyo	LA2101	3322-86
	Siemens	SDA2101	3325-78
	TI	TCM 2101	¶ 412-17
2102	Fairchild	2102F	3835-4
		2102FM	3835-5
		2102H	3834-115
		2102HM	3834-116
		2102LF	3835-6
		2102LFM	3835-7
		2102LH	3834-117
		2102LHM	3834-118
	Samsung	KA2102A	3326-53
	SGS	M2102A	3835-9
		M2102A-2	3834-120
		M2102A-4	3835-16
		M2102A-6	3835-23
		M2102AL	3835-10
		M2102AL-2	3834-121
		M2102AL-4	3835-17
	TI	TCM 2102	¶ 412-17
21021	Fairchild	21021	3835-11
		21021M	3835-12
21022	Fairchild	21022	3835-18
		21022M	3835-19
2102L1	Fairchild	2102L1	3835-13
		2102L1M	3835-14
2102L2	Fairchild	2102L2	3835-20
		2102L2M	3835-21
2103	**Exar**	**XR2103**	★**3547**
			3380-30
	Samsung	KA2103	3326-87
2104	**iLSi**	**CA-2104**	★**4664**
			4448-27
	Intel	2104A	¶ 400-7
			¶ 438-8
	Samsung	KA2104	3326-88
2105	Lambda	LAS2105	¶ 427-5
2107	Intel	2107A	¶ 439-12
		2107B	¶ 439-12
	TeledyneC	2107BE	2822-31
2108	**Intersil**	**LH2108A**	★**3600**
			★**3601**
			(Continued)
2108	Intersil	LH2108A	3361-34
	LinearTech	LH2108	3363-4
		LH2108A	3361-38
	MicroPwr	**MP2108**	★ **688**
			★**3607**
			3362-51
		MP2108A	★ **688**
			★**3607**
			3361-32
	National	LH2108	3363-1
		LH2108A	3361-35
	PMI	**PM-2108**	★**3636**
			3363-3
		PM-2108A	★**3636**
			3361-37
2109	ThomsonCSF	SFC2109	3384-29
		SFC2109M	3384-77
211	AD	AD211	3312-41
	AnalogSys	MS211	3404-97
	Intersil	**DG211**	★**3196**
			2823-89
	Maxim	DG211C	2823-90
	Motorola	**LM211**	★**3631**
			3312-44
		MVME211	★**2110**
			2045-11
	National	COP211C	1450-129
		LM211	3312-46
	Signetics	**LM211**	★**3725**
			3312-49
	SiliconG	SG211	3312-51
	Siliconix	**DG211C**	★**3223**
			2823-94
	Telefunken	U211B	3398-4
	ThomsonCSF	LM211	3312-53
	VTC	**VT211**	★**3270**
			1468-57
2110	iLSi	CA2110	4448-28
	National	LH2110	3329-28
	Sanyo	LA2110	3322-87
	Siemens	SDA2110	3324-60
	Signetics	PCE2110	2877-118
		PCF2110	★**3726**
			★**3733**
	SSM	SSM2110	3316-116
	TeledyneC	2110BE	2822-28
	ThomsonCSF	SFC2110M	3350-10
	TRW-LSI	TMC2110	843-107
2111	**Burr-Brown**	**OPA2111AM**	★**3149**
			3362-3
		OPA2111BM	★**3149**
			3361-24
	National	LH2111	3314-4
	Raytheon	LH2111	3314-6
	RCA	CA2111A	3322-13
	Signetics	**PCF2111**	★**3726**
			★**3733**
			2877-119
	Sprague	ULN-2111A	3322-40
			3326-71
2112	Hitachi	HM2112	3834-36
		HM2112-1	3834-31
	Siemens	SDA2112-2	3375-40
	Signetics	PCE2112	2877-109
		PCF2112	★**3726**
			★**3733**
			2877-113
2114	Fairchild	2114	3836-127
		2114-2	3836-67
		2114-3	3836-103
		2114-3M	3836-104
		2114L	3837-1
		2114L-2	3836-68
		2114L-3	3836-105
		2114M	3837-2
	GouldAMI	S2114H	¶ 438-17
	Intel	2114AL-1	3836-38
		2114AL-2	3836-44
		2114AL-3	3836-49
		2114AL-4	3836-69
		M2114A-4	3836-70
		M2114A-5	3836-82
		M2114AL-3	3836-50
		M2114AL-4	3836-71
	Motorola	**MCM2114-20**	★**4119**
			3836-72
			(Continued)

Arranged alphanumerically from left to right.

Base Number	Source	Device	Page-Line
2114	**Motorola**	**MCM2114-25**	★**4119**
			3836-83
		MCM2114-30	★**4119**
			3836-106
		MCM2114-45	★**4119**
			3837-3
	OKI	MSM2114	3837-5
		MSM2114-2	3836-74
		MSM2114-3	3836-108
	S-MOS	**SRM2114C-3**	★**4178**
			3836-80
	Sharp	LH2114-L2	3836-75
		LH2114L-20	3836-57
	SSS	SCM2114AL-1	3836-36
		SCM2114AL-2	3836-42
		SCM2114AL-3	3836-47
		SCM2114AL-4	3836-58
	Toshiba	**TMM2114A-12**	★**4263**
			3836-45
		TMM2114A-15	★**4263**
			3836-51
	UMC	UM2114AL	3836-76
		UM2114AL-1	3836-52
		UM2114AL-2	3836-46
		UM2114AL-3	3836-39
2115	Burr-Brown	OPA2115M	3362-4
	Intel	2115A	3834-75
		2115A-2	3834-97
		2115AL	3834-76
		2115AL-2	3834-98
		2115H-2	3834-56
		2115H-3	3834-61
		2115H-4	3834-69
2116	Hyundai	HY2116-10	3838-5
		HY2116-12	3838-39
		HY2116-15	3838-90
		HY2116-8	3837-99
2117	Intel	2117	¶ 400-11
2118	Intel	2118	¶ 438-12
212	AnalogSys	MC212	2895-139
	Cherry	CS212	3404-95
	Exar	XR-212ACS	¶ 414-4
		XR-212AS	¶ 414-5
	Fairchild	**µA212A**	★**3567**
			3379-112
	Inmos	T212	1464-72
	Intersil	**DG212**	★**3196**
	National	LM212	3333-27
			3346-48
	SiliconSys	**SSIK212**	★**3737**
			3380-19
	Siliconix	**DG212C**	★**3223**
			2823-95
	Telefunken	U212	3404-91
2120	**Exar**	**XR2120**	★**3547**
			3380-33
			¶ 411-17
	Siemens	SDA2120	3321-116
2121	**Exar**	**XR2121**	★**3548**
			3380-24
2122	**Exar**	**XR2122**	★**3549**
			3380-23
2123	**Exar**	**XR2123**	★**3549**
			3380-22
			¶ 411-17
	VTI	VL2123	2901-67
	Western	WD2123	2901-70
2125	**Exar**	**XR2125**	★**3550**
			3380-25
	Intel	2125A	3834-77
		2125A-2	3834-99
		2125AL	3834-78
		2125AL-2	3834-100
		2125H-1	3834-53
		2125H-2	3834-58
		2125H-3	3834-62
		2125H-4	3834-70
2126	**Exar**	**XR2126**	★**3550**
			3380-36
	TeledyneC	2126BG	2825-41
2128	Motorola	MCM2128-10	3838-6
		MCM2128-12	3838-40
		MCM2128-15	3838-91
	OKI	MSM2128	3838-42
		MSM2128-15	3838-93
		MSM2128-20	3839-21
			(Continued)
2128	Telefunken	U2128B	3319-126
	ThomsonCSF	ETL2128-3	3838-94
		ETL2128-4	3839-22
		ETL2128-5	3839-49
	UMC	UM2128	3839-25
		UM2128-1	3838-101
		UM2128-2	3838-47
		UM2128-3	3838-13
		UM2128L	3839-26
		UM2128L-1	3838-102
		UM2128L-2	3838-48
2129	**Exar**	**XR2129**	★**3550**
			3380-40
213	AnalogSys	MC213	2895-124
	SiliconSys	**SSI213**	★**3737**
			3380-68
2130	AMD	AM2130-10	3837-23
	iLSi	CA2130	4448-29
	TI	SE2130P	1450-26
			1451-88
	VTI	**VT2130**	★**4266**
			★**4267**
			3837-21
		VT2130-10	★**4266**
			★**4267**
			3837-25
		VT2130-12	★**4266**
			★**4267**
			3837-33
		VT2130-15	★**4266**
			★**4267**
			3837-36
		VT2130-20	★**4266**
			★**4267**
			3837-39
2131	AMD	AM2131-10	3837-24
	VTI	**VT2131**	★**4266**
			★**4267**
			3837-22
		VT2131-10	★**4266**
			★**4267**
			3837-26
		VT2131-12	★**4266**
			★**4267**
			3837-34
		VT2131-15	★**4266**
			★**4267**
			3837-37
		VT2131-20	★**4266**
			★**4267**
			3837-40
2134	SSM	SSM2134	3346-135
21350	GESemi	IGC21350	4445-27
214	AnalogSys	MS214	3404-98
	Motorola	**MVME214**	★**2110**
	SiliconSys	**SSIK214**	★**3737**
			3377-3
	VTC	**VM214**	★**3270**
			1469-26
2140	SGS	TDA2140	3325-10
	Telefunken	TDA2140	3325-31
2141	Intel	2141-2	3840-46
		2141-3	3840-48
		2141-4	3840-58
		2141-5	3840-67
		2141L-3	3840-49
		2141L-4	3840-59
		2141L-5	3840-68
2142	Hitachi	HM2142	3839-61
2143	Western	WD2143-03	1469-41
2147	AMD	AM2147-35	3839-99
		AM2147-45	3839-109
		AM2147-45M	3839-110
		AM2147-55	3840-1
		AM2147-55M	3840-2
		AM2147-70	3840-24
		AM2147-70M	3840-25
	Cypress	CY2147-35C	3839-89
		CY2147-45C	3839-104
		CY2147-45M	3839-105
		CY2147-55C	3839-119
		CY2147-55M	3839-120
	Intel	2147-3	3840-5
		2147A	3840-28
		2147A-3	3840-6
		2147AL	3840-29
			(Continued)
2147	Intel	2147AL-3	3840-7
		2147H	3840-30
			¶ 439-7
		2147H-1	3839-100
		2147H-2	3839-113
		2147H-3	3840-8
		2147HL	3840-31
		2147HL-3	3840-9
		M2147H	3840-32
		M2147H-2	3839-114
		M2147H-3	3840-10
	Intersil	2147	3840-33
	ITT	ITT2147-55	3840-11
		ITT2147-70	3840-34
		ITT2147-90	3840-42
	National	MM2147	3840-35
		MM2147-3	3840-12
		MM2147L	3840-36
		MM2147M	3840-41
		NMC2147H-4	3840-15
	NEC		
		µPD2147A-25	3839-87
		µPD2147A-35	3839-101
		µPD2147A-45	3839-116
	ThomsonCSF	ET2147H-1	3839-102
		ET2147H-2	3839-117
		ET2147H-3	3840-16
		ETL2147	3840-39
		ETL2147H-3	3840-17
	UMC	UM2147	3840-18
		UM2147-1	3840-19
		UM2147-2	3839-118
		UM2147L	3840-40
		UM2147L-1	3840-20
2148	AMD	AM2148-35	3835-72
		AM2148-45	3835-90
		AM2148-45M	3835-91
		AM2148-55	3836-2
		AM2148-55M	3836-3
		AM2148-70	3836-19
		AM2148-70M	3836-20
	Cypress	CY2148-35C	3835-61
		CY2148-45C	3835-79
		CY2148-45M	3835-80
		CY2148-55C	3835-108
		CY2148-55M	3835-109
	Intel	2148H	3836-25
		2148H-2	3835-96
		2148H-3	3836-8
		2148HL	3836-26
		2148HL-3	3836-9
		M2148H	3836-29
	National	MM2148H	3840-37
		MM2148H-2	3839-115
		MM2148H-3	3840-13
		MM2148H-3L	3840-14
		MM2148H-L	3840-38
		NMC2148H	3836-30
	ThomsonCSF	ET2148	3836-31
	UMC	UM2148	3836-32
		UM2148-1	3836-13
		UM2148-2	3835-101
		UM2148L	3836-33
		UM2148L-1	3836-14
2149	AMD	AM2149-35	3835-73
		AM2149-45	3835-92
		AM2149-45M	3835-93
		AM2149-55	3836-4
		AM2149-55M	3836-5
		AM2149-70	3836-21
		AM2149-70M	3836-22
	Cypress	CY2149-35C	3835-62
		CY2149-45C	3835-81
		CY2149-45M	3835-82
		CY2149-55C	3835-110
		CY2149-55M	3835-111
	Intel	2149H	3836-27
		2149H-2	3835-97
		2149H-3	3836-10
		2149HL	3836-28
	NEC	µPD2149	3836-11
		µPD2149-1	3835-99
		µPD2149-2	3835-74
		µPD2149-35	3835-75
			(Continued)
2149	NEC	µPD2149-45	3835-100
		µPD2149-55	3836-12
	UMC	UM2149	3836-34
		UM2149-1	3836-15
		UM2149-2	3835-102
		UM2149L	3836-35
		UM2149L-1	3836-16
215	Analogic	MP215	3306-53
	Exar	XR215	3375-35
			¶ 415-8
			¶ 423-10
			¶ 423-14
		XR215M	3375-36
	Intel	iSBC215	2031-40
	ITT	SAK215	3328-8
	PMI	**OP-215A**	★**3636**
			3362-22
		OP-215B	★**3636**
			3333-1
			3334-100
			3363-22
		OP-215C	★**3636**
			3333-2
			3334-101
			3363-76
		OP-215E	★**3636**
			3344-45
		OP-215F	★**3636**
			3333-3
			3334-102
			3363-23
		OP-215G	★**3636**
			3333-4
			3334-103
			3363-77
		OP215E	3362-21
2150	iLSi	CA2150	4448-30
	Telefunken	TDA2150	3325-32
	TI	**TMS2150**	★**1323**
			876-130
			¶ 438-6
		TMS2150-4	★**1323**
			3398-96
			3834-27
		TMS2150-5	★**1323**
			3398-97
			3834-28
2151	Samsung	KA2151	3325-5
	SGS	TDA2151	3325-11
	Telefunken	TDA2151	3325-33
2153	Samsung	KA2153	3324-121
216	Cherry	CS216	3328-11
	Ferranti	ZNA216E	2848-51
		ZNA216J	2848-52
	TRW-LSI	TMC216	843-76
		TMC216H	807-145
	VTC	**VM216**	★**3270**
			1469-25
2160	Telefunken	TDA2160	3325-34
	VersaLogic	2160	2042-18
2161	SGS	TDA2161	3325-12
	Telefunken	TDA2161	3325-35
2164	Intel	2164A	¶ 438-12
			¶ 439-11
	Sharp	LH2164-15	3847-63
		LH2164-20	3847-64
2165	MCE	MCEL2165	3330-59
2167	AMD	AM2167-35	3844-21
		AM2167-45	3844-36
		AM2167-45M	3844-37
		AM2167-55	3844-53
		AM2167-55M	3844-54
		AM2167-70	3844-69
		AM2167-70M	3844-70
	ITT	ITT2167-45	3844-40
		ITT2167-55	3844-58
		ITT2167-70	3844-76
	Motorola	**MCM2167H-35**	★**4119**
			3844-23
		MCM2167H-45	★**4119**
			3844-41
		MCM2167H-55	★**4119**
			3844-60
		MCM2167H-70	★**4119**
			3844-79
	NEC	µPD2167-2	3844-80
			(Continued)

¶ Indicates page number in Application Note Directory.

★ Indicates additional data is provided on the page noted.

Base Number	Source	Device	Page-Line
2167	NEC	µPD2167-3	3844-61
	UMC	UM2167	3844-81
		UM2167-1	3844-62
		UM2167-2	3844-42
2168	AMD	AM2168-35	3841-44
		AM2168-45	3841-90
		AM2168-55	3842-27
		AM2168-55M	3842-28
		AM2168-70	3842-68
		AM2168-70M	3842-69
	UMC	UM2168	3842-77
		UM2168-1	3842-33
		UM2168-2	3841-94
2169	AMD	AM2169-35	3841-45
		AM2169-45	3841-91
		AM2169-55	3842-29
		AM2169-55M	3842-30
		AM2169-70	3842-70
		AM2169-70M	3842-71
	UMC	UM2169	3842-78
		UM2169-1	3842-34
		UM2169-2	3841-95
217	**IPS**	**IP217**	★**3599**
			3393-82
		IP217A	★**3599**
			3393-83
		IP217AHV	★**3599**
			3394-35
		IP217HV	★**3599**
			3394-36
	Intel	iSBC217B	2031-45
	MCE	MCELM217	3393-92
	Motorola	**LM217**	★**3625**
			3393-95
		LM217L	★**3625**
			3393-69
	National	LM217	3393-98
	SGS	LM217	3393-101
	SiliconG	SG217	3393-73
			3393-105
		SG217A	3393-74
			3393-106
	Telefunken	U217	3405-142
		U217B	¶ 425-1
	Unitrode	UC217	3393-112
	VTC	VM217	1469-18
2170	SGS	TDA2170	3326-143
	Telefunken	U2170B	3326-160
2172	**VTC**	**VM2172**	★**3270**
			1468-121
2174	**VTC**	**VM2174**	★**3270**
			1468-125
2176	**VTC**	**VM2176**	★**3270**
			1469-3
2178	**VTC**	**VM2178**	★**3270**
			1469-6
218	Intel	iSBX218A	2032-36
	MicroInds	BLX218	2034-21
	National	LM218	3350-26
	ThomsonCSF	LM218	3350-28
	VTC	VM218	1469-19
2181	Samsung	KA2181	3322-156
2182	Samsung	KA2182	3322-157
	VTC	**VM2182**	★**3270**
			1468-122
2183	Samsung	KA2183	3322-158
	Signetics	**UAA2183**	★**3728**
2184	**VTC**	**VM2184**	★**3270**
			1468-126
2186	Intel	2186	¶ 438-13
	VTC	**VM2186**	★**3270**
			1469-4
2187	Intel	2187	¶ 438-13
2188	**VTC**	**VM2188**	★**3270**
			1469-7
219	National	LM219	3314-16
	Signetics	**LM219**	★**3725**
			3314-18
2190	SGS	TDA2190	3326-58
21C14	SSS	SCM21C14-1	3836-37
		SCM21C14-2	3836-43
		SCM21C14-3	3836-48
		SCM21C14-4	3836-59
21C16	SSS	SCM21C16-45	3837-61
		SCM21C16-55	3837-81
21L02	Fairchild	21L02F	3835-8
		21L02H	3834-119
21L021	Fairchild	21L021	3835-15
21L022	Fairchild	21L022	3835-22
21L14	**Motorola**	**MCM21L14-20**	★**4119**
			3836-73
		MCM21L14-25	★**4119**
			3835-98
			3836-84
		MCM21L14-30	★**4119**
			3836-107
		MCM21L14-45	★**4119**
			3837-4
21L41	AMD	AM21L41-12	3840-45
		AM21L41-15	3840-47
		AM21L41-20	3840-56
		AM21L41-25	3840-62
21L47	AMD	AM21L47-45	3839-111
		AM21L47-55	3840-3
		AM21L47-70	3840-26
21L48	AMD	AM21L48-45	3835-94
		AM21L48-55	3836-6
		AM21L48-70	3836-23
	Cypress	CY21L48-35C	3835-63
		CY21L48-45C	3835-83
		CY21L48-55C	3835-112
21L49	AMD	AM21L49-45	3835-95
		AM21L49-55	3836-7
		AM21L49-70	3836-24
	Cypress	CY21L49-35C	3835-64
		CY21L49-45C	3835-84
		CY21L49-55C	3835-113
22	**Burr-Brown**	**MP22**	★**3148**
			1456-106
			1457-74
			1460-13
			1460-84
			1469-52
	PMI	**OP-22A**	★**3636**
			3340-73
		OP-22B	★**3636**
			3343-5
		OP-22E	★**3636**
			3340-74
		OP-22F	★**3636**
			3343-6
		OP-22H	★**3636**
			3345-8
	TI	XDS-22	1821-19
	Toshiba	TSC22SC	4482-11
220	Comlinear	CLC220A	3307-144
			3331-2
			3334-271
		CLC220AI	3354-19
		CLC220AM	3307-145
			3331-3
			3334-272
			3354-20
	IPS	**IP220-12**	★**3599**
			3391-41
		IP220-15	★**3599**
			3391-107
		IP220-5	★**3599**
			3390-34
		IP220A-12	★**3599**
			3391-42
		IP220A-15	★**3599**
			3391-108
		IP220A-5	★**3599**
			3390-35
	Intel	iSBC220	2031-38
	MCE	MGA220	4450-37
	National	CIM-220	2030-22
	PMI	**OP-220**	★**3636**
			3334-138
		OP-220A	★**3636**
			3361-1
		OP-220B	★**3636**
			3361-18
		OP-220C	★**3636**
			3362-1
		OP-220E	★**3636**
			3361-2
		OP-220F	★**3636**
			3361-19
		OP-220G	★**3636**
			(Continued)
220	PMI	OP-220G	3362-2
		OP-220H	★**3636**
			3362-24
	Signetics	TCA220	3369-20
	SiliconG	SG220-05K	3390-51
		SG220-05P	3390-27
		SG220-05R	3390-52
		SG220-05T	3390-21
		SG220-12K	3391-56
		SG220-12P	3391-34
		SG220-12R	3391-57
		SG220-12T	3391-17
		SG220-15K	3391-122
		SG220-15P	3391-123
		SG220-15R	3391-100
		SG220-15T	3391-81
		SG220-5	3390-78
			3390-71
			3390-79
			3390-68
2200	ArrayTech	DHS2200	4439-27
	Exar	XR2200	2894-49
		XR2200M	2894-50
	Faraday	FE2200	1465-97
	MicroNet	**MN2200**	★**3202**
			3306-101
			¶ 421-9
		MN2200H	★**3202**
			3306-102
	Samsung	**SD2200**	★**4746**
	Sanyo	LA2200	3404-164
	Signetics	ACE2200	4455-33
	SSM	SSM2200	3316-179
	Technitrol	MEDM-2200	1458-30
	TI	SE2200P	1451-85
			1413-22
	ThomsonCSF	SFC2200	3392-109
	Xicor	X2200 Series	¶ 432-17
22001	Sierra	SC22001	3811-3
22002	Sierra	SC22002	3811-4
2201	Exar	XR2201	2894-101
			3310-94
		XR2201M	2894-102
			3310-95
	MicroNet	MN2201	3306-103
		MN2201H	3306-104
	National	LH2201A	3363-20
	Samsung	KA2201	3318-44
	Xicor	**X2201A**	★**4276**
			3811-103
			¶ 432-16
22011	Sierra	SC22011	3811-33
22012	RCA	CD22012	3320-97
	Sierra	SC22012	3811-34
22014	RCA	CD22014	3320-98
2202	Exar	XR2202	2894-119
			3310-96
		XR2202M	2894-120
			3310-97
2203	Exar	XR2203	2894-73
			3310-98
		XR2203M	3310-99
	TI	TCM2203A	3379-94
2204	Exar	XR2204	2894-53
			3310-100
		XR2204M	2894-54
			3310-101
	Sprague	ULN-2204	¶ 415-18
		ULN-2204A	3321-97
	TI	TCM2204A	3379-95
2206	Exar	XR-2206	¶ 412-3
		XR2206	★**3553**
			3376-36
			3376-37
			3380-56
			3380-57
			¶ 395-2
			¶ 396-8
			¶ 396-15
			¶ 421-1
		XR2206C	★**3553**
			3376-38
		XR2206M	★**3553**
			3376-39
			(Continued)
2206	Exar	XR2206M	3380-58
	Samsung	KA2206	3318-154
2207	Exar	XR2207	3376-23
			3380-59
			¶ 396-8
			¶ 416-2
			¶ 423-8
		XR2207C	3376-24
		XR2207M	3380-60
	Raytheon	XR2207C	3376-29
		XR2207M	3376-30
2208	Exar	XR2208	3400-125
			¶ 421-3
			¶ 423-7
			¶ 423-8
		XR2208M	3400-126
	MicroPwr	**MP2208**	★**3607**
			3362-52
		MP2208A	★**3607**
			3361-33
	National	LH2208	3363-2
		LH2208A	3361-36
	Siemens	SDA2208	3323-23
2209	**Exar**	**XR2209C**	★**3553**
			3376-25
		XR2209M	★**3553**
			3376-26
	Samsung	KA2209	3318-155
	ThomsonCSF	SFC2209	3384-30
221	**AD**	**ADG221A**	★**3144**
			2823-42
	Analogic	MP221	3307-18
	MicroDesigns	µDX-221	2033-9
	National	LM221	3307-87
		LM221A	3307-88
	PMI	**OP-221**	★**3636**
			3334-139
		OP-221A	★**3636**
			3361-3
		OP-221B	★**3636**
			3361-22
		OP-221C	★**3636**
			3361-49
		OP-221E	★**3636**
			3361-4
		OP-221F	★**3636**
			3361-23
		OP-221G	★**3636**
			3361-50
	Siemens	TBA221	3355-18
	Siliconix	**DG221A**	★**3223**
			★**3229**
			2823-63
		DG221C	★**3223**
			★**3229**
			2823-64
2210	National	LH2210	3329-25
	Samsung	KA2210	3318-156
	ThomsonCSF	SFC2210	3329-27
	TRW-LSI	TMC2210	843-108
	Xicor	**X2210**	★ **735**
			★**4276**
			3811-23
			¶ 432-16
		X2210/10	★ **735**
			★**4276**
			3811-24
		X2210/5	★ **735**
			★**4276**
			3811-25
		X2210A	★ **735**
			★**4276**
			3811-26
		X2210M	★ **735**
			★**4276**
			3811-27
		X2210M/10	★ **735**
			★**4276**
			3811-28
		X2210M/5	★ **735**
			★**4276**
			3811-29
22100	NEC	µPD22100	3378-11
	RCA	**CD22100**	★**1147**
			★**1152**
			2829-21
			(Continued)

Arranged alphanumerically from left to right.

Base Number	Source	Device	Page-Line
22100	**RCA**	**CD22100**	**★1147**
			★1152
			3378-12
	SGS	M22100	3378-13
	SiliconSys	**SSI22100**	**★3737**
			2829-24
22101	**RCA**	**CD22101**	**★1147**
			★1152
			2829-22
			★1147
			★1152
			3378-15
	Sierra	SC22101	3811-50
		SC22101-1	3811-46
	SiliconSys	**SSI22101**	**★3737**
			2829-25
22102	**RCA**	**CD22102**	**★1147**
			★1152
			2829-23
			★1147
			★1152
			3378-16
	Sierra	SC22102	3811-71
		SC22102-1	3811-65
	SiliconSys	**SSI22102**	**★3737**
			2829-26
22103	**RCA**	**CD22103A**	**★1147**
			★1152
			3379-96
22104	**RCA**	**CD22104**	**★1147**
			819-113
		CD22104A	**★1147**
			819-114
	Sierra	SC22104	3811-88
		SC22104-1	3811-77
22105	**RCA**	**CD22105**	**★1147**
			819-108
		CD22105A	**★1147**
			819-109
22106	**SiliconSys**	**SSI22106**	**★3737**
			2829-27
2211	Exar	XR2211	¶ 390-10
			¶ 395-2
			¶ 396-8
			¶ 396-15
			¶ 421-3
		XR2211C	**★3544**
			3375-24
			3375-141
			3381-109
		XR2211M	**★3544**
			3375-25
			3375-142
			3380-55
			3381-110
	National	LH2211	3314-5
	Raytheon	XR2211C	3375-27
			3375-151
			3381-114
		XR2211M	3375-28
			3375-152
			3381-115
	Sanyo	LA2211	3405-9
	Siemens	SDA2211	3325-91
2212	Exar	XR2212	¶ 415-8
			¶ 422-17
			¶ 423-2
			¶ 423-4
		XR2212M	**★3545**
			3375-26
	Samsung	KA2212	3318-45
	Xicor	**X2212**	**★ 735**
			★4276
			3811-58
			¶ 432-16
		X2212/10	**★ 735**
			★4276
			3811-59
		X2212/5	**★ 735**
			★4276
			3811-60
		X2212A	**★ 735**
			★4276
			3811-61
		X2212M	**★ 735**
			★4276
			(Continued)

Base Number	Source	Device	Page-Line
2212	Xicor	X2212M	3811-62
		X2212M/10	**★ 735**
			★4276
			3811-63
		X2212M/5	**★ 735**
			★4276
			3811-64
2213	Exar	XR2213	¶ 423-7
		XR2213C	**★3545**
			3375-143
		XR2213M	**★3545**
			3375-144
	Samsung	KA2213	3318-46
2216	Exar	XR2216	3377-161
	National	DL-2216H	2876-91
22187	Sharp	LZ22187	3400-52
22188	Sharp	LZ22188	3400-53
222	**AD**	**ADG222A**	**★3144**
			2823-43
	Fairchild	CCD222	3400-6
	Inmos	IMST222	1435-19
	Motorola	**MVME222**	**★2110**
	Siemens	TBA222	3350-33
2220	Samsung	KA2220	3319-38
	SGS	TDA2220	3319-75
	VersaLogic	2220	2039-31
22202	**RCA**	**CD22202**	**★1151**
			3380-115
22204	**RCA**	**CD22204**	**★1151**
			3380-116
2221	TRW-LSI	TMC2221	891-109
2222	Samsung	KA2222	3319-50
	TI	TCM2222	3379-93
22223	RCA	CD22223	3380-18
2224	Samsung	KA2224	3319-70
2225	Samsung	KA2225	3319-71
2226	Samsung	KA2226	3319-72
2227	Samsung	KA2227	3319-51
			3319-73
2228	Exar	XR2228	3400-127
			¶ 415-8
		XR2228M	3400-128
223	Fairchild	SH223	3385-7
		μA223	3385-10
	IPS	**IP223**	**★3599**
			3385-14
		IP223-12	**★3599**
			3387-79
		IP223-15	**★3599**
			3388-70
		IP223A	**★3599**
			3385-15
		IP223A-12	**★3599**
			3387-80
		IP223A-15	**★3599**
			3388-71
	Motorola	**LM223**	**★3622**
			3385-26
		LM223A	**★3622**
			3385-27
	National	LM223	3385-36
		LM223A	3385-37
	SiliconG	SG223	3385-45
		SG223A	3385-46
	SiliconSys	**SSI223**	**★3737**
			3379-126
2230	**Exar**	**XR2230**	**★3560**
			3395-92
			3401-144
22301	**RCA**	**CD22301**	**★1147**
			★1152
			3380-87
	SiliconSys	**SSI22301**	**★3737**
			3380-88
22302	**RCA**	**CD22302**	**★1151**
			3377-131
22303	**RCA**	**CD22303**	**★1151**
			3377-70
2232	Davidge	DSX-2232	2037-25
2235	Exar	XR2235	3395-93
22354	**RCA**	**CD22354**	**★1151**
			3377-151
22357	**RCA**	**CD22357**	**★1151**
			3377-52
224	Fairchild	μA224	3334-144
	Motorola	**LM224**	**★3618**
			(Continued)

Base Number	Source	Device	Page-Line
224	Motorola	LM224	3334-149
	National	LM224	3334-152
		LM224A	3370-38
	Raytheon	LM224	3334-156
	RCA	**CA224**	**★3672**
			3334-159
	SGS	LM224	3371-40
		LM224A	3370-10
	Signetics	**LM224**	**★3729**
			3334-162
	SiliconG	SG224	3334-165
		SG224A	3370-39
2240	Exar	XR2240	¶ 416-2
			¶ 428-15
		XR2240C	3383-16
		XR2240M	3383-17
	Fairchild	μA2240C	3383-18
	Sprague	ULN-2240A	3321-98
			¶ 414-14
22401	**RCA**	**CD22401**	**★1147**
			2874-141
			2875-24
			3324-44
22402	**RCA**	**CD22402**	**★1147**
			3326-120
2241	Sprague	ULN-2241A	3321-99
			¶ 414-14
			¶ 415-7
		ULN2241A	¶ 415-6
22413	**RCA**	**CD22413A**	**★1147**
			3379-75
22414	**RCA**	**CD22414A**	**★1147**
			3379-76
2242	Exar	XR2242C	3383-66
		XR2242M	3383-67
	Sprague	ULN-2242A	¶ 414-14
2243	Exar	XR2243	3383-9
	Samsung	KA2243	3322-22
	Sprague	ULN-2243A	3321-20
			3321-145
			3322-72
	TRW-LSI	TMC2243	837-73
2245	Weitek	WTL2245	843-112
		WTL2245C	808-26
		WTL2245M	808-27
2247	Exar	XR2247	3306-69
	Samsung	KA2247	3321-66
2248	Samsung	KA2248	3321-67
2249	Samsung	KA2249	3321-122
	Sprague	ULN-2249A	3321-39
			¶ 415-7
		ULN2249A	¶ 415-6
225	Analogic	MP225A	3306-130
	Barvon	BC225	4440-12
	Intel	iMDX225	1815-14
	Telefunken	U225	3379-99
2253	SiliconG	SG2253	3334-61
2256	Motorola	MBM2256	3826-10
226	Analogic	MP226	3306-132
2260	Sprague	ULN-2260A	3325-25
2261	Motorola	MC2261A	2900-70
		MC2261B	2900-71
		MC2261C	2900-72
	S-MOS	**SRM2261**	**★4178**
	Samsung	KA2261	3322-120
2263	Samsung	KA2263	3322-121
2264	Exar	XR2264	3404-104
	S-MOS	**SRM2264**	**★4177**
			★4178
	Samsung	KA2264	3322-122
2264C10			
	S-MOS	SRM2264C10	3843-23
2264C12			
	S-MOS	SRM2264C12	3843-44
2264C90			
	S-MOS	SRM2264C90	3843-14
2265	Exar	XR2265	3404-105
2266	Exar	XR2266	3404-106
2268	**S-MOS**	**SRM2268**	**★4178**
227	Analogic	MP227	3306-131
	LinearTech	OP-227A	3357-188
		OP-227B	3357-203
		OP-227C	3361-7
		OP-227E	3357-189
		OP-227F	3357-204
		OP-227G	3361-8
			(Continued)

Base Number	Source	Device	Page-Line
227	**MicroPwr**	**MPOP-227A**	**★ 688**
			★3607
			3357-192
		MPOP-227B	**★ 688**
			★3607
			3357-205
		MPOP-227C	**★ 688**
			★3607
			3361-5
		MPOP-227D	**★ 688**
			★3607
			3361-6
		MPOP-227E	**★ 688**
			★3607
			3357-193
		MPOP-227F	**★ 688**
			★3607
			3357-206
		MPOP-227G	**★ 688**
			★3607
			3357-196
	PMI	**OP-227A**	**★3636**
			3357-194
		OP-227B	**★3636**
			3357-207
		OP-227C	**★3636**
			3361-11
		OP-227E	**★3636**
			3357-195
		OP-227F	**★3636**
			3357-208
		OP-227G	**★3636**
			3361-12
2270	SGS	TDA2270	3326-144
	Sprague	ULN-2270	3326-157
2271	Exar	XR2271	2877-11
2272	Exar	XR2272	2877-9
2276	Exar	XR2276	2874-26
			3400-79
2277	Exar	XR2277	2874-23
2278	Exar	XR2278	2874-24
2279	Exar	XR2279	2874-25
2280	Sprague	ULN-2280B	3318-70
2281	**Samsung**	**KA2281**	**★3220**
			2876-123
2283	**Samsung**	**KA2283**	**★3220**
			2876-124
	Sprague	ULN-2283B	3318-71
2284	Exar	XR2284	2876-52
	Samsung	**KA2284**	**★3220**
			2876-121
2285	**Samsung**	**KA2285**	**★3220**
			2876-122
22859	**RCA**	**CD22859**	**★1147**
			★1152
			3382-84
2286	**Samsung**	**KA2286**	**★3220**
			2876-119
2287	**Samsung**	**KA2287**	**★3220**
			2876-120
2288	Exar	XR2288	2877-24
2289	NEC	μPB2289	3831-49
229	Siemens	TBA229	3321-149
2290	Sprague	ULN-2290	3326-72
22LP00	**Signetics**	**ACE22LP00**	**★4747**
			4455-35
22T00	**Signetics**	**ACE22T00**	**★4747**
			4455-34
22V10	AMD	AMPAL22V10AC	4470-7
		AMPAL22V10AM	
			4470-75
		AMPAL22V10C	4471-42
		AMPAL22V10M	
			4472-14
	Cypress	CYPAL22V10-25CC	
			4470-8
		CYPAL22V10-25WC	
			4473-26
		CYPAL22V10-30MC	
			4470-77
		CYPAL22V10-30WM	
			4473-27
		CYPAL22V10-35CC	
			4471-44
			(Continued)

¶ Indicates page number in Application Note Directory.
★ Indicates additional data is provided on the page noted.

Base Number	Source	Device	Page-Line
22V10	Cypress	CYPAL22V10-35WC	4473-28
		CYPAL22V10-40MC	4471-45
		CYPAL22V10-40WM	4473-40
23	CentData	CD23/2200	2036-17
	TeledyneC	CDA23	2824-130 2825-63
	Toshiba	**TSC23SC**	★**4799** 4482-9
230	Dionics	DI230	2877-56
	National	CIM-230	2030-20
2300	Eltec	MS2300	2041-1
	Kontron	2300	1815-16
	Sanyo	LA2300	3322-61
	ThomsonCSF	SFC2300	3392-102
	TRW-Semi	CA2300	3324-99
2301	**Fujitsu**	**C2301AVM**	★**4624** 4445-2
	National	LH2301A	3368-2
	TRW-Semi	CA2301	3324-100
2302	Samsung	KA2302	3317-2
2303	Samsung	KA2303	3317-3
2304	National	COP2304	1450-126
2308	**Intersil**	**LH2308A**	★**3600** ★**3601** 3361-46
	MicroPwr	**MP2308**	★**3607** 3367-47
		MP2308A	★**3607** 3361-45
	National	LH2308	3368-1
		LH2308A	3361-47
2309	ThomsonCSF	SFC2309	3384-31
231	National	LM231	3405-109
		LM231A	3405-110
	SGS	TBA231	3334-140
	Siemens	SAS231	3399-115
2310	Intersil	LH2310	3329-31
	National	LH2310	3329-32
	SGS	TDA2310	3319-23
	ThomsonCSF	SFC2310	3356-1
23100	**S-MOS**	**SMM23100**	★**4178**
231000	NEC	μPD231000	3853-103
		IPD231000-1	3853-98
		IPD231000-2	3853-92
231014	Goldstar	GM231014-20	3853-82
		GM231014-25	3853-91
231024	**Goldstar**	**GM231024**	★**4022**
	Panatech	**RP231024B**	★**4132** 3853-99
		RP231024D	★**4132** 3853-93
	VTI	**VT231024**	★**4265** 3853-74
		VT231024-17	★**4265** 3853-75
		VT231024-20	★**4265** 3853-84
		VT231024-30	★**4265** 3853-100
		VT231024-45	★**4265** 3853-106
2311	Intersil	LH2311	3314-58
	National	LH2311	3314-59
	Siemens	SDA2311	3325-79
23121	VTI	VT23121	3851-100
23127	Sharp	LH23127	3852-32
23128	GouldAMI	S23128A	3852-54
		S23128B	3852-24
	Hyundai	HY23128-20	3853-83
	NCR	**NCR23128-15**	★**4127** 3851-115
		NCR23128-20	★**4127** 3852-4
		NCR23128-25	★**4127** 3852-26
		NCR23128-30	★**4127** 3852-45
		NCR23128-45	★**4127** 3852-59
		NCR23128S-15	★**4127** 3851-116

(Continued)

Base Number	Source	Device	Page-Line
23128	**NCR**	**NCR23128S-20**	★**4127** 3852-5
		NCR23128S-25	★**4127** 3852-27
		NCR23128S-30	★**4127** 3852-46
		NCR23128S-45	★**4127** 3852-60
	NEC	μPD23128	3852-28
		μPD23128A	3852-6
		μPD23128E	3852-29
	Rockwell	R23128-25	3851-104
		R23128-3	3851-105
	SGS	M23128	3852-31
	Sharp	LH23128	3852-33
	Signetics	**23128-20**	★**4165** 3852-7
		23128-25	★**4165** 3852-34
		23128-30	★**4165** 3852-47
		23128-45	★**4165** 3852-62
		23128A-15	★**4165** 3851-117
		23128A-20	★**4165** 3852-8
	Toshiba	TMM23128	3852-11
	UMC	UM23128	3852-63
		UM23128-1	3852-50
		UM23128-2	3852-12
		UM23128A	3852-64
		UM23128A-1	3852-51
		UM23128A-2	3852-13
	VTI	**VT23128-15**	★**4265** 3851-119
		VT23128-20	★**4265** 3852-14
		VT23128-25	★**4265** 3852-38
		VT23128-45	★**4265** 3852-65
23129	**VTI**	**VT23129-15**	★**4265** 3851-120
		VT23129-20	★**4265** 3852-15
		VT23129-25	★**4265** 3852-39
		VT23129-45	★**4265** 3852-66
23130	VTI	VT23130-15	3851-121
		VT23130-20	3852-16
		VT23130-25	3852-40
		VT23130-30	3852-52
		VT23130-45	3852-67
23131	GouldAMI	S23131	3852-55
	VTI	VT23131	3852-41
		VT23131-25	3852-42
		VT23131-30	3852-53
		VT23131-45	3852-68
2315	ThomsonCSF	SFC2315	3357-132
2316	Analogic	MP2316	2839-29
	NCR	**NCR2316-20**	★**4127** 3849-39
		NCR2316-25	★**4127** 3849-42
		NCR2316-30	★**4127** 3849-46
		NCR2316-45	★**4127** 3849-60
	SGS	M2316	3849-62
	Toshiba	TSU2316E	3849-63
232	Cybernetic	CY232	2901-19 1468-6
	Dionics	DI232	2875-25
	SGS	L232	2895-138
2320	SGS	TDA2320	3307-79 3322-165
		TDA2320A	3319-59
2321	Analogic	MP2321	2839-30
	VersaLogic	2321	2041-6
2325	**S-MOS**	**SMM2325**	★**4178** 3853-25
23256	**GouldAMI**	**S23256B**	★**4023** 3852-127
		S23256C	★**4023**

(Continued)

Base Number	Source	Device	Page-Line
23256	GouldAMI	S23256C	3852-83
	NCR	**NCR23256-15**	★**4127** 3852-85
		NCR23256-20	★**4127** 3852-102
		NCR23256-25	★**4127** 3853-1
		NCR23256-30	★**4127** 3853-16
		NCR23256-45	★**4127** 3853-27
		NCR23256S-15	★**4127** 3852-86
		NCR23256S-20	★**4127** 3852-103
		NCR23256S-25	★**4127** 3853-2
		NCR23256S-30	★**4127** 3853-17
		NCR23256S-45	★**4127** 3853-28
	NEC	μPD23256A	3852-106
	Panatech	**RP23256D**	★**4132** 3853-6
		RP23256E	★**4132** 3852-108
	SGS	M23256	3853-8
	Signetics	**23256A-20**	★**4165** 3852-110
		23256A-25	★**4165** 3853-9
		23256A-30	★**4165** 3853-20
	Toshiba	**TMM23256**	★**4263** 3852-89
	UMC	UM23256	3853-30
		UM23256-1	3853-21
		UM23256-2	3852-112
		UM23256A	3853-31
		UM23256A-1	3853-22
		UM23256A-2	3852-113
	VTI	**VT23256-20**	★**4265** 3852-114
		VT23256-25	★**4265** 3853-11
		VT23256-45	★**4265** 3853-32
23257	**NCR**	**NCR23257-15**	★**4127** 3852-87
		NCR23257-20	★**4127** 3852-104
		NCR23257-25	★**4127** 3853-3
		NCR23257-30	★**4127** 3853-18
		NCR23257S-15	★**4127** 3852-88
		NCR23257S-20	★**4127** 3852-105
		NCR23257S-25	★**4127** 3853-4
		NCR23257S-30	★**4127** 3853-19
		NCR23257S-45	★**4127** 3853-29
	Panatech	**RP23257D**	★**4132** 3853-7
		RP23257E	★**4132** 3852-109
	VTI	**VT23257-20**	★**4265** 3852-115
		VT23257-25	★**4265** 3853-12
		VT23257-45	★**4265** 3853-33
2326	**S-MOS**	**SMM2326**	★**4178** 3853-26
2331	Sharp	LH2331	3850-14
		LH2331A	3849-122
	Siemens	TBB2331	3368-54
2332	**NCR**	**NCR2332-20**	★**4127** 3849-68
		NCR2332-25	★**4127** 3849-91
		NCR2332-30	★**4127** 3849-107

(Continued)

Base Number	Source	Device	Page-Line
2332	**NCR**	**NCR2332-45**	★**4127** 3850-11
	Rockwell	R2332A-2	3849-69
		R2332A-25	3849-70
		R2332A-3	3849-110
		R2332A-45	3850-13
	SGS	M2332	3849-83
	Sharp	LH2332	3850-15
		LH2332A	3849-123
	Signetics	**2332-15**	★**4165** 3849-74
		2332-20	★**4165** 3849-85
		2332-25	★**4165** 3849-93
		2332-30	★**4165** 3849-111
	TI	**TMS2332-15**	★**4229** 3849-76
		TMS2332-20	★**4229** 3849-87
		TMS2332-25	★**4229** 3849-95
	Toshiba	TMM2332	3849-124
	UMC	UM2332	3850-17
	VTI	**VT2332-25**	★**4265** 3849-97
		VT2332-30	★**4265** 3849-114
		VT2332-45	★**4265** 3850-18
2333	GouldAMI	S2333	3849-121
	NCR	**NCR2333-20**	★**4127** 3849-82
		NCR2333-25	★**4127** 3849-92
		NCR2333-30	★**4127** 3849-108
		NCR2333-45	★**4127** 3850-12
	SGS	M2333	3849-84
	UMC	UM2333	3850-21
	VTI	**VT2333-25**	★**4265** 3849-98
		VT2333-30	★**4265** 3849-115
		VT2333-45	★**4265** 3850-19
234	**AD**	**234**	★**3507**
	Ferranti	ZNA234	3326-109
	LinearTech	LM234	3398-102 3404-138
	National	LM234	3398-105 3404-144
2340	National	COP2340	1451-35
	VersaLogic	2340	2040-39
2341	National	COP2341	1451-36
2342	National	COP2342	1451-37
2344	Analogic	MP2344	2846-51
	SGS	M2344	3850-29
2348	SGS	M2348	3850-30
235	**AD**	**235**	★**3507**
	Cherry	CS235	3328-12
2350	GouldAMI	S2350	2901-98 1470-49
	Sprague	ULN-2350C	¶ 444-2
2351	Sprague	ULN-2351C	¶ 444-2
23512	**Goldstar**	**GM23512-10**	★**4022** 3853-40
		GM23512-12	★**4022** 3853-44
		GM23512-20	★**4022** 3853-49
	Panatech	**RP23512B**	★**4132** 3853-60
		RP23512D	★**4132** 3853-55
	Signetics	**23512**	★**4165**
	VTI	**VT23512-15**	★**4265** 3853-45
		VT23512-20	★**4265** 3853-50
		VT23512-25	★**4265** 3853-56
		VT23512-30	★**4265** 3853-61

(Continued)

Arranged alphanumerically from left to right.

PART NUMBER INDEX

Base Number	Source	Device	Page-Line
23512	**VTI**	**VT23512-35**	**★4265**
			3853-63
		VT23512-45	**★4265**
			3853-65
23513	**Signetics**	**23513**	**★4165**
236	National	LM236-2	3402-65
		LM236-5	3402-114
		LM236A-2	3402-66
		LM236A-5	3402-115
2361	Sharp	LH2361	3851-5
2362	SGS	M2362	3850-22
	Sharp	LH2362B	3850-114
2363	Plessey	SL2363C	3309-100
	Sharp	LH2363	3851-84
		LH2363A	3851-62
2364	GouldAMI	S2364A	3851-58
		S2364B	3850-121
	LMS	**GR2364**	**★4100**
			3851-95
	NCR	**NCR2364-20**	**★4127**
			3850-64
		NCR2364-25	**★4127**
			3850-110
		NCR2364-30	**★4127**
			3851-29
		NCR2364-45	**★4127**
			3851-75
		NCR2364S-20	**★4127**
			3850-65
			3850-127
		NCR2364S-25	**★4127**
			3850-111
		NCR2364S-30	**★4127**
			3851-30
		NCR2364S-45	**★4127**
			3851-76
	NEC	µPD2364A	3850-66
		µPD2364A-1	3850-46
		µPD2364E	3851-1
		µPD2364E-1	3850-79
		IPD2364E-25	3851-2
	Plessey	SL2364C	3309-101
	Rockwell	R2364A-2	3850-67
		R2364A-25	3850-112
		R2364A-3	3851-32
		R2364B-2	3850-81
		R2364B-25	3851-3
		R2364B-3	3851-45
	S-MOS	**SMM2364**	**★4178**
			3851-52
	SGS	2364B	3850-33
		M2364	3851-33
	Sharp	LH2364A	3851-57
	Signetics	**2364-15**	**★4165**
			3850-47
		2364-20	**★4165**
			3850-82
		2364-25	**★4165**
			3851-6
		2364-30	**★4165**
			3851-14
	TI	**TMS2364-15**	**★4228**
			3850-51
		TMS2364-25	**★4228**
			3851-7
	Toshiba	TMM2364	3851-8
	UMC	UM2364	3851-77
	VTI	**VT2364-15**	**★4265**
			3850-50
		VT2364-25	**★4265**
			3850-118
		VT2364-30	**★4265**
			3851-36
		VT2364-45	**★4265**
			3851-78
2365	MCE	MCETCA2365	3330-61
	NCR	**NCR2365-20**	**★4127**
			3850-77
		NCR2365-25	**★4127**
			3850-128
		NCR2365-30	**★4127**
			3851-43
		NCR2365-45	**★4127**
			3851-82
		NCR2365S-20	**★4127**
			(Continued)

Base Number	Source	Device	Page-Line
2365	NCR	NCR2365S-20	3850-78
		NCR2365S-25	**★4127**
			3850-129
		NCR2365S-30	**★4127**
			3851-44
		NCR2365S-45	**★4127**
			3851-83
	Rockwell	R2365	3850-36
	S-MOS	**SMM2365**	**★4178**
			3851-53
	SGS	M2365	3851-4
	Toshiba	TMM2365	3850-83
	VTI	**VT2365-15**	**★4265**
			3850-52
		VT2365-20	**★4265**
			3850-86
		VT2365-30	**★4265**
			3851-49
		VT2365-45	**★4265**
			3851-87
2366	Toshiba	TMM2366	3850-71
	UMC	UM2366	3851-85
		UM2366-1	3851-47
		UM2366-2	3850-84
		UM2366A	3851-86
		UM2366A-1	3851-48
		UM2366A-2	3850-85
	VTI	**VT2366-15**	**★4265**
			3850-53
		VT2366-20	**★4265**
			3850-87
		VT2366-30	**★4265**
			3851-50
		VT2366-45	**★4265**
			3851-88
2367	**S-MOS**	**SRM2367**	**★4178**
	VTI	VT2367	3850-20
2368	VTI	VT2368	3850-25
2369	VTI	VT2369-15	3850-54
		VT2369-20	3850-88
		VT2369-25	3851-9
		VT2369-30	3851-51
		VT2369-35	3851-63
		VT2369-45	3851-89
237	**IPS**	**IP237**	**★3599**
			3394-67
		IP237A	**★3599**
			3394-68
		IP237AHV	**★3599**
			3395-18
		IP237HV	**★3599**
			3395-19
	LinearTech	OP-237A	3357-190
		OP-237C	3361-9
		OP-237E	3357-191
		OP-237G	3361-10
	MCE	MCELM237	3394-76
	Motorola	**LM237**	**★3625**
			3394-79
		LM237M	**★3625**
			3394-63
	National	LM237	3394-82
			3395-34
		LM237HV	3395-26
	SiliconG	SG237	3394-88
		SG237A	3394-89
		SG237HV	3395-28
	Telefunken	U237B	2874-14
			¶ 399-17
	Unitrode	UC237	3395-2
			3395-39
2370	VersaLogic	2370	2039-62
2376	SMC	KR2376	2880-11
238	Fairchild	µA238	3393-40
	IPS	**IP238**	**★3599**
			3393-44
		IP238A	**★3599**
			3393-45
	National	LM238	3393-53
	SiliconG	SG238	3393-57
		SG238A	3393-58
2384	SGS	M2384	3851-93
2388	SGS	M2388	3851-94
239	Fairchild	µA239C	3316-16
	Motorola	**LM239**	**★3631**
			3316-20
			(Continued)

Base Number	Source	Device	Page-Line
239	**Motorola**	**LM239A**	**★3631**
			3315-38
	National	LM239	3316-22
		LM239A	3315-40
	Raytheon	LM239	3316-27
	RCA	**CA239**	**★3672**
			★3677
			3316-29
		CA239A	**★3672**
			★3677
			3315-44
	SGS	LM239	3316-31
		LM239A	3315-46
	Signetics	**LM239A**	**★3725**
			3316-33
2390	VersaLogic	2390	2039-66
23C1000			
	NCR	**NCR23C1000**	**★4127**
			3853-86
	NEC	µPD23C1000	3853-77
23C1024			
	VTI	**VT23C1024**	**★4265**
			3853-72
		VT23C1024-15	**★4265**
			3853-73
		VT23C1024-20	**★4265**
			3853-80
		VT23C1024-30	**★4265**
			3853-96
		VT23C1024-45	**★4265**
			3853-104
23C128	**NCR**	**NCR23C128-15**	**★4127**
			3851-102
		NCR23C128-20	**★4127**
			3851-124
		NCR23C128-25	**★4127**
			3852-18
	NEC		
		IPD23C128E	3851-125
		µPD23C128E-1	3851-110
	Panatech	**RP23C128D**	**★4132**
			3853-109
		RP23C128E	**★4132**
			3853-107
		RP23C128H	**★4132**
			3851-107
	Rockwell	R23C128	3851-103
	SSS	SCM23C128-1	3851-106
		SCM23C128-2	3851-109
		SCM23C128-3	3851-111
		SCM23C128M	3851-112
23C129	**Panatech**	**RP23C129D**	**★4132**
			3853-110
		RP23C129E	**★4132**
			3853-108
		RP23C129H	**★4132**
			3851-108
23C2000			
	NEC	µPD23C2000	3853-89
23C256	**NCR**	**NCR23C256-15**	**★4127**
			3852-79
		NCR23C256-20	**★4127**
			3852-92
		NCR23C256-25	**★4127**
			3852-119
	NEC		
		IPD23C256E	3852-93
		µPD23C256E-1	3852-80
	Panatech	**RP23C256D**	**★4132**
			3852-120
		RP23C256E	**★4132**
			3852-95
	SSS	SCM23C256-1	3852-76
		SCM23C256-2	3852-77
		SCM23C256-3	3852-81
23C257	**Panatech**	**RP23C257D**	**★4132**
			3852-121
		RP23C257E	**★4132**
			3852-96
23C32	SSS	SCM23C32	3849-101
		SCM23C32-3	3849-72
		SCM23C32-4	3849-78

Base Number	Source	Device	Page-Line
23C33	SSS	SCM23C33	3849-102
		SCM23C33-3	3849-73
		SCM23C33-4	3849-79
23C512	**NCR**	**NCR23C512-15**	**★4127**
			3853-42
		NCR23C512-20	**★4127**
			3853-46
		NCR23C512-25	**★4127**
			3853-51
23C64	Hughes	HCMP23C64C	3851-15
	NCR	**NCR23C64-15**	**★4127**
			3850-40
		NCR23C64-20	**★4127**
			3850-55
		NCR23C64-25	**★4127**
			3850-92
	NEC	µPD23C64E	3850-58
		µPD23C64E-1	3850-43
	Rockwell	R23C64-15	3850-35
		R23C64-25	3850-37
		R23C64-3	3850-38
		R23C64-35	3850-39
	SSS	SCM23C64	3851-17
		SCM23C64-3	3850-41
		SCM23C64-4	3850-56
	VTI	VT23C64	3850-94
23C65	**NCR**	**NCR23C65-15**	**★4127**
			3850-42
		NCR23C65-20	**★4127**
			3850-57
		NCR23C65-25	**★4127**
			3850-97
	SSS	SCM23C65-3	3850-44
		SCM23C65-4	3850-59
		SCM23C65M	3851-20
23X128	Signetics	23X128-15	3851-118
		23X128-20	3852-9
		23X128-25	3852-35
		23X128-30	3852-48
		23X128A-25	3852-36
		23X128A-30	3852-49
24	Interdesign	ULA24ARA	4444-1
		ULA24ARB	4444-2
		ULA24ARC	4444-6
		ULA24ARD	4444-9
		ULA24RA	4444-3
		ULA24RB	4444-4
		ULA24RC	4444-10
		ULA24RD	4444-12
	PMI	MUX-24	¶ 401-3
		MUX-24A	2830-74
		MUX-24B	2830-78
		MUX-24E	2830-75
		MUX-24F	2830-79
	Rockwell	R24	¶ 412-20
			¶ 413-1
		R24DC	¶ 413-2
			¶ 413-3
			¶ 413-4
			¶ 428-8
		R24DC/V96P/1	
			¶ 412-18
		R24LL	¶ 413-5
			¶ 413-6
			¶ 428-8
	TeledyneC	CAG24	2822-101
	VersaLogic	MIO-24	2040-61
240	Comark	CBX-DI240	2033-2
	Dionics	DI240	2877-57
	Exar	XR-C240	¶ 414-6
		XRC240	3380-91
	Fujitsu	**B240**	**★4625**
			4444-42
	Intech	ASH240	3404-23
	IPS	**IP240-12**	**★3599**
			3387-29
		IP240-15	**★3599**
			3388-29
		IP240-5	**★3599**
			3384-91
		IP240A-12	**★3599**
			3387-30
		IP240A-15	**★3599**
			3388-30
		IP240A-5	**★3599**
			(Continued)

¶ Indicates page number in Application Note Directory.
★ Indicates additional data is provided on the page noted.

Base Number	Source	Device	Page-Line
240	IPS	IP240A-5	3384-92
	Signetics	TCA240	3398-84
	SiliconG	SG240-05	3384-120
		SG240-06	3385-110
		SG240-08	3386-54
		SG240-12	3387-58
		SG240-15	3388-53
		SG240-18	3389-6
		SG240-20K	3389-41
2400	**AMCC**	**Q2400S**	★**4603**
			4439-10
	Calmos	CA2400	4441-19
	Fairchild	**FGC2400**	★**4621**
			4442-21
	Harris	HA-2400	3307-95
			3334-203
			3353-27
			¶ 408-4
	Samsung	**SD2400**	★**4746**
	TI	SE2400P	1450-27
			1451-89
	VTI	**VGC2400**	★**4805**
			4458-11
	Xicor	X2400	¶ 432-16
2401	Samsung	KA2401	3400-107
	SiliconG	SG2401	3308-25
	Sprague	ULN-2401A	3319-131
			3406-1
	Western	WD2401	1458-37
24010	**HoneywellSPT**	**HCAL24010**	★**3683**
			3398-95
2402	Samsung	KA2402	3400-108
	Sharp	IR2402	3311-45
2403	Samsung	KA2403	3400-109
	Sharp	IR2403	3309-5
2404	Harris	HA-2404	3307-96
			3334-204
			3353-28
	National	COP2404	1450-108
			1450-127
			1407-13
	Xicor	**X2404**	★ **736**
			★**4278**
			3811-76
2405	Harris	HA-2405	3307-97
			3334-205
			3356-55
			¶ 408-4
	Sharp	IR2405	3309-6
2406	Harris	HA-2406-5	3307-98
			3334-206
			3356-56
	Sharp	IR2406	2875-1
2410	**Samsung**	**KA2410**	★**3679**
			3382-34
	Sharp	IR2410	3309-7
2411	**Samsung**	**KA2411**	★**3679**
			3382-35
	Sharp	IR2411	3309-8
2412	**Samsung**	**KA2412**	★**3679**
			3381-72
	Sharp	IR2412A	2877-87
2413	**Samsung**	**KA2413**	★**3679**
			3382-88
2416	Intel	2416	¶ 439-12
	National	DL-2416	2876-92
	Sharp	LH2416-12	3845-100
	Telefunken	U2416	3321-79
2418	**Samsung**	**KA2418**	★**3679**
			3382-36
	TRW-Semi	CA2418	3324-101
2419	**Samsung**	**KA2419**	★**3679**
			3382-37
242	Dionics	DI242	2875-26
2420	Harris	HA-2420	¶ 405-11
		HA-2420-2	★**3170**
			3404-11
		HA-2420-8	★**3170**
			3404-12
	Samsung	**KA2420**	★**3679**
			3381-31
	Sharp	IR2420	3309-73
2424	Sharp	IR2424	2876-42
			3309-74
2425	Harris	HA-2425	¶ 405-11
		HA-2425-5	★**3170**
			(Continued)
2425	Harris	HA-2425-5	3404-13
	Sharp	IR2425	3309-75
2426	Sharp	IR2426	3309-76
2427	Sharp	IR2427	3309-77
2428	Sharp	IR2428	3309-78
2429	Sharp	IR2429	2877-86
	Sprague	ULN-2429A	3319-132
			3399-97
243	**Siliconix**	**DG243A**	★**3223**
			2825-86
		DG243C	★**3223**
			2825-87
	Telefunken	U243	3319-130
2430	Sprague	ULN-2430M	3383-51
2432	Sharp	IR2432	2875-2
2433	Sharp	IR2433	2875-3
2435	Sprague	ULN-2435A	3319-110
			¶ 420-7
244	RCA	TCC-244	3833-68
	Telefunken	U244	2874-15
2440	National	COP2440	1451-38
			¶ 412-10
			1407-14
		COP2440R	1450-113
			1450-119
			1407-15
	Siemens	TDA2440	3327-56
2441	National	COP2441	1451-39
			1407-16
		COP2441R	1450-114
	Siemens	TDA2441	3327-57
2442	National	COP2442	1451-40
			1407-17
2443	Xicor	X2443	¶ 432-13
2444	**Xicor**	**X2444**	★ **736**
			★**4278**
			3811-5
			¶ 432-12
			¶ 432-14
			¶ 432-18
		X2444/10	★ **736**
			★**4278**
			3811-6
		X2444M	★ **736**
			★**4278**
			3811-13
		X2444M/10	★ **736**
			★**4278**
			3811-7
2445	Sprague	ULN-2445A	3319-111
2449	SMC	COM2449	2901-34
			1452-131
245	Analogic	MN245	3403-165
	Harris	HD245	¶ 395-16
			¶ 396-6
2455	Sprague	ULN-2455A	3319-112
246	Exar	XR246	3334-67
	Harris	HD246	¶ 395-16
			¶ 396-6
	National	LM246	3334-73
	Telefunken	U246	3307-53
2460	Fairchild	µA2460	1468-103
2461	Fairchild	µA2461	1468-104
2469	Siemens	TBB2469	3322-91
247	Telefunken	U247B	2874-16
			¶ 399-17
2470	**Goldstar**	**GL2470**	★**3580**
			3326-122
248	Brooktree	BT248	2836-19
	Fairchild	µA248C	3372-33
	Motorola	**LM248**	★**3618**
			3372-35
	National	LM248	3372-37
	Raytheon	LM248	3372-39
2480	Fairchild	µA2480	3308-67
			1469-21
2482	Fairchild	µA2482	3308-60
2483	Fairchild	µA2483	3308-61
2484	Fairchild	µA2484	3308-62
2485	Fairchild	µA2485	3308-63
2486	Fairchild	µA2486	3308-64
2487	Fairchild	µA2487	3308-65
2488	Fairchild	µA2488	3308-66
249	National	LM249	3372-41
2490	Fairchild	µA2490	1468-99
2491	Fairchild	µA2491	1468-100
2492	Fairchild	µA2492	1468-101
24C02	Western	WD24C02	1458-38
24C04	**Xicor**	**X24C04**	★**4278**
			3811-75
24C16	**Xicor**	**X24C16**	★**4278**
			★**4282**
			3812-12
24H80	Fairchild	µA24H80	1469-22
24L84	**Raytheon**	**CGA24L84**	★ **700**
			★**4740**
			4454-5
24S10	**TI**	**TBP24S10**	★ **729**
			3814-111
		TBP24S10M	★ **729**
			3814-122
24S374	AMD	AM24S374	867-24
24S41	TI	TBP24S41	3816-99
24S81	TI	TBP24S81	3818-12
24S86	TI	TBP24S86M	3817-138
24SA10	TI	TBP24SA10	3814-120
24SA41	TI	TBP24SA41	3816-98
24SA81	TI	TBP24SA81	3818-11
25	**Siliconix**	**PWM25A**	★**3260**
			3396-116
		PWM25C	★**3260**
			3396-117
250	Analogic	MP250M	3403-166
	Cherry	CS250	2875-142
		CS250-1	2875-143
	Cybernetic	CY250	1468-5
	Fairchild	µA250	3393-12
	Intech	ASH250	3404-24
	IPS	**IP250**	★**3599**
			3393-16
		IP250A	★**3599**
			3393-17
	Motorola	**LM250**	★**3625**
			3393-25
	National	LM250	3393-28
	SiliconG	SG250	3393-32
		SG250A	3393-33
	Telefunken	U250	3306-7
		U250B	¶ 381-5
			¶ 420-4
	Unitrode	UC250	3393-37
2500	Cherry	CS2500G	4462-11
	Elantec	**EHA2500**	★**3538**
			3353-25
	Fairchild	**FGE2500**	★**4621**
			4442-22
	Harris	HA-2500	3353-26
		HSG2500RH	★ **655**
			4446-40
	Motorola	**MCA2500ECL**	★**4718**
			★**4720**
			4451-44
			¶ 443-5
	National	MCA2500ECL	¶ 443-8
	Samsung	**SD2500**	★**4746**
	TLSI	TA-2500	4456-33
2501	**Signetics**	**TDA2501**	★**3731**
	SiliconG	SG2501	¶ 427-19
		SG2501A	3392-90
2502	AMD	AM2502C	888-128
		AM2502M	888-129
	Elantec	**EHA2502**	★**3538**
			3356-48
	Harris	HA-2502	3356-51
	National	DM2502C	888-132
		DM2502M	888-133
	SiliconG	SG2502	3395-50
	SMC	COM2502	2901-64
2503	AMD	AM2503C	888-130
		AM2503M	888-131
	SiliconG	SG2503	3402-75
2504	AMD	AM2504C	889-53
		AM2504M	889-54
	National	DM2504C	889-55
		DM2504M	889-56
2505	**Elantec**	**EHA2505**	★**3538**
			3356-49
	Harris	HA-2505	3356-52
	Raytheon	RC2505	855-136
		RM2505	855-137
2506	AMD	AM2506M	855-13
25089	GouldAMI	S25089	3382-61
251	Intel	iSBC251	2032-6
		iSBX251	2033-7
	LTI	LA251	4464-7
2510	**Elantec**	**EHA2510**	★**3538**
			3356-42
	Harris	HA-2510	3356-41
			¶ 405-4
2511	Western	WD2511-01	2900-84
		WD2511-05	2900-85
		WD2511-11	2900-86
2512	Elantec	EH2512	3357-59
		EHA2512	★**3538**
	Harris	HA-2512	3357-60
2513	GI	R03-2513	3808-7
	MicronTech	MT2513	3830-36
			3830-37
			3830-39
2515	**Elantec**	**EHA2515**	★**3538**
			3357-64
	Harris	HA-2515	3357-65
2516	**LMS**	**GR2516**	★**4100**
			3849-65
	TI	TMS2516	¶ 441-19
		TMS2516-35	★**4216**
			3819-77
		TMS2516-45	★**4216**
			3819-88
	Weitek	WTL2516	843-78
2517	Weitek	WTL2517	843-79
		WTL2517C	807-146
		WTL2517M	807-147
252	LTI	LA252	4464-6
	SGS	M252	¶ 416-11
	Telefunken	U252	3324-43
	TI	TLC252C	3334-104
2520	**Elantec**	**EHA2520**	★**3538**
			3356-43
	Harris	HA-2520	3331-52
			3356-44
			¶ 405-2
2522	**Elantec**	**EHA2522**	★**3538**
			3357-61
	Harris	HA-2522	3357-62
	National	TDA2522	3324-138
2523	National	TDA2523	3324-139
2524	Cherry	CS2524	3395-70
		CS2524A	3395-71
	Exar	XR2524	3395-94
	IPS	**IP2524**	★**3599**
			3395-122
		IP2524B	★**3599**
			3395-123
	National	LM2524	3396-39
	RCA	CA2524	3396-53
			¶ 421-17
	SGS	SG2524	3396-60
		SG2524A	3396-61
	SiliconG	SG2524	3396-94
			¶ 422-1
			¶ 422-3
		SG2524B	3396-95
	Unitrode	**UC2524**	★**3739**
			3397-56
		UC2524A	★**3739**
			★**3739**
			3397-57
2525	Cherry	CS2525A	3395-72
	Elantec	**EHA2525**	★**3538**
			3357-68
	Exar	XR2525A	3395-95
	Harris	HA-2525	3357-67
	IPS	**IP2525A**	★**3599**
			3395-124
	Motorola	**SG2525A**	★**3626**
			3396-25
	SiliconG	SG2525A	3396-96
	Unitrode	**UC2525A**	★**3739**
			3397-58
2526	**IPS**	**IP2526**	★**3599**
			3395-125
		IP2526A	★**3599**
			3395-126
	Motorola	**SG2526**	★**3626**
			3396-26
	Signetics	**SG2526A**	★**3716**
			★**3730**
			(Continued)

Arranged alphanumerically from left to right.

PART NUMBER INDEX

Base Number	Source	Device	Page-Line
2526	Signetics	SG2526A	3396-85
	SiliconG	SG2526	3396-97
		SG2526A	3396-98
	Unitrode	**UC2526A**	★**3739**
			3397-59
2527	Cherry	CS2527A	3395-73
	Exar	XR2527A	3395-96
	IPS	**IP2527**	★**3599**
	Motorola	**SG2527A**	★**3626**
			3396-27
	SGS	SG2527A	3396-62
	SiliconG	SG2527A	3396-99
	Unitrode	**UC2527A**	★**3739**
			3397-60
253	LTI	LA253	4464-4
	SGS	M253	¶ 416-11
	SiliconG	SG253-05	3385-47
		SG253-12	3387-89
		SG253-15	3388-81
2530	Harris	HA-2530	¶ 408-5
	National	TDA2530	3324-140
2531	OEI	2531A	3307-7
2532	**LMS**	**GR2532**	★**4100**
			3850-31
	SGS	M2532	3820-106
		M2532-1	3820-97
	SiliconG	SG2532	3394-23
	TI	TMS2532	¶ 436-10
			¶ 441-19
		TMS2532-30	★**4215**
			3820-90
		TMS2532-35	★**4215**
			3820-98
		TMS2532-45	★**4215**
			3820-107
2533	AMD	AM2533	3857-59
	Micrel	MIC2533	3857-53
2534	Micrel	MIC2534	3857-52
2535	Harris	HA-2535	¶ 408-5
	Micrel	MIC2535	3857-48
2539	Harris	HA-2539	3331-22
			3334-276
			¶ 408-12
		HA-2539-2	3354-39
		HA-2539-5	3357-138
254	Intel	iSBC254S	2032-2
	Telefunken	U254	2874-17
2540	Harris	HA-2540	3331-27
			3334-274
		HA-2540-2	3354-38
		HA-2540-5	3357-137
	National	TDA2540	3327-28
	Signetics	**TDA2540**	★**3731**
			3327-68
	ThomsonCSF	TDA2540	3327-94
2541	Harris	HA-2541	¶ 408-14
		HA-2541-2	3346-77
		HA-2541-5	3346-78
	National	TDA2541	3327-29
	Signetics	**TDA2541**	★**3717**
			★**3731**
			3327-69
	Sprague	**UDN-2541**	★**3269**
			2898-61
		UDN-2541B	¶ 398-14
	ThomsonCSF	TDA2541	3327-95
2542	Harris	HA-2542	¶ 408-15
		HA-2542-2	3357-44
		HA-2542-5	3357-45
	SiliconG	SG2542	3401-49
	Sprague	**UDN-2542**	★**3269**
			2898-62
	ThomsonCSF	TDA2542	3327-96
2543	Exar	XR2543	3401-89
	SiliconG	SG2543	3401-93
			¶ 426.9
	Unitrode	**UC2543**	★**3740**
			3401-104
2544	Signetics	TDA2544	3327-70
	SiliconG	SG2544	3401-94
	Unitrode	**UC2544**	★**3740**
			3401-105
2545	**Signetics**	**TDA2545A**	★**3731**
			3326-65
	Sprague	**UDN-2545B**	★**3269**
			2894-43
2546	**Signetics**	**TDA2546A**	★**3731**
			3326-66
2549	SiliconG	SG2549	3398-117
255	MCE	MGA255	4458-15
			4464-35
			4464-36
			4464-37
	National	LF255	3351-50
2550	GouldAMI	S2550A	3381-58
2555	**Signetics**	**TDA2555**	★**3731**
2556	Exar	XR2556C	3383-96
		XR2556M	3383-97
2559	GouldAMI	S2559	¶ 413-7
		S2559E	3382-62
		S2559F	3382-63
256	Cromemco	256KZ	2038-40
	Dense-Pac	DPS256KB	3846-10
		DPS256KU	★**4008**
			3845-117
			3846-36
			3847-68
		DPX256KU	★**4008**
			3846-9
			3846-53
			3847-73
	GI	ROC256	3852-91
	ICI	**CMOS256-03**	★**3598**
			★**4031**
			3846-68
		CMOS256-03M	★**3598**
			★**4031**
			3846-65
	Lomas	LDP256K	2038-34
	MicroTech	CCD256SERP	3398-63
		CCD256SPS	3398-64
	National	LF256	3352-4
	PlesseyMicro	PME 256EA	2045-45
	Plessey	PME-256EA	2045-59
	RELMS	rMEM256K-BE	2036-43
	Reticon	RL256C	3400-33
		RL256EC	3400-34
		RL256G	3400-35
	Slicer	SEAT 256	2037-17
		SLAT256	2025-35
2560	GouldAMI	S2560G	3378-73
	National	TDA2560	3324-141
	S-MOS	STC2560	3378-101
2561	GouldAMI	S2561	3382-30
25610	GouldAMI	S25610	3378-125
25616	**Dense-Pac**	**DPV25616**	★**4008**
			3825-20
2563	GouldAMI	S2563	3378-126
25632	**Dense-Pac**	**DPV25632**	★**4008**
			3825-21
2565	S-MOS	STC2565	3378-102
2567	Exar	XR2567	3381-131
			¶ 411-14
		XR2567C	3376-53
		XR2567M	3376-54
			3381-132
2568	**Dense-Pac**	**DPV2568**	★**4008**
			3825-18
2569	GouldAMI	S2569	3382-103
		S2569A	3382-104
256K1	**Lattice**	**SR256K1-35C**	★**4092**
			3848-2
		SR256K1-45C	★**4092**
			3848-3
		SR256K1-55C	★**4092**
			3848-6
256K4	**Lattice**	**SR256K4-35C**	★**4093**
			3847-65
		SR256K4-45C	★**4093**
			3847-69
		SR256K4-55C	★**4093**
			3847-70
256K8	**Lattice**	**SR256K8-35C**	★**4094**
			3846-35
		SR256K8-45C	★**4094**
			3846-37
		SR256K8-55C	★**4094**
			3846-38
256x256			
	Reticon	RA256x256B	3399-127
257	National	LF257	3351-43
	Telefunken	U257B	2874-18
			¶ 399-17
2577	**Signetics**	**TDA2577A**	★**3731**
			3325-109
2578	**Signetics**	**TDA2578A**	★**3731**
			3325-110
2579	GouldAMI	S2579	3382-64
	Signetics	**TDA2579**	★**3731**
258	Brooktree	BT258	2836-18
	Burr-Brown	**INA258U**	★**3154**
			3369-32
		INA258V	★**3154**
			3369-31
		INA258W	★**3154**
			3369-30
	Cherry	CS258A	3328-4
	Motorola	**LM258**	★**3617**
			3334-116
			3366-52
	National	LM258	3334-119
			3365-32
		LM258A	3334-120
			3363-52
	RCA	**CA258**	★**3672**
			3334-123
			3365-34
		CA258A	★**3672**
			3363-53
	SGS	LM258	3371-41
		LM258A	3363-54
		M258	3320-155
	Signetics	**LM258**	★**3729**
			3334-125
			3365-37
2580	S-MOS	STC2580C	3379-10
	Sprague	**UDN-2580A**	★**3269**
			2896-90
			¶ 398-8
			¶ 398-10
			¶ 399-9
			¶ 402-13
			3381-7
2585	**Sprague**	**UDN-2585A**	★**3269**
			2896-91
			¶ 398-14
			3381-8
	ThomsonCSF	TEA2585	¶ 417-9
2586	ThomsonCSF	TEA2586	¶ 417-9
2588	**Sprague**	**UDN-2588A**	★**3269**
			2896-92
			3381-9
259	Cherry	CS259	3327-134
	SGS	M259	3320-156
2590	National	TDA2590	3325-123
2591	National	TDA2591	3325-124
	Telefunken	TDA2591	3325-135
25920	GouldAMI	S25920	3378-129
2593	**Signetics**	**TDA2593**	★**3731**
			3325-131
	Telefunken	TDA2593	3325-136
	ThomsonCSF	TDA2593	3325-139
2594	**Signetics**	**TDA2594**	★**3731**
			3325-132
2595	**Signetics**	**TDA2595**	★**3731**
			3325-111
	Sprague	**UDN-2595A**	★**3269**
			2895-39
			¶ 398-14
2596	**Sprague**	**UDN-2596A**	★**3269**
			2895-1
2597	**Sprague**	**UDN-2597A**	★**3269**
			2895-2
2598	**Sprague**	**UDN-2598A**	★**3269**
			2895-25
2599	**Sprague**	**UDN-2599A**	★**3269**
			2895-26
25HC04	**Siliconix**	**SI25HC04C**	★**3249**
			808-56
25HCT2517			
	MicroTech	25HCT2517	806-156
25LS07	AMD	AM25LS07C	866-78
		AM25LS07M	866-79
25LS08	AMD	AM25LS08C	864-325
		AM25LS08M	864-326
25LS09	AMD	AM25LS09C	879-92
		AM25LS09M	879-93
25LS138			
	AMD	AM25LS138C	1457-139
		AM25LS138M	1457-140
25LS139			
	AMD	AM25LS139C	863-12
		AM25LS139M	863-13
25LS14	AMD	AM25LS14AC	855-145
		AM25LS14AM	855-146
		AM25LS14C	855-147
		AM25LS14M	855-148
25LS15	AMD	AM25LS15C	854-8
		AM25LS15M	854-9
25LS168			
	AMD	AM25LS168AC	861-91
		AM25LS168AM	861-92
25LS174			
	AMD	AM25LS174C	866-47
		AM25LS174M	866-48
25LS190			
	AMD	AM25LS190C	861-166
25LS192			
	AMD	AM25LS192C	861-134
		AM25LS192M	861-135
25LS22	AMD	AM25LS22C	856-71
		AM25LS22M	856-72
25LS23	AMD	AM25LS23C	882-134
			3855-87
		AM25LS23M	882-135
			3855-88
25LS2513			
	AMD	AM25LS2513C	888-154
			1469-143
		AM25LS2513M	888-155
25LS2517			
	AMD	AM25LS2517C	855-54
		AM25LS2517M	855-55
25LS2518			
	AMD	AM25LS2518C	864-310
		AM25LS2518M	864-311
25LS2519			
	AMD	AM25LS2519C	864-343
		AM25LS2519M	864-344
25LS2520			
	AMD	AM25LS2520C	866-98
		AM25LS2520M	866-99
25LS2521			
	AMD	AM25LS2521C	854-106
		AM25LS2521M	854-107
25LS2535			
	AMD	AM25LS2535C	880-25
		AM25LS2535M	880-26
25LS2536			
	AMD	AM25LS2536C	863-139
		AM25LS2536M	863-140
25LS2537			
	AMD	AM25LS2537C	862-153
		AM25LS2537M	862-154
25LS2538			
	AMD	AM25LS2538C	863-146
		AM25LS2538M	863-147
25LS2539			
	AMD	AM25LS2539C	863-67
		AM25LS2539M	863-68
25LS2548			
	AMD	AM25LS2548C	863-113
25LS2568			
	AMD	AM25LS2568C	861-111
		AM25LS2568M	861-112
25LS2569			
	AMD	AM25LS2569C	860-10
		AM25LS2569M	860-11
25LS273			
	AMD	AM25LS273	866-149
25LS2922			
	AMD	AM25LS2922C	880-27
		AM25LS2922M	880-28
25LS299			
	AMD	AM25LS299	859-27
25LS378			
	AMD	AM25LS378C	866-80
		AM25LS378M	866-81
25LS379			
	AMD	AM25LS379C	864-327
		AM25LS379M	864-328

¶ Indicates page number in Application Note Directory.
★ Indicates additional data is provided on the page noted.

Base Number	Source	Device	Page-Line
25LS399			
	AMD	AM25LS399C	879-94
		AM25LS399M	879-95
25LS533			
	AMD	AM25LS533	876-70
25M4	TI	TLC25M4BC	3371-6
25S05	AMD	AM25S05C	855-138
		AM25S05M	855-139
25S07	AMD	AM25S07C	866-94
		AM25S07M	866-95
25S08	AMD	AM25S08C	864-339
		AM25S08M	864-340
25S09	AMD	AM25S09C	879-123
		AM25S09M	879-124
25S10	AMD	AM25S10	843-116
			¶ 352-4
		AM25S10C	888-101
		AM25S10M	888-102
	Signetics	N25S10	843-129
25S18	AMD	AM25S18C	864-315
		AM25S18M	864-316
25S373	AMD	AM25S373	876-31
25S374	AMD	AM25S374	867-25
25S533	AMD	AM25S533	876-77
25S534	AMD	AM25S534	866-133
25S557	AMD	AM25S557	843-15
		AM25S557C	855-126
25S558	AMD	AM25S558	843-16
260	Analogic	MP260	3403-167
	Cherry	CS260	2875-148
	National	LM260	3313-2
2600	**Elantec**	**EHA2600**	★**3538**
			3350-11
	Fujitsu	**C2600AV**	★**4624**
			4445-3
		C2600VH	★**4624**
			4445-4
	Harris	HA-2600	3346-206
			¶ 405-4
			¶ 407-9
	Inmos	**IMS2600-10**	★ **687**
			3827-15
		IMS2600-12	★ **687**
			3827-30
		IMS2600-15	★ **687**
			3827-53
	Sanyo	LA2600	3316-114
	TI	TAC2600VH	4456-17
	TRW-Semi	CA2600	3324-102
2601	SMC	COM2601	2901-97
	TRW-Semi	CA2601	3324-103
2602	AMD	AM2602C	880-159
		AM2602M	880-160
	Elantec	**EHA2602**	★**3538**
			3352-44
	Harris	HA-2602	3352-50
2605	**Elantec**	**EHA2605**	★**3538**
			3352-45
	Harris	HA-2605	3352-51
			¶ 407-9
	NEC	μPC2605H	3319-144
	SGS	L2605	3384-44
261	Analogic	MP261	3403-168
	National	LM261	3312-37
2610	NEC	μPC2610H	3319-145
	SGS	L2610	3386-99
2611	**Signetics**	**TDA2611A**	★**3729**
			3318-7
26129	**Signetics**	**26129**	★**4165**
2615	DDC	2615-10	2870-22
		2615-11	2870-20
		2615-12	2870-18
2616	**Signetics**	**2616-30**	★**4165**
			3849-47
		2616A-15	★**4165**
			3849-38
		2616A-20	★**4165**
			3849-40
		2616A-25	★**4165**
			3849-43
		2616A-30	★**4165**
			3849-48
	Xicor	X2616	3812-13
262	Cherry	CS262	3381-29
	Exar	XR-C262	¶ 412-2
			(Continued)
262	**Exar**	**XRC262**	★**3563**
			3380-92
2620	**Elantec**	**EHA2620**	★**3538**
			3350-13
	Harris	HA-2620	3334-262
			3350-14
			¶ 405-2
			¶ 405-3
			¶ 405-4
	Inmos	IMS2620-10	3826-46
		IMS2620-12	3826-52
		IMS2620-15	3826-65
2622	**Elantec**	**EHA2622**	★**3538**
			3352-46
	Harris	HA-2622	3334-263
			3352-54
2625	**Elantec**	**EHA2625**	★**3538**
			3352-47
	Harris	HA-2625	3334-264
			3352-55
263	Cherry	CS263	3316-67
	SiliconSys	**SSI263A**	★**3737**
			3323-147
	Telefunken	U263	3405-143
2630	Harris	HA-2630	3306-42
	Inmos	IMS2630-12	3826-37
		IMS2630-15	3826-38
		IMS2630-20	3826-40
2632	**Signetics**	**2632A-15**	★**4165**
			3849-75
		2632A-20	★**4165**
			3849-86
		2632A-25	★**4165**
			3849-94
		2632A-30	★**4165**
			3849-112
		2632AE-30	★**4165**
			3849-113
2635	Harris	HA-2635	3306-43
2637	Unitrode	UC2637	2896-15
			¶ 399-11
264	Intel	iSBC264	2032-13
	Telefunken	U264	891-20
2640	Harris	HA-2640	3331-80
			3350-16
2641	**Signetics**	**SCN2641**	★**1682**
			2900-17
			1452-122
			1465-24
2645	Harris	HA-2645	3331-81
			3355-3
2649	National	HS2649	3828-50
265	Telefunken	U265B	¶ 381-5
2650	ArrayTech	DHS2650	4439-28
	Harris	HA-2650	3363-59
	Signetics	2650A-1	1429-34
		SCN2650A	1452-119
2651	National	INS2651	2901-20
			1457-201
	Signetics	2651	¶ 377-13
			¶ 379-12
			¶ 383-4
		SCN2651C	★**1684**
			2901-21
			1452-127
			1457-208
	SMC	COM2651	2901-22
			1452-132
			1457-212
2652	Motorola	MC2652	2901-11
			¶ 382-6
			1464-2
		MC2652-2	2901-12
	Signetics	2652	¶ 395-6
			¶ 395-7
			¶ 395-8
			¶ 395-10
			¶ 396-10
		SCN2652A	★**1686**
			2901-9
			2901-15
			1452-125
			1457-190
			1457-191
			1465-41
2653	Motorola	MC2653	2879-10
			¶ 382-6
			1464-56
	Signetics	2653	¶ 395-1
			¶ 395-7
			¶ 395-8
			¶ 395-10
			¶ 396-18
		SCN2653	★**1688**
			2879-14
		SCN2653A	★**1688**
			3380-107
			1452-126
			1457-196
			1468-8
		TDA2653	★**3719**
			★**3732**
			3326-147
		TDA2653A	★**3719**
			★**3732**
			3326-148
2655	Harris	HA-2655	3365-41
	Signetics	TDA2655A	3326-149
		TDA2655B	3326-150
266	**Dense-Pac**	**DPS266**	★**4008**
			3845-118
	Telefunken	U266	891-44
2661	GI	AY2661A	1465-35
		AY2661B	1465-36
		AY2661C	1465-37
	Motorola	MC2661	1464-4
			¶ 382-6
		MC2661A	1465-42
		MC2661B	1465-43
		MC2661C	1465-44
	Signetics	2661	¶ 394-12
			¶ 395-1
			¶ 395-6
			¶ 395-7
			¶ 395-8
			¶ 395-10
		SCN2661A	★**1690**
			2900-73
			1452-128
			1457-209
			1465-38
		SCN2661B	★**1690**
			2900-74
			1452-129
			1457-210
			1465-39
		SCN2661C	★**1690**
			2900-75
			1452-130
			1457-211
			1465-40
	SMC	COM2661	2900-76
			1452-133
	UMC	UM2661-1	2900-77
		UM2661-2	2900-78
		UM2661-3	2900-79
	VTI	**VL2661**	★**1751**
			★**1752**
			★**1761**
			1465-48
2664	**Signetics**	**2664-20**	★**4165**
			3850-68
		2664-25	★**4165**
			3850-115
		2664A-15	★**4165**
			3850-48
		2664A-20	★**4165**
			3850-69
		2664A-25	★**4165**
			3850-116
		2664A-30	★**4165**
			3851-34
		2664AE-30	★**4165**
			3851-35
	Xicor	**X2664**	★**4280**
			3813-4
2665	**Signetics**	**2665-15**	★**4165**
			3850-45
		2665-20	★**4165**
			3850-60
		2665-25	★**4165**
			(Continued)
2665	Signetics	2665-25	3850-102
		2665-30	★**4165**
			3851-21
267	Telefunken	U267B	2874-19
			¶ 399-17
2670	**Motorola**	**MC2670**	★**1662**
			1466-67
	Signetics	2670	¶ 376-6
		2670/71/72/73	
			¶ 397-1
		SCN2670	3808-18
		SCN2670A	1466-68
		SCN2670B	1466-69
2670AC3			
	Signetics	SC2670AC3	1452-123
2670BC3			
	Signetics	SC2670BC3	1452-124
2671	**Motorola**	**MC2671**	★**1662**
			2880-19
			1458-13
	Signetics	2671	¶ 376-6
		SCN2671A	2880-20
			1452-134
			1458-14
2672	**Motorola**	**MC2672**	★**1662**
			1466-56
	Signetics	2672	¶ 376-6
		SCN2672	★**1700**
			1456-116
		SCN2672A	★**1700**
			1452-135
			1465-101
2673	**Motorola**	**MC2673**	★**1662**
			1466-12
	Signetics	2673	¶ 376-6
		SCB2673A	★**1702**
			1452-136
			1466-13
		SCB2673B	★**1702**
			1452-137
			1466-14
2674	**Motorola**	**MC2674**	★**1661**
			1452-120
			1465-56
	Signetics	**SCN2674**	★**1704**
			1452-121
			1465-57
			¶ 381-15
2675	**Motorola**	**MC2675**	★**1662**
			1465-64
	Signetics	**SCB2675**	★**1698**
			★**1706**
			1465-34
			1465-65
2677	**Signetics**	**SCB2677A**	★**1708**
			1466-15
		SCB2677B	★**1708**
			1466-16
268	Intel	iAPX268/10	1435-25
	Interdesign	MOA-268B	2881-54
	National	LM268-10	3403-49
		LM268-5	3402-116
		LM268-6	3402-137
	SGS	M268	3320-157
2681	Motorola	MC2681	2900-60
	Signetics	2681	¶ 395-6
		SCN2681	★**1692**
			2900-65
			1452-138
	UMC	UM2681-1	2900-67
		UM2681-2	2900-68
26810	Signetics	26810	2900-62
26814	Signetics	26814	2900-63
26818	Signetics	26818	2900-64
2682	Motorola	MC2682	2902-2
2685	SGS	L2685	3386-74
269	SGS	M269	3320-158
2691	**Signetics**	**SCC2691**	★**1694**
			2901-58
2698	**Signetics**	**SCC2698**	★**1696**
			2902-4
26C61	**Intersil**	**IM26C61**	★**1645**
			1466-89
26C62	**Intersil**	**IM26C62**	★**1645**
			1466-93
26L531	**Fairchild**	**μA26L531**	★**3569**

Arranged alphanumerically from left to right.

Base Number	Source	Device	Page-Line
26L532	**Fairchild**	**µA26L532**	★**3572**
26LS29	AMD	AM26LS29	¶ 396-17
		AM26LS29C	2881-37
		AM26LS29M	2881-39
	Signetics	AM26LS29	2881-38
26LS30	AMD	AM26LS30	¶ 396-17
		AM26LS30C	2881-50
			2883-56
		AM26LS30M	2881-52
			2883-58
	Signetics	AM26LS30	2881-51
			2883-57
26LS31	AMD	AM26LS31	¶ 396-17
		AM26LS31C	2884-13
		AM26LS31M	2884-14
	Fairchild	µA26LS31	2884-15
	Intech	AM26LS31	¶ 396-7
	Motorola	**AM26LS31**	★**3211**
			★**3212**
			2884-16
		AM26LS31C	★**3211**
			★**3212**
			2884-17
		AM26LS31M	★**3211**
			★**3212**
			2884-18
	National	DS26LS31C	2884-19
		DS26LS31M	2884-20
	Signetics	AM26LS31	2884-21
	TI	**AM26LS31**	★ **722**
26LS32	AMD	AM26LS32	¶ 396-17
		AM26LS32BC	2887-21
		AM26LS32BM	2887-22
		AM26LS32C	2887-28
		AM26LS32M	2887-29
	Fairchild	µA26LS32C	2887-30
		µA26LS32M	2887-31
	Intech	AM26LS32	¶ 396-7
	Motorola	**AM26LS32**	★**3211**
			★**3212**
			2887-32
	National	DS26LS32C	2887-33
		DS26LS32M	2887-34
	TI	**AM26LS32AC**	★ **722**
			2887-35
		AM26LS32AM	★ **722**
			2887-36
26LS33	AMD	AM26LS33C	2887-50
		AM26LS33M	2887-51
	National	DS26LS33C	2887-52
		DS26LS33M	2887-53
	TI	AM26LS33AC	2887-54
		AM26LS33AM	2887-55
26LS34	AMD	AM26LS34C	2887-23
		AM26LS34M	2887-24
26LS38	AMD	AM26LS38	887-138
26S02	AMD	AM26S02C	881-3
		AM26S02M	881-4
26S10	AMD	AM26S10C	888-79
			2889-40
		AM26S10M	888-80
			2889-33
	Motorola	**MC26S10**	★**3210**
			888-89
			2889-43
	National	DS26S10C	888-91
			2889-45
		DS26S10M	888-92
			2889-36
	TI	**AM26S10M**	★ **721**
			888-95
			2889-38
26S11	AMD	AM26S11C	888-81
			2889-41
		AM26S11M	888-82
			2889-34
	Motorola	MC26S11	888-90
			2889-44
	National	DS26S11C	888-93
			2889-46
		DS26S11M	888-94
			2889-37
	TI	**AM26S11M**	★ **721**
			888-96
			2889-39

Base Number	Source	Device	Page-Line
26S12	AMD	AM26S12AC	888-83
			2888-5
		AM26S12AM	888-84
			2888-6
		AM26S12C	888-85
			2889-27
		AM26S12M	888-86
			2889-28
26S64	SGS	26S64	3850-34
27	**AD**	**ADOP-27A**	★**3505**
			★**3507**
			3337-10
		ADOP-27B	★**3505**
			★**3507**
			3338-2
		ADOP-27C	★**3505**
			★**3507**
			3339-23
		ADOP-27E	★**3505**
			★**3507**
			3337-11
		ADOP-27F	★**3505**
			★**3507**
			3338-3
		ADOP-27G	★**3505**
			★**3507**
			3339-19
	Burr-Brown	**OPA27A**	★**3149**
			3341-16
			3337-21
		OPA27B	★**3149**
			3338-4
		OPA27C	★**3149**
			3339-40
		OPA27E	★**3149**
			3341-17
			3337-22
		OPA27F	★**3149**
			3338-5
		OPA27G	★**3149**
			3339-41
	Harris	HA-OP27A	3337-13
		HA-OP27B	3338-6
		HA-OP27C	3339-24
		HA-OP27E	3337-14
		HA-OP27F	3338-7
		HA-OP27G	3339-20
	Hitachi	HD27K	4447-1
		HD27L	4447-4
		HD27P	4447-6
		HD27Q	4447-9
	LinearTech	OP-27A	3341-34
		OP-27C	3339-34
		OP-27G	3339-35
	MicroPwr	**MPOP-27**	★ **688**
			★**3607**
			3339-9
		MPOP-27A	★ **688**
			★**3607**
			3337-15
		MPOP-27B	★ **688**
			★**3607**
			3338-8
		MPOP-27C	★ **688**
			★**3607**
			3339-36
		MPOP-27E	★ **688**
			★**3607**
			3337-16
		MPOP-27F	★ **688**
			★**3607**
			3338-9
		MPOP-27G	★ **688**
			★**3607**
			3339-37
	Motorola	**OP-27A**	★**3616**
			3341-37
		OP-27B	★**3616**
			3338-10
		OP-27C	★**3616**
			3339-25
		OP-27E	★**3616**
			3341-38
		OP-27F	★**3616**
			3338-11
		OP-27G	★**3616**
			(Continued)

Base Number	Source	Device	Page-Line
27	Motorola	OP-27G	3339-21
	OKI	**OCS27**	★**4733**
	PMI	**OP-27A**	★**3636**
			★**3639**
			3337-17
		OP-27B	★**3636**
			★**3639**
			3338-12
		OP-27C	★**3636**
			★**3639**
			3339-26
		OP-27E	★**3636**
			★**3639**
			3337-18
		OP-27F	★**3636**
			★**3639**
			3338-13
		OP-27G	★**3636**
			★**3639**
			3339-22
	Raytheon	**OP-27A**	★**3666**
			3337-19
		OP-27B	★**3666**
			3338-14
		OP-27C	★**3666**
			3339-38
		OP-27E	★**3666**
			3337-20
		OP-27F	★**3666**
			3338-15
		OP-27G	★**3666**
			3339-39
	Rockwell	V27P/1	¶ 414-3
	Siliconix	**PWM27A**	★**3260**
			3396-118
		PWM27C	★**3260**
			3396-119
	TeledyneC	CAG27	2822-85
		CAG27-10	2822-86
270	Analogic	MP270	3403-169
	HiLevel	DS270	1815-3
	Intel	iSBX270	2032-39
	RCA	CA270	3327-37
2700	**AD**	**AD2700J**	★**3136**
			3402-166
		AD2700L	★**3136**
			3402-167
		AD2700S	★**3136**
			3402-168
		AD2700U	★**3136**
			3402-169
	AMCC	Q2700C	4439-11
	HyComp	HC2700	3403-8
		HC2700-883	3403-9
	Matra	MA2700	4450-34
	Maxim	AD2700J	3403-23
		AD2700L	3403-24
		AD2700S	3403-25
		AD2700U	3403-26
2701	**AD**	**AD2701J**	★**3136**
			3402-170
		AD2701L	★**3136**
			3402-171
		AD2701S	★**3136**
			3402-172
		AD2701U	★**3136**
			3402-173
	HyComp	HC2701	3403-10
		HC2701-883	3403-11
	Maxim	AD2701J	3403-27
		AD2701K	3403-28
		AD2701L	3403-29
		AD2701S	3403-30
		AD2701U	3403-31
2702	**AD**	**AD2702J**	★**3136**
			3403-69
		AD2702L	★**3136**
			3403-70
		AD2702S	★**3136**
			3403-71
		AD2702U	★**3136**
			3403-72
	HyComp	HC2702	3403-78
		HC2702-883	3403-79
2705	**VTC**	**VA2705**	★**3742**
			3334-207
			(Continued)

Base Number	Source	Device	Page-Line
2705	**VTC**	**VA2705J**	★**3742**
			3368-29
		VA2705K	★**3742**
			3366-28
		VA2705L	★**3742**
			3363-34
		VA2705M	★**3742**
			3366-27
		VA2705N	★**3742**
			3363-33
2706	**Unitrode**	**UC2706**	★**3740**
			3405-146
	VTC	**VA2706**	★**3742**
			3334-208
		VA2706J	★**3742**
			3368-60
		VA2706K	★**3742**
			3368-55
		VA2706L	★**3742**
			3368-24
2707	**Unitrode**	**UC2707**	★**3740**
			3399-80
	VTC	**VA2707**	★**3742**
			3368-25
2708	Intel	2708	¶ 364-11
	OKI	MSM2708A	3817-162
2709	GouldAMI	S2709	3320-68
			3320-87
			3320-123
		S2709A	3320-81
	ThomsonCSF	SFC2709A	3346-124
		SFC2709M	3354-6
271	Analogic	MP271	3403-170
	Intech	ASH271	3404-25
	Siliconix	**DG271B**	★**3223**
			2828-1
		DG271C	★**3223**
			2827-102
	TI	**TLC271AM**	★ **718**
			3351-1
			3351-2
		TLC271BM	★ **718**
			3345-25
			3345-26
		TLC271M	★ **718**
			3334-92
			3350-51
			3356-57
2710	**AD**	**AD2710K**	★**3136**
			3402-174
		AD2710L	★**3136**
			3402-175
	HyComp	HC2710	3403-12
		HC2710-883	3403-13
	Maxim	AD2710L	3403-32
	ThomsonCSF	SFC2710	3312-32
2711	HyComp	HC2711	3403-14
		HC2711-883	3403-15
	ThomsonCSF	SFC2711	3314-33
2712	**AD**	**AD2712K**	★**3136**
			3403-73
		AD2712L	★**3136**
			3403-74
	DataTrans	DT2712	2039-61
	HyComp	HC2712	3403-80
		HC2712-883	3403-81
	SGS	M2712B	3823-15
27128	AMD	AM27128A	3823-25
		AM27128A-1	3822-95
		AM27128A-15	3822-96
		AM27128A-2	3823-3
		AM27128A-20	3823-4
		AM27128A-20M	3823-5
		AM27128A-25	3823-26
		AM27128A-25M	3823-27
		AM27128A-3	3823-51
		AM27128A-30	3823-52
		AM27128A-30M	3823-53
		AM27128A-4	3823-71
		AM27128AM	3823-28
	Fujitsu	27128	¶ 436-15
			¶ 436-16
		MBM27128-20	3823-16
		MBM27128-25	3823-29
		MBM27128-25X	3823-40
		MBM27128-30	3823-54
			(Continued)

¶ Indicates page number in Application Note Directory.
★ Indicates additional data is provided on the page noted.

Base Number	Source	Device	Page-Line
27128	Fujitsu	MBM27128-30W	3823-63
		MBM27128-30X	3823-64
	Hitachi	HN27128A-17	3822-100
		HN27128A-20	3823-17
		HN27128A-25	3823-41
	Intel	**27128-25**	**★4074**
			3823-31
		27128-3	**★4074**
			3823-56
		27128-30	**★4074**
			3823-50
		27128-4	**★4074**
			3823-73
		27128-45	**★4074**
			3823-69
		27128A	**★4074**
			3822-81
		27128A-1	**★4074**
			3822-97
		27128A-20	**★4074**
			3822-80
		27128A-25	**★4074**
			3822-82
		27128A-3	**★4074**
			3822-83
		27128A-30	**★4074**
			3822-84
		M27128	3823-6
		M27128-45	3823-70
	LMS	**GR27128**	**★4100**
			3823-82
	NEC	μPD27128	3823-34
		μPD27128-2	3823-9
			3823-10
		μPD27128-3	3823-58
		μPD27128-4	3823-74
			3823-75
	OKI	**MSM27128A**	**★4732**
			3823-35
	S-MOS	**SRM27128**	**★4178**
	SEEQ	**27128-2**	**★4142**
			3823-11
		27128-20	**★4142**
			3823-12
		27128-25	**★4142**
			3823-36
		27128-3	**★4142**
			3823-59
		27128-30	**★4142**
			3823-60
		27128-4	**★4142**
			3823-76
		27128-450	**★4142**
			3823-77
		M27128-25	**★4142**
			3823-38
		M27128-45	**★4142**
			3823-80
	Toshiba	**TMM27128-20**	**★4263**
			3823-42
		TMM27128-25	**★4263**
			3823-43
2713	Analogic	MP2713C	2846-16
2714	Analogic	MP2714C	2846-21
	Intel	2714	¶ 364-11
2715	DataTrans	DT2715	2039-47
	VTC	**VA2715**	**★3742**
			3334-209
2716	Fujitsu	MBM2716	¶ 436-15
			¶ 436-16
	Intel	2716	3819-83
			¶ 364-11
		2716-1	3819-75
		2716-2	3819-80
		2716-5	3819-90
		2716-6	3819-92
		M2716	3819-84
	LMS	**GR2716**	**★4100**
			3819-93
	National	MM2716	3819-85
		MM2716-1	3819-76
		MM2716-2	3819-81
	OKI	MSM2716A	3819-87
	Rockwell	R2716-25	3820-77
		R2716-350	3820-92
	SGS	M2716	3819-72
			(Continued)
2716	ThomsonCSF	ET2716	3819-89
		ET2716-1	3819-78
		ETC2716	3819-82
		ETC2716-1	3819-74
		ETC2716-5	3819-91
	VTC	**VA2716**	**★3742**
			3334-210
272	Analogic	MP272	3403-171
	Cherry	CS272	3381-25
	Interdesign	MOB-272	2885-56
	SGS	L272	3368-56
		L272M	3368-57
	TI	**TLC272AC**	**★ 718**
			3363-102
		TLC272AM	**★ 718**
			3363-103
		TLC272BC	**★ 718**
			3362-33
		TLC272BM	**★ 718**
			3362-34
		TLC272C	**★ 718**
			3334-106
			3368-9
		TLC272M	**★ 718**
			3334-136
			3368-10
2720	AD	AD2720	3403-75
		AD2720A	3402-176
		AD2720C	3402-177
		AD2720S	3402-178
		AD2720T	3402-179
	Harris	HA-2720	3347-13
			3334-26
			3346-203
2722	DataTrans	DT2722	2040-35
2723	ThomsonCSF	SFC2723C	3393-135
		SFC2723EC	3393-136
2724	DataTrans	DT2724	2040-50
2725	DataTrans	DT2725	2040-47
	Harris	HA-2725	3347-14
			3334-27
			3352-31
27256	AMD	AM27256	3824-45
		AM27256-1	3824-9
		AM27256-17	3824-10
		AM27256-2	3824-23
		AM27256-20	3824-24
		AM27256-20M	3824-25
		AM27256-25	3824-46
		AM27256-25M	3824-47
		AM27256-3	3824-69
		AM27256-30	3824-70
		AM27256-4	3824-83
	Fujitsu	MBM27256-20	3824-27
		MBM27256-25	3824-52
		MBM27256-25X	3824-53
		MBM27256-30	3824-74
		MBM27256-30W	3824-75
		MBM27256-30X	3824-76
	Hitachi	HN27256-25	3824-48
		HN27256-30	3824-71
	Intel	27256	3824-49
			¶ 437-3
		27256-1	3823-86
		27256-2	3824-26
		27256-20	3823-93
		27256-25	3823-100
		27256-3	3823-108
		27256-30	3823-109
		27256-5	3823-101
	LMS	**GR27256**	**★4100**
			3824-85
	NEC	μPD27256	3824-50
		μPD27256-3	3824-72
	OKI	**MSM27256-20**	**★4732**
			3824-22
		MSM27256-25	**★4732**
			3824-44
		MSM27256-30	**★4732**
			3824-68
	SEEQ	**27256-20**	**★4143**
			3824-29
		27256-25	**★4143**
			3824-55
		27256-30	**★4143**
			3824-77
			(Continued)
27256	**SEEQ**	**M27256-25**	**★4143**
			3824-56
		M27256-30	**★4143**
			3824-78
	Toshiba	**TMM27256-15**	**★4263**
			3824-7
		TMM27256-20	**★4263**
			3824-30
2726	DataTrans	DT2726	2039-51
2727	DataTrans	DT2727	2039-50
2731	SiliconG	SG2731	2896-9
			¶ 420-13
2732	AMD	AM2732A-25M	3820-79
		AM2732A-45M	3820-102
	Fujitsu	2732	¶ 436-16
		2732A	¶ 436-11
			¶ 436-15
			¶ 436-16
		MBM2732	¶ 436-11
		MBM2732A-20	3820-72
		MBM2732A-25	3820-80
		MBM2732A-30	3820-86
		MBM2732A-30X	3820-87
	Intel	2732A	3820-83
		2732A-2	3820-76
		2732A-20	3820-73
		2732A-25	3820-81
		2732A-3	3820-88
		2732A-30	3820-89
		2732A-4	3820-104
		2732A-45	3820-109
		M2732A-25	3812-120
		M2732A-45	3812-122
	LMS	**GR2732**	**★4100**
			3820-114
	TI	2732	¶ 436-10
		TMS2732	**★4214**
			1451-86
		TMS2732A-17	**★4214**
			3820-71
		TMS2732A-20	**★4214**
			3820-75
		TMS2732A-25	**★4214**
			3820-82
		TMS2732A-45	**★4214**
			3820-108
	ThomsonCSF	ETC2732-35	3820-95
		ETC2732-45	3820-101
		ETC2732-55	3820-113
2734	Analogic	MP2734	2846-20
	DataTrans	DT2734	2039-1
2735	Analogic	MP2735-1	2846-35
		MP2735-2	2846-34
	DataTrans	DT2735	2041-43
2737	SGS	M2737	3820-74
274	**TI**	**TLC274AM**	**★ 719**
			3371-7
		TLC274BM	**★ 719**
			3370-5
		TLC274M	**★ 719**
			3334-180
			3373-15
2742	DataTrans	DT2742	2040-36
	GouldAMI	S2742	¶ 420-12
2743	GouldAMI	S2743	¶ 420-12
2744	DataTrans	DT2744	2040-51
2745	DataTrans	DT2745	2040-48
2747	ThomsonCSF	SFC2747C	3367-22
		SFC2747M	3365-47
275	Intel	iSBX275	2005-1
			2032-40
2750	DataTrans	DT2750	2033-18
2751	DataTrans	DT2751	2033-17
27512	AMD	AM27512	3824-97
		AM27512-25	3824-98
		AM27512-3	3824-104
		AM27512-30	3824-105
		AM27512-30M	3824-106
		AM27512-45	3825-2
		AM27512-45M	3825-3
	Dense-Pac	**DPV27512**	**★4008**
			3824-101
	Fujitsu	MBM27512-20	3824-94
		MBM27512-25	3824-102
		MBM27512-30	3824-108
	Hitachi	**HN27512-25**	**★4036**
			(Continued)
27512	Hitachi	HN27512-25	3824-109
	Intel	**27512**	**★4076**
			3824-99
		27512-2	**★4076**
			3824-86
		27512-20	**★4076**
			3824-87
		27512-25	**★4076**
			3824-88
		27512-3	**★4076**
			3824-89
		27512-30	**★4076**
			3824-90
	Toshiba	**TMM27512**	**★4263**
27513	**Intel**	**27513**	**★4077**
			3823-81
		27513-2	**★4077**
			3822-87
		27513-20	**★4077**
			3822-88
		27513-25	**★4077**
			3822-89
		27513-3	**★4077**
			3822-90
		27513-30	**★4077**
			3822-91
2752	DataTrans	DT2752	2033-16
2757	DataTrans	DT2757	2033-10
2758	DataTrans	DT2758	2033-20
2761	ThomsonCSF	SFC2761C	3355-53
		SFC2761M	3350-41
2762	DataTrans	DT2762	2037-56
	Siemens	TAA2762	3363-86
2764	AMD	AM2764-20M	3821-109
		AM2764-25M	3822-25
		AM2764-45M	3822-78
		AM2764A	3822-8
		AM2764A-1	3821-79
		AM2764A-15	3821-76
		AM2764A-2	3821-95
		AM2764A-20	3821-96
		AM2764A-20M	3821-97
		AM2764A-25	3822-9
		AM2764A-25M	3822-10
		AM2764A-3	3822-38
		AM2764A-30	3822-39
		AM2764A-4	3822-64
		AM2764A-45M	3822-65
	DataTrans	DT2764	2037-67
	Fujitsu	2764	¶ 436-15
			¶ 436-16
		MBM2764-20	3821-98
		MBM2764-25	3822-11
		MBM2764-30	3822-40
		MBM2764-30X	3822-41
	Intel	2764	3822-13
		2764-2	3821-99
		2764-25	3822-14
		2764-3	3822-42
		2764-30	3822-43
		2764-4	3822-67
		2764-45	3822-68
		2764A	3822-22
		2764A-1	3821-7
		2764A-2	3821-106
		2764A-20	3821-14
		2764A-25	3821-19
		2764A-3	3821-26
		2764A-30	3821-27
		2764A-4	3821-28
		2764A-45	3821-29
		M2764-25	3813-38
		M2764-45	3813-71
	LMS	**GR2764**	**★4100**
			3822-79
	NEC	μPD2764	3822-16
		μPD2764-2	3821-101
		μPD2764-3	3822-44
		μPD2764-4	3822-69
	OKI	**MSM2764A**	**★4732**
			3822-70
	SEEQ	**2764-2**	**★4142**
			3821-102
		2764-20	**★4142**
			3821-103
		2764-25	**★4142**
			(Continued)

Arranged alphanumerically from left to right.

Base Number	Source	Device	Page-Line
2764	SEEQ	2764-25	3822-17
		2764-3	★4142 3822-45
		2764-30	★4142 3822-46
		2764-4	★4142 3822-59
		2764-45	★4142 3822-71
		M2764-25	★4142 3822-18
		M2764-45	★4142 3822-73
	SGS	M2764	3822-19
		M2764-4	3822-74
		M2764A	3821-104
	TI	**TMS2764-17**	★4213 3821-80
		TMS2764-20	★4213 3821-105
		TMS2764-25	★4213 3822-20
		TMS2764-45	★4213 3822-75
	ThomsonCSF	ET2764	3822-21
		ET2764-3	3822-48
		ET2764-4	3822-76
	Toshiba	**TMM2764**	★4263 3822-23
		TMM2764-2	★4263 3821-108
2765	DataTrans	DT2765	2037-62
2766	DataTrans	DT2766	2037-47
2767	DataTrans	DT2767	2037-46
2768	DataTrans	DT2768	2037-68
		DT2768-1	2037-63
2769	DataTrans	DT2769	2033-23
277	Exar	XR-C277	¶ 411-15
		XRC277	★3564 3380-93
2771	DataTrans	DT2771	2037-52
	Western	WD2771	1467-23
2772	DataTrans	DT2772	2038-6
2773	VTI	VL2773	1467-43
	Western	WD2773	1467-24
2774	DataTrans	DT2774	2037-41
2775	DataTrans	DT2775	2037-69
	Western	WD2775	1467-25
2777	VTI	VL2777	1467-44
	Western	WD2777	1467-26
2781	DataTrans	DT2781	2037-49
2782	DataTrans	DT2782	2037-50
2784	DataTrans	DT2784	2037-51
2785	DataTrans	DT2785	2037-65
279	Western	WD279X	¶ 363-3 ¶ 363-4 ¶ 363-5
2791	DataTrans	DT2791	2037-59
	Signetics	TDA2791	3326-67
	TI	TMS2791	1467-39
	VTI	VL2791	1467-45
	Western	WD2791	1467-50
		WD2791-02	1467-27
27916	**Intel**	**27916**	★4080 890-70 3823-39
		27916-3	★4080 3822-85
		27916-4	★4080 3822-86
2793	TI	TMS2793	1467-40
	VTI	**VL2793**	★1751 ★1752 ★1756 1467-46
	Western	WD2793-02	1467-51
2795	TI	TMS2795	1467-41
	Western	WD2795-02	1467-52
2797	TI	TMS2797	1467-42
	VTI	**VL2797**	★1751 ★1752 ★1756 1467-47
	Western	WD2797-02	1467-53
27C1024			
	AMD	AM27C1024	3825-10
		AM27C1024-2	3825-6
		AM27C1024-20	3825-7
		AM27C1024-25	3825-11
	Fujitsu	MBM27C1024-20	3825-5
		MBM27C1024-25	3825-9
27C1028			
	Fujitsu	MBM27C1028-20	3825-4 3825-13
		MBM27C1028-25	3825-8 3825-14
27C128	Fujitsu	27C128	¶ 436-16
	OKI	**MSM27C128-20**	★4732 3822-103
		MSM27C128-25	★4732 3823-20
		MSM27C128-30	★4732 3823-46
	TI	**TMS27C128**	★4210 3823-21
		TMS27C128-1	★4210 3822-93
		TMS27C128-15	★4210 3822-94
		TMS27C128-2	★4210 3822-104
		TMS27C128-20	★4210 3822-105
		TMS27C128-25	★4210 3823-22
		TMS27C128-3	★4210 3823-47
		TMS27C128-30	★4210 3823-48
		TMS27C128-4	★4210 3823-66
		TMS27C128-45	★4210 3823-67
	VTI	**VT27C128**	★4265 ★4272 3823-2
		VT27C128-20	★4265 ★4272 3822-102
		VT27C128-25	★4265 ★4272 3823-19
		VT27C128-30	★4265 ★4272 3823-45
27C16	National	NMC27C16-45	3819-86
27C256	**Fujitsu**	**MBM27C256-20**	★4019 3824-11
		MBM27C256-25	★4019 3824-31
		MBM27C256-25X	★4019 3824-32
		MBM27C256-30	★4019 3824-57
		MBM27C256-30W	★4019 3824-58
		MBM27C256-30X	★4019 3824-59
	Hitachi	**HN27C256**	★4037 3824-3
		HN27C256-20	★4037 3824-14
		HN27C256-25	★4037 3824-36
		HN27C256-30	★4037 3824-62
	Intel	**27C256**	★4079 3823-94
		27C256-1	★4079 3823-83
		27C256-17	★4079 3823-84
			(Continued)
27C256	**Intel**	**27C256-170**	★4079 3823-85
		27C256-2	★4079 3823-87
		27C256-20	★4079 3823-88
		27C256-200	★4079 3823-89
		27C256-25	★4079 3823-95
		27C256-250	★4079 3823-96
		27C256-3	★4079 3823-102
		27C256-30	★4079 3823-103
		27C256-300	★4079 3823-104
	NEC		
		μPD27C256-15	3824-5
		μPD27C256-20	3824-16
		μPD27C256-25	3824-39
		μPD27C256-30	3824-63
		μPD27C256A-15	3824-8
		μPD27C256A-20	3824-17
	OKI	**MSM27C256-07**	★4732 3823-111
		MSM27C256-10	★4732 3823-112
		MSM27C256-12	★4732 3824-1
	Panatech	**RD27C256-15**	★4133 3824-6
		RD27C256-20	★4133 3824-18
		RD27C256-25	★4133 3824-40
		RD27C256-30	★4133 3824-64
	S-MOS	**SRM27C256**	★4178
	SEEQ	27C256-25	3824-51
		27C256-3	3824-73
		M27C256-25	3824-34
		M27C256-30	3824-60
	TI	**SMJ27C256**	★ 726
		TMS27C256	★ 726 ★4209 3823-23
		TMS27C256-1	★ 726 ★4209 3822-98
		TMS27C256-17	★ 726 ★4209 3822-99
		TMS27C256-2	★ 726 ★4209 3822-106
		TMS27C256-20	★ 726 ★4209 3823-1
		TMS27C256-25	★ 726 ★4209 3824-41
		TMS27C256-3	★ 726 ★4209 3824-65
		TMS27C256-30	★ 726 ★4209 3824-66
		TMS27C256-4	★ 726 ★4209 3824-81
		TMS27C256-45	★ 726 ★4209 3824-82
	VTI	**VT27C256**	★4265 ★4273 3824-20
			(Continued)
27C256	**VTI**	**VT27C256-20**	★4265 ★4273 3824-21
		VT27C256-25	★4265 ★4273 3824-43
		VT27C256-30	★4265 ★4273 3824-67
27C32	National	NMC27C32-35	3820-96
		NMC27C32-45	3820-105
	Panatech	**RD27C32-25**	★4133 3820-78
		RD27C32-30	★4133 3820-85
		RD27C32-35	★4133 3820-93
27C512	Fujitsu	MBM27C512-20	3824-92
	Panatech	TMS27C512	3824-100
		TMS27C512-2	3824-91
		TMS27C512-3	3824-107
		TMS27C512-4	3825-1
	TI	**TMS27C512**	★4211
		TMX27C512	★4212
	VTI	**VT27C512**	★4265 ★4274 3824-96
		VT27C512-20	★4265 ★4274 3824-93
		VT27C512-25	★4265 ★4274 3824-95
		VT27C512-30	★4265 ★4274 3824-103
27C58	National	NMC27C58	3817-160
27C64	Fujitsu	27C64	¶ 436-15 ¶ 436-16
		MBM27C64	¶ 436-12
		MBM27C64-20	3821-81
		MBM27C64-25	3822-1
		MBM27C64-25W	3821-110
		MBM27C64-25X	3821-111
		MBM27C64-30	3822-28
		MBM27C64-30W	3822-29
		MBM27C64-30X	3822-26
	Hitachi	HN27C64-20	3821-83
		HN27C64FP-20	3821-84
		HN27C64G-15	3821-72
	Hyundai	HY27C64-15	3821-73
		HY27C64-20	3821-85
		HY27C64-25	3822-2
		HY27C64-30	3822-30
	Intel	**27C64**	★4078 3821-86
		27C64-1	★4078 3821-1
		27C64-15	★4078 3821-2
		27C64-150	★4078 3821-3
		27C64-2	★4078 3821-8
		27C64-20	★4078 3821-9
		27C64-200	★4078 3821-10
		27C64-25	★4078 3821-15
		27C64-250	★4078 3821-16
		27C64-3	★4078 3821-20
		27C64-30	★4078 3821-21
		27C64-300	★4078 3821-22
	ICT	27C64A-15	3821-74
		27C64A-20	3821-88
		27C64A-3	3822-31
	NEC		
		μPD27C64-20	3821-89
		μPD27C64-25	3822-3
			(Continued)

¶ Indicates page number in Application Note Directory.
★ Indicates additional data is provided on the page noted.

Base Number	Source	Device	Page-Line
27C64	NEC	μPD27C64-30	3822-32
	Panatech	**RD27C64-28**	★**4133** 3822-4
		RD27C64-30	★**4133** 3822-33
	Rockwell	R27C64-25	3821-112
		R27C64-35	3822-51
	S-MOS	**SPM27C64-15**	★**4178** 3821-75
		SPM27C64-20	★**4178** 3821-91
	Signetics	27C64-20	3821-92
		27C64-25	3822-6
		27C64-30	3822-34
	TI	**TMS27C64-17**	★**4212** 3821-78
		TMS27C64-20	★**4212** 3821-93
		TMS27C64-25	★**4212** 3822-7
		TMS27C64-30	★**4212** 3822-35
		TMS27C64-45	★**4212** 3822-61
	VTI	**VT27C64**	★**4265** ★**4271** 3821-94
		VT27C64-17	★**4265** ★**4271** 3821-77
		VT27C64-20	★**4265** ★**4271** 3821-82
		VT27C64-25	★**4265** ★**4271** 3821-113
		VT27C64-30	★**4265** ★**4271** 3822-27
27C65	Fujitsu	MBM27C65-35	3813-86
27HC64	**Goldstar**	**GM27HC64**	★**4022** 3821-35
27L2	**TI**	**TLC27L2AC**	★ **718** 3363-98
		TLC27L2AM	★ **718** 3363-99
		TLC27L2BC	★ **718** 3362-29
		TLC27L2BM	★ **718** 3362-30
		TLC27L2C	★ **718** 3368-5
		TLC27L2M	★ **718** 3368-6
27L203	Cypress	CY27L203C	3831-85
27L4	**TI**	**TLC27L4AM**	★ **719** 3371-4
		TLC27L4BM	★ **719** 3370-4
		TLC27L4M	★ **719** 3373-13
27LS00	AMD	AM27LS00AC	3832-53
		AM27LS00AM	3832-60
		AM27LS00C	3832-61
		AM27LS00LC	3832-78
		AM27LS00LM	3832-80
		AM27LS00M	3832-69
27LS01	AMD	AM27LS01AC	3832-57
		AM27LS01AM	3832-58
		AM27LS01LC	3832-77
		AM27LS01LM	3832-79
		AM27LS01M	3832-67
27LS02	AMD	AM27LS02C	3831-87 3831-111
		AM27LS02M	3831-114
27LS03	AMD	AM27LS03C	3831-90 3831-112
		AM27LS03M	3831-115
	Cypress	CY27LS03M	3831-109
27LS06	AMD	AM27LS06C	3831-88
		AM27LS06M	3831-93
27LS07	AMD	AM27LS07C	3831-91
		AM27LS07M	3831-103
	Cypress	CY27LS07C	3831-86
27LS18	AMD	AM27LS18C	3814-48
27LS185	AMD	AM27LS185C	3818-36
		AM27LS185M	3818-43
27LS19	AMD	AM27LS19C	3814-53
		AM27LS19M	3814-61
27M2	**TI**	**TLC27M2AC**	★ **718** 3363-100
		TLC27M2AM	★ **718** 3363-101
		TLC27M2BC	★ **718** 3362-31
		TLC27M2BM	★ **718** 3362-32
		TLC27M2C	★ **718** 3368-7
		TLC27M2M	★ **718** 3368-8
27M4	**TI**	**TLC27M4BM**	★ **719** 3371-5
		TLC27M4M	★ **719** 3373-14
27P32	**TI**	**TMS27P32A-25**	★**4217** 3820-84
		TMS27P32A-30	★**4217** 3820-91
		TMS27P32A-45	★**4217** 3820-111
27P64	**TI**	**TMS27P64-25**	★**4218** 3822-24
		TMS27P64-30	★**4218** 3822-50
		TMS27P64-45	★**4218** 3822-77
27PC128	Panatech	TMX27PC128	3823-18
		TMX27PC128-2	3822-101
		TMX27PC128-3	3823-44
		TMX27PC128-4	3823-65
	TI	**TMX27PC128**	★**4219**
27PC256	**TI**	**TMX27PC256**	★**4220** 3824-35
		TMX27PC256-2	★**4220** 3824-13
		TMX27PC256-3	★**4220** 3824-61
27PS181	AMD	AM27PS181	3817-48
27PS185	AMD	AM27PS185C	3818-37
		AM27PS185M	3818-44
27PS191	AMD	AM27PS191C	3819-7
		AM27PS191M	3819-44
27PS281	AMD	AM27PS281	3817-49
27PS291	AMD	AM27PS291AM	3819-45
		AM27PS291C	3819-8
27PS41	AMD	AM27PS41	3820-9
27S02	AMD	AM27S02AC	3831-24
		AM27S02AM	3831-31
		AM27S02C	3831-42
		AM27S02M	3831-61
27S03	AMD	AM27S03AC	3831-27
		AM27S03AM	3831-34
		AM27S03C	3831-52
		AM27S03M	3831-62
	Cypress	CY27S03AC	3831-17
		CY27S03AM	3831-18
		CY27S03C	3831-38
		CY27S03M	3831-39
27S06	AMD	AM27S06AC	3831-25
		AM27S06AM	3831-32
		AM27S06C	3831-26
		AM27S06M	3831-33
27S07	AMD	AM27S07AC	3831-28
		AM27S07AM	3831-35
		AM27S07C	3831-29
		AM27S07M	3831-36
	Cypress	CY27S07AC	3831-19
		CY27S07AM	3831-110
27S12	AMD	AM27S12AC	3815-23
		AM27S12AM	3815-28
		AM27S12C	3815-38
		AM27S12M	3815-55
27S13	AMD	AM27S13AC	3815-24
		AM27S13AM	3815-30
		AM27S13C	3815-41
		AM27S13M	3815-56
27S15	AMD	AM27S15C	3816-37
		AM27S15M	3816-65
27S18	AMD	AM27S18AC	3814-16
		AM27S18AM	3814-31
		AM27S18C	3814-40
		AM27S18M	3814-49
27S180	AMD	AM27S180AC	3817-70
		AM27S180AM	3817-98
		AM27S180C	3817-116
		AM27S180M	3817-142
27S181	AMD	AM27S181AC	3817-75
		AM27S181AM	3817-100
		AM27S181C	3817-120
		AM27S181M	3817-144
	Motorola	MCM27S181	3817-79
27S184	AMD	AM27S184AC	3818-4
		AM27S184AM	3818-13
		AM27S184C	3818-19
		AM27S184M	3818-28
27S185	AMD	AM27S185AC	3818-6
		AM27S185AM	3818-15
		AM27S185C	3818-20
		AM27S185M	3818-30
27S19	AMD	AM27S19AC	3814-19
		AM27S19AM	3814-35
		AM27S19C	3814-42
		AM27S19M	3814-54
	Motorola	MCM27S19	3814-21
27S190	AMD	AM27S190AC	3818-88
		AM27S190C	3819-3
		AM27S190M	3819-41
27S191	AMD	AM27S191	3819-9
		AM27S191A	3818-91
		AM27S191AM	3819-10
	Motorola	MCM27S191	3819-18
27S20	AMD	AM27S20AC	3814-79
		AM27S20AM	3814-88
		AM27S20C	3814-95
		AM27S20M	3814-112
27S21	AMD	AM27S21AC	3814-81
		AM27S21AM	3814-90
		AM27S21C	3814-98
		AM27S21M	3814-116
27S25	AMD	AM27S25AC	3815-74
		AM27S25AM	3815-79
		AM27S25C	3815-82
		AM27S25M	3815-84
	Motorola	MCM27S25A	3815-104
27S27	AMD	AM27S27C	3815-81
		AM27S27M	3815-83
	Motorola	MCM27S27A	3815-98
27S28	AMD	AM27S28AC	3815-89
		AM27S28AM	3815-108
		AM27S28C	3816-19
		AM27S28M	3816-43
27S280	AMD	AM27S280AC	3817-71
		AM27S280AM	3817-99
		AM27S280C	3817-117
		AM27S280M	3817-143
27S281	AMD	AM27S281AC	3817-76
		AM27S281AM	3817-101
		AM27S281C	3817-121
		AM27S281M	3817-145
	Motorola	MCM27S281	3817-80
27S29	AMD	AM27S29AC	3815-94
		AM27S29AM	3816-5
		AM27S29C	3816-20
		AM27S29M	3816-49
	Motorola	MCM27S29A	3815-96
27S290	AMD	AM27S290AC	3818-89
		AM27S290AM	3819-4
		AM27S290C	3819-5
27S291	AMD	AM27S291	3819-11
		AM27S291A	3818-92
		AM27S291AM	3819-12
		AM27S291M	3819-46
27S31	AMD	AM27S31AC	3815-99
		AM27S31AM	3816-13
		AM27S31C	3816-21
		AM27S31M	3816-50
	Motorola	MCM27S31A	3815-100
27S32	AMD	AM27S32AC	3816-89
		AM27S32AM	3816-100
		AM27S32C	3817-16
		AM27S32M	3817-32
27S33	AMD	AM27S33AC	3816-90 3816-92
		AM27S33AM	3817-2
		AM27S33C	3817-19
		AM27S33M	3817-33
27S35	AMD	AM27S35AC	3817-50
		AM27S35AM	3817-51
		AM27S35C	3817-52
		AM27S35M	3817-53
	Motorola	MCM27S35A	3817-68
27S37	AMD	AM27S37	3817-72
		AM27S37A	3817-54
	Motorola	MCM27S37A	3817-69
27S41	AMD	AM27S41	3820-10
		AM27S41A	3819-118
		AM27S41AM	3820-11
		AM27S41M	3820-23
27S43	AMD	AM27S43	3820-39
		AM27S43A	3820-35
27S45	AMD	AM27S45	3818-104
		AM27S45A	3818-102
	Motorola	MCM27S45A	3818-86
27S47	AMD	AM27S47	3818-105
		AM27S47A	3818-103
	Motorola	MCM27S47A	3818-87
27S49	AMD	AM27S49AC	3821-33
		AM27S49AM	3821-51
		AM27S49C	3821-52
		AM27S49M	3821-63
27S65	AMD	AM27S65AC	3816-81
		AM27S65AM	3816-84
		AM27S65C	3816-85
		AM27S65M	3816-88
27S75	AMD	AM27S75AC	3817-166
		AM27S75AM	3818-1
		AM27S75C	3818-2
		AM27S75M	3818-3
27S85	AMD	AM27S85AC	3819-110
		AM27S85AM	3819-113
		AM27S85C	3819-114
		AM27S85M	3819-117
28	**Dense-Pac**	**DPN28**	★**4008** 3812-65
	PMI	MUX-28	¶ 401-3
		MUX-28A	2831-35
		MUX-28B	2831-37
		MUX-28E	2831-36
		MUX-28F	2831-38
	TeledyneC	CDA28A	2827-115
280	Signetics	TCA280A	3405-137
2800	**CalDevices**	**CHA2800**	★**4610** 4440-34
		DLM2800	★**4605** 4440-35
	Cherry	CS2800	4462-9
	Inmos	**IMS2800-10**	★**4045** 3828-85
		IMS2800-12	★**4045** 3829-1
		IMS2800-15	★**4045** 3829-34
		IMS2800-60	★**4045** 3828-74
		IMS2800-80	★**4045** 3828-76
	Intech	ULN-2800A	¶ 398-17
	Motorola	**MCA2800ALS**	★**4718** 4451-47
	National	MCA2800ALS	¶ 443-8
	Sprague	ULN-2800A	¶ 398-10 ¶ 399-2
	TRW-Semi	CA2800	3307-116
2801	DataTrans	DT2801	2031-18
	Inmos	**IMS2801-10**	★**4045** 3828-86
		IMS2801-12	★**4045** 3829-2
		IMS2801-15	★**4045** 3829-35
		IMS2801-60	★**4045** 3828-75
		IMS2801-80	★**4045**

(Continued)

Arranged alphanumerically from left to right.

Base Number	Source	Device	Page-Line
2801	Inmos	IMS2801-80	3828-77
	Motorola	**MC2801**	★ **3613**
			3325-97
		MCM2801	3811-12
		ULN2801	★ **3212**
			2895-9
	SGS	ULN2801A	2895-10
	Sprague	**ULN-2801A**	★ **3269**
			2895-11
			3311-5
		ULS-2801	2895-14
			3311-10
2802	AMD	AM2802C	3854-5
		AM2802M	3854-6
	Motorola	MCM2802	3811-20
		ULN2802	★ **3212**
			2895-17
	SGS	ULN2802A	2895-18
	Sprague	**ULN-2802A**	★ **3269**
			2895-19
			3311-6
		ULS-2802	2895-22
			3311-11
2803	AMD	AM2803C	3854-10
		AM2803M	3854-11
	DataTrans	DT2803	2031-25
	Motorola	**ULN2803**	★ **3212**
			2894-151
	Samsung	KA2803	3327-140
	SGS	ULN2803A	2894-154
	Sprague	**ULN-2803A**	★ **3269**
			2894-157
			3311-7
		ULS-2803	2894-163
			3311-12
2804	AMD	AM2804C	3854-14
		AM2804M	3854-15
	EXEL	XL2804A-250	3811-81
		XL2804A-300	3811-89
		XL2804A-350	3811-96
		XL2804A-450	3811-99
	Motorola	**ULN2804**	★ **3212**
			2894-137
	Samsung	KA2804	3317-9
	SGS	ULN2804A	2894-140
	Sprague	**ULN-2804A**	★ **3269**
			2894-141
			¶ 399-9
			3311-8
		ULS-2804	2894-144
			3311-13
	Xicor	**X2804A**	★ **734**
			★ **4279**
			3811-90
			¶ 432-5
			¶ 432-7
			¶ 435-4
		X2804A-25	★ **734**
			★ **4279**
			3811-82
		X2804A-35	★ **734**
			★ **4279**
			3811-97
		X2804A-45	★ **734**
			★ **4279**
			3811-100
		X2804AM	★ **734**
			★ **4279**
			3811-91
		X2804AM-35	★ **734**
			★ **4279**
			3811-98
		X2804AM-45	★ **734**
			★ **4279**
			3811-101
2805	DataTrans	DT2805	2031-19
	SGS	ULN2805A	2894-155
	Sprague	**ULN-2805A**	★ **3269**
			2894-158
			3311-9
		ULS-2805	2894-164
			3311-14
2806	DataTrans	DT2806	2031-21
2808	DataTrans	DT2808	2031-24
	ThomsonCSF	μA2808	3386-32

Base Number	Source	Device	Page-Line
281	MicroInds	BLX281A	2036-61
	National	AM281	2823-1
			2823-5
			2823-19
2810	GI	ER2810	3812-10
			¶ 433-1
		ER2810HR	3812-11
	TRW-Semi	CA2810	3307-117
28101	OKI	MSM28101A	3808-23
2811	**Sprague**	**ULN-2811A**	★ **3269**
			2895-12
			3311-15
		ULS-2811	2895-15
			3311-20
2812	AMD	AM2812ADC	3809-23
		AM2812AL	3809-24
		AM2812C	3809-20
		AM2812L	3809-21
	Plessey	MJ2812	3809-22
	Sprague	**ULN-2812A**	★ **3269**
			2895-20
			3311-16
		ULS-2812	2895-23
			3311-21
	ThomsonCSF	μA2812	3387-20
2813	AMD	AM2813AC	3809-28
		AM2813AL	3809-29
		AM2813C	3809-25
		AM2813L	3809-26
	Plessey	MJ2813	3809-27
	Sprague	**ULN-2813A**	★ **3269**
			2894-159
			3311-17
		ULS-2813	2894-165
			3311-22
2814	**Sprague**	**ULN-2814A**	★ **3269**
			2894-142
			3311-18
		ULS-2814	2894-145
			3311-23
2815	Intel	2815	3812-35
		2815-3	3812-85
		2815-4	3812-109
	Sprague	ULN-2815A	2894-160
			3311-19
		ULS-2815	2894-166
			3311-24
2816	EXEL	XL2816A-250	3812-34
		XL2816A-350	3812-84
		XL2816A-450	3812-108
	Intel	2816	3812-36
			¶ 433-12
		2816-3	3812-86
		2816-4	3812-110
		2816A	3812-37
			¶ 433-13
		2816A-3	3812-87
		2816A-4	3812-111
		2816B	3812-6
		2816B-1	3812-4
		2816B-2	3812-7
		2816B-3	3812-8
		2816B-4	3812-9
		M2816A	3812-38
	National	NMC2816	¶ 434-7
			¶ 434-10
		NMC2816-25	3812-39
		NMC2816-35	3812-88
		NMC2816-45	3812-112
		NMC2816E-25	3812-40
		NMC2816E-35	3812-89
		NMC2816E-45	3812-113
	OKI	**MSM2816**	★ **4732**
			3812-54
	Rockwell	R2816A-25	3812-41
		R2816A-3	3812-67
		R2816A-35	3812-90
	Samsung	**KM2816A**	★ **4140**
			3812-70
		KM2816A-25	★ **4140**
			3812-44
		KM2816A-35	★ **4140**
			3812-93
	SEEQ	**2816A-250**	★ **4146**
			3812-45
		2816A-300	★ **4146**
			(Continued)

Base Number	Source	Device	Page-Line
2816	SEEQ	2816A-300	3812-71
		2816A-350	★ **4146**
			3812-94
		2816AH-250	★ **4146**
			3812-57
		2816AH-300	★ **4146**
			3812-78
		M2816A-250	★ **4146**
			3812-58
		M2816A-350	★ **4146**
			3812-105
	SGS	M2816	3812-21
	Xicor	**X2816A**	★ **734**
			★ **4279**
			3812-75
			¶ 432-5
			¶ 432-7
			¶ 432-20
			¶ 435-4
		X2816A-25	★ **734**
			★ **4279**
			3812-49
		X2816A-35	★ **734**
			★ **4279**
			3812-96
		X2816A-45	★ **734**
			★ **4279**
			3812-114
		X2816AM	★ **734**
			★ **4279**
			3812-76
		X2816AM-35	★ **734**
			★ **4279**
			3812-97
		X2816AM-45	★ **734**
			★ **4279**
			3812-115
		X2816B	★ **734**
			★ **4279**
			3812-19
		X2816H	★ **734**
			★ **4279**
			3812-14
2817	AMD	AM2817A-2	3812-23
		AM2817A-20	3812-24
		AM2817A-25	3812-50
		AM2817A-3	3812-99
		AM2817A-35	3812-100
	EXEL	XL2817A-200	3812-25
		XL2817A-250	3812-51
		XL2817A-350	3812-101
	Intel	2817	¶ 433-13
		2817A	3812-52
		2817A-1	3812-5
		2817A-2	3812-26
		2817A-3	3812-102
		2817A-4	3812-116
		M2817	3812-117
	Samsung	**KM2817A-25**	★ **4140**
			3812-55
		KM2817A-30	★ **4140**
			3812-77
		KM2817A-35	★ **4140**
			3812-104
	SEEQ	**2817A-200**	★ **4148**
			3812-28
		2817A-250	★ **4148**
			3812-61
		2817A-300	★ **4148**
			3812-79
		2817AH-200	★ **4148**
			3812-29
		2817AH-250	★ **4148**
			3812-62
		2817AH-300	★ **4148**
			3812-80
		M2817A-200	★ **4148**
			3812-32
		M2817A-250	★ **4148**
			3812-64
		M2817A-300	★ **4148**
			3812-83
2818	DataTrans	DT2818	2031-23
	ThomsonCSF	μA2818	3388-122
	Xicor	X2818A	¶ 432-5
2819	EXEL	XL2819A-300	3812-66

Base Number	Source	Device	Page-Line
282	Analogic	MP282A	3403-172
	National	AM282	2823-28
			2823-32
2820	TRW-Semi	CA2820	3307-118
28201	OKI	MSM28201A	3808-24
2821	**Sprague**	**ULN-2821A**	★ **3269**
			2895-13
			3311-29
		ULS-2821	2895-16
			3311-34
28214	GouldAMI	S28214	843-131
2822	SGS	TDA2822M	3318-65
	Sprague	**ULN-2822A**	★ **3269**
			2895-21
			3311-30
		ULS-2822	2895-24
			3311-35
2823	**Sprague**	**ULN-2823A**	★ **3269**
			2894-161
			3311-31
		ULS-2823	2894-167
			3311-36
2824	**Sprague**	**ULN-2824A**	★ **3269**
			2894-143
			3311-32
		ULS-2824	2894-146
			3311-37
	ThomsonCSF	μA2824	3389-84
2825	**Sprague**	**ULN-2825A**	★ **3269**
			2894-162
			3311-33
		ULS-2825	2894-168
			3311-38
	Unitrode	**UC2825**	★ **3739**
			3398-123
28256	**Xicor**	**X28256**	★ **4280**
			3813-100
			¶ 432-8
2827	Micrel	MIC2827	3854-20
2830	**MicroNet**	**MN2830**	★ **3202**
	TRW-Semi	CA2830	3307-119
2831	**Motorola**	**MC2831**	★ **3613**
			3379-88
2832	DataTrans	DT2832	2030-2
2833	AMD	AM2833C	3857-60
		AM2833M	3857-61
	Micrel	MIC2833	3857-54
		MIC2833A	3857-56
		MIC2833B	3857-57
		MIC2833C	3857-58
		MIC2833M	3857-55
	Motorola	MCM2833	¶ 433-1
			¶ 433-14
			¶ 433-15
		MCM2833-15	★ **4118**
			★ **4122**
			3812-118
		MCM2833-20	★ **4118**
			★ **4122**
			3812-119
	NEC	μPD2833	3375-37
2834	DataTrans	DT2834	2030-3
	NEC	μPD2834	3375-38
	Unitrode	**UC2834**	★ **3740**
			3401-116
284	AD	AD284	¶ 404-15
	National	AM284	2827-43
			2827-47
2840	SGS	UC2840	3396-65
	SiliconG	SG2840	3401-142
	TRW-Semi	CA2840	3307-120
	Unitrode	**UC2840**	★ **3739**
			3397-61
	Western	WD2840	1458-23
2841	AMD	AM2841A	3809-44
		AM2841C	3809-39
		AM2841M	3809-40
	Plessey	MJ2841	3809-42
	SiliconG	SG2841	2898-47
	Sprague	**UDN-2841B**	★ **3269**
			3310-12
	TI	UDN2841	3310-26
2842	Cherry	CS2842A	3395-74
	IPS	**IP2842**	★ **3599**
			3395-127
	Siltronics	S2842	3378-33
			(Continued)

¶ Indicates page number in Application Note Directory.
★ Indicates additional data is provided on the page noted.

Base Number	Source	Device	Page-Line
2842	TRW-Semi	CA2842	3307-121
	Unitrode	**UC2842**	★**3739**
			3398-132
2843	**IPS**	**IP2843**	★**3599**
			3395-128
	Unitrode	**UC2843**	★**3739**
			3398-133
2844	Cherry	CS2844A	3395-75
2845	**Sprague**	**UDN-2845B**	★**3269**
			3310-13
			¶ 398-10
	TI	UDN2845	3310-27
2846	Sprague	UDN-2846B	¶ 398-10
	Unitrode	**UC2846**	★**3739**
			3398-134
2847	AMD	AM2847C	3857-28
		AM2847M	3857-25
	Fairchild	F2847	3857-29
		F2847L	3857-30
		F2847LM	3857-26
		F2847M	3857-27
	Unitrode	**UC2847**	★**3739**
			3398-135
285	**Motorola**	**LM285-1**	★**3628**
			3402-8
		LM285-2	★**3628**
			3402-53
	National	AM285	2827-62
			2827-66
		LM285	3402-12
		LM285-1	3402-27
		LM285-2	3402-67
	SGS	LS285A	3381-73
			3382-106
2850	Siltronics	S2850	3327-141
	Sprague	UDN-2850A	¶ 398-8
	TRW-Semi	CA2850	3307-122
2851	TRW-Semi	CA2851	3307-123
2855	AMD	AM2855	3857-38
2856	AMD	AM2856	3857-45
2857	AMD	AM2857C	3857-49
2859	GouldAMI	S2859	3382-65
286	AMD	iAPX286	1433-37
	AD	AD286	¶ 404-15
	Intel	iSBC286/10	2023-6
		iSBC286/100	2021-40
		iSBC286/10A	2021-31
		iSBC286/12	2021-32
	Lomas	Lightning 286	2027-3
	Microbar	DBC286M	2025-6
2861	ThomsonCSF	SFC2861AM	3355-52
		SFC2861C	3357-86
		SFC2861M	3350-42
2864	**Dense-Pac**	**DPS2864**	★**4008**
			3843-53
	EXEL	XL2864A-200	3813-21
		XL2864A-250	3813-34
		XL2864A-300	3813-47
		XL2864A-350	3813-64
		XL2864A-450	3813-69
	Intel	**2864**	★**4068**
	National	NMH2864	3813-72
		NMH2864C	3813-73
	OKI	**MSM2864A-25**	★**4732**
			3812-123
		MSM2864A-30	★**4732**
			3813-2
		MSM2864A-35	★**4732**
			3813-3
	Samsung	**KM2864A**	★**4140**
			3813-25
	SEEQ	**2864-250**	★**4149**
			3813-41
		2864-300	★**4149**
			3813-57
		2864-350	★**4149**
			3813-42
		2864H-250	★**4149**
			3813-43
		2864H-300	★**4149**
			3813-58
		M2864-250	★**4149**
			3813-44
		M2864H-300	★**4149**
			3813-82
			(Continued)

Base Number	Source	Device	Page-Line
2864	**Xicor**	**X2864A**	★ **734**
			★**4280**
			3813-56
			¶ 432-19
			¶ 432-20
		X2864A-20	★ **734**
			★**4280**
			3813-28
		X2864A-25	★ **734**
			★**4280**
			3813-30
		X2864A-35	★ **734**
			★**4280**
			3813-60
		X2864A-45	★ **734**
			★**4280**
			3813-75
		X2864AM	★ **734**
			★**4280**
			3813-46
		X2864AM-25	★ **734**
			★**4280**
			3813-29
		X2864AM-35	★ **734**
			★**4280**
			3813-61
		X2864AM-45	★ **734**
			★**4280**
			3813-68
		X2864B	★ **734**
			★**4280**
			3813-17
		X2864H	★ **734**
			★**4280**
			3813-5
2865	EXEL	XL2865A-200	3813-22
		XL2865A-250	3813-35
		XL2865A-300	3813-48
		XL2865A-350	3813-65
		XL2865A-450	3813-70
	Samsung	KM2865A	3813-26
287	**MicroNet**	**MN287**	★**3202**
	National	AM287	2825-35
			2825-39
2870	Mostek	MK2870	1453-24
	Telefunken	U2870	1453-22
	TRW-Semi	CA2870	3307-124
2871	TRW-Semi	CA2871	3307-125
2875	TRW-Semi	CA2875	3307-126
2876	TRW-Semi	CA2876	3307-127
2877	National	LM2877	3318-182
2878	National	LM2878	3318-150
	Sprague	**UDN-2878W**	★**3269**
			2897-151
			¶ 398-16
2879	National	LM2879	3318-151
	Sprague	**UDN-2879W**	★**3269**
			2898-46
			¶ 398-16
288	**Dense-Pac**	**DPS288KU**	★**4008**
			3846-28
			3846-81
		DPX288KU	★**4008**
			3846-29
			3846-54
	National	AM288	2825-56
			2825-60
	SGS	LS288	3381-41
	TI	**TL288**	★ **718**
2880	TRW-Semi	CA2880	3307-128
2887	National	LM2887	3324-136
2889	National	LM2889	3327-26
289	AD	AD289	¶ 404-15
2895	National	LM2895	3318-35
2896	National	LM2896	3318-183
28C256	**SEEQ**	**28C256-250**	★**4150**
			3813-98
		M28C256-250	★**4150**
			3813-99
	Xicor	**X28C256**	★**4280**
			3813-94
28C64	Fujitsu	MBM28C64-25	3813-84
		MBM28C64-35	3813-87
	SEEQ	28C64	3813-51
	Xicor	**X28C64**	★**4280**
			3813-16

Base Number	Source	Device	Page-Line
28C65	Fujitsu	MBM28C65-25	3813-85
28H63	**VTI**	**VT28H63**	★**4265**
			3813-8
28H64	**VTI**	**VT28H64**	★**4265**
			3813-9
28L166	TI	TBP28L166	3819-57
28L22	**TI**	**TBP28L22**	★ **729**
			3815-19
		TBP28L22M	★ **729**
			3815-20
28L42	**TI**	**TBP28L42**	★ **729**
			3816-23
28L46	TI	TBP28L46	3816-67
28L86	**TI**	**TBP28L86A**	★ **729**
			3817-140
		TBP28L86M	★ **729**
			3817-141
28LA22	TI	TBP28LA22	3815-17
28R165	TI	TBP28R165	3817-163
28S166	TI	TBP28S166	3818-81
28S2708			
	TI	TBP28S2708A	3817-139
28S42	**TI**	**TBP28S42**	★ **729**
			3816-36
		TBP28S42M	★ **729**
			3816-54
			3816-55
			3816-62
			3816-63
28S46	TI	TBP28S46	3816-42
		TBP28S46M	3816-59
28S86	TI	TBP28S86A	3817-118
28SA42	TI	TBP28SA42	3816-45
28SA46	TI	TBP28SA46	3816-48
28SA86	TI	TBP28SA86A	3817-119
		TBP28SA86A-50	3819-6
29	**OKI**	**OCS29**	★**4733**
	TeledyneC	CDA29A	2826-77
290	AD	AD290A	¶ 404-15
	National	AM290	2826-20
			2826-22
	SGS	L290	3399-107
2900	AMD	AM2900	¶ 375-3
			¶ 377-6
	Harris	HA-2900	¶ 408-6
	Motorola	**LM2900**	★**3618**
			3334-189
		MCA2900ETL	★**4718**
			4451-46
	National	IDM2900	¶ 378-1
		LM2900	3334-191
	Raytheon	LM2900	3334-193
2901	AMD	AM2901	844-77
		AM2901AC	856-3
		AM2901AM	856-4
		AM2901B	1411-8
		AM2901BC	856-5
			1448-42
		AM2901BM	856-6
			1448-43
		AM2901C	856-7
			1411-9
		AM2901M	856-8
	Cypress	CY2901	844-80
		CY2901B	1411-12
		CY2901BC	1448-49
		CY2901BM	1448-50
		CY2901C	1411-13
		CY2901CC	1448-51
		CY2901CM	1448-52
	Fairchild	μA2901	3316-40
	Motorola	**LM2901**	★**3631**
			3316-41
	National	ADM2901AC	856-12
		IDM2901	844-83
		IDM2901A	¶ 379-8
		IDM2901A-2	1448-60
			1411-19
		IDM2901AC	1448-61
		IDM2901AM	856-13
			1448-62
		LM2901	3316-42
	Raytheon	LM2901	3316-43
	SGS	LM2901	3316-44
	Signetics	**LM2901**	★**3721**
			★**3722**
			(Continued)

Base Number	Source	Device	Page-Line
2901	Signetics	LM2901	3316-45
	ThomsonCSF	LM2901	3316-46
		SFC-2901	844-85
		SFC-2901B	856-16
			1448-63
			1411-22
		SFC-2901C	1448-64
			1411-23
	Unitrode	**UC2901**	★**3740**
			3401-106
	VTI	**VSYC2901**	★**4811**
2901X4	IMI	2901X4	1448-127
			1435-26
2902	AMD	AM2902AC	855-81
			1448-114
		AM2902AM	855-82
			1448-115
	Motorola	**LM2902**	★**3618**
			3334-108
	National	IDM2902C	1448-118
		IDM2902M	1448-119
		LM2902	3334-110
	Raytheon	LM2902	3334-112
	SGS	LM2902	3373-2
	ThomsonCSF	LM2902	3334-142
			3373-4
		SFC-2902A	1448-120
2903	AMD	AM2903	844-78
			1411-10
		AM2903AC	1448-44
		AM2903AM	1448-45
		AM2903C	856-9
			1448-46
		AM2903M	856-10
			1448-47
	Motorola	**LM2903**	★**3631**
			3314-49
	National	LM2903	3314-50
	SGS	LM2903	3314-51
	Signetics	**LM2903**	★**3725**
			3314-52
	ThomsonCSF	LM2903	3314-53
		SFC-2903	844-86
			1448-65
			1411-24
	Unitrode	UC2903	3401-107
2904	AMD	AM2904C	1448-105
		AM2904M	1448-106
	Hitachi	HD2904	2881-19
	Motorola	**LM2904**	★**3617**
			3334-109
	National	LM2904	3334-111
	RCA	CA2904	3334-113
	ThomsonCSF	LM2904	3334-114
			3367-53
2905	AMD	AM2905C	2889-31
			1448-66
		AM2905M	2889-24
			1448-67
	Hitachi	HD2905	2885-18
	National	LM2905	3383-11
2906	AMD	AM2906C	2889-32
			1448-68
		AM2906M	2889-25
			1448-69
	SGS	LM2906	3367-52
	Unitrode	**UC2906**	★**3740**
			3319-134
2907	AMD	AM2907C	2889-29
			1448-70
		AM2907M	2889-22
			1448-71
	Cherry	CS2907	3399-102
			3400-105
		MC2907	2895-127
	National	LM2907	3328-49
			3399-105
			¶ 421-11
2908	AMD	AM2908C	2889-30
		AM2908M	2889-23
2909	AMD	2909	¶ 375-4
		AM2909A	887-40
		AM2909AC	1448-130
		AM2909C	887-41
			1448-131
		AM2909M	887-42
			(Continued)

Arranged alphanumerically from left to right.

PART NUMBER INDEX

Base Number	Source	Device	Page-Line
2909	Cypress	CY2909AC	1448-133
		CY2909AM	1448-134
		CY2909C	1448-135
		CY2909M	1448-136
	National	IDM2909AC	887-47
			1449-1
		IDM2909AM	887-48
			1449-2
	ThomsonCSF	SFC-2909	887-54
			1449-5
		SFC-2909A	1449-6
291	National	AM291	2826-33
			2826-37
	SGS	L291	3399-108
	Siemens	S291	3377-139
	SiliconSys	**SSI291**	★ **3737**
			3380-69
2910	AMD	AM2910C	1462-96
		AM2910M	1462-97
	Intel	2910	3377-143
		2910A	3377-144
		2910A/2911A	¶ 411-5
	National	IDM2910A	1458-35
	OEI	2910	3307-9
			3307-14
	TI	TCM2910A	3377-153
	ThomsonCSF	SFC-2910	1462-103
2911	AMD	2911	¶ 375-4
		AM2911A	887-43
			1448-132
		AM2911C	887-44
		AM2911M	887-45
	Cypress	CY2911AC	1448-137
		CY2911AM	1448-138
		CY2911C	1448-139
		CY2911M	1448-140
	Intel	2911A	3377-47
	National	IDM2911AC	887-49
			1449-3
		IDM2911AM	887-50
			1449-4
	Samsung	KA2911	3327-42
	TI	TCM2911A	3377-55
	ThomsonCSF	SFC-2911	1449-7
		SFC-2911A	887-55
			1449-8
29112	AMD	AM29112	1462-104
29116	AMD	AM29116	1433-33
			¶ 365-13
			¶ 373-18
2912	AMD	AM2912C	2888-51
			1448-72
		AM2912M	2888-52
	Hitachi	HD2912	2892-136
	Intel	2912	¶ 411-5
		2912A	3379-67
	Samsung	KA2912	3327-43
	TI	TCM2912B	3379-77
2913	AMD	AM2913	¶ 377-6
		AM2913C	888-156
			1449-31
		AM2913M	888-157
			1449-32
	Intel	2913	3377-89
			¶ 411-8
	Samsung	KA2913	3327-4
	TI	TCM2913	3377-94
2914	AMD	AM2914	¶ 377-6
		AM2914C	1449-28
			1469-144
		AM2914M	1449-29
			1469-145
	Intel	2914	3377-90
			¶ 411-8
	Samsung	KA2914	3327-5
	TI	TCM2914	3377-95
	ThomsonCSF	SFC-2914	1449-30
			1469-149
2915	AMD	AM2915AC	2888-31
			1448-73
		AM2915AM	2888-14
			1448-74
	Hitachi	HD2915	2885-17
	ThomsonCSF	SFC-2915A	2888-32
			1448-85
2916	AMD	AM2916AC	2888-33
			1448-75
		AM2916AM	2888-15
			1448-76
	Hitachi	HD2916	2892-137
	OKI	MSM2916	3849-61
	Samsung	KA2916	3327-44
	TI	TCM2916	3377-96
			3377-133
2917	AMD	AM2917AC	2888-34
			1448-77
		AM2917AM	2888-16
			1448-78
	Cherry	CS2917	3327-150
			3328-47
			3399-103
			3400-106
	Exar	**XR2917**	★ **3552**
			3328-48
			3399-104
	National	LM2917	3328-50
			3399-106
			¶ 421-11
	TI	TCM2917	3377-71
			3377-97
	ThomsonCSF	SFC-2917	2888-35
			1448-86
2918	AMD	AM2918C	864-307
			1449-49
		AM2918M	864-308
			1449-50
	ThomsonCSF	SFC-2918	864-309
			1449-51
2919	AMD	AM2919C	864-178
			1449-46
		AM2919M	864-179
			1449-47
	Hitachi	HD2919	2896-43
	ThomsonCSF	SFC-2919	1449-48
292	AD	AD292A	¶ 404-15
	National	LM292	3307-63
			3365-42
	SGS	L292	3399-109
	Unitrode	**L292**	★ **3741**
			3404-122
2920	AMD	AM2920C	866-100
			1449-56
		AM2920M	866-101
			1449-57
	Intel	2920	844-75
			¶ 360-4
			¶ 360-11
			¶ 360-13
			¶ 365-9
			¶ 421-8
			3404-108
	OEI	2920	3307-10
			3307-15
29203	AMD	AM29203	844-79
			1411-11
2921	AMD	AM2921C	862-80
			1449-70
		AM2921M	862-81
			1449-71
	Intel	2921	844-76
			¶ 365-9
			3404-109
	Samsung	KA2921	3325-107
2922	AMD	2922	¶ 375-4
		AM2922C	880-29
			1449-87
		AM2922M	880-30
			1449-88
2923	AMD	AM2923C	880-71
			1449-89
		AM2923M	880-72
	Hitachi	HD2923	2898-50
2924	AMD	AM2924C	863-104
			1448-89
		AM2924M	863-105
	National	LM2924	3307-65
2925	AMD	AM2925C	1448-87
		AM2925M	1448-88
2926	AMD	AM2926C	1449-42
2927	AMD	AM2927C	1448-79
2928	AMD	AM2928C	1448-80
2929	AMD	AM2929C	1449-43
293	AD	AD293	¶ 404-15
	IPS	**IP293**	★ **3599**
			2895-87
		IP293D	★ **3599**
			2895-86
	Motorola	**LM293**	★ **3631**
			3314-35
		LM293A	★ **3631**
			3313-52
	National	LM293	3314-37
		LM293A	3313-54
	SGS	L293	3399-110
		L293E	2897-140
		LM293	3314-39
		LM293A	3313-56
		M293	3325-95
	Signetics	LM293	3314-41
		LM293A	3314-42
	SiliconG	SG293D	2897-141
	Unitrode	**L293**	★ **3741**
			2895-89
		L293D	★ **3741**
			★ **3741**
			2897-142
		L293E	★ **3741**
			2897-143
2930	National	LM2930-5	3384-23
		LM2930-8	3386-15
2931	Motorola	LM2931-5	3384-6
	National	LM2931	3392-103
		LM2931-5	3384-113
2932	OKI	MSM2932	3849-109
29323	AMD	AM29323	843-81
2933	**Sprague**	**UDN-2933B**	★ **3267**
			★ **3269**
			2895-105
			¶ 398-16
2934	**Sprague**	**UDN-2934B**	★ **3269**
			2895-106
			¶ 398-16
2935	National	LM2935	3384-54
			3392-69
	SGS	LM2935	3384-55
			3392-70
	Sprague	**UDN-2935Z**	★ **3269**
			2895-111
			¶ 398-16
294	AD	AD294A	¶ 404-15
	TI	**TL294**	★ **719**
2940	AMD	AM2940C	1448-91
		AM2940M	1448-92
2941	**Sprague**	**UDN-2941B**	★ **3269**
			2894-44
			¶ 398-16
2942	AMD	AM2942C	1448-93
		AM2942M	1448-94
2943	**Sprague**	**UDN-2943**	★ **3269**
2944	**Sprague**	**UDN-2944W**	★ **3269**
			2898-49
2946	AMD	AM2946C	1448-81
2947	AMD	AM2947C	1448-82
2948	AMD	AM2948C	1448-83
	Sprague	**UDN-2948W**	★ **3269**
			2894-46
2949	AMD	AM2949C	1448-84
	Sprague	UDN-2949Z	¶ 398-10
295	AD	AD295	3306-136
			¶ 404-15
	National	LM295	3398-91
	SGS	L295	2897-134
	Unitrode	**L295**	★ **3741**
			2897-135
2950	AMD	AM2950C	1449-83
		AM2950M	1449-84
	Sprague	**UDN-2950Z**	★ **3269**
			2895-112
			¶ 398-16
29501	AMD	AM29501	844-69
29509	AMD	AM29509	843-85
			1449-9
2951	AMD	AM2951C	1449-85
		AM2951M	1449-86
29510	AMD	AM29510	843-91
			1449-11
29516	AMD	AM29516	843-60
29517	AMD	AM29517	843-61
2952	AMD	AM2952C	1449-74
		AM2952M	1449-75
	Sprague	**UDN-2952**	★ **3269**
			2895-99
		UDN-2952B	¶ 398-16
		UDN-2952W	¶ 398-16
29520	AMD	AM29520	844-92
	TI	**THCT29520**	★ **1350**
29521	AMD	AM29521	844-93
2953	AMD	AM2953C	1449-76
		AM2953M	1449-77
	Sprague	**UDN-2953**	★ **3269**
			2895-100
			¶ 398-16
		UDN2953	¶ 398-16
2954	AMD	AM2954C	864-176
			1449-68
		AM2954M	864-177
29540	AMD	AM29540	844-117
2955	AMD	AM2955C	864-174
			1449-69
		AM2955M	864-175
2956	AMD	AM2956C	875-2
			1449-60
		AM2956M	875-3
	Sprague	UDN-2956A	2894-47
			2896-93
			¶ 402-13
			3310-74
			3381-10
		UDQ-2956R	2895-61
2957	AMD	AM2957C	875-1
			1449-61
	Sprague	**UDN-2957A**	★ **3269**
			2894-48
			2896-94
			3310-75
			3381-11
		UDQ-2957R	2895-62
2958	AMD	AM2958C	1449-54
2959	AMD	AM2959C	1449-55
296	Unitrode	L296	3397-10
2960	AMD	AM2960C	1448-101
		AM2960M	1448-102
	Signetics	**2960**	★ **3221**
			2878-47
2961	AMD	AM2961C	1448-107
		AM2961M	1448-108
29613	**Raytheon**	**29613**	★ **4134**
2962	AMD	AM2962C	1448-109
29621	**Raytheon**	**29621**	★ **4134**
29623	**Raytheon**	**29623**	★ **4134**
			3816-53
29631	**Raytheon**	**29631A**	★ **4134**
			3817-122
			3817-123
29633	**Raytheon**	**29633A**	★ **4134**
			3817-124
			3817-125
			3817-131
			3817-132
		29633C	★ **4134**
			3817-151
2964	AMD	AM2964B	1448-95
		AM2964BC	1448-96
		AM2964BM	1448-97
	Signetics	**2964B**	★ **4173**
			2892-59
2965	AMD	AM2965C	2893-24
			1449-62
		AM2965M	2893-25
			1449-63
	OKI	MSM2965	3851-31
	Sprague	**UDN-2965W**	★ **3269**
			2896-22
			¶ 398-16
29651	**Raytheon**	**29651A**	★ **4134**
			3818-40
		29651C	★ **4134**
			3818-49
		29651M	★ **4134**
			3818-54
29653	**Raytheon**	**29653A**	★ **4134**
			3818-41
		29653C	★ **4134**

(Continued)

¶ Indicates page number in Application Note Directory.
★ Indicates additional data is provided on the page noted.

Base Number	Source	Device	Page-Line
29653	Raytheon	29653C	3818-50
		29653M	**★4134**
			3818-55
2966	AMD	AM2966C	2893-26
			1449-64
		AM2966M	2893-27
			1449-65
29671	**Raytheon**	**29671**	**★4134**
			3820-59
			3820-60
			3820-67
			3820-68
		29671A	**★4134**
			3820-57
			3820-58
			3820-61
			3820-62
29673	**Raytheon**	**29673**	**★4134**
			3820-65
			3820-66
			3820-69
			3820-70
2968	AMD	AM2968	2892-57
			1448-98
29681	**Raytheon**	**29681**	**★4134**
			3819-64
		29681A	**★4134**
			3819-23
			3819-24
			3819-53
			3819-54
29683	**Raytheon**	**29683**	**★4134**
			3819-67
		29683A	**★4134**
			3819-25
			3819-26
			3819-55
			3819-56
2969	AMD	AM2969	2892-50
			1448-121
2970	AMD	AM2970	2892-52
			1448-124
	MicroNet	**MN2970**	**★3202**
	National	IDM2970C	3831-78
29704	AMD	AM29704C	877-49
		AM29704M	877-50
	National	IDM29704C	877-51
		IDM29704M	877-52
			3831-89
29705	AMD	AM29705C	877-61
			3831-79
			1449-35
		AM29705M	877-62
			3831-92
			1449-36
	National	F29705M	3831-80
		IDM29705	3831-81
		IDM29705AC	877-63
			1449-40
		IDM29705AM	877-64
			1449-41
		IDM29705C	877-65
			3831-72
		IDM29705M	877-66
29707	AMD	AM29707	1449-37
2971	AMD	AM2971C	1449-33
		AM2971M	1449-34
29720	AMD	AM29720C	3832-59
		AM29720M	3832-68
29721	AMD	AM29721C	3832-62
		AM29721M	3832-70
2975	**Sprague**	**UDN-2975W**	**★3269**
			2897-136
2976	AMD	AM2976C	2892-31
		AM2976M	2892-32
	Sprague	**UDN-2976W**	**★3269**
			2897-137
29760	AMD	AM29760AM	3814-113
298	AMD	LF298	3403-150
	Burr-Brown	**SHC298AM**	**★3148**
			3403-173
	Fairchild	μA298C	3404-10
	National	LF298	3404-49
		LF298A	3404-50
	SGS	L298	3404-74
	Signetics	**LF298**	**★3725**
			(Continued)

Base Number	Source	Device	Page-Line
298	Signetics	LF298	3404-76
	Unitrode	**L298**	**★3741**
			3400-102
2980	Sprague	UDN-2980	¶ 399-9
		UDN-2980A	¶ 398-8
			¶ 398-10
			¶ 402-13
29803	AMD	29803	¶ 375-4
		AM29803AC	1449-92
		AM29803AM	1449-93
	National	IDM29803C	1449-94
		IDM29803M	1449-95
29806	AMD	AM29806	1449-73
		AM29806C	864-5
		AM29806M	864-6
29809	AMD	AM29809	1449-91
		AM29809C	854-151
		AM29809M	854-152
2981	**Sprague**	**UDN-2981A**	**★3269**
			2895-3
			3310-174
		UDS-2981	2895-6
			3310-178
29811	AMD	29811	¶ 375-4
		AM29811AC	1449-22
		AM29811AM	1449-23
	National	IDM29811C	1449-24
		IDM29811M	1449-25
29818	AMD	AM29818	1449-82
		AM29818C	881-11
		AM29818M	881-12
2982	**Sprague**	**UDN-2982A**	**★3269**
			2894-147
			3310-175
		UDS-2982	2894-149
			3310-179
29821	AMD	AM29821	882-169
29822	AMD	AM29822	882-170
29823	AMD	AM29823	882-158
29824	AMD	AM29824	882-159
29825	AMD	AM29825	882-37
29826	AMD	AM29826	882-38
29827	AMD	AM29827	857-73
29828	AMD	AM29828	857-74
2983	**Sprague**	**UDN-2983A**	**★3269**
			2895-4
			3310-176
		UDS-2983	2895-7
			3310-180
29833	AMD	AM29833	886-114
29834	AMD	AM29834	886-115
2984	**Sprague**	**UDN-2984A**	**★3269**
			2894-148
			3310-177
		UDS-2984	2894-150
			3310-181
29841	AMD	AM29841	876-124
29842	AMD	AM29842	876-125
29843	AMD	AM29843	876-107
29844	AMD	AM29844	876-108
29845	AMD	AM29845	876-85
29846	AMD	AM29846	876-86
2985	Sprague	UDN-2985A	2895-5
29853	AMD	AM29853	886-116
29854	AMD	AM29854	886-117
2986	**Sprague**	**UDN-2986A**	**★3269**
			2895-27
29861	AMD	AM29861	886-122
29862	AMD	AM29862	886-123
29863	AMD	AM29863	886-121
29864	AMD	AM29864	886-120
299	National	LM299	3402-151
			¶ 429-5
		LM299A	3402-152
			¶ 429-5
29901	National	IDM29901C	1449-58
		IDM29901M	1449-59
29902	National	IDM29902C	1449-26
		IDM29902M	1449-27
29903	National	IDM29903C	1449-96
29908	National	IDM29908C	1449-52
		IDM29908M	1449-53
2993	**Sprague**	**UDN-2993B**	**★3269**
			2895-104
			¶ 398-16

Base Number	Source	Device	Page-Line
2998	**Sprague**	**UDN-2998W**	**★3267**
			★3269
			2895-103
29C00	**GESemi**	**GE29C00**	**★4629**
29C01	Calmos	CA29C01	1448-48
			1405-4
	GESemi	**GE29C01**	**★4628**
			1448-55
29C10	**GESemi**	**GE29C10**	**★4627**
			1462-94
		GE29C10-16	**★4627**
			1462-125
29C50	Intel	29C50	3377-103
29C51	Harris	29C51C	3377-102
	Intel	29C51	3377-104
29C520	LogicDev	L29C520	844-94
		L29C520C	837-78
		L29C520M	837-79
29C521	LogicDev	L29C521	844-95
		L29C521C	837-80
		L29C521M	837-81
29F01	**Fairchild**	**29F01**	**★1028**
			844-82
		29F01C	**★1028**
			856-1
		29F01M	**★1028**
			856-2
29F10	**Fairchild**	**29F10C**	**★1028**
			1462-100
		29F10M	**★1028**
			1462-101
29F516	**Fairchild**	**29F516**	**★1026**
29F52	**Fairchild**	**29F52C**	**★1024**
			★5310
			1449-78
		29F52M	**★1024**
			★5310
			1449-79
29F53	**Fairchild**	**29F53C**	**★1024**
			★5310
			1449-80
		29F53M	**★1024**
			★5310
			1449-81
29F68	**Fairchild**	**29F68**	**★1027**
29HCT02			
	MicroTech	29HCT02	1448-117
29HCT11			
	MicroTech	29HCT11	1448-149
29HCT21			
	MicroTech	29HCT21	1449-72
29HCT22			
	MicroTech	29HCT22	1449-90
29HCT26			
	MicroTech	29HCT26	1449-44
29HCT29			
	MicroTech	29HCT29	1449-45
29HCT705			
	MicroTech	29HCT705	1449-38
29HCT707			
	MicroTech	29HCT707	1449-39
29L509	AMD	AM29L509	855-165
			1449-10
29L510	AMD	AM29L510	855-166
			1449-12
29L516	AMD	AM29L516	843-62
			1449-16
29L517	AMD	AM29L517	843-63
			1449-17
29LS18	AMD	AM29LS18	864-312
29V864	Raytheon	29V864	3813-15
		29V864A	3813-13
29VP864			
	Raytheon	**29VP864**	**★4137**
			3821-68
29VS864			
	Raytheon	**29VS864**	**★4137**
			3821-69
29VX000			
	Raytheon	**29VX000**	**★4137**
2C02	Sharp	IR2C02	2877-73
2C07	Sharp	IR2C07	2874-140
2C08	Sharp	IR2C08	2895-84
2C09	Sharp	IR2C09	2895-85
2C12	Sharp	IR2C12	2874-33
2C17	Sharp	IR2C17	3309-79
2C19	Sharp	IR2C19	3309-80

Base Number	Source	Device	Page-Line
2C22	Sharp	IR2C22	3309-84
2C30	Sharp	IR2C30	3309-81
2C32	Sharp	IR2C32	3309-82
2C33	Sharp	IR2C33	3309-83
2E01	Sharp	IR2E01	2874-127
2E02	Sharp	IR2E02	2874-135
2E03	Sharp	IR2E03	2875-13
2E04	Sharp	IR2E04	2875-14
2E05	Sharp	IR2E05	2875-4
2E07	Sharp	IR2E07	2875-5
2E09	Sharp	IR2E09	2877-4
2E10	Sharp	IR2E10	2875-6
2E11	Sharp	IR2E11	2876-43
2E12	Sharp	IR2E12	2877-81
2E13	Sharp	IR2E13	2874-128
2E14	Sharp	IR2E14	2877-19
2E15	Sharp	IR2E15	2875-15
2E16	Sharp	IR2E16	2875-7
2E17	Sharp	IR2E17	2875-8
2E19	Sharp	IR2E19	2874-136
2E20	Sharp	IR2E20	2877-82
2E21	Sharp	IR2E21	2874-129
2E22	Sharp	IR2E22	2874-137
2E24	Sharp	IR2E24	2874-130
2E25	Sharp	IR2E25	2874-131
2E27	Sharp	IR2E27	2876-108
2E28	Sharp	IR2E28	2877-5
2E29	Sharp	IR2E29	2874-138
2E30	Sharp	IR2E30	2875-9
2E31	Sharp	IR2E31	2874-132
		IR2E31A	2874-133
2E32	Sharp	IR2E32N	2874-134
2E33	Sharp	IR2E33	2875-10
2E34	Sharp	IR2E34	2877-20
2E35	Sharp	IR2E35	2877-6
2E36	Sharp	IR2E36	2875-11
2E37	Sharp	IR2E37	2874-139
2E38	Sharp	IR2E38	2875-12
2G5	Elxsi	Parallel	
		SPICE 2G5	4948-3
20V12	Lambda	L20V12	3401-30
20V15	Lambda	L20V15	3401-31
20V18	Lambda	L20V18	3401-32
20V20	Lambda	L20V20	3401-33
20V24	Lambda	L20V24	3401-34
20V5	Lambda	L20V5	3401-35
20V6	Lambda	L20V6	3401-36
20V9	Lambda	L20V9	3401-37
2PC256	TI	TMX2PC256-4	3824-79
2S20	AD	2S20	3403-92
		MSC2S20	3403-93
2V56	**Dense-Pac**	**DPD2V56**	**★4008**
			3828-15
2X04	Datel	RP2X04	2896-42
	Panatech	**RP2X04**	**★4133**
3	Comark	Disktor M-3	1811-14
	Datel	**ADC-HU3**	**★3161**
	DYSYS	BRICK-3	2011-32
	Ferranti	ZNPCM3	3377-76
	Force	CPU-3	2027-15
		DRAM-E3	2045-21
	Genrad	HILO-3	4958-2
			5050-85
	GouldAMI	UA-3	4446-11
	Intelicom	STD-SX3-A	2039-57
		STD-WW3-A	2042-45
	Interdesign	ULA3G	4463-2
		ULA3RA	4442-33
		ULA3RB	4442-34
		ULA3RC	4442-35
		ULA3RD	4442-36
		ULA3U	4463-6
	IXYS	XVS-3	3306-23
	Matrix	RLK3	1817-10
	MetaSoft	**Suprem 3**	**★5112**
	Micro-Rel	D3 Library	4480-18
	Mostek	MDX-CPU3	2021-6
	Octagon	SYS-3A	2023-10
	PCAD	PCB-3	4928-3
			4986-3
	Sharp	SM3A	1450-69
			1411-29
	Siliconix	ISO-3	
		Library	4481-27
	Supertex	SD3A	3328-22
	Tektronix	**QuickChip 3**	**★4756**
			(Continued)

Arranged alphanumerically from left to right.

PART NUMBER INDEX

Base Number	Source	Device	Page-Line
3	Tektronix	QuickChip 3	844-107
	TLSI	TA-3	4456-24
	Torric	UA3	4456-38
	Universal	IS03	¶ 444-10
	VersaLogic	IPI-3	2041-14
	VLSIDesign	MULTI-CELL3	4482-16
	WinSystems	LPM-CPU3-2	2015-20
		MCM-SBC3	2017-17
30	Interdesign	ULA30ARA	4444-14
		ULA30ARB	4444-15
		ULA30ARC	4444-18
		ULA30ARD	4444-19
		ULA30DS	4444-13
		ULA30RA	4444-16
		ULA30RB	4444-17
		ULA30RC	4444-20
		ULA30RD	4444-21
	OKI	**OCS30**	**★4733**
	TeledyneC	CAG30	2822-30
	Telesis	EDA-30	
		Personal	
		W/S	4925-1
	Ziatech	zSBX 30	2037-3
300	Altera	EP300	4473-57
			¶ 445-7
			¶ 445-11
			¶ 445-14
		EP300-1	4473-55
		EP300-2	4473-56
	ArrayTech	DHS300	4439-17
		HCD300	4439-18
	Comlinear	CLC300A	3357-41
	Cybernetic	CY300	2876-109
			1466-74
	Dionics	DI300	2877-58
	Exar	**XR300**	**★4618**
			4442-7
	Harris	HI-300	¶ 401-10
		HI-300	
		series	¶ 401-8
		HI300	2822-41
	Intel	iSBC300	2032-22
	ITT	SAJ300	3320-89
	LSIComp	**RED300/360**	**★1099**
			834-104
			891-56
	Mitchell	MIE-300	2015-22
		MIE-300A	2017-6
	Motorola	HDS300	1819-2
		MVME300	**★2110**
			2043-44
	National	FOE300B	¶ 410-12
	NCM	NCM300XZ	4452-12
			4452-13
			4452-15
		NMC300XZ	4452-14
	OEI	AC300	3401-61
	Siliconix	DG300	¶ 402-3
		DG300AA	**★3223**
			2822-44
		DG300AB	**★3223**
			2822-45
		DG300AC	**★3223**
			2822-46
3000	CalDevices	CDI3000	4440-18
	Cherry	CS3000F	4462-16
		CS3000X	4462-13
	CompVision	ElectroCADDS/3000	
			4981-3
			5046-43
		Full	
		Custom/3000	4912-2
		Logic	
		Design/3000	4912-3
	Fujitsu	**C3000**	**★4624**
		ET3000	**★4625**
	Galil	MCC-3000	3400-103
	GouldAMI	**GA3000D**	**★4632**
			4446-19
		GB3000D	**★4632**
			4446-20
	Honeywell	HM3000/RAM	4447-17
	LSIComp	**RED3000/3600**	**★1099**
			834-105
			891-59
	MicroNet	**MN3000**	**★3204**
			(Continued)
3000	MicroNet	MN3000	2853-47
		MN3000H	**★3204**
			2853-48
	Mostek	GB3000D	4451-23
		MKGA3000D	**★4715**
			4451-22
		MKGB3000D	**★4716**
			4451-24
	Motorola	MC3000	871-19
	National	TP3000	¶ 411-13
			¶ 411-18
	ProtoCAD	CAD Magic	
		3000	5035-1
	RCA	CA3000	3306-55
	Telesis	EDA-3000	4981-2
			5065-79
	TLSI	TA-3000D	4456-34
	Torric	GA3000D	4456-44
3000AVB1			
	Fujitsu	C3000AVB1	4444-40
3000AVB11			
	Fujitsu	C3000AVB11	4444-41
3000C2	Vatic	M3000C2	4458-2
3001	Intel	M3001	887-46
	MicroNet	MN3001	2853-49
		MN3001H	2853-50
	Motorola	MC3001	869-104
	National	TP3001	¶ 411-13
	Panasonic	MN3001	3319-77
			3398-46
	RCA	CA3001	3308-11
	Signetics	N3001	887-51
			¶ 376-14
			¶ 377-4
			1448-38
			1405-2
		S3001	887-53
			1448-39
	Siliconix	VQ3001	2898-77
	Supertex	VQ3001	2898-83
30015	**Exar**	**30015**	**★4618**
			4442-2
3002	Intel	3002	856-11
	MicroNet	MN3002	2853-51
		MN3002H	2853-52
	Motorola	MC3002	865-66
	Panasonic	MN3002	3398-58
	RCA	CA3002	3321-133
	Siemens	SDA3002	3325-83
	Signetics	N3002	856-14
			¶ 375-18
			¶ 376-14
			¶ 377-4
			1448-36
			1405-3
		S3002	856-15
			1448-37
	Siliconix	**SI3002**	**★3223**
3003	**MicroNet**	**MN3003**	**★3204**
			2857-35
		MN3003H	**★3204**
			2857-36
	Motorola	MC3003	873-50
	Panasonic	MN3003	3398-48
30030	**Exar**	**30030**	**★4618**
			4442-6
3004	Hughes	HNVM3004	3811-102
	MicroNet	MN3004	2857-37
		MN3004H	2857-38
	Panasonic	MN3004	3398-59
	Signetics	**SAA3004**	**★3698**
			★3728
			3323-8
30045	**Exar**	**30045**	**★4618**
			4442-9
3005	MicroNet	MN3005	2857-39
		MN3005H	2857-40
	Panasonic	MN3005	3398-57
	RCA	CA3005	3321-134
			3323-13
			¶ 415-10
3006	MicroNet	MN3006	2853-53
		MN3006H	2853-54
	Panasonic	MN3006	3398-52
	RCA	CA3006	3321-135
			3323-14
			(Continued)
3006	**Signetics**	**SAA3006**	**★3699**
			★3728
			3323-24
3007	MicroNet	MN3007	2857-41
		MN3007H	2857-42
	Panasonic	MN3007	3398-49
3008	Hughes	HNVM3008	3812-2
	ILSI	**CB-3008**	**★4664**
			4448-1
	LMS	C3008	1469-150
	MicroNet	**MN3008**	**★3204**
			2853-19
		MN3008H	**★3204**
			2853-20
	Panasonic	MN3008	3398-53
	RIFA	PBA3008	3383-1
30080	**Exar**	**30080**	**★4618**
			4442-11
3009	MicroNet	MN3009	2853-21
		MN3009H	2853-22
	Panasonic	MN3009	3398-54
	RIFA	PBA3009	3383-2
301	AD	AD301A	3356-19
		AD301AL	3343-11
	Fairchild	μA301AC	3356-20
	Harris	HI301	2824-140
	Intel	iSBC301	2032-17
	LinearTech	LM301A	3356-21
	MicroPwr	**MP301**	**★3605**
			3309-110
	Motorola	**LM301A**	**★3615**
			3356-22
	National	LM301A	3356-23
	NEC	μPC301A	3356-24
	Raytheon	LM301A	3353-29
	RCA	**CA301A**	**★3672**
			3356-25
		GP301AD	1449-123
	SGS	LM301A	3356-12
	SiliconG	SG301A	3356-26
	Siliconix	DG301	¶ 402-3
		DG301AA	**★3223**
			2824-143
		DG301AB	**★3223**
			2824-144
		DG301AC	**★3223**
			2824-145
	TeledyneC	CSR301	2874-61
			2896-98
	TeledyneS	301A/C	852-38
		301B/M	852-39
	ThomsonCSF	LM301A	3356-27
3010	CTI	MA3010	4441-29
	Intech	3010	3398-39
	Panasonic	MN3010	3319-78
			3398-47
	RCA	**CA3010**	**★3672**
			3354-28
		CA3010A	**★3672**
			3346-136
	Sharp	LI3010	1451-73
3011	National	LM3011	3322-5
	Panasonic	MN3011	3398-55
	RCA	CA3011	3308-12
			¶ 415-10
3012	Panasonic	MN3012	3398-56
	RCA	CA3012	3321-136
			¶ 415-10
3013	CTI	MA3013	4441-31
	MicroNet	**MN3013**	**★3204**
			2853-55
		MN3013H	**★3204**
			2853-56
	RCA	CA3013	3322-14
			¶ 415-10
	Signetics	**SAB3013**	**★3725**
			★3731
			★3733
			3325-65
	Sprague	UGN-3013	3399-116
		UGN-3013T	891-79
3014	MicroNet	MN3014	2853-32
		MN3014H	2853-33
	RCA	CA3014	3322-15
			¶ 415-10
3015	**RCA**	**CA3015**	**★3672**
			3334-215
			3354-40
		CA3015A	**★3672**
			3334-216
			3346-139
30155	**Exar**	**30155**	**★4618**
			4442-12
3016	CTI	MA3016	4441-34
3017	**ILSI**	**CB-3017**	**★4664**
			4448-5
3018	**RCA**	**CA3018**	**★3678**
			3309-1
			¶ 410-5
		CA3018A	**★3678**
			3309-2
3019	**RCA**	**CA3019**	**★3678**
			3311-42
			¶ 410-6
	Signetics	**SAF3019**	**★3728**
			★3733
			3320-99
	Sprague	UGN-3019	891-80
			3399-117
		UGS-3019	891-88
			3399-124
302	Dionics	DI302	2877-59
	Harris	HI302	2826-108
		HS302RH	**★ 674**
			2827-103
	Intel	iSBC302	2032-20
	MicroPwr	**MP302**	**★3207**
			★3605
			3309-111
		MP302DIA	**★3207**
			★3605
			2826-111
		MP302DIC	**★3207**
			★3605
			2826-112
	National	LM302	3329-40
	RCA	GP302AD	1449-124
	Siliconix	DG302	¶ 402-3
		DG302AA	**★3223**
			2826-113
		DG302AB	**★3223**
			2826-114
		DG302AC	**★3223**
			2826-115
	TeledyneS	302A/C	852-33
		302B/M	852-34
3020	Goldstar	LL3020	4445-31
	HybridSys	HS3020B	2853-34
		HS3020C	2853-35
	HyComp	HC3020	3306-82
			3343-26
	Intech	3020	3398-40
	LSILogic	**LL3020**	**★4676**
			4449-38
	MicroNet	**MN3020**	**★3204**
			2853-36
		MN3020H	**★3204**
			2853-37
	National	TP3020	3377-147
	RCA	CA3020	3318-43
		CA3020A	3308-13
	Sprague	UGN-3020T	891-81
		UGS-3020	891-89
3021	Motorola	MC3021	874-59
	National	TP3021	3377-49
3022	Motorola	MC3022	874-152
3023	**ILSI**	**CB-3023**	**★4664**
			4448-9
3024	CTI	MA3024	4441-36
3025	Motorola	MC3025	870-53
3026	Motorola	MC3026	868-174
	RCA	**CA3026**	**★3678**
			3309-93
3027	Signetics	SAA3027	3323-9
3028	RCA	CA3028	3321-137
		CA3028A	3306-50
			¶ 409-11
		CA3028B	3306-51
			¶ 409-11
	Signetics	**SAA3028**	**★3728**
			(Continued)

¶ Indicates page number in Application Note Directory.
★ Indicates additional data is provided on the page noted.

Base Number	Source	Device	Page-Line
3028	**Signetics**	**SAA3028**	★**3733**
			3323-10
3029	**RCA**	**CA3029**	★**3672**
			3354-29
		CA3029A	★**3672**
			3346-137
303	Harris	HI303	2825-70
		HS303RH	★ **674**
			2827-109
	MicroPwr	**MP303**	★**3207**
			★**3605**
			3309-112
		MP303DIA	★**3207**
			★**3605**
			2825-73
		MP303DIC	★**3207**
			★**3605**
			2825-74
	Siliconix	DG303	¶ 402-3
		DG303AA	★**3223**
			2825-75
		DG303AB	★**3223**
			2825-76
		DG303AC	★**3223**
			2825-77
	TeledyneS	303A/C	852-63
		303B/M	852-64
3030	Goldstar	LL3030	4445-32
	Intech	3030	3398-38
	LSILogic	**LL3030**	★**4676**
			4449-39
	RCA	**CA3030**	★**3672**
			3334-217
			3354-41
		CA3030A	★**3672**
			3334-218
			3346-140
	Sprague	UGN-3030	891-82
			3399-118
		UGS-3030	891-90
			3399-125
30300	**Exar**	**30300**	★**4618**
			4442-13
3031	Intech	MOC3031	¶ 397-11
	iLSi	CB-3031	4448-12
		CB3031	★**4664**
	Motorola	MOC3031	¶ 424-5
3034	Telefunken	U3034	3323-67
		U3034M	¶ 420-4
3035	**Signetics**	**SAB3035**	★**3731**
			★**3733**
			3325-72
			3325-98
3036	**Signetics**	**SAB3036**	★**3731**
			★**3733**
			3325-73
	Telefunken	U3036	3323-68
		U3036M	¶ 420-4
3037	**RCA**	**CA3037**	★**3672**
			3354-30
		CA3037A	★**3672**
			3346-138
	Signetics	**SAB3037**	★**3731**
			★**3733**
			3325-74
	Telefunken	U3037	3323-69
		U3037M	¶ 420-4
3038	CTI	MA3038	4441-38
	RCA	**CA3038**	★**3672**
			3334-219
			3354-42
		CA3038A	★**3672**
			3334-220
			3346-141
	Telefunken	U3038	3323-70
		U3038M	¶ 420-4
3039	**RCA**	**CA3039**	★**3678**
304	CharlesRiver	TP-304	2043-12
	Harris	HI304	2822-42
	Intel	iSBC304	2032-27
	National	LM304	3394-54
	SiliconG	SG304	3394-55
			3395-9
	Siliconix	DG304	¶ 402-3
		DG304AA	★**3223**
			2822-47
			(Continued)
304	**Siliconix**	**DG304AB**	★**3223**
			2822-48
		DG304AC	★**3223**
			2822-49
	TeledyneS	304A/C	852-76
		304B/M	852-77
	ThomsonCSF	LM304	3394-56
3040	Goldstar	LL3040	4445-33
	Intech	3040	3405-53
	LSILogic	**LL3040**	★**4676**
			4449-40
	MicroNet	**MN3040**	★**3204**
			2857-23
		MN3040H	★**3204**
			2857-24
	National	TP3040	3379-72
		TP3040A	3379-73
	RCA	CA3040	3308-14
	Sprague	UGN-3040T	891-83
			3399-119
	Telefunken	U3040	2880-8
			3325-81
		U3040M	¶ 381-5
3041	Intech	3041	3405-52
		MOC3041	¶ 397-11
	iLSi	CB-3041	4448-14
		CB3041	★**4664**
	Motorola	MOC3041	¶ 424-5
3042	Intel	iSBC3042	2032-26
	Sanyo	STK3042	3316-187
	Telefunken	U3042	3323-93
		U3042M	¶ 381-5
3043	Telefunken	U3043	3323-71
		U3043M	3306-8
			¶ 420-4
3044	Aptek	AMS3044	3377-12
		ITT3044	¶ 428-5
3045	Aptek	AMS3045	3377-13
		ITT3045	¶ 428-5
	National	LM3045	3309-12
	Plessey	SL3045	3309-16
	RCA	**CA3045**	★**3678**
			3309-19
	SGS	LM3045	3309-25
	SiliconG	SG3045	3309-32
3046	National	LM3046	3309-13
	Plessey	SL3046	3309-17
	RCA	**CA3046**	★**3678**
			3309-20
	SGS	CA3046	3309-24
		LM3046	3309-26
	SiliconG	SG3046	3309-33
3047	**Signetics**	**TDA3047**	★**3700**
			★**3728**
			3307-80
			3322-167
			3323-2
3048	**RCA**	**CA3048**	★**3678**
			3306-1
			¶ 405-14
	Signetics	**TDA3048**	★**3700**
			★**3728**
			3323-3
3049	**RCA**	**CA3049**	★**3678**
			3309-96
			3323-15
304D2	**FujitsuA**	**FBC304D2A**	★**2106**
			★**2107**
			2046-24
304M1	**FujitsuA**	**FBC304M1A**	★**2106**
			2046-23
305	Barvon	BC305	4439-29
	Fairchild	µA305AC	3394-17
		µA305C	3393-1
	Harris	HI305	2824-141
	Intersil	LM305	3393-2
	National	LM305	3393-3
		LM305A	3394-18
	NEC	µPC305	3393-4
	Siemens	TCA305	3328-30
	SiliconG	SG305	3393-5
		SG305A	3394-19
	Siliconix	DG305	¶ 402-3
		DG305AA	★**3223**
			2824-146
		DG305AB	★**3223**
			(Continued)
305	Siliconix	DG305AB	2824-147
		DG305AC	★**3223**
			2824-148
	ThomsonCSF	LM305	3394-20
3050	Intech	3050	3398-2
	RCA	**CA3050**	★**3678**
			3309-98
3051	**iLSi**	**CB-3051**	★**4664**
			4448-16
	National	TP3051	3377-83
	RCA	**CA3051**	★**3678**
			3309-99
3052	National	TP3052	3377-105
	RCA	**CA3052**	★**3678**
			3306-2
3053	National	TP3053	3377-106
	RCA	CA3053	3306-52
3054	**Fairchild**	**µA3054**	★**3575**
			3377-115
	Motorola	**CA3054**	★**3614**
			3309-92
	National	TP3054	3377-113
	RCA	**CA3054**	★**3678**
			3309-94
3056	National	TP3056	3377-84
3057	**Fairchild**	**µA3057**	★**3575**
			3377-78
	National	TP3057	3377-75
3058	RCA	CA3058	3405-133
			¶ 402-8
3059	Motorola	CA3059	3405-128
	RCA	CA3059	3405-134
			¶ 402-8
306	Harris	HI306	2826-109
		HS306RH	★ **674**
			2827-104
	National	LM306	3313-4
	Siliconix	DG306	¶ 402-3
		DG306AA	★**3223**
			2826-116
		DG306AB	★**3223**
			2827-1
		DG306AC	★**3223**
			2827-2
	TeledyneS	306A/C	852-85
3060	Goldstar	LL3060	4445-34
	LSILogic	**LL3060**	★**4676**
			4449-42
	Motorola	MC3060	864-232
	RCA	**CA3060**	★**3672**
			3334-51
			3369-10
		CA3060A	★**3672**
			3334-58
		CA3060B	★**3672**
			3334-59
	Telefunken	U3060M	3375-65
			¶ 381-5
3061	Motorola	MC3061	867-171
3062	Motorola	MC3062	867-172
	Sanyo	STK3062	3316-188
3063	iLSi	CB-3063	4448-19
		CB3063	★**4664**
3064	Aptek	AMS3064	3379-56
	National	LM3064	3324-53
		TP3064	3377-135
3065	Aptek	AMS3065	3379-57
	RCA	CA3065	3322-16
			3326-49
3067	National	TP3067	3377-81
3068	CTI	MA3068	4441-40
	RCA	CA3068	3327-38
			¶ 417-2
3069	Hughes	HNMV3069	3811-44
	Intech	A3069	3399-63
307	Harris	HI307	2825-71
		HS307RH	★ **674**
			2827-110
	iLSi	**CB-307**	★**4664**
			4448-22
	Intel	iSBC307	2032-28
	LinearTech	LM307	3356-13
	Motorola	**LM307**	★**3616**
			3356-14
	National	LM307	3356-15
	RCA	**CA307**	★**3672**
			(Continued)
307	RCA	CA307	3356-16
	SiliconG	SG307	3356-17
	Siliconix	DG307	¶ 402-3
		DG307AA	★**3223**
			2825-78
		DG307AB	★**3223**
			2825-79
		DG307AC	★**3223**
			2825-80
	TeledyneS	307A/C	852-86
	ThomsonCSF	LM307	3356-18
3070	RCA	CA3070	3324-149
	Telefunken	U3070	3326-12
			3811-17
		U3070M	¶ 381-5
3071	RCA	CA3071	3324-150
3072	RCA	CA3072	3324-151
3075	National	LM3075	3322-6
	RCA	CA3075	3322-17
			3326-50
	Sprague	UGN-3075	2895-52
		UGS-3075	2895-54
3076	Sprague	UGN-3076	2895-53
		UGS-3076	2895-55
3077	**CTI**	**CT3077**	★ **601**
			2901-42
3078	**CTI**	**CT3078**	★ **601**
			2901-43
	Raytheon	**RC3078**	★**3666**
			3350-54
		RC3078A	★**3666**
			3350-6
	RCA	**CA3078**	★**3672**
			3347-18
			3334-33
			3350-55
		CA3078A	★**3672**
			3347-25
			3334-48
3079	Motorola	CA3079	3405-129
	RCA	CA3079	3405-135
			¶ 402-8
308	AD	AD308	3356-4
		AD308A	3342-51
	CharlesRiver	TP-308	2043-13
	Fairchild	µA308AC	3342-52
	Harris	LM308	3356-5
		LM308A	3342-53
	Intech	DG308	¶ 402-17
	Intersil	**LM308**	★**3600**
			★**3601**
			3356-6
		LM308A	★**3600**
			★**3601**
			3342-54
		LM308LN	★**3600**
			★**3601**
			3356-2
	LinearTech	LM308	3356-7
		LM308A	3342-55
	MicroPwr	**MP308**	★**3607**
			3356-8
		MP308A	★**3607**
			3342-56
	Motorola	**LM308**	★**3615**
			3356-9
		LM308A	★**3615**
			3342-57
	National	LM308	3356-10
		LM308A	3343-1
	Siliconix	DG308	¶ 403-1
			¶ 403-2
		DG308AA	★**3223**
			2823-85
		DG308AC	★**3223**
			2823-86
	ThomsonCSF	LM308	3356-11
		LM308A	3343-2
3080	Goldstar	LL3080	4445-35
	LSILogic	**LL3080**	★**4676**
			4449-44
	National	LM3080	3319-8
		LM3080A	3319-9
	RCA	**CA3080**	★**3674**
			3318-203
			3341-4
			(Continued)

Arranged alphanumerically from left to right.

PART NUMBER INDEX

Base Number	Source	Device	Page-Line
3080	RCA	CA3080	3351-4
		CA3080A	★ **3674**
			3318-204
			3341-5
			3351-5
			¶ 405-12
3081	Aptek	AMS3081	3381-56
	RCA	**CA3081**	★ **3678**
			3310-167
3082	Aptek	AMS3082	3381-57
	RCA	**CA3082**	★ **3678**
			3310-164
	Sanyo	STK3082	3316-189
	Telefunken	U3082	2875-17
		U3082M	¶ 381-5
3083	**RCA**	**CA3083**	★ **3678**
			3310-58
	Signetics	TDA3083	3310-60
	SiliconG	SG3083	3310-61
	Telefunken	U3083	3322-153
		U3083M	3306-9
3084	**RCA**	**CA3084**	★ **3678**
3085	RCA	CA3085	3392-104
			¶ 427-1
		CA3085A	3393-63
		CA3085B	3394-21
3086	National	LM3086	3309-14
	RCA	**CA3086**	★ **3678**
			3309-21
	SiliconG	SG3086	3309-34
3088	RCA	CA3088	3321-32
3089	National	LM3089	3322-7
	RCA	CA3089	3322-18
			¶ 415-2
	SGS	TCA3089	3322-27
	Signetics	**CA3089**	★ **3723**
			★ **3727**
			3322-33
3089D2	Signetics	CA3089D2	3322-34
308C1	FujitsuA	FBC308C1A	2046-32
309	Fairchild	μA309C	3384-58
	IPS	IP309	3384-93
		IP309A	3384-94
	Motorola	**LM309H**	★ **3622**
			3384-20
		LM309K	★ **3622**
			3384-61
	National	LM309H	3384-24
		LM309K	3384-64
	SiliconG	SG309K	3384-72
		SG309T	3384-28
	Siliconix	**DG309A**	★ **3223**
			2823-87
		DG309C	★ **3223**
			2823-88
3090	RCA	CA3090	¶ 405-12
		CA3090AQ	¶ 415-11
3091	RCA	CA3091	3400-136
3094	**RCA**	**CA3094**	★ **3674**
			★ **3677**
			3318-30
			3348-92
			3330-108
			3347-9
			3334-21
			3334-75
			¶ 405-6
			¶ 424-13
		CA3094A	★ **3674**
			★ **3677**
			3347-10
			3334-22
			3334-80
			3354-7
		CA3094B	★ **3674**
			★ **3677**
			3347-11
			3334-23
			3334-82
			3354-8
3096	**RCA**	**CA3096**	★ **3678**
			3310-31
		CA3096A	★ **3678**
			3310-32
		CA3096C	★ **3678**
			3310-33
3097	**RCA**	**CA3097**	★ **3678**
			3311-46
3099	RCA	CA3099	891-114
			3398-101
30L90	Raytheon	CGA30L90	4454-6
30T00	**Signetics**	**ACE30T00**	★ **4747**
			4455-21
31	AllenSys	FX-31	2015-4
	Burr-Brown	**UAF31**	★ **3152**
			3398-17
	FujitsuA	**FBM31CA**	★ **4016**
			2046-31
		FBM31DB	★ **4016**
			3826-8
	NCR	ADP-31A	2031-22
	OKI	**OCS31**	★ **4733**
	Zilog	Model 31	1823-3
310	Barvon	BC310	4439-34
	HyComp	HCS310	2826-74
	Intel	86/310	¶ 381-4
		iSBCMEM/310	2032-12
	Intronics	C310	3398-110
	MicroInds	MIB310A	2036-16
	MicroPwr	**MP310**	★ **3605**
			3309-113
	Motorola	**MVME310**	★ **2110**
			2043-49
	National	COP310C	1450-130
		COP310L	1450-131
		LM310	3329-33
3100	CalDevices	HCS3100	4440-17
	Cherry	CS3100	4462-14
	ITT	UVC3100	844-109
	Motorola	MC3100	871-20
	Plessey	CLA3100	4453-36
	RCA	**CA3100**	★ **3674**
			3354-21
	Samsung	**KSV3100A**	★ **3220**
			2837-34
			2859-55
	SGS	L3100	3354-22
3101	AMD	AM3101	3831-94
		AM3101-1C	3831-43
		AM3101-1M	3831-63
		AM3101AC	3831-44
		AM3101AM	3831-64
	Aptek	AMS3101	3381-135
	Motorola	MC3101	869-105
	Panasonic	MN3101	3398-61
	Siemens	TLE3101	3401-67
	Signetics	**N3101A**	★ **4166**
			3831-50
		S3101A	3831-71
	TI	TCM3101	3379-113
			¶ 413-11
3102	Motorola	MC3102	865-67
	RCA	**CA3102**	★ **3678**
			3309-97
	Siemens	TLE3102	3401-68
3103	Aptek	AMS3103	3381-133
	Siemens	TLE3103	3401-69
3104	Aptek	AMS3104	3381-134
	Hughes	HNMV3104A	3811-92
	Siemens	TLE3104	3401-70
3105	RCA	CA3105	3353-5
		CA3105M	3353-6
	TI	TCM3105	3379-114
3108	Hughes	HNVM3108A	3812-3
311	AD	AD311	3313-13
	DataTrans	DTX311	2032-42
		DTX311EX	2032-48
	Fairchild	μA311C	3313-14
	Intersil	**IH311**	★ **3196**
	Intronics	C311	3398-111
	LinearTech	LM311	3313-11
		LT311A	3312-20
	MicroPwr	**MP311**	★ **3605**
			3309-114
	Motorola	**LM311**	★ **3631**
			3313-15
	National	CIM-311	2030-24
		COP311C	1450-132
		COP311L	1450-133
		LF311	3313-23
		LM311	3313-16
	NEC	μPC311	3313-17
			(Continued)
311	Raytheon	LM311	3313-18
	RCA	**CA311**	★ **3672**
			★ **3677**
			3313-19
	Samsung	**LM311**	★ **3679**
			3313-12
	Siemens	TCA311	3357-155
	Signetics	**LM311**	★ **3721**
			3313-20
	SiliconG	SG311	3313-21
	TeledyneS	311A/C	852-42
		311B/M	852-43
	ThomsonCSF	LM311	3313-22
3110	Goldstar	LL3110	4445-38
	LSILogic	**LL3110**	★ **4676**
			4450-1
	National	TP3110	3379-16
			¶ 413-17
	Sanyo	LA3110	3319-17
3112	Siemens	SDA3112	3325-84
3114	AMD	TMS3114	3857-37
3115	Sanyo	LA3115	3319-52
3118	**RCA**	**CA3118**	★ **3678**
			3309-3
		CA3118A	★ **3678**
			3309-4
312	Intel	iSBCMEM/312	2032-9
	Intersil	**IH312**	★ **3196**
	Intronics	C312	3398-112
	MicroPwr	**MP312**	★ **3605**
			3309-115
	National	LM312	3356-3
	PMI	**DAC-312B**	★ **3637**
			2868-22
		DAC-312E	★ **3637**
			2866-25
		DAC-312F	★ **3637**
			2868-23
	Siemens	TCA312	3357-96
	TeledyneS	312A/C	852-45
		312B/M	852-46
3120	HybridSys	DAC3120B-0	2868-43
		DAC3120C-0	2868-44
		HS3120B-2	2864-28
		HS3120C-2	2864-29
	National	TP3120	3379-17
			¶ 413-17
	RCA	CA3120	3326-20
		CA3120E	¶ 417-10
	Sanyo	LA3120	3319-18
3121	Motorola	MC3121	874-60
	RCA	CA3121	3324-152
3122	Motorola	MC3122	874-153
	Sanyo	LA3122	3319-53
3123	RCA	CA3123	3321-33
3125	RCA	CA3125	3324-153
3126	Motorola	MC3126	868-175
	National	LM3126	3324-137
	RCA	CA3126	3324-154
		CA3126Q	¶ 417-4
3127	Plessey	SL3127	3310-66
	RCA	**CA3127**	★ **3678**
			3310-67
			3322-104
3128	RCA	CA3128	3324-155
313	AD	LM313	¶ 427-14
	MicroPwr	**MP313**	★ **3605**
			3309-116
	National	LM313	3401-150
	TeledyneS	313A/C	852-47
		313B/M	852-48
3130	Goldstar	LL3130	4445-39
	LSILogic	**LL3130**	★ **4676**
			4450-2
	RCA	**CA3130**	★ **3674**
			3334-93
			3357-111
			¶ 408-11
		CA3130A	★ **3674**
			3334-94
			3351-10
			¶ 408-11
		CA3130B	¶ 408-11
	Sanyo	LA3130	3319-19
3133	Sanyo	LA3133	3319-54
3134	RCA	CA3134	3326-51
			¶ 414-7
3136	RCA	CA3136	3327-39
3138	**RCA**	**CA3138**	★ **3678**
			3310-49
		CA3138A	★ **3678**
			3310-50
3139	RCA	CA3139	3324-54
	TRW-LSI	TMC3139	3809-124
3140	HybridSys	HS3140B-3	2870-54
		HS3140B-4	2870-29
		HS3140C-3	2870-55
		HS3140C-4	2870-30
	MicroPwr	**MP3140B-3**	★ **3206**
			2871-11
		MP3140B-4	★ **3206**
			2870-52
		MP3140C-3	★ **3206**
			2871-12
		MP3140C-4	★ **3206**
			2870-53
	RCA	**CA3140**	★ **3674**
			★ **3676**
			3330-35
			3334-79
			3357-110
		CA3140A	★ **3674**
			★ **3676**
			3351-12
3141	**RCA**	**CA3141**	★ **3678**
			3311-44
3142	RCA	CA3142	3326-21
		CA3142E	¶ 417-10
3143	RCA	CA3143	3324-156
			¶ 417-1
			¶ 417-5
3144	RCA	CA3144	¶ 417-1
			¶ 417-5
3145	Plessey	SL3145	3309-18
3146	National	LM3146	3309-15
	RCA	**CA3146**	★ **3678**
			3309-22
		CA3146A	★ **3678**
			3309-23
315	Barvon	BC315	4440-2
	Motorola	**MVME315**	★ **2110**
			2043-43
	Siemens	TCA315	3357-156
3150	Sanyo	LA3150	3319-20
3151	RCA	CA3151	3324-157
3154	RCA	CA3154	3326-22
			¶ 416-16
3155	Sanyo	LA3155	3319-55
3156	RCA	CA3156	3324-158
3157	RCA	CA3157	¶ 416-16
3159	RCA	CA3159	3325-127
316	**Motorola**	**MVME316**	★ **2111**
			2045-1
	National	LM316	3357-13
		LM316A	3349-1
			3346-171
3160	HybridSys	HS3160B-3	2873-11
		HS3160B-4	2872-10
		HS3160C-3	2873-12
		HS3160C-4	2872-11
	Intech	HS3160	¶ 388-4
	Motorola	MC3160	864-233
	RCA	**CA3160**	★ **3674**
			3330-36
			3357-109
		CA3160A	★ **3674**
			3351-9
	Sanyo	LA3160	3319-56
3161	Motorola	MC3161	867-173
	RCA	**CA3161**	★ **3219**
			2848-37
	Sanyo	LA3161	3319-57
3162	Motorola	MC3162	867-174
	RCA	**CA3162**	★ **3218**
			2848-38
3163	RCA	CA3163	891-32
			3376-83
3166	RCA	CA3166	3307-61
			3326-4
3168	**RCA**	**CA3168**	★ **3219**
			2876-11

¶ Indicates page number in Application Note Directory.
★ Indicates additional data is provided on the page noted.

Base Number	Source	Device	Page-Line
3169	RCA	CA3169	2895-75
		CA3169M	2895-76
317	Fairchild	μA317C	3393-78
	Goldstar	**GL317**	★**3580**
			3393-79
	IPS	**IP317**	★**3599**
			3393-84
		IP317A	★**3599**
			3393-85
		IP317AHV	★**3599**
			3394-37
		IP317HV	★**3599**
			3394-38
	Lambda	LLM317	3393-86
	LinearTech	LM317	3393-88
		LM317AHV	3394-40
		LM317HV	3394-30
		LT317A	3393-90
		LT317AHV	3394-32
	MCE	MCELM317	3393-93
	Motorola	**LM317**	★**3625**
			3393-96
		LM317L	★**3625**
			3393-70
		LM317M	★**3625**
			3394-2
	National	LM317	3393-99
		LM317L	3393-71
	NEC	μPC317	3392-111
	SGS	LM317	3393-102
	SiliconG	SG317	3393-75
			3393-107
		SG317A	3393-76
			3393-108
	ThomsonCSF	LM317	3393-110
	Unitrode	UC317	3393-113
3170	Goldstar	LL3170	4445-42
	LSILogic	LL3170	4450-8
	RCA	CA3170	3324-159
	Sanyo	LA3170	3319-21
3172	RCA	CA3172	3325-1
3179	RCA	CA3179	3375-78
			3376-84
318	Harris	LM318	3357-73
	LinearTech	LM318	3357-74
	MicroPwr	**MP318**	★**3605**
			3309-102
	National	LM318	3357-75
	NEC	μPC318	3357-72
	Telefunken	U318	3323-72
	ThomsonCSF	LM318	3357-76
3182	**Harris**	**HS3182**	★ **678**
			2883-59
			2900-9
3183	**RCA**	**CA3183**	★**3678**
			3310-59
	SiliconG	SG3183	3310-62
		SG3183A	3310-63
3189	National	LM3189	3322-8
	RCA	CA3189	3322-19
	SGS	TCA3189	3322-62
319	DEC	DC319-AA	1465-26
	LinearTech	LM319	3315-10
		LT319A	3313-34
	Motorola	**MVME319**	★**2110**
	National	LM319	3315-6
	NEC	μPC319	3315-7
	Signetics	**LM319**	★**3723**
			3315-8
	ThomsonCSF	LM319	3315-9
3190	**Motorola**	**TDA3190P**	★**3612**
			★**3613**
			3326-41
	SGS	TDA3190	3326-59
	Sprague	TDA3190	3326-70
3193	**RCA**	**CA3193**	★**3674**
			3343-14
		CA3193A	★**3674**
			3340-32
		CA3193B	★**3674**
			3338-53
3194	RCA	CA3194	3325-2
3195	RCA	CA3195	3322-119
3199	RCA	CA3199	849-84
			3375-79
31L01	AMD	AM31L01C	3831-116
		AM31L01M	3831-117
32	AD	ADVFG32	3405-65
	Burr-Brown	**MP32**	★**3148**
			1456-107
			1457-75
			1460-14
			1460-85
			1469-53
		VFC32	★**3148**
			★**3153**
			3405-67
			¶ 394-5
	Calma	GDS II/32	4903-3
	CharlesRiver	CP-32	2029-2
	Cromemco	32KBS	2038-38
	FujitsuA	**FBM32DA**	★**4016**
			3826-9
	GI	SPR-32	¶ 364-14
	Intelicom	CMOS-32K	2041-55
	Intergraph	Interpro 32	4919-1
	LogicDev	LSH32	843-123
	MCE	MCEVFC32	3405-103
	MicroPwr	MPVFC32B	3405-104
		MPVFC32K	3405-105
		MPVFC32S	3405-106
	MicronTech	IS32	3400-48
	NCR	ADP-32	2035-61
		NCR/32-010	1464-108
		NCR/32-020	1464-109
			1405-1
		NCR/32-500	1464-110
		NCR/32-580	1464-112
		NCR/32-590	1464-111
	Onset	ADC-32	2030-7
	PMI	**OP-32**	★**3636**
			★**3639**
			3347-27
			3334-76
		OP-32A	★**3636**
			★**3639**
			3340-75
		OP-32B	★**3636**
			★**3639**
			3343-3
		OP-32E	★**3636**
			★**3639**
			3340-72
		OP-32F	★**3636**
			★**3639**
			3343-4
		OP-32G	★**3636**
			★**3639**
			3344-54
	Reticon	BAC-32	¶ 431-1
		RL32WD	3400-36
320	Amperex	OM320	3325-144
	AnalogSys	MZ320	3329-41
	Barvon	BC320	4440-7
	Burr-Brown	**VFC320**	★**3148**
			3405-68
	Exar	XR320	3383-5
			¶ 423-2
			¶ 423-4
	IPS	**IP320-12**	★**3599**
			3391-43
		IP320-15	★**3599**
			3391-109
		IP320-5	★**3599**
			3390-36
		IP320A	★**3599**
			3390-37
		IP320A-12	★**3599**
			3391-44
		IP320A-15	★**3599**
			3391-110
	Intel	iSBCMEM/320	2032-16
	ITT	DF320	3378-76
	Motorola	**MVME320**	★**2110**
			2044-4
	National	COP320	1450-134
		COP320L	1450-135
		LM320	¶ 428-1
	SiliconG	SG320-05K	3390-53
		SG320-05P	3390-28
		SG320-05R	3390-54
			(Continued)
320	SiliconG	SG320-05T	3390-22
		SG320-08K	3390-117
		SG320-08P	3390-118
		SG320-08R	3390-119
		SG320-08T	3390-108
		SG320-12K	3391-58
		SG320-12P	3391-35
		SG320-12R	3391-59
		SG320-12T	3391-18
		SG320-15K	3391-124
		SG320-15P	3391-125
		SG320-15R	3391-101
		SG320-15T	3391-82
		SG320-18K	3392-22
		SG320-18P	3392-23
		SG320-18R	3392-24
		SG320-18T	3392-11
		SG320-5	3390-80
			3390-72
			3390-81
			3390-69
	TI	**TMS320**	★ **730**
			844-64
3200	Cherry	CS3200L	4462-15
	Fairchild	**FGC3200**	★**4622**
			4442-23
	National	3200	¶ 371-10
			¶ 373-6
	TRW-LSI	TMC3200	806-118
			842-50
			844-54
	VTI	**VGC3200**	★**4805**
			4458-12
32000	TI	TI32000 family	¶ 377-17
32008	DDC	MT32008	2901-5
			1469-117
	National	NS32008	1425-42
	TI	TI32008	1464-104
3201	Aptek	AMS3201	3382-1
	Goldstar	**GL3201**	★**3580**
			3326-32
	Ironics	IV-3201	2029-32
	RCA	CA3201	3325-3
	Sanyo	LA3201	3324-27
	Sprague	UGN-3201M	891-84
	TRW-LSI	TMC3201	837-74
			844-55
32010	GI	DSP32010	844-61
	TI	**SMJ32010**	★ **730**
			844-63
		TMS32010	844-65
32016	National	NS32016	1435-32
			¶ 378-14
	TI	TI32016	1464-105
3202	**Goldstar**	**GL3202**	★**3580**
			3326-89
	RCA	CA3202	3325-105
	Siemens	SDA3202	3325-89
32020	**TI**	**SMJ32020**	★ **730**
		TMS32020	844-66
3203	Sprague	UGN-3203M	891-85
32032	Fairchild	F32032	1464-87
	National	32032	¶ 378-15
		NS32032	1464-88
			1439-12
	TI	TI32032	1464-106
3204	Panasonic	MN3204	3319-79
			3398-50
3205	Siemens	SDA3205	3323-58
3206	Siemens	SDA3206	3323-59
3207	Intel	3207A	¶ 439-12
	Panasonic	MN3207	3319-80
			3398-51
	RCA	**CA3207**	★**3219**
			2874-31
	Signetics	3207A	2892-139
		3207A-1	2892-140
	ThomsonCSF	TDE3207	2894-34
3208	**RCA**	**CA3208**	★**3219**
			2874-30
32081	National	NS32081	1435-33
	TI	TI32081	1464-101
			¶ 381-18
32082	National	NS32082	1435-34
	TI	TI32082	1464-103
3209	RCA	CA3209	3322-20
320H12	National	LM320H12	3391-15
320H15	National	LM320H15	3391-79
320H5	National	LM320H5	3390-16
320K12	National	LM320K12	3391-28
320K15	National	LM320K15	3391-94
320K5	National	LM320K5	3390-46
320L05	National	LM320L05	3390-5
320L12	National	LM320L12	3391-9
320L15	National	LM320L15	3391-73
320ML05			
	National	LM320ML05	3390-10
320ML15			
	National	LM320ML15	3391-83
320MP12			
	National	LM320MP12	3391-24
320MP15			
	National	LM320MP15	3391-89
320MP5			
	National	LM320MP5	3390-17
320T12	National	LM320T12	3391-29
320T15	National	LM320T15	3391-95
320T5	National	LM320T5	3390-47
321	Amperex	OM321	3325-145
	AT&T	**WE321DS**	★**1603**
			1811-6
		WE321EB	★**1603**
			2029-30
		WE321SB-V100	
			★**1603**
			2029-31
	Fairchild	CCD321A	3405-21
			3854-7
	MicroInds	BLX321	2035-32
	National	COP321	1450-136
		COP321L	1450-137
		LM321	3307-89
		LM321A	3307-90
	Siemens	TCA321	3356-29
	TeledyneS	321A/C	852-65
		321B/M	852-66
	Telefunken	U321	3323-73
3210	**AD**	**ADSP-3210J**	★**1002**
			807-85
		ADSP-3210K	★**1002**
			807-86
		ADSP-3210S	★**1002**
			807-87
		ADSP-3210T	★**1002**
			807-88
	Aptek	AMS3210	3382-2
	Goldstar	LL3210	4445-43
	LSILogic	**LL3210**	★**4676**
			4450-9
	RCA	CA3210	3325-128
			¶ 417-8
	Sanyo	LA3210	3324-28
32100	**AT&T**	**WE32100**	★**1602**
			1465-2
			1439-8
32101	**AT&T**	**WE32101**	★**1602**
			1465-7
32102	**AT&T**	**WE32102**	★**1602**
			1465-3
32103	**AT&T**	**WE32103**	★**1602**
			1465-5
32104	**AT&T**	**WE32104**	★**1602**
			1465-4
32106	**AT&T**	**WE32106**	★**1603**
			843-6
			1465-6
3211	Emulogic	ECL3211	1813-7
	RCA	CA3211	849-91
3212	AMD	AM3212	1457-171
		M3212	1457-172
3215	RCA	CA3215	3322-21
3216	AMD	AM3216	1457-90
		M3216	1457-92
	National	DP3216	1457-100
	RCA	CA3216	3327-40
	Sanyo	LM3216	3320-142
3217	RCA	CA3217	3325-4
			¶ 417-13
3219	RCA	CA3219	2898-67
	RIFA	PBA3219	2896-28

Arranged alphanumerically from left to right.

Base Number	Source	Device	Page-Line
322	AMD	OM322	3325-143
	AnalogSys	MA322	3350-1
	National	LM322	3383-12
	Siemens	TCA322	3354-13
	TeledyneS	322A/C	852-57
		322B/M	852-58
3220	**AD**	**ADSP-3220J**	★**1003**
			806-151
			808-52
		ADSP-3220K	★**1003**
			806-152
			808-53
		ADSP-3220S	★**1003**
			806-153
			808-54
		ADSP-3220T	★**1003**
			806-154
			808-55
	Sprague	UGN-3220S	891-86
			3399-120
32201	TI	TI32201	1464-107
32202	TI	TI32202	1464-102
3221	Motorola	MC3221	3316-182
3222	Intel	3222	¶ 439-12
3223	RCA	CA3223	3325-106
3224	RCA	CA3224	3326-7
3226	AMD	AM3226	1457-91
		M3226	1457-93
	National	DP3226	1457-101
	RCA	CD3226	3327-98
3227	**RCA**	**CA3227**	★**3678**
			3310-68
3228	RCA	CA3228	2895-134
			3319-137
323	Amperex	OM323	3325-146
		OM323A	3325-147
	Fairchild	SH323	3385-8
		µA323	3385-11
	IPS	**IP323**	★**3599**
			3385-16
		IP323-12	★**3599**
			3387-81
		IP323-15	★**3599**
			3388-72
		IP323A	★**3599**
			3385-17
		IP323A-15	★**3599**
			3388-73
	LinearTech	LM323	3385-22
		LM323A	3385-23
	Motorola	**LM323**	★**3622**
			3385-28
		LM323A	★**3622**
			3385-29
	National	LM323	3385-38
		LM323A	3385-39
	Samsung	**LM323**	★**3679**
			3385-40
	SiliconG	SG323	3385-48
		SG323A	3385-49
	TeledyneS	323A/C	852-69
		323B/M	852-70
	ThomsonCSF	LM323	3385-52
3231	**CTI**	**CT3231**	★ **601**
			2901-44
3232	**CTI**	**CT3232**	★ **601**
			2901-45
	Motorola	MC3232A	2892-64
	RCA	CA3232	849-90
3235	RCA	CA3235	3327-41
3237	RCA	CA3237	3306-129
			3323-5
			3325-141
324	AnalogSys	MA324	3355-60
	Fairchild	µA324C	3334-145
	Goldstar	**GL324**	★**3580**
			3334-146
	Motorola	**LM324**	★**3618**
			3334-150
	National	COP324C	1450-109
		LM324	3334-153
		LM324A	3370-43
	NEC	µPC324	3334-154
	Raytheon	LM324	3334-157
	RCA	**CA324**	★**3672**
			3334-160
			(Continued)

Base Number	Source	Device	Page-Line
324	**Samsung**	**LM324**	★**3679**
			3370-40
		LM324A	★**3679**
			3335-6
	SGS	LM324	3373-1
		LM324A	3370-41
	Signetics	**LM324**	★**3721**
			3334-163
	SiliconG	SG324	3334-166
		SG324A	3370-44
	TeledyneS	324A/C	852-67
		324B/M	852-68
	ThomsonCSF	LM324	3373-3
		LM324A	3370-42
3240	**RCA**	**CA3240**	★**3674**
			★**3676**
			3334-137
		CA3240A	★**3674**
			★**3676**
			3365-1
3242	Motorola	MC3242	¶ 437-16
		MC3242A	2892-67
	RCA	CA3242	2896-79
3243	Siemens	SDA3243	3325-90
3245	Fairchild	3245	2893-8
	Intel	3245	¶ 439-12
	National	DS3245	2892-127
3246	**RCA**	**CA3246**	★**3678**
			3310-69
325	DY-4	DSTD-325	2042-31
	National	COP325C	1450-110
		LM325	3392-86
	Siemens	TCA325	3356-30
	TeledyneS	325A/C	852-72
		325B/M	852-73
3250	Goldstar	LL3250	4445-46
	LSILogic	**LL3250**	★**4676**
			4450-14
	RCA	CA3250	3309-44
3251	RCA	CA3251	3309-45
3252	RCA	CA3252	2896-49
3253	SiliconG	SG3253	3334-62
3254	RCA	CA3254	3326-100
326	National	LM326	3392-76
	TeledyneS	326A/C	852-74
		326B/M	852-75
3260	**RCA**	**CA3260**	★**3674**
			3330-37
		CA3260AE	★**3674**
			3363-104
		CA3260AT	★**3674**
			3363-105
		CA3260B	★**3674**
			3362-35
		CA3260E	★**3674**
			3368-32
		CA3260T	★**3674**
			3368-33
3262	Fairchild	3262A	3324-61
		3262B	3324-62
327	Telefunken	U327	3323-74
		U327M	¶ 381-5
			¶ 420-4
3271	Burr-Brown	3271/25	3337-34
	Siemens	SAB3271	3323-56
3273	Harris	HS3273	2900-56
3275	Ironics	IV-3275	2044-1
328	AnalogSys	MQ328	3308-32
	DataTrans	DTX328	2032-43
	DY-4	DSTD-328	2042-23
		SVME-328	2045-32
	Telefunken	U328M	¶ 381-5
			¶ 420-4
3280	**RCA**	**CA3280**	★**3674**
			3363-70
3282	**Harris**	**HS3282**	★ **680**
			2900-10
329	AnalogSys	MA-329	¶ 405-19
		MA329	3357-134
	LinearTech	LM329	3402-145
	National	LM329	3402-153
			¶ 404-14
	Raytheon	LM329	3402-157
3290	**MicroNet**	**MN3290**	★**3204**
			2872-34
	RCA	**CA3290**	★**3674**
			(Continued)

Base Number	Source	Device	Page-Line
3290	**RCA**	**CA3290**	★**3676**
			3315-18
		CA3290A	★**3674**
			★**3676**
			3315-13
		CA3290B	★**3674**
			★**3676**
			3314-46
3291	Burr-Brown	3291	3341-61
32C032	National	32C032	1465-9
		NS32C032	1464-89
32C10	GI	DSP32C10	844-62
32C132	National	NS32C132	1464-90
32C32	National	NS32C32	1464-91
32H8	**Dense-Pac**	**DPS32H8**	★**4008**
			3846-49
32R16	MMI	HAL32R16C	4476-35
		HAL32R16M	4476-36
		PAL32R16C	★ **691**
			★**4682**
			4475-3
		PAL32R16M	★ **691**
			★**4682**
			4475-4
32X8	**ICI**	**CMOS32X8-01**	★**3598**
			★**4031**
			3846-59
33	Samsung	KA33V	3317-7
330	Intel	86/330	¶ 381-4
	Motorola	**MVME330**	★**2110**
			2043-40
	National	LM330-5	3384-25
	RCA	CA330	¶ 387-15
3300	AMCC	Q3300C	4439-12
	Hughes	HNVM3300	3811-16
	Plessey	CLA3300	4453-38
	RCA	**CA3300**	★**3216**
			★**3218**
			843-154
			★**3216**
			★**3218**
			2832-35
		CA3300C	★**3216**
			★**3218**
			2832-37
	ThomsonCSF	CRN3300	3381-77
		TDA3300	3325-46
3301	**Motorola**	**MC3301**	★**3618**
			3334-186
		TDA3301	★**3612**
			3324-129
	National	LM3301	3334-187
	NEC	µPD3301	1456-115
			1457-129
			1457-307
	Raytheon	RC3301	3334-188
	Sanyo	LA3301	3322-123
3302	Fairchild	µA3302	3316-57
	Motorola	**MC3302**	★**3631**
			3316-53
	National	LM3302	3316-58
	SGS	MC3302	3316-54
	Signetics	**MC3302**	★**3721**
			3316-55
	ThomsonCSF	TDF3302	3316-56
3303	Fairchild	µA3303C	3334-170
	Motorola	**MC3303**	★**3618**
			3334-172
		MPQ3303	3310-40
		TDA3303	★**3612**
			3324-130
	Signetics	**MC3303**	★**3729**
			3373-8
33030	**Motorola**	**MC33030**	★**3619**
			2895-78
33031	**Motorola**	**MC33031**	★**3621**
			3401-55
3304	**RCA**	**CA3304**	★**3216**
			2832-5
3306	**RCA**	**CA3306**	★**3216**
			843-155
		CA3306C	★**3216**
			2832-36
33063	**IPS**	**IP33063**	★**3599**
			3395-129
			(Continued)

Base Number	Source	Device	Page-Line
33063	**Motorola**	**MC33063**	★**3626**
			3396-15
3307	**RCA**	**CA3307**	★**3216**
			2833-1
33071	Motorola	MC33071	3350-35
		MC33071A	3346-126
33072	Motorola	MC33072	3363-82
		MC33072A	3363-30
33074	**Motorola**	**MC33074**	★**3618**
			3334-177
			3371-1
		MC33074A	★**3618**
			3370-11
3308	RCA	CA3308	844-16
			2833-25
33084	Motorola	MC33084	3373-28
		MC33084A	3371-20
33085	Motorola	MC33085	3373-31
		MC33085A	3371-23
331	HybridSys	DAC331B-10	2857-20
		DAC331B-12	2864-33
		DAC331B-14	2870-32
		DAC331B-8	2853-26
		DAC331C-10	2857-21
		DAC331C-12	2864-34
		DAC331C-14	2870-33
		DAC331C-8	2853-27
	Intel	iSBX331	2033-4
	Motorola	**MVME331**	★**2111**
			2045-3
	National	LM331	3405-111
		LM331A	3405-112
			¶ 404-14
	SGS	TBA331	3309-27
	Siemens	TCA331	3357-157
	Siliconix	DF331A	3377-159
	TeledyneS	331A/C	852-89
		331B/M	852-90
3310	**RCA**	**CA3310**	★**3216**
			2839-3
		CA3310A	★**3216**
			2838-32
	SGS	TDA3310	3310-76
	Signetics	**PCD3310**	★**3728**
	Sprague	ULN-3310	3400-90
		ULN-3310Y	¶ 423-15
3311	**Signetics**	**PCD3311**	★**3705**
			★**3728**
			3382-93
3312	**Signetics**	**PCD3312**	★**3705**
			★**3728**
			3382-94
3315	**Signetics**	**PCD3315**	★**3728**
33171	Motorola	MC33171	3350-52
33172	Motorola	MC33172	3363-96
33174	Motorola	MC33174	3370-56
3318	**RCA**	**CA3318**	★**3216**
			2837-25
332	AnalogSys	MA-332	¶ 406-20
		MA332	3354-15
	Intel	iSBX332	2033-5
	MicroInds	MIB332	2036-15
	Motorola	**MVME332**	★**2111**
	Siemens	TCA332	3357-97
	Siliconix	DF332A	3377-160
	TeledyneS	332A/C	852-7
		332B/M	852-8
3320	**Motorola**	**MC3320**	★**3614**
			3316-183
	Signetics	PCD3320	3378-111
3321	**Motorola**	**MC3321**	★**3614**
			3316-184
	Signetics	PCD3321	3378-112
3322	Signetics	PCD3322	3378-113
3323	Signetics	PCD3323	3378-114
3324	**Motorola**	**MC3324**	★**3620**
			★**3631**
			3315-16
			3401-123
		MC3324A	★**3620**
			★**3631**
			3315-1
			3401-124
	Signetics	PCD3324	3378-48

¶ Indicates page number in Application Note Directory.
★ Indicates additional data is provided on the page noted.

Base Number	Source	Device	Page-Line
3325	**Motorola**	**MC3325**	★**3614**
			3319-143
	Signetics	PCD3325	3378-49
3329	**Burr-Brown**	**3329**	★**3150**
			3330-112
333	AnalogSys	MA-333	¶ 405-18
		MA333	3357-8
	Motorola	**MVME333**	★**2111**
	National	LM333	3394-62
	TeledyneS	333A/C	852-91
		333B/M	852-92
	Toshiba	TSU333-2	3850-16
3330	Motorola	MC3330	3306-49
		TDA3330	★**3612**
			3324-131
	Sprague	ULN-3330	3400-88
3333	Motorola	MC3333	3319-124
		TDA3333	★**3612**
			3324-132
3334	**Motorola**	**MC3334**	★**3614**
			3319-122
		MCCF3334	★**3614**
			3319-123
3335	Motorola	TDA3335	3324-133
3336	**MicroNet**	**MN3336**	★**3204**
3338	**RCA**	**CA3338**	★**3216**
			2850-17
334	AnalogSys	MA334	3357-9
	LinearTech	LM334	3398-103
	National	LM334	3398-106
			3404-145
	TeledyneS	334A/C	852-15
	Telefunken	U334	3323-75
3340	**Motorola**	**MC3340**	★**3614**
			3320-141
	Signetics	PCD3340	3378-38
3341	AMD	AM3341C	3809-36
	Cypress	CY3341-2C	3809-45
		CY3341C	3809-43
	Fairchild	3341	3809-37
		3341A	3809-41
		3341M	3809-38
3342	Fairchild	3342	3857-18
3343	**Signetics**	**PCD3343**	★**3728**
3344	**Motorola**	**MC3344**	★**3614**
			3319-140
			3399-99
3346	**Motorola**	**MC3346**	★**3614**
			3309-10
3347	AMD	AM3347	3857-22
	Fairchild	3347	3857-23
3348	Fairchild	3348	3856-117
	MicroNet	**MN3348**	★**3204**
			2865-28
		MN3348H	★**3204**
			2865-29
3349	Fairchild	3349	3856-118
	MicroNet	**MN3349**	★**3204**
			2865-30
		MN3349H	★**3204**
			2865-31
335	Amperex	OM335	3325-148
	AnalogSys	MJ335	3398-119
	National	LM335	3404-146
	TeledyneS	335A/C	852-14
3350	**Motorola**	**MC3350**	★**3614**
			3310-29
	Sanyo	LA3350	3322-124
3351	Fairchild	3351-3	3809-34
		3351M	3809-32
33511	Fairchild	33511	3809-35
33512	Fairchild	33512	3809-31
3356	**Motorola**	**MC3356**	★**3613**
			3379-90
3357	Fairchild	3357-1	3857-31
		3357-2	3857-24
		F3357M	3857-32
	Motorola	**MC3357**	★**3613**
			3322-101
3358	**Motorola**	**MC3358**	★**3617**
			3368-4
3359	**Motorola**	**MC3359**	★**3613**
			3322-50
336	Amperex	OM336	3325-149
	AnalogSys	MA336	3368-11
	HybridSys	DAC336B-1	2853-41

(Continued)

Base Number	Source	Device	Page-Line
336	HybridSys	DAC336B-12	2865-8
		DAC336B-8	2853-38
		DAC336C-12	2865-9
		DAC336C-8	2853-39
	LinearTech	LM336-2	3402-46
	MicroNet	DAC336	2866-19
	National	LM336-2	3402-68
		LM336-5	3402-117
		LM336B-5	3402-118
	Telefunken	U336	3323-76
3360	**Signetics**	**PCD3360**	★**3728**
3361	**Motorola**	**MC3361**	★**3613**
			3322-51
	National	LM3361	3322-9
		LM3361A	3322-67
	Samsung	MC3361	3321-138
	Sanyo	LA3361	3322-125
	Signetics	**PCD3361**	★**3728**
3362	DataTrans	DT3362	2037-55
3365	Sanyo	LA3365	3322-126
3366	DataTrans	DT3366	2037-54
3368	DataTrans	DT3368	2033-11
3369	DataTrans	DT3369	2037-70
337	Amperex	OM337	3325-150
		OM337A	3325-151
	HybridSys	DAC337B-0	2853-42
		DAC337B-2	2853-43
		DAC337B-3	2857-44
		DAC337B-4	2857-31
		DAC337B-5	2857-32
		DAC337B-6	2854-1
		DAC337B-7	2857-45
		DAC337C-0	2853-44
		DAC337C-1	2853-45
		DAC337C-2	2853-46
		DAC337C-3	2857-46
		DAC337C-4	2857-33
		DAC337C-5	2857-34
		DAC337C-6	2854-2
		DAC337C-7	2857-47
	IPS	**IP337**	★**3599**
			3394-69
		IP337A	★**3599**
			3394-70
		IP337AHV	★**3599**
			3395-20
		IP337HV	★**3599**
			3395-21
	Intel	iSBC337A	2033-6
	LinearTech	LM337	3394-72
		LM337HV	3395-13
			3395-23
		LT337A	3394-74
		LT337AHV	3395-15
			3395-25
	MCE	MCELM337	3394-77
	Motorola	**LM337**	★**3625**
			3394-80
		LM337M	★**3625**
			3394-64
	National	LM337	3394-83
			3395-35
		LM337HV	3395-27
		LM337L	3395-32
		LT337A	3394-85
	SiliconG	SG337	3394-90
		SG337A	3394-91
		SG337HV	3395-29
	Telefunken	U337	3323-77
	ThomsonCSF	LM337	3394-93
			3395-37
	Unitrode	UC337	3395-3
			3395-40
3370	Motorola	MC3370	3405-130
	Sanyo	LA3370	3322-127
3371	DataTrans	DT3371	2037-53
3373	**Motorola**	**MC3373**	★**3613**
			★**3632**
			3322-155
3374	**Harris**	**HS3374RH**	★ **632**
			837-43
3375	Sanyo	LA3375	3322-128
3376	DataTrans	DT3376	2037-42
338	Fairchild	μA338	3393-41
	HybridSys	DAC338B-12-0	2869-1
		DAC338B-12-1	2867-32

(Continued)

Base Number	Source	Device	Page-Line
338	HybridSys	DAC338B-12-2	2864-32
	IPS	**IP338**	★**3599**
			3393-46
		IP338A	★**3599**
			3393-47
	Lambda	LLM338	3393-62
	LinearTech	LM338	3393-49
		LT338A	3393-51
	Micropac	MLM338-05	3385-61
		MLM338-12	3387-95
		MLM338-15	3388-86
	National	LM338	3393-54
	SiliconG	SG338	3393-59
		SG338A	3393-60
	Telefunken	U338	3323-78
		U338M	¶ 381-5
3380	Sanyo	LA3380	3322-129
3381	Sanyo	LA3381	3322-130
3382	DataTrans	DT3382	2037-57
3386	**Motorola**	**MC3386**	★**3614**
			3309-11
3388	DataTrans	DT3388	2033-12
	RCA	**CA3388**	★**3216**
339	Amperex	OM339	3325-152
	Fairchild	μA339C	3316-17
	Motorola	**LM339**	★**3631**
			3316-21
		LM339A	★**3631**
			3315-39
	National	LM339	3316-23
		LM339A	3315-41
		LP339	3316-1
	NEC	μPC339	3316-24
	PMI	PM-339	3316-26
		PM-339A	3315-43
	Raytheon	LM339	3316-28
	RCA	**CA339**	★**3672**
			★**3677**
			3316-30
		CA339A	★**3672**
			★**3677**
			3315-45
	Samsung	**LM339**	★**3679**
			3315-55
		LM339A	★**3679**
			3315-29
	SGS	LM339	3316-32
		LM339A	3315-47
	Signetics	**LM339**	★**3721**
			★**3725**
			3316-34
	ThomsonCSF	LM339	3316-35
3390	Sanyo	LA3390	3322-131
3393	**Motorola**	**MC3393**	★**3613**
			3376-75
3396	**Motorola**	**MC3396**	★**3613**
			3375-72
340	**IPS**	**IP340-12**	★**3599**
			3387-31
		IP340-15	★**3599**
			3388-31
		IP340-5	★**3599**
			3384-95
		IP340A-12	★**3599**
			3387-32
		IP340A-15	★**3599**
			3388-32
		IP340A-5	★**3599**
			3384-96
	Intel	iSBC340	2032-8
		iSBCMEM/340	2032-19
	Motorola	**LM340-12**	★**3622**
			★**3624**
			3387-41
		LM340-15	★**3622**
			★**3624**
			3388-40
		LM340-18	★**3622**
			★**3624**
			3388-129
		LM340-24	★**3622**
			★**3624**
			3389-91
		LM340-5	★**3622**
			★**3624**
			3384-104

(Continued)

Base Number	Source	Device	Page-Line
340	**Motorola**	**LM340-6**	★**3622**
			★**3624**
			3385-100
		LM340-8	★**3622**
			★**3624**
			3386-44
		LM340A-12	★**3622**
			★**3624**
			3387-42
		MVME340	★**2111**
	National	COP340	1451-1
		LM340	¶ 428-1
		LM340-12	3387-50
		LM340-15	3388-47
		LM340-5	3384-114
		LM340A-12	3387-51
		LM340A-15	3388-48
		LM340A-5	3384-115
		LM340LA-12	3386-112
		LM340LA-15	3387-114
	SiliconG	SG340-05K	3384-121
		SG340-05R	3384-122
		SG340-05T	3384-49
		SG340-06K	3385-111
		SG340-06R	3385-112
		SG340-06T	3385-84
		SG340-08K	3386-55
		SG340-08R	3386-56
		SG340-08T	3386-26
		SG340-12K	3387-59
		SG340-12P	3387-60
		SG340-12R	3387-61
		SG340-12T	3387-5
		SG340-18K	3389-7
		SG340-18R	3389-8
		SG340-18T	3388-106
		SG340-20P	3389-42
		SG340-20R	3389-43
		SG340-20T	3389-31
		SG340-24K	3389-98
		SG340-24P	3389-99
		SG340-24R	3389-100
		SG340-24T	3389-69
	Telefunken	U340	2880-7
			3325-82
		U340M	¶ 381-5
3400	**Fujitsu**	**E3400**	★**4625**
	GI	ER3400	3811-104
			¶ 433-2
			¶ 433-6
			¶ 433-10
34001	**Motorola**	**MC34001**	★**3616**
			3357-25
		MC34001A	★**3616**
			3346-30
		MC34001B	★**3616**
			3352-24
34002	**Motorola**	**MC34002**	★**3617**
			3368-14
		MC34002A	★**3617**
			3362-50
		MC34002B	★**3617**
			3365-11
34003	Motorola	MC34003A	3361-31
34004	**Motorola**	**MC34004**	★**3618**
			3373-35
		MC34004B	★**3618**
			3371-26
34009	MCE	MT34009	837-50
3401	**Goldstar**	**GL3401**	★**3580**
			3325-100
	Motorola	**MC3401**	★**3618**
			3334-182
	National	LM3401	3334-183
	Raytheon	RC3401	3334-184
	RCA	**CA3401**	★**3674**
			3334-185
	SiliconG	SG3401	3308-26
			¶ 410-2
34010	**HoneywellSPT**	**HDAC34010**	★**3680**
			843-133
			2849-4
			1466-1
	Motorola	**MC34010A**	★**3633**
			3379-38

Arranged alphanumerically from left to right.

Base Number	Source	Device	Page-Line
34011	**Motorola**	**MC34011A**	★ **3633**
			3379-36
34012	**Motorola**	**MC34012**	★ **3633**
			3382-25
		MC34012-1	★ **3633**
			3382-31
		MC34012-2	★ **3633**
			3382-32
		MC34012-3	★ **3633**
			3382-33
34013	**Motorola**	**MC34013**	★ **3633**
			3381-46
34014	**Motorola**	**MC34014**	★ **3633**
			3381-47
34015	Motorola	MC34015	3378-88
34017	Cherry	CS34017	3382-24
	Motorola	**MC34017**	★ **3633**
			3382-26
34018	**Motorola**	**MC34018**	★ **3633**
			3381-24
34019	Motorola	MC34019	3381-65
34020	**HoneywellSPT**	**HDAC34020**	★ **3681**
			843-134
			2849-5
			1466-2
3403	Exar	XR3403	3334-168
			¶ 404-1
	Fairchild	μA3403C	3334-171
	Motorola	**MC3403**	★ **3618**
			3334-173
	NEC	μPC3403	3335-7
	Raytheon	RC3403	3334-175
		RC3403A	3372-45
	SGS	MC3403	3373-41
	Signetics	**MC3403**	★ **3721**
			★ **3729**
			3373-42
	ThomsonCSF	MC3403	3373-43
		TDC3403	3371-53
		TDF3403	3373-9
3404	Sharp	IR3404	3353-30
34044	Motorola	MC34044	2892-11
34046	Motorola	MC34046S	2892-13
34047	Motorola	MC34047S	2892-14
3405	Motorola	MC3405	3307-66
			3316-48
34060	**IPS**	**IP34060**	★ **3599**
			3395-130
	Motorola	**MC34060**	★ **3626**
			3396-16
34061	**Motorola**	**MC34061**	★ **3621**
			3401-119
		MC34061A	★ **3621**
			3401-120
	TI	TMS34061	2892-33
			1465-70
			1466-42
34062	**Motorola**	**MC34062**	★ **3621**
			3401-44
34063	**IPS**	**IP34063**	★ **3599**
			3395-131
	Motorola	**MC34063**	★ **3626**
			3396-17
			¶ 426-16
			¶ 427-18
34070	TI	TMS34070	2849-10
			1466-33
34071	Motorola	MC34071	3350-36
		MC34071A	3346-127
34072	Motorola	MC34072	3363-83
		MC34072A	3363-31
34074	**Motorola**	**MC34074**	★ **3618**
			3334-178
			3371-2
		MC34074A	★ **3618**
			3370-12
3408	Motorola	MC3408	2854-52
34084	**Motorola**	**MC34084**	★ **3618**
			3373-29
		MC34084A	★ **3618**
			3371-21
34085	**Motorola**	**MC34085**	★ **3618**
			3373-32
		MC34085A	★ **3618**
			3371-24
341	Intel	iSBC341	2032-21
	National	COP341	1451-2
		LM341	¶ 428-1
		LM341-12	3386-126
		LM341-15	3387-128
		LM341-5	3384-39
	TeledyneS	341A/C	852-81
		341B/M	852-82
3410	Motorola	MC3410	2860-2
		MC3410C	2858-23
	RCA	CA3410	3373-47
		CA3410A	3373-7
	SGS	TDA3410	3319-24
	Signetics	**MC3410**	★ **3725**
			2860-4
		MC3410C	★ **3725**
			2858-24
34115	**Motorola**	**MC34115**	★ **3633**
			3378-28
34118	**Motorola**	**MC34118**	★ **3633**
34119	**Motorola**	**MC34119**	★ **3633**
3412	**MicroNet**	**MN3412**	★ **3204**
			2865-46
	Motorola	MC3412	2862-33
34129	**Motorola**	**MC34129**	★ **3633**
3416	**Motorola**	**MC3416**	★ **3633**
			2829-18
			¶ 401-14
3417	**Motorola**	**MC3417**	★ **3633**
			3378-29
3418	**Motorola**	**MC3418**	★ **3633**
			3378-30
3419	**Motorola**	**MC3419**	★ **3633**
			3381-66
		MC3419A	★ **3633**
			3381-67
		MC3419C	★ **3633**
			3381-68
342	AnalogSys	MA342	3350-38
	National	COP342	1450-123
		LM342-12	3386-120
		LM342-15	3387-122
		LM342-5	3384-32
	SGS	LS342	3380-76
	TeledyneS	342A/C	852-97
		342B/M	852-98
3420	**Motorola**	**MC3420**	★ **3626**
			3396-18
	RCA	**CA3420**	★ **3674**
			3356-58
		CA3420A	★ **3674**
			3351-3
		CA3420B	★ **3674**
			3345-24
	SGS	TDA3420	3319-25
3423	**Motorola**	**MC3423**	★ **3620**
			3401-45
	NEC	μPC3423	3401-47
	SiliconG	SG3423	3401-50
		SG3423A	3401-51
3424	**Motorola**	**MC3424**	★ **3620**
			★ **3631**
			3315-17
			3401-125
		MC3424A	★ **3620**
			★ **3631**
			3315-2
			3401-126
3425	Motorola	MC3425	3401-132
		MC3425A	3401-133
3426	Motorola	MC3426	3327-136
343	**MicroNet**	**MN343**	★ **3205**
			3404-36
		MN343H	★ **3205**
			3404-37
	National	LM343	3331-105
	TeledyneS	343A/C	852-1
		343B/M	852-2
3430	**Motorola**	**MC3430**	★ **3631**
			2899-22
			3315-48
3431	**Motorola**	**MC3431**	★ **3631**
			2899-23
			3315-49
3432	**Motorola**	**MC3432**	★ **3631**
			2899-24
			3315-50
3433	**Motorola**	**MC3433**	★ **3631**
			2899-25
			3315-51
3437	**Motorola**	**MC3437**	★ **3211**
			2885-53
3438	Motorola	MC3438	2888-1
344	Intel	iSBX344	2005-30
	MicroNet	**MN344**	★ **3205**
			3404-38
		MN344H	★ **3205**
			3404-39
	Motorola	**HDS-344**	★ **1904**
	National	COP344C	1450-111
		LM344	3331-93
			3356-40
	TeledyneS	344A/C	852-78
3440	**Motorola**	**MC3440A**	★ **3210**
			2888-25
	RCA	**CA3440**	★ **3674**
			3357-7
		CA3440A	★ **3674**
			3351-11
		CA3440B	★ **3674**
			3345-32
3441	**Motorola**	**MC3441A**	★ **3210**
			2888-26
3442	Motorola	MC3442A	1455-30
3443	Motorola	MC3443A	2888-27
3446	**Motorola**	**MC3446A**	★ **3210**
			2888-13
3447	**Motorola**	**MC3447**	★ **3210**
			2891-10
3448	AMD	AM3448A	2888-17
	Exar	**XR3448**	★ **3551**
			1467-82
	Motorola	**MC3448A**	★ **3210**
			2888-18
345	Amperex	OM345	3325-153
	AnalogSys	MA345	3363-43
	National	COP345C	1450-112
	Siemens	TCA345A	3404-163
3450	**Burr-Brown**	**3450**	★ **3151**
	Motorola	**MC3450**	★ **3211**
			2887-15
3451	**Burr-Brown**	**3451**	★ **3151**
3452	**Burr-Brown**	**3452**	★ **3151**
	Motorola	**MC3452**	★ **3211**
			2887-18
3453	**Motorola**	**MC3453A**	★ **3211**
			2884-10
3455	**Burr-Brown**	**3455**	★ **3151**
3456	**Burr-Brown**	**3456**	★ **3151**
			3306-137
	Motorola	MC3456	3383-80
3458	**Motorola**	**MC3458**	★ **3617**
			3334-135
3459	Motorola	MC3459	2893-1
345K5	National	LM345K5	3390-65
			3390-87
346	**AD**	**AD346**	★ **3140**
			3403-152
		ADX346	3403-161
	Exar	XR346	3334-68
		XR346-2	3372-47
	HybridSys	HS346	3404-20
	MicroNet	**MN346**	★ **3205**
			3404-40
		MN346H	★ **3205**
			3404-41
	National	LM346	3334-74
	SGS	LS346	3380-106
	ThomsonCSF	LM346	3372-44
34611	Sharp	LR34611	3320-147
34621	Sharp	LR34621	3320-148
3466	Motorola	MC3466	2893-10
3467	Fairchild	FQ3467	3310-54
	Motorola	MC3467	3307-102
		MHQ3467	3310-56
	National	DH3467C	3310-57
3468	Fairchild	FQ3468	3310-55
	Motorola	MC3468	3307-103
3469	Motorola	MC3469	2892-34
			1467-28
347	HybridSys	DAC347LPB-10B	2857-27
		DAC347LPB-10U	2857-28
		DAC347LPB-12U	2865-42
		DAC347LPC-10B	2857-29
		DAC347LPC-10U	2857-30
		DAC347LPC-12B	2865-43
		DAC347LPC-12U	2865-44
		HAC347LPB-12B	2865-45
	MicroNet	**MN347**	★ **3205**
			3404-42
		MN347H	★ **3205**
			3404-43
	Motorola	**LF347**	★ **3618**
			3373-37
		LF347B	★ **3618**
			3371-27
	National	LF347	3373-38
			¶ 405-15
		LF347B	3371-28
	TeledyneS	347A/C	852-99
		347B/M	852-100
3470	Cherry	CS3470A	1466-112
	Exar	**XR3470A**	★ **3552**
			3306-65
		XR3470B	★ **3552**
			3306-66
	Motorola	MC3470	3306-67
		MC3470A	3306-68
3471	Cherry	CS3471	1466-113
	Exar	**XR3471**	★ **3551**
			1467-86
	Motorola	MC3471	2892-35
			1467-29
3476	**Motorola**	**MC3476**	★ **3616**
			3347-24
			3334-46
3479	Motorola	MC3479	2896-19
348	Fairchild	μA348C	3372-34
	HybridSys	DAC348B-10	2857-25
		DAC348B-12	2865-37
		DAC348C-10	2857-26
		DAC348C-12	2865-38
	Motorola	**LM348**	★ **3618**
			3372-36
	National	LM348	3372-38
	Raytheon	LM348	3372-40
	ThomsonCSF	LM348	3372-31
3480	Motorola	MC3480	2892-60
			¶ 437-16
			1455-31
3481	**Motorola**	**MC3481**	★ **3211**
			2881-31
3482	Motorola	MC3482	2898-127
		MC3482A	2898-128
			1470-73
		MC3482B	2898-129
			1470-74
3484	**Motorola**	**MC3484**	★ **3614**
			3319-128
3484V2	Motorola	MC3484V2	2896-101
			3319-135
3484V4	Motorola	MC3484V4	2896-102
			3319-136
3485	**Motorola**	**MC3485**	★ **3211**
			2881-32
3486	Fairchild	μA3486	2887-27
	Intech	MC3486	¶ 396-7
	Motorola	**MC3486**	★ **3211**
			★ **3212**
			2887-25
			¶ 398-11
	National	DS3486	2887-26
3487	**Fairchild**	**μA3487**	★ **3571**
			2884-6
	Intech	MC3487	¶ 396-7
	Motorola	**MC3487**	★ **3211**
			★ **3212**
			2884-7
			¶ 398-11
	National	DS3487	2884-8
3488	Intech	MC3488	¶ 396-7
	Motorola	MC3488	¶ 398-11
		MC3488A	★ **3212**
			2881-11
		MC3488B	★ **3212**
			2881-10

¶ Indicates page number in Application Note Directory.
★ Indicates additional data is provided on the page noted.

Base Number	Source	Device	Page-Line
349	DEC	DC349-AA	2901-18
	HybridSys	DAC349B-12	2865-39
		DAC349B-3D	2870-8
		DAC349C-12	2865-40
		DAC349C-3D	2870-9
	National	LM349	3372-42
	TeledyneS	349A/C	853-8
3490	Motorola	MC3490	2877-7
3492	Motorola	MC3492	2877-60
3493	**RCA**	**CA3493**	★**3674**
			3343-15
		CA3493B	★**3674**
			3338-54
3494	Motorola	MC3494	2877-8
34F19	**Motorola**	**MC34F19**	★**3633**
			3381-69
		MC34F19A	★**3633**
			3381-70
34L10	**TI**	**TBP34L10**	★**4232**
			3814-68
34L16	**TI**	**TBP34L16X-25**	★**4236**
			3819-116
34L162	**TI**	**TBP34L162**	★ **729**
			★**4236**
			3819-115
34R16	**TI**	**TBP34R16**	★**4231**
			3819-100
34R162	TI	TBP34R162	3819-102
34S10	**TI**	**TBP34S10-25**	★**4232**
			3814-67
34S16	**TI**	**TBP34S16X-25**	★**4236**
			3819-112
34S162	**TI**	**TBP34S162-25**	★ **729**
			★**4236**
			3819-103
		TBP34S162-45	★ **729**
			★**4236**
			3820-7
34S165	TI	TBP34S165	3820-30
34S166	TI	TBP34S166	3820-31
34SA10	**TI**	**TBP34SA10-25**	★**4232**
			3814-69
34SA16	**TI**	**TBP34SA16X-25**	
			★**4236**
			3819-107
34SA162			
	TI	**TBP34SA162**	★**4236**
			3819-106
34SA165			
	TI	TBP34SA165	3820-28
34SA166			
	TI	TBP34SA166	3820-29
34SR16	**TI**	**TBP34SR16**	★**4240**
			3819-101
34SR165			
	TI	TBP34SR165	3820-26
34SR166			
	TI	TBP34SR166	3820-27
35	Motorola	EXORsetDS35	1817-19
		EXORsetDs35	1817-20
	National	LM35	3404-147
	Onset	DDC-35	2030-5
350	Amperex	OM350	3325-154
	DataTrans	DTX350	2032-46
	Fairchild	μA350	3393-13
	Fujitsu	**B350**	★**4625**
			4444-34
	IPS	**IP350**	★**3599**
			3393-18
		IP350A	★**3599**
			3393-19
	Intel	iSBX350	2033-1
	Lambda	LLM350	3393-61
	LinearTech	LM350	3393-22
		LM350A	3393-23
	MicroPwr	**MP350**	★**3605**
			3309-162
	Motorola	**LM350**	★**3625**
			3393-26
		MVME350	★**2111**
	National	LM350	3393-29
	SiliconG	SG350	3393-34
		SG350A	3393-35
	TeledyneS	350A/C	852-95
	Unitrode	UC350	3393-38
3500	AMD	AMMPA3500B	4462-3
	AMCC	**Q3500S**	★**4603**
			4439-13
	Burr-Brown	3500	¶ 406-2
		3500 Series	¶ 420-9
		3500A	★**3149**
			★**3154**
			3353-1
		3500B	★**3149**
			★**3154**
			3346-75
		3500C	★**3149**
			★**3154**
			3344-55
		3500E	★**3149**
			★**3154**
			3341-51
			3343-19
		3500MP	★**3149**
			★**3154**
			3363-7
		3500R	★**3149**
			★**3154**
			3353-2
		3500R/MIL	★**3149**
			★**3154**
			3353-3
		3500S	★**3149**
			★**3154**
			3346-76
		3500T	★**3149**
			★**3154**
			3344-56
		3500U/883B	★**3149**
			★**3154**
			3353-4
	Cherry	CS3500	4462-12
	Honeywell	HC3500R	4447-19
		HM3500(R)	4447-18
	National	TDA3500	3324-142
	Plessey	CLA3500	4453-40
	Sanyo	LB3500	3375-75
	Signetics	TDA3500	3325-13
35001	**Motorola**	**MC35001**	★**3616**
			3357-23
		MC35001A	★**3616**
			3346-24
		MC35001B	★**3616**
			3352-12
35002	**Motorola**	**MC35002**	★**3617**
			3368-13
		MC35002A	★**3617**
			3362-45
		MC35002B	★**3617**
			3365-14
35004	**Motorola**	**MC35004**	★**3618**
			3373-36
		MC35004A	★**3618**
			3369-35
		MC35004B	★**3618**
			3371-17
3501	Aptek	AMS3501	3380-77
	Burr-Brown	**3501A**	★**3149**
			3352-34
		3501B	★**3149**
			3346-65
		3501C	★**3149**
			3346-64
		3501R	★**3149**
			3352-35
		3501S	★**3149**
			3346-66
	National	ADD3501	2848-21
			¶ 421-2
		TDA3501	3324-143
	SiliconG	SG3501	¶ 427-19
		SG3501A	3392-91
	Sprague	UGN-3501	891-87
			3399-121
	Toshiba	TD3501A	860-71
3502	SiliconG	SG3502	3395-51
	Toshiba	TD3502A	854-42
3503	Exar	XR3503	3334-169
	Motorola	**MC3503**	★**3618**
			3334-174
	Raytheon	RM3503	3334-176
			(Continued)
3503	Raytheon	RM3503A	3370-55
	SGS	MC3503	3371-51
	Signetics	**MC3503**	★**3729**
			3371-52
	SiliconG	SG3503	3402-76
	Toshiba	TD3503	3856-62
3504	**Goldstar**	**GL3504**	★**3580**
3505	Motorola	MC3505	3307-67
			3316-36
	Signetics	**TDA3505**	★**3731**
			3325-14
	Toshiba	TD3505A	859-60
3506	**GouldAMI**	**S3506**	★**3590**
			3377-79
	Telefunken	TDA3506	3325-36
35060	**IPS**	**IP35060**	★**3599**
			3395-132
	Motorola	**MC35060**	★**3626**
			3396-19
35061	Motorola	MC35061	3401-121
		MC35061A	3401-122
35062	Motorola	35062	3401-43
		MC35062	★**3621**
			3401-118
35063	**IPS**	**IP35063**	★**3599**
			3395-133
	Motorola	**MC35063**	★**3626**
			3396-20
3507	**Burr-Brown**	**3507J**	★**3150**
			3357-63
	GouldAMI	**S3507**	★**3590**
			3377-118
35071	Motorola	MC35071	3350-37
		MC35071A	3346-128
35072	Motorola	MC35072	3363-84
		MC35072A	3363-32
35074	**Motorola**	**MC35074**	★**3618**
			3334-179
			3371-3
		MC35074A	★**3618**
			3370-13
3508	**Burr-Brown**	**3508J**	★**3150**
			3352-56
35084	**Motorola**	**MC35084**	★**3618**
			3373-30
		MC35084A	★**3618**
			3371-22
35085	**Motorola**	**MC35085**	★**3618**
			3373-33
		MC35085A	★**3618**
			3371-25
3509	SiliconG	SG3509	3398-36
351	DY-4	DVME-351	2045-27
	Intel	iSBX351	2033-3
	MicroPwr	**MP351**	★**3605**
			3309-163
	Motorola	**LF351**	★**3616**
			3348-16
			3330-32
			3357-22
	National	LF351	3330-34
			3357-29
	TeledyneS	351A/C	852-94
	ThomsonCSF	LF351	3357-24
		LF351A	3346-39
		LF351B	3352-27
3510	**Burr-Brown**	**3510A**	★**3149**
			★**3154**
			3340-27
		3510B	★**3149**
			★**3154**
			3341-52
			3340-1
		3510C	★**3149**
			★**3154**
			3332-26
			3341-8
			3338-1
		3510S	★**3149**
			★**3154**
			3341-53
			3340-2
		3510V	★**3149**
			★**3154**
			3340-3
	Motorola	MC3510	2860-3
			(Continued)
3510	RIFA	PBD3510	2894-29
			3380-122
	Signetics	**MC3510**	★**3725**
			2858-7
		TDA3510	3325-15
3511	National	ADC3511	2848-20
			¶ 387-16
	RIFA	PBD3511	2894-30
			3380-123
3512	Motorola	MC3512	2859-89
3513	RIFA	PBD3513	2896-128
			3380-124
3515	RIFA	PBD3515	3381-1
3516	Fairchild	F3516-35	3849-52
		F3516-45	3849-57
	Harris	**HS3516RH**	★ **665**
			3346-218
3517	Motorola	MC3517	3378-31
	RIFA	PBD3517	2896-29
	Unitrode	**UC3517**	★**3741**
			3400-110
35171	Motorola	MC35171	3350-53
35172	Motorola	MC35172	3363-97
35174	Motorola	MC35174	3370-57
3518	Motorola	MC3518	3378-32
3519	Motorola	MC3519	3381-71
352	Intel	iSBX352	2032-45
	MicroPwr	**MP352**	★**3605**
			3309-164
3520	**Motorola**	**MC3520**	★**3626**
			3396-21
	RIFA	PBD3520	2894-19
			3381-2
	Signetics	TDA3520	3325-16
3521	Burr-Brown	3521	¶ 405-17
		3521H	★**3149**
			3342-1
		3521J	★**3149**
			3340-56
		3521K	★**3149**
			3340-55
		3521L	★**3149**
			3341-54
			3340-52
		3521R	★**3149**
			3340-57
35212	**GouldAMI**	**S35212**	★**3582**
			3380-37
		S35212A	★**3582**
			3380-38
	Mitel	MT35212A	3380-39
35213	**GouldAMI**	**S35213**	★**3584**
			3379-109
	Mitel	MT35213	3379-110
3522	**Burr-Brown**	**3522J**	★**3149**
			3344-1
		3522K	★**3149**
			3340-98
		3522L	★**3149**
			3332-30
			3350-58
		3522S	★**3149**
			3340-99
	GouldAMI	S3522	3380-34
	SiliconSys	**SSI3522**	★**3737**
			3380-35
3523	Burr-Brown	3523J	3332-22
			3343-46
		3523K	3332-16
			3340-83
		3523L	3332-6
			3340-81
	Motorola	**MC3523**	★**3620**
			3401-46
	RIFA	PBD3523-11	2894-105
			3310-113
		PBD3523-12	2894-58
			3310-114
		PBD3523-13	2894-77
			3310-115
		PBD3523-14	2894-124
			3310-116
	SiliconG	SG3523	3401-52
		SG3523A	3401-53
352301	RIFA	RBD352301	3310-117
352302	RIFA	RBD352302	3310-118

Arranged alphanumerically from left to right.

PART NUMBER INDEX

Base Number	Source	Device	Page-Line
352303	RIFA	RBD352303	3310-119
352304	RIFA	PBD352304	2894-59
3524	Cherry	CS3524	3395-76
		CS3524A	3395-77
	Exar	**XR3524**	★**3558**
			3395-97
	GouldAMI	S3524	3379-12
	IPS	**IP3524**	★**3599**
			3395-134
		IP3524B	★**3599**
			3395-135
	LinearTech	LT3524	3395-167
		SG3524	3396-4
	Motorola	**MC3524**	★**3620**
			★**3631**
			3315-14
			3401-127
		MC3524A	★**3620**
			★**3631**
			3315-3
			3401-128
	National	LM3524	3396-40
	RCA	CA3524	3396-54
			¶ 421-17
	SGS	SG3524	3315-15
			3401-129
		SG3524A	3315-4
			3401-130
		UC3524A	3315-5
			3401-131
	Signetics	**SG3524**	★**3715**
			★**3720**
			★**3730**
			3396-86
	SiliconG	SG3524	3396-100
			¶ 422-1
			¶ 422-3
		SG3524B	3396-101
	Unitrode	**UC3524**	★**3739**
			3397-62
		UC3524A	★**3739**
			★**3739**
			3397-63
3525	AMD	AMMPA3525	4462-4
	Cherry	CS3525A	3395-78
	Exar	XR3525A	3395-98
	GouldAMI	S3525A	3377-16
			3377-27
		S3525A/B	¶ 414-2
	IPS	**IP3525A**	★**3599**
			3395-136
	LinearTech	LT3525A	3395-168
		SG3525A	3396-5
	Motorola	MC3525	3401-134
		MC3525A	3401-135
		SG3525A	★**3626**
			3396-28
	RIFA	RL3525A	3396-55
	SiliconG	SG3525A	3396-102
	SiliconSys	SSI3525A	3377-18
			3377-30
		SSI3525B	3377-19
			3377-31
	Unitrode	**UC3525A**	★**3739**
			3397-64
3526	**GouldAMI**	**S3526B**	★**3591**
			3382-57
	IPS	**IP3526**	★**3599**
			3395-137
		IP3526A	★**3599**
			3395-138
	LinearTech	LT3526	3395-169
	Motorola	**SG3526**	★**3626**
			3396-29
	Signetics	**SG3526A**	★**3716**
			★**3730**
			3396-87
	SiliconG	SG3526	3396-103
		SG3526A	3396-104
	Sprague	SG3526	3395-61
	Unitrode	**UC3526A**	★**3739**
			3397-65
3527	**Burr-Brown**	**3527A**	★**3149**
			3340-95
		3527B	★**3149**
			3341-1
			(Continued)
3527	Burr-Brown	3527B	3340-51
		3527C	★**3149**
			3340-94
	Cherry	CS3527A	3395-79
	Exar	**XR3527A**	★**3559**
			3395-99
	IPS	**IP3527**	★**3599**
	LinearTech	LT3527A	3395-170
		SG3527A	3396-6
	Motorola	**SG3527A**	★**3626**
			3396-30
	SGS	SG3527A	3396-63
	SiliconG	SG3527A	3396-105
	Unitrode	**UC3527A**	★**3739**
			3397-66
3528	**Burr-Brown**	**3528A**	★**3149**
			3332-19
			3340-84
		3528B	★**3149**
			3332-11
			3335-2
		3528C	★**3149**
			3332-3
			3340-79
		BB3528CM	¶ 406-8
	GouldAMI	**S3528**	★**3592**
			3379-53
3529	**GouldAMI**	**S3529**	★**3593**
			3379-79
353	**Motorola**	**LF353**	★**3617**
			3368-21
	National	LF353	3368-22
			¶ 405-15
	Siemens	S353	891-112
	SiliconG	SG353-05	3385-50
		SG353-12	3387-90
		SG353-15	3388-82
	Telefunken	U353M	¶ 402-6
	ThomsonCSF	LF353	3368-20
		LF353A	3362-44
		LF353B	3365-15
3530	**GouldAMI**	**S3530**	★**3586**
			3380-4
	Harris	**HS3530RH**	★ **667**
			3346-209
	Mitel	MT3530	3380-5
35316	Fairchild	F35316-25	3849-41
		F35316-30	3849-45
3532	Fairchild	F3532-30	3849-105
		F3532-35	3849-118
		F3532-45	3850-5
	SiliconG	SG3532	3394-5
3533	Fairchild	F3533-30	3849-106
		F3533-35	3849-119
		F3533-45	3850-6
3534	RIFA	PBD3534	3382-85
3535	RIFA	PBD3535	3382-86
3538	RIFA	PBD3538-11	2894-138
			3311-1
		PBD3538-12	2894-139
			3311-2
		PBD3538-13	2894-152
			3311-3
		PBD3538-14	2894-153
			3311-4
354	Telefunken	U354M	¶ 402-6
3540	**Signetics**	**TDA3540**	★**3731**
			3327-71
3541	**Signetics**	**TDA3541**	★**3731**
			3308-19
			3327-72
3542	AD	AD3542J	3357-142
	Burr-Brown	**3542J**	★**3149**
			3357-143
		3542S	★**3149**
			3357-144
	SiliconG	SG3542	3401-54
3543	Exar	XR3543	3401-90
	SiliconG	SG3543	3401-95
			¶ 426.9
	Unitrode	**UC3543**	★**3740**
			3401-108
3544	RIFA	PBD3544	2894-28
	SiliconG	SG3544	3401-96
	Unitrode	**UC3544**	★**3740**
			3401-109
3546	Harris	HS3546RH	3346-153
3549	SiliconG	SG3549	3398-118
355	LinearTech	LF355A	3346-90
	MicroPwr	**MP355A**	★**3607**
			3346-142
	Motorola	**LF355**	★**3616**
			3357-17
		LF355B	★**3616**
			3351-48
	National	LF355	3357-18
		LF355A	3345-41
		LF355B	3351-51
	TeledyneS	355A/C	853-6
			3383-52
		355B/M	3383-53
3550	AMD	AMMPA3550	4462-2
	Burr-Brown	**3550J**	★**3150**
			3356-59
		3550K	★**3150**
			3331-55
			3344-3
		3550S	★**3150**
			3344-2
3551	**Burr-Brown**	**3551J**	★**3150**
			3360-3
			3331-44
			3334-221
			3344-28
		3551S	★**3150**
			3360-4
			3331-45
			3334-222
			3344-29
	RIFA	PBD3551	3382-87
	SiliconG	SG3551	2899-21
3553	**Burr-Brown**	**3553**	★**3150**
			3306-35
			3329-17
			3348-81
			3330-97
	Maxim	BB3553	3306-36
			3329-18
			3348-84
			3330-100
3554	**AD**	**AD3554**	★**3508**
			3331-14
			3334-248
		AD3554A	★**3508**
			3348-93
			3330-109
			3345-51
		AD3554B	★**3508**
			3344-19
		AD3554S	★**3508**
			3348-94
			3331-15
			3330-110
			3334-249
			3344-20
	Burr-Brown	**3554**	★**3150**
			3331-16
		3554A	★**3150**
			3330-113
			3334-230
			3346-23
		3554B	★**3150**
			3330-114
			3334-231
			3344-22
		3554S	★**3150**
			3330-115
			3334-232
			3344-23
	TeledyneP	TP3554	3330-119
		TP3554-HR	3346-22
3556	Motorola	MC3556	3383-81
3558	**Motorola**	**MC3558**	★**3617**
			3365-45
356	**Burr-Brown**	**OPA356A**	★**3149**
			★**3150**
			3345-48
	HybridSys	DAC356B-12	2865-55
		DAC356C-12	2865-56
		DAC356LPB-12	2866-1
		DAC356LPC-12	2866-2
	LinearTech	LF356A	3346-92
			(Continued)
356	**MicroPwr**	**MP356A**	★**3607**
			3346-143
	Motorola	**LF356**	★**3616**
			3357-19
		LF356B	★**3616**
			3352-2
	National	LF356	3357-20
		LF356A	3345-44
		LF356B	3352-5
	NEC	μPC356	3352-22
	SGS	LS356	3381-43
3560	Signetics	TDA3560	3325-17
	Telefunken	TDA3560A	3325-37
3561	Signetics	TDA3561	3325-18
3562	**Signetics**	**TDA3562**	★**3731**
			3325-19
	Telefunken	TDA3562A	3325-38
3563	**Signetics**	**TDA3563**	★**3718**
			★**3731**
			3325-20
3564	Fairchild	F3564-25	3850-104
		F3564-35	3851-54
	Signetics	**TDA3564**	★**3731**
			3327-73
3565	Fairchild	F3565-25	3850-120
		F3565-35	3851-55
3566	Fairchild	F3566-25	3851-10
		F3566-35	3851-64
3568	Fairchild	F3568-25	3851-11
		F3568-35	3851-65
	Signetics	**TDA3568**	★**3731**
3569	Fairchild	F3569-25	3851-12
		F3569-35	3851-66
357	**MicroPwr**	**MP357A**	★**3607**
			3346-144
	Motorola	**LF357**	★**3616**
			3357-15
		LF357B	★**3616**
			3351-41
	National	LF357	3357-16
		LF357A	3345-36
		LF357B	3351-44
	NEC	μPC357	3352-23
3570	Fairchild	F3570-25	3851-13
		F3570-35	3851-67
3571	**Burr-Brown**	**3571A**	★**3150**
			3330-87
			3331-76
			3346-34
	Motorola	MC3571	3372-10
3572	**Burr-Brown**	**3572A**	★**3150**
			3330-66
			3331-77
			3346-35
3573	**Burr-Brown**	**3573**	★**3150**
			3330-73
			3357-49
3575	Motorola	MC3575	3334-71
358	**Goldstar**	**GL358**	★**3580**
			3334-129
	MicroPwr	**MP358**	★**3605**
			3309-157
	Motorola	**LM358**	★**3617**
			3334-117
			3366-53
	National	LM358	3334-132
		LM358A	3334-121
			3363-61
	NEC	μPC358	3367-54
	RCA	**CA358**	★**3672**
			3334-133
		CA358A	★**3672**
			3363-62
	Samsung	**LM358A**	★**3679**
			3363-60
	SGS	LM358	3363-63
		LM358A	3363-64
	Signetics	**LM358**	★**3722**
			★**3729**
			3334-134
	ThomsonCSF	LM358	3367-55
3580	**Burr-Brown**	**3580J**	★**3149**
			3330-124
			3331-91
			3357-6

¶ Indicates page number in Application Note Directory.
★ Indicates additional data is provided on the page noted.

Base Number	Source	Device	Page-Line
3581	Burr-Brown	3581J	3330-138
			3331-67
			3346-161
3582	Burr-Brown	3582J	3331-63
			3346-160
3583	**Burr-Brown**	**3583**	★**3149**
			3330-120
			3331-64
			3346-162
3584	**Burr-Brown**	**3584**	★**3149**
			3331-65
			3346-163
359	National	LM359	3357-184
	Siemens	S359	3382-92
35L12	**Raytheon**	**CGA35L12**	★ **701**
			4454-7
35LS190			
	AMD	AM35LS190M	861-167
360	Amperex	OM360	3325-155
	Calmos	CA360	4441-5
	Cybernetic	CY360	3399-112
			1467-92
			1469-120
	DDC	HSDC-360	3403-107
	MicroPwr	**MP360**	★**3605**
			3309-117
	Motorola	**MVME360**	★**2111**
	National	LM360	3313-3
	Plessey	SL360	3309-122
3600	**CalDevices**	**CHA3600**	★**4610**
			4440-36
		DLM3600	★**4605**
			4440-37
	Cherry	CS3600	4462-18
	GI	AY5-3600	¶ 399-15
			¶ 400-4
	LSIComp	D3600	834-106
	RCA	**CA3600**	★**3678**
			3311-39
	SMC	KR3600	2880-17
			¶ 363-11
		KR3600-PRO	2880-15
36000	Mostek	MK36000-4	3850-107
		MK36000-5	3851-25
		MKB36000-83	3850-108
		MKB36000-84	3851-26
	SGS	M36000	3850-113
3603	National	DS3603	2886-33
			2899-20
3604	Harris	HS3604	3321-50
	National	DS3604	2886-16
			2899-18
	Sprague	UGN-3604M	3399-122
3605	National	DS3605	2899-30
	Sprague	UGN-3605M	3399-123
3606	**Burr-Brown**	**3606**	★**3150**
			3307-99
	National	DS3606	2899-31
3607	National	DS3607	2899-32
3608	National	DS3608	2899-33
360A1	Vatic	M360A1	4457-38
361	Amperex	OM361	3325-156
	MicroPwr	**MP361**	★**3605**
			3309-118
	National	FOR361B	¶ 410-12
		LM361	3312-58
	TeledyneS	361A/C	852-105
		361B/M	852-106
3610	**Unitrode**	**UC3610**	★**3741**
			3400-101
3611	National	DS3611	2897-21
	Sprague	**UDN-3611M**	★**3269**
			2897-22
		UDS-3611H	2897-24
3612	National	DS3612	2897-62
	Sprague	**UDN-3612M**	★**3269**
			2897-63
		UDS-3612H	2897-65
3613	National	DS3613	2897-123
	Sprague	**UDN-3613M**	★**3269**
			2897-124
		UDS-3613H	2897-126
3614	National	DS3614	2897-93
	Sprague	**UDN-3614M**	★**3269**
			2897-94
		UDS-3614H	2897-96
36143	National	DS36143	2892-128
36144	National	DS36144	2893-3
36149	National	DS36149	864-117
			2893-13
3615	National	DS3615	2892-7
3616	National	DS3616	2892-1
3617	National	DS3617	2892-12
36179	National	DS36179	864-118
			2893-14
3618	National	DS3618	2892-8
362	**AD**	**AD362K**	★**3142**
			3399-40
		AD362S	★**3142**
			3399-41
	AnalogSys	MA362	3357-182
	HybridSys	HS362	3399-39
	MicroPwr	**MP362**	★**3605**
			3309-119
	Plessey	SL362	3309-123
			¶ 410-8
	TeledyneS	362A/C	852-109
		362B/M	852-110
3620	**Unitrode**	**UC3620**	★**3741**
			2895-118
3626	**Burr-Brown**	**3626A**	★**3150**
			3306-91
		3626B	★**3150**
			3306-92
		3626C	★**3150**
			3306-93
3627	**Burr-Brown**	**3627**	★**3150**
			3306-128
	SiliconG	SG3627	2894-33
3628	National	DS3628	2893-39
3629	**Burr-Brown**	**3629**	★**3150**
			3306-94
		3629A	★**3150**
			3337-1
		3629B	★**3150**
			3335-49
		3629C	★**3150**
			3335-50
		3629S	★**3150**
			3335-51
	National	DS3629	2892-38
	SiliconG	SG3629	2828-104
			2895-57
			3399-79
363	AD	AD363K	3399-5
		AD363S	3399-6
	CTI	MA363	843-65
	National	LM363	3306-84
			3340-39
		LM363A	3306-85
			3337-41
	TeledyneS	363A/C	853-3
		363B/M	853-4
3630	Burr-Brown	3630A	3306-95
		3630B	3306-96
		3630C	3306-97
		3630S	3306-98
	National	DS3630	808-154
3631	National	DS3631	2897-18
3632	Intel	3632	3820-40
		3632-1	3820-36
		M3632	3820-42
			3820-43
	National	DS3632	2897-56
3633	National	DS3633	2897-120
3634	National	DS3634	2897-89
3635	SiliconG	SG3635	2895-110
3636	Intel	3636B	3819-14
		3636B-1	3818-95
		3636B-2	3818-115
	SiliconG	SG3636	2896-113
3637	SiliconG	SG3637	2894-45
	Unitrode	**UC3637**	★**3741**
			2896-16
			¶ 399-11
3638	SiliconG	SG3638	2894-36
		SG3638A	2894-37
3639	SiliconG	SG3639	2894-38
		SG3639A	2894-39
364	AD	AD364J	3399-7
		AD364K	3399-8
		AD364S	3399-9
			(Continued)
364	AD	AD364T	3399-10
	CTI	MA364	843-2
3640	SiliconG	SG3640	2894-21
3641	SiliconG	SG3641	2894-22
3643	SiliconG	SG3643	2894-40
		SG3643A	2894-41
3645	National	DS3645	2893-22
3647	National	DS3647	2892-131
3648	National	DS3648	2892-134
3649	National	DS3649	2893-19
365	**AD**	**AD365**	★**3141**
			★**3143**
			3306-48
	MCE	MCETCA365	3330-62
	National	LP365	3401-138
	Raytheon	**LP365**	★**3667**
			3316-37
		LP365A	★**3667**
			3315-54
3650	**Burr-Brown**	**3650HG**	★**3151**
			3306-133
	National	DS3650	2887-17
	Signetics	TDA3650	3326-151
3651	National	DS3651	2899-28
	Signetics	**TDA3651**	★**3719**
			★**3732**
			3326-152
		TDA3651A	★**3719**
			★**3732**
			3326-153
3652	**Burr-Brown**	**3652HG**	★**3151**
			3306-134
	National	DS3652	2887-20
	Signetics	**TDA3652**	★**3732**
			3326-154
3653	National	DS3653	2899-29
	Signetics	**TDA3653**	★**3719**
			★**3732**
			3326-155
3654	National	DS3654	2896-44
	Signetics	**TDA3654**	★**3732**
3656	**Burr-Brown**	**3656AG**	★**3151**
			3306-138
	National	DS3656	2898-48
			3319-147
3658	National	DS3658	2898-52
3660	Burr-Brown	3660	¶ 404-9
	MicroNet	**MN3660**	★**3204**
			2865-35
3662	National	DS3662	2888-28
3666	National	DS3666	2889-48
3667	National	DS3667	2890-67
3668	National	DS3668	2898-51
3669	National	DS3669	2898-53
367	AnalogSys	MA367	3357-181
	CTI	MA367	3377-56
	TeledyneS	367A	2885-42
		367A/C	853-9
		367B	2885-46
		367B/M	853-10
		367C	2885-47
		367M	2885-43
3671	National	DS3671	2874-32
3674	National	DS3674	2893-4
3675	National	DS3675	2893-23
3678	National	DS3678	2892-135
3679	National	DS3679	2893-20
368	National	LM368-10	3403-50
		LM368-5	3402-119
		LM368-6	3402-138
	TeledyneS	368A	2885-44
		368A/C	853-11
		368C	2885-45
3680	**Fairchild**	**µA3680**	★**3577**
			3380-111
		µA3680C	★**3577**
			3380-121
	National	DS3680	2898-63
			3381-12
3681	Sharp	LR3681	3319-94
3686	National	DS3686	2896-96
			3381-5
3687	National	DS3687	2896-97
			3381-6
3689	National	DS3689	2887-48
369	**AD**	**AD369K**	★**3142**
			3399-42
		AD369S	★**3142**
			3399-43
3690	National	DS3690	2887-49
3691	National	DS3691	2881-35
3692	National	DS3692	2884-12
3695	National	DS3695	2891-15
3696	National	DS3696	2891-16
3697	National	DS3697	2891-17
3698	National	DS3698	2891-18
37	AD	AD-OP37B	3338-16
		ADOP-37A	★**3506**
			3337-4
		ADOP-37C	★**3506**
			3339-27
		ADOP-37E	★**3506**
			3337-5
		ADOP-37F	★**3506**
			3338-17
		ADOP-37G	★**3506**
			3339-28
	Burr-Brown	**OPA37A**	★**3149**
			3341-18
			3337-23
		OPA37B	★**3149**
			3338-18
		OPA37C	★**3149**
			3339-42
		OPA37E	★**3149**
			3341-19
			3337-24
		OPA37F	★**3149**
			3338-19
		OPA37G	★**3149**
			3339-43
	Harris	HA-OP37A	3337-6
		HA-OP37B	3338-20
		HA-OP37C	3339-29
		HA-OP37E	3337-7
		HA-OP37F	3338-21
		HA-OP37G	3339-30
	LinearTech	OP-37A	3341-35
		OP-37C	3339-44
		OP-37E	3341-36
		OP-37G	3339-45
	MicroPwr	**MPOP-37**	★ **688**
			★**3607**
			3339-16
		MPOP-37A	★ **688**
			★**3607**
			3337-25
		MPOP-37B	★ **688**
			★**3607**
			3338-22
		MPOP-37C	★ **688**
			★**3607**
			3339-46
		MPOP-37E	★ **688**
			★**3607**
			3337-26
		MPOP-37F	★ **688**
			★**3607**
			3338-23
		MPOP-37G	★ **688**
			★**3607**
			3339-47
	Motorola	**OP-37A**	★**3616**
			3341-39
		OP-37B	★**3616**
			3338-24
		OP-37C	★**3616**
			3339-48
		OP-37E	★**3616**
			3341-40
		OP-37F	★**3616**
			3338-25
		OP-37G	★**3616**
			3339-14
	PMI	**OP-37A**	★**3636**
			★**3639**
			3337-8
		OP-37B	★**3636**
			★**3639**
			3338-26
		OP-37C	★**3636**
			(Continued)

Arranged alphanumerically from left to right.

PART NUMBER INDEX

Base Number	Source	Device	Page-Line
37	**PMI**	**OP-37C**	★ **3639**
			3339-31
		OP-37E	★ **3636**
			★ **3639**
			3337-9
		OP-37F	★ **3636**
			★ **3639**
			3338-27
		OP-37G	★ **3636**
			★ **3639**
			3339-32
	Raytheon	**OP-37A**	★ **3666**
			3337-2
		OP-37B	★ **3666**
			3338-30
		OP-37C	★ **3666**
			3339-17
		OP-37E	★ **3666**
			3337-3
		OP-37F	★ **3666**
			3338-31
		OP-37G	★ **3666**
			3339-18
370	Amperex	OM370	3325-157
	HiLevel	DS370	1815-4
	HybridSys	DAC370B-16	2871-25
		DAC370B-18	2873-20
		DAC370C-16	2871-26
		DAC370C-18	2873-21
	MicroNet	**MN370**	★ **3204**
			2866-5
		MN370H	★ **3204**
			2866-6
	MicroPwr	**MP370B-18**	★ **3206**
			2873-22
		MP370C-18	★ **3206**
			2873-23
	Motorola	**MVME370**	★ **2111**
	National	COP370	1451-48
	TeledyneS	370A/C	852-40
		370B/M	852-41
3700	Holt	HI3700	4463-13
	Plessey	CLA3700	4453-43
	SiliconG	SG3700	2894-35
37000	Mostek	MK37000-4	3850-123
		MK37000-5	3850-124
		MKB37000-84	3850-109
		MKB37000-85	3851-27
	SGS	M37000	3851-46
3701	National	ADD3701	2848-54
	Sprague	ULN-3701Z	3318-12
			¶ 398-10
	Toko	KM3701	1458-9
3702	National	LX3702	¶ 421-14
	Sharp	IR3702	3373-6
	Sprague	ULN-3702Z	3318-13
	Toko	KM3702	1468-45
3703	Sprague	ULN-3703Z	3318-14
3704	**Unitrode**	**UC3704**	★ **3740**
			3398-94
3705	National	AM3705	2830-197
			2830-198
	Siliconix	**SI3705**	★ **3226**
	Sprague	ULN-3705M	3318-72
3706	**Unitrode**	**UC3706**	★ **3740**
			★ **3741**
			3405-147
3707	**Unitrode**	**UC3707**	★ **3740**
			★ **3741**
			3399-76
3708	Fairchild	3708	2830-199
371	AD	AD371J	2865-52
		AD371K	2867-37
		AD371S	2867-38
	MicroNet	MN371	2865-50
		MN371H	2865-51
	TeledyneS	371A/C	852-21
		371B/M	852-22
3711	National	ADC3711	2848-53
			¶ 387-16
			¶ 421-6
3712	Burr-Brown	3712R	¶ 396-3
		3712T/R	3399-83
	Fujitsu	**MB3712**	★ **1611**
3713	Burr-Brown	3713T	¶ 396-3
		3713T/R	3399-84
	Fujitsu	**MB3713**	★ **1611**
3714	Burr-Brown	3714T	3399-85
			¶ 395-13
	Fujitsu	**MB3714**	★ **1611**
3716	OKI	MSM3716-3	3826-75
3717	Intech	PBL 3717	¶ 397-16
	Plessey	TDA3717	2896-27
	RIFA	PBL3717	2896-25
	SGS	PBL3717A	3400-111
	ThomsonCSF	TEA3717	2896-31
	Unitrode	**UC3717**	★ **3741**
			2896-20
372	**Motorola**	**MVME372**	★ **2111**
	TeledyneS	372A/C	852-17
		372B/M	852-18
	TI	**TLC372M**	★ **719**
			3315-11
	Universal	USLC372	3315-12
3720	Fujitsu	MB3720	3318-89
3721	RIFA	PBL3721	3307-50
3724	Fairchild	FQ3724	3310-34
	Sprague	TPQ3724	3310-51
3725	Fairchild	FQ3725	3310-35
	Motorola	MPQ3725	3310-41
		MPQ3725A	3310-42
	National	DH3725C	3310-45
	Sprague	TPQ3725	3310-52
		TPQ3725A	3310-53
37256	OKI	MSM37256-15	3829-50
		MSM37256-20	3829-72
3726	RIFA	PBL3726-X	3381-37
373	**MicroNet**	**MN373**	★ **3205**
			3405-3
	TeledyneS	373A/C	852-23
		373B/M	852-24
3730	**Fujitsu**	**MB3730**	★ **1611**
			3318-90
3731	**Fujitsu**	**MB3731**	★ **1611**
			3318-91
	SiliconG	SG3731	2896-10
			¶ 420-13
3732	OKI	MSM3732-15	3827-4
		MSM3732-20	3827-5
374	MicroNet	MN374	3405-4
	TeledyneS	374A/C	852-19
	TI	**TLC374M**	★ **719**
			3316-49
	Universal	USLC374	3316-50
3741	Sharp	IR3741	3353-33
3747	RIFA	PBL3747	3307-57
374HCT283			
	Goldstar	**G374HCT283**	★ **116**
			★ **166**
375	**MicroNet**	**MN375A**	★ **3205**
			3404-44
	TeledyneS	375A/C	852-102
			3854-28
		375B/M	852-103
			3854-29
3750	Sprague	ULN-3750B	3318-191
3751	Sprague	ULN-3751	¶ 406-19
		ULN-3751B	★ **3269**
			3357-84
		ULN-3751Z	★ **3269**
			3357-83
3752	DataTrans	DT3752	2035-11
	Fujitsu	**MB3752**	★ **1611**
3753	Sprague	3753	¶ 406-19
3754	DataTrans	DT3754	2011-12
			2035-30
3755	DataTrans	DT3755	2035-29
	Sprague	3755	¶ 406-19
		ULN-3755	★ **3269**
			3368-30
3759	**Fujitsu**	**MB3759**	★ **1611**
			3395-110
376	**AD**	**AD376J**	★ **3116**
			★ **3131**
			2847-23
		AD376K	★ **3116**
			★ **3131**
			2847-10
	Fairchild	µA376C	3394-3
	MicroNet	**MN376**	★ **3205**
			(Continued)
376	MicroNet	MN376	3405-5
	National	LM376	3394-4
	Universal	USLC376	3316-51
3760	**Fujitsu**	**MB3760**	★ **1611**
			3395-111
3762	DataTrans	DT3762	2036-14
3764	**OKI**	**MSM3764-12**	★ **4732**
			3827-36
		MSM3764-15	★ **4732**
			3827-63
		MSM3764-20	★ **4732**
			3827-84
377	HybridSys	DAC377-18	2873-24
		DAC377B-18	2873-25
		DAC377C-18	2873-26
	MicroNet	MN377	3405-6
	MicroPwr	**MP377B-18**	★ **3206**
			2873-27
		MP377C-18	★ **3206**
			2873-28
	National	LM377	3318-184
3770	**LSILogic**	**LL3770**	★ **4676**
	RIFA	PBL3770	2896-30
	Unitrode	**UC3770**	★ **3741**
			3400-112
3772	DataTrans	DT3772	2035-58
3774	DataTrans	DT3774	2035-67
3775	DataTrans	DT3775	2035-64
3776	DataTrans	DT3776	2035-33
378	National	LM378	3318-185
3780	RIFA	PBL3780	3379-37
		PBL 3780	¶ 412-14
3781	RIFA	PBL3781	3381-38
3783	Sprague	ULN-3783M	3318-192
3784	Sprague	ULN-3784B	3318-15
379	**MicroNet**	**MN379**	★ **3205**
			3405-7
	National	LM379	3318-152
	NEC	µPD379	2901-37
37C73	VTI	VL37C73	1467-48
37C77	VTI	VL37C77	1467-49
37S64	**OKI**	**MSM37S64A-15**	
			★ **4732**
			3828-60
38	Exar	XR-38XX	1813-10
		XR38XX	2013-14
	Wintek	**MCH38**	★ **2118**
			2005-34
380	**AD**	**AD380J**	★ **3508**
			3334-199
		AD380K	★ **3508**
			3334-200
			3344-40
		AD380L	★ **3508**
			3334-201
			3344-41
		AD380S	★ **3508**
			3348-109
			3360-8
			3330-125
			3331-49
			3334-202
			3344-42
	National	LM380	3318-36
	TeledyneS	380A/C	852-35
			2876-18
		380B/M	852-27
			2876-19
3800	Lambda	LAS3800	3395-149
38000	Mostek	MK38000-20	3852-100
		MK38000-25	3852-130
		MKB38000-84	3852-131
		MKB38000-85	3853-14
3801	Mostek	MK3801-6	1468-44
3802	Intech	VFC3802	3405-71
3803	Sprague	ULN-3803A	3321-100
3805	Intech	VFC3805	3405-72
	Mostek	MK3805	¶ 370-5
			¶ 438-10
3806	**Signetics**	**TDA3806**	★ **3727**
			★ **3731**
3807	Mostek	MK3807	1453-25
			¶ 370-5
			¶ 383-9
	Signetics	**TDA3807**	★ **3727**
			★ **3731**
3809	Sprague	ULN-3809A	3322-139
381	**AD**	**AD381J**	★ **3508**
			3344-18
		AD381K	★ **3508**
			3342-7
		AD381L	★ **3508**
			3340-63
		AD381S	★ **3508**
			3344-10
	Harris	HI381	2822-43
	National	LM381	3319-46
	Siliconix	**DG381AA**	★ **3223**
			2822-50
		DG381AB	★ **3223**
			2822-51
		DG381AC	★ **3223**
			2822-52
	TeledyneS	381A/C	852-25
			2876-20
		381B/M	852-26
			2876-21
3810	Intech	VFC3810	3405-73
	Signetics	**TDA3810**	★ **3727**
			3326-68
3812	Sprague	ULN-3812A	3322-140
38128	**OKI**	**MSM38128**	★ **4733**
			3852-61
		MSM38128A	★ **4733**
			3852-30
3819	Harris	HS3819	3327-109
			1466-24
382	**AD**	**AD382J**	★ **3508**
			3344-17
		AD382K	★ **3508**
			3342-6
		AD382S	★ **3508**
			3348-110
			3330-126
			3344-9
	National	LM382	3319-47
	TeledyneS	382A/C	852-29
			2876-25
		382B/M	852-30
			2876-26
3820	Lambda	LAS3820	3395-150
	National	LM3820	3321-45
	Signetics	TDA3820	3316-125
	Sprague	ULN-3820A	3321-49
3821	SiliconG	SG3821	3309-35
3823	Sprague	ULN-3823A	3322-141
3825	**Unitrode**	**UC3825**	★ **3739**
			3398-124
38256	GouldAMI	S38256B	3852-128
	OKI	**MSM38256**	★ **4733**
			3853-5
		MSM38256A	★ **4733**
			3852-107
383	National	LM383	3316-198
		LM383A	3316-199
	TeledyneS	383A/C	852-31
			2875-121
		383B/M	852-32
			2875-122
3834	**Unitrode**	**UC3834**	★ **3740**
			3401-117
3838	Sprague	ULN-3838A	3321-40
3839	Sprague	ULN-3839A	3321-41
384	Harris	HI384	2826-110
		HS384RH	★ **674**
			2827-105
	National	LM384	3316-200
	Siliconix	**DG384AA**	★ **3223**
			2826-82
		DG384AB	★ **3223**
			2826-83
		DG384AC	★ **3223**
			2826-84
3840	Lambda	LAS3840	3395-151
			¶ 401-6
			¶ 425-2
			¶ 425-13
	SGS	UC3840	3396-66
	SiliconG	SG3840	3401-143
	Unitrode	**UC3840**	★ **3739**
			3397-67

¶ Indicates page number in Application Note Directory.
★ Indicates additional data is provided on the page noted.

Base Number	Source	Device	Page-Line
3842	Cherry	CS3842A	3398-125
	IPS	**IP3842**	**★3599**
			3395-139
	Unitrode	**UC3842**	**★3739**
			3398-136
			¶ 426-11
3843	**IPS**	**IP3843**	**★3599**
			3395-140
	Unitrode	**UC3843**	**★3739**
			3398-137
3844	Cherry	CS3844A	3395-80
3846	Fairchild	F3846	2901-35
	LinearTech	UC3846	3396-9
	RIFA	RL3846	3396-56
	Unitrode	**UC3846**	**★3739**
			3398-138
3847	LinearTech	UC3847	3396-10
	Unitrode	**UC3847**	**★3739**
			3398-139
385	LinearTech	LM385-1	3402-5
		LM385-2	3402-47
	Motorola	**LM385-1**	**★3628**
			3402-9
		LM385-2	**★3628**
			3402-54
		LM385B-1	**★3628**
			3402-10
		LM385B-2	**★3628**
			3402-55
	National	LM385	3402-13
		LM385-1	3402-28
		LM385-2	3402-69
3850	**MicroNet**	**MN3850**	**★3204**
			2865-19
		MN3850H	**★3204**
			2865-20
	Mostek	MK3850	1460-3
			1421-39
3851	Mostek	MK3851	1460-8
	SiliconG	SG3851	2894-111
			3310-129
38510	Hitachi	HD38510	3320-3
	Motorola	**MIL-M-38510**	**★ 696**
	PMI	**M38510**	**★3640**
	RCA	**MIL-M-38510**	**★ 704**
38513	Hitachi	HD38513	3320-4
3852	Mostek	MK3852	1460-6
	SiliconG	SG3852	2894-129
			3310-130
38520	**MMI**	**JM38520**	**★ 692**
3853	Mostek	MK3853	1460-9
	SiliconG	SG3853	2894-87
			3310-131
3854	Mostek	MK3854	1460-5
38546	Hitachi	HD38546	3320-5
38550	Hitachi	HD38550	3320-6
38560	Hitachi	HD38560	3320-7
38570	Hitachi	HD38570	3320-8
38580	Hitachi	HD38580	3320-9
38585	Hitachi	HD38585	3320-10
3859	Sprague	ULN-3859A	3322-53
386	National	LM386	3318-37
3860	AD	AD3860K	2865-24
		AD3860S	2865-25
	HybridSys	HS3860B	2865-13
		HS3860C	2865-14
	MicroNet	**MN3860**	**★3204**
			2865-21
		MN3860H	**★3204**
			2865-22
3861	Mostek	MK3861	1460-7
3862	Sprague	ULN-3862A	3322-54
3864	**OKI**	**MSM3864**	**★4733**
			3850-80
387	Harris	HI387	2824-142
	National	LM387	3319-48
	SGS	L387	3319-58
	Siliconix	**DG387AA**	**★3223**
			2824-149
		DG387AB	**★3223**
			2824-150
		DG387AC	**★3223**
			2824-151
3870	Aptek	AMS3870	3382-3
	Exar	XR-3870	1411-29
		XR3870	1453-15
			(Continued)
3870	Exar	XR3870	1411-33
	Fairchild	F3870	¶ 363-14
		F3870-PEP	2023-16
	Mostek	MK3870	1423-1
		MK3870/10	1453-17
		MK3870/12	1453-8
		MK3870/20	1453-18
		MK3870/22	1453-9
		MK3870/30	1453-19
		MK3870/32	1453-10
		MK3870/40	1453-20
		MK3870/42	1453-11
	Motorola	MC3870	1453-12
			1423-12
	SGS	M3870	1453-21
	Telefunken	U3870	1453-23
			¶ 420-4
3872	Exar	XR-3872	1411-30
		XR3872	1453-5
			1417-1
	Fairchild	F3872	1453-6
	SGS	M3872	1453-13
3873	Mostek	MK3873	1423-2
388	National	LM388	3318-38
	SGS	LS388	3381-39
3880	Mostek	MK3880	1423-3
		MK3880-6	1460-63
		MKB3880-80	1460-64
		MKB3880-84	1460-65
3881	Mostek	MK3881	1460-120
		MKB3881-80	1460-121
		MKB3881-84	1460-122
3882	Mostek	MK3882	1460-89
		MKB3882-80	1460-90
		MKB3882-84	1460-91
3883	Mostek	MK3883	1460-108
3884	Mostek	MK3884	1460-134
			¶ 370-10
			¶ 377-14
3885	KineticSys	3885-Z1C	2005-37
	Mostek	MK3885	1460-135
			¶ 370-10
3887	Mostek	MK3887	1460-136
			¶ 370-10
389	**AD**	**AD389**	**★3139**
			3404-165
	National	LM389	3306-19
			3318-39
			¶ 416-3
38980	Hitachi	HD38980	3320-48
38991	Hitachi	HD38991C	3320-49
38C70	Exar	XR-38C70	1411-31
38E70	Exar	XR-38E70	1411-32
		XR38E70	1453-1
			1453-16
			1417-2
38L030	**TI**	**TBP38L030**	**★4243**
			3814-12
38L16	**TI**	**TBP38L16**	**★4247**
38L165	**TI**	**TBP38L165-35**	**★ 729**
			★4247
			3819-96
		TBP38L165-45	**★ 729**
			★4247
			3819-98
38L166	**TI**	**TBP38L166**	**★4247**
			3818-99
38L22	TI	TBP38L22-35	3815-1
38L42	**TI**	**TBP38L42**	**★4259**
			3815-78
38L72	Fairchild	F38L72	1453-7
38L8	**TI**	**TBP38L8**	**★4242**
			3817-55
38L85	TI	TBP38L85	3817-56
38P70	Exar	XR38P70	1453-2
	Fairchild	MK38P70	¶ 366-16
	Mostek	MK38P70	1453-3
		MK38P70/02	1453-4
38R16	**TI**	**TBP38R16X**	**★4249**
			3818-59
38R165	TI	TBP38R165	3818-58
		TBP38R165-18	3819-94
		TBP38R165-20	3819-95
38S03	TI	38S03X-30	3814-27
		TBP38S03X-25	**★4243**
			3814-23
38S030	**TI**	**TBP38S030-15**	**★ 729**
			3814-10
		TBP38S030-25	**★ 729**
			3814-22
		TBP38S030-30	**★ 729**
			3814-28
38S16	**TI**	**TBP38S16X-25**	**★4252**
			3818-78
		TBP38S16X-30	**★4252**
			3818-71
38S165	**TI**	**TBP38S165-25**	**★ 729**
			3818-76
		TBP38S165-30	**★ 729**
			3818-80
		TBP38S165-35	**★ 729**
			3819-97
38S166	TI	TBP38S166	3818-62
		TBP38S166-25	3818-77
		TBP38S166-30	3818-79
38S2	**TI**	**TBP38S2X-18**	**★4256**
			3815-3
		TBP38S2X-25	**★4256**
			3815-4
38S22	**TI**	**TBP38S22-18**	**★4256**
			3815-2
38S42	**TI**	**TBP38S42**	**★4259**
			3815-71
38S8	**TI**	**TBP38S8**	**★4242**
			3817-57
38S85	TI	TBP38S85	3817-58
38SA030	**TI**	**TBP38SA030-25**	
			★4243
			3814-11
38SA16	**TI**	**TBP38SA16X**	**★4254**
			3818-70
38SA165	**TI**	**TBP38SA165**	**★4254**
			3818-68
38SA166	**TI**	**TBP38SA166**	**★4254**
			3818-69
38SA2	**TI**	**TBP38SA2**	**★4256**
38SA22	**TI**	**TBP38SA22-25**	**★4256**
			3819-99
38SA42	**TI**	**TBP38SA42**	**★4259**
			3815-73
38SA8	**TI**	**TBP38SA8**	**★4242**
			3817-46
38SA85	TI	TBP38SA85	3817-47
38SH72	SGS	M38SH72	1453-14
38S030	**TI**	**TBP38S030**	**★4243**
39	Lambda	LAS39U	3392-99
	Wintek	**MRR39**	**★2118**
			2037-33
390	**AD**	**AD390J**	**★3102**
			★3111
			2866-8
		AD390K	**★3102**
			★3111
			2865-27
		AD390S	**★3102**
			★3111
			2866-9
		AD390T	**★3102**
			★3111
			2866-10
	Harris	HI390	2825-72
		HS390RH	**★ 674**
			2827-111
	MicroNet	MN390	2869-42
	Motorola	**MVME390**	**★2111**
	National	LM390	3318-40
	Siliconix	**DG390AA**	**★3223**
			2825-81
		DG390AB	**★3223**
			2825-82
		DG390AC	**★3223**
			2825-83
	TeledyneS	390	852-52
		390A/C	2897-138
3900	**Fujitsu**	**C3900AV**	**★4624**
			4445-5
		C3900H	**★4624**
			4444-38
		C3900VH	**★4624**
			(Continued)
3900	Fujitsu	C3900VH	4445-6
	Motorola	**LM3900**	**★3618**
			3334-190
	National	LM3900	3334-192
	Plessey	CLA3900	4453-47
	Raytheon	LM3900	3334-194
	TI	TAC3900H	4456-19
3901	**Mostek**	**MK3901**	**★4116**
			3853-69
	Unitrode	**UC3901**	**★3740**
			3401-110
3903	Unitrode	UC3903	3401-111
3905	Lambda	LAS3905	3385-62
			¶ 427-12
		LAS3905K	3385-63
	National	LM3905	3383-13
3909	National	LM3909	2875-16
			3399-92
391	HybridSys	DAC391B-12	2861-39
		DAC391C-12	2861-40
	National	LM391	3316-185
	TeledyneS	391	852-51
		391A/C	2896-107
3910	RIFA	PBM3910	3381-30
3911	National	LM3911	3404-148
3914	National	LM3914	2874-2
			¶ 399-4
	OKI	MSM3914A	2880-21
3915	National	LM3915	2874-3
3916	National	LM3916	2874-28
392	HybridSys	DAC392B-12	2863-13
		DAC392C-12	2863-14
	National	LM392	3307-64
			3365-43
	TeledyneS	392	852-53
		392A/C	2896-114
393	**Goldstar**	**GL393**	**★3580**
			3313-51
	Motorola	**LM393**	**★3631**
			3314-36
		LM393A	**★3631**
			3313-53
	National	LM393	3314-38
		LM393A	3313-55
	NEC	μPC393	3314-45
	Samsung	**LM393**	**★3679**
			3314-20
		LM393A	**★3679**
			3313-40
	SGS	LM393	3314-40
		LM393A	3313-57
	Signetics	**LM393A**	**★3722**
			3314-43
	TeledyneS	393	852-83
		393A/C	2896-116
	ThomsonCSF	LM393	3314-44
3931	National	LM3931-5	3384-17
394	**AD**	**AD394**	**★3103**
			★3111
	Goldstar	**GL394**	**★3580**
			3316-18
	National	LM394	3309-121
	TeledyneS	394	852-84
		394A/C	2896-115
3941	Motorola	MC3941	2876-73
395	**AD**	**AD395**	**★3103**
			★3111
	National	LM395	3398-92
	TeledyneS	395	852-56
		395A/C	2897-139
	Unitrode	LM395	3309-86
3953	OKI	MSM3953	3379-123
3954	**MicroPwr**	**MP3954**	**★3605**
			3309-134
		MP3954A	**★3605**
			3309-135
3955	**MicroPwr**	**MP3955**	**★3605**
			3309-136
3956	**MicroPwr**	**MP3956**	**★3605**
			3309-137
3958	**MicroPwr**	**MP3958**	**★3605**
			3309-138
396	Micropac	MLM396-05	3385-69
		MLM396-12	3387-99
		MLM396-15	3388-89
			(Continued)

Arranged alphanumerically from left to right.

PART NUMBER INDEX

Base Number	Source	Device	Page-Line
396	National	LM396	3392-101
	TeledyneS	396AC	852-108
397	HybridSys	DAC397B-12	2861-41
		DAC397C-12	2861-42
398	AMD	LF398	3403-151
	LinearTech	LF398	3404-34
		LF398A	3404-35
	National	COP398	1451-44
		LF398	3404-51
		LF398A	3404-52
	NEC	µPC398	3404-60
	Signetics	**LF398**	**★3725**
			3404-77
399	LinearTech	LM399	3402-159
		LM399A	3402-147
	National	COP399	1451-46
		LM399	3402-154
			¶ 429-5
		LM399A	3402-156
			¶ 429-5
3999	National	LM3999	3402-155
	RCA	**CA3999**	**★3216**
			2848-55
39A05	Lambda	LAS39A05	3385-64
		LAS39A05K	3385-65
39C01	**IDT**	**IDT39C01C**	**★1639**
			1448-56
39C02	**IDT**	**IDT39C02A**	**★1641**
			1448-116
39C03	IDT	IDT39C03A	1448-57
39C10	**IDT**	**IDT39C10B**	**★1640**
			1462-95
39C203	IDT	IDT39C203	1448-58
39C60	IDT	IDT39C60A	1462-124
39VP864			
	Raytheon	**39VP864**	**★4137**
			3821-54
39VS864			
	Raytheon	**39VS864**	**★4137**
39VX000			
	Raytheon	**39VX000**	**★4137**
3C01	Sharp	IR3C01	2894-17
3C02	Sharp	IR3C02	2894-18
3D5	Cromemco	CS-3D5E	1811-19
3F01	Sharp	IR3F01	3368-23
3F02	Sharp	IR3F02	3367-39
3G01	Barvon	BC3G01	4462-8
3G02	Barvon	BC3G02	4462-7
3K02	Sharp	IR3K02	2851-41
3K12	Sharp	IR3K12	2867-8
3K16	Sharp	IR3K16A	2872-4
3L06	**Panatech**	**RF3L06**	**★4133**
			3324-58
3M01	Sharp	IR3M01	3396-68
3M02	Sharp	IR3M02	3396-69
3N06	Sharp	IR3N06	3322-52
3N31	Sharp	IR3N31	3381-45
3N33	Sharp	IR3N33	3381-32
3P01	**Panatech**	**RF3P01**	**★4133**
3V20	**Dense-Pac**	**DPD3V20**	**★4008**
			3828-23
32	National	M32CMOS	¶ 443-12
4	**Burr-Brown**	**MPC4D**	**★3149**
			2830-70
	Calay	V04	4909-1
			4991-2
			5042-19
	CharlesRiver	CM-4MB	2043-20
	Chrislin	CI-MIV4	2038-4
	Comark	Disktor M-4	1811-15
	CompVision	CADDS 4X	4977-2
			5045-85
	Cromemco	4PIO	2038-23
	Ferranti	ZNPCM4	3377-73
	Force	CPU-4	2027-16
	GouldAMI	UA-4	4446-12
	Intech	RGBDAC4E	2849-17
		RGBDAC4T	843-135
			2849-3
			1466-37
		RGBDAC4V	2849-18
	Interdesign	ULA4ARA	4442-38
		ULA4ARB	4442-39
		ULA4ARC	4442-40
		ULA4ARD	4442-41
		ULA4G	4463-3
4	Mostek	MDX-CPU4	2021-7
	NEC	µCOM-4	1409-16
	OKI	**SAS-4**	**★4733**
	Plessey	PSM-4VA	2043-27
		PSM-4VP	2043-28
	Sharp	SM4A	1450-80
			1411-30
	STC	MSIV-4	4465-6
	TeledyneC	CDA4A	2824-129
		CLD4	2876-51
	TLSI	TA-4	4456-25
	Torric	UA4	4456-39
	VersaLogic	IPI-4	2040-44
	WinSystems	MCM-SBC4	2017-9
40	IntMicCir	IMC-40A	4463-19
		IMC-40B	4463-25
		IMC-40D	4463-18
	Interdesign	ULA40ARA	4444-23
		ULA40ARB	4444-24
		ULA40ARC	4444-27
		ULA40ARD	4444-28
		ULA40DS	4444-22
		ULA40RA	4444-25
		ULA40RB	4444-26
		ULA40RC	4444-29
		ULA40RD	4444-30
	MCE	MCEA40AS	4464-13
		MCEA40BS	4464-25
		MCEA40D	4464-11
		MCEA40DS	4464-12
		MCEP40A	4464-24
	MicroInds	88/40	2011-24
	NCR	ADP-40	2038-43
	Onset	PAR-40	2030-9
	Rockwell	A65/40-1000	2015-13
400	AnalogSys	MA400	3357-10
	CalDevices	**DLM400**	**★4605**
			4440-21
	Exar	**XR400**	**★4618**
			4462-43
	Motorola	**HDS-400**	**★1905**
			1819-1
		MVME400	**★2112**
			2044-42
	National	LF400	3357-33
	PMI	**OP-400**	**★3636**
	Siliconix	**DG400**	**★3223**
			★3231
	Sprague	UHC/D-400	864-23
			2898-87
		UHP-400	**★3269**
			864-27
			2898-91
	Vatic	**VL400**	**★4804**
			4465-18
4000	Burr-Brown	MS4000	1811-9
	CalDevices	CDI4000	4440-20
	Cherry	CS4000	4462-19
	CompVision	CDS 4000	4912-1
	Fairchild	**FGC4000**	**★4621**
			4442-24
	GouldAMI	**GA4000D**	**★4632**
			4446-21
		GB4000D	**★4632**
			4446-22
	HyComp	DA4000	2868-16
		HC4000	2861-43
		HC4000-883	2861-44
	Matra	MA4000	4450-35
	Mostek	GB4000D	4451-26
		MKGA4000D	**★4715**
			4451-25
		MKGB4000D	**★4716**
			4451-27
	Motorola	MC4000	877-118
	National	CD4000C	826-179
		CD4000M	826-180
	NCM	4000 Series	4480-24
	Plessey	CLA4000	4453-48
	RCA	CD4000 Series	¶ 352-15
			¶ 353-1
			¶ 353-8
			¶ 354-1
			¶ 354-2
			¶ 354-17
4000	RCA	CD4000 Series	¶ 355-10
			¶ 400-14
			¶ 423-5
		CD4000A	**★ 704**
			★1145
			826-181
			¶ 355-6
		CD4000A Series	¶ 354-18
			¶ 355-7
		CD4000AE	**★ 704**
			★1145
			826-182
		CD4000B	**★ 704**
			★1145
			826-183
		CD4000B Series	¶ 355-5
			¶ 355-7
		CD4000BE	**★ 704**
			★1145
			826-184
		CD4000UB	**★ 704**
			★1145
			826-185
		CD4000UB Series	¶ 355-5
		CD4000UBE	**★ 704**
			★1145
			826-186
	SGS	HCC4000B	826-187
		HCF4000B	827-1
	Signetics	HEF4000B	827-2
	Siliconix	VN4000A	¶ 363-12
	Solitron	CM4000A	827-3
		CM4000AE	827-4
	SSS	BCL4000B	827-6
		SCL4000 Series	¶ 353-7
			¶ 354-16
		SCL4000B	827-7
	ThomsonCSF	UAA4000	3323-4
	TLSI	TA-4000D	4456-35
	Torric	GA4000D	4456-45
	Toshiba	**TC4000B**	**★1363**
			827-8
	VTI	**VGC4000**	**★4805**
			4458-13
40000	ZyMOS	Zy40000	4482-30
4000C1	Vatic	M4000C1	4458-3
4000C2	Vatic	M4000C2	4458-4
4001	Fairchild	F4001BC	827-155
		F4001BM	827-156
	Motorola	MC4001	862-83
		MHQ4001A	3310-36
	National	CD4001A	827-161
		CD4001BC	827-162
		CD4001BM	827-163
	NCM	4001Z	3326-6
	Panasonic	MN4001B	827-164
	RCA	CD4001	¶ 352-6
		CD4001A	**★ 704**
			★1145
			827-165
			¶ 355-6
		CD4001AE	**★ 704**
			★1145
			827-166
		CD4001B	**★ 704**
			★1145
			827-167
		CD4001BE	**★ 704**
			★1145
			827-168
		CD4001UB	**★ 704**
			★1145
			827-169
		CD4001UBE	**★ 704**
			★1145
			827-170
	Sanyo	LC4001B	827-171
	SGS	HCC4001B	827-172
		HCF4001B	827-173
	Siemens	TDA4001	3321-36
	Signetics	HEF4001B	827-174
4001	Signetics	HEF4001UB	827-175
	Solitron	CM4001A	827-176
		CM4001AE	827-177
		CM4001B	827-178
		CM4001BE	827-179
	SSS	BCL4001B	827-182
		BCL4001UB	827-183
		SCL4001B	827-184
		SCL4001UB	827-185
	ThomsonCSF	UAA4001	3397-7
			¶ 425-10
			¶ 426-7
	Toshiba	**TC4001B**	**★1363**
			827-186
		TC4001UB	**★1363**
			827-187
40014	Fairchild	F40014AM	839-37
		F40014BC	839-38
4002	Fairchild	F4002BC	827-32
		F4002BM	827-33
	Fujitsu	**C4002AVM**	**★4624**
			4445-7
	Motorola	MHQ4002A	3310-37
	National	CD4002A	827-38
		CD4002BC	827-39
		CD4002BM	827-40
	NCM	4002Z	3325-140
	Panasonic	MN4002B	827-41
	RCA	**CD4002A**	**★ 704**
			★1145
			827-42
		CD4002AE	**★ 704**
			★1145
			827-43
		CD4002B	**★ 704**
			★1145
			827-44
		CD4002BE	**★ 704**
			★1145
			827-45
		CD4002UB	**★ 704**
			★1145
			827-46
		CD4002UBE	**★ 704**
			★1145
			827-47
	SGS	HCC4002B	827-48
		HCF4002B	827-49
	Signetics	HEF4002B	827-50
	Solitron	CM4002A	827-51
		CM4002AE	827-52
	SSS	BCL4002B	827-54
		SCL4002B	827-55
	ThomsonCSF	UAA4002	2894-15
			¶ 425-14
			3399-74
	Toshiba	**TC4002B**	**★1363**
			827-56
4003	Motorola	MPQ4003	3310-43
	NCM	4003Z	3325-142
	ThomsonCSF	UAA4003	3397-8
4004	Motorola	MC4004	876-149
			3831-1
		MPQ4004	3310-44
	NCM	4004Z	3326-112
			3317-4
	ThomsonCSF	UAA4004	2895-82
4005	Motorola	MC4005	876-150
			3831-2
4006	Fairchild	F4006BC	836-177
			3855-55
		F4006BM	836-178
		F4006M	3855-59
	Motorola	MC4006	862-72
	National	CD4006A	836-181
			3855-60
		CD4006BC	836-182
		CD4006BM	836-183
	NCM	4006Z	3325-61
	RCA	**CD4006A**	**★ 704**
			836-184
		CD4006AE	**★ 704**
			836-185
		CD4006B	**★ 704**
			836-186
		CD4006BE	**★ 704**

(Continued)

¶ Indicates page number in Application Note Directory.
★ Indicates additional data is provided on the page noted.

Base Number	Source	Device	Page-Line
4006	RCA	CD4006BE	836-187
			3855-56
	SGS	HCC4006B	836-188
		HCF4006B	836-189
	Signetics	HEF4006B	836-190
	Solitron	CM4006A	836-191
			3855-57
		CM4006AD	836-192
			3855-54
		CM4006AE	836-193
			3855-58
	SSS	BCL4006B	836-195
		SCL4006B	837-1
			3855-62
	ThomsonCSF	UAA4006	3397-9
			¶ 425-3
	Toshiba	**TC4006B**	**★1363**
			837-2
40061	RCA	CD40061	831-121
		CD40061A	831-122
			3832-85
		C040061	3832-88
4007	Fairchild	F4007UBC	810-155
		F4007UBM	810-156
	Motorola	MC4007	863-1
	National	CD4007C	810-159
		CD4007M	810-160
	Panasonic	MN4007UB	810-161
	RCA	**CD4007A**	**★ 704**
			★1145
			810-162
			¶ 389-9
		CD4007AE	**★ 704**
			★1145
			810-163
		CD4007UB	**★ 704**
			★1145
			810-164
		CD4007UBE	**★ 704**
			★1145
			810-165
	SGS	HCC4007UB	810-166
		HCF4007UB	810-167
	Signetics	HEF4007UB	810-168
	Solitron	CM4007A	810-169
		CM4007AE	810-170
	SSS	BCL4007UB	810-172
		SCL4007UB	810-173
	ThomsonCSF	UAA4007	3404-85
	Toshiba	**TC4007UB**	**★1363**
			810-174
4008	Fairchild	F4008BC	806-56
		F4008BM	806-57
	Motorola	MC4008	888-123
	National	CD4008BC	806-60
		CD4008BM	806-61
	RCA	CD4008	¶ 352-6
		CD4008A	**★ 704**
			★1147
			806-62
		CD4008AE	**★ 704**
			★1147
			806-63
		CD4008B	**★ 704**
			★1147
			806-64
		CD4008BE	**★ 704**
			★1147
			806-65
	SGS	HCC4008B	806-66
		HCF4008B	806-67
	Signetics	HEF4008B	806-68
	Solitron	CM4008A	806-69
		CM4008AE	806-70
	SSS	BCL4008B	806-72
		SCL4008B	806-73
	ThomsonCSF	UAA4008	3404-86
	Toshiba	**TC4008B**	**★1363**
			806-74
40085	Fairchild	F40085BC	807-54
		F40085BM	807-55
4009	National	CD4009AC	808-157
		CD4009AM	808-158
	RCA	CD4009	¶ 353-9
		CD4009A	**★ 704**
			★1145
			(Continued)
4009	RCA	CD4009A	808-159
		CD4009AE	**★ 704**
			★1145
			808-160
		CD4009UB	**★ 704**
			★1145
			808-161
		CD4009UBE	**★ 704**
			★1145
			808-162
	Solitron	CM4009A	809-1
		CM4009AE	809-2
	SSS	BCL4009UB	809-4
		SCL4009UB	809-5
	ThomsonCSF	UAA4009	3323-27
	Toshiba	**TC4009UB**	**★1363**
			809-6
40097	Fairchild	F40097BC	809-167
		F40097BM	809-168
	Signetics	HEF40097B	809-176
40098	Fairchild	F40098BC	811-96
		F40098BM	811-97
	Signetics	HEF40098B	811-98
401	Cherry	CS401	3400-73
	Cortex	Cortex401	2037-23
	DY-4	DSTD-401	2040-19
	Fairchild	**F401**	**★1029**
	Intersil	**IH401**	**★3196**
		IT401	¶ 401-7
		IT401A	¶ 401-7
	Motorola	MHW401	3307-106
	National	COP401L	1407-18
		COP401L-R13	1407-19
		COP401L-X13	1407-20
	Siliconix	**DG401**	**★3223**
			★3231
		U401	¶ 406-4
	Telefunken	U401	3324-13
4010	Hughes	HCTR4010	816-11
	Motorola	MC4010	887-96
	National	CD4010A	809-52
	RCA	CD4010	¶ 353-9
		CD4010A	**★ 704**
			★1145
			809-53
		CD4010AE	**★ 704**
			★1145
			809-54
		CD4010B	**★ 704**
			★1145
			809-55
		CD4010BE	**★ 704**
			★1145
			809-56
	Solitron	CM4010A	809-57
		CM4010AE	809-58
	SSS	BCL4010B	809-60
		SCL4010B	809-61
	Toshiba	**TC4010B**	**★1363**
			809-62
40100	RCA	CD40100B	837-5
		CD40100BE	837-6
	SGS	HCC40100B	837-7
		HCF40100B	837-8
40101	**RCA**	**CD40101B**	**★1147**
			808-30
		CD40101BE	**★1147**
			808-31
	SGS	HCC40101B	808-32
		HCF40101B	808-33
40102	**RCA**	**CD40102B**	**★1146**
			815-92
		CD40102BE	**★1146**
			815-93
	SGS	HCC40102B	815-94
		HCF40102B	815-95
	Toshiba	**TC40102B**	**★1363**
			815-96
40103	**RCA**	**CD40103B**	**★1146**
			812-119
		CD40103BE	**★1146**
			812-120
	SGS	HCC40103B	812-121
		HCF40103B	812-122
	Toshiba	**TC40103B**	**★1363**
			812-123
40104	RCA	CD40104B	835-70
	SGS	HCC40104B	835-76
		HCF40104B	835-78
	Toshiba	**TC40104B**	**★1363**
			835-87
40105	**RCA**	**CD40105B**	**★1146**
			831-55
			3809-1
		CD40105BE	**★1146**
			831-56
			3809-2
	SGS	HCC40105B	831-57
		HCF40105B	831-58
40106	National	CD40106BC	839-41
		CD40106BM	839-42
	RCA	**CD40106B**	**★ 704**
			★1145
			839-45
		CD40106BE	**★ 704**
			★1145
			839-46
	SGS	HCC40106B	839-47
		HCF40106B	839-48
	Signetics	HEF40106B	839-49
40107	**RCA**	**CD40107B**	**★ 704**
			★1145
			824-109
		CD40107BE	**★ 704**
			★1145
			824-110
			¶ 353-6
	SGS	HCC40107B	824-111
		HCF40107B	824-112
	Toshiba	**TC40107**	**★1363**
			824-113
40108	**RCA**	**CD40108B**	**★1146**
			★1147
			831-61
		CD40108BE	**★1146**
			★1147
			831-62
40109	**RCA**	**CD40109B**	**★ 704**
			★1145
			837-33
		CD40109BE	**★ 704**
			★1145
			837-34
	SGS	HCC40109B	837-35
		HCF40109B	837-36
4011	Fairchild	F4011BC	825-84
		F4011BM	825-85
	National	CD4011AC	825-90
		CD4011AM	825-91
		CD4011BC	825-92
		CD4011BM	825-93
	Panasonic	MN4011B	825-94
	RCA	CD4011	¶ 352-6
		CD4011A	**★ 704**
			★1145
			825-95
		CD4011AE	**★ 704**
			★1145
			825-96
		CD4011B	**★ 704**
			★1145
			825-97
		CD4011BE	**★ 704**
			★1145
			825-98
			★ 704
			★1145
			3831-122
		CD4011UB	**★ 704**
			★1145
			825-99
		CD4011UBE	**★ 704**
			★1145
			825-100
	Sanyo	LC4011B	825-101
	SGS	HCC4011B	825-102
		HCF4011B	825-103
	Signetics	HEF4011B	825-104
		HEF4011UB	825-105
	Solitron	CM4011A	825-106
		CM4011AE	825-107
		CM4011B	825-108
			(Continued)
4011	Solitron	CM4011BE	825-109
	SSS	BCL4011B	825-112
		BCL4011UB	825-113
		SCL4011B	825-114
		SCL4011UB	825-115
	Toshiba	**TC4011B**	**★1363**
			825-116
		TC4011UB	**★1363**
			825-117
40110	**RCA**	**CD40110B**	**★1146**
			815-116
		CD40110BE	**★1146**
			815-117
40114	RCA	CD40114B	831-106
			3831-121
		CD40114BE	831-107
40115	**RCA**	**CD40115**	**★1145**
			837-45
40116	**RCA**	**CD40116**	**★1145**
			837-44
40117	**RCA**	**CD40117B**	**★1145**
			838-55
	Toshiba	**TC40117**	**★1363**
4012	Fairchild	F4012BC	824-142
		F4012BM	824-143
	Motorola	MC4012	881-64
			3854-113
	National	CD4012A	824-148
		CD4012BC	824-149
		CD4012BM	824-150
	Panasonic	MN4012B	824-151
	RCA	**CD4012A**	**★ 704**
			★1145
			824-152
		CD4012AE	**★ 704**
			★1145
			824-153
		CD4012B	**★ 704**
			★1145
			824-154
		CD4012BE	**★ 704**
			★1145
			824-155
		CD4012UB	**★ 704**
			★1145
			824-156
		CD4012UBE	**★ 704**
			★1145
			824-157
	SGS	HCC4012B	824-158
		HCF4012B	824-159
	Signetics	HEF4012B	824-160
	Solitron	CM4012A	824-161
		CM4012AE	824-162
	SSS	BCL4012B	824-164
		SCL4012B	824-165
	Toshiba	**TC4012B**	**★1363**
			824-166
40128	**Dense-Pac**	**DPE40128**	**★4008**
			3813-88
		DPS40128	**★4008**
			3845-110
4013	Fairchild	F4013BC	820-51
		F4013BM	820-52
	Motorola	MHQ4013	3310-38
	National	CD4013BC	820-55
		CD4013BM	820-56
	Panasonic	MN4013B	820-57
	RCA	CD4013	¶ 352-6
		CD4013A	**★ 704**
			★1146
			820-58
		CD4013AE	**★ 704**
			★1146
			820-59
		CD4013B	**★ 704**
			★1146
			820-60
		CD4013BE	**★ 704**
			★1146
			820-61
	Sanyo	LC4013B	820-62
	SGS	HCC4013B	820-63
		HCF4013B	820-64
	Signetics	HEF4013B	820-65
	Solitron	CM4013A	820-66
			(Continued)

Arranged alphanumerically from left to right.

Base Number	Source	Device	Page-Line
4013	Solitron	CM4013AE	820-67
		CM4013B	820-68
		CM4013BE	820-69
	SSS	BCL4013B	820-71
		SCL4013B	820-72
	Telefunken	U4013	¶ 420-4
	Toshiba	**TC4013B**	★ **1363**
			820-73
4014	Fairchild	F4014BC	836-121
			3856-14
		F4014BM	836-122
			3856-25
	Motorola	MHQ4014	3310-39
	National	CD4014A	836-125
			3856-17
		CD4014BC	836-126
		CD4014BM	836-127
	RCA	**CD4014A**	★ **704**
			836-128
		CD4014AE	★ **704**
			836-129
		CD4014B	★ **704**
			836-130
			3856-29
		CD4014BE	★ **704**
			836-131
			3856-19
	SGS	HCC4014B	836-132
		HCF4014B	836-133
	Signetics	HEF4014B	836-134
	Solitron	CM4014A	836-135
			3856-31
		CM4014AE	836-136
	SSS	BCL4014B	836-138
		SCL4014B	836-139
			3856-23
	Toshiba	**TC4014B**	★ **1363**
			836-140
40147	**RCA**	**CD40147B**	★ **1145**
			842-103
		CD40147BE	★ **1145**
			842-104
4015	Fairchild	F4015BC	834-158
			3855-34
		F4015BM	834-159
			3855-38
	Motorola	MC4015	864-259
	National	CD4015A	3855-36
		CD4015AC	834-162
		CD4015BC	834-163
		CD4015BM	834-164
	Panasonic	MN4015B	834-165
	RCA	**CD4015A**	★ **704**
			834-166
		CD4015AE	★ **704**
			834-167
		CD4015B	★ **704**
			834-168
			3855-39
		CD4015BE	★ **704**
			834-169
			3855-37
	SGS	HCC4015B	834-170
		HCF4015B	835-1
	Signetics	HEF4015B	835-2
	Solitron	CM4015A	835-3
			3855-33
		CM4015AE	835-4
			3855-32
	SSS	BCL4015B	835-6
		SCL4015B	835-7
			3855-41
	Toshiba	**TC4015B**	★ **1363**
			835-8
4016	Fairchild	F4016C	2824-38
		F4016M	2824-39
	Motorola	MC4016	862-38
			¶ 423-6
	National	CD4016BC	2824-46
		CD4016BM	2824-47
	NEC	μPD4016-1	3839-48
		μPD4016-2	3839-20
		μPD4016-3	3838-92
		μPD4016-5	3838-41
	Panasonic	MN4016B	2824-52
	RCA	**CD4016A**	★ **704**
			(Continued)
4016	**RCA**	**CD4016A**	★ **1147**
			2824-53
			¶ 396-14
		CD4016AE	★ **704**
			★ **1147**
			2824-54
		CD4016B	★ **704**
			★ **1147**
			2824-55
		CD4016BE	★ **704**
			★ **1147**
			2824-56
	SGS	HCC4016B	2824-64
		HCF4016B	2824-65
	Signetics	HEF4016	2824-67
		HEF4016B	2824-68
	Solitron	CM4016A	2824-33
			2824-69
		CM4016AE	2824-34
			2824-70
	SSS	BCL4016B	2824-73
		SCL4016B	2824-36
	Toshiba	**TC4016B**	★ **1363**
			2824-37
40160	Fairchild	F40160BC	815-9
		F40160BM	815-10
	National	CD40160BC	815-13
		CD40160BM	815-14
	RCA	**CD40160B**	★ **1146**
			815-15
		CD40160BE	★ **1146**
			815-16
	SGS	HCC40160B	815-17
		HCF40160B	815-18
	Signetics	HEF40160B	815-19
	Toshiba	**TC40160B**	★ **1363**
			815-23
40161	Fairchild	F40161BC	812-19
		F40161BM	812-20
	National	CD40161BC	812-23
		CD40161BM	812-24
	Panasonic	MN40161B	812-25
	RCA	**CD40161B**	★ **1146**
			812-26
		CD40161BE	★ **1146**
			812-27
	SGS	HCC40161B	812-28
		HCF40161B	812-29
	Signetics	HEF40161B	812-30
	Toshiba	**TC40161B**	★ **1363**
			812-34
40162	Fairchild	F40162BC	814-143
		F40162BM	814-144
	National	CD40162BC	814-147
		CD40162BM	814-148
	RCA	**CD40162B**	★ **1146**
			814-149
		CD40162BE	★ **1146**
			814-150
	SGS	HCC40162B	814-151
		HCF40162B	814-152
	Signetics	HEF40162B	814-153
	Toshiba	**TC40162B**	★ **1363**
			814-157
40163	Fairchild	F40163BC	811-156
		F40163BM	811-157
	National	CD40163BC	811-160
		CD40163BM	811-161
	RCA	**CD40163B**	★ **1146**
			811-162
		CD40163BE	★ **1146**
			811-163
	SGS	HCC40163B	811-164
		HCF40163	811-165
	Signetics	HEF40163B	811-166
	Toshiba	**TC40163B**	★ **1363**
			811-170
4017	Fairchild	F4017BC	814-89
		F4017BM	814-90
	Motorola	MC4017	862-39
	National	CD4017BC	814-93
		CD4017BM	814-94
	Panasonic	MN4017B	814-95
	RCA	CD4017	¶ 356-9
		CD4017A	★ **704**
			★ **1146**
			(Continued)
4017	RCA	CD4017A	814-96
		CD4017AE	★ **704**
			★ **1146**
			814-97
		CD4017B	★ **704**
			★ **1146**
			814-98
		CD4017BE	★ **704**
			★ **1146**
			814-99
	Sanyo	STK4017	3316-214
	SGS	HCC4017B	814-100
		HCF4017B	814-101
	Signetics	HEF4017B	814-102
	Solitron	CM4017A	814-103
		CM4017AE	814-104
	SSS	BCL4017B	814-106
		SCL4017B	814-107
	Toshiba	**TC4017B**	★ **1363**
			814-108
40174	Fairchild	F40174BC	821-31
		F40174BM	821-32
	National	CD40174BC	821-35
		CD40174BM	821-36
	RCA	**CD40174B**	★ **704**
			★ **1146**
			821-37
		CD40174BE	★ **704**
			★ **1146**
			821-38
	SGS	HCC40174B	821-39
		HCF40174B	821-40
	Signetics	HEF40174B	821-41
	Toshiba	**TC40174B**	★ **1363**
			821-45
40175	Fairchild	F40175BC	820-118
		F40175BM	820-119
	National	CD40175B	820-122
	RCA	**CD40175B**	★ **1146**
			820-123
		CD40175BE	★ **1146**
			820-124
	Signetics	HEF40175B	820-125
	Toshiba	**TC40175B**	★ **1363**
			820-126
4018	Fairchild	F4018BC	816-97
		F4018BM	816-98
	Motorola	MC4018	862-32
	National	CD4018BC	816-101
		CD4018BM	816-102
	RCA	CD4018	¶ 356-13
		CD4018A	★ **1146**
			816-103
		CD4018AE	★ **1146**
			816-104
		CD4018B	★ **1146**
			816-105
		CD4018BE	★ **1146**
			816-106
	SGS	HCC4018B	816-107
		HCF4018B	816-108
	Signetics	HEF4018B	816-109
	Solitron	CM4018A	816-110
		CM4018AE	816-111
			3856-21
	SSS	BCL4018B	816-113
		SCL4018B	816-114
	Toshiba	**TC4018B**	★ **1363**
			816-115
40181	**RCA**	**CD40181B**	★ **1147**
			806-178
		CD40181BE	★ **1147**
			807-1
	SGS	HCC40181B	807-3
		HCF40181B	807-4
40182	**RCA**	**CD40182B**	★ **1147**
			807-20
		CD40182BE	★ **1147**
			807-21
	SGS	HCC40182	807-22
		HCF40182	807-23
4019	Fairchild	F4019BC	826-5
		F4019BM	826-6
	Motorola	MC4019	862-33
	National	CD4019BC	826-7
		CD4019BM	826-8
			(Continued)
4019	RCA	CD4019	¶ 352-6
		CD4019A	★ **704**
			★ **1145**
			★ **1147**
			826-9
		CD4019AE	★ **704**
			★ **1145**
			★ **1147**
			826-10
		CD4019B	★ **704**
			★ **1145**
			★ **1147**
			826-11
		CD4019BE	★ **704**
			★ **1145**
			★ **1147**
			826-12
	Sanyo	STK4019	3316-215
	SGS	HCC4019B	826-13
		HCF4019B	826-14
	Signetics	HEF4019B	826-15
	Solitron	CM4019A	826-16
		CM4019AE	826-17
	SSS	BCL4019B	826-19
		SCL4019B	826-20
	Toshiba	**TC4019B**	★ **1363**
			826-21
40192	Dense-Pac	DEP40192	3813-92
		DPE40192	★ **4008**
	Fairchild	F40192BC	815-54
		F40192BM	815-55
	National	CD40192BC	815-60
		CD40192BM	815-61
	RCA	**CD40192B**	★ **1146**
			815-64
		CD40192BE	★ **1146**
			815-65
	SGS	HCC40192B	815-68
		HCF40192B	815-70
	Signetics	HEF40192B	815-72
	Toshiba	**TC40192B**	★ **1363**
			815-80
40193	Fairchild	F40193BC	812-89
		F40193BM	812-90
	National	CD40193BC	812-95
		CD40193BM	812-96
	RCA	**CD40193B**	★ **1146**
			812-100
		CD40193BE	★ **1146**
			812-101
	Signetics	HEF40193B	812-106
	Toshiba	**TC40193**	★ **1363**
			812-114
40194	Fairchild	F40194BC	835-50
			3855-12
		F40194BM	835-51
			3855-2
	RCA	CD40194B	835-71
	SGS	HCC40194B	835-54
		HCF40194B	835-55
	Signetics	HEF40194B	835-80
	Toshiba	**TC40194B**	★ **1363**
			835-56
40195	Fairchild	F40195BC	835-113
			3855-13
		F40195BM	835-114
			3855-3
	National	CD40195BC	835-115
		CD40195BM	835-116
	Signetics	HEF40195B	835-117
401M3	FujitsuA	FBC401M3	2046-15
402	Cherry	CS402	3400-74
	DY-4	DSTD-402	2040-34
	Fairchild	**F402**	★ **1035**
	Hitachi	HMCS402AC	1405-37
		HMCS402C	1405-38
		HMCS402CL	1405-39
	National	COP402	1450-124
			1407-21
		COP402M	1450-115
			1407-22
	Siliconix	**DG402**	★ **3223**
			★ **3231**
	Sprague	UHC/D-402	864-69
			2898-118
		UHP-402	★ **3269**
			(Continued)

¶ Indicates page number in Application Note Directory.
★ Indicates additional data is provided on the page noted.

Base Number	Source	Device	Page-Line
402	Sprague	UHP-402	864-73
			2898-122
4020	Fairchild	F4020BC	813-182
		F4020BM	813-183
	National	CD4020BC	813-186
		CD4020BM	813-187
	RCA	**CD4020A**	**★ 704**
			★ 1146
			813-188
		CD4020AE	**★ 704**
			★ 1146
			813-189
		CD4020B	**★ 704**
			★ 1146
			813-190
		CD4020BE	**★ 704**
			★ 1146
			813-191
	SGS	HCC4020B	814-1
		HCF4020B	814-2
	Signetics	HEF4020B	814-3
	Solitron	CM4020A	814-4
		CM4020AE	814-5
	SSS	BCL4020B	814-7
		SCL4020B	814-8
	Toshiba	**TC4020B**	**★ 1363**
			814-9
40208	**RCA**	**CD40208B**	**★ 1146**
			★ 1147
			831-63
		CD40208BE	**★ 1146**
			★ 1147
			831-64
	SGS	HCC40208B	831-65
		HCF40208B	831-66
4021	Fairchild	F4021BC	835-118
			3856-15
		F4021BM	835-119
			3856-26
	Motorola	MC4021	854-38
	National	CD4021A	835-122
			3856-18
		CD4021BC	835-123
		CD4021BM	835-124
	RCA	**CD4021A**	**★ 704**
			835-125
		CD4021AE	**★ 704**
			835-126
		CD4021B	**★ 704**
			835-127
			3856-30
		CD4021BE	**★ 704**
			835-128
			3856-20
	Sanyo	STK4021	3318-125
	SGS	HCC4021B	835-129
		HCF4021B	835-130
	Signetics	HEF4021B	835-131
	Solitron	CM4021A	835-132
			3856-32
		CM4021AE	835-133
			3856-22
	SSS	BCL4021B	835-135
		SCL4021B	835-136
			3856-24
	Toshiba	**TC4021B**	**★ 1363**
			835-137
4022	Fairchild	F4022BC	816-72
		F4022BM	816-73
	Motorola	MC4022	854-39
	National	CD4022BC	816-76
		CD4022BM	816-77
	RCA	**CD4022A**	**★ 704**
			★ 1146
			816-78
		CD4022AE	**★ 704**
			★ 1146
			816-79
		CD4022B	**★ 704**
			★ 1146
			816-80
		CD4022BE	**★ 704**
			★ 1146
			816-81
	SGS	HCC4022B	816-82
		HCF4022B	816-83
			(Continued)
4022	Signetics	HEF4022B	816-84
	Solitron	CM4022A	816-85
		CM4022AE	816-86
	SSS	BCL4022B	816-88
		SCL4022B	816-89
	Toshiba	**TC4022B**	**★ 1363**
			816-90
4023	**Burr-Brown**	**4023**	**★ 3152**
			3401-23
	Fairchild	F4023BC	825-17
		F4023BM	825-18
	Motorola	MC4023	862-51
	National	CD4023BC	825-23
		CD4023BM	825-24
	Panasonic	MN4023B	825-25
	RCA	**CD4023A**	**★ 704**
			★ 1145
			825-26
		CD4023AE	**★ 704**
			★ 1145
			825-27
		CD4023B	**★ 704**
			★ 1145
			825-28
		CD4023BE	**★ 704**
			★ 1145
			825-29
		CD4023UB	**★ 704**
			★ 1145
			825-30
		CD4023UBE	**★ 704**
			★ 1145
			825-31
	Sanyo	STK4023	3318-126
	SGS	HCC4023B	825-32
		HCF4023B	825-33
	Signetics	HEF4023B	825-34
	Solitron	CM4023A	825-35
		CM4023AE	825-36
	SSS	BCL4023B	825-38
		SCL4023B	825-39
	Toshiba	**TC4023B**	**★ 1363**
			825-40
4024	Fairchild	F4024BC	813-52
		F4024BM	813-53
	Motorola	MC4024	881-7
			¶ 423-6
			3376-45
	National	CD4024BC	813-56
		CD4024BM	813-57
	Panasonic	MN4024B	813-58
	RCA	CD4024	¶ 356-9
		CD4024A	**★ 704**
			★ 1146
			813-59
		CD4024AE	**★ 704**
			★ 1146
			813-60
		CD4024B	**★ 704**
			★ 1146
			813-61
		CD4024BE	**★ 704**
			★ 1146
			813-62
	SGS	HCC4024B	813-63
		HCF4024B	813-64
	Signetics	HEF4024B	813-65
	Solitron	CM4024A	813-66
		CM4024AE	813-67
	SSS	BCL4024B	813-69
		SCL4024B	813-70
	Toshiba	**TC4024B**	**★ 1363**
			813-71
40240	Signetics	HEF40240B	839-136
40244	Signetics	HEF40244B	840-44
40245	Signetics	HEF40245B	841-187
4025	AMD	MM4025	3854-17
	Burr-Brown	**4025**	**★ 3152**
			3401-24
	Fairchild	F4025BC	827-85
		F4025BM	827-86
	National	CD4025A	827-91
		CD4025BC	827-92
		CD4025BM	827-93
	Panasonic	MN4025B	827-94
	RCA	**CD4025A**	**★ 704**
			(Continued)
4025	**RCA**	**CD4025A**	**★ 1145**
			827-95
		CD4025AE	**★ 704**
			★ 1145
			827-96
		CD4025B	**★ 704**
			★ 1145
			827-97
		CD4025BE	**★ 704**
			★ 1145
			827-98
		CD4025UB	**★ 704**
			★ 1145
			827-99
		CD4025UBE	**★ 704**
			★ 1145
			827-100
	Sanyo	STK4025	3318-127
	SGS	HCC4025B	827-101
		HCF4025B	827-102
	Signetics	HEF4025B	827-103
	Solitron	CM4025A	827-104
		CM4025AE	827-105
	SSS	BCL4025B	827-107
		SCL4025B	827-108
	Toshiba	**TC4025B**	**★ 1363**
			827-109
40250	RCA	PA40250	4454-12
40256	**Dense-Pac**	**DPE40256**	**★ 4008**
			3813-95
		DPS40256	**★ 4008**
			3846-50
40257	**RCA**	**CD40257B**	**★ 704**
			★ 1147
			832-161
		CD40257BE	**★ 704**
			★ 1147
			832-162
	SGS	HCC40257B	832-163
		HCF40257B	832-164
4026	AMD	MM4026	3854-18
	RCA	CD4026	¶ 353-9
		CD4026A	**★ 1146**
			814-42
		CD4026AE	**★ 1146**
			814-43
		CD4026B	**★ 1146**
			814-44
		CD4026BE	**★ 1146**
			814-45
	SGS	HCC4026B	814-46
		HCF4026B	814-47
	Solitron	CM4026A	814-48
		CM4026AE	814-49
	SSS	BCL4026AB	814-52
		SCL4026AB	814-54
4027	AMD	MM4027	3854-19
	Fairchild	F4027BC	823-35
		F4027BM	823-36
	ITT	ITT4027-2	3826-28
		ITT4027-3	3826-30
		ITT4027-4	3826-33
		ITT4027-6	3826-36
	Mostek	MK4027	¶ 373-13
			¶ 383-14
			¶ 435-13
			¶ 438-5
			¶ 441-9
			¶ 441-14
		MKB4027-83	3826-31
		MKB4027-84	3826-34
	Motorola	MCM4027	¶ 440-7
		MCM4027A-1	3826-27
	National	CD4027BC	823-39
		CD4027BM	823-40
	Panasonic	MN4027B	823-41
	RCA	**CD4027A**	**★ 704**
			★ 1146
			823-42
		CD4027AE	**★ 704**
			★ 1146
			823-43
		CD4027B	**★ 704**
			★ 1146
			823-44
		CD4027BE	**★ 704**
			(Continued)
4027	**RCA**	**CD4027BE**	**★ 1146**
			823-45
	SGS	HCC4027B	823-46
		HCF4027B	823-47
		M4027-2	3826-29
		M4027-3	3826-32
		M4027-4	3826-35
	Signetics	HEF4027B	823-48
	Solitron	CM4027A	823-49
		CM4027AE	823-50
	SSS	BCL4027B	823-52
		SCL4027B	823-53
	Toshiba	**TC4027B**	**★ 1363**
			823-54
4028	Fairchild	F4028BC	817-31
		F4028BM	817-32
	National	CD4028BC	817-35
		CD4028BM	817-36
	Panasonic	MN4028B	817-37
	RCA	**CD4028A**	**★ 704**
			★ 1145
			817-38
		CD4028AE	**★ 704**
			★ 1145
			817-39
		CD4028B	**★ 704**
			★ 1145
			817-40
		CD4028BE	**★ 704**
			★ 1145
			817-41
	SGS	HCC4028B	817-42
		HCF4028B	817-43
	Signetics	HEF4028B	817-44
	Solitron	CM4028A	817-45
		CM4028AE	817-46
	SSS	BCL4028B	817-48
		SCL4028B	817-49
	Toshiba	**TC4028B**	**★ 1363**
			817-50
4029	Fairchild	F4029BC	816-116
		F4029BM	816-117
	National	CD4029BC	816-120
		CD4029BM	816-121
	Panasonic	MN4029B	816-122
	RCA	**CD4029A**	**★ 1146**
			816-123
		CD4029B	**★ 1146**
			816-124
		CD4029BE	**★ 1146**
			816-125
	SGS	HCC4029B	816-126
		HCF4029B	816-127
	Signetics	HEF4029B	816-128
	Solitron	CM4029A	816-129
		CM4029AE	816-130
	SSS	BCL4029B	816-132
		SCL4029B	816-133
	Toshiba	**TC4029B**	**★ 1363**
			816-134
402M3	FujitsuA	FBC402M3	2046-16
403	DY-4	DSTD-403	2040-24
	Siliconix	**DG403**	**★ 3223**
			★ 3231
	Sprague	UHC/D-403	864-70
			2898-119
		UHP-403	**★ 3269**
			864-74
			2898-123
4030	Fairchild	F4030BC	828-56
		F4030BM	828-57
	National	CD4030A	828-62
	Panasonic	MN4030B	828-67
	RCA	**CD4030A**	**★ 704**
			★ 1145
			★ 1147
			828-69
		CD4030AE	**★ 704**
			★ 1145
			★ 1147
			828-70
		CD4030B	**★ 704**
			★ 1145
			★ 1147
			828-71
		CD4030BE	**★ 704**
			(Continued)

Arranged alphanumerically from left to right.

Base Number	Source	Device	Page-Line
4030	**RCA**	**CD4030BE**	★1145
			★1147
			828-72
	SGS	HCC4030B	828-75
		HCF4030B	828-77
	Signetics	HEF4030B	828-79
	Solitron	CM4030A	828-81
		CM4030AE	828-82
	SSS	BCL4030B	828-87
		SCL4030B	828-89
	Toshiba	**TC4030B**	★1363
			828-91
4031	Fairchild	F4031BC	837-12
			3856-119
		F4031BM	837-13
			3856-121
	National	CD4031BC	837-14
			3857-3
		CD4031BM	837-15
			3857-4
	RCA	**CD4031A**	★ 704
			837-16
		CD4031AE	★ 704
			837-17
		CD4031B	★ 704
			837-18
			3856-122
		CD4031BE	★ 704
			837-19
			3856-120
	SGS	HCC4031B	837-20
		HCF4031B	837-21
	Signetics	HEF4031B	837-22
4032	**RCA**	**CD4032A**	★1147
			806-23
		CD4032AE	★1147
			806-24
		CD4032B	★1147
			806-25
		CD4032BE	★1147
			806-26
	SGS	HCC4032B	806-27
		HCF4032B	806-28
	Solitron	CM4032A	806-29
		CM4032AE	806-30
	Toshiba	**TC4032B**	★1363
			806-31
4033	RCA	CD4033	¶ 353-9
		CD4033A	★1146
			814-56
		CD4033AE	★1146
			814-57
		CD4033B	★1146
			814-58
		CD4033BE	★1146
			814-59
	SGS	HCC4033B	814-60
		HCF4033B	814-61
	Solitron	CM4033A	814-62
		CM4033AE	814-63
	SSS	BCL4033AB	814-66
		SCL4033AB	814-67
4034	Fairchild	F4034BC	835-138
		F4034BM	835-139
	National	CD4034BC	835-142
			3855-101
		CD4034BM	835-143
			3855-102
	RCA	**CD4034A**	★ 704
			★1147
			835-144
		CD4034AE	★ 704
			★1147
			835-145
		CD4034B	★ 704
			★1147
			835-146
			★ 704
			★1147
			3855-103
		CD4034BE	★ 704
			★1147
			835-147
	SGS	HCC4034B	835-148
		HCF4034B	835-149
	Solitron	CM4034A	835-150
			(Continued)
4034	Solitron	CM4034A	3855-107
		CM4034AE	835-151
			3855-100
	SSS	BCL4034B	835-153
		SCL4034B	835-154
			3855-98
	Toshiba	**TC4034B**	★1363
			835-155
			3855-105
4035	Fairchild	F4035BC	835-63
			3855-14
		F4035BM	835-64
			3855-4
	National	CD4035BC	835-67
			3855-6
		CD4035BM	835-68
			3855-16
	Panasonic	MN4035B	835-69
	RCA	CD4035A	835-72
		CD4035AE	835-73
		CD4035B	835-74
			3855-18
		CD4035BE	835-75
			3855-8
	SGS	HCC4035B	835-77
		HCF4035B	835-79
	Signetics	HEF4035B	835-81
	Solitron	CM4035A	835-82
			3855-19
		CM4035AE	835-83
			3855-9
	SSS	BCL4035B	835-85
		SCL4035B	835-86
			3855-11
	Toshiba	**TC4035B**	★1363
			835-88
4036	RCA	CD4036A	831-76
			3830-110
		CD4036AE	831-77
	Solitron	CM4036A	831-78
			3830-108
		CM4036AE	831-79
	Toshiba	**TC4036B**	★1363
			831-80
40368	Toshiba	TC40368	810-37
4037	**RCA**	**CD4037A**	★1145
			826-1
		CD4037AE	★1145
			826-2
	Solitron	CM4037A	826-3
		CM4037AE	826-4
40373	Signetics	HEF40373B	830-25
40374	Signetics	HEF40374B	822-158
4038	Motorola	MC4038	862-70
	RCA	**CD4038A**	★1147
			806-12
		CD4038AE	★1147
			806-13
		CD4038B	★1147
			806-14
		CD4038BE	★1147
			806-15
	SGS	HCC4038B	806-16
		HCF4038B	806-17
	Solitron	CM4038A	806-18
		CM4038AE	806-19
	Toshiba	**TC4038B**	★1363
			806-20
4039	Motorola	MC4039	2875-95
	RCA	CD4039A	831-81
			3830-107
		CD4039AE	831-82
	Solitron	CM4039A	831-83
			3830-109
		CM4039AE	831-84
	Toshiba	**TC4039B**	★1363
			831-85
404	Ferranti	ZN404	3402-33
	FujitsuA	FBM-u404	2046-28
	Hitachi	HMCS404AC	1405-40
		HMCS404C	1451-58
			1405-41
		HMCS404CL	1405-42
	Inmos	IMST404	1439-9
	National	COP404	1450-125
		COP404LP	1407-23
			(Continued)
404	National	COP404LS	1407-24
	PMI	CMP-404A	3315-24
		CMP-404B	3315-36
		CMP-404E	3315-25
		CMP-404F	3315-37
	SGS	LS404	3370-18
		LS404C	3371-49
	Siliconix	**DG404**	★3223
			★3231
	Siltronics	S404	3322-102
4040	Fairchild	F4040BC	813-140
		F4040BM	813-141
	Motorola	MC4040	862-82
	National	CD4040BC	813-144
		CD4040BM	813-145
	Panasonic	MN4040B	813-146
	RCA	**CD4040A**	★1146
			813-147
		CD4040AE	★1146
			813-148
		CD4040B	★1146
			813-149
		CD4040BE	★1146
			813-150
	SGS	HCC4040B	813-151
		HCF4040B	813-152
	Signetics	HEF4040B	813-153
	Solitron	CM4040A	813-154
		CM4040AE	813-155
	SSS	BCL4040B	813-157
		SCL4040B	813-158
	Toshiba	**TC4040B**	★1363
			813-159
4041	Fairchild	F4041BC	808-108
		F4041BM	808-109
	Motorola	MC4041	2879-17
	National	CD4041C	808-110
		CD4041M	808-111
	RCA	**CD4041A**	★ 704
			★1145
			808-112
		CD4041AE	★ 704
			★1145
			808-113
		CD4041UB	★ 704
			★1145
			808-114
		CD4041UBE	★ 704
			★1145
			808-115
	SGS	HCC4041UB	808-116
		HCF4041UB	808-117
	Signetics	HEF4041B	808-118
	Solitron	CM4041A	808-119
		CM4041AE	808-120
	SSS	BCL4041UB	808-122
		SCL4041UB	808-123
4042	Davidge	DSB-4042	2005-7
	Fairchild	F4042BC	829-34
		F4042BM	829-35
	Motorola	MC4042	864-20
			2893-6
	National	CD4042BC	829-38
		CD4042BM	829-39
	RCA	**CD4042A**	★1146
			829-40
		CD4042AE	★1146
			829-41
		CD4042B	★1146
			829-42
		CD4042BE	★1146
			829-43
	SGS	HCC4042B	829-44
		HCF4042B	829-45
	Siemens	SDA4042	3325-80
	Signetics	HEF4042B	829-46
	Solitron	CM4042A	829-47
		CM4042AE	829-48
	SSS	BCL4042B	829-50
		SCL4042B	829-51
	Toshiba	**TC4042B**	★1363
			829-52
4043	Fairchild	F4043BC	829-70
		F4043BM	829-71
	Goldstar	**GM4043**	★3580
			3323-17
			(Continued)
4043	Motorola	MC4043	2892-110
	National	CD4043A	829-74
		CD4043BC	829-75
		CD4043BM	829-76
	RCA	**CD4043A**	★ 704
			★1146
			829-77
		CD4043AE	★ 704
			★1146
			829-78
		CD4043B	★ 704
			★1146
			829-79
		CD4043BE	★ 704
			★1146
			829-80
	SGS	HCC4043B	829-81
		HCF4043B	829-82
	Signetics	HEF4043B	829-83
	Solitron	CM4043A	829-84
		CM4043AE	829-85
	SSS	BCL4043B	829-87
		SCL4043B	829-88
	Toshiba	**TC4043B**	★1363
			829-89
4044	AMD	AM4044C	3840-84
	Davidge	DSB-4044	2005-8
	Fairchild	F4044BC	829-53
		F4044BM	829-54
	Motorola	MC4044	887-63
			¶ 423-6
			3375-69
	National	CD4044A	829-57
		CD4044BC	829-58
		CD4044BM	829-59
	RCA	**CD4044A**	★1146
			829-60
		CD4044AE	★1146
			829-61
		CD4044B	★1146
			829-62
	SGS	HCC4044B	829-63
		HCF4044B	829-64
	Signetics	HEF4044B	829-65
	Solitron	CM4044A	829-66
	SSS	BCL4044B	829-67
		SCL4044B	829-68
	Toshiba	**TC4044B**	★1363
			829-69
4045	**RCA**	**CD4045A**	★1146
			834-124
		CD4045AE	★1146
			834-125
		CD4045B	★1146
			834-126
		CD4045BE	★1146
			834-127
	SGS	HCC4045B	834-128
		HCF4045B	834-129
	Solitron	CM4045A	834-130
		CM4045AE	834-131
40450	RCA	PA40450	4454-13
4046	Davidge	DSA-4046	2037-24
	Fairchild	F4046BC	837-112
			3375-44
		F4046BM	837-113
			3375-45
	National	CD4046BC	837-116
			3375-50
		CD4046BM	837-117
			3375-51
	RCA	**CD4046A**	★1147
			837-118
			¶ 423-11
			3375-52
		CD4046AE	★1147
			837-119
			3375-53
		CD4046B	★1147
			837-120
			3375-54
		CD4046BE	★1147
			837-121
			3375-55
	SGS	HCC4046B	837-122
		HCF4046B	837-123
			(Continued)

¶ Indicates page number in Application Note Directory.
★ Indicates additional data is provided on the page noted.

Base Number	Source	Device	Page-Line
4046	Signetics	HEF4046B	837-124
	SSS	BCL4046B	837-127
		SCL4046B	837-129
			¶ 423-12
			3375-62
4047	Fairchild	F4047BC	833-168
		F4047BM	833-169
	National	CD4047BC	833-170
		CD4047BM	833-171
	RCA	CD4047	¶ 355-16
		CD4047A	**★ 1145**
			833-172
		CD4047AE	**★ 1145**
			833-173
		CD4047B	**★ 1145**
			833-174
		CD4047BE	**★ 1145**
			833-175
	SGS	HCC4047B	833-176
		HCF4047B	833-177
	Signetics	HEF4047B	833-178
	Solitron	CM4047A	833-179
		CM4047AE	833-180
	SSS	BCL4047B	833-182
		SCL4047B	833-183
	Toshiba	**TC4047B**	**★ 1363**
			833-184
4048	Motorola	MC4048	862-71
	National	CD4048BC	828-139
		CD4048BM	828-140
	RCA	**CD4048A**	**★ 704**
			★ 1145
			828-141
		CD4048AE	**★ 704**
			★ 1145
			828-142
		CD4048B	**★ 704**
			★ 1145
			828-143
		CD4048BE	**★ 704**
			★ 1145
			828-144
	SGS	HCC4048B	828-145
		HCF4048B	828-146
	Solitron	CM4048A	828-147
		CM4048AE	828-148
4049	Fairchild	F4049BC	809-32
		F4049BM	809-33
	National	CD4049UB	809-36
	Panasonic	MN4049B	809-37
	RCA	**CD4049A**	**★ 704**
			★ 1145
			809-38
		CD4049AE	**★ 704**
			★ 1145
			809-39
		CD4049UB	**★ 704**
			★ 1145
			809-40
		CD4049UBE	**★ 704**
			★ 1145
			809-41
	SGS	HCC4049UB	809-42
		HCF4049UB	809-43
	Signetics	HEF4049B	809-44
	Solitron	CM4049A	809-45
		CM4049AE	809-46
	SSS	BCL4049UB	809-48
		SCL4049UB	809-49
	Toshiba	**TC4049B**	**★ 1363**
			809-50
404C3	FujitsuA	FBC404C3A	2046-34
		FBC404C3S	2046-33
404D3	FujitsuA	MDC404D3	2046-36
404M3	**FujitsuA**	**FBC404M3**	**★ 2102**
			2046-18
		MBC404M3T	2042-61
405	Barvon	BC405	4439-30
			4439-31
	Signetics	**PLHS405**	**★ 4154**
			4474-57
	Siliconix	**DG405**	**★ 3223**
			★ 3231
4050	Fairchild	F4050BC	809-76
		F4050BM	809-77
	Motorola	MC4050	862-48
			(Continued)
4050	National	CD4050BC	809-80
		CD4050BM	809-81
	Panasonic	MN4050B	809-82
	RCA	**CD4050A**	**★ 704**
			★ 1145
			809-83
		CD4050AE	**★ 704**
			★ 1145
			809-84
		CD4050B	**★ 704**
			★ 1145
			809-85
		CD4050BE	**★ 704**
			★ 1145
			809-86
	SGS	HCC4050B	809-87
		HCF4050B	809-88
		TDA4050B	3322-166
	Siemens	TDA4050B	3307-81
	Signetics	HEF4050B	809-89
	Solitron	CM4050A	809-90
		CM4050AE	809-91
	SSS	BCL4050B	809-93
		SCL4050B	809-94
	Toshiba	**TC4050B**	**★ 1363**
			809-95
4051	Fairchild	F4051BC	2830-107
		F4051BM	2830-108
	RCA	**CD4051B**	**★ 1147**
			2830-122
		CD4051BE	**★ 1147**
			2830-123
	SGS	HCC4051B	2830-132
		HCF4051B	2830-133
	Signetics	HEF4051B	2830-135
		HEF4051BD	2830-136
	Solitron	CM4051A	2830-139
		CM4051AE	2830-140
	SSS	BCL4051B	2830-142
		SCL4051B	2830-143
	Telefunken	U4051	¶ 420-4
	Toshiba	**TC4051B**	**★ 1363**
			2830-144
4052	Fairchild	F4052BC	2830-5
		F4052BM	2830-6
	Fujitsu	MB4052	2835-26
	National	CD4052BC	2830-15
		CD4052BM	2830-16
	Panasonic	MN4052B	2830-21
	RCA	**CD4052B**	**★ 1147**
			2830-23
		CD4052BE	**★ 1147**
			2830-24
	SGS	HCC4052B	2830-33
		HCF4052B	2830-34
	Signetics	HEF4052B	2830-137
		HEF4052BD	2830-138
	Solitron	CM4052B	2830-36
		CM4052BE	2830-37
	SSS	BCL4052B	2830-39
		SCL4052B	2830-40
	Telefunken	U4052	¶ 420-4
	Toshiba	**TC4052B**	**★ 1363**
			2830-41
4053	Fairchild	F4053BC	2826-39
		F4053BM	2826-40
	Fujitsu	MB4053	2837-33
			2837-42
	National	CD4053BC	2826-47
		CD4053BM	2826-48
	Panasonic	MN4053B	2826-49
	RCA	**CD4053B**	**★ 1147**
			2826-51
		CD4053BE	**★ 1147**
			2826-52
	SGS	HCC4053B	2826-61
		HCF4053B	2826-62
	Signetics	HEF4053B	2826-64
		HEF4053BD	2826-65
	Solitron	CM4053A	2826-66
		CM4053AE	2826-67
	SSS	BCL4053B	2826-69
		SCL4053B	2826-70
	Toshiba	**TC4053B**	**★ 1363**
			2826-71
4054	**RCA**	**CD4054B**	**★ 1147**
			819-116
			2876-100
		CD4054BE	**★ 1147**
			819-117
	SGS	HCC4054B	819-118
		HCF4054B	819-119
	Toshiba	**TC4054B**	**★ 1363**
			819-120
			2876-101
40547	**Fujitsu**	**MB40547**	**★ 1611**
4055	AMD	AM4055	3857-39
	RCA	**CD4055B**	**★ 1147**
			819-74
			2875-144
		CD4055BE	**★ 1147**
			819-75
			2875-145
	SGS	HCC4055B	819-76
		HCF4055B	819-77
	Toshiba	**TC4055B**	**★ 1363**
			819-78
			2875-146
4056	AMD	AM4056	3857-46
	Motorola	MC4056	854-2
	RCA	**CD4056B**	**★ 1147**
			819-79
			2876-6
		CD4056BE	**★ 1147**
			819-80
			2876-7
	SGS	HCC4056B	819-81
		HCF4056B	819-82
	Toshiba	**TC4056B**	**★ 1363**
			819-83
			2876-10
4057	AMD	AM4057	3857-50
	RCA	**CD4057A**	**★ 1147**
			807-2
40576	**Fujitsu**	**MB40576**	**★ 1611**
4058	SGS	HCF4058B	829-10
	TeledyneP	4058	2864-27
4059	RCA	CD4059	¶ 423-1
		CD4059A	**★ 1146**
			816-59
			¶ 356-8
		CD4059AE	**★ 1146**
			816-60
	Signetics	HEF4059B	816-61
406	DY-4	DSTD-406	2040-55
	Siltronics	S406	3322-103
	Sprague	UHC/D-406	864-24
			2898-88
		UHP-406	**★ 3269**
			864-28
			2898-92
4060	IMI	G4060	4449-9
	Motorola	MC4060	886-149
	National	CD4060BC	814-28
		CD4060BM	814-29
	RCA	**CD4060A**	**★ 1146**
			814-30
		CD4060AE	**★ 1146**
			814-31
		CD4060B	**★ 1146**
			814-32
			¶ 419-18
		CD4060BE	**★ 1146**
			814-33
	SGS	HCC4060B	814-34
		HCF4060B	814-35
	Signetics	HEF4060B	814-36
	SSS	BCL4060B	814-38
		SCL4060B	814-39
4061	NEC	µPC4061	3357-11
	RCA	CD4061A	¶ 440-1
4062	Davidge	DSB-4062	2005-9
	NEC	µPC4062	3368-12
4063	**RCA**	**CD4063B**	**★ 1147**
			807-59
		CD4063BE	**★ 1147**
			807-60
	SGS	HCC4063B	807-63
		HCF4063B	807-64
	Toshiba	**TC4063B**	**★ 1363**
			807-69
4064	Davidge	DSB-4064	2005-10
	Dense-Pac	**DPE4064**	**★ 4008**
			3813-19
		DPS4064	**★ 4008**
			3843-27
	MicronTech	MT4064-12	3827-111
		MT4064-15	3827-126
		MT4064-20	3828-10
	NEC	µPC4064	3373-24
4065	TeledyneP	4065	2861-45
40650	**RCA**	**PA40650**	**★ 4742**
			4454-15
4066	Fairchild	F4066BC	2824-1
		F4066BM	2824-2
	National	CD4066BC	2824-8
		CD4066BM	2824-9
	Panasonic	MN4066B	2824-12
	RCA	**CD4066A**	**★ 704**
			★ 1147
			2824-14
		CD4066AE	**★ 704**
			★ 1147
			2824-15
		CD4066B	**★ 704**
			★ 1147
			2824-16
		CD4066BE	**★ 704**
			★ 1147
			2824-17
	SGS	HCC4066B	2824-19
		HCF4066B	2824-20
	Signetics	HEF4066B	2824-23
		HEF4066BD	2824-24
		N4066A	2824-25
	SSS	BCL4066B	2824-27
		SCL4066B	2824-28
	Toshiba	**TC4066B**	**★ 1363**
			2824-29
4067	Fairchild	F4067BC	2831-58
		F4067BM	2831-59
	RCA	**CD4067B**	**★ 704**
			★ 1147
			2831-60
		CD4067BE	**★ 704**
			★ 1147
			2831-61
	SGS	HCC4067B	2831-66
		HCF4067B	2831-67
	Signetics	HEF4067B	2831-68
		HEF4067BD	2831-69
4068	Fairchild	F4068BC	825-171
		F4068BM	825-172
	RCA	**CD4068B**	**★ 1145**
			825-175
		CD4068BE	**★ 1145**
			825-176
	SGS	HCC4068B	825-177
		HCF4068B	825-178
	Signetics	HEF4068B	825-179
	Solitron	CM4068A	825-180
		CM4068AE	825-181
	SSS	BCL4068B	825-183
		SCL4068B	825-184
	Toshiba	**TC4068B**	**★ 1363**
			825-185
4069	Fairchild	F4069UBC	811-56
		F4069UBM	811-57
	National	CD4069C	811-60
		CD4069M	811-61
	Panasonic	MN4069UB	811-62
	RCA	**CD4069UB**	**★ 704**
			★ 1145
			811-63
		CD4069UBE	**★ 704**
			★ 1145
			811-64
	Sanyo	LC4069UB	811-65
	SGS	HCC4069UB	811-66
		HCF4069UB	811-67
	Signetics	HEF4069UB	811-68
	Solitron	CM4069A	811-69
		CM4069AE	811-70
	SSS	BCL4069UB	811-73
		SCL4069UB	811-75
	Toshiba	**TC4069UB**	**★ 1363**
			811-77

Arranged alphanumerically from left to right.

Base Number	Source	Device	Page-Line
407	**Fairchild**	**F407**	★ **1043**
	Sprague	UHC/D-407	864-48
			2898-98
		UHP-407	★ **3269**
			864-52
			2898-102
	Telefunken	U407	3324-14
4070	Fairchild	F4070BC	828-58
		F4070BM	828-59
	National	CD4070BC	828-63
		CD4070BM	828-64
	Panasonic	MN4070B	828-68
	RCA	**CD4070B**	★ **704**
			★ **1145**
			★ **1147**
			828-73
		CD4070BE	★ **704**
			★ **1145**
			★ **1147**
			828-74
	SGS	HCC4070B	828-76
		HCF4070B	828-78
	Signetics	HEF4070B	828-80
	Solitron	CM4070A	828-83
		CM4070AE	828-84
	SSS	BCL4070B	828-88
		SCL4070B	828-90
4071	Fairchild	F4071BC	826-156
		F4071BM	826-157
	National	CD4071BC	826-160
		CD4071BM	826-161
	NEC	μPC4071	3357-14
	Panasonic	MN4071B	826-162
	RCA	**CD4071B**	★ **704**
			★ **1145**
			826-163
		CD4071BE	★ **704**
			★ **1145**
			826-164
	Sanyo	LC4071B	826-165
	SGS	HCC4071B	826-166
		HCF4071B	826-167
	Signetics	HEF4071B	826-168
	Solitron	CM4071A	826-169
		CM4071AE	826-170
	SSS	BCL4071B	826-172
		SCL4071B	826-173
	Toshiba	**TC4071B**	★ **1363**
			826-174
4072	Fairchild	F4072BC	826-70
		F4072BM	826-71
	National	CD4072BC	826-74
		CD4072BM	826-75
	NEC	μPC4072	3368-15
	Panasonic	MN4072B	826-76
	RCA	**CD4072B**	★ **704**
			★ **1145**
			826-77
		CD4072BE	★ **704**
			★ **1145**
			826-78
	SGS	HCC4072B	826-79
		HCF4072B	826-80
	Signetics	HEF4072B	826-81
	SSS	BCL4072B	826-83
		SCL4072B	826-84
	Toshiba	**TC4072B**	★ **1363**
			826-85
4073	Fairchild	F4073BC	824-26
		F4073BM	824-27
	National	CD4073BC	824-30
		CD4073BM	824-31
	Panasonic	MN4073B	824-32
	RCA	**CD4073B**	★ **704**
			★ **1145**
			824-33
		CD4073BE	★ **704**
			★ **1145**
			824-34
	SGS	HCC4073B	824-35
		HCF4073B	824-36
	Signetics	HEF4073B	824-37
	Solitron	CM4073A	824-38
		CM4073AE	824-39
	SSS	BCL4073B	824-41
		SCL4073B	824-42
			(Continued)
4073	**Toshiba**	**TC4073B**	★ **1363**
			824-43
4074	NEC	μPC4074	3373-26
40748	**Fujitsu**	**MB40748**	★ **1611**
4075	Fairchild	F4075BC	826-107
		F4075BM	826-108
	National	CD4075BC	826-111
		CD4075BM	826-112
	Panasonic	MN4075B	826-113
	RCA	**CD4075B**	★ **704**
			★ **1145**
			826-114
		CD4075BE	★ **704**
			★ **1145**
			826-115
	SGS	HCC4075B	826-116
		HCF4075B	826-117
	Signetics	HEF4075B	826-118
	SSS	BCL4075B	826-120
		SCL4075B	826-121
	Toshiba	**TC4075B**	★ **1363**
			826-122
4076	Fairchild	F4076BC	820-158
		F4076BM	820-159
	National	CD4076BC	820-162
		CD4076BM	820-163
	Panasonic	MN4076B	820-164
	RCA	**CD4076B**	★ **704**
			★ **1146**
			820-165
		CD4076BE	★ **704**
			★ **1146**
			820-166
	SGS	HCC4076B	820-167
		HCF4076B	820-168
	Signetics	HEF4076B	820-169
	Solitron	CM4076A	820-170
		CM4076AE	820-171
	SSS	BCL4076B	820-173
		SCL4076B	820-174
	Toshiba	**TC4076B**	★ **1363**
			820-175
4077	Fairchild	F4077BC	828-116
		F4077BM	828-117
	RCA	**CD4077B**	★ **704**
			★ **1145**
			★ **1147**
			828-120
		CD4077BE	★ **704**
			★ **1145**
			★ **1147**
			828-121
	SGS	HCC4077B	828-122
		HCF4077B	828-123
	Signetics	HEF4077B	828-124
	Solitron	CM4077A	828-125
		CM4077AE	828-126
	SSS	BCL4077B	828-128
		SCL4077B	828-129
	Toshiba	**TC4077**	★ **1363**
40776	**Fujitsu**	**MB40776**	★ **1611**
40778	**Fujitsu**	**MB40778**	★ **1611**
4078	Fairchild	F4078BC	828-1
		F4078BM	828-2
	Panasonic	MN4078B	828-5
	RCA	**CD4078B**	★ **1145**
			828-6
		CD4078BE	★ **1145**
			828-7
	SGS	HCC4078B	828-8
		HCF4078B	828-9
	Signetics	HEF4078B	828-10
	Solitron	CM4078A	828-12
		CM4078AE	828-13
	SSS	BCL4078B	828-16
		SCL4078B	828-17
	Toshiba	**TC4078B**	★ **1363**
			828-18
408	DY-4	DSTD-408	2040-69
	Siltronics	S408	3322-98
	Sprague	UHC/D-408	864-49
			2898-99
		UHP-408	★ **3269**
			864-53
			2898-103
	Telefunken	U408	3324-15
4080	TeledyneP	4080	2862-1
		4080-HR	2862-2
4081	Fairchild	F4081BC	824-83
		F4081BM	824-84
	National	CD4081BC	824-87
		CD4081BM	824-88
	NEC	μPC4081	3357-129
	Panasonic	MN4081B	824-89
	RCA	**CD4081B**	★ **704**
			★ **1145**
			824-90
		CD4081BE	★ **704**
			★ **1145**
			824-91
	Sanyo	LC4081B	824-92
	SGS	HCC4081B	824-93
		HCF4081B	824-94
	Signetics	HEF4081B	824-95
	Solitron	CM4081A	824-96
		CM4081AE	824-97
	SSS	BCL4081B	824-99
		SCL4081B	824-100
	TeledyneP	4081	2862-3
		4081-HR	2862-4
	Toshiba	**TC4081B**	★ **1363**
			824-101
4082	Burr-Brown	4082/03	3398-98
	Fairchild	F4082BC	823-176
		F4082BM	823-177
	Lambda	LAS4082	3395-152
	National	CD4082BC	823-180
		CD4082BM	823-181
	NEC	μPC4082	3368-42
	RCA	**CD4082B**	★ **704**
			★ **1145**
			823-182
		CD4082BE	★ **704**
			★ **1145**
			823-183
	SGS	HCC4082B	823-184
		HCF4082B	823-185
	Signetics	HEF4082B	823-186
	SSS	BCL4082B	823-188
		SCL4082B	823-189
	TeledyneP	4082	2862-5
		4082-HR	2862-6
	Toshiba	**TC4082B**	★ **1363**
			823-190
4084	NEC	μPC4084	3373-51
4085	**Burr-Brown**	**4085**	★ **3152**
			3401-56
		4085M	★ **3152**
			3401-57
	Fairchild	F4085BC	826-28
		F4085BM	826-29
	Panasonic	MN4085B	826-32
	RCA	**CD4085B**	★ **704**
			★ **1145**
			826-33
		CD4085BE	★ **704**
			★ **1145**
			826-34
	SGS	HCC4085B	826-35
		HCF4085B	826-36
	Signetics	HEF4085B	826-37
	SSS	BCL4085B	826-39
		SCL4085B	826-40
	Toshiba	**TC4085B**	★ **1363**
			826-41
40850	**RCA**	**PA40850**	★ **4742**
			4454-16
4086	Fairchild	F4086BC	826-58
		F4086BM	826-59
	RCA	**CD4086B**	★ **704**
			★ **1145**
			826-60
		CD4086BE	★ **704**
			★ **1145**
			826-61
	SGS	HCC4086B	826-62
		HCF4086B	826-63
	Signetics	HEF4086B	826-64
	SSS	BCL4086B	826-66
		SCL4086B	826-67
	Toshiba	**TC4086B**	★ **1363**
			826-68
4087	Sharp	LR4087	3379-1
4088	TeledyneP	4088	2873-2
4089	National	CD4089BC	838-28
		CD4089BM	838-29
	RCA	CD4089	¶ 352-7
		CD4089B	★ **1147**
			838-30
		CD4089BE	★ **1147**
			838-31
	SGS	HCC4089B	838-32
		HCF4089B	838-33
	Sharp	LR4089	3379-2
408D3	FujitsuA	FBC408D3	2046-35
409	**Datel**	**MVD-409**	★ **3163**
			2829-36
		MXD-409	★ **3163**
			2830-71
	Exar	XR-C409	¶ 359-10
	Ferranti	ZN409CE	3404-101
4091	Sharp	LR4091	3379-3
4092	Sharp	LR4092	3379-4
4093	Fairchild	F4093BC	838-162
		F4093BM	838-163
	National	CD4093BC	838-166
		CD4093BM	838-167
	Panasonic	MN4093B	838-168
	RCA	**CD4093B**	★ **704**
			★ **1145**
			838-169
			¶ 353-5
		CD4093BE	★ **704**
			★ **1145**
			838-170
	SGS	HCC4093B	838-171
		HCF4093B	838-172
	Signetics	HEF4093B	838-173
	SSS	BCL4093B	838-175
		SCL4093B	839-1
	Toshiba	**TC4093B**	★ **1363**
			839-2
4094	RCA	CD4094B	835-167
			3856-79
		CD4094BE	835-168
			3856-80
	SGS	HCC4094B	835-169
		HCF4094B	835-170
	Signetics	HEF4094B	835-171
	SSS	BCL4094B	835-173
		SCL4094B	835-174
			3856-82
	Toshiba	**TC4094B**	★ **1363**
			835-175
			3856-83
4095	**RCA**	**CD4095B**	★ **704**
			★ **1146**
			822-164
		CD4095BE	★ **704**
			★ **1146**
			822-165
	SGS	HCC4095B	822-168
4096	CharlesRiver	CM-4096	2043-21
		VEM-4096	2045-39
	RCA	**CD4096B**	★ **704**
			★ **1146**
			822-166
		CD4096BE	★ **704**
			★ **1146**
			822-167
	Reticon	RL4096	3400-37
	SGS	HCC4096B	822-169
		HCF4096B	822-170
4097	**RCA**	**CD4097B**	★ **704**
			★ **1147**
			2831-2
		CD4097BE	★ **704**
			★ **1147**
			2831-3
	SGS	HCC4097B	2831-4
		HCF4097B	2831-5
4098	**RCA**	**CD4098B**	★ **704**
			★ **1145**
			834-89
		CD4098BE	★ **704**
			★ **1145**
			834-90
			(Continued)

¶ Indicates page number in Application Note Directory.
★ Indicates additional data is provided on the page noted.

Base Number	Source	Device	Page-Line
4098	SGS	HCC4098B	834-91
		HCF4098B	834-92
40981	Sharp	LR40981A	3378-118
40982	Sharp	LR40982	3378-119
4099	National	CD4099BC	831-15
		CD4099BM	831-16
	RCA	**CD4099B**	★ **704** ★ **1146** 831-19
		CD4099BE	★ **704** ★ **1146** 831-20
	SGS	HCC4099B	831-23
		HCF4099B	831-24
	SSS	BCL4099B	831-27
		SCL4099B	831-28
	Toshiba	**TC4099B**	★ **1363** 831-29
40991	Sharp	LR40991	3378-120
40992	Sharp	LR40992	3378-121
	UMC	T40992	3378-67
40993	Sharp	LR40993	3378-122
	UMC	T40993	3380-109
40994	Sharp	LR40994	3378-123
40H000	Sharp	LR40H000	825-118
	Toshiba	**TC40H000**	★ **1363** 825-119
40H002	**Toshiba**	**TC40H002**	★ **1363** 827-189
40H004	Sharp	LR40H004	811-78
	Toshiba	**TC40H004**	★ **1363** 811-79
40H008	Sharp	LR40H008	824-102
	Toshiba	**TC40H008**	★ **1363** 824-103
40H010	Sharp	LR40H010	825-41
	Toshiba	**TC40H010**	★ **1363** 825-42
40H011	Sharp	LR40H011	824-44
	Toshiba	**TC40H011**	★ **1363** 824-45
40H020	**Toshiba**	**TC40H020**	★ **1363** 824-167
40H021	Sharp	LR40H021	823-191
	Toshiba	**TC40H021**	★ **1363** 823-192
40H027	Sharp	LR40H027	827-110
	Toshiba	**TC40H027**	★ **1363** 827-111
40H032	Sharp	LR40H032	826-175
	Toshiba	**TC40H032**	★ **1363** 826-176
40H042	Sharp	LR40H042	817-51
	Toshiba	**TC40H042**	★ **1363** 817-52
40H051	Sharp	LR40H051	826-42
	Toshiba	**TC40H051**	★ **1363** 826-43
40H074	Sharp	LR40H074	820-74
	Toshiba	**TC40H074**	★ **1363** 820-75
40H076	Sharp	LR40H076	823-55
	Toshiba	**TC40H076**	★ **1363** 823-56
		TC40H076A	★ **1363** 823-57
40H107	Sharp	LR40H107	823-159
	Toshiba	**TC40H107**	★ **1363** 823-160
		TC40H107A	★ **1363** 823-161
40H138	Sharp	LR40H138	818-80
	Toshiba	**TC40H138**	★ **1363** 818-81
40H139	Sharp	LR40H139	817-165
	Toshiba	**TC40H139**	★ **1363** 817-166
40H147	**Toshiba**	**TC40H147**	★ **1363** 837-67
40H148	**Toshiba**	**TC40H148**	★ **1363** 837-68
40H151	**Toshiba**	**TC40H151**	★ **1363** 833-52
40H153	Sharp	LR40H153	832-9
	Toshiba	**TC40H153**	★ **1363** 832-10
40H155	Sharp	LR40H155	817-167
	Toshiba	**TC40H155**	★ **1363** 817-168
40H157	Sharp	LR40H157	832-96
	Toshiba	**TC40H157**	★ **1363** 832-97
40H158	Sharp	LR40H158	832-130
	Toshiba	**TC40H158**	★ **1363** 832-131
40H160	**Toshiba**	**TC40H160**	★ **1363** 815-24
40H161	**Toshiba**	**TC40H161**	★ **1363** 812-35
40H162	**Toshiba**	**TC40H162**	★ **1363** 814-158
40H163	**Toshiba**	**TC40H163**	★ **1363** 811-171
40H164	Sharp	LR40H164	836-65
	Toshiba	**TC40H164**	★ **1363** 836-66
40H166	**Toshiba**	**TC40H166**	★ **1363** 836-21
40H174	Sharp	LR40H174	821-46
	Toshiba	**TC40H174**	★ **1363** 821-47
40H175	Sharp	LR40H175	820-127
	Toshiba	**TC40H175**	★ **1363** 820-128
40H192	Sharp	LR40H192	815-82
	Toshiba	**TC40H192**	★ **1363** 815-83
40H193	Sharp	LR40H193	812-116
	Toshiba	**TC40H193**	★ **1363** 812-117
40H194	Sharp	LR40H194	835-176
	Toshiba	**TC40H194**	★ **1363** 835-177
40H240	Sharp	LR40H240	839-137
	Toshiba	**TC40H240**	★ **1363** 839-138
40H241	**Toshiba**	**TC40H241**	★ **1363** 840-45
40H242	**Toshiba**	**TC40H242**	★ **1363**
40H243	**Toshiba**	**TC40H243**	★ **1363**
40H244	**Toshiba**	**TC40H244**	★ **1363** 840-46
40H245	**Toshiba**	**TC40H245**	★ **1363** 841-188
40H259	**Toshiba**	**TC40H259**	★ **1363** 831-30
40H273	**Toshiba**	**TC40H273**	★ **1363** 821-95
40H365	**Toshiba**	**TC40H365**	★ **1363** 809-178
40H366	**Toshiba**	**TC40H366**	★ **1363** 810-39
40H367	Sharp	LR40H367	809-177
	Toshiba	**TC40H367**	★ **1363** 809-179
40H368	Sharp	LR40H368	810-38
	Toshiba	**TC40H368**	★ **1363**
40H373	**Toshiba**	**TC40H373**	★ **1363** 830-26
40H374	**Toshiba**	**TC40H374**	★ **1363** 822-159
40H375	Sharp	LR40H375	829-32
	Toshiba	**TC40H375**	★ **1363** 829-33
40H386	**Toshiba**	**TC40H386**	★ **1363** 828-92
40H390	**Toshiba**	**TC40H390**	★ **1363** 815-144
40H393	**Toshiba**	**TC40H393**	★ **1363** 812-193
40HC390			
	Toshiba	TC40HC390	815-163
41	**Burr-Brown**	**UAF41**	★ **3152** 3398-18
	Intel	UPI-41	¶ 375-1
	NCR	ADP-41	2038-44
	PMI	**OP-41A**	★ **3636** 3340-96
		OP-41B	★ **3636** 3343-55
		OP-41E	★ **3636** 3340-97 (Continued)
41	**PMI**	**OP-41F**	★ **3636** 3343-54
		OP-41G	★ **3636** 3345-19
410	Barvon	BC410	4439-35 4439-36
	Intronics	C410	3398-113
	Motorola	**MVME410**	★ **2112** 2044-25
	National	COP410C	1451-3 1407-25
		COP410L	1451-4 1407-26
	Siltronics	S410	3322-99
	Telefunken	U410	3318-74
		U410B	¶ 415-3
410,30,90			
	CompAuto	410,30,90	1811-17
4100	CalDevices	HCS4100	4440-19
	Sanyo	LA4100	3318-47
	Siemens	TDA4100	3321-95
	Telefunken	U4100	3324-40
41000	**OKI**	**MSM41000-10**	★ **4732** 3830-51
		MSM41000-8	★ **4732** 3830-41
	RCA	**PA41000**	★ **4742** 4454-18
41001	**OKI**	**MSM41001-10**	★ **4732** 3830-42
		MSM41001-8	★ **4732** 3830-40
41004	**OKI**	**MSM41004-10**	★ **4732** 3829-83
		MSM41004-8	★ **4732** 3829-77
41005	**OKI**	**MSM41005-10**	★ **4732** 3829-78
		MSM41005-8	★ **4732** 3829-76
4101	Burr-Brown	ST4101	2015-35
	Sanyo	LA4101	3318-48
4102	Burr-Brown	ST4102	2017-2
	Sanyo	LA4102	3318-49
	Solitron	CM4102	816-12
4104	Fairchild	F4104BE	837-37
		F4104BM	837-38
	Mostek	MK4104-33	3840-60
		MK4104-34	3840-69
		MK4104-35	3840-91
		MK4104-4	3840-70
		MK4104-5	3840-92
		MKB4104-84	3840-71
	Signetics	HEF4104B	837-39
41051	**RCA**	**41051**	★ **3216** 2837-26
4107	**Fujitsu**	**MB4107**	★ **1611** 1467-63
4109	TeledyneP	4109	¶ 392-4
411	**Dense-Pac**	**DPD411M**	★ **4008** 3830-48
	Ferranti	ZN411	2895-125
	Intronics	C411	3398-114
	National	CIM-411	2030-18
		COP411C	1451-5 1407-27
		COP411L	1451-6 1407-28
		LF411	3346-38
		LF411A	3342-25
	Telefunken	U411	3318-75
		U411B	¶ 415-3
4110	Sanyo	LA4110	3318-50
	Siemens	TDA4110	3321-64
		TDA4110-3	3322-49
	TI	TCM4110	3377-154
41100	NEC		
		µPD41100D-10	3830-50
411000	NEC		
		µPD411000-12	3830-60
		µPD411000-15	3830-71
	Toshiba	**TMM411000**	★ **4263**
411001	NEC		
		µPD411001-10	3830-49
		µPD411001-12	3830-61
		µPD411001-15	3830-72
	Toshiba	**TMM411001**	★ **4263**
411024	AT&T	M411024K-12	3830-52
		M411024K-15	3830-62
		M411024P-12	3830-53
		M411024P-15	3830-63
4111	Fujitsu	MB4111	1468-106
	TeledyneP	4111	¶ 392-4
4112	Fujitsu	MB4112	1468-107
	IMI	G4112	4449-11
	Sanyo	LA4112	3318-51
41128	**Dense-Pac**	**DPE41128**	★ **4008** 3813-89
		DPS41128	★ **4008** 3845-111
4115	**Burr-Brown**	**4115/04**	★ **3152** 3398-100
4116	Fairchild	F4116-3	3826-68
		F4116-4	3826-82
	ITT	ITT4116-2	3826-56
		ITT4116-3	3826-69
		ITT4116-4	3826-83
	Mostek	MK4116	¶ 373-13 ¶ 383-14 ¶ 435-13 ¶ 438-2 ¶ 438-4 ¶ 440-5 ¶ 440-6 ¶ 441-9 ¶ 441-14
		MK4116-2	3826-57
		MK4116-3	3826-70
		MK4116-4	3826-84
		MKB4116-82	★ **694** 3826-58
		MKB4116-83	★ **694** 3826-71
		MKB4116-84	★ **694** 3826-85
		MKJ4116-93	3826-72
		MKJ4116-94	3826-86
	Motorola	MCM4116	¶ 437-16 ¶ 440-7 ¶ 440-8
	SGS	M4116	3826-61
	Siemens	HYB4116-3	3826-76
		HYB4116-4	3826-88
		HYB4116-P2	3826-62
		HYB4116-P3	3826-77
	Solitron	CM4116A	2824-71
		CM4116AE	2824-72
	TI	TMS4116	¶ 440-11
		TMS4116-15	★ **4187** ★ **4190** 3826-63
		TMS4116-20	★ **4187** ★ **4190** 3826-78
		TMS4116-25	★ **4187** ★ **4190** 3826-89
41192	**Dense-Pac**	**DPE41192**	★ **4008** 3813-93
		DPS41192	★ **4008** 3846-34
412	Hitachi	HMCS412AC	1405-43
		HMCS412C	1407-1
		HMCS412CL	1407-2
	National	LF412	3363-49
		LF412A	3362-23
	Siliconix	DF412	2876-81
	Siltronics	S412	3322-89
	Telefunken	U412	3318-76
4120	**Hughes**	**HHGA4120**	★ **683** 4447-31
		HVGA4120	★ **683** 4447-30
	Sanyo	LA4120	3318-187
41200	**RCA**	**PA41200**	★ **4742** 4454-19

Arranged alphanumerically from left to right.

Base Number	Source	Device	Page-Line
41221	NEC		
		IPD41221-70	3828-72
		IPD41221-90	3828-73
4125	Sanyo	LA4125	3318-188
		LA4125T	3318-189
41256	AT&T	M41256N-10	3828-88
		M41256N-12	3829-3
		M41256N-15	3829-37
		M41256P-10	3828-89
		M41256P-12	3829-4
		M41256P-15	3829-38
	Dense-Pac	**DPE41256**	★**4008**
			3813-96
		DPS41256	★**4008**
			3845-112
	NEC		
		IPD41256-12	3829-14
		IPD41256-15	3829-48
		IPD41256-20	3829-70
	OKI	**MSM41256-10**	★**4732**
			3828-96
		MSM41256-12	★**4732**
			3829-16
		MSM41256-15	★**4732**
			3829-51
	Panasonic	**MN41256-12**	★**1136**
			3829-18
		MN41256-15	★**1136**
			3829-53
	Samsung	KM41256-10	3828-98
		KM41256-12	3829-19
		KM41256-15	3829-54
	Toshiba	**TMM41256-12**	★**4263**
			3829-23
		TMM41256-15	★**4263**
			3829-59
41257	NEC		
		IPD41257-12	3829-15
		IPD41257-15	3829-49
		IPD41257-20	3829-71
	OKI	**MSM41257A-10**	
			★**4732**
			3828-97
		MSM41257A-12	
			★**4732**
			3829-17
		MSM41257A-15	
			★**4732**
			3829-52
	Samsung	**KM41257-10**	★**4140**
			3828-99
		KM41257-12	★**4140**
			3829-20
		KM41257-15	★**4140**
			3829-55
	Toshiba	**TMM41257-12**	★**4263**
			3829-24
		TMM41257-15	★**4263**
			3829-60
4126	Sanyo	LA4126	3318-52
41264	NEC		
		IPD41264-12	3827-118
		IPD41264-15	3828-2
4127	**Burr-Brown**	**4127**	★**3152**
			3307-12
4128	Samsung	KM4128-15	3828-58
41288	**Dense-Pac**	**DPE41288**	★**4008**
			3813-107
		DPS41288	★**4008**
			3847-102
413	National	COP413C	1407-29
		COP413CH	1407-30
		COP413L	1407-31
	Telefunken	U413B	3318-77
4130	TeledyneP	4130	¶ 393-20
4131	Burr-Brown	4131	3404-160
4132	Harris	RC4132	¶ 407-4
4136	Exar	XR4136	¶ 404-1
		XR4136C	3372-49
		XR4136M	3371-54
	Fairchild	μA4136C	3372-50
			(Continued)

Base Number	Source	Device	Page-Line
4136	Fairchild	μA4136M	3371-55
	MicroPwr	**MP4136**	★**3607**
			3371-56
		MP4136C	★**3607**
			3372-51
	PMI	**PM-4136**	★**3639**
	Raytheon	RC4136	3372-52
		RM4136	3371-57
	TI	**RM4136**	★ **719**
4137	NEC	MC4137	3378-21
	Sanyo	LA4137	3318-53
4138	NEC	MC4138	3378-22
	Sanyo	LA4138	3318-54
414	Ferranti	ZN414Z	3321-46
	Inmos	**IMST414**	★**1636**
			1439-10
		T414	1465-19
	Telefunken	U414	3322-43
4140	Sanyo	LA4140	3316-208
	TeledyneP	4140	2835-39
41416	NEC		
		IPD41416-12	3826-97
		IPD41416-15	3826-102
		IPD41416-20	3826-106
4143	Raytheon	RV4143	3327-138
	TeledyneP	4143	2835-40
4144	Raytheon	RV4144	3327-139
	TeledyneP	4144	2838-46
4145	TeledyneP	4145	2843-2
4146	TeledyneP	4146	2846-33
41464	NEC		
		IPD41464-10	3827-101
		IPD41464-12	3827-112
		IPD41464-15	3827-127
	OKI	**MSM41464-10**	★**4732**
			3827-102
		MSM41464-12	★**4732**
			3827-113
	Toshiba	**TMM41464-12**	★**4263**
			3827-115
		TMM41464-15	★**4263**
			3827-129
415	Barvon	BC415	4440-3
			4440-4
	Ferranti	ZN415E	3321-23
4151	**Exar**	**XR4151**	★**3561**
			3405-99
			¶ 422-17
	Raytheon	**RC4151**	★**3665**
			3405-113
			¶ 391-16
		RM4151	3405-116
	S-MOS	SMC4151F	1411-18
4152	**Raytheon**	**RC4152**	★**3665**
			3405-114
			¶ 391-16
		RM4152	3405-117
4153	**Raytheon**	**RC4153**	★**3665**
			3405-115
			¶ 391-16
		RM4153	3405-118
4156	Harris	HA-4156-5	3371-43
	Raytheon	RC4156	3371-44
		RM4156	3370-45
4157	Raytheon	RC4157	3370-49
		RM4157	3370-50
416	Ferranti	ZN416E	3321-24
	MicroInds	MIB416	2036-33
	NEC	μPD416-2	3826-74
		μPD416-3	3826-60
		μPD416-5	3826-51
	Siltronics	S416	891-111
	Telefunken	U416	3321-102
		U416B	¶ 415-3
	Toshiba	TMM416-2	3826-64
		TMM416-3	3826-79
		TMM416-4	3826-90
4160	IMI	G4160	4449-12
	SSS	BCL4160B	815-21
		SCL4160B	815-22
4161	SSS	BCL4161B	812-32
		SCL4161B	812-33
			(Continued)

Base Number	Source	Device	Page-Line
4161	**TI**	**SMJ4161-15**	★ **726**
			3827-94
		SMJ4161-20	★ **726**
			3827-96
		TMS4161	¶ 437-8
			¶ 437-12
			¶ 438-18
			¶ 439-6
			¶ 440-2
			¶ 441-2
			¶ 441-12
		TMS4161-15	★ **726**
			★**4182**
			3827-95
		TMS4161-20	★ **726**
			★**4182**
			3827-97
4161EP5			
	TI	**TM4161EP5-15**	★**4203**
			3828-20
		TM4161EP5-20	★**4203**
			3828-22
4161EV4			
	TI	**TM4161EV4-15**	★**4202**
			3828-16
		TM4161EV4-200	
			★**4202**
			3828-17
4161GW4			
	TI	**TM4161GW4-15**	
			★**4204**
			3827-130
		TM4161GW4-20	
			★**4204**
			3828-12
4161GY4			
	TI	**TM4161GY4-15**	★**4204**
			3827-131
		TM4161GY4-20	★**4204**
			3828-13
4162	SSS	BCL4162B	814-155
		SCL4162B	814-156
4163	SSS	BCL4163B	811-168
		SCL4163B	811-169
4164	**Dense-Pac**	**DPE4164**	★**4008**
			3813-20
		DPS4164	★**4008**
			3843-28
	Fairchild	F4164-20	3827-72
	Motorola	**MCM4164B-15**	★**4118**
			3827-59
	National	NMC4164	¶ 438-16
		NMC4164-12	3827-34
		NMC4164-15	3827-61
		NMC4164-20	3827-82
	NEC	μPD4164-10	3827-17
		μPD4164-12	3827-35
		μPD4164-15	3827-62
		μPD4164-20	3827-83
	Panasonic	MN4164-15	3827-64
		MN4164-20	3827-85
	Samsung	KM4164-12	3827-106
		KM4164-15	3827-123
		KM4164A-12	3827-37
		KM4164A-15	3827-65
		KM4164A-20	3827-86
		KM4164B-12	3827-38
		KM4164B-15	3827-66
	Siemens	HYB4164-2	3827-67
		HYB4164-3	3827-87
	TI	**SMJ4164-12**	★ **726**
			3827-39
		SMJ4164-15	★ **726**
			3827-68
		SMJ4164-20	★ **726**
			3827-88
		TMS4164	¶ 437-11
			¶ 437-13
			¶ 437-14
			¶ 440-11
			¶ 440-12
			¶ 440-13
			¶ 440-14
			¶ 440-18
		TMS4164-12	★ **726**
			★**4186**
			(Continued)

Base Number	Source	Device	Page-Line
4164	TI	TMS4164-12	3827-40
		TMS4164-15	★ **726**
			★**4186**
			3827-69
		TMS4164-20	★ **726**
			★**4186**
			3827-89
		TMS4164A	¶ 440-15
	ThomsonCSF	TS4164-15	3827-70
		TS4164-20	3827-90
	Toshiba	**TMM4164-2**	★**4263**
			3827-41
		TMM4164-3	★**4263**
			3827-71
		TMM4164-4	★**4263**
			3827-91
4164EC4			
	TI	**TM4164EC4-12**	★**4206**
			3827-105
		TM4164EC4-15	★**4206**
			3827-122
		TM4164EC4-20	★**4206**
			3828-7
4164EL9			
	TI	**TM4164EL9-12**	★**4205**
			3828-43
		TM4164EL9-15	★**4205**
			3828-46
		TM4164EL9-20	★**4205**
			3828-51
4164EQ5			
	TI	**TM4164EQ5-12**	★**4207**
			3828-18
		TM4164EQ5-15	★**4207**
			3828-19
		TM4164EQ5-20	★**4207**
			3828-21
4164EV4			
	TI	TM4164EV4-15	3828-3
		TM4164EV4-20	3828-14
4164FL8			
	TI	**TM4164FL8-12**	★**4208**
			3828-25
		TM4164FL8-15	★**4208**
			3828-32
		TM4164FL8-20	★**4208**
			3828-38
4164FM8			
	TI	**TM4164FM8-12**	
			★**4208**
			3828-26
		TM4164FM8-15	
			★**4208**
			3828-33
		TM4164FM8-20	
			★**4208**
			3828-39
4164FM9			
	TI	**TM4164FM9-12**	
			★**4205**
			3828-44
		TM4164FM9-15	
			★**4205**
			3828-47
		TM4164FM9-20	
			★**4205**
			3828-52
4168	NEC	μPD4168-15	3826-39
		μPD4168-20	3826-41
		μPD4168-25	3826-42
417	Telefunken	U417	3321-103
		U417B	¶ 415-3
4170	S-MOS	SMC4170F	1411-19
	Sanyo	LA4170	3316-63
4173	Sharp	LR4173	3378-134
4174	Sharp	LR4174	3378-135
	SSS	BCL4174B	821-43
		SCL4174B	821-44
4175	Sanyo	LA4175	3316-64
4177	Sanyo	LA4177	3316-65
418	Telefunken	U418	3321-104
		U418B	¶ 415-3
4180	Sanyo	LA4180	3318-55
	Telefunken	TDA4180	3306-70
		TDA4180P	¶ 420-11
4182	Sanyo	LA4182	3318-56

¶ Indicates page number in Application Note Directory.
★ Indicates additional data is provided on the page noted.

Base Number	Source	Device	Page-Line
41832	NEC		
		IPD41832-12	3826-113
		IPD41832-15	3827-3
4190	SGS	TDA4190	3326-60
4191	**Raytheon**	**RC4191**	★**3658**
			3396-43
		RM4191	3396-47
4192	**Raytheon**	**RC4192**	★**3658**
			3396-44
		RM4192	3396-48
	SSS	BCL4192B	815-76
		SCL4192B	815-78
4193	Maxim	MAX4193	3396-11
	Raytheon	**RC4193**	★**3658**
			3396-45
			¶ 426-5
		RM4193	3396-49
	SSS	BCL4193B	812-110
		SCL4193B	812-112
4194	Exar	XR4194M	3395-54
	MCE	MCE4194	3395-55
	Raytheon	RC4194	3395-56
		RM4194	3395-57
4195	Exar	XR4195	3392-84
	Raytheon	RC4195	3392-87
		RM4195	3392-88
42	**Burr-Brown**	**VFC42**	★**3148**
			3405-92
		VFC42M	★**3148**
			3405-93
	FujitsuA	**FBM42DA**	★**4017**
			3826-12
	Hitachi	HMSC42C	1451-56
	TeledyneC	CAG42	2823-10
420	Barvon	BC420	4440-8
			4440-9
	Maxim	MAX420	3335-4
	Motorola	**MVME420**	★**2112**
			2044-44
	National	COP420	1451-7
			1407-32
		COP420L	1451-8
			1409-1
		COP420R	1450-116
			1450-120
			¶ 365-10
			1409-2
	PMI	**OP-420B**	★**3636**
			★**3639**
			3333-16
			3334-195
		OP-420C	★**3636**
			★**3639**
			3333-17
			3334-196
		OP-420F	★**3636**
			★**3639**
			3333-18
			3334-197
		OP-420G	★**3636**
			★**3639**
			3333-19
			3334-198
	Telefunken	U420	3318-78
4200	**Raytheon**	**RC4200**	★**3650**
			3401-15
			¶ 422-10
		RC4200A	★**3650**
			3401-16
	Sanyo	LA4200	3318-57
	Siemens	TDA4200	3321-141
	Telefunken	U4200	3324-41
	Western	WD4200	1411-3
4201	Burr-Brown	ST4201-1	2042-14
		ST4201-2	2042-15
		ST4201-3	2042-13
	Sanyo	LA4201	3318-58
	Siemens	TLE4201	2895-83
4202	Burr-Brown	ST4202-0	2042-9
		ST4202-1	2042-11
		ST4202-2	2042-10
	Exar	XR4202	3334-69
			¶ 404-1
		XR4202M	3334-70
	Sprague	**UCN-4202A**	★**3269**
			(Continued)

Base Number	Source	Device	Page-Line
4202	Sprague	UCN-4202A	2896-32
			¶ 397-10
			¶ 398-10
4203	**Burr-Brown**	**4203**	★**3151**
			3400-152
		4203S	★**3151**
			3400-153
		ST4203-16	2042-8
		ST4203-32	2042-19
		ST4203-48	2042-21
		ST4203-65	2042-22
	Sprague	**UCN-4203A**	★**3269**
			2896-33
4204	**Burr-Brown**	**4204**	★**3151**
			3400-154
		4204S	★**3151**
			3400-155
	Fujitsu	MB4204	3316-15
	National	MM4204	¶ 436-14
	Sprague	**UCN-4204B**	★**3269**
			2896-34
	TI	TCM4204	3381-74
4205	**Burr-Brown**	**4205**	★**3151**
			3401-1
		4205S	★**3151**
			3401-2
	Sprague	**UCN-4205B**	★**3269**
			2896-35
	TI	TCM4205	3381-75
42050	Micropac	42050-055	3385-59
		42050-109	3386-106
		42050-128	3387-96
		42050-148	3387-108
		42050-158	3388-87
		42050-168	3388-91
		42050-188	3389-20
		42050-208	3389-49
		42050-224	3389-51
		42050-244	3389-113
		42050-264	3389-115
		42050-284	3389-117
		42050-304	3389-119
		42050-324	3389-120
		42050-344	3389-121
		42050-510	3385-67
		42050-610	3385-125
		42050-710	3386-1
42051	Micropac	42051	3392-74
		42051-055	3390-66
		42051-065	3390-99
		42051-075	3390-102
		42051-085	3390-125
		42051-095	3390-129
		42051-105	3391-6
		42051-124	3391-69
		42051-144	3391-70
		42051-154	3392-1
		42051-164	3392-5
		42051-184	3392-29
		42051-204	3392-46
		42051-223	3392-47
		42051-243	3392-61
		42051-263	3392-62
		42051-283	3392-63
		42051-303	3392-64
		42051-323	3392-65
		42051-363	3392-66
42055	Micropac	42055-1020	3386-107
		42055-1216	3387-100
		42055-1416	3387-109
		42055-1516	3388-90
		42055-1612	3388-92
		42055-1812	3389-21
		42055-2010	3389-50
		42055-2210	3389-52
		42055-2410	3389-114
		42055-2608	3389-116
		42055-2808	3389-118
		42055-520	3385-71
		42055-620	3385-126
		42055-720	3386-2
		42055-820	3386-71
		42055-920	3386-87
	Toshiba	42055-1812	3389-22
4206	**Burr-Brown**	**4206**	★**3151**
			3401-3

Base Number	Source	Device	Page-Line
4207	TI	TCM4207	3381-76
4209	Siemens	SAB4209	3323-57
421	Maxim	MAX421	3335-5
	National	CIM-421	2030-19
		COP421	1451-9
		COP421L	1451-10
	PMI	**OP-421B**	★**3636**
			3370-16
		OP-421C	★**3636**
			3370-53
		OP-421F	★**3636**
			3370-17
		OP-421G	★**3636**
			3370-54
		OP-421H	★**3636**
			3372-43
	Siliconix	421 Series	¶ 406-4
	Xylogics	421	2034-32
4210	Western	WD4210	1411-4
4211	Siemens	SDA4211	3325-92
4212	Exar	XR4212	3319-74
		XR4212C	3372-46
		XR4212M	3371-50
	Siemens	SDA4212	3325-88
4213	**Burr-Brown**	**4213**	★**3151**
			★**3153**
			3401-4
		4213S	★**3151**
			★**3153**
			3401-5
		4213U	★**3151**
			★**3153**
			3401-6
		4213V	★**3151**
			★**3153**
			3401-7
		4213W	★**3151**
			★**3153**
			3401-8
	Siemens	SDA4213	3325-87
4214	**Burr-Brown**	**4214**	★**3151**
			3401-9
		4214M	★**3151**
			3401-10
422	Maxim	MAX422	3335-6
	National	LF422A	3362-18
	Xylogics	422	2034-30
4220	IMI	G4220	4449-13
	Sanyo	LA4220	3318-59
	Toshiba	BM4220	1821-20
423	Ferranti	ZN423	3402-29
	Maxim	MAX423	3335-7
	Xylogics	423	2034-31
4230	Sanyo	LA4230	3316-209
424	Ferranti	ZN424	3355-55
			¶ 405-13
	National	COP424C	1409-3
4240	**Toshiba**	**TMP4240**	★**1750**
4244	AMD	AM4244C	3840-85
42468	Motorola	SC42468	2892-2
425	Ferranti	ZN425	¶ 387-10
		ZN425E-8	2855-7
		ZN425J-8	2855-8
	Fujitsu	MB425	1456-112
	National	COP425C	1409-4
4250	National	LM4250	3347-16
			3334-31
			3346-204
		LM4250C	3347-17
			3334-32
			3352-32
	NEC	μPC4250	3334-47
		μPC4250C	3355-15
	Panasonic	AN4250	3355-13
	Sanyo	LA4250	3316-210
	Solitron	UC4250	3347-19
			3346-205
		UC4250C	3347-20
			3352-33
	Toshiba	**TMP4250**	★**1750**
4256	**Dense-Pac**	**DPD4256**	★**4008**
			3828-87
	TI	**SMJ4256-15**	★ **726**
			3829-56
		SMJ4256-20	★ **726**
			3829-73
			(Continued)

Base Number	Source	Device	Page-Line
4256	TI	TMS4256	¶ 437-17
			¶ 438-7
			¶ 440-16
		TMS4256-12	★ **726**
			★**4180**
			3829-21
		TMS4256-15	★ **726**
			★**4180**
			3829-57
		TMS4256-20	★ **726**
			★**4180**
			3829-74
42568	**Dense-Pac**	**DPD42568**	★**4008**
			3829-102
42569	**Dense-Pac**	**DPD42569**	★**4008**
			3830-8
4256EC4			
	TI	**TM4256EC4-12**	★**4193**
			3829-87
		TM4256EC4-15	★**4193**
			3829-94
		TM4256EC4-20	★**4193**
			3829-96
4256EL9			
	TI	**TM4256EL9-12**	★**4191**
			3830-10
		TM4256EL9-15	★**4191**
			3830-18
		TM4256EL9-20	★**4191**
			3830-26
4256EQ5			
	TI	**TM4256EQ5-12**	★**4194**
			3826-15
		TM4256EQ5-15	★**4194**
			3826-16
		TM4256EQ5-20	★**4194**
			3826-17
4256FC1			
	TI	**TM4256FC1-15**	★**4195**
			3830-69
		TM4256FC1-20	★**4195**
			3830-73
4256FL8			
	TI	**TM4256FL8-12**	★**4196**
			3829-103
		TM4256FL8-15	★**4196**
			3829-110
		TM4256FL8-20	★**4196**
			3830-1
4256GP8			
	TI	**TM4256GP8-12**	★**4201**
			3829-104
		TM4256GP8-15	★**4201**
			3829-111
		TM4256GP8-20	★**4201**
			3830-2
4256GP9			
	TI	**TM4256GP9-12**	★**4200**
			3830-11
		TM4256GP9-15	★**4200**
			3830-19
		TM4256GP9-20	★**4200**
			3830-27
4256GU8			
	TI	**TM4256GU8-12**	
			★**4196**
			3826-18
		TM4256GU8-15	
			★**4196**
			3826-19
		TM4256GU8-20	
			★**4196**
			3826-20
4256GU9			
	TI	**TM4256GU9-12**	
			★**4191**
			3826-21
		TM4256GU9-15	
			★**4191**
			3826-22
		TM4256GU9-20	
			★**4191**
			3826-23
4256GV8			
	TI	**TM4256GV8-12**	★**4201**
			3829-105
		TM4256GV8-15	★**4201**
			(Continued)

Arranged alphanumerically from left to right.

PART NUMBER INDEX

Base Number	Source	Device	Page-Line
4256GV8			
	TI	TM4256GV8-15	3829-112
		TM4256GV8-20	★ **4201**
			3830-3
4256GV9			
	TI	**TM4256GV9-12**	★ **4200**
			3830-12
		TM4256GV9-15	★ **4200**
			3830-20
		TM4256GV9-20	★ **4200**
			3830-28
4256HE4			
	TI	**TM4256HE4-12**	★ **4197**
			3826-24
		TM4256HE4-15	★ **4197**
			3826-25
		TM4256HE4-20	★ **4197**
			3826-26
4257	TI	4257	¶ 438-7
			¶ 440-16
		TMS4257-12	★ **4180**
			3829-22
		TMS4257-15	★ **4180**
			3829-58
		TMS4257-20	★ **4180**
			3829-75
4257EC4			
	TI	**TM4257EC4-12**	★ **4193**
			3829-88
		TM4257EC4-15	★ **4193**
			3829-95
		TM4257EC4-20	★ **4193**
			3829-97
4257EL9			
	TI	**TM4257EL9-12**	★ **4191**
			3830-13
		TM4257EL9-15	★ **4191**
			3830-21
		TM4257EL9-20	★ **4191**
			3830-29
4257EQ5			
	TI	**TM4257EQ5-12**	★ **4194**
			3829-99
		TM4257EQ5-15	★ **4194**
			3829-100
		TM4257EQ5-20	★ **4194**
			3829-101
4257FC1			
	TI	**TM4257FC1-12**	★ **4195**
			3830-59
		TM4257FC1-15	★ **4195**
			3830-70
		TM4257FC1-20	★ **4195**
			3830-74
4257FL8			
	TI	**TM4257FL8-12**	★ **4196**
			3829-106
		TM4257FL8-15	★ **4196**
			3829-113
		TM4257FL8-20	★ **4196**
			3830-4
4257G48			
	TI	TM4257G48-12	3829-107
		TM4257G48-15	3829-114
		TM4257G48-20	3830-5
4257G49			
	TI	TM4257G49-12	3830-14
		TM4257G49-15	3830-22
		TM4257G49-20	3830-30
4257GU8			
	TI	**TM4257GU8**	★ **4196**
4257GU9			
	TI	**TM4257GU9**	★ **4191**
42584	Motorola	SC42584	2892-4
42585	Motorola	SC42585	2892-5
426	Ferranti	ZN426E-8	2853-15
		ZN426J-8	2853-16
	Fujitsu	MB426	1456-113
	National	COP426C	1409-5
	NEC	μPB426	3817-38
		μPB426-1	3817-30
		μPB426-2	3817-15
		μPB426-3	3816-96
	TeledyneS	TSC426	2897-129
			¶ 355-11
4260	**Toshiba**	**TMP4260**	★ **1750**
4264	IMI	G4264	4449-14
	MicronTech	MT4264-12	3827-31
		MT4264-15	3827-54
		MT4264-20	3827-77
	NEC	MC4264	3379-61
4265	NEC	μPD4265-12	3827-22
		μPD4265-15	3827-44
427	**Datel**	**AM-427-A**	★ **3163**
			3339-33
		AM-427-B	★ **3163**
			3337-12
	Ferranti	ZN427	¶ 389-11
			¶ 391-5
		ZN427E-8	2834-41
		ZN427J-8	2834-42
	TeledyneS	TSC427	2897-130
			¶ 355-11
	Telefunken	U427	3322-159
		U427B	¶ 381-5
			¶ 420-4
	TI	**SN427**	★ **712**
4270	**Toshiba**	**TMP4270**	★ **1750**
428	Ferranti	ZN428	¶ 389-11
			¶ 391-5
		ZN428E-8	2853-12
		ZN428J-8	2853-13
	Intel	iSBC428	2032-7
	TeledyneS	TSC428	2897-131
			¶ 355-11
	Telefunken	U428	3322-160
4282	Siemens	TDA4282	3327-58
42832	NEC		
		IPD42832-12	3826-111
		IPD42832-15	3827-1
429	Ferranti	ZN429E-8	2853-17
		ZN429J-8	2853-18
	NEC	μPB429-1	3819-37
		μPB429-2	3819-22
		μPB429-3	3818-118
4290	NEC	MC4290	1469-34
	Siemens	TDA4290-5	3316-118
429C01	LogicDev	L429C01	844-90
		L429C01C	807-9
		L429C01M	807-10
42C40	**Toshiba**	**TMP42C40**	★ **1750**
42C50	**Toshiba**	**TMP42C50**	★ **1750**
42C60	**Toshiba**	**TMP42C60**	★ **1750**
42C70	**Toshiba**	**TMP42C70**	★ **1750**
43	**FujitsuA**	**FBM43CA**	★ **4017**
			2046-30
		FBM43DA	★ **4017**
			3826-11
	PMI	**OP-43**	★ **3636**
	Toshiba	TLCS-43	1451-74
430	**Datel**	**AM-430**	★ **3163**
			3330-140
		AM-430A	★ **3163**
			3343-39
		AM-430B	★ **3163**
			3341-20
			3340-61
	National	COP430	1451-50
4300	AMCC	Q4300C	4439-14
	Motorola	MC4300	877-119
			2899-1
	Signetics	**PM4300**	★ **3728**
	Toshiba	TMP4300C	1411-1
4301	**Burr-Brown**	**4301**	★ **3152**
			3400-117
			¶ 422-11
4302	**Burr-Brown**	**4302**	★ **3152**
			3400-118
		ST4302	2041-9
4303	Burr-Brown	ST4303-16	2039-43
		ST4303-24	2039-44
		ST4303-32	2039-45
		ST4303-8	2039-46
4304	Burr-Brown	ST4304	2040-64
	Motorola	MC4304	876-151
			3831-3
4305	Burr-Brown	ST4305	2039-49
	Motorola	MC4305	876-152
			3831-4
4306	Burr-Brown	ST4306	2041-34
	Motorola	MC4306	862-73
4307	Motorola	MC4307	863-2
	National	NSM4307	2876-94
4308	Motorola	MC4308	888-124
431	Fairchild	μA431AC	3393-64
	Motorola	**TL431C**	★ **3628**
			3393-65
		TL431M	★ **3628**
			3393-66
	National	COP431	1451-51
	TI	**TL431**	★ **720**
4310	Motorola	MC4310	887-97
4311	Burr-Brown	ST4311	2040-38
	NEC	μPD4311-35	3844-18
		μPD4311-45	3844-34
		μPD4311-55	3844-51
43115	Hitachi	HD43115	3320-50
4312	IMI	G4312	4449-16
	Motorola	MC4312	881-65
			3854-114
4314	NEC	μPD4314-35	3841-27
		μPD4314-45	3841-67
		μPD4314-55	3842-7
4315	Burr-Brown	ST4315	2039-11
4316	Fujitsu	MB4316	2894-20
			1466-88
	Motorola	MC4316	862-40
			¶ 423-6
4317	Motorola	MC4317	862-41
4318	Motorola	MC4318	862-34
4319	Motorola	MC4319	862-35
432	Ferranti	ZN432	¶ 391-6
		ZN432BJ-10	2838-35
		ZN432CJ-10	2838-36
		ZN432E-10	2838-37
		ZN432J-10	2838-38
	National	COP432	1451-52
	Sprague	UHC/D-432	864-59
			2898-108
		UHP-432	★ **3269**
			864-63
			2898-112
4320	Mitel	MT4320	3378-77
	Plessey	MV4320	3378-95
	TI	TP4320A	833-157
	Western	WD4320	1411-5
4321	Motorola	MC4321	854-40
	Western	WD4321	1411-6
4322	Mitel	MT4322	3378-78
	Motorola	MC4322	854-41
	Plessey	MV4322	3378-96
4323	Mitel	MT4323	3378-79
	Plessey	MV4323	3378-97
4324	Motorola	MC4324	881-8
			¶ 423-6
			3376-46
4325	Mitel	MT4325	3378-80
	Plessey	MV4325	3378-98
43256	NEC		
		IPD43256-10	3846-82
		μPD43256-10L	3846-83
		IPD43256-12	3846-84
		μPD43256-12L	3846-85
		IPD43256-15	3846-86
		μPD43256-15L	3846-87
4326	Mitel	MT4326	3378-81
	Plessey	MV4326	3378-99
4327	Plessey	MV4327	3378-100
4328	**Dense-Pac**	**DPE4328**	★ **4008**
			3813-97
		DPS4328	★ **4008**
			3846-55
433	Ferranti	ZN433BJ-10	2838-10
		ZN433CJ-10	2838-11
		ZN433J-10	2838-12
	Sanyo	STK433	3318-157
	Sprague	UHC/D-433	864-60
			2898-109
		UHP-433	★ **3269**
			864-64
			2898-113
4330	Mitel	MD4330B	837-3
			2877-93
			3856-116
	Plessey	MV4330	837-4
4331	Siemens	TBB4331	3374-5
4332	Mitel	MD4332B	837-9
	Mostek	MK4332	¶ 440-6
		MK4332D-3	3826-109
	Plessey	MV4332	837-10
	Sanyo	STK4332	3316-216
4335	Siemens	TBE4335	3374-6
4337	**Signetics**	**PM4337**	★ **3728**
434	Ferranti	ZN434	843-143
		ZN434E	2849-1
	National	COP434	1451-53
4340	**Burr-Brown**	**4340**	★ **3152**
			3403-145
4341	**Burr-Brown**	**4341**	★ **3152**
			3403-146
4344	Motorola	MC4344	887-64
			¶ 423-6
			3375-70
435	Ferranti	ZN435E	2855-9
		ZN435J	2855-10
	Motorola	**MVME435**	★ **2112**
			2044-41
	Sanyo	STK435	3318-158
4350	Motorola	MC4350	862-49
	TeledyneP	4350	¶ 409-14
			¶ 409-17
4351	TeledyneP	4351	¶ 409-14
			¶ 409-15
			¶ 409-16
			¶ 409-17
435101	Hitachi	HM435101-1	3833-107
4352	Sanyo	STK4352	3316-217
4355	Motorola	MC4355	860-56
4356	Motorola	MC4356	854-3
436	Ferranti	ZN436E	2850-3
		ZN436J	2850-4
4361	NEC	μPD4361-40	3847-1
		μPD4361-45	3847-2
		μPD4361-55	3847-20
		μPD4361-70	3847-42
4362	NEC	μPD4362-45	3845-3
		μPD4362-55	3845-35
		μPD4362-70	3845-62
	Sanyo	STK4362	3316-218
	TeledyneP	4362	¶ 409-14
			¶ 409-17
4363	TeledyneP	4363	¶ 409-14
			¶ 409-17
4364	IMI	G4364	4449-17
	NEC	μPD4364-12	3843-39
		IPD4364-12L	3843-40
		μPD4364-12LL	3843-41
		μPD4364-15	3843-63
		IPD4364-15L	3843-64
		μPD4364-15LL	3843-65
		μPD4364-20	3843-88
		IPD4364-20L	3843-89
		μPD4364-20LL	3843-90
437	Sanyo	STK437	3318-200
4372	Sanyo	STK4372	3318-128
438	National	COP438	1451-54
43890	Hitachi	HD43890	3320-51
439	Sanyo	STK439	3318-201
4391	Maxim	MAX4391	3396-12
	Raytheon	**RC4391**	★ **3642**
			3396-46
			¶ 426-5
		RM4391	3396-50
4392	Sanyo	STK4392	3318-129
4394	Burr-Brown	ST4394	2017-11
			2040-40
44	Hitachi	HMCS44C	1407-3
		HMCS44CL	1407-4
	Intel	iRCB44/10	2005-29
	NCR	ADP-44	2038-46
			(Continued)

¶ Indicates page number in Application Note Directory.
★ Indicates additional data is provided on the page noted.

Base Number	Source	Device	Page-Line
44	**Wintek**	**MDS44**	★**2118**
			2037-14
440	Ferranti	ZN440CJ	2832-26
	Fujitsu	**C440H**	★**4624**
			4444-43
		C440HB	★**4624**
			4444-44
	National	COP440	1451-11
			¶ 365-11
			1409-6
		COP440R	1450-117
			1450-121
			1409-7
		TDA440	3327-30
	Plessey	SL440	2896-4
			¶ 424-11
		TDA440	3327-36
	SGS	TDA440S	3327-49
	Siemens	TCA440	3321-34
	SiliconSys	SSI440	1459-4
			1457-157
			1467-38
	Telefunken	TDA440	3327-76
	TI	TAC440H	4456-13
4400	Telefunken	TDA4400	3327-77
44007	Hitachi	HD44007	3324-65
		HD44007A	3326-99
440072	Hitachi	HD440072	3326-98
4401	Sprague	UCS-4401H	2894-8
			2898-60
			¶ 398-6
44010	Hitachi	HD44010	3320-88
4402	Burr-Brown	ST4402	2041-44
	Solitron	883/4402B	828-11
		SCL4402B	828-14
	SSS	BCL4402B	828-150
		SCL4402A	¶ 353-12
		SCL4402B	828-151
4404	FujitsuA	FBM-4404P	2046-27
	SSS	BCL4404B	813-116
		SCL4404B	813-117
4409	Toko	KB4409	3322-76
441	Ferranti	ZN441CJ	2832-27
	National	COP441	1451-12
			1409-8
		LF441	3352-7
		LF441A	3342-24
	Sanyo	STK441	3318-202
	SiliconSys	**SSI441**	★**3736**
			2892-20
			1467-65
	TI	**TL441M**	★ **720**
			3307-16
4410	Telefunken	TDA4410	3327-78
441024	AT&T	M441024K-15	3829-89
		M441024P-15	3829-90
4411	Burr-Brown	ST4411	2039-3
4412	SSS	BCL4412B	824-170
		SCL4412A	¶ 353-12
		SCL4412B	824-171
4416	SSS	SCL4416B	2824-41
	TI	**SMJ4416-12**	★ **726**
			3826-98
		SMJ4416-15	★ **726**
			3826-103
		SMJ4416-20	★ **726**
			3826-107
		TMS4416	¶ 431-18
			¶ 440-14
			¶ 440-15
			¶ 440-17
			¶ 440-18
			¶ 440-19
		TMS4416-12	★**4185**
			3826-99
		TMS4416-15	★**4185**
			3826-104
			¶ 440-21
		TMS4416-20	★**4185**
			3826-108
4419	Toko	TK4419A	3321-107
442	National	COP442	1451-13
			1409-9
		LF442	3333-25
			3365-10
			(Continued)

Base Number	Source	Device	Page-Line
442	National	LF442A	3333-23
			3362-19
4420	IMI	G4420	4449-19
	Sanyo	LA4420	3316-211
	SGS	TDA4420	3327-50
	Toko	KB4420B	3322-96
4421	Burr-Brown	ST4421	2041-54
	Telefunken	TDA4421	3327-79
4422	Sanyo	LA4422	3316-212
4423	**Burr-Brown**	**4423**	★**3152**
			3401-25
44231	GouldAMI	S44231	3377-77
	Hitachi	HD44231C	3377-61
44232	GouldAMI	S44232	3377-114
	Hitachi	HD44232C	3377-122
44233	GouldAMI	S44233	3377-74
	Hitachi	HD44233C	3377-62
44234	GouldAMI	S44234	3377-112
	Hitachi	HD44234C	3377-123
44235	Hitachi	HD44235C	3377-63
44236	Hitachi	HD44236C	3377-124
44237	Hitachi	HD44237C	3377-64
44238	Hitachi	HD44238C	3377-125
4424	Toko	KB4424A	3322-77
44256	**Dense-Pac**	**DPD44256**	★**4008**
			3829-82
4426	SSS	BCL4426AB	814-53
		SCL4426AB	814-55
	Telefunken	TDA4426	3327-80
4427	Telefunken	TDA4427	3327-81
4428	SSS	BCL4428B	817-173
		SCL4428B	817-174
	Telefunken	TDA4428	3327-82
443	Sanyo	STK443	3318-159
4430	Sanyo	LA4430	3318-60
	Telefunken	TDA4430	3327-83
4431	SGS	TDA4431	3325-71
	Telefunken	TDA4431	3327-84
4432	Telefunken	TDA4432	3327-85
4433	SGS	TDA4433	3327-51
	SSS	BCL4433AB	816-142
		SCL4433AB	814-68
4436	Toko	KB4436	3321-120
4437	Toko	KB4437	3322-78
444	Brooktree	BT444	2849-6
			1465-108
	Intech	VDAC444	1466-40
		VDAC444E	843-145
			2849-16
		VDAC444T	843-136
			2849-2
	National	COP444C	1409-10
		COP444L	1451-14
			¶ 365-11
			1409-11
		COP444LR	1450-118
			1450-122
			¶ 365-10
			1409-12
		LF444	3373-25
		LF444A	3371-16
	Sprague	**UHP-444**	★**3269**
4440	Sanyo	LA4440	3316-213
	Telefunken	TDA4440	3327-86
	ThomsonCSF	EF4440	¶ 371-1
4441	SSS	BCL4441UB	808-106
		SCL4441UB	808-107
4442	Telefunken	TDA4442	3327-87
	ThomsonCSF	EF4442	¶ 371-1
4443	ThomsonCSF	EF4443	2896-11
4444	Raytheon	RC4444	2829-19
			3378-3
		RM4444	2829-20
			3378-4
4445	SSS	BCL4445B	834-133
		SCL4445B	834-134
	Telefunken	TDA4445	3326-90
4446	SSS	BCL4446B	837-128
		SCL4446B	837-130
			¶ 423-12
			3375-63
4448	Toko	KB4448	3322-79
4449	SSS	BCL4449UB	811-74
		SCL4449UB	811-76
445	Dionics	DI445	2894-27
	National	COP445C	1409-13
			(Continued)

Base Number	Source	Device	Page-Line
445	National	COP445L	1451-15
			1409-14
	Plessey	SL445A	3401-87
4450	Telefunken	TDA4450	3327-88
4454	Toko	KB4454	3321-105
446	Dionics	DI446	2894-31
	NEC	μPD446	3839-50
		μPD446-1	3839-31
		μPD446-2	3838-115
		μPD446-3	3838-70
	Telefunken	U446	3307-54
4460	Sanyo	LA4460	3318-103
4461	Sanyo	LA4461	3318-104
4464	**Dense-Pac**	**DPD4464**	★**4008**
			3827-99
	NEC	μPD4464-15	3843-66
		IPD4464-15L	3843-67
		μPD4464-20	3843-91
		IPD4464-20L	3843-92
	TI	**SMJ4464**	★ **726**
		TMS4464	¶ 442-20
		TMS4464-12	★ **726**
			★**4181**
			3827-114
		TMS4464-15	★ **726**
			★**4181**
			3827-128
		TMS4464-20	★ **726**
			★**4181**
			3828-11
4464LU8			
	TI	**TM4464LU8-12**	
			★**4199**
			3828-27
		TM4464LU8-15	
			★**4199**
			3828-34
447	Ferranti	ZN447E	2833-16
44790	Hitachi	HD44790	1451-55
			1405-34
448	Ferranti	ZN448E	2834-35
		ZN448J	2834-36
4480	IMI	G4480	4449-20
449	Ferranti	ZN449E	2836-40
		ZN449J	2836-41
	NEC	μPD449	3839-51
		μPD449-1	3839-32
		μPD449-2	3838-116
		μPD449-3	3838-71
44C256	**TI**	**TMX44C256-10**	★**4189**
			3829-79
		TMX44C256-12	★**4189**
			3829-84
		TMX44C256-15	★**4189**
			3829-91
44C257	**TI**	**TMX44C257-10**	★**4189**
			3829-80
		TMX44C257-12	★**4189**
			3829-85
		TMX44C257-15	★**4189**
			3829-92
44C259	**TI**	**TMX44C259-10**	★**4189**
			3829-81
		TMX44C259-12	★**4189**
			3829-86
		TMX44C259-15	★**4189**
			3829-93
45	Fairchild	PEP-45	2023-28
	Hitachi	HMCS45C	1407-5
		HMCS45CL	1407-6
	TeledyneC	CAG45A	2823-11
	Wintek	**MCL45**	★**2118**
			2005-31
		MCV45	★**2118**
			2005-32
450	ArrayTech	DHS450	4439-19
	Brooktree	BT450	2849-8
			1466-3
	Burr-Brown	CS450	1811-7
	Cherry	CS450	3400-75
		IC450	3355-26
	Datel	**AM-450-2**	★**3163**
			3356-50
	Ferranti	ZN450	2848-42
			(Continued)

Base Number	Source	Device	Page-Line
450	Intersil	MM450	2828-89
	National	MM450	¶ 401-13
	NEC	μPB450	4473-82
	TeledyneS	TSC450C	2897-132
		TSC450M	2897-133
	Xylogics	450	2034-23
4500	**Motorola**	**TCA4500A**	★**3614**
			3322-111
	National	LM4500A	3322-115
	Plessey	CLA4500	4453-41
	Siemens	TCA4500A	3322-134
	Signetics	TDA4500	3326-29
	TI	4500A	¶ 372-13
		TMS4500A	★**1328**
			2892-77
			¶ 372-11
			¶ 372-12
			¶ 372-14
			¶ 372-15
			¶ 432-1
			¶ 432-2
			¶ 432-3
			¶ 440-19
		TMS4500A-15	★**1328**
			2892-78
		TMS4500A-20	★**1328**
			2892-79
		TMS4500A-25	★**1328**
			2892-80
	VTI	**VL4500A**	★**1751**
			★**1752**
			★**1754**
			2892-81
4501	**Mostek**	**MK4501-12**	★**4114**
			3810-7
		MK4501-15	★**4114**
			3809-126
		MK4501-20	★**4114**
			3809-125
		MKB4501-81	3810-8
		MKB4501-82	3809-127
	National	CD4501BC	2830-115
		CD4501BM	2830-116
	Signetics	**TDA4501**	★**3731**
			3308-20
			3327-74
	SiliconG	SG4501	3392-81
			3395-52
	Toshiba	**TC4501B**	★**1363**
			828-135
	VTI	VL4501	2892-82
4502	**RCA**	**CD4502B**	★ **704**
			★**1145**
			809-9
		CD4502BE	★ **704**
			★**1145**
			809-10
	SGS	HCC4502B	809-11
		HCF4502B	809-12
	Signetics	HEF4502B	809-13
		TDA4502	★**3717**
			★**3731**
			3308-21
			3327-75
	SSS	BCL4502B	809-15
		SCL4502B	809-16
	TI	**THCT4502**	★**1314**
	Toshiba	**TC4502B**	★**1363**
			809-17
	VTI	**VL4502**	★**1751**
			★**1752**
			★**1755**
			2894-12
4503	National	CD4503BC	809-171
		CD4503BM	809-172
	Panasonic	MN4503B	809-173
	RCA	**CD4503BD**	★**1145**
			809-174
		CD4503BE	★**1145**
			809-175
	SGS	TM4503	2896-26
	Signetics	**TDA4503**	★**3731**
	Toshiba	TM4503	2896-17
4504	Burr-Brown	ST4504	2039-7
	SSS	BCL4504B	808-64
		SCL4504B	808-65

Arranged alphanumerically from left to right.

Base Number	Source	Device	Page-Line
4505	Burr-Brown	ST4505	2039-18
	Signetics	HEF4505	3832-14
		HEF4505B	831-112
4507	National	CD4507BC	828-65
		CD4507BM	828-66
		NSM4507	2876-95
4508	**RCA**	**CD4508B**	★ **704**
			★ **1146**
			829-7
		CD4508BE	★ **704**
			★ **1146**
			829-8
	SGS	HCC4508B	829-9
	Signetics	HEF4508B	829-11
	Solitron	CM4508	829-12
	SSS	BCL4508B	829-14
		SCL4508B	829-15
	Toshiba	**TC4508B**	★ **1363**
			829-16
451	Brooktree	BT451	2849-9
			1466-4
	Ferranti	ZN451	2848-43
	Intersil	MM451	2828-80
	National	MM451	¶ 401-13
			¶ 402-11
4510	Fairchild	F4510BC	815-56
		F4510BM	815-57
	National	CD4510BC	815-62
		CD4510BM	815-63
	RCA	**CD4510B**	★ **1146**
			815-66
		CD4510BE	★ **1146**
			815-67
	SGS	HCC4510B	815-69
		HCF4510B	815-71
	Signetics	HCT4510	815-125
		HEF4510B	815-73
	SSS	BCL4510B	815-77
		SCL4510B	815-79
	Toshiba	**TC4510B**	★ **1363**
			815-81
4511	Fairchild	F4511BC	819-148
			2875-149
		F4511BM	819-149
			2875-150
	National	CD4511BC	819-156
			2875-155
		CD4511BM	819-157
			2875-156
	Panasonic	MN4511B	819-158
			2875-157
	RCA	**CD4511B**	★ **1147**
			819-159
			2875-158
		CD4511BE	★ **1147**
			819-160
			2875-159
	SGS	HCC4511B	819-161
			2875-160
		HCF4511B	819-162
			2875-161
	Signetics	HEF4511B	819-163
			2875-162
		HEF4511BD	2875-163
	Solitron	CM4511B	819-164
			2875-164
		CM4511BE	819-165
			2875-165
	SSS	BCL4511B	819-167
		SCL4511B	819-168
			2875-167
	Toshiba	**TC4511B**	★ **1363**
			819-169
			2875-168
4512	Fairchild	F4512BC	833-57
		F4512BM	833-58
	National	CD4512BC	833-61
		CD4512BM	833-62
	Panasonic	MN4512B	833-63
	RCA	**CD4512B**	★ **1147**
			833-64
		CD4512BE	★ **1147**
			833-65
	SGS	HCC4512B	833-66
		HCF4512B	833-67
	Signetics	HEF4512B	833-68
			(Continued)
4512	SSS	BCL4512B	833-70
		SCL4512B	833-71
	Toshiba	**TC4512B**	★ **1363**
			833-72
45128	**Dense-Pac**	**DPE45128**	★ **4008**
			3813-110
			3813-111
		DPS45128	★ **4008**
			3848-15
			3848-17
4514	Fairchild	F4514BC	818-178
		F4514BM	818-179
	National	CD4514BC	818-186
		CD4514BM	818-187
	RCA	**CD4514B**	★ **704**
			★ **1145**
			818-190
		CD4514BE	★ **704**
			★ **1145**
			818-191
	SGS	HCC4514B	818-194
		HCF4514B	818-196
	Signetics	HEF4514B	818-198
	Solitron	CM4514B	818-200
		CM4514BE	818-201
	SSS	BCL4514B	818-206
		SCL4514B	819-2
	Toshiba	**TC4514B**	★ **1363**
			819-4
4515	Fairchild	F4515BC	818-180
		F4515BM	818-181
	National	CD4515BC	818-188
		CD4515BM	818-189
	RCA	**CD4515B**	★ **704**
			★ **1145**
			818-192
		CD4515BE	★ **704**
			★ **1145**
			818-193
	SGS	HCC4515B	818-195
		HCF4515B	818-197
	Signetics	HEF4515B	818-199
	Solitron	CM4515B	818-202
		CM4515BE	818-203
	SSS	BCL4515B	819-1
		SCL4515B	819-3
	Toshiba	**TC4515B**	★ **1363**
			819-5
4516	Fairchild	F4516BC	812-91
		F4516BM	812-92
	Mostek	MK4516	¶ 440-6
		MK4516-10	3826-44
		MK4516-12	3826-48
		MK4516-15	3826-53
		MKB4516-80	3826-80
		MKB4516-81	3826-91
		MKB4516-82	3826-93
	Motorola	MCM4516/17	¶ 441-3
	National	CD4516BC	812-97
		CD4516BM	812-98
	Panasonic	MN4516B	812-99
	RCA	**CD4516B**	★ **1146**
			812-102
		CD4516BE	★ **1146**
			812-103
	SGS	HCC4516B	812-104
		HCF4516B	812-105
	Signetics	HEF4516B	812-107
	SSS	BCL4516B	812-111
		SCL4516B	812-113
	Toshiba	**TC4516B**	★ **1363**
			812-115
4517	**Motorola**	**MCM4517-10**	★ **4118**
			3826-45
		MCM4517-12	★ **4118**
			3826-49
		MCM4517-15	★ **4118**
			3826-54
		MCM4517-20	★ **4118**
			3826-66
	RCA	CD4517B	835-14
		CD4517BE	835-15
			3857-9
			3857-12
	SGS	HCF4517B	835-16
	Signetics	HEF4517B	835-17
			(Continued)
4517	SSS	BCL4517B	835-19
		SCL4517B	835-20
			3857-10
4518	Fairchild	F4518BC	815-183
		F4518BM	815-184
	National	CD4518BC	815-187
		CD4518BM	815-188
	Panasonic	MN4518B	815-189
	RCA	CD4518	¶ 356-9
		CD4518B	★ **1146**
			815-190
		CD4518BE	★ **1146**
			815-191
	SGS	HCC4518B	815-192
		HCF4518B	815-193
	Signetics	HEF4518B	816-1
	Solitron	CM4518B	816-2
		CM4518BE	816-3
	SSS	BCL4518B	816-5
		SCL4518B	816-6
	Toshiba	**TC4518B**	★ **1363**
			816-7
4519	Fairchild	F4519BC	833-16
		F4519BM	833-17
	National	CD4519BC	833-20
		CD4519BM	833-21
	Signetics	HEF4519B	833-22
	Toshiba	**TC4519B**	★ **1363**
			833-23
452	Brooktree	BT452	2849-7
			1465-60
	Datel	**AM-452-2**	★ **3163**
			3357-66
	Intersil	MM452	2828-65
	National	COP452	1451-42
4520	Fairchild	F4520BC	812-155
		F4520BM	812-156
	GouldAMI	**S4520**	★ **3166**
			2874-87
	National	CD4520BC	812-159
		CD4520BM	812-160
	Panasonic	MN4520B	812-161
	RCA	**CD4520B**	★ **1146**
			812-162
			¶ 355-17
		CD4520BE	★ **1146**
			812-163
	SGS	HCC4520B	812-164
		HCF4520B	812-165
	Signetics	HEF4520B	812-166
	Solitron	CM4520B	812-167
		CM4520BE	812-168
	SSS	BCL4520B	812-170
		SCL4520B	812-171
	Toshiba	**TC4520B**	★ **1363**
			812-172
4521	GouldAMI	S4521	2877-95
			2895-44
	Signetics	HEF4521B	834-138
	Toshiba	**TC4521B**	★ **1363**
			834-139
4522	Fairchild	F4522BC	815-97
		F4522BM	815-98
	National	CD4522BC	815-101
		CD4522BM	815-102
	Signetics	HEF4522B	815-103
	SSS	BCL4522B	815-105
		SCL4522B	815-106
	Toshiba	**TC4522B**	★ **1363**
			★ **13663**
			815-107
45256	**Dense-Pac**	**DPD45256**	★ **4008**
			3829-98
4526	Fairchild	F4526BC	812-124
		F4526BM	812-125
	National	CD4526BC	812-128
		CD4526BM	812-129
	Signetics	HEF4526B	812-130
	SSS	BCL4526B	812-132
		SCL4526B	812-133
	Toshiba	**TC4526B**	★ **1363**
			812-134
4527	**GouldAMI**	**S4527**	★ **3167**
	National	CD4527BC	838-37
		CD4527BM	838-38
	RCA	CD4527	¶ 352-7
			(Continued)
4527	**RCA**	**CD4527B**	★ **1147**
			838-39
		CD4527BE	★ **1147**
			838-40
	SGS	HCC4527B	838-41
		HCF4527B	838-42
	Signetics	HEF4527B	838-43
	SSS	BCL4527B	838-34
		SCL4527B	838-45
	Toshiba	**TC4527B**	★ **1363**
			838-46
4528	Fairchild	F4528BC	834-83
		F4528BM	834-84
	Mostek	MK4528	¶ 440-6
		MK4528-15	3828-59
		MK4528-20	3828-62
		MK4528-25	3828-63
	National	CD4528BC	834-87
		CD4528BM	834-88
	Panasonic	MN4528B	834-60
	Signetics	HEF4528B	834-93
	SSS	BCL4528B	834-95
		SCL4528	¶ 355-18
		SCL4528B	834-96
	Toshiba	**TC4528B**	★ **1363**
			834-97
4529	National	CD4529BC	2830-3
			2830-86
		CD4529BM	2830-4
			2830-87
453	Brooktree	BT453	2855-31
			1466-5
	National	MM453	¶ 402-11
4530	**Toshiba**	**TC4530B**	★ **1363**
			828-132
4531	Fairchild	F4531BC	842-105
		F4531BM	842-106
	Signetics	HEF4531B	842-109
	SSS	BCL4531B	842-111
		SCL4531B	842-112
	Toshiba	**TC4531B**	★ **1363**
			842-113
4532	Fairchild	F4532BC	842-72
		F4532BM	842-73
	RCA	**CD4532B**	★ **704**
			★ **1145**
			842-76
		CD4532BE	★ **704**
			★ **1145**
			842-77
	SGS	HCC4532B	842-78
		HCF4532B	842-79
	Signetics	HEF4532B	842-80
	SSS	BCL4532B	842-82
		SCL4532B	842-83
	Toshiba	**TC4532B**	★ **1363**
			842-84
4534	**GouldAMI**	**S4534**	★ **3168**
			2877-74
			2895-41
	Signetics	HEF4534B	816-69
4535	**GouldAMI**	**S4535**	★ **3169**
			2877-96
			2895-45
4536	**RCA**	**CD4536B**	★ **1146**
			834-114
		CD4536BE	★ **1146**
			834-115
4538	National	CD4538BC	834-58
		CD4538BM	834-59
	Panasonic	MN4538B	834-61
	RCA	**CD4538B**	★ **1145**
			834-62
		CD4538BE	★ **1145**
			834-63
	Signetics	HEF4538B	834-64
	Toshiba	**TC4538B**	★ **1363**
			834-65
4539	Fairchild	F4539BC	832-2
		F4539BM	832-3
	NEC	µPC4539	3357-185
	Panasonic	MN4539B	832-6
	Signetics	HEF4539B	832-7
	Toshiba	**TC4539B**	★ **1363**
			832-8

¶ Indicates page number in Application Note Directory.
★ Indicates additional data is provided on the page noted.

Base Number	Source	Device	Page-Line
454	National	MM454	¶ 401-13
			¶ 402-11
	Telefunken	U454B	3381-40
4541	**RCA**	**CD4541B**	★ **1146**
			834-109
		CD4541BE	★ **1146**
			834-110
	Signetics	HEF4541B	834-111
4543	National	CD4543BC	819-99
		CD4543BM	819-100
	RCA	**CD4543BD**	★ **1147**
			2875-170
		CD4543BE	★ **1147**
			2875-171
	Signetics	HEF4543B	819-101
	SSS	BCL4543B	819-103
		SCL4543B	819-104
			2876-9
	Toshiba	**TC4543B**	★ **1363**
			819-105
455	Intersil	MM455	2828-42
	National	NS455	1466-8
			¶ 382-1
			¶ 382-2
			¶ 382-9
4550	Signetics	TDA4550	3325-21
	TeledyneP	4550	¶ 393-20
4553	Fairchild	F4553BC	816-14
		F4553BM	816-15
4555	Fairchild	F4555BC	817-58
		F4555BM	817-59
	RCA	**CD4555B**	★ **704**
			★ **1145**
			★ **1147**
			817-62
		CD4555BE	★ **704**
			★ **1145**
			★ **1147**
			817-63
	SGS	HCC4555B	817-64
		HCF4555B	817-65
	Signetics	HEF4555B	817-66
		TDA4555	★ **3731**
			3325-22
	SSS	BCL4555B	817-68
		SCL4555B	817-69
	Toshiba	**TC4555B**	★ **1363**
			817-70
4556	Fairchild	F4556BC	817-71
		F4556BM	817-72
	NEC	µPC4556	3367-3
	Panasonic	MN4556B	817-75
	RCA	**CD4556B**	★ **704**
			★ **1145**
			★ **1147**
			817-76
		CD4556BE	★ **704**
			★ **1145**
			★ **1147**
			817-77
	SGS	HCC4556B	817-78
		HCF4556B	817-79
	Signetics	HEF4556B	817-80
		TD4556	★ **3731**
		TDA4556	3325-23
	SSS	BCL4556B	817-82
		SCL4556B	817-83
	Toshiba	**TC4556B**	★ **1363**
			817-84
4557	Fairchild	F4557BC	837-23
			3857-5
		F4557BM	837-24
			3857-1
	NEC	µPC4557	3366-59
	Signetics	HEF4557B	837-27
4558	Exar	XR4558	3367-30
			¶ 404-1
	Goldstar	**GL4558**	★ **3580**
			3366-3
	Motorola	**MC4558**	★ **3617**
			3366-4
		MC4558A	★ **3617**
			3366-5
		MC4558C	★ **3617**
			3367-24
	NEC	µPC4558	3367-32
			(Continued)

Base Number	Source	Device	Page-Line
4558	Raytheon	RC4558	3367-33
		RM4558	3365-50
	Samsung	**MC4558**	★ **3679**
			3366-6
		MC4558C	★ **3679**
			3367-27
	SGS	LS4558N	3365-49
	Signetics	**NE4558**	★ **3729**
			3367-26
		SE4558	★ **3729**
			3366-1
	ThomsonCSF	MC4558	3366-2
		MC4558C	3367-25
4559	**Goldstar**	**GL4559**	★ **3580**
			3372-5
	NEC	µPC4559	3367-2
	Raytheon	RC4559	3367-28
		RM4559	3366-7
4560	**Exar**	**XR4560**	★ **3555**
			3367-37
	NEC	µPC4560	3367-38
	Signetics	**TDA4560**	★ **3731**
			3325-24
	Toshiba	**TC4560B**	★ **1363**
			806-9
4561	**Toshiba**	**TC4561B**	★ **1363**
			808-59
4564	Mostek	MK4564	¶ 435-13
			¶ 440-6
			¶ 441-15
		MK4564-15	3827-55
		MK4564-20	3827-78
		MK4564-25	3827-92
		MKB4564-82	★ **695**
			3827-56
		MKB4564-83	★ **695**
			3827-79
		MKB4564-84	★ **695**
			3827-93
		MKJ4564-92	3827-58
4565	**Raytheon**	**DAC-4565**	★ **3662**
			2862-34
		DAC-4565S	★ **3662**
			2832-1
457	Sanyo	STK457	3318-160
4570	NEC	µPC4570	3368-31
4572	**Toshiba**	**TC4572B**	★ **1363**
			828-138
458	Brooktree	BT458	2855-30
			1466-6
	Ferranti	ZN458	3402-34
		ZN458A	3402-35
		ZN458B	3402-36
4580	**Signetics**	**TDA4580**	★ **3731**
4581	SSS	BCL4581B	807-6
		SCL4581B	807-7
4582	Fairchild	F4582BC	807-16
		F4582BM	807-17
	SSS	BCL4582B	807-25
		SCL4582B	807-26
4583	Fairchild	F4583BC	838-50
		F4583BM	838-51
	Toshiba	**TC4583B**	★ **1363**
			838-54
4584	National	CD4584BC	839-43
		CD4584BM	839-44
	SSS	BCL4584B	839-51
		SCL4584B	839-52
	Toshiba	**TC4584**	★ **1363**
4585	Panasonic	MN4585B	807-58
	RCA	**CD4585B**	★ **1147**
			807-61
		CD4585BE	★ **1147**
			807-62
	Signetics	HEF4585B	807-65
	SSS	BCL4585B	807-67
		SCL4585B	807-68
	Toshiba	**TC4585B**	★ **1363**
			807-70
459	AnalogSys	MA459	3318-206
	Ferranti	ZN459	3318-207
		ZN459C	3319-1
		ZN459CP	3319-2
	Sanyo	STK459	3318-161
4592	GI	AY3-4592	2880-18
45CF8	NCR	NCR45CF8	844-114

Base Number	Source	Device	Page-Line
45CG72	**NCR**	**NCR45CG72**	★ **1134**
			844-67
45CM16			
	NCR	NCR45CM16	843-113
			¶ 366-3
45CT6	NCR	NCR45CT6	806-120
			¶ 430-3
45GDS1	**NCR**	**NCR45GDS1**	★ **1134**
45GS2	**NCR**	**NCR45GS2**	★ **1134**
			806-121
45H64	**Mostek**	**MK45H64-10**	★ **4117**
			3827-16
		MK45H64-12	★ **4117**
			3827-32
		MK45H64-8	★ **4117**
			3827-6
		MKB45H64-81	3827-33
		MKB45H64-82	3827-57
		MKB45H64-83	3827-80
46	Hitachi	HMCS46C	1407-7
		HMCS46CL	1407-8
	Toshiba	TLCS-46	1451-75
460	Burr-Brown	CS460	1811-8
	Cherry	CS460	3320-20
	Datel	**AM-460-2**	★ **3163**
			3352-49
	Fairchild	CCD460	3854-21
	Ferranti	ZN460	3319-3
		ZN460C	3319-4
		ZN460CP	3319-5
	TI	TIED460	3399-88
4600	**CalDevices**	**CHA4600**	★ **4610**
			4440-38
		DLM4600	★ **4605**
			4440-39
	Harris	HA-4600-2	3370-19
		HA-4600-5	3370-20
	Motorola	TDA4600	3399-98
	Siemens	TDA4600-2	3396-71
	Toshiba	TCP4600AC	1413-35
4601	Siemens	TDA4601	3396-72
4602	Harris	HA-4602-2	3370-22
		HS4602RH	3370-21
4603	Burr-Brown	ST4603	2017-33
4605	Harris	HA-4605-5	3370-52
461	Cherry	CS461	3320-21
	TI	TIED461	3399-89
4610	Siemens	TDA4610	3325-68
462	Cherry	CS462	3320-22
	Datel	AM-462-1	3352-52
		AM-462-1M	3352-53
	TI	TIED462	3399-90
462532	Hitachi	HN462532	3820-103
462716	Hitachi	HN462716-2	3819-79
463	Cherry	CS463	3320-23
	Sanyo	STK463	3318-162
	TI	TIED463	3399-91
4632	Plessey	SP4632	3375-94
464	Cherry	CS464	3320-24
	Fairchild	F464	3854-22
	Intel	iSBC464	2032-24
	MicroInds	BLC464	2036-60
4642	Plessey	SP4642	3375-91
4648	**Dense-Pac**	**DPE4648**	★ **4008**
			3813-103
		DPS4648	★ **4008**
			3847-77
465	Sanyo	STK465	3318-163
	SGS	L465A	3357-159
4652	Plessey	SP4652	3375-92
4653	Plessey	SP4653	3375-93
467	Fujitsu	MB467	890-120
46810	Hitachi	HM46810	3832-39
468A10	Hitachi	HM468A10	3832-34
469	Siemens	TBB469	3322-92
	Siliconix	**D469A**	★ **3260**
			2828-113
		D469B	★ **3260**
			2828-114
		D469C	★ **3260**
			2829-1
46C16	EXEL	XL46C16-55	3812-15
			3819-27
		XL46C16-60	3812-16
			3819-33
		XL46C16-70	3812-17
			(Continued)

Base Number	Source	Device	Page-Line
46C16	EXEL	XL46C16-70	3819-50
		XL46C16-85	3812-18
			3819-66
47	Hitachi	HMCS47C	1407-9
		HMCS47CL	1407-10
	Raytheon	**OP-47B**	★ **3666**
			3338-29
		OP-47F	★ **3666**
			3338-28
		OP-47G	★ **3666**
			3339-49
470	Cherry	CS470	3320-25
	Ferranti	ZN470AE	3306-12
	HiLevel	DS470	1815-5
	National	COP470	2876-99
			1451-49
4700	Plessey	CLA4700	4453-44
	Siemens	TDA4700	3396-73
		TDA4700A	3396-74
	Toshiba	TMP4700C	1411-2
4701	Hitachi	H4701B	3857-63
	TeledyneP	4701	¶ 391-2
			¶ 391-11
			¶ 394-4
			¶ 394-6
4702	Fairchild	F4702BC	837-52
			2900-19
			1448-23
		F4702BM	837-53
			2900-20
			1448-24
	Harris	HD4702	¶ 413-15
		HD4702-2	★ **1624**
			837-54
			2900-21
			1448-25
	Intersil	**IM4702**	★ **1645**
			2900-22
	TeledyneP	4702	¶ 394-6
4703	Burr-Brown	ST4703	2041-13
	Fairchild	F4703BC	831-86
			1448-19
		F4703BM	831-87
			1448-20
	TeledyneP	4703	¶ 391-2
			¶ 391-11
			¶ 394-4
4704	Fairchild	F4704BC	806-103
			1448-15
		F4704BM	806-104
			1448-16
4705	Fairchild	F4705BC	806-149
			1448-11
		F4705BM	806-150
			1448-12
	SGS	L4705	3384-45
	TeledyneP	4705	¶ 391-2
			¶ 391-11
			¶ 394-4
	VTC	**VA4705**	★ **3742**
			3334-211
		VA4705J	★ **3742**
			3373-46
		VA4705K	★ **3742**
			3372-8
		VA4705L	★ **3742**
			3370-15
		VA4705M	★ **3742**
			3372-7
		VA4705N	★ **3742**
			3370-14
4706	Fairchild	F4706BC	831-93
			1448-21
		F4706BM	831-94
			1448-22
	VTC	**VA4706**	★ **3742**
			3334-212
		VA4706J	★ **3742**
			3374-16
		VA4706K	★ **3742**
			3374-8
		VA4706L	★ **3742**
			3373-44
4707	Fairchild	F4707BC	806-101
			1448-13
		F4707BM	806-102
			(Continued)

Arranged alphanumerically from left to right.

PART NUMBER INDEX

Base Number	Source	Device	Page-Line
4707	Fairchild	F4707BM	1448-14
	VTC	**VA4707**	★ **3742**
			3373-45
4708	Analogic	MN4708	2830-173
		MN4708D	2831-32
	Fairchild	F4708C	1448-17
		F4708M	1448-18
4709	TeledyneP	4709	¶ 391-11
4710	Fairchild	F4710BC	831-108
			3831-118
			1448-26
		F4710BM	831-109
			3831-119
			1448-27
	OKI	**MSA4710**	★ **4733**
	SGS	L4710	3386-100
4712	**Intersil**	**IM4712**	★ **1645**
			2900-23
47128	**TI**	**TMS47128-20**	★ **4225**
			3852-10
		TMS47128-25	★ **4225**
			3852-37
		TMS47128-35	★ **4225**
			3852-56
4716	Analogic	MN4716	2831-92
4718	Siemens	TDA4718	3396-75
		TDA4718A	3396-76
472	Ferranti	ZN472E	3306-13
	National	COP472	1451-43
	Xylogics	472	2034-24
4720	Fairchild	F4720AC	831-115
			3832-82
		F4720AM	831-116
		F4720C	831-117
			3832-83
			1448-30
		F4720M	831-118
			3832-84
			1448-31
	Signetics	HEF4720B	831-123
		HEF4720V	831-124
	Toshiba	BM4720	1821-21
		TMP4720	★ **1750**
4721	Toshiba	BM4721	1821-22
4722	**OKI**	**MSA4722**	★ **4733**
4723	Fairchild	F4723BC	829-17
		F4723BM	829-18
	National	CD4723BC	829-19
		CD4723BM	829-20
4724	Fairchild	F4724BC	831-11
		F4724BM	831-12
	National	CD4724BC	831-17
		CD4724BM	831-18
	RCA	**CD4724B**	★ **1146**
			831-21
		CD4724BE	★ **1146**
			831-22
	Signetics	HEF4724B	831-25
4725	Fairchild	F4725BC	831-104
			1448-28
		F4725BM	831-105
			1448-29
47256	**TI**	**TMS47256-20**	★ **4224**
			3852-111
		TMS47256-25	★ **4224**
			3853-10
		TMS47256-35	★ **4224**
			3853-24
4726	Fairchild	F4726BC	1448-32
		F4726BM	1448-33
473	Ferranti	ZN473E	3381-107
	Signetics	**PLC473**	★ **4154**
			4473-79
		PLHS473	★ **4154**
			4473-78
4731	Fairchild	F4731BC	835-23
			3857-16
		F4731BM	835-24
			3857-17
	Signetics	HEF4731B	835-25
		HEF4731V	835-26
	TeledyneP	4731	3405-76
		4731-HR	3405-77
4732	SMC	ROM4732	¶ 363-11
	TeledyneP	4732	3405-78
		4732-HR	3405-79
			(Continued)

Base Number	Source	Device	Page-Line
4732	TI	TMS4732	¶ 441-19
		TMS4732-15	★ **4227**
			3849-77
		TMS4732-20	★ **4227**
			3849-88
		TMS4732-25	★ **4227**
			3849-96
4733	TeledyneP	4733	3405-80
4734	Fairchild	F4734BC	819-150
			2876-16
		F4734BM	819-151
			2876-17
	TeledyneP	4734	3405-81
		4734-H4	3405-82
4735	Fairchild	F4735BC	1448-34
		F4735BM	1448-35
	TeledyneP	4735	3405-83
		4735-HR	3405-84
4736	TeledyneP	4736	3399-111
		4736-HR	3405-85
4737	Signetics	HEF4737	816-44
4738	Signetics	HEF4738	1455-27
			1467-97
4739	Exar	XR4739	3319-39
			3367-34
		XR4739M	3319-40
	Raytheon	RC4739	3367-29
	TeledyneP	4739	3405-86
474	Ferranti	ZN474E	3378-23
	Proximity	PF474	844-110
			1468-53
4740	**Toshiba**	**TMP4740**	★ **1750**
4741	Exar	XR4741C	3371-46
		XR4741M	3370-46
	Harris	HA-4741-2	3370-47
		HA-4741-5	3371-47
	Motorola	**MC4741**	★ **3618**
			3372-6
		MC4741C	★ **3618**
			3372-48
	NEC	μPC4741	3371-45
	Raytheon	HA4741-2	3370-48
		HA4741-5	3371-48
		HA4741-8	3369-27
4742	Plessey	SP4742	3375-89
4743	TeledyneP	4743	3405-87
475	Ferranti	ZN475E	3306-14
4750	Signetics	HEF4750	3375-131
4751	Signetics	HEF4751	891-66
4752	**Signetics**	**HEF4752V**	★ **3730**
			2895-67
476	Ferranti	ZN476E	3306-15
4760	NEC	MC4760	3323-116
4764	**TI**	**TMS4764-15**	★ **4226**
			3850-49
		TMS4764-20	★ **4226**
			3850-70
		TMS4764-25	★ **4226**
			3850-117
477	Ferranti	ZN477E	3306-16
478	Ferranti	ZN478E	3306-17
4780	Plessey	SP4780	3375-90
	TeledyneP	4780	3405-119
4781	TeledyneP	4781	3405-120
4782	TeledyneP	4782	3405-121
4785	SGS	L4785	3386-75
47C1024			
	TI	**TMS47C1024-25**	
			★ **4223**
			3853-88
		TMS47C1024-30	
			★ **4223**
			3853-95
		TMX47C1024-20	3853-78
47C128	TI	TMS47C128-15	3851-113
		TMS47C128-20	3851-126
		TMS47C128-25	3852-22
47C20	**Toshiba**	**TMP47C20**	★ **1750**
47C200	**Toshiba**	**TMP47C200**	★ **1750**
47C21	**Toshiba**	**TMP47C21**	★ **1750**
47C210	**Toshiba**	**TMP47C210**	★ **1750**
47C22	**Toshiba**	**TMP47C22**	★ **1750**
47C220	**Toshiba**	**TMP47C220**	★ **1750**
47C256	**TI**	**TMS47C256-15**	★ **4221**
			3852-82
		TMS47C256-20	★ **4221**
			(Continued)

Base Number	Source	Device	Page-Line
47C256	TI	TMS47C256-20	3852-97
		TMS47C256-25	★ **4221**
			3852-125
47C40	**Toshiba**	**TMP47C40**	★ **1750**
47C400	**Toshiba**	**TMP47C400**	★ **1750**
47C41	**Toshiba**	**TMP47C41**	★ **1750**
47C410	**Toshiba**	**TMP47C410**	★ **1750**
47C420	**Toshiba**	**TMP47C420**	★ **1750**
47C46	**Toshiba**	**TMP47C46**	★ **1750**
47C512	**TI**	**TMS47C512-20**	★ **4222**
			3853-47
		TMS47C512-25	★ **4222**
			3853-52
		TMX47C512-20	3853-48
		TMX47C512-25	3853-53
		TMX47C512-30	3853-58
47C522	TI	TMS47C522-30	3853-57
48	Intel	MCS-48	¶ 375-1
	TeledyneC	CAG48A	2827-70
480	Cherry	CS480	3320-26
	Cybernetic	CY480	2896-41
			1468-9
4801	Mostek	MK4801A	¶ 435-13
			¶ 439-18
		MK4801A-1	3837-27
		MK4801A-2	3837-35
		MK4801A-3	3837-38
		MK4801A-4	3837-41
		MK4801A-55	3837-10
		MK4801A-70	3837-11
		MK4801A-90	3837-13
		MKB4801-87	3837-12
		MKB4801-89	3837-14
		MKB4801A-81	3837-28
	Sprague	UCN-4801A	2898-138
		UCS-4801H	2894-9
			¶ 398-6
4802	Mostek	MK4802	¶ 435-13
			¶ 439-18
	Sharp	LR4802	3378-62
4803	Sharp	LR4803	3378-63
4804	Sharp	LR4804	3378-60
4805	**Raytheon**	**RC4805**	★ **3648**
			3312-11
			¶ 414-10
		RC4805A	★ **3648**
			3312-3
		RM4805	3312-12
		RM4805A	3312-4
	SGS	L4805	3384-34
	Sharp	LR4805	3378-61
	Sprague	UCN-4805A	2875-31
4806	Sharp	LR4806	3378-64
4807	**Sprague**	**UCN-4807A**	★ **3269**
			2895-28
		UCS-4807H	¶ 398-6
4808	**Sprague**	**UCN-4808A**	★ **3269**
			2895-29
		UCS-4808H	¶ 398-6
481	Cherry	CS481	3320-27
4810	Intech	TL4810A	¶ 398-3
		UCN4810A	¶ 398-3
	SGS	L4810	3386-95
	Sprague	UCN-4810A	¶ 399-9
		UCS-4810H	2894-10
			2895-42
			¶ 398-6
	TI	TL4810A	¶ 398-4
		UCN4810	¶ 398-4
4815	Sprague	UCN-4815A	¶ 399-9
		UCS-4815H	2877-23
			¶ 398-6
4817	Mostek	MKB4817-82	3838-65
		MKB4817-83	3838-66
		MKB4817-84	3838-67
482	Cherry	CS482	3320-28
	SGS	L482	3319-119
4820	Sprague	UCS-4820H	¶ 398-6
	Toshiba	BM4820	1821-23
4821	Sprague	UCN-4821A	2895-30
		UCS-4821H	2895-33
	Toshiba	BM4821	1821-24
4822	Sprague	UCN-4822A	2895-31
		UCS-4822H	2895-34
4823	Sprague	UCN-4823A	2895-32
		UCS-4823H	2895-35

Base Number	Source	Device	Page-Line
4827128			
	Hitachi	HN4827128-25	3823-24
			3823-30
		HN4827128-30	3823-49
			3823-55
		HN4827128-45	3823-68
			3823-72
482764	Hitachi	HN482764-2	3821-107
		HN482764-3	3822-12
		HN482764-4	3822-66
483	Cherry	CS483	3320-29
484	Cherry	CS484	3320-30
	National	COP484	1409-15
	SGS	L484	3319-120
48416	Hitachi	HM48416A-20	3826-105
4847	Hitachi	HM4847	3840-27
		HM4847-2	3839-112
		HM4847-3	3840-4
4848	**Dense-Pac**	**DPD4848**	★ **4008**
			3828-24
4849	**Dense-Pac**	**DPD4849**	★ **4008**
			3828-42
485	Cherry	CS485	3320-31
	SGS	L485	3319-109
4855	TeledyneP	4855	¶ 393-20
4856	Mostek	MK4856-10	3826-110
		MK4856-12	3826-112
		MK4856-15	3827-2
	TeledyneP	4856	3404-81
486	Cherry	CS486	3320-32
	Datel	SHM-4860C	3403-185
	SGS	L486	3319-113
4860	**Datel**	**SHM-4860M**	★ **3159**
			★ **3160**
			3403-184
		SHM4860	★ **3163**
	TeledyneP	4860	3404-82
		4860-HR	3404-83
4864	Hitachi	HM4864-1	3827-28
		HM4864-2	3827-51
		HM4864-3	3827-75
		HM4864A-12	3827-29
		HM4864A-15	3827-52
		HM4864A-20	3827-76
4866	TeledyneP	4866	3405-8
487	Cherry	CS487	3320-33
	SGS	L487	3384-46
488	Cherry	CS488	3320-34
	Intel	iSBX488	2033-8
	MicroDesigns	μDX-488	2032-51
4885	SGS	L4885	3386-73
4888	**Raytheon**	**DAC-4888**	★ **3656**
			2851-16
		DAC-4888B	★ **3656**
			2851-17
		DAC4888B	2854-12
		DAC4888D	2854-11
		DAC4888F	2854-13
489	Cherry	CS489	3320-35
48C02	Mostek	MK48C02-15	3838-85
		MK48C02-20	3839-16
		MK48C02-25	3839-46
		MK48C02L-15	3838-86
		MK48C02L-20	3839-17
		MK48C02L-25	3839-47
48C64	EXEL	XL48C64-150	3813-18
		XL48C64-200	3813-23
		XL48C64-250	3813-36
48Z02	**Mostek**	**MK48Z02-15**	★ **4115**
			3838-64
		MK48Z02-20	★ **4115**
			3838-112
		MK48Z02-25	★ **4115**
			3839-28
49	TeledyneC	CAG49	2824-79
			2824-81
	Wintek	**MRR49**	★ **2118**
			2037-31
490	Plessey	SL490	3323-54
4900	Harris	HA-4900-2	3315-52
4902	Harris	HA-4902-2	3316-12
	TeledyneP	4902	3399-66
		4902-83	3399-67
4905	Harris	HA-4905-5	3316-47
4910	TI	TCM4910	3377-155
4913	TI	TCM4913	3377-98

¶ Indicates page number in Application Note Directory.
★ Indicates additional data is provided on the page noted.

Base Number	Source	Device	Page-Line
4914	TI	TCM4914	3377-99
4916	SGS	L4916	3377-93
			3377-132
	TI	TCM4916	3377-100
			3377-134
4917	TI	TCM4917	3377-72
			3377-101
493	**Unitrode**	**UC493A**	**★3739**
			★3739
			3397-68
		UC493AC	**★3739**
			★3739
			3397-69
494	**Exar**	**XR494**	**★3557**
			3395-100
	Fairchild	µA494C	3395-103
		µA494M	3395-104
	Goldstar	**GL494**	**★3580**
			3395-112
	IPS	**IP494A**	**★3599**
			3395-141
		IP494Z	**★3599**
			3395-142
	Motorola	**TL494C**	**★3626**
			3396-31
		TL494M	**★3626**
			3396-32
	National	COP494	3811-1
			1451-41
	NEC	µPC494	3396-42
	TI	**TL494M**	**★ 720**
			3397-1
	Unitrode	**UC494A**	**★3739**
			★3739
			3397-70
		UC494AC	**★3739**
			★3739
			3397-71
4944	National	NSL4944	3400-71
495	**Exar**	**XR495**	**★3558**
			3395-101
	Goldstar	**GL495**	**★3580**
			3395-113
	Motorola	**TL495C**	**★3626**
			3396-33
		TL495M	**★3626**
			3396-34
	National	COP495	3811-36
	Unitrode	**UC495**	**★3739**
			3397-72
		UC495A	**★3739**
			★3739
			3397-73
		UC495AC	**★3739**
			★3739
			3397-74
		UC495B	**★3739**
			★3739
			3397-75
		UC495BC	**★3739**
			★3739
			3397-76
4950	Harris	HA-4950	¶ 386-17
	SGS	TDA4950	3325-94
4956	GI	MEM4956	¶ 415-12
496	Telefunken	U496BS	891-60
4968	**Dense-Pac**	**DPE4968**	**★4008**
			3813-106
		DPS4968	**★4008**
			3847-92
497	TI	TL497A	¶ 427-3
		TL497AM	**★ 720**
			3397-2
498	National	COP498	831-131
			1451-45
499	National	COP499	1451-47
49C401	IDT	IDT49C401	1462-128
49C402	**IDT**	**IDT49C402**	**★1644**
			1462-127
49C410	**IDT**	**IDT49C410**	**★1642**
			1462-126
4C1024	**TI**	**TMX4C1024-10**	**★4188**
			3830-43
		TMX4C1024-12	**★4188**
			3830-54
			(Continued)
4C1024	**TI**	**TMX4C1024-15**	**★4188**
			3830-65
4C1025	**TI**	**TMX4C1025-10**	**★4188**
			3830-44
		TMX4C1025-12	**★4188**
			3830-55
		TMX4C1025-15	**★4188**
			3830-66
4C1026	**TI**	**TMX4C1026-10**	**★4188**
			3830-45
		TMX4C1026-12	**★4188**
			3830-56
		TMX4C1026-15	**★4188**
			3830-67
4C1027	TI	TMC4C1027-15	3830-64
		TMX4C1027-10	**★4188**
			3830-46
		TMX4C1027-12	**★4188**
			3830-57
4C1029	**TI**	**TMX4C1029-10**	**★4188**
			3830-47
		TMX4C1029-12	**★4188**
			3830-58
		TMX4C1029-15	**★4188**
			3830-68
4C381	LogicDev	L4C381	843-1
4M010G2			
	ICDC	C4M010G2	4448-33
4M012G2			
	ICDC	C4M012G2	4448-35
4M024G2			
	ICDC	C4M024G2	4448-36
4M038G2			
	ICDC	C4M038G2	4448-37
4M068G2			
	ICDC	C4M068G2	4448-38
4N03	Sharp	IR4N03	3328-52
4N05	Sharp	IR4N05	2894-25
4R101	TeledyneC	CS4R101A	2822-29
4X2901	IMI	4X2901B	844-89
			1448-128
			1435-27
5	Calma	TEGAS-5	4964-3
	Comark	Disktor M-5	1811-16
	GI	AY-5-9400	¶ 365-5
	GouldAMI	UA-5	4446-13
	Interdesign	ULA5C	4443-10
			4443-12
		ULA5DS	4442-47
		ULA5G	4463-7
		ULA5L	4463-9
		ULA5N	4443-13
			4443-14
		ULA5RA	4442-48
		ULA5RB	4442-49
		ULA5RC	4442-50
		ULA5RD	4442-51
	IXYS	XPC-5	3395-148
	LSIComp	**RED5/6**	**★1099**
			834-98
			890-92
	Matrix	RLK5	1817-11
	Micro-Rel	D5 Library	4480-19
	Sharp	SM5A	1450-79
			1413-18
		SM5L	1413-19
	Siliconix	ISO-5	
		Library	4481-28
	Supertex	ED-5	¶ 400-1
		ED5	838-8
			¶ 399-16
	TLSI	TA-5	4456-26
	Torric	UA5	4456-40
	Universal	ISO5	¶ 444-10
	VersaLogic	IPI-5	2040-45
	VLSIDesign	MULTI-CELL5	4482-17
	WinSystems	MCM-SBC5	2019-31
50	**AD**	**AD50**	**★3508**
	Burr-Brown	PCM50	¶ 389-2
	Fairchild	**Macro-50**	
		Assembler	**★1610**
		SBC-50	**★2101**
	Harris	HI-50XX	¶ 402-2
	IntMicCir	Interchip 50	4449-5
	IntSolutions	VME-TC50	2043-52
	LSIComp	**RED50/60**	**★1099**
			(Continued)
50	LSIComp	RED50/60	834-101
			891-17
	PMI	**OP-50A**	**★3636**
			3357-162
		OP-50B	**★3636**
			3357-176
		OP-50E	**★3636**
			3357-163
		OP-50F	**★3636**
			3357-177
	TeledyneC	CAG50	2824-80
	VisionsUnlim	86/50A	2025-14
500	AnalogSys	MA500	2894-26
	Cybernetic	CY500	2895-79
			1458-39
	Datel	**AM-500**	**★3160**
			★3163
			3330-127
		AM-500GC	**★3160**
			★3163
			3331-17
			3334-250
			3346-201
		AM-500MC	**★3160**
			★3163
			3331-18
			3334-251
			3346-202
		AM-500MM	**★3160**
			★3163
			3331-19
			3334-255
		AM-500MR	**★3160**
			★3163
			3331-20
			3334-256
	Dionics	DI500	2876-58
	Exar	**XR500**	**★4618**
			4442-10
	Fujitsu	**C500AVB**	**★4624**
			4444-45
	GouldAMI	**GA500**	**★4632**
			4446-9
		GA500D	**★4632**
			★4632
			4446-10
	Intersil	IT500	¶ 408-16
	LSIComp	**RED500/600**	**★1099**
	Motorola	**MCA500ALS**	**★4718**
			4451-34
	National	MCA500ALS	¶ 443-8
			¶ 444-1
			¶ 445-16
	Quay	500T	1819-15
	Sahni	LA500	4454-27
	Sharp	SM500	1450-75
			1411-31
	Sprague	UHC/D-500	864-25
			2898-89
		UHP-500	**★3269**
			864-29
			¶ 398-7
			2898-93
	TeledyneS	TSC500	2848-2
	TLSI	TA-500	4456-23
5000	Cadnetix	CDX-5000A	4905-1
		CDX5000A	**★5102**
		CDX-5000S	**★5102**
	Fujitsu	**C5000**	**★4624**
	Honeywell	HE5000	¶ 443-17
		HT5000	4447-20
			¶ 443-15
			¶ 443-16
			¶ 443-18
	Matra	MA5000	4450-36
	Signetics	SAA5000	3323-60
	Siliconix	**SD5000**	**★3223**
			★3240
	Telmos	SD5000	2828-100
	Toshiba	TC5000	835-11
50000	Cadnetix	CDX-50000	4905-2
		CDX-50000S	4905-3
		CDX50000	**★5102**
	ZyMOS	Zy50000	4482-29
5000AV1			
	Fujitsu	C5000AV1	4445-8
5001	**Siliconix**	**SD5001**	**★3223**
			★3240
	Telmos	SD5001	2828-95
		TMF5001	2828-101
	Toshiba	TC5001	816-45
5002	Harris	HA-5002-2	3306-20
		HA-5002-5	3306-21
	Micrel	MIC5002	890-27
	Mostek	MK5002	890-30
	Siliconix	**SD5002**	**★3223**
			★3240
	Telmos	SD5002	2828-96
		TMF5002	2828-102
	Toshiba	TC5002B	817-57
5003	Toshiba	TC5003	3327-97
5004	Toshiba	TC5004	835-22
5005	Micrel	MIC5005	890-28
	Mostek	MK5005	890-31
5007	Micrel	MIC5007	890-29
	Mostek	MK5007	890-32
5009	Intersil	IH5009	
		Series	¶ 402-18
		IH5009C	2828-69
		IH5009M	2828-70
	Mostek	MK5009	890-47
			¶ 357-1
	National	AH5009C	2828-71
501	**Burr-Brown**	**OPA501**	**★3150**
			3330-45
		OPA501A	**★3150**
			3348-30
			3330-46
			3357-52
		OPA501B	**★3150**
			3352-42
		OPA501R	**★3150**
			3357-50
		OPA501S	**★3150**
			3348-28
			3330-44
			3352-43
	Ferranti	ZN501AJ	2838-52
	Fujitsu	**MB501**	**★1611**
			891-34
			3376-6
		MB501L	**★1611**
			891-24
			3376-7
	IXYS	XSE501	1468-46
	LTI	LD501	3307-31
			3316-79
		WC501	3307-34
			3316-94
	MicroInds	MIB501A	2034-19
	RCA	GP501AD	1449-116
	SiliconSys	**SSI501**	**★3736**
			1469-36
	Siliconix	**DG501A**	**★3226**
			2830-189
			2830-194
		DG501B	**★3226**
			2830-190
			2830-195
		DG501C	**★3226**
			2830-191
			2830-196
5010	AD	AD5010K	2832-14
	Intersil	IH5010C	2828-76
		IH5010M	2828-77
	MicroPwr	**MP5010**	**★ 688**
			★3607
			3401-145
		MP5010A	**★ 688**
			★3607
			3401-146
	National	AH5010C	2828-78
	Siemens	SDA5010	843-157
			2832-16
	Toshiba	TC5010	816-64
5011	Intersil	IH5011C	2828-55
		IH5011M	2828-56
	National	AH5011C	2828-57
5012	Intersil	IH5012C	2828-61
		IH5012M	2828-62
	National	AH5012C	2828-63
			(Continued)

Arranged alphanumerically from left to right.

PART NUMBER INDEX

Base Number	Source	Device	Page-Line
5012	Signetics	SAA5012	3323-61
	Toshiba	TC5012B	809-180
5013	Intersil	IH5013C	2828-46
		IH5013M	2828-47
5014	Intersil	IH5014C	2828-50
		IH5014M	2828-51
5015	Intersil	IH5015C	2828-36
		IH5015M	2828-37
	SMC	SR5015	3854-23
		SR5015-133	3857-41
		SR5015-80	3857-19
		SR5015-81	3857-33
5016	Intersil	IH5016C	2828-40
		IH5016M	2828-41
	SMC	COM5016	890-2
			2900-52
		COM5016T	890-3
			2900-53
5017	Intersil	IH5017C	2828-20
		IH5017M	2828-21
	SMC	SR5017	3810-62
			3857-42
5018	Intersil	IH5018C	2828-32
		IH5018M	2828-33
	SGS	LS5018	3405-10
	Signetics	**NE5018**	★**3690**
			★**3720**
			★**3725**
			2853-30
			★**3690**
			★**3720**
			★**3725**
			1469-56
		SE5018	★**3690**
			★**3720**
			2853-31
	SMC	SR5018	3810-60
			3857-34
	Toshiba	TC5018	811-111
		TC5018B	842-53
5019	Intersil	IH5019C	2828-28
		IH5019M	2828-29
	Signetics	**NE5019**	★**3725**
			2851-35
		SE5019	★**3720**
			2851-36
501M4	**FujitsuA**	**FBC501M4**	★**2103**
			★**2104**
			2046-17
			2046-19
502	Dionics	DI502	2876-59
	DY-4	DSTD-502	2041-58
	Ferranti	ZN502CJ	2839-5
		ZN502E	2839-6
	Fujitsu	**MB502**	★**1611**
			1458-24
	LTI	LC502	3307-30
			3316-70
		LD502	3307-32
			3316-80
	RCA	GP502	¶ 363-1
			¶ 374-1
			¶ 376-10
		GP502AD	1462-102
	Sprague	UHC/D-502	864-71
			2898-120
		UHP-502	★**3269**
			864-75
			2898-124
5020	Intersil	IH5020C	2828-24
		IH5020M	2828-25
	Signetics	**NE5020**	★**3720**
			★**3725**
			2857-22
		SAA5020	3381-95
	Toshiba	TC5020B	837-42
5021	Intersil	IH5021C	2828-7
		IH5021M	2828-8
	OEI	5021	3404-61
5022	Intersil	IH5022C	2828-14
		IH5022M	2828-15
	Toshiba	TC5022B	819-170
5023	Intersil	IH5023C	2828-9
		IH5023M	2828-10
	Toshiba	TC5023	2831-53
5024	Intersil	IH5024C	2828-16
		IH5024M	2828-17
	Toshiba	TC5024	808-143
50240	Mostek	MK50240	3321-8
5025	**Intersil**	**IH5025C**	★**3196**
			2828-67
		IH5025M	★**3196**
			2828-68
	OEI	5025	3404-62
	Signetics	**SAA5025**	★**3732**
			3381-94
	SMC	COM5025	2902-1
	Toshiba	TC5025	808-144
50256	**Hitachi**	**HM50256-12**	★**4034**
			3829-7
		HM50256-15	★**4034**
			3829-41
		HM50256-20	★**4034**
			3829-64
50257	**Hitachi**	**HM50257-12**	★**4034**
			3829-8
		HM50257-15	★**4034**
			3829-42
		HM50257-20	★**4034**
			3829-65
5026	**Intersil**	**IH5026C**	★**3196**
			2828-74
		IH5026M	★**3196**
			2828-75
	SMC	COM5026	890-14
			2900-32
		COM5026T	890-15
			2900-33
	Toshiba	TC5026B	816-136
5027	**Intersil**	**IH5027C**	★**3196**
			2828-53
		IH5027M	★**3196**
			2828-54
	SSS	SND5027	1466-49
	SMC	CRT5027	1466-51
			¶ 365-16
			¶ 367-8
			¶ 367-17
	Toshiba	TC5027B	811-114
5028	**Intersil**	**IH5028C**	★**3196**
			2828-59
		IH5028M	★**3196**
			2828-60
5029	**Intersil**	**IH5029C**	★**3196**
			2828-44
		IH5029M	★**3196**
			2828-45
	Toshiba	TC5029B	825-143
502M4	**FujitsuA**	**FBC502M4**	★**2103**
			2046-20
			2046-21
503	**AD**	**AD503J**	★**3507**
			3357-173
		AD503K	★**3507**
			3357-150
		AD503S	★**3507**
			3357-151
	Dionics	DI503	2876-82
	DY-4	DSTD-503	2041-49
		DVME-503	2045-10
	Fujitsu	**MB503**	★**1611**
			891-3
	OEI	AH503	3401-62
	RCA	GP503	¶ 352-10
		GP503AD	1449-126
	Siliconix	**DG503A**	★**3226**
			2830-192
		DG503B	★**3226**
			2830-193
	Sprague	UHC/D-503	864-72
			2898-121
		UHP-503	★**3269**
			864-76
			2898-125
5030	**Intersil**	**IH5030C**	★**3196**
			2828-48
		IH5030M	★**3196**
			2828-49
	OEI	5030A	3401-58
	Signetics	**NE5030**	★**3686**
			★**3725**
			(Continued)
5030	**Signetics**	**SAA5030**	★**3732**
			3381-96
		SE5030	★**3686**
			★**3725**
		TDA5030	★**3717**
			★**3731**
			3326-119
	ThomsonCSF	TEA5030	3325-48
5031	**Intersil**	**IH5031C**	★**3196**
			2828-34
		IH5031M	★**3196**
			2828-35
5032	**Intersil**	**IH5032C**	★**3196**
			2828-38
		IH5032M	★**3196**
			2828-39
	OEI	5032A	3401-59
	Toshiba	TC5032	816-70
5033	Harris	HA-5033	3306-27
		HA-5033-2	3307-136
			3329-42
		HA-5033-5	3307-137
			3329-43
	Intersil	**5033**	★**3196**
		IH5033C	2828-18
		IH5033M	2828-19
5034	**Intersil**	**IH5034C**	★**3196**
			2828-30
		IH5034M	★**3196**
			2828-31
	Signetics	**NE5034**	★**3687**
			★**3725**
			2834-43
5035	**Intersil**	**IH5035C**	★**3196**
			2828-26
		IH5035M	★**3196**
			2828-27
5036	**Goldstar**	**GM5036**	★**3580**
			2848-3
	Intersil	**IH5036C**	★**3196**
			2828-22
		IH5036M	★**3196**
			2828-23
	Signetics	**NE5036**	★**3725**
			★**3733**
			2832-32
	SMC	COM5036	890-4
			2900-54
		COM5036T	890-5
			2900-55
	Toshiba	TC5036	813-160
5037	**Intersil**	**IH5037C**	★**3196**
			2828-5
		IH5037M	★**3196**
			2828-6
	Signetics	**NE5037**	★**3687**
			★**3725**
			2832-33
	SSS	SND5037	1466-50
	SMC	CRT5037	1466-54
			¶ 363-11
			¶ 367-2
			¶ 367-8
			¶ 373-10
	Toshiba	TC5037	816-46
5038	**Intersil**	**IH5038C**	★**3196**
			2828-12
		IH5038M	★**3196**
			2828-13
50395	Mostek	MK50395	890-34
			¶ 356-10
50396	Mostek	MK50396	890-35
			¶ 356-10
50397	Mostek	MK50397	890-36
			¶ 356-10
50398	Mostek	MK50398	890-37
50399	Mostek	MK50399	890-38
503M4	**FujitsuA**	**FBC503M4**	★**2103**
			2046-22
504	**AD**	**AD504J**	★**3507**
			3346-152
		AD504K	★**3507**
			3345-21
		AD504L	★**3507**
			3341-46
			3343-24
			(Continued)
504	**AD**	**AD504M**	★**3507**
			3332-23
			3343-23
		AD504S	★**3507**
			3341-47
			3343-25
	Dionics	DI504	2876-83
	Fujitsu	**MB504**	★**1611**
			891-14
	OEI	AH504	3401-63
	RCA	GP504AD	1449-114
	RTC	MS504	2830-94
5040	Calmos	CA5040	4441-6
	Harris	HI5040-2	2822-15
		HI5040-5	2822-16
	Intersil	**IH5040C**	★**3196**
			2822-18
		IH5040M	★**3196**
			2822-17
	Maxim	IH5040C	2822-19
		IH5040M	2822-5
	S-MOS	**SLA5040**	★**4752**
			4456-1
	Signetics	**SAA5040**	★**3732**
			3381-79
	Siliconix	**DG5040A**	★**3223**
			2822-11
		DG5040C	★**3223**
			2822-12
	ThomsonCSF	ETC5040	3379-78
5041	Harris	HI5041-2	2822-69
		HI5041-5	2822-70
	Intersil	**IH5041C**	★**3196**
			2822-72
		IH5041M	★**3196**
			2822-68
	Maxim	IH5041C	2822-73
		IH5041M	2822-6
	Signetics	SAA5041	3381-80
	Siliconix	**DG5041A**	★**3223**
			2822-55
		DG5041C	★**3223**
			2822-56
5042	Harris	HI5042-2	2825-5
		HI5042-5	2825-6
	Intersil	**IH5042C**	★**3196**
			2825-7
		IH5042M	★**3196**
			2825-3
	Maxim	IH5042C	2825-8
		IH5042M	2825-4
	Signetics	SAA5042	3381-81
	Siliconix	**DG5042A**	★**3223**
			2824-154
		DG5042C	★**3223**
			2824-155
5043	Harris	HI5043-2	2825-96
		HI5043-5	2825-97
	Intersil	**IH5043C**	★**3196**
			2825-98
		IH5043M	★**3196**
			2825-94
	Maxim	IH5043C	2825-99
		IH5043M	2825-95
	Signetics	SAA5043	3381-82
	Siliconix	**DG5043A**	★**3223**
			2825-88
		DG5043C	★**3223**
			2825-89
5044	Harris	HI5044-2	2826-93
		HI5044-5	2826-94
	Intersil	**IH5044C**	★**3196**
			2826-95
		IH5044M	★**3196**
			2826-86
			2826-96
	Maxim	IH5044C	2826-97
		IH5044M	2826-85
	Signetics	**NE5044**	★**3712**
			★**3730**
			3322-169
			3380-113
	Siliconix	**DG5044A**	★**3223**
			2826-91
		DG5044C	★**3223**
			2826-92

¶ Indicates page number in Application Note Directory.
★ Indicates additional data is provided on the page noted.

Base Number	Source	Device	Page-Line
5045	Harris	HI5045-2	2827-11
		HI5045-5	2827-12
	Intersil	**IH5045C**	**★3196**
			2827-13
		IH5045M	**★3196**
			2827-9
	Maxim	IH5045C	2827-14
		IH5045M	2827-10
	Signetics	**NE5045**	**★3712**
			★3730
			3322-168
			3380-114
		SAA5045	**★3732**
			3381-97
	Siliconix	**DG5045A**	**★3223**
			2827-5
		DG5045C	**★3223**
			2827-6
5046	Harris	HI5046-2	2827-80
		HI5046-5	2827-81
		HI5046A-2	2827-77
		HI5046A-5	2827-78
	Intersil	**IH5046C**	**★3196**
			2827-82
		IH5046M	**★3196**
			2827-79
	SMC	COM5046	890-16
			2900-34
		COM5046T	890-17
			2900-35
50464	Hitachi	HM50464-12	3827-108
		HM50464-15	3827-109
		HM50464-20	3828-8
50465	Hitachi	HM50465-12	3827-110
		HM50465-15	3827-125
		HM50465-20	3828-9
5047	Harris	HI5047-2	2827-119
		HI5047-5	2827-120
		HI5047A-2	2827-116
		HI5047A-5	2827-117
	Intersil	**IH5047C**	**★3196**
			2827-121
		IH5047M	**★3196**
			2827-118
	SMC	CRT5047	1466-53
5048	Harris	HI5048-2	2822-53
		HI5048-5	2822-54
	Intersil	**IH5048C**	**★3196**
			2822-37
		IH5048M	**★3196**
			2822-36
	Toshiba	TC5048	813-33
5049	Harris	HI5049-2	2827-3
		HI5049-5	2827-4
	Intersil	**IH5049C**	**★3196**
			2826-103
		IH5049M	**★3196**
			2826-102
504D4	FujitsuA	FBC504D4	2046-37
504M4	**FujitsuA**	**FBC504M4**	**★2103**
			★2105
505	Barvon	BC505	4439-32
			4439-33
	Dionics	DI505	2876-127
	Fujitsu	MB505-24	891-41
			3375-87
	LTI	LC505	3307-24
			3316-71
		LD505	3307-27
			3316-81
		LR505	3307-21
			3316-88
		LS505	3307-22
			3316-89
		LT505	3307-23
			3316-90
	RCA	GP505AD	1449-122
5050	Harris	HI5050-2	2824-152
		HI5050-5	2824-153
	Intersil	**IH5050C**	**★3196**
			2824-135
		IH5050M	**★3196**
			2824-134
	LSILogic	LL5050	4449-41
	Signetics	**NE5050**	**★3698**
			★3728
			(Continued)
5050	Signetics	NE5050	3380-62
		SAA5050	**★3732**
			3381-87
	Toshiba	TC5050	835-21
50500	GTEMicro	50500B	4446-26
		G50500B	4446-27
5051	Harris	HI5051-2	2825-84
		HI5051-5	2825-85
	Intersil	**IH5051C**	**★3196**
			2825-65
		IH5051M	**★3196**
			2825-64
	Signetics	SAA5051	3381-88
	ThomsonCSF	ETC5051	3377-85
	Toshiba	TC5051	816-47
5052	**Intersil**	**IH5052C**	**★3196**
			2823-52
		IH5052M	**★3196**
			2823-46
	Signetics	SAA5052	3381-91
	Toshiba	TC5052	816-48
5053	**Intersil**	**IH5053C**	**★3196**
			2823-53
		IH5053M	**★3196**
			2823-47
	Signetics	SAA5053	3381-90
	Toshiba	TC5053	816-49
5054	Siemens	5054	3321-15
	Signetics	SAA5054	3381-85
	ThomsonCSF	ETC5054	3377-107
	Toshiba	TC5054	816-50
5055	AMD	AM5055	3857-40
	Signetics	**SAA5055**	**★3732**
			3381-84
5056	AMD	AM5056	3857-47
	Signetics	SAA5056	3381-89
	ThomsonCSF	ETC5056	3377-86
5057	AMD	AM5057	3857-51
	Signetics	SAA5057	3381-86
	SMC	CRT5057	1466-52
			¶ 367-8
	ThomsonCSF	ETC5057	3377-108
506	**AD**	**AD506J**	**★3507**
			3350-5
		AD506K	**★3507**
			3345-15
		AD506L	**★3507**
			3343-49
		AD506S	**★3507**
			3345-16
	Harris	HI-506L	¶ 401-2
		HI506-2	**★3172**
			2831-74
		HI506-5	**★3172**
			2831-75
		HI506-8	**★3172**
			2831-76
		HI506A-2	**★3172**
			2831-90
		HI506A-5	**★3172**
			2831-93
		HI506A-8	**★3172**
			2831-94
		HI506L-2	**★3172**
			2831-91
		HI506L-5	**★3172**
			2831-95
		HI506L-8	**★3172**
			2831-96
	LTI	LC506	3307-25
			3316-72
		LV506	3307-29
			3316-92
	RCA	GP506AD	1449-115
	Siliconix	DG506	¶ 402-12
		DG506AA	**★3227**
			2830-58
		DG506AB	**★3227**
			2830-60
		DG506AC	**★3227**
			2830-61
	Sprague	UHC/D-506	864-26
			2898-90
		UHP-506	**★3269**
			864-30
			2898-94
			(Continued)
506	**TI**	**TL506M**	**★ 719**
			3314-3
5060	SGS	LS5060	3405-11
50601	Mitsubishi	M50601	3316-126
50602	Mitsubishi	M50602	3316-127
5064	ThomsonCSF	ETC5064	3377-109
	Toshiba	TC5064B	808-155
5065	**MicroNet**	**MN5065**	**★3203**
			2835-22
		MN5065H	**★3203**
			2835-23
	Toshiba	TC5065B	808-156
5066	MicroNet	MN5066	2835-24
		MN5066H	2835-25
	Toshiba	TC5066B	810-138
5067	ThomsonCSF	ETC5067	3377-110
	Toshiba	TC5067B	810-139
5068	Toshiba	TC5068B	819-171
5069	Toshiba	TC5069B	819-172
507	**AD**	**AD507J**	**★3508**
			3355-2
		AD507K	**★3508**
			3346-208
		AD507S	**★3508**
			3350-15
	Dionics	DI507	2876-128
	Harris	HI-507L	¶ 401-2
		HI507-2	**★3172**
			2831-10
		HI507-5	**★3172**
			2831-11
		HI507-8	**★3172**
			2831-12
		HI507A-2	**★3172**
			2831-31
		HI507A-5	**★3172**
			2831-33
		HI507A-8	**★3172**
			2831-34
		HI507L-2	**★3172**
			2831-39
		HI507L-5	**★3172**
			2831-40
		HI507L-8	**★3172**
			2831-41
	LTI	LC507	3307-26
			3316-73
		LE507	3307-28
			3316-86
	RCA	GP507AD	1449-118
	Sanyo	STK507	3389-59
	Siliconix	**DG507AA**	**★3227**
			2831-13
		DG507AB	**★3227**
			2831-20
		DG507AC	**★3227**
			2831-21
	Sprague	UHC/D-507	864-50
			2898-100
		UHP-507	**★3269**
			864-54
			2898-104
5070	Signetics	SAA5070	3382-54
5071	MicroPwr	MP5071	3322-100
508	Dionics	DI508	2876-145
	Harris	**HI508-2**	**★3175**
			2830-152
		HI508-5	**★3175**
			2830-153
		HI508-8	**★3175**
			2830-154
		HI508A-2	**★3175**
			2830-176
		HI508A-5	**★3175**
			2830-177
		HI508A-8	**★3175**
			2830-178
		HI508L-2	**★3175**
			2831-44
		HI508L-5	**★3175**
			2831-46
		HI508L-8	**★3175**
			2831-47
		HS508ARH	**★ 670**
			2831-45
	LTI	LC508	3307-19
			(Continued)
508	LTI	LC508	3316-74
		LP508	3307-20
			3316-87
	MicroInds	BLC508	2035-54
	RCA	GP508AD	1449-117
	Siliconix	**DG508AA**	**★3226**
			2830-164
		DG508AB	**★3226**
			2830-168
		DG508AC	**★3226**
			2830-169
	Sprague	UHC/D-508	864-51
			2898-101
		UHP-508	**★3269**
			864-55
			2898-105
5080	Calmos	CA5080	4441-9
	Goldstar	LL5080	4445-37
	LSILogic	**LL5080**	**★4676**
			4449-47
	S-MOS	**SLA5080**	**★4752**
			4456-2
	Signetics	**NE5080**	**★3697**
			★3728
			3380-70
50800	Mitsubishi	M50800-SP	3323-123
	RCA	**PA50800**	**★4742**
			4454-17
5081	**Signetics**	**NE5081**	**★3697**
			★3728
			3380-63
5082	Toshiba	TC5082	834-118
		TC5082L	834-117
5086	**MMI**	**5086**	**★1103**
			877-88
5087	**MMI**	**5087**	**★1103**
			877-89
	Mostek	MK5087	3382-72
	TI	TCM5087	3382-96
5089	ITT	SBA5089	3382-70
	Mostek	MK5089	3382-73
	Samsung	MK5089	3382-90
	TI	TCM5089	3382-97
509	**AD**	**AD509J**	**★3508**
			3357-58
		AD509K	**★3508**
			3331-53
			3356-45
		AD509S	**★3508**
			3331-54
			3356-46
	Dionics	DI509	2876-146
	Harris	**HI509-2**	**★3175**
			2830-45
		HI509-5	**★3175**
			2830-46
		HI509-8	**★3175**
			2830-47
		HI509A-2	**★3175**
			2830-72
		HI509A-5	**★3175**
			2830-73
		HI509L-2	**★3175**
			2830-80
		HI509L-5	**★3175**
			2830-81
	RCA	GP509AD	1449-120
	Siliconix	**DG509AA**	**★3227**
			2830-59
		DG509AB	**★3227**
			2830-62
		DG509AC	**★3227**
			2830-63
5090	OEI	5090A	3398-109
	Signetics	**NE5090**	**★3726**
			2894-156
	Toshiba	TC5090	2837-21
5091	ITT	SBA5091	3382-71
	Mostek	MK5091	3382-74
	Toshiba	TC5091	2837-20
5092	Mostek	MK5092	3382-75
5094	Mostek	MK5094	3382-76
5098	Mostek	MK5098	¶ 412-19
50981	Mostek	MK50981	3378-82
			¶ 412-19
	Samsung	MK50981	3378-106

Arranged alphanumerically from left to right.

PART NUMBER INDEX

Base Number	Source	Device	Page-Line
50982	Mostek	MK50982	3378-83
			¶ 412-19
5099	Mostek	MK5099	¶ 412-19
50991	Mostek	MK50991	3378-84
50992	Mostek	MK50992	3378-85
			¶ 411-3
			¶ 412-19
	Samsung	MK50992	3378-107
50993	Samsung	MK50993	3378-108
50H000	Sharp	LR50H000	809-51
	Toshiba	**TC50H000**	**★1363**
			809-18
50H001	**Toshiba**	**TC50H001**	**★1363**
50H002	Sharp	LR50H002	827-188
50H4066			
	Toshiba	**TC50H4066**	**★1363**
50L15	**Raytheon**	**CGA50L15**	**★ 701**
			4454-8
51	**AD**	**AD51**	**★3508**
	Apex	**PA51**	**★3525**
			3330-49
			3331-90
			3357-51
		PA51A	**★3525**
			3348-31
			3360-32
			3330-47
			3331-73
			3352-40
		PA51M	**★3525**
			3348-32
			3360-33
			3330-48
			3331-74
			3352-41
	BinaryTech	SIBEC-51A	2015-3
		SIBEC-51B	2015-1
		SIBEC-51C	2015-2
510	**AD**	**AD510J**	**★3507**
			3339-7
		AD510K	**★3507**
			3341-43
			3337-42
		AD510L	**★3507**
			3332-24
			3341-7
			3335-46
		AD510S	**★3507**
			3341-44
			3337-43
	Barvon	BC510	4439-37
	Dionics	DI510	2877-26
	National	CIM-510	2030-17
	RCA	GP510AD	1449-125
	Sharp	SM510	1450-72
			1413-1
	SiliconSys	**SSI510**	**★3736**
	TI	**TL510**	**★ 719**
5100	Holt	HI-5100	4463-12
	LogicalDes	VME-5100D	2046-6
	MicroNet	**MN5100**	**★3203**
			2833-45
		MN5100H	**★3203**
			2833-46
	Plessey	CLA5100	4453-35
	Telmos	SD5100	2828-98
	TI	TMS5100	3323-127
51000	GTEMicro	51000B	4446-28
		G51000B	4446-29
	Samsung	**KS51000**	**★4746**
			1450-49
			1411-20
5101	**CTI**	**MA5101**	**★4001**
	DDC	DDC-5101	2833-33
	Datel	**ADC-5101**	**★3160**
			★3162
			2833-34
		ADC-5101E	**★3160**
			★3162
			2833-35
		ADC-5101H	**★3160**
			★3162
			2833-36
	Intel	5101	¶ 439-12
	ITT	ITT5101S	3834-6
	MicroNet	MN5101	2833-37
			(Continued)
5101	MicroNet	MN5101H	2833-38
	RCA	**MWS5101**	**★1673**
			★1676
	Sharp	LH5101	3834-1
		LH5101-30	3833-76
		LH5101-45	3833-108
		LH5101-L3	3833-122
		LH5101S	3834-7
		LH5101SM	3834-8
		LH5101W	3834-2
	SSS	BCM5101-4	3834-4
		SCM5101-1	3833-109
		SCM5101-1A	3833-92
		SCM5101-1B	3833-66
		SCM5101-1C	3833-58
		SCM5101-3	3833-123
	Telmos	SD5101	2828-97
5101DL3			
	RCA	MWS5101DL3	3833-90
5101EL2			
	RCA	MWS5101EL2	3833-65
5101EL3			
	RCA	MWS5101EL3	3833-91
5102	Aptek	MK5102-5	¶ 411-7
	Harris	HA-5102-2	3363-26
		HA-5102-5	3363-27
	Mostek	MK5102	¶ 411-4
		MK5102-5	3381-137
	Sharp	LH5102	3834-24
		LH5102-6	3834-21
		LH5102-8	3834-22
		LH5102W	3834-23
5103	Mostek	MK5103	¶ 411-4
		MK5103-5	3381-138
5104	Harris	HA-5104-2	3370-23
		HA-5104-5	3370-24
		HS5104RA	3370-51
		HS5104RH	**★ 669**
	OKI	MSM5104-2	3840-53
		MSM5104-3	3840-80
	RCA	CMM5104/1RZ	3840-81
	Sharp	LH5104-4	3840-103
	WinSystems	MCM-5104	2040-25
5106	**Reticon**	**RD5106**	**★3535**
			3398-42
51064	AT&T	M51064P-15	3827-72
5107	**Reticon**	**RD5107**	**★3535**
			3398-43
5108	Intersil	IH5108C	2830-171
		IH5108M	2830-170
	NEC	MC5108B	3308-33
	Reticon	**RD5108**	**★3535**
			3398-41
511	**Burr-Brown**	**OPA511**	**★3150**
			3330-57
		OPA511AM	**★3150**
			3357-48
	LTI	LD511	3307-33
			3316-82
	RCA	GP511AD	1449-119
	Sharp	SM511	1450-81
			1413-2
5110	**Intersil**	**IH5110**	**★3603**
			3404-26
	TI	TMS5110	3323-128
511000	**Hitachi**	**HM511000**	**★4032**
	Toshiba	**TC511000**	**★4263**
511001	**Toshiba**	**TC511001**	**★4263**
5111	**Intersil**	**IH5111**	**★3603**
			3404-27
5112	Harris	HA-5112	3334-228
		HA-5112-2	3363-28
		HA-5112-5	3363-29
	Intersil	**IH5112**	**★3603**
			3404-28
	Sanyo	LA5112	3326-8
5113	**Intersil**	**IH5113**	**★3603**
			3404-29
5114	**CTI**	**MA5114**	**★4001**
	Harris	HA-5114	3334-229
		HA-5114-2	3370-25
		HA-5114-5	3370-26
	Intersil	**IH5114**	**★3603**
			3404-30
	OKI	MSM5114	3836-117
			(Continued)
5114	OKI	MSM5114-2	3836-55
		MSM5114-3	3836-90
	RCA	CMM5114/1RZ	3836-91
		MWS5114-1	**★1673**
			★1676
			3836-92
		MWS5114-2	**★1673**
			★1676
			3836-79
		MWS5114-3	**★1673**
			★1676
			3836-56
	Sharp	LH5114-4	3836-118
5115	**Intersil**	**IH5115**	**★3603**
			3404-31
5116	Fairchild	5116	3377-140
	Mostek	MK5116	3377-145
	National	TP5116	3377-148
		TP5116A	3377-149
	SGS	M5116	3377-152
	Sharp	LH5116-15	3838-80
		LH5116-20	3839-3
5117	National	TP5117A	3377-138
	Sharp	LH5117-15	3838-81
		LH5117-20	3839-4
5118	Sharp	LH5118-15	3838-82
		LH5118-20	3839-5
	Signetics	**NE5118**	**★3725**
			2852-5
		SE5118	**★3725**
			2852-6
5119	**Signetics**	**NE5119**	**★3725**
			2851-23
		SE5119	**★3725**
			2851-24
512	**Burr-Brown**	**OPA512**	**★3150**
			3330-41
		OPA512BM	**★3150**
			3355-6
		OPA512SM	**★3150**
			3346-210
	CharlesRiver	CM-512	2043-24
		VCM-512	2045-60
		VEM-512	2045-49
	Cromemco	512MSU	2038-41
	Cybernetic	CY512	2895-80
			1458-40
	Dionics	DI512	2877-27
	Matrox	MIP-512	2034-42
		PIP-512	2031-15
	Onset	RAM-512	2030-14
	PlesseyMicro	PME 512EP	2045-51
		PME DB512EA	2045-47
		PME DB512EP	2045-48
	Plessey	PME-512EP	2046-3
		PME-DB512EA	2046-1
		PME-DB512EP	2046-4
		PSM-512A	2036-58
		PSM-512DA	2036-56
		PSM-512P	2036-57
	Reticon	RL512C	3400-38
		RL512EC	3400-39
		RL512G	3400-40
		RL512S	3400-41
		RL512SF	3400-42
		RL512SFX	3400-47
5120	Calmos	CA5120	4441-13
	GI	ROC5120	3853-41
	MicroNet	**MN5120**	**★3203**
			2834-25
		MN5120H	**★3203**
			2834-26
	NEC	MC5120	3308-34
	S-MOS	**SLA5120**	**★4752**
			4456-4
	SGS	LS5120	3405-12
51200	Mitsubishi	M51200	3313-29
	Samsung	KS51200	1450-50
			1411-21
51201	Mitsubishi	M51201	3312-2
51202	Mitsubishi	M51202	3313-28
51203	Mitsubishi	M51203	3313-26
51204	Mitsubishi	M51204	3313-25
51205	Mitsubishi	M51205	3312-1
51206	Mitsubishi	M51206	3313-24
51207	Mitsubishi	M51207	3314-48
51209	Mitsubishi	M51209	3316-38
5121	GI	ROC5121	3853-36
	MicroNet	MN5121	2834-27
		MN5121H	2834-28
	NEC	MC5121	3308-35
51216	**Dense-Pac**	**DPV51216**	**★4008**
			3825-23
5122	**Dense-Pac**	**DPS5122**	**★4008**
			3848-16
			3848-18
	GI	ROC5122	3852-72
	MicroNet	MN5122	2834-29
		MN5122H	2834-30
5123	MicroNet	MN5123	2834-31
		MN5123H	2834-32
5124	**Dense-Pac**	**DPD5124**	**★4008**
			3830-38
51258	Hitachi	HM51258-12	3828-105
		HM51258-15	3829-30
5126	**OKI**	**MSM5126-20**	**★4732**
			3838-117
		MSM5126-25	**★4732**
			3839-33
51268	Hitachi	HM51268-10	3828-82
5128	**Dense-Pac**	**DPV5128**	**★4008**
			3825-22
	OKI	**MSM5128**	**★4732**
			★4733
			3838-118
		MSM5128-12	**★4732**
			★4733
			3838-37
		MSM5128-15	**★4732**
			★4733
			3838-87
		MSM5128-20	**★4732**
			★4733
			3838-119
5129	OKI	MSM5129-15	3838-72
		MSM5129-20	3838-120
513	Dionics	DI513	2877-35
5130	Harris	HA-5130-2	3335-42
		HA-5130-5	3341-22
			3335-44
	MicroNet	**MN5130**	**★3203**
			2834-14
		MN5130H	**★3203**
			2834-15
5131	HybridSys	HS5131B	2836-36
		HS5131C	2836-37
	MicroNet	MN5131	2834-16
		MN5131H	2834-17
5132	MicroNet	MN5132	2834-18
		MN5132H	2834-19
51320	Mitsubishi	M51320	2829-11
			3326-94
51321	Mitsubishi	M51321	2829-12
			3326-95
5133	MicroNet	MN5133	2834-20
		MN5133H	2834-21
	SEEQ	5133-300	3822-47
		5133-4	3822-60
		5133-450	3822-72
5135	Harris	HA-5135-2	3335-43
		HA-5135-5	3341-23
			3335-45
514	Dionics	DI514	2877-36
	TI	**TL514M**	**★ 719**
			3313-43
5140	Dionics	DI5140	2876-115
	Goldstar	LL5140	4445-40
	Intersil	**IH5140C**	**★3196**
			2822-13
		IH5140M	**★3196**
			2822-4
	LSILogic	**LL5140**	**★4676**
			4450-3
	Maxim	IH5140C	2822-14
		IH5140M	2822-7
	MicroNet	**MN5140**	**★3203**
			2834-6
		MN5140H	**★3203**
			2834-7
	Siliconix	**DG5140A**	**★3223**
			(Continued)

¶ Indicates page number in Application Note Directory.
★ Indicates additional data is provided on the page noted.

Base Number	Source	Device	Page-Line
5140	**Siliconix**	**DG5140A**	**★3234**
			2822-2
		DG5140C	**★3223**
			★3234
			2822-9
51400	**RCA**	**PA51400**	**★4742**
			4454-20
5141	Harris	HA-5141	3333-13
			3334-91
			3355-57
			¶ 407-4
		HA-5141A	3333-10
			3355-12
	Intersil	**IH5141C**	**★3196**
			2822-64
		IH5141M	**★3196**
			2822-40
	Maxim	IH5141C	2822-65
		IH5141M	2822-8
	MicroNet	MN5141	2834-8
		MN5141H	2834-9
	Siliconix	**DG5141A**	**★3223**
			★3234
			2822-32
		DG5141C	**★3223**
			★3234
			2822-33
5142	Harris	HA-5142	3333-14
			3334-105
			3367-48
		HA-5142A	3333-11
			3366-49
	Intersil	**IH5142C**	**★3196**
			2825-1
		IH5142M	**★3196**
			2824-136
	Maxim	IH5142C	2825-2
		IH5142M	2824-137
	MicroNet	MN5142	2834-10
		MN5142H	2834-11
	Siliconix	**DG5142A**	**★3223**
			★3234
			2824-132
		DG5142C	**★3223**
			★3234
			2824-138
5143	**Intersil**	**IH5143C**	**★3196**
			2825-92
		IH5143M	**★3196**
			2825-66
	Maxim	IH5143C	2825-93
		IH5143M	2825-67
	MicroNet	MN5143	2834-12
		MN5143H	2834-13
	SEEQ	5143-2	3823-13
		5143-200	3823-14
		5143-250	3823-37
		5143-3	3823-61
		5143-300	3823-62
		5143-4	3823-78
		5143-450	3823-79
	Siliconix	**DG5143A**	**★3223**
			★3234
			2825-90
		DG5143C	**★3223**
			★3234
			2825-68
5144	Harris	HA-5144	3333-15
			3334-141
			3335-1
		HA-5144A	3333-12
			3372-29
	Intersil	**IH5144C**	**★3196**
			2826-87
		IH5144M	**★3196**
			2826-88
	Maxim	IH5144C	2826-89
		IH5144M	2826-90
	Siliconix	**DG5144A**	**★3223**
			★3234
			2826-78
		DG5144C	**★3223**
			★3234
			2826-80
5145	**Intersil**	**IH5145C**	**★3196**
			2827-7
			(Continued)
5145	**Intersil**	**IH5145M**	**★3196**
			2826-104
	Maxim	IH5145C	2827-8
		IH5145M	2826-105
	Siliconix	**DG5145A**	**★3223**
			★3234
			2826-100
		DG5145C	**★3223**
			★3234
			2826-106
5147	Harris	HA-5147-2	3357-178
		HA-5147-5	3357-179
		HA-5147A-2	3357-164
		HA-5147A-5	3357-165
5148	**Intersil**	**IH5148**	**★3196**
			2827-112
5149	**Intersil**	**IH5149**	**★3196**
			2827-106
515	**AD**	**AD515J**	**★3507**
			3332-17
			3346-155
		AD515K	**★3507**
			3332-9
			3343-44
		AD515L	**★3507**
			3332-4
			3343-43
	Barvon	BC515	4440-5
			4440-6
5150	**Intersil**	**IH5150**	**★3196**
			2822-1
	MicroNet	**MN5150**	**★3203**
			2834-22
	Signetics	**NE5150**	**★3689**
			★3725
			★3731
			2849-20
51500	GTEMicro	51500B	4446-30
		G51500B	4446-31
5151	Fairchild	5151	3377-141
	Harris	HA-5151-2	3346-121
		HA-5151-5	3346-219
	Intersil	**IH5151**	**★3196**
			2827-107
	Mostek	MK5151	3377-146
	Signetics	**NE5151**	**★3689**
			★3725
			★3731
			2849-19
5152	Harris	HA-5152-2	3363-24
		HA-5152-5	3363-65
5154	Harris	HA-5154-2	3363-25
		HA-5154-5	3363-66
51551	Mitsubishi	M51551	2829-13
5156	Fairchild	5156	3377-45
	Mostek	MK5156	3377-48
	National	TP5156	3377-50
		TP5156A	3377-51
	NEC	MC5156	3308-36
	SGS	M5156	3377-54
5157	NEC	MC5157	3308-37
516	Harris	HI516-2	2831-82
		HI516-5	2831-83
5160	Harris	HA-5160	3331-57
			3334-257
		HA-5160-2	3346-168
		HA-5160-5	3346-170
5162	Harris	HA-5162	3331-58
			3334-258
		HA-5162-5	3357-119
5165	**OKI**	**MSM5165-10**	**★4732**
			3843-22
		MSM5165-15	**★4732**
			3843-68
51660	Mitsubishi	M51660	2895-122
5167	Sharp	LH5167-55	3844-44
517	**AD**	**AD517J**	**★3507**
			3340-15
		AD517K	**★3507**
			3341-48
			3337-36
		AD517L	**★3507**
			3332-25
			3335-32
		AD517S	**★3507**
			3341-49
			(Continued)
517	AD	AD517S	3337-37
	Intel	iSBC517	2031-46
5170	Harris	HA-5170	¶ 406-10
		HA-5170-2	3342-9
		HA-5170-5	3342-26
	LSILogic	**LL5170**	**★4676**
			4450-7
	Mostek	MK5170	3378-37
	Signetics	**NE5170**	**★3693**
			★3726
			2881-56
5171	Samsung	KS5171	3320-59
51712	Mitsubishi	M51712	3400-113
51714	Mitsubishi	M51714	2895-119
51723	Mitsubishi	M51723	3399-100
51724	Mitsubishi	M51724	3400-114
51728	Mitsubishi	M51728	2896-1
5175	Mostek	MK5175	3378-127
5176	Mostek	MK5176	3379-5
5177	Mostek	MK5177	3379-6
518	**AD**	**AD518J**	**★3508**
			3355-51
		AD518K	**★3508**
			3350-21
		AD518S	**★3508**
			3350-22
	Harris	**HI518-2**	**★3178**
			2831-23
		HI518-5	**★3178**
			2831-24
5180	Dionics	DI5180	2876-116
	Harris	HA-5180	3332-14
		HA-5180-2	3346-158
		HA-5180-5	3346-159
		HA-5180A	3332-15
		HA-5180A-2	3340-88
		HA-5180A-5	3340-89
	Signetics	**NE5180**	**★3693**
			★3726
			2886-3
5181	Motorola	MHW5181	3324-87
	Signetics	**NE5181**	**★3693**
			★3726
			2886-4
5182	Motorola	MHW5182	3324-88
51832	**Toshiba**	**TC51832**	**★4263**
51843	Mitsubishi	M51843	3383-68
51849	Mitsubishi	M51849	3383-6
5188	**OKI**	**MSM5188**	**★4732**
5189	Samsung	KS5189	3320-134
519	Intel	iSBC519	2032-1
5190	Harris	HA-5190	3331-50
			3354-23
			¶ 406-9
			¶ 410-3
5192	NEC	MC5192	3308-38
5194	Samsung	KS5194	3320-136
5195	Harris	HA-5195	3331-51
			3354-31
			¶ 406-9
			¶ 410-3
51970	Mitsubishi	M51970	2896-2
5198	Samsung	KS5198	3320-128
5199	Samsung	KS5199A	3320-129
51B33	SEEQ	51B33-200	3813-77
51C256	Hyundai	HY51C256L-10	3828-83
		HY51C256L-12	3828-106
		HY51C256L-15	3829-31
		HY51C256L-20	3829-61
	Intel	51C256H-10	3828-84
		51C256H-12	3828-107
		51C256H-15	3829-32
		51C256H-20	3829-62
		51C256L-15	3829-33
		51C256L-20	3829-63
51C259	Intel	51C259H-15	3827-120
		51C259H-20	3828-5
		51C259L-15	3827-121
		51C259L-20	3828-6
		M51C259H-20	3828-4
51C64	Hyundai	HY51C64-10	3827-7
		HY51C64-12	3827-18
		HY51C64-15	3827-42
		HY51C64L-10	3827-8
		HY51C64L-12	3827-19
		HY51C64L-15	3827-43
			(Continued)
51C64	Intel	51C64H-10	3827-9
		51C64H-12	3827-20
		51C64L-10	3827-10
		51C64L-12	3827-21
51C66	**Intel**	**51C66-25**	**★4081**
			3846-30
		51C66-30	**★4081**
			3846-31
		51C66-35	**★4081**
			3846-32
		51C66-35L	**★4081**
			3846-33
51C67	**Intel**	**51C67-35**	**★4082**
			3844-17
51C68	**Intel**	**51C68-30**	**★4083**
			3842-107
		51C68-35	**★4083**
			3842-109
		51C68-35L	**★4083**
			3842-110
51C69	**Intel**	**51C69-25**	**★4084**
			3842-106
		51C69-30	**★4084**
			3842-108
		51C69-35	**★4084**
			3842-111
		51C69-35L	**★4084**
			3842-112
52	**AD**	**52**	**★3507**
	BinaryTech	SIBEC-52A	2015-7
		SIBEC-52B	2015-5
		SIBEC-52BASIC	2013-13
		SIBEC-52C	2015-6
	Burr-Brown	PCM52	¶ 389-2
		VFC52	**★3148**
			3405-94
		VFC52M	**★3148**
			3405-95
	NCR	ADP-52	2038-45
520	Barvon	BC520	4439-38
			4440-10
			4440-11
	LogicDev	LPR520	844-96
		LPR520C	837-82
		LPR520M	837-83
	Sharp	SM520	1450-71
			1413-3
	Signetics	TCA520B	3355-16
	SiliconSys	**SSI520**	**★3736**
	Siliconix	**SI520**	**★3248**
			2835-48
			3399-32
	Telefunken	TBA520	3325-26
5200	DDC	DDC-5200-1	2842-26
		DDC5200-3	2842-30
	Intersil	**IH5200**	**★3196**
			2822-58
		IH5200C	**★3196**
			2822-75
		IM5200	4473-83
	MicroNet	**MN5200**	**★3203**
			2842-34
		MN5200H	**★3203**
			2842-35
	Plessey	CLA5200	4453-37
	Siemens	SDA5200	843-152
	Telmos	SD5200	2828-99
	TI	TMS5200	3323-129
52000	GTEMicro	52000B	4446-33
		G52000B	4446-32
	Samsung	**KS52000**	**★4746**
			1450-51
			1411-22
52001	**NCR**	**NCR52001**	**★4128**
			★4130
			3811-49
			¶ 440-4
		NCR 52001	¶ 439-20
52002	NCR	52002	¶ 439-20
		NCR52002	**★4128**
			★4130
			3811-69
			¶ 440-4
52004	NCR	52004	¶ 439-20
		NCR52004	**★4128**
			★4130
			(Continued)

Arranged alphanumerically from left to right.

Base Number	Source	Device	Page-Line
52004	NCR	NCR52004	3811-83
			¶ 440-4
		NCR52004-28	★ **4128**
			★ **4130**
			3811-85
5201	AD	AD5201B	2842-12
		AD5201T	2842-13
	DDC	DDC-5201-1	2842-27
		DDC5201-3	2842-31
	Intersil	**IH5201C**	★ **3196**
			2823-66
		IH5201M	★ **3196**
			2823-55
	MicroNet	MN5201	2842-36
		MN5201H	2842-37
5202	AD	AD5202B	2842-14
		AD5202T	2842-15
	DDC	DDC-5202-1	2842-28
		DDC5202-3	2842-32
	MicroNet	MN5202	2842-38
		MN5202H	2842-39
	Signetics	**NE5202**	★ **3729**
5203	MicroNet	MN5203	2842-19
		MN5203H	2842-20
	National	MM5203	¶ 442-3
5204	AD	AD5204B	2845-11
		AD5204T	2842-16
	MicroNet	MN5204	2842-21
		MN5204H	2842-22
	National	MM5204	¶ 436-14
	OKI	**MSM5204**	★ **4733**
			2837-18
	Samsung	KS5204	3320-60
5205	AD	AD5205B	2842-17
		AD5205T	2842-18
	MicroNet	MN5205	2842-23
		MN5205H	2842-24
	OKI	**MSM5205**	★ **4733**
			3323-141
	Samsung	KS5205	3320-61
	Signetics	**NE5205**	★ **3711**
			3308-15
52051	Mitsubishi	M52051	3383-37
5206	DDC	DDC-5206-1	2842-29
		DDC5206-3	2842-33
	MicroNet	MN5206	2842-40
		MN5206H	2842-41
	Samsung	KS5206	3320-62
5207	Samsung	KS5207	3320-63
5208	Intersil	IH5208C	2830-69
		IH5208M	2830-68
521	AD	AD521J	3306-86
		AD521K	3306-87
		AD521L	3306-88
		AD521S	3306-89
	LogicDev	LPR521	844-97
		LPR521C	837-84
		LPR521M	837-85
	Plessey	SL521	3308-58
			¶ 409-12
	Sanyo	STK521	3387-14
	Siemens	TAA521	3356-38
	Signetics	**NE521**	★ **3691**
			★ **3725**
			3314-54
		SE521	★ **3691**
			★ **3725**
			3314-55
	SiliconSys	**SSI521**	★ **3736**
5210	Calmos	CA5210	4441-18
	DDC	DDC-5210-1	2840-49
		DDC5210-3	2840-53
	Datel	**ADC-5210**	★ **3160**
			★ **3162**
			2841-1
		ADC-5210E	★ **3160**
			★ **3162**
			2841-2
		ADC-5210H	★ **3160**
			★ **3162**
			2841-3
	HybridSys	HS5210B	2845-52
		HS5210C	2845-53
	MicroNet	**MN5210**	★ **3203**
			2841-13
		MN5210H	★ **3203**
			(Continued)
5210	MicroNet	MN5210H	2841-14
	S-MOS	**SLA5210**	★ **4752**
			4456-7
	TeledyneP	TP5210	2843-31
		TP5210-83	2843-32
5211	AD	AD5211B	2841-21
		AD5211T	2841-22
	DDC	DDC-5211-1	2840-50
		DDC5211-3	2840-54
	Datel	**ADC-5211**	★ **3160**
			★ **3162**
			2841-4
		ADC-5211E	★ **3160**
			★ **3162**
			2841-5
		ADC-5211H	★ **3160**
			★ **3162**
			2841-6
	HybridSys	HS5211B	2845-54
		HS5211C	2845-55
	MicroNet	MN5211	2841-15
		MN5211H	2841-16
	TeledyneP	TP5211	2843-33
		TP5211-83	2843-34
52116	National	MM52116	3849-59
		MM52116FDW	3808-6
		MM52116FDX	3808-15
5212	AD	AD5212B	2841-23
		AD5212T	2841-24
	DDC	DDC-5212-1	2840-51
		DDC5212-3	2840-55
	Datel	**ADC-5212**	★ **3160**
			★ **3162**
			2841-7
		ADC-5212E	★ **3160**
			★ **3162**
			2841-8
		ADC-5212H	★ **3160**
			★ **3162**
			2841-9
	HybridSys	HS5212B	2846-1
		HS5212C	2846-2
	MicroNet	MN5212	2841-17
		MN5212H	2841-18
	TeledyneP	TP5212	2843-35
		TP5212-83	2843-36
5213	**Datel**	**ADC-5213**	★ **3160**
			★ **3162**
			2840-33
		ADC-5213E	★ **3160**
			★ **3162**
			2840-34
		ADC-5213H	★ **3160**
			★ **3162**
			2840-35
	HybridSys	HS5213B	2846-3
		HS5213C	2846-4
	MicroNet	MN5213	2840-42
		MN5213H	2840-43
	Rockwell	R5213-25	3812-42
		R5213-3	3812-68
		R5213-35	3812-91
	SEEQ	5213	¶ 434-6
	TeledyneP	TP5213	2843-37
		TP5213-83	2843-38
52132	National	MM52132	3850-10
5214	AD	AD5214B	2841-25
		AD5214T	2841-26
	Datel	**ADC-5214**	★ **3160**
			★ **3162**
			2840-36
		ADC-5214E	★ **3160**
			★ **3162**
			2840-37
		ADC-5214H	★ **3160**
			★ **3162**
			2840-38
	HybridSys	HS5214B	2846-5
		HS5214C	2846-6
	MicroNet	MN5214	2840-44
		MN5214H	2840-45
	TeledyneP	TP5214	2843-39
		TP5214-83	2843-40
5215	AD	AD5215B	2841-27
		AD5215T	2841-28
	Datel	**ADC-5215**	★ **3160**
			(Continued)
5215	**Datel**	**ADC-5215**	★ **3162**
			2840-39
		ADC-5215E	★ **3160**
			★ **3162**
			2840-40
		ADC-5215H	★ **3160**
			★ **3162**
			2840-41
	HybridSys	HS5215B	2846-7
		HS5215C	2846-8
	MicroNet	MN5215	2840-46
		MN5215H	2840-47
	TeledyneP	TP5215	2843-41
		TP5215-83	2843-42
5216	DDC	DDC-5216-1	2840-52
		DDC5216-3	2840-56
	Datel	**ADC-5216**	★ **3160**
			★ **3162**
			2841-10
		ADC-5216E	★ **3160**
			★ **3162**
			2841-11
		ADC-5216H	★ **3160**
			★ **3162**
			2841-12
	HybridSys	HS5216B	2846-9
		HS5216C	2846-10
	MicroNet	MN5216	2841-19
		MN5216H	2841-20
	TeledyneP	TP5216	2843-43
		TP5216-83	2843-44
52164	National	MM52164	3851-74
5217	TeledyneP	TP5217	2843-45
		TP5217-83	2843-46
5218	OKI	MSM5218	3323-107
5219	**OKI**	**M5219B**	★ **4733**
			2874-96
		MSM5219	2877-3
522	AD	AD522	¶ 404-7
		AD522A	3306-79
			3340-78
		AD522B	3306-80
			3340-40
		AD522S	3306-81
			3340-41
	CTI	MA522	3378-141
	Sanyo	STK522	3388-114
	Signetics	**NE522**	★ **3725**
			3314-56
		SE522	★ **3725**
			3314-57
5220	Goldstar	LL5220	4445-45
	LSILogic	**LL5220**	★ **4676**
			4450-13
	TI	TMS5220	3323-130
52200	**RCA**	**PA52200**	★ **4742**
			4454-21
5221	**OKI**	**M5221**	★ **4733**
			2874-97
52210	**NCR**	**NCR52210**	★ **4128**
			★ **4130**
			3811-22
			¶ 440-4
		NCR 52210	¶ 439-21
52211	NCR	52211	¶ 439-21
		NCR52211	★ **4128**
			★ **4130**
			3811-45
			¶ 440-4
52212	NCR	52212	¶ 439-21
		NCR52212	★ **4128**
			★ **4130**
			3811-57
			¶ 440-4
5229	NEC	MC5229	3308-39
523	Plessey	SL523	3308-59
	Sanyo	STK523	3389-77
5230	Mitsubishi	M5230	3395-53
	Signetics	**NE5230**	★ **3707**
			★ **3729**
		SA5230	★ **3707**
		SAA5230	★ **3732**
		SE5230	★ **3707**
5231	Mitsubishi	M5231	3394-26
5233	SSS	SCL5233	3319-118
			3320-100
5235	Intel	5235	¶ 439-12
5238	**OKI**	**M5238**	★ **4733**
			2874-91
		MSM5238	2877-106
	SSS	SCL5238	3320-101
524	**AD**	**AD524A**	★ **3509**
			3340-64
		AD524B	★ **3509**
			3339-4
		AD524C	★ **3509**
			3337-45
		AD524S	★ **3509**
			3339-13
	Harris	HI524-2	2830-88
		HI524-5	2830-89
5240	AD	AD5240K	2840-1
		AD5240S	2840-2
		AD5240ZK	2840-3
		AD5240ZS	2840-4
	DDC	DDC-5240-10	2838-21
		DDC-5240-12	2840-6
			2844-18
	Dionics	DI5240	2876-117
	MicroNet	**MN5240-10**	★ **3203**
			2838-20
		MN5240-12	★ **3203**
			2840-5
	Signetics	**NE5240**	★ **3694**
			★ **3727**
			3316-170
		SAA5240	★ **3732**
			★ **3733**
	Siliconix	**DG5240A**	★ **3223**
			★ **3237**
			2822-3
		DG5240C	★ **3223**
			★ **3237**
			2822-10
5241	**Siliconix**	**DG5241A**	★ **3223**
			★ **3237**
			2822-34
		DG5241C	★ **3223**
			★ **3237**
			2822-35
5242	**Siliconix**	**DG5242A**	★ **3223**
			★ **3237**
			2824-133
		DG5242C	★ **3223**
			★ **3237**
			2824-139
5243	MicroNet	MN5243	2839-42
	Siliconix	**DG5243A**	★ **3223**
			★ **3237**
			2825-91
		DG5243C	★ **3223**
			★ **3237**
			2825-69
5244	Intel	5244	¶ 439-12
	MicroNet	MN5244	2843-17
	Siliconix	**DG5244A**	★ **3223**
			★ **3237**
			2826-79
		DG5244C	★ **3223**
			★ **3237**
			2826-81
5245	**MicroNet**	**MN5245A**	★ **3203**
			2839-33
	Siliconix	**DG5245A**	★ **3223**
			★ **3237**
			2826-101
		DG5245C	★ **3223**
			★ **3237**
			2826-107
5246	MicroNet	MN5246	2843-16
5247	MicroNet	MN5247	2839-32
5248	**OKI**	**MSM5248**	★ **4733**
			3323-142
5249	OKI	MSM5249	3378-94
525	**CTI**	**MA525**	★ **3529**
			3378-57
	Cybernetic	CY525	2895-81
			3404-112
	Fairchild	**F525**	★ **1050**
	Sharp	SM525	1413-4
5250	HybridSys	HS5250B	2845-14
		HS5250C	2842-42
			(Continued)

¶ Indicates page number in Application Note Directory.
★ Indicates additional data is provided on the page noted.

Base Number	Source	Device	Page-Line
5250	**MicroNet**	**MN5250**	★**3203**
			2842-46
		MN5250H	★**3203**
			2842-47
5251	HybridSys	HS5251B	2845-15
		HS5251C	2842-43
	MicroNet	MN5251	2842-48
		MN5251H	2842-49
5252	HybridSys	HS5252B	2845-16
		HS5252C	2842-44
	MicroNet	MN5252	2842-50
		MN5252H	2842-51
5253	HybridSys	HS5253B	2845-17
		HS5253C	2842-45
	MicroNet	MN5253	2842-52
		MN5253H	2842-53
5257	National	MM5257	3840-110
			¶ 440-9
		MM5257-25	3840-72
		MM5257-25L	3840-73
		MM5257-3	3840-93
		MM5257-3L	3840-94
		MM5257L	3840-111
5259	**OKI**	**M5259**	★**4733**
			2874-94
526	**Siliconix**	**DG526A**	★**3227**
			2831-77
		DG526B	★**3227**
			2831-78
		DG526C	★**3227**
			2831-79
5260	**MicroNet**	**MN5260**	★**3203**
			2846-28
	OKI	**M5260**	★**4733**
			2874-103
5262	**CTI**	**MA5262**	★**3530**
			3378-55
5263	**CTI**	**MA5263**	★**3530**
			3378-56
	MicroNet	MN5263	2846-15
5265	**OKI**	**M5265**	★**4733**
			2874-100
52670	Mitsubishi	M52670	2832-2
5268	STI	STI-5268	2878-1
			3377-57
527	CTI	MA527	3378-145
	Signetics	**NE527**	★**3691**
			★**3725**
			3313-7
		SE527	★**3691**
			★**3725**
			3312-55
	Siliconix	**DG527A**	★**3227**
			2831-14
		DG527B	★**3227**
			2831-15
		DG527C	★**3227**
			2831-16
5271	**CTI**	**MA5271**	★**3531**
			3378-58
5272	**CTI**	**MA5272**	★**3531**
			3378-50
5273	**CTI**	**MA5273**	★**3531**
			3378-51
5274	**CTI**	**MA5274**	★**3531**
			3378-52
5278	**OKI**	**M5278**	★**4733**
			2874-98
5279	**OKI**	**M5279**	★**4733**
			2874-101
528	**CTI**	**MA528**	★**3532**
			3378-142
	Siliconix	**DG528A**	★**3226**
			★**3244**
			2831-17
		DG528C	★**3226**
			★**3244**
			2831-22
5280	Dionics	DI5280	2876-118
	MicroNet	**MN5280**	★**3203**
			2847-29
	OKI	**M5280**	★**4733**
			2874-85
52801	**NCR**	**NCR52801**	★**4128**
			3811-8
		NCR 52801	¶ 434-2

Base Number	Source	Device	Page-Line
5282	MicroNet	MN5282	2847-24
	OKI	**M5282**	★**4733**
			2874-86
52832	NCR	52832/64	¶ 434-13
		NCR52832	★**4129**
			3812-121
			¶ 434-4
			¶ 434-5
			¶ 434-17
		NCR 52832	¶ 434-1
5284	**MicroNet**	**MN5284**	★**3203**
			2847-17
	SSS	SCL5284	3323-64
5285	SSS	SCL5285	3323-65
52864	NCR	52864	¶ 434-1
		NCR52864	★**1429**
			★**4129**
			3811-31
			¶ 434-4
			¶ 434-5
			¶ 434-17
		NCR52864HR	★**1429**
			★**4129**
			3813-74
529	**Signetics**	**NE529**	★**3723**
			3313-8
		SE529	★**3723**
			3312-56
	Siliconix	**DG529A**	★**3227**
			★**3244**
			2830-90
		DG529C	★**3227**
			★**3244**
			2830-91
5290	**MicroNet**	**MN5290**	★**3203**
			2847-11
	National	MM5290	¶ 437-19
		MM5290-1	3826-50
		MM5290-2	3826-59
		MM5290-3	3826-73
		MM5290-4	3826-87
5291	MicroNet	MN5291	2847-12
5295	National	NMC5295	¶ 438-16
5298	**OKI**	**M5298**	★**4733**
			2874-99
52981	CTI	52981	3378-65
5299	**OKI**	**M5299**	★**4733**
			2874-102
52B13	SEEQ	52B13	¶ 434-15
		52B13-200	★**4144**
			3812-20
		52B13-250	★**4144**
			3812-46
		52B13-350	★**4144**
			3812-95
		52B13H-200	★**4144**
			3812-22
		52B13H-250	★**4144**
			3812-47
		52B13H-350	★**4144**
			3812-98
		M52B13-250	★**4144**
			3812-59
		M52B13-300	★**4144**
			3812-73
		M52B13-350	★**4144**
			3812-106
		M52B13H-250	★**4144**
			3812-60
		M52B13H-300	★**4144**
			3812-74
		M52B13H-350	★**4144**
			3812-107
52B33	Rockwell	R52B33-2	3813-24
		R52B33-25	3813-39
		R52B33-3	3813-50
		R52B33-35	3813-67
	SEEQ	52B33	¶ 434-12
		52B33-200	★**4144**
			3813-78
		52B33-250	★**4144**
			3813-79
		52B33-3	★**4144**
			3813-52
		52B33-300	★**4144**
			3813-53
			(Continued)

Base Number	Source	Device	Page-Line
52B33	**SEEQ**	**52B33-350**	★**4144**
			3813-83
		52B33H-200	★**4144**
			3813-27
		52B33H-250	★**4144**
			3813-40
		52B33H-3	★**4144**
			3813-54
		52B33H-300	★**4144**
			3813-55
		M52B33-300	★**4144**
			3813-45
		M52B33H-300	★**4144**
			3813-59
53	Burr-Brown	PCM53	¶ 389-2
		PCM53J-I	★**3147**
			2873-1
		PCM53J-V	★**3147**
			2873-6
		PCM53K-I	★**3147**
			2871-46
		PCM53K-V	★**3147**
			2872-20
	Chrislin	CI-V53	2043-7
530	AD	AD530	¶ 422-14
	CTI	MA530	3378-144
	LTI	WE530	3307-45
			3316-96
		WL530	3307-46
			3316-97
		WV530	3307-48
			3316-99
	MicroInds	BLC530	2035-42
	SGS	L530	2835-38
	Sharp	SM530	1450-82
			1413-5
	Signetics	**NE530**	★**3721**
			3353-23
		SE530	★**3721**
			★**3729**
			3346-94
	Telefunken	TBA530	3325-27
5300	Calmos	CA5300	4441-21
	Plessey	CLA5300	4453-39
	S-MOS	**SLA5300**	★**4752**
			4456-9
	Weitek	WTE5300	2037-1
53001	NCR	NCR53001	¶ 434-14
53002	NCR	NCR53002	¶ 434-14
53004	NCR	NCR53004	¶ 434-14
53012	Sharp	LH53012	3853-67
5303	National	MM5303	¶ 371-3
5307	National	MM5307	890-13
			2900-25
5309	National	MM5309	¶ 429-2
531	AD	AD531	¶ 422-14
	CTI	**MA531**	★**3532**
			3378-143
	LTI	WS531	3307-47
			3316-98
	Plessey	SL531C	3308-51
	Sanyo	STK531	3387-73
	Sharp	SM531	1450-76
			1413-6
	Signetics	**NE531**	★**3729**
			3355-56
		SE531	★**3729**
			3353-38
	SiliconSys	**SSI531**	★**3736**
			2892-21
5310	Samsung	KS5310A	3320-111
		KS5310B	3320-112
		KS5310C	3320-113
53100	National	MM53100	¶ 417-15
531000	**OKI**	**MSM531000**	★**4733**
			3853-68
	Toshiba	TC531000	3853-79
5310000			
	Toshiba	**TC5310000**	★**4263**
53107	National	MM53107	834-123
			¶ 417-15
53108	National	MM53108	3320-52
5311	National	MM5311	¶ 429-2
	Samsung	KS5311A	3320-114
		KS5311B	3320-115
		KS5311C	3320-116

Base Number	Source	Device	Page-Line
53110	National	MM53110	3320-90
53113	National	MM53113	3320-69
5312	National	MM5312	¶ 429-2
53124	National	MM53124	3320-70
53125	National	MM53125	3382-80
53127	Sharp	LH53127	3852-21
53128	**RCA**	**CDM53128**	★**1673**
			★**1677**
			3852-19
	Sharp	LH53128	3852-70
53129	Sharp	LH53129	3852-71
		LH53129A	3852-69
5313	Samsung	KS5313	3320-117
53130	National	MM53130	3382-81
5314	Samsung	KS5314	3320-118
53143	National	MM53143	3378-89
53144	National	MM53144	3378-90
5315	National	MM5315	¶ 429-2
5316	**Mostek**	**MK5316**	★**3608**
			3377-82
53190	National	MM53190	3378-91
532	AD	AD532	¶ 422-14
		AD532J	★**3516**
			3400-140
		AD532K	★**3516**
			3400-141
		AD532S	★**3516**
			3400-142
	Plessey	SL532C	3308-52
	Sanyo	STK532	3389-17
	Signetics	**NE532**	★**3729**
			3334-126
			3366-54
		SA532	★**3729**
			3367-56
		SE532	★**3729**
			3334-127
			3365-38
	Sprague	UHC/D-532	864-61
			2898-110
		UHP-532	★**3269**
			864-65
			2898-114
	TI	**TLC532AM**	★ **720**
			2834-37
5320	**Burr-Brown**	**SHC5320K**	★**3148**
			3403-174
		SHC5320S	★**3148**
			3403-175
	Goldstar	LL5320	4445-48
	Harris	HA-5320	¶ 407-6
		HA-5320-2	3404-14
		HA-5320-5	3404-15
		HA-5320-8	3404-16
	LSILogic	**LL5320**	★**4676**
			4450-18
	Mostek	**MK5320**	★**3608**
	STDMicro	5320	2019-36
53200	**RCA**	**PA53200**	★**4742**
			4454-22
5320000			
	Toshiba	**TC5320000**	★**4263**
5321	STDMicro	5321	2021-1
5322	STDMicro	5322	2021-2
53226	National	MM53226	3323-18
5323	STDMicro	5323	2019-37
5324	STDMicro	5324	2019-38
53256	**OKI**	**MSM53256**	★**4733**
			3852-94
	RCA	**CDM53256**	★**1673**
			★**1678**
			3852-116
	Sharp	LH53256	3853-34
	Toshiba	TC53256	3846-67
53257	Sharp	LH53257	3852-124
	Toshiba	**TC53257**	★**4263**
			3852-98
5327	STDMicro	5327	2021-3
5328	STDMicro	5328	2021-4
5329	STDMicro	5329	2021-5
533	AD	AD533	¶ 422-14
		AD533J	3400-143
		AD533K	3400-144
		AD533L	3400-145
		AD533S	3400-146
	Sanyo	STK533	3389-110
			(Continued)

Arranged alphanumerically from left to right.

Base Number	Source	Device	Page-Line
533	Sprague	UHC/D-533	864-62
			2898-111
		UHP-533	★ **3269**
			864-66
			¶ 398-7
			2898-115
	TI	**TLC533AM**	★ **720**
			2834-47
5330	**Harris**	**HA-5330-2**	★ **3171**
			3404-17
		HA-5330-5	★ **3171**
			3404-18
		HA-5330-8	★ **3171**
			3404-19
	National	MM5330	¶ 389-5
5331	SSS	SCL5331-5	3328-16
		SCL5331-6	3328-17
5332	**Exar**	**XR5332**	★ **3556**
	RCA	**CDM5332**	★ **1673**
			★ **1677**
			★ **1678**
			3849-116
	Sharp	LH5332	3849-125
	SSS	SCL5332	3328-18
	Toshiba	TC5332	3849-126
5333	**RCA**	**CDM5333**	★ **1673**
			★ **1677**
			3849-117
	Toshiba	TC5333	3849-127
5334	SSS	SCL5334	3328-19
	Toshiba	TC5334	3850-1
5335	Toshiba	TC5335	3850-2
534	AD	AD534	¶ 391-17
			¶ 422-14
		AD534J	★ **3516**
			★ **3518**
			3400-147
		AD534K	★ **3516**
			★ **3518**
			3400-148
		AD534L	★ **3516**
			★ **3518**
			3400-149
		AD534S	★ **3516**
			★ **3518**
			3400-150
		AD534T	★ **3516**
			★ **3518**
			3400-151
	Burr-Brown	**MPY534**	★ **3151**
			3400-124
	Comark	MS-534	2034-17
	Intel	iSBC534	2031-44
	Intersil	**AD534**	★ **3200**
	Signetics	**SA534**	★ **3729**
			3373-5
5340	Samsung	KS5340	3320-119
5341	Intersil	IH5341	2827-113
	Maxim	IH5341	2827-114
	SSS	SCL5341	3328-20
535	AD	AD535J	3399-71
		AD535K	3399-72
	LTI	WC535	3307-44
			3316-95
		WV535	3307-49
			3316-100
5350	**Signetics**	**SAA5350**	★ **3719**
			★ **3732**
			3381-93
53512	Sharp	LH53512	3853-66
5352	Maxim	IH5352	2828-2
536	AD	536A	¶ 391-17
		AD536	¶ 390-12
			¶ 422-14
		AD536A	¶ 391-18
			¶ 392-1
		AD536AJ	★ **3517**
			★ **3521**
			3403-138
		AD536AK	★ **3517**
			★ **3521**
			3403-139
		AD536AS	★ **3517**
			★ **3521**
			3403-140
5362	Intersil	IH5362	2827-108

Base Number	Source	Device	Page-Line
5364	GTEMicro	G5364-25	3850-89
		G5364-3	3851-18
		G5364-4	3851-68
	RCA	**CDM5364**	★ **1673**
			★ **1677**
			3850-93
	Toshiba	**TC5364**	★ **4263**
			3850-99
5365	GTEMicro	G5365-25	3850-95
		G5365-3	3851-19
		G5365-4	3851-69
	RCA	**CDM5365**	★ **1673**
			★ **1677**
			3850-98
	Toshiba	**TC5365**	★ **4263**
			3850-100
5366	Sharp	LH5366	3851-91
		LH5366A	3851-90
		LH5366S	3851-92
	Toshiba	**TC5366**	★ **4263**
			3850-101
5367	Sharp	LH5367	3851-70
5368	National	MM5368	834-143
5369	National	MM5369	834-144
537	AD	AD537	¶ 387-9
		AD537J	3405-58
		AD537K	3405-59
		AD537S	3405-60
5370	**Mostek**	**MK5370**	★ **3610**
5371	**Mostek**	**MK5371**	★ **3610**
5372	**Mostek**	**MK5372**	★ **3610**
5374	Mostek	MK5374	3379-8
5375	**Mostek**	**MK5375**	★ **3609**
			3379-7
5376	Mostek	MK5376	3379-9
538	**AD**	**AD538**	★ **3516**
			★ **3519**
	Signetics	**NE538**	★ **3729**
			3353-24
		SE538	★ **3729**
			3346-93
5380	AMD	5380	1468-47
	Mostek	MK5380	3382-77
			¶ 412-6
	NCR	**NCR5380**	★ **3214**
			1468-39
	Samsung	KS5380	3320-120
5381	NCR	NCR5381	1468-41
5384	NEC	MC5384	3308-40
5385	NCR	NCR5385	1468-40
	NEC	MC5385	3308-41
5386	**NCR**	**NCR5386**	★ **3214**
	NEC	MC5386	3308-42
5387	National	MM5387	3320-53
5388	NEC	µPD5388	3320-56
5389	Mostek	MK5389	3382-78
539	**AD**	**AD539J**	★ **3516**
			★ **3520**
			3400-119
		AD539K	★ **3516**
			★ **3520**
			3400-120
		AD539S	★ **3516**
			★ **3520**
			3400-121
	Harris	**HI539-2**	★ **3179**
			2830-66
		HI539-5	★ **3179**
			2830-67
5390	Samsung	KS5390	3321-11
5393	National	MM5393	3378-92
5394	National	MM5394	3378-93
5395	National	MM5395	3382-82
5396	Sharp	LH5396	3851-97
		LH5396A	3851-96
		LH5396S	3851-98
53D1641			
	MMI	**53D1641**	★ **4101**
			3819-108
53DA1643			
	MMI	**53DA1643**	★ **4101**
			3819-109
53DA441			
	MMI	**53DA441**	★ **4101**
			3816-79

Base Number	Source	Device	Page-Line
53DA442			
	MMI	**53DA442**	★ **4101**
			3816-80
53DA841			
	MMI	**53DA841**	★ **4101**
			3817-165
53RA1681			
	MMI	**53RA1681**	★ **691**
			★ **4101**
			3818-74
		53RA1681A	★ **691**
			★ **4101**
			3818-64
53RA481			
	MMI	**53RA481**	★ **4101**
			3815-80
		53RA481A	★ **4101**
			3815-75
53RS1681			
	MMI	**53RS1681**	★ **691**
			★ **4101**
			3818-75
		53RS1681A	★ **691**
			★ **4101**
			3818-65
53RS881			
	MMI	**53RS881**	★ **4101**
			3817-63
		53RS881A	★ **4101**
			3817-60
53S080	**MMI**	**53S080**	★ **4101**
			3814-32
53S081	**MMI**	**53S081**	★ **4101**
			3814-36
53S140	**MMI**	**53S140**	★ **4101**
			3814-109
53S141	**MMI**	**53S141**	★ **4101**
			3814-110
		53S141A	★ **4101**
			3814-91
53S1641			
	MMI	**53S1641**	★ **4101**
			3820-24
		53S1641A	★ **4101**
			3820-12
53S1681			
	MMI	**53S1681**	★ **4101**
			3819-47
		53S1681A	★ **4101**
			3819-16
53S240	**MMI**	**53S240**	★ **4101**
			3815-47
53S241	**MMI**	**53S241**	★ **4101**
			3815-51
		53S241A	★ **4101**
			3815-34
53S280	**MMI**	**53S280**	★ **4101**
			3815-14
53S281	**MMI**	**53S281**	★ **4101**
			3815-15
		53S281A	★ **4101**
			3815-8
53S3281			
	MMI	**53S3281**	★ **691**
			★ **4101**
			3820-50
		53S3281A	★ **691**
			★ **4101**
			3820-44
53S440	**MMI**	**53S440**	★ **4101**
			3817-18
53S441	**MMI**	**53S441**	★ **4101**
			3817-21
		53S441A	★ **4101**
			3817-12
53S480	**MMI**	**53S480**	★ **4101**
			3816-17
53S481	**MMI**	**53S481**	★ **4101**
			3816-18
		53S481A	★ **4101**
			3815-107
53S485	MMI	53S485	3816-22
53S6481			
	MMI	53S6481	3821-64
		53S6481A	3821-39

Base Number	Source	Device	Page-Line
53S841	**MMI**	**53S841**	★ **4101**
			3818-33
		53S841A	★ **4101**
			3818-22
53S881	MMI	53S881	3817-111
		53S881A	3817-93
53SDA441			
	MMI	**53SDA441**	★ **4101**
53SDA442			
	MMI	**53SDA442**	★ **4101**
54	Amperex	BGY54A	3324-67
	Burr-Brown	**PCM54H**	★ **3147**
			2872-46
		PCM54J	★ **3147**
			2872-47
		PCM54K	★ **3147**
			2872-48
	National	54HC/74HC	¶ 354-10
			¶ 355-12
		54HCTXXX	¶ 358-12
		54LS/74LSXXX	
			¶ 354-4
		MM54/74HCXXX	
			¶ 353-2
			¶ 354-4
			¶ 354-19
		MM54C Series	¶ 352-14
		MM54HC/MM74HC	
			¶ 354-15
	NCR	ADP-54	2038-47
	TI	SN54/74'ALS620A	
			¶ 400-13
		SN54/74'ALS638-9A	
			¶ 400-13
		SN54/74'AS245	
			¶ 400-13
		SN54/74'AS620-'623	
			¶ 400-13
		SN54/74'AS638-9	
			¶ 400-13
		SN54/74'AS640-645A	
			¶ 400-13
		SN54/74ALS245	
			¶ 400-13
		SN54/74LS222-228	
			¶ 435-6
	Zytrex	ZX54HCT/LS00	825-82
		ZX54HCT/LS02	827-153
		ZX54HCT/LS04	811-54
		ZX54HCT/LS08	824-81
		ZX54HCT/LS107	823-155
		ZX54HCT/LS112	823-98
		ZX54HCT/LS113	823-68
		ZX54HCT/LS138	818-72
		ZX54HCT/LS139	817-156
		ZX54HCT/LS157	832-94
		ZX54HCT/LS158	832-128
		ZX54HCT/LS160	815-7
		ZX54HCT/LS161	812-17
		ZX54HCT/LS162	814-141
		ZX54HCT/LS163	811-154
		ZX54HCT/LS164	836-63
		ZX54HCT/LS165	836-19
		ZX54HCT/LS210	839-129
		ZX54HCT/LS238	818-73
		ZX54HCT/LS239	817-157
		ZX54HCT/LS240	839-130
		ZX54HCT/LS241	840-33
		ZX54HCT/LS244	840-34
		ZX54HCT/LS245	841-181
		ZX54HCT/LS257	832-159
		ZX54HCT/LS258	832-184
		ZX54HCT/LS259	831-9
		ZX54HCT/LS273	821-92
		ZX54HCT/LS32	826-154
		ZX54HCT/LS365	809-163
		ZX54HCT/LS366	810-33
		ZX54HCT/LS367	809-164
		ZX54HCT/LS368	810-34
		ZX54HCT/LS373	830-14
		ZX54HCT/LS374	822-147
		ZX54HCT/LS533	830-125
		ZX54HCT/LS534	822-25
		ZX54HCT/LS540	810-129
		ZX54HCT/LS541	810-130
		ZX54HCT/LS563	830-126

(Continued)

¶ Indicates page number in Application Note Directory.
★ Indicates additional data is provided on the page noted.

Base Number	Source	Device	Page-Line
54	Zytrex	ZX54HCT/LS564	822-26
		ZX54HCT/LS573	830-15
		ZX54HCT/LS574	822-148
		ZX54HCT/LS640	841-98
		ZX54HCT/LS643	842-15
		ZX54HCT/LS73	823-156
		ZX54HCT/LS74	820-49
		ZX54HCT/LS76	823-33
540	Calmos	CA540	4441-7
	Sharp	SM540	1450-77
			1413-7
	SiliconSys	**SSI540**	★**3736**
			1469-31
	Telefunken	TBA540	3325-28
	TI	**TLC540M**	★ **720**
			2834-33
5400	CalDevices	HCS5400	4440-22
	Fairchild	**5400**	★ **609**
			★ **616**
			★ **622**
			★ **623**
			870-183
	National	DM5400	870-186
	Plessey	CLA5400	4453-42
	Siemens	TDA5400	3327-59
	Signetics	5400	870-189
	Siliconix	**SD5400**	★**3226**
			★**3242**
	TI	**SN5400**	★ **712**
			870-191
5401	Fairchild	5401	871-133
	National	DM5401	871-139
	Siemens	TDA5401	3327-60
	Siliconix	**SD5401**	★**3226**
			★**3242**
	TI	**SN5401**	★ **712**
			871-146
5402	**CTI**	**MA5402**	★**3530**
			3378-53
	Fairchild	**5402**	★ **609**
			★ **616**
			★ **622**
			★ **623**
			865-89
	National	DM5402	865-92
		MM5402	3320-54
	Signetics	5402	865-94
	Siliconix	**SD5402**	★**3226**
			★**3242**
	TI	**SN5402**	★ **712**
			865-98
5403	**CTI**	**MA5403**	★**3530**
			3378-54
	Fairchild	5403	871-134
	National	DM5403	871-140
	Signetics	5403	871-143
	TI	**SN5403**	★ **712**
			871-147
5404	**Fairchild**	**5404**	★ **609**
			★ **616**
			★ **622**
			★ **623**
			857-75
	National	DM5404	857-78
	Signetics	5404	857-80
	TI	**SN5404**	★ **712**
			857-85
5405	Fairchild	5405	857-137
	National	DM5405	857-140
		MM5405	3320-55
	Signetics	5405	857-142
	TI	**SN5405**	★ **712**
			857-145
5406	Fairchild	5406	864-106
	National	DM5406	864-109
	Signetics	5406	864-111
	TI	**SN5406**	★ **712**
			864-113
5407	Fairchild	5407	864-86
	National	DM5407	864-89
	Signetics	5407	864-91
	TI	**SN5407**	★ **712**
			864-93
5408	**Fairchild**	**5408**	★ **609**
			★ **616**
			★ **622**
			(Continued)
5408	**Fairchild**	**5408**	★ **623**
			869-71
	National	DM5408	869-74
	Signetics	5408	869-76
	TI	**SN5408**	★ **712**
			869-78
5409	**Fairchild**	**5409**	★ **609**
			★ **616**
			★ **622**
			★ **623**
			869-132
	National	DM5409	869-135
	TI	**SN5409**	★ **712**
			869-137
541	**Intersil**	**AD541**	★**3200**
	MicroNet	**MN541**	★**3202**
			3350-56
	Plessey	SL541	3308-5
	Sanyo	STK541	3387-15
	SiliconSys	**SSI541**	★**3736**
	TI	**TLC541M**	★ **720**
			2834-34
5410	**Fairchild**	**5410**	★ **609**
			★ **616**
			★ **622**
			★ **623**
			870-107
	Motorola	MC5410	870-109
	National	DM5410	870-112
	Signetics	5410	870-114
		NE5410	★**3690**
			★**3722**
			2858-8
		SE5410	★**3690**
			★**3722**
			2858-9
	TI	**SN5410**	★ **712**
			870-116
54100	**TI**	**SN54100**	★ **712**
			875-5
54104	Fairchild	54104	867-90
	National	MM54104	3323-125
54105	Fairchild	54105	867-91
54107	Fairchild	54107	867-151
	National	DM54107	867-157
	Signetics	54107	867-161
	TI	**SN54107**	★ **712**
			867-165
54109	National	DM54109	867-104
	Signetics	54109	867-106
	TI	**SN54109**	★ **712**
			867-108
5411	Fairchild	5411	868-176
	National	DM5411	868-179
	SSS	SCL5411	834-122
54111	**TI**	**SN54111**	★ **712**
			868-20
54116	Signetics	54116	875-28
	TI	**SN54116**	★ **712**
			875-30
5412	Fairchild	5412	870-164
	TI	**SN5412**	★ **712**
			870-166
54120	**TI**	**SN54120**	★ **712**
			887-90
54121	**Fairchild**	**54121**	★ **609**
			★ **616**
			★ **622**
			★ **623**
			880-93
	National	DM54121	880-96
	Signetics	54121	880-98
	TI	**SN54121**	★ **712**
			880-100
54122	**Fairchild**	**54122**	★ **609**
			★ **616**
			★ **622**
			★ **623**
			880-111
	TI	**SN54122**	★ **712**
			880-114
54123	**Fairchild**	**54123**	★ **609**
			★ **616**
			★ **622**
			★ **623**
			880-141
			(Continued)
54123	National	DM54123	880-144
	Signetics	54123	880-146
	TI	**SN54123**	★ **712**
			880-148
54125	**Fairchild**	**54125**	★ **616**
			856-89
	National	DM54125	856-91
	Signetics	54125	856-95
	TI	**SN54125**	★ **712**
			856-97
541256	MicronTech	MT541256	3829-67
54126	Fairchild	54126	856-116
	Signetics	54126	856-120
	TI	**SN54126**	★ **712**
			856-122
54128	Signetics	54128	2884-5
	TI	**SN54128**	★ **712**
5413	Fairchild	5413	887-98
	National	DM5413	887-101
	Signetics	5413	887-103
	TI	**SN5413**	★ **712**
			887-105
54132	Fairchild	54132	887-144
	National	DM54132	887-147
	Signetics	54132	887-149
	TI	**SN54132**	★ **712**
			887-151
54136	**TI**	**SN54136**	★ **712**
			874-65
5414	**Fairchild**	**5414**	★ **616**
			888-22
	National	DM5414	888-25
	Signetics	5414	888-27
	TI	**SN5414**	★ **712**
			888-29
54141	Fairchild	54141	2876-27
	Motorola	MC54141	2876-29
	National	DM54141	2876-31
54144	**TI**	**SN54144**	★ **712**
			862-46
54145	Fairchild	54145	862-97
	National	DM54145	862-100
	Signetics	54145	862-102
54147	Signetics	54147	889-45
	TI	**SN54147**	★ **712**
			889-47
54148	National	DM54148	888-143
	Signetics	54148	888-147
	TI	**SN54148**	★ **712**
			888-149
5415	SSS	SCL5415	834-141
54150	**Fairchild**	**54150**	★ **616**
			880-75
	National	DM54150	880-78
	Signetics	54150	880-80
	TI	**SN54150**	★ **712**
			880-82
54151	**Fairchild**	**54151**	★ **609**
			★ **616**
			★ **622**
			★ **623**
			879-153
	National	DM54151A	879-156
	Signetics	54151	879-158
	TI	**SN54151A**	★ **712**
			879-160
54152	Fairchild	54152	880-18
54153	**Fairchild**	**54153**	★ **609**
			★ **616**
			★ **622**
			★ **623**
			877-116
	National	DM54153	877-121
	Signetics	54153	877-123
	TI	**SN54153**	★ **712**
			877-125
54154	**Fairchild**	**54154**	★ **616**
			863-166
	National	DM54154	863-172
	Signetics	54154	863-176
	TI	**SN54154**	★ **712**
54155	Fairchild	54155	863-69
	National	DM54155	863-72
	Signetics	54155	863-74
	TI	**SN54155**	★ **712**
			863-76
54156	Fairchild	54156	863-38
	National	DM54156	863-41
	Signetics	54156	863-43
	TI	**SN54156**	★ **712**
			863-45
54157	**Fairchild**	**54157**	★ **609**
			★ **616**
			878-157
	National	DM54157	878-164
	Signetics	54157	878-170
	TI	**SN54157**	★ **712**
			878-174
54158	Signetics	54158	878-78
5416	Fairchild	5416	864-95
	National	DM5416	864-98
	Signetics	5416	864-102
	TI	**SN5416**	★ **712**
			864-104
54160	Fairchild	54160	860-133
	National	DM54160A	860-140
	Signetics	54160	860-144
	TI	**SN54160**	★ **712**
			860-147
54161	**Fairchild**	**54161**	★ **616**
			858-119
	National	DM54161A	858-126
	Signetics	54161	858-130
	TI	**SN54161**	★ **712**
			858-133
54162	Fairchild	54162	860-179
	National	DM54162A	860-182
	TI	**SN54162**	★ **712**
			860-184
54163	Fairchild	54163	858-172
	National	DM54163	858-175
	Signetics	54163	858-177
	TI	**SN54163**	★ **712**
			858-179
54164	**Fairchild**	**54164**	★ **616**
			881-166
			3856-39
	National	DM54164	881-168
			3856-48
	Signetics	54164	881-172
			3856-56
	TI	**SN54164**	★ **712**
54165	**Fairchild**	**54165**	★ **617**
			882-43
			3855-110
	National	DM54165	882-46
			3855-113
	Signetics	54165	882-48
			3855-115
	TI	**SN54165**	★ **712**
54166	Fairchild	54166	882-61
			3855-118
	National	DM54166	882-63
			3856-6
	Signetics	54166	882-65
			3856-9
	TI	**SN54166**	★ **712**
54167	Fairchild	54167	887-67
	TI	**SN54167**	★ **712**
			887-70
5417	Fairchild	5417	864-77
	National	DM5417	864-80
	Signetics	5417	864-82
	TI	**SN5417**	★ **712**
			864-84
54170	**Fairchild**	**54170**	★ **617**
			876-153
			3830-78
		ZN54170	3830-82
	National	DM54170	3830-84
	Signetics	54170	877-1
	TI	**SN54170**	★ **712**
54173	**Fairchild**	**54173**	★ **617**
			866-1
	National	DM54173	866-3
	Signetics	54173	866-7
	TI	**SN54173**	★ **712**
			866-11
54174	**Fairchild**	**54174**	★ **609**
			★ **617**
			★ **622**
			★ **623**
			(Continued)

Arranged alphanumerically from left to right.

Base Number	Source	Device	Page-Line
54174	Fairchild	54174	866-24
	National	DM54174	866-28
	Signetics	54174	866-30
	TI	SN54174	★ 712
			866-32
54175	Fairchild	54175	★ 609
			★ 617
			★ 622
			★ 623
			864-260
	National	DM54175	864-263
	Signetics	54175	864-265
	TI	SN54175	★ 712
			864-267
54176	Fairchild	54176	860-100
	National	DM54176	860-107
	TI	SN54176	★ 712
			860-116
54177	Fairchild	54177	858-73
	National	DM54177	858-81
	TI	SN54177	★ 712
			858-94
54178	Fairchild	54178	881-86
			3854-46
	TI	SN54178	★ 712
54179	Fairchild	54179	881-92
			3854-47
	TI	SN54179	★ 712
54180	Fairchild	54180	889-1
	National	DM54180	889-4
	Signetics	54180	889-8
	TI	SN54180	★ 712
			889-12
54181	Fairchild	54181	855-18
	National	DM54181	855-22
	Signetics	54181	855-23
	TI	SN54181	★ 712
			855-25
54182	Fairchild	54182	855-83
	TI	SN54182	★ 712
			855-87
54184	National	DM54184	887-84
	TI	SN54184	★ 712
			887-86
			3808-29
54185	National	DM54185A	887-79
	TI	SN54185A	★ 712
			887-82
			3808-26
5419	SSS	SCL5419	834-135
54190	Fairchild	54190	861-150
	National	DM54190	861-153
	Signetics	54190	861-154
	TI	SN54190	★ 712
			861-156
54191	Fairchild	54191	★ 617
			859-157
	National	DM54191	859-160
	Signetics	54191	859-162
	TI	SN54191	★ 712
			859-164
54192	Fairchild	54192	861-115
	National	DM54192	861-118
	Signetics	54192	861-122
	TI	SN54192	★ 712
			861-124
54193	Fairchild	54193	860-15
	National	DM54193	860-18
	Signetics	54193	860-22
	TI	SN54193	★ 712
			860-24
54194	Fairchild	54194	881-119
			3854-48
	National	DM54194	881-122
			3854-57
	Signetics	54194	881-124
			3854-61
54195	Fairchild	54195	881-23
			3854-72
	National	DM54195	881-30
			3854-98
	Signetics	54195	881-34
	TI	SN54195	★ 712
54196	Fairchild	54196	860-101
	TI	SN54196	★ 712
			860-117

Base Number	Source	Device	Page-Line
54197	Fairchild	54197	858-74
	National	DM54197	858-82
	TI	SN54197	★ 712
			858-95
54198	Fairchild	54198	882-25
			3855-76
	National	DM54198	882-27
			3855-80
	TI	SN54198	★ 712
54199	Fairchild	54199	882-31
			3855-77
	National	DM54199	3855-81
	Signetics	54199	882-33
	TI	SN54199	★ 712
542	AD	AD542	¶ 406-14
		AD542J	★ 3507
			3345-31
		AD542K	★ 3507
			3344-13
		AD542L	★ 3507
			3342-8
		AD542S	★ 3507
			3344-12
	CTI	MA542	3378-66
	Datel	AM-542MC	★ 3160
			★ 3163
			3306-111
			3337-50
		AM-542MR	★ 3160
			★ 3163
			3306-112
			3337-44
	HybridSys	ADC542B-8	2834-4
		ADC542C-8	2834-5
	MicroNet	MN542	3343-42
	Sanyo	STK542	3388-115
	Signetics	NE542	★ 3727
			3319-60
	VTC	VM542	★ 3270
			1469-32
5420	Fairchild	5420	★ 609
			★ 616
			★ 622
			★ 623
			869-167
	Goldstar	LL5420	4446-1
	LSILogic	LL5420	★ 4676
			4450-19
	MicroNet	MN5420	★ 3203
			2847-33
	National	DM5420	869-170
	Signetics	5420	869-172
	TI	SN5420	★ 712
			869-174
54200	RCA	PA54200	★ 4742
			4454-23
5421	Fairchild	5421	868-139
	Signetics	5421	868-141
5422	Fairchild	5422	870-79
	TI	SN5422	★ 712
			870-81
54221	Signetics	54221	880-126
	TI	SN54221	★ 712
			880-128
5423	Fairchild	5423	865-12
	TI	SN5423	★ 712
			865-15
54240	National	MM54240	2900-13
54246	TI	SN54246	★ 712
			2875-138
54247	TI	SN54247	★ 712
			2875-123
5425	Fairchild	5425	★ 616
			865-3
	National	DM5425	865-6
	Signetics	5425	865-8
	TI	SN5425	★ 712
			865-10
54251	TI	SN54251	★ 712
			880-37
54259	National	DM54259	875-127
	TI	SN54259	★ 712
			875-133
5426	Fairchild	5426	864-33
	National	DM5426	864-36
	Signetics	5426	864-42
			(Continued)

Base Number	Source	Device	Page-Line
5426	TI	SN5426	★ 712
			864-44
54265	TI	SN54265	★ 712
			887-140
5427	Fairchild	5427	865-34
	National	DM5427	865-37
	Signetics	5427	865-39
	TI	SN5427	865-41
54278	TI	SN54278	★ 712
			888-99
54279	Fairchild	54279	★ 617
			875-73
	Signetics	54279	875-75
	TI	SN54279	★ 712
			875-77
5428	Signetics	5428	865-95
	TI	SN5428	★ 712
			865-99
54283	Fairchild	54283	856-19
	TI	SN54283	★ 712
			856-28
54284	National	DM54284	855-131
	TI	SN54284	★ 712
			855-132
54285	TI	SN54285	★ 712
			855-133
54290	TI	SN54290	★ 712
			860-67
54293	Fairchild	54293	859-44
	TI	SN54293	★ 712
			859-56
54298	Fairchild	54298	★ 617
			879-75
	Signetics	54298	879-78
	TI	SN54298	★ 712
			879-80
543	Datel	AM-543MC	★ 3160
			★ 3163
			3306-113
			3337-35
		AM-543MR	★ 3160
			★ 3163
			3306-114
			3337-33
5430	Fairchild	5430	★ 609
			★ 616
			★ 622
			★ 623
			872-1
	National	DM5430	872-4
		MM5430	3321-87
	Signetics	5430	872-6
	TI	SN5430	★ 712
			872-8
5432	Fairchild	5432	★ 616
			873-22
	National	DM5432	873-24
	Signetics	5432	873-26
	TI	SN5432	★ 712
			873-28
5433	Signetics	5433	865-68
	TI	SN5433	★ 712
			865-70
54365	National	DM54365	856-154
	Signetics	54365A	856-162
	TI	SN54365A	★ 712
			856-166
54366	National	DM54366	857-183
			864-128
	Signetics	54366A	857-191
			864-132
	TI	SN54366A	★ 712
			858-4
			864-134
54367	National	DM54367	856-155
			864-129
	Signetics	54367A	856-163
			864-133
	TI	SN54367A	★ 712
			856-167
			864-135
54368	National	DM54368	857-184
	Signetics	54368A	858-1
	TI	SN54368A	★ 712
			858-5

Base Number	Source	Device	Page-Line
5437	Fairchild	5437	★ 609
			★ 616
			★ 622
			★ 623
			871-47
	National	DM5437	871-50
		MM5437	3316-133
	Signetics	5437	871-52
	TI	SN5437	★ 712
			871-54
54376	TI	SN54376	★ 712
			868-136
5438	Fairchild	5438	871-82
	National	DM5438	871-86
	Signetics	5438	871-88
	TI	SN5438	★ 712
			871-92
5439	Signetics	5439	871-89
54390	TI	SN54390	★ 712
			861-29
54393	TI	SN54393	★ 712
			859-25
544	AD	AD544	¶ 406-14
		AD544J	★ 3507
			3345-33
		AD544K	★ 3507
			3344-8
		AD544L	★ 3507
			3342-5
		AD544S	★ 3507
			3344-11
	Intel	iSBC544	2011-16
			2031-41
	Signetics	NE544	★ 3712
			★ 3730
			3328-9
5440	Fairchild	5440	★ 609
			★ 616
			★ 622
			★ 623
			870-35
	National	DM5440	870-38
	Signetics	5440	870-40
	TI	SN5440	★ 712
			870-42
5441	National	DM5441A	2876-23
5442	Fairchild	5442	★ 609
			★ 616
			★ 622
			★ 623
			862-113
	National	DM5442	862-122
	Signetics	5442	862-128
	TI	SN5442A	★ 712
			862-130
5443	Fairchild	5443	862-66
5444	Fairchild	5444	862-63
5445	Fairchild	5445	862-88
	National	DM5445	862-91
	Signetics	5445	862-93
	TI	SN5445	★ 712
			862-95
5446	Fairchild	5446	2875-131
	National	DM5446A	2875-136
			¶ 398-1
	TI	SN5446A	★ 712
			2875-139
54468	Motorola	MC54468	886-127
5447	Fairchild	5447	2875-100
	National	DM5447A	2875-115
			¶ 398-1
	TI	SN5447A	★ 712
			2875-124
5448	Fairchild	5448	2875-59
	National	DM5448	2875-76
		DM5448A	¶ 398-1
	TI	SN5448	★ 712
			2875-84
5449	Fairchild	5449	2875-38
545	AD	AD545J	★ 3507
			3343-48
		AD545K	★ 3507
			3332-34
			3343-47
		AD545L	★ 3507
			3332-35
			(Continued)

¶ Indicates page number in Application Note Directory.

★ Indicates additional data is provided on the page noted.

Base Number	Source	Device	Page-Line
545	AD	AD545L	3350-57
		AD545M	★ **3507**
			3332-36
			3340-50
	Harris	HD545	¶ 395-16
			¶ 396-6
	SiliconSys	**SSI545**	★ **3736**
			1469-37
5450	Fairchild	5450	872-115
	National	DM5450	872-118
		MM5450	2876-47
	SGS	M5450	2874-114
	Signetics	5450	872-120
	TI	**SN5450**	★ **712**
			872-122
54508	TI	SN54508	¶ 438-11
5451	**Fairchild**	**5451**	★ **616**
			872-75
	National	DM5451	872-78
		MM5451	2876-48
	SGS	LS5451	872-99
		M5451	2874-115
	Signetics	5451	872-80
	TI	**SN5451**	★ **712**
			872-82
54512	Mitsubishi	M54512	3309-49
54513	Mitsubishi	M54513	3309-43
54514	Mitsubishi	M54514	3309-57
54515	Mitsubishi	M54515	3309-58
54516	Motorola	M54516	3310-70
5452	National	MM5452	2877-107
54521	Motorola	M54521	3310-71
54522	Mitsubishi	M54522	3309-41
54527	Motorola	M54527	3310-77
54529	Mitsubishi	M54529	3309-48
5453	Fairchild	5453	872-162
	National	DM5453	872-165
		MM5453	2877-108
	TI	**SN5453**	★ **712**
			872-167
54533	Mitsubishi	M54533	3309-64
54534	Mitsubishi	M54534	3309-65
54535	Motorola	M54535	3310-169
54536	Mitsubishi	M54536	3309-59
54537	Mitsubishi	M54537	3309-60
54538	Mitsubishi	M54538	3309-61
54539	Mitsubishi	M54539	3309-66
5454	Fairchild	5454	872-155
	LSILogic	**LL5454**	★ **4676**
	National	DM5454	872-158
	TI	**SN5454**	★ **712**
			872-160
54540	Mitsubishi	M54540	2895-90
54541	Mitsubishi	M54541	2895-91
54542	Mitsubishi	M54542	2895-92
54543	Mitsubishi	M54543	2895-93
54544	Mitsubishi	M54544	2895-94
54545	Mitsubishi	M54545	2895-95
54546	Mitsubishi	M54546	2895-96
54547	Mitsubishi	M54547	2895-97
54548	Mitsubishi	M54548	2895-98
54549	Mitsubishi	M54549	2895-102
5455	National	MM5455	3320-71
		N5455	¶ 378-3
	SSS	SCL5455	3320-102
5456	National	MM5456	3320-72
54560	Mitsubishi	M54560	3309-53
54561	Mitsubishi	M54561	3309-54
54564	Mitsubishi	M54564	3310-173
54565	Mitsubishi	M54565	3309-42
54566	Mitsubishi	M54566	3309-55
54567	Mitsubishi	M54567	3309-165
54568	Mitsubishi	M54568	3309-50
54569	Mitsubishi	M54569	3309-46
5457	National	MM5457	3320-73
54571	Mitsubishi	M54571	3309-67
54576	Mitsubishi	M54576	3309-62
54577	Mitsubishi	M54577	3309-63
54578	Mitsubishi	M54578	3309-68
5458	SSS	SCL5458	3320-83
54580	Mitsubishi	M54580	3309-56
546	Harris	HD546	¶ 395-16
			¶ 396-6
		HI546	★ **3180**
5460	Fairchild	5460	872-129
	Signetics	5460	872-132
5462	National	MM5462	3320-74
5463	National	MM5463	3320-75
	SSS	SCL5463	3320-103
5466	National	MM5466	3320-76
	SSS	SCL5466	3320-84
5467	SSS	SCL5467	3320-85
5468	SSS	SCL5468	3320-104
547	**AD**	**AD547J**	★ **3502**
			★ **3507**
			3344-16
		AD547K	★ **3502**
			★ **3507**
			3342-3
		AD547L	★ **3502**
			★ **3507**
			3341-50
			3340-58
		AD547S	★ **3502**
			★ **3507**
			3342-4
	Harris	**HI547**	★ **3180**
	LTI	LC547	3307-35
			3316-75
		LD547	3307-39
			3316-83
		LU547	3307-42
			3316-91
5470	Fairchild	5470	867-72
	National	DM5470	867-75
	TI	**SN5470**	★ **712**
			867-78
54700	Mitsubishi	M54700A	3814-101
		M54700A-1	3814-77
		M54700A-2	3814-84
54701	Mitsubishi	M54701A	3814-102
		M54701A-1	3814-78
		M54701A-2	3814-85
54704	Mitsubishi	M54704A-1	3816-82
5472	Fairchild	5472	867-81
	National	DM5472	867-84
	TI	**SN5472**	★ **712**
			867-86
5473	**Fairchild**	**5473**	★ **616**
			867-152
	National	DM5473	867-158
	Signetics	5473	867-162
	TI	**SN5473**	★ **712**
			867-166
54730	Mitsubishi	M54730A	3814-46
		M54730A-1	3814-25
		M54730A-2	3814-29
54731	Mitsubishi	M54731A	3814-47
		M54731A-1	3814-26
		M54731A-2	3814-30
5474	**Fairchild**	**5474**	★ **609**
			★ **616**
			★ **622**
			★ **623**
			864-207
	National	DM5474	864-210
	Signetics	5474	864-212
	SSS	SCL5474	3320-105
	TI	**SN5474**	★ **712**
			864-214
54740	Mitsubishi	M54740A	3817-8
		M54740A-2	3816-86
54741	Mitsubishi	M54741A	3817-9
		M54741A-1	3816-83
		M54741A-2	3816-87
5475	**Fairchild**	**5475**	★ **616**
			875-32
	National	DM5475	875-35
	Signetics	5475	875-37
	TI	**SN5475**	★ **712**
			875-39
5476	**Fairchild**	**5476**	★ **616**
			868-22
	National	DM5476	868-25
	Signetics	5476	868-27
	TI	**SN5476**	★ **712**
			868-29
5477	Fairchild	5477	875-61
548	**Harris**	**HI548**	★ **3181**
	LTI	LC548	3307-36
			3316-76
		LD548	3307-40
			(Continued)
548	LTI	LD548	3316-84
	TI	TLC548C	2837-22
		TLC548M	2837-23
5480	Fairchild	5480	854-160
	SGS	M5480	2876-44
5481	SGS	M5481	2876-40
5482	Fairchild	5482	855-8
	SGS	M5482	2876-41
	TI	**SN5482**	★ **712**
			855-11
5483	**Fairchild**	**5483**	★ **609**
			★ **616**
			★ **622**
			★ **623**
			856-20
	National	DM5483	856-24
			¶ 352-9
		MM5483	2877-112
	Signetics	5483	856-26
	TI	**SN5483A**	★ **712**
			856-29
5484	National	MM5484	2877-90
5485	**Fairchild**	**5485**	★ **616**
			854-43
	National	DM5485	854-56
		MM5485	2877-80
	Signetics	5485	854-63
	TI	**SN5485**	★ **712**
			854-68
5486	**Fairchild**	**5486**	★ **609**
			★ **616**
			★ **622**
			★ **623**
			874-88
	National	DM5486	874-93
		MM5486	2874-112
	SGS	M5486	2874-113
	Signetics	5486	874-98
	TI	**SN5486**	★ **712**
			874-100
5489	AMD	AM5489	3831-95
		SN5489-1	3831-65
549	**Harris**	**HI549**	★ **3181**
	LTI	LC549	3307-37
			3316-77
		LD549	3307-41
			3316-85
		LV549	3307-43
			3316-93
	TI	TLC549C	2837-24
		TLC549M	2834-44
5490	**Fairchild**	**5490**	★ **616**
			860-58
	National	DM5490	860-63
	Signetics	5490	860-65
	TI	**SN5490A**	★ **712**
			860-68
5491	Fairchild	5491	882-100
			3856-67
	Motorola	MC5491A	3856-69
	National	SN5491A	3856-71
	Signetics	5491	882-103
			3856-73
	TI	**SN5491**	★ **712**
5492	Fairchild	5492	862-6
	National	DM5492A	862-9
	Signetics	5492	862-11
	TI	**SN5492A**	★ **712**
			862-13
5493	Fairchild	5493	859-45
	National	DM5493A	859-52
	Signetics	5493	859-54
	TI	**SN5493A**	★ **712**
			859-57
5494	Fairchild	5494	881-114
			3855-24
	Signetics	5494	3855-27
	TI	**SN5494**	★ **712**
5495	**Fairchild**	**5495**	★ **616**
			881-62
			3854-49
	National	DM5495	881-67
			3854-58
	Signetics	5495A	881-69
			3854-62
	TI	**SN5495**	★ **712**
5496	Fairchild	5496	881-151
			3855-43
	National	DM5496	881-154
			3855-46
	Signetics	5496	881-156
			3855-48
	TI	**SN5496**	★ **712**
5497	**Fairchild**	**5497**	★ **616**
			888-109
	TI	**SN5497**	★ **712**
			888-112
54AC00	**Fairchild**	**54AC00**	★ **1011**
			★ **1013**
			825-44
54AC02	**Fairchild**	**54AC02**	★ **1011**
			★ **1013**
			827-113
54AC04	**Fairchild**	**54AC04**	★ **1011**
			★ **1013**
			810-176
54AC08	**Fairchild**	**54AC08**	★ **1011**
			824-47
54AC10	**Fairchild**	**54AC10**	★ **1011**
			★ **1013**
			824-172
54AC1010	**Fairchild**	**54AC1010**	★ **1012**
			★ **1016**
			807-81
54AC1016	**Fairchild**	**54AC1016**	★ **1012**
			★ **1016**
			807-127
54AC1017	**Fairchild**	**54AC1017**	★ **1012**
			★ **1016**
			807-131
54AC109	**Fairchild**	**54AC109**	★ **1011**
			★ **1013**
			822-171
54AC11	**Fairchild**	**54AC11**	★ **1011**
			★ **1013**
			823-193
54AC138	**Fairchild**	**54AC138**	★ **1011**
			★ **1015**
			817-178
54AC139	**Fairchild**	**54AC139**	★ **1011**
			★ **1015**
			817-90
54AC14	**Fairchild**	**54AC14**	★ **1011**
			★ **1013**
			839-10
54AC151	**Fairchild**	**54AC151**	★ **1011**
			★ **1015**
			833-24
54AC153	**Fairchild**	**54AC153**	★ **1011**
			★ **1015**
			831-137
54AC157	**Fairchild**	**54AC157**	★ **1011**
			★ **1015**
			832-56
54AC158	**Fairchild**	**54AC158**	★ **1011**
			★ **1015**
			832-98
54AC160	**Fairchild**	**54AC160**	★ **1011**
			★ **1014**
			814-161
54AC161	**Fairchild**	**54AC161**	★ **1011**
			★ **1014**
			811-172
54AC163	**Fairchild**	**54AC163**	★ **1011**
			★ **1014**
			811-116
54AC169	**Fairchild**	**54AC169**	★ **1011**
			★ **1014**

Arranged alphanumerically from left to right.

PART NUMBER INDEX

Base Number	Source	Device	Page-Line
54AC174	Fairchild	54AC174	★1011 ★1013 820-176
54AC175	Fairchild	54AC175	★1011 ★1013 820-84
54AC191	Fairchild	54AC191	★1011 ★1014 812-36
54AC20	Fairchild	54AC20	★1011 ★1013 824-114
54AC240	Fairchild	54AC240	★1011 ★1014 839-56
54AC241	Fairchild	54AC241	★1011 ★1014 839-139
54AC244	Fairchild	54AC244	★1011 ★1014 840-60
54AC245	Fairchild	54AC245	★1011 ★1015 841-100
54AC251	Fairchild	54AC251	★1011 ★1015 833-102
54AC253	Fairchild	54AC253	★1011 ★1015 832-33
54AC257	Fairchild	54AC257	★1011 ★1015 832-132
54AC258	Fairchild	54AC258	★1011 ★1015 832-165
54AC273	Fairchild	54AC273	★1011 ★1013 821-50
54AC299	Fairchild	54AC299	★1011 ★1014 836-141
54AC32	Fairchild	54AC32	★1011 ★1013 826-123
54AC323	Fairchild	54AC323	★1011 ★1014
54AC373	Fairchild	54AC373	★1012 ★1013 829-99
54AC374	Fairchild	54AC374	★1012 ★1013 822-34
54AC377	Fairchild	54AC377	★1012 ★1013
54AC378	Fairchild	54AC378	★1013
54AC379	Fairchild	54AC379	★1012 ★1013
54AC520	Fairchild	54AC520	★1012 806-147
54AC521	Fairchild	54AC521	★1012 806-124
54AC540	Fairchild	54AC540	★1012 ★1014 810-44
54AC541	Fairchild	54AC541	★1012 ★1014 810-45
54AC563	Fairchild	54AC563	★1012 ★1013 830-27
54AC564	Fairchild	54AC564	★1012 ★1013 821-125
54AC569	Fairchild	54AC569	★1012 ★1014
54AC573	Fairchild	54AC573	★1012 ★1013 829-100
54AC574	Fairchild	54AC574	★1012 ★1013 822-35
54AC646	Fairchild	54AC646	★1012 ★1015 840-146
54AC648	Fairchild	54AC648	★1012 ★1015 840-99
54AC708	Fairchild	54AC708	★1012 ★1016
54AC74	Fairchild	54AC74	★1011 ★1013 820-12
54AC86	Fairchild	54AC86	★1011 ★1013 828-19
54ACT1010	Fairchild	54ACT1010	★1012 ★1016 807-83
54ACT1016	Fairchild	54ACT1016	★1016 807-129
54ACT1017	Fairchild	54ACT1017	★1012 ★1016 807-133
54ACT138	Fairchild	54ACT138	★1012 ★1015 817-180
54ACT240	Fairchild	54ACT240	★1012 ★1014 839-58
	VTC	V54ACT240	★1367 ★1370 839-60
54ACT241	Fairchild	54ACT241	★1012 ★1014 839-141
	VTC	V54ACT241	★1367 ★1370 840-47
54ACT244	Fairchild	54ACT244	★1012 ★1014 840-62
	VTC	V54ACT244	★1367 ★1370 840-64
54ACT245	Fairchild	54ACT245	★1012 ★1015 841-102
	VTC	V54ACT245	★1368 ★1370 ★1371 841-104
54ACT373	Fairchild	54ACT373	★1012 ★1013 (Continued)
54ACT373	Fairchild	54ACT373	829-103
	VTC	V54ACT373	★1367 ★1372 829-107
54ACT374	Fairchild	54ACT374	★1012 ★1013 822-38
	VTC	V54ACT374	★1367 ★1372 822-42
54ACT465	VTC	V54ACT465	★1367 ★1370 810-48
54ACT466	VTC	V54ACT466	★1367 ★1370 811-99 811-100 811-101 811-102
54ACT467	VTC	V54ACT467	★1367 ★1370 810-49
54ACT468	VTC	V54ACT468	★1367 ★1370 811-103 811-104 811-108 811-109
54ACT533	VTC	V54ACT533	★1367 ★1372 830-31
54ACT534	VTC	V54ACT534	★1367 ★1372 821-129
54ACT540	VTC	V54ACT540	★1367 ★1370 839-61
54ACT541	VTC	V54ACT541	★1367 ★1370 810-50
54ACT547	MMI	54ACT547	829-91
54ACT563	Fairchild	54ACT563	★1012 ★1013 830-29
	VTC	V54ACT563	★1367 ★1372 830-32
54ACT564	Fairchild	54ACT564	★1012 ★1013 821-127
	VTC	V54ACT564	★1373 821-130
54ACT567	MMI	54ACT567	829-92
54ACT573	Fairchild	54ACT573	★1012 ★1013 829-104
	VTC	V54ACT573	★1367 ★1372 829-108
54ACT574	Fairchild	54ACT574	★1012 ★1013 822-39
	VTC	V54ACT574	★1367 ★1373 822-43
54ACT575	VTC	V54ACT575	★1367 ★1373 822-160
54ACT576	VTC	V54ACT576	★1367 ★1373 821-131
54ACT577	VTC	V54ACT577	★1367 ★1373 822-32
54ACT580	VTC	V54ACT580	★1367 ★1372 830-33
54ACT620	VTC	V54ACT620	★1367 ★1371 841-26
54ACT623	VTC	V54ACT623	★1367 ★1371 841-27
54ACT640	VTC	V54ACT640	★1367 ★1371 841-63
54ACT643	VTC	V54ACT643	★1367 ★1371 841-64
54ACT645	VTC	V54ACT645	★1367 ★1371 841-105
54ACT646	MMI	54ACT646	★1112 840-148
54ACT648	MMI	54ACT648	★1112 840-101
54ACT651	MMI	54ACT651	★1113 840-102
54ACT652	MMI	54ACT652	★1113 840-149
54ACT708	Fairchild	54ACT708	★1012 ★1016
54ACT793	MMI	54ACT793	829-93
54ACT794	MMI	54ACT794	842-29
54ACT821	VTC	V54ACT821	★1367 ★1373 ★1374 842-100
54ACT822	VTC	V54ACT822	★1367 ★1373 ★1374 842-98
54ACT823	VTC	V54ACT823	★1367 ★1373 ★1374 ★1375 842-96
54ACT824	VTC	V54ACT824	★1367 ★1373 ★1375 822-162
54ACT825	VTC	V54ACT825	★1367 ★1373 822-44
54ACT826	VTC	V54ACT826	★1367 ★1373 821-132
54ACT827	VTC	V54ACT827	★1367 ★1370 ★1374 810-142

¶ Indicates page number in Application Note Directory.
★ Indicates additional data is provided on the page noted.

Base Number	Source	Device	Page-Line
54ACT828			
	VTC	**V54ACT828**	**★1367** **★1370** **★1374** 810-140
54ACT841			
	VTC	**V54ACT841**	**★1367** **★1372** **★1374** 831-35
54ACT842			
	VTC	**V54ACT842**	**★1367** **★1372** **★1374** 831-33
54ACT843			
	VTC	**V54ACT843**	**★1367** **★1372** **★1375** 831-43
54ACT844			
	VTC	**V54ACT844**	**★1367** **★1372** **★1375** 831-41
54ACT845			
	VTC	**V54ACT845**	**★1367** **★1372** **★1375** 831-39
54ACT846			
	VTC	**V54ACT846**	**★1367** **★1372** **★1375** 831-37
54ACT861			
	VTC	**V54ACT861**	**★1367** **★1371** **★1374** 842-114
54ACT862			
	VTC	**V54ACT862**	**★1367** **★1371** **★1374** 842-115
54ACT863			
	VTC	**V54ACT863**	**★1367** **★1371** **★1375** 842-118
54ACT864			
	VTC	**V54ACT864**	**★1367** **★1371** **★1375** 842-119
54ACT874			
	VTC	**V54ACT874**	**★1367** **★1373** 820-76
54ACT876			
	VTC	**V54ACT876**	**★1367** **★1373** 820-77
54ACT878			
	VTC	**V54ACT878**	**★1367** **★1373** 820-78
54ACT879			
	VTC	**V54ACT879**	**★1367** **★1373** 820-79
54ACT880			
	VTC	**V54ACT880**	**★1367** **★1372** 829-21
54AHCT138			
	IDT	IDT54AHCT138	818-1
54AHCT139			
	IDT	IDT54AHCT139	817-104
54AHCT182			
	IDT	IDT54AHCT182	806-81
54AHCT240			
	IDT	IDT54AHCT240	839-75
54AHCT244			
	IDT	IDT54AHCT244	839-151
54AHCT245			
	IDT	54AHCT245	841-122
		IDT54AHCT245	841-108
54AHCT273			
	IDT	IDT54AHCT273	821-60
54AHCT299			
	IDT	IDT54AHCT299	836-149
54AHCT373			
	IDT	IDT54AHCT373	829-123
54AHCT374			
	IDT	IDT54AHCT374	822-62
54AHCT377			
	IDT	IDT54AHCT377	821-107
54AHCT533			
	IDT	IDT54AHCT533	830-48
54AHCT534			
	IDT	IDT54AHCT534	821-148
54AHCT640			
	IDT	IDT54AHCT640	841-34
54AHCT645			
	IDT	IDT54AHCT645	841-123
54ALS00			
	National	DM54ALS00	870-194
	TI	**SN54ALS00 ★**	**712**
54ALS01			
	National	DM54ALS01	871-152
	TI	**SN54ALS01 ★**	**712** 871-158
54ALS02			
	National	DM54ALS02	865-104
	TI	**SN54ALS02 ★**	**712** 874-1
54ALS03			
	National	DM54ALS03	871-153
	TI	**SN54ALS03B ★**	**712** 871-159
54ALS04			
	National	DM54ALS04	857-87
	TI	**SN54ALS04A ★**	**712** 857-91
54ALS05			
	National	DM54ALS05	857-148
	TI	**SN54ALS05A ★**	**712** 857-152
54ALS08			
	National	DM54ALS08	869-81
	TI	**SN54ALS08 ★**	**712** 869-87
54ALS09			
	National	DM54ALS09	869-140
	TI	**SN54ALS09 ★**	**712** 869-142
54ALS10			
	National	DM54ALS10	870-119
	TI	**SN54ALS10A ★**	**712** 870-124
54ALS1000			
	National	DM54ALS1000	870-195
	TI	**SN54ALS1000 ★**	**713**
54ALS1002			
	National	DM54ALS1002	865-105
	TI	**SN54ALS1002 ★**	**713**
54ALS1003			
	National	DM54ALS1003	871-154
54ALS1004			
	National	DM54ALS1004	857-88
	TI	**SN54ALS1004 ★**	**713**
54ALS1005			
	National	DM54ALS1005	857-149
54ALS1008			
	National	DM54ALS1008	869-82
	TI	**SN54ALS1008 ★**	**713**
54ALS1010			
	National	DM54ALS1010	870-120
	TI	**SN54ALS1010A ★**	**713** 870-123
54ALS1011			
	National	DM54ALS1011	869-4
54ALS1020			
	National	DM54ALS1020	869-177
	TI	**SN54ALS1020 ★**	**713**
54ALS1032			
	National	DM54ALS1032	873-31
	TI	**SN54ALS1032 ★**	**713**
54ALS1034			
	National	DM54ALS1034	856-170
	TI	**SN54ALS1034 ★**	**713** 856-172
54ALS1035			
	National	DM54ALS1035	856-148
54ALS109			
	National	DM54ALS109	867-111
	TI	**SN54ALS109A ★**	**713** 867-113
54ALS11			
	National	DM54ALS11	869-5
	TI	**SN54ALS11A ★**	**712** 869-8
54ALS112			
	TI	**SN54ALS112A ★**	**713** 868-79
54ALS113			
	National	DM54ALS113	868-47
	TI	**SN54ALS113 ★**	**713**
54ALS114			
	TI	**SN54ALS114A ★**	**713** 868-113
54ALS12			
	National	DM54ALS12	870-169
	TI	**SN54ALS12A ★**	**712** 870-171
54ALS1240			
	National	DM54ALS1240	883-132
54ALS1241			
	National	DM54ALS1241	884-7
	TI	SN54ALS1241	884-11
54ALS1242			
	National	DM54ALS1242	883-39
54ALS1243			
	National	DM54ALS1243	883-40
54ALS1244			
	National	DM54ALS1244	884-61
	TI	**SN54ALS1244A ★**	**713** 884-65
54ALS1245			
	National	DM54ALS1245	885-61
	TI	**SN54ALS1245A ★**	**713** 885-67
54ALS13			
	National	DM54ALS13	887-107
54ALS131			
	National	DM54ALS131	863-162
54ALS132			
	National	DM54ALS132	887-153
54ALS133			
	National	DM54ALS133	872-54
	TI	**SN54ALS133 ★**	**713** 872-56
54ALS136			
	National	DM54ALS136	874-67
	TI	**SN54ALS136 ★**	**713**
54ALS137			
	National	DM54ALS137	863-149
	TI	**SN54ALS137 ★**	**713** 863-151
54ALS138			
	National	DM54ALS138	863-100
	TI	**SN54ALS138 ★**	**713** 863-102
54ALS139			
	TI	**SN54ALS139 ★**	**713**
54ALS14			
	National	DM54ALS14	888-31
54ALS15			
	National	DM54ALS15	869-48
	TI	**SN54ALS15A ★**	**712** 869-50
54ALS151			
	National	DM54ALS151	879-162
	TI	**SN54ALS151 ★**	**713** 879-164
54ALS153			
	National	DM54ALS153	877-128
	TI	**SN54ALS153 ★**	**713** 877-130
54ALS157			
	TI	**SN54ALS157 ★**	**713** 878-176
54ALS158			
	TI	**SN54ALS158 ★**	**713** 878-80
54ALS160			
	National	DM54ALS160	860-150
54ALS161			
	National	DM54ALS161	858-136
	TI	**SN54ALS161A ★**	**713** 858-138
54ALS162			
	National	DM54ALS162	861-1
	TI	**SN54ALS162A ★**	**713** 861-3
54ALS1620			
	National	DM54ALS1620	886-68
54ALS1621			
	National	DM54ALS1621	886-69
54ALS1623			
	National	DM54ALS1623	886-70
54ALS163			
	National	DM54ALS163	858-182
	TI	**SN54ALS163A ★**	**713** 858-184
54ALS1638			
	National	DM54ALS1638	884-110
54ALS1639			
	National	DM54ALS1639	884-111
54ALS1640			
	National	DM54ALS1640	884-153
54ALS165			
	National	DM54ALS165	882-51
54ALS166			
	National	DM54ALS166	882-68
54ALS168			
	National	DM54ALS168	861-80
54ALS169			
	National	DM54ALS169	859-122
	TI	**SN54ALS169B ★**	**713** 859-124
54ALS174			
	National	DM54ALS174	866-34
	TI	**SN54ALS174 ★**	**713** 866-36
54ALS175			
	National	DM54ALS175	864-269
	TI	**SN54ALS175 ★**	**713** 864-271
54ALS1805			
	TI	SN54ALS1805	864-157
54ALS190			
	National	DM54ALS190	861-158
54ALS191			
	National	DM54ALS191	859-166
	TI	**SN54ALS191 ★**	**713** 859-168
54ALS192			
	National	DM54ALS192	861-126
54ALS193			
	National	DM54ALS193	860-26
	TI	**SN54ALS193 ★**	**713** 860-28
54ALS20			
	National	DM54ALS20	869-178
	TI	**SN54ALS20A ★**	**713** 869-181
54ALS21			
	National	DM54ALS21	868-144
	TI	**SN54ALS21 ★**	**713** 868-148
54ALS22			
	National	DM54ALS22	868-145
	TI	**SN54ALS22B ★**	**713** 870-84
54ALS229			
	TI	SN54ALS229	3809-10
54ALS230			
	TI	SN54ALS230	883-110
54ALS231			
	TI	SN54ALS231	883-111
54ALS240			
	National	DM54ALS240	883-124
	TI	**SN54ALS240 ★**	**713**
54ALS241			
	National	DM54ALS241	884-8
	TI	**SN54ALS241 ★**	**713**
54ALS242			
	National	DM54ALS242	883-41
	TI	**SN54ALS242 ★**	**713**
54ALS243			
	National	DM54ALS243	883-42
	TI	**SN54ALS243 ★**	**713**

Arranged alphanumerically from left to right.

PART NUMBER INDEX

Base Number	Source	Device	Page-Line
54ALS244			
	National	DM54ALS244	884-62
	TI	**SN54ALS244**	★ **713**
54ALS245			
	National	DM54ALS245	885-62
	TI	**SN54ALS245**	★ **713**
54ALS251			
	National	DM54ALS251	880-39
	TI	**SN54ALS251**	★ **713**
			880-41
54ALS253			
	TI	**SN54ALS253**	★ **713**
			878-36
54ALS257			
	National	DM54ALS257	879-32
	TI	**SN54ALS257**	★ **713**
			879-36
54ALS258			
	National	DM54ALS258	878-119
	TI	**SN54ALS258**	★ **713**
			878-121
54ALS259			
	TI	**SN54ALS259**	★ **713**
54ALS27			
	National	DM54ALS27	865-44
	TI	**SN54ALS27**	★ **713**
			865-46
54ALS273			
	National	DM54ALS273	866-141
	TI	**SN54ALS273**	★ **713**
			866-143
54ALS28			
	National	DM54ALS28	865-106
	TI	**SN54ALS28A**	★ **713**
			874-2
54ALS2967			
	TI	SN54ALS2967	2892-72
54ALS2968			
	TI	**SN54ALS2968**	★ **1301**
			2892-73
54ALS299			
	TI	**SN54ALS299B**	★ **713**
			882-118
54ALS30			
	National	DM54ALS30	872-11
	TI	**SN54ALS30A**	★ **713**
			872-13
54ALS32			
	National	DM54ALS32	873-32
	TI	**SN54ALS32**	★ **713**
			873-35
54ALS323			
	TI	**SN54ALS323**	★ **713**
			882-119
54ALS33			
	National	DM54ALS33	865-73
	TI	**SN54ALS33A**	★ **713**
			865-75
54ALS352			
	National	DM54ALS352	878-11
	TI	**SN54ALS352**	★ **713**
			878-13
54ALS353			
	National	DM54ALS353	877-94
	TI	**SN54ALS353**	★ **713**
			877-96
54ALS37			
	National	DM54ALS37	871-57
	TI	**SN54ALS37A**	★ **713**
			871-59
54ALS373			
	National	DM54ALS373	875-161
	TI	SN54ALS373	875-165
54ALS374			
	National	DM54ALS374	866-166
	TI	**SN54ALS374**	★ **713**
			866-170
54ALS38			
	National	DM54ALS38	871-96
	TI	**SN54ALS38A**	★ **713**
			871-98
54ALS40			
	National	DM54ALS40	870-45
54ALS465			
	National	DM54ALS465	857-48
54ALS466			
	National	DM54ALS466	858-55
54ALS467			
	National	DM54ALS467	857-49
54ALS468			
	National	DM54ALS468	858-56
54ALS518			
	National	DM54ALS518	854-109
54ALS520			
	National	DM54ALS520	854-90
	TI	**SN54ALS520**	★ **713**
			854-96
54ALS521			
	National	DM54ALS521	854-91
54ALS522			
	National	DM54ALS522	854-92
54ALS533			
	National	DM54ALS533	876-44
	TI	**SN54ALS533**	★ **713**
			876-50
54ALS534			
	National	DM54ALS534	866-106
	TI	**SN54ALS534**	★ **713**
			866-112
54ALS539			
	Motorola	SN54ALS539	863-5
54ALS540			
	TI	**SN54ALS540**	★ **713**
54ALS541			
	TI	**SN54ALS541**	★ **713**
54ALS561			
	Motorola	SN54ALS561	859-91
	TI	**SN54ALS561A**	★ **713**
			859-92
54ALS563			
	National	DM54ALS563	876-45
	TI	**SN54ALS563**	★ **713**
			876-51
54ALS564			
	National	DM54ALS564	866-107
	TI	**SN54ALS564**	★ **713**
			866-113
54ALS569			
	TI	**SN54ALS569A**	★ **713**
			860-8
54ALS573			
	National	DM54ALS573	875-162
	TI	**SN54ALS573**	★ **713**
			875-166
54ALS574			
	National	DM54ALS574	866-167
	TI	**SN54ALS574**	★ **713**
			866-171
54ALS575			
	TI	**SN54ALS575**	★ **713**
			866-172
54ALS576			
	National	DM54ALS576	869-83
	TI	**SN54ALS576**	★ **713**
			866-114
54ALS577			
	TI	**SN54ALS577**	★ **713**
			866-173
54ALS580			
	National	DM54ALS580	876-46
	TI	**SN54ALS580**	★ **713**
			876-52
54ALS620			
	National	DM54ALS620	886-71
	TI	**SN54ALS620A**	★ **713**
			886-78
54ALS622			
	National	DM54ALS622	886-32
54ALS623			
	National	DM54ALS623	886-72
	TI	**SN54ALS623A**	★ **713**
			886-79
54ALS632			
	Intech	SN54ALS632	¶ 400-8
	National	MM54ALS632	2878-39
	TI	**SN54ALS632**	★ **729**
			★ **1228**
			889-67
			¶ 368-17
			★ **729**
			★ **1228**
			2878-52
54ALS633			
	Intech	SN54ALS633	¶ 400-8
	National	MM54ALS633	2878-40
	TI	SN54ALS633	¶ 368-17
54ALS634			
	Intech	SN54ALS634	¶ 400-8
	National	MM54ALS634	2878-41
	TI	SN54ALS634	¶ 368-17
54ALS635			
	Intech	SN54ALS635	¶ 400-8
	National	MM54ALS635	2878-42
	TI	SN54ALS635	¶ 368-17
54ALS638			
	National	DM54ALS638	884-112
54ALS639			
	National	DM54ALS639	884-113
54ALS640			
	TI	**SN54ALS640A**	★ **713**
			884-158
54ALS641			
	National	DM54ALS641	885-39
54ALS642			
	National	DM54ALS642	884-131
54ALS643			
	National	DM54ALS643	884-154
54ALS644			
	National	DM54ALS644	885-137
54ALS645			
	National	DM54ALS645	885-63
	TI	**SN54ALS645**	★ **713**
54ALS646			
	National	DM54ALS646	886-131
	TI	**SN54ALS646**	★ **713**
			★ **1239**
			885-169
54ALS647			
	National	DM54ALS647	885-157
54ALS648			
	National	DM54ALS648	886-132
	TI	**SN54ALS648**	★ **713**
			★ **1239**
			885-170
54ALS649			
	National	DM54ALS649	885-158
54ALS651			
	TI	**SN54ALS651**	★ **713**
			885-68
			885-171
54ALS652			
	TI	**SN54ALS652**	★ **713**
			885-69
			885-172
54ALS688			
	TI	**SN54ALS688**	★ **713**
			854-132
54ALS689			
	National	DM54ALS689	854-110
54ALS74			
	National	DM54ALS74	864-217
	TI	**SN54ALS74A**	★ **713**
			864-219
54ALS758			
	TI	SN54ALS758	883-102
54ALS759			
	TI	SN54ALS759	883-98
54ALS760			
	TI	SN54ALS760	884-100
54ALS804			
	National	DM54ALS804	864-146
	TI	**SN54ALS804**	★ **713**
			864-148
54ALS805			
	National	DM54ALS805	864-155
	TI	**SN54ALS805**	★ **713**
			864-158
54ALS808			
	National	DM54ALS808	864-137
	TI	**SN54ALS808**	★ **713**
			864-139
54ALS810			
	National	DM54ALS810	874-149
54ALS811			
	National	DM54ALS811	874-163
54ALS818			
	TI	**SN54ALS818**	★ **1244**
54ALS819			
	TI	**SN54ALS819**	★ **1244**
54ALS832			
	National	DM54ALS832	864-165
			873-75
	TI	**SN54ALS832**	★ **713**
			864-167
			873-77
54ALS857			
	TI	**SN54ALS857**	★ **713**
54ALS86			
	National	DM54ALS86	874-102
	TI	**SN54ALS86**	★ **713**
			874-104
54ALS873			
	National	DM54ALS873	875-8
	TI	**SN54ALS873**	★ **713**
			875-10
54ALS874			
	TI	**SN54ALS874**	★ **713**
			864-183
54ALS876			
	National	DM54ALS876	864-180
	TI	**SN54ALS876**	★ **713**
			864-184
54ALS878			
	TI	**SN54ALS878**	★ **713**
			864-185
54ALS879			
	TI	**SN54ALS879**	★ **713**
			864-186
54ALS880			
	National	DM54ALS880	875-93
54ALS996			
	TI	**SN54ALS996**	★ **1300**
			875-151
54AS00	National	DM54AS00	871-5
	TI	**SN54AS00**	★ **713**
54AS02	National	DM54AS02	874-6
	TI	**SN54AS02**	★ **713**
			874-10
54AS04	National	DM54AS04	857-94
	TI	SN54AS04	857-98
54AS08	National	DM54AS08	869-90
	TI	**SN54AS08**	★ **713**
			869-94
54AS10	National	DM54AS10	870-127
	TI	**SN54AS10**	★ **713**
			870-129
54AS1000			
	National	DM54AS1000	871-6
54AS1004			
	National	DM54AS1004	857-95
	TI	**SN54AS1004**	★ **714**
			857-99
54AS1008			
	National	DM54AS1008	869-91
54AS1032			
	National	DM54AS1032	873-38
	TI	**SN54AS1032**	★ **714**
			873-42
54AS1034			
	National	DM54AS1034	856-140
			856-174
	TI	**SN54AS1034**	★ **714**
			856-142
			856-176
54AS1036			
	National	DM54AS1036	864-56
			874-7
54AS109			
	National	DM54AS109	867-115
	TI	**SN54AS109**	★ **713**
			867-117
54AS11	National	DM54AS11	869-11
	TI	**SN54AS11**	★ **713**
			869-13
54AS136			
	TI	SN54AS136	874-61
54AS138			
	TI	**SN54AS138**	★ **713**
			863-106
54AS157			
	TI	**SN54AS157**	★ **713**
			878-178
54AS158			
	National	DM54AS158	878-82
	TI	**SN54AS158**	★ **713**
			878-84

¶ Indicates page number in Application Note Directory.
★ Indicates additional data is provided on the page noted.

Base Number	Source	Device	Page-Line
54AS160			
	National	DM54AS160	860-153
54AS161			
	National	DM54AS161	858-140
	TI	**SN54AS161**	★ **713**
			858-144
54AS162			
	National	DM54AS162	858-141
54AS163			
	National	DM54AS163	858-186
	TI	**SN54AS163**	★ **713**
			858-188
54AS168			
	National	DM54AS168	861-83
54AS169			
	National	DM54AS169	859-126
	TI	**SN54AS169**	★ **713**
			859-128
54AS174			
	National	DM54AS174	866-38
	TI	**SN54AS174**	★ **713**
			866-40
54AS175			
	National	DM54AS175	864-273
54AS181			
	National	DM54AS181B	855-27
	TI	**SN54AS181A**	★ **713**
			855-31
54AS182			
	National	DM54AS182	855-89
	TI	**SN54AS182**	★ **713**
			855-95
54AS1881			
	TI	SN54AS1881	855-32
54AS194			
	TI	**SN54AS194**	★ **713**
			881-127
54AS20	National	DM54AS20	869-184
	TI	**SN54AS20**	★ **713**
			869-186
54AS21	National	DM54AS21	868-150
	TI	**SN54AS21**	★ **713**
			868-152
54AS230			
	National	DM54AS230	884-70
	TI	**SN54AS230**	★ **713**
			883-116
54AS231			
	National	DM54AS231	884-71
	TI	**SN54AS231**	★ **713**
			883-117
54AS240			
	National	DM54AS240	883-133
	TI	**SN54AS240**	★ **713**
54AS241			
	National	DM54AS241	884-19
	TI	**SN54AS241**	★ **713**
54AS242			
	National	DM54AS242	883-51
	TI	**SN54AS242**	★ **713**
54AS243			
	National	DM54AS243	883-52
54AS244			
	National	DM54AS244	884-72
	TI	**SN54AS244**	★ **713**
54AS245			
	National	DM54AS245	885-78
54AS257			
	National	DM54AS257	879-33
	TI	**SN54AS257**	★ **713**
			879-38
54AS258			
	National	DM54AS258	878-123
54AS2620			
	National	DM54AS2620	885-32
54AS264			
	National	DM54AS264	855-90
54AS27	National	DM54AS27	865-48
	TI	**SN54AS27**	★ **713**
			865-50
54AS280			
	National	DM54AS280	889-14
54AS282			
	National	DM54AS282	855-91
54AS286			
	National	DM54AS286	889-42
54AS29822			
	TI	SN54AS29822	882-171
54AS29823			
	TI	SN54AS29823	882-160
54AS29824			
	TI	SN54AS29824	882-161
54AS29825			
	TI	SN54AS29825	882-39
54AS29826			
	TI	SN54AS29826	882-40
54AS29841			
	TI	SN54AS29841	876-126
54AS29842			
	TI	SN54AS29842	876-127
54AS29843			
	TI	SN54AS29843	876-109
54AS29844			
	TI	SN54AS29844	876-110
54AS29845			
	TI	SN54AS29845	876-89
54AS29846			
	TI	SN54AS29846	876-90
54AS30	National	DM54AS30	872-15
	TI	**SN54AS30**	★ **713**
			872-17
54AS32	National	DM54AS32	873-39
54AS34	National	DM54AS34	856-145
54AS373			
	National	DM54AS373	875-169
	TI	**SN54AS373**	★ **713**
			875-173
54AS374			
	National	DM54AS374	866-178
	TI	**SN54AS374**	★ **713**
			866-186
54AS533			
	National	DM54AS533	876-56
54AS534			
	National	DM54AS534	866-108
54AS573			
	National	DM54AS573	875-170
	TI	**SN54AS573**	★ **713**
			875-174
54AS574			
	National	DM54AS574	866-179
	TI	**SN54AS574**	★ **713**
			866-187
54AS575			
	National	DM54AS575	866-180
	TI	**SN54AS575**	★ **713**
			866-188
54AS576			
	National	DM54AS576	866-119
	TI	**SN54AS576**	★ **713**
			866-121
54AS577			
	National	DM54AS577	866-181
54AS580			
	National	DM54AS580	876-57
54AS620			
	National	DM54AS620	886-84
54AS621			
	National	DM54AS621	886-42
54AS622			
	National	DM54AS622	886-43
54AS623			
	National	DM54AS623	886-85
54AS638			
	National	DM54AS638	884-122
54AS639			
	National	DM54AS639	884-123
54AS640			
	National	DM54AS640	884-167
	TI	**SN54AS640**	★ **713**
			884-177
54AS641			
	National	DM54AS641	885-43
54AS642			
	National	DM54AS642	884-135
54AS643			
	National	DM54AS643	884-168
54AS644			
	National	DM54AS644	884-169
54AS645			
	National	DM54AS645	885-79
	TI	**SN54AS645**	★ **713**
			885-82
54AS646			
	National	DM54AS646	885-181
	TI	**SN54AS646**	★ **713**
			885-184
54AS648			
	National	DM54AS648	885-182
	TI	**SN54AS648**	★ **713**
			885-185
54AS651			
	National	DM54AS651	884-170
	TI	**SN54AS651**	★ **713**
			885-1
54AS652			
	National	DM54AS652	884-171
	TI	**SN54AS652**	★ **713**
			885-2
54AS74	National	DM54AS74	864-221
	TI	**SN54AS74**	★ **713**
			864-223
54AS804			
	TI	**SN54AS804B**	★ **713**
			864-152
54AS805			
	TI	**SN54AS805B**	★ **713**
			864-162
54AS808			
	TI	**SN54AS808B**	★ **713**
			864-143
54AS821			
	TI	**SN54AS821**	★ **713**
			867-67
54AS822			
	TI	**SN54AS822**	★ **713**
			867-65
54AS832			
	TI	**SN54AS832B**	★ **713**
			864-171
54AS841			
	TI	**SN54AS841**	★ **713**
			876-118
54AS86	National	DM54AS86	874-106
	TI	SN54AS86	874-86
54AS866			
	TI	**SN54AS866**	★ **713**
			856-69
54AS867			
	TI	**SN54AS867**	★ **713**
			859-109
			¶ 356-17
54AS869			
	TI	**SN54AS869**	★ **714**
			859-110
			¶ 356-17
54AS873			
	National	DM54AS873	875-12
54AS874			
	National	DM54AS874	864-191
	TI	**SN54AS874**	★ **714**
			864-199
54AS876			
	National	DM54AS876	864-192
	TI	**SN54AS876**	★ **714**
			864-200
54AS878			
	National	DM54AS878	864-193
54AS879			
	National	DM54AS879	864-194
54AS880			
	National	DM54AS880	875-96
54AS881			
	National	DM54AS881B	855-28
	TI	**SN54AS881B**	★ **714**
			855-33
54AS882			
	TI	**SN54AS882**	★ **714**
			855-96
54AS885			
	TI	**SN54AS885**	★ **714**
			854-134
54AS888			
	TI	**SN54AS888**	★ **1260**
			844-87
			1449-109
54AS890			
	TI	**SN54AS890**	★ **1276**
			1449-111
54AS95	National	DM54AS95	881-71
54C00	National	MM54C00	825-47
54C02	National	MM54C02	827-116
54C04	National	MM54C04	810-180
54C08	National	MM54C08	824-50
54C10	National	MM54C10	824-176
54C107	National	MM54C107	823-109
54C138	**Harris**	**HS54C138RH**	★ **630**
			818-2
54C14	National	MM54C14	839-12
			¶ 361-13
54C150	National	MM54C150	833-158
54C151	National	MM54C151	833-26
54C154	National	MM54C154	819-14
54C157	National	MM54C157	832-59
54C160	National	MM54C160	814-164
54C161	National	MM54C161	811-175
54C162	National	MM54C162	814-115
54C163	National	MM54C163	811-119
54C164	National	MM54C164	836-33
			3856-64
54C165	National	MM54C165	835-179
			3856-35
54C173	National	MM54C173	820-132
54C174	National	MM54C174	820-179
54C175	National	MM54C175	820-87
54C192	National	MM54C192	815-27
54C193	National	MM54C193	812-38
54C195	National	MM54C195	835-89
			3855-7
54C20	National	MM54C20	824-116
54C200	National	MM54C200	831-113
			3832-86
54C221	National	MM54C221	834-2
54C240	National	MM54C240	839-66
54C244	National	MM54C244	840-66
54C30	National	MM54C30	825-144
54C32	National	MM54C32	826-126
54C374	National	MM54C374	822-50
54C42	National	MM54C42	817-3
54C48	National	MM54C48	817-55
54C73	National	MM54C73	823-110
54C74	National	MM54C74	820-15
54C76	National	MM54C76	822-174
54C83	National	MM54C83	806-33
54C85	National	MM54C85	807-27
54C86	National	MM54C86	828-22
54C89	National	MM54C89	831-98
54C90	National	MM54C90	814-159
54C901	National	MM54C901	809-104
			¶ 400-15
54C902	National	MM54C902	809-106
			¶ 400-15
54C903	National	MM54C903	809-100
			¶ 400-15
54C904	National	MM54C904	809-102
			¶ 400-15
54C905	National	MM54C905	838-13
54C906	National	MM54C906	809-96
54C907	National	MM54C907	809-98
54C909	National	MM54C909	837-62
			3316-13
54C910	National	MM54C910	831-132
54C914	National	MM54C914	839-13
54C915	National	MM54C915	820-9
			2877-21
54C920	National	MM54C920	¶ 437-9
54C921	National	MM54C921	¶ 437-9
54C922	National	MM54C922	2880-1
			¶ 356-15
54C923	National	MM54C923	2880-5
54C929	National	MM54C929	¶ 437-9
54C93	National	MM54C93	811-112
54C930	National	MM54C930	¶ 437-9
54C941	National	MM54C941	810-42
			2882-25
54C95	National	MM54C95	835-27
			3855-21
54F00	**Fairchild**	**54F00**	★ **607**
			★ **610**
			★ **620**
			★ **623**
			★ **1021**
			871-11
	Motorola	**MC54F00**	★ **1122**
			871-13
	Signetics	54F00	871-15

Arranged alphanumerically from left to right.

Base Number	Source	Device	Page-Line
54F02	Fairchild	54F02	★ 607
			★ 610
			★ 620
			★ 623
			★ 1021
			874-13
	Motorola	MC54F02	★ 1122
			874-15
54F04	Fairchild	54F04	★ 607
			★ 610
			★ 620
			★ 623
			★ 1021
			857-102
	Motorola	MC54F04	★ 1124
			857-104
	Signetics	54F04	857-106
54F08	Fairchild	54F08	★ 607
			★ 610
			★ 620
			★ 623
			★ 1021
			869-97
	Motorola	MC54F08	★ 1122
			869-99
54F10	Fairchild	54F10	★ 607
			★ 610
			★ 620
			★ 623
			★ 1021
			870-131
	Motorola	MC54F10	★ 1122
			870-110
54F109	Fairchild	54F109	★ 607
			★ 610
			★ 620
			★ 623
			★ 1021
			867-119
	Motorola	MC54F109	★ 1126
			867-121
54F11	Fairchild	54F11	★ 607
			★ 610
			★ 620
			★ 623
			★ 1021
			869-15
	Motorola	MC54F11	★ 1122
			869-17
54F112	Fairchild	54F112	★ 1021
			868-81
	Motorola	MC54F112	★ 1126
			868-83
54F113	Fairchild	54F113	★ 1021
			868-49
	Motorola	MC54F113	★ 1126
			868-51
54F114	Fairchild	54F114	★ 1021
			868-115
	Motorola	MC54F114	★ 1126
			868-117
54F13	Fairchild	54F13	★ 1021
			887-109
54F132	Fairchild	54F132	★ 1021
			887-155
54F138	Fairchild	54F138	★ 607
			★ 610
			★ 620
			★ 623
			★ 1025
			863-108
	Motorola	MC54F138	★ 1130
			863-110
54F139	Fairchild	54F139	★ 607
			★ 610
			★ 620
			★ 623
			★ 1025
			863-6
	Motorola	MC54F139	★ 1130
			863-8
	Signetics	54F139	863-10
54F14	Fairchild	54F14	★ 1021
			888-33
54F146	Fairchild	54F146	★ 1028

Base Number	Source	Device	Page-Line
54F148	Fairchild	54F148	★ 1028
			888-151
54F151	Fairchild	54F151	★ 610
			★ 1025
			879-167
	Motorola	MC54F151	★ 1129
			879-169
54F153	Fairchild	54F153	★ 607
			★ 610
			★ 620
			★ 623
			★ 1025
			877-133
	Motorola	MC54F153	★ 1129
			877-135
54F157	Fairchild	54F157	★ 610
			★ 1025
			879-1
	Motorola	MC54F157	★ 1129
			879-3
	Signetics	54F157	879-5
54F158	Fairchild	54F158	★ 610
			★ 1025
			878-86
	Motorola	MC54F158	★ 1129
			878-88
	Signetics	54F158	878-90
54F160	Fairchild	54F160A	★ 610
			★ 1023
			860-156
	Motorola	MC54F160A	★ 1127
			860-158
54F161	Fairchild	54F161A	★ 610
			★ 1023
			858-146
	Motorola	MC54F161A	★ 1127
			858-148
54F162	Fairchild	54F162A	★ 610
			★ 1023
			861-6
	Motorola	MC54F162A	★ 1127
			861-8
54F163	Fairchild	54F163A	★ 610
			★ 1023
			859-1
	Motorola	MC54F163A	★ 1127
			859-3
54F164	Fairchild	54F164	★ 610
			★ 1023
			882-1
54F168	Fairchild	54F168	★ 1023
			861-86
	Motorola	MC54F168	★ 1127
			861-88
54F169	Fairchild	54F169	★ 1023
			859-130
	Motorola	MC54F169	★ 1127
			859-134
54F174	Fairchild	54F174	★ 610
			★ 1022
			866-42
	Motorola	MC54F174	★ 1126
			866-44
54F175	Fairchild	54F175	★ 607
			★ 610
			★ 620
			★ 623
			★ 1022
			864-276
	Motorola	MC54F175	★ 1126
			864-278
54F181	Fairchild	54F181	★ 1026
			855-37
	Motorola	MC54F181	★ 1132
			855-43
	Signetics	54F181	855-49
54F182	Fairchild	54F182	★ 1027
			855-101
	Motorola	MC54F182	★ 1132
			855-103
54F189	Fairchild	54F189	★ 610
			★ 1027
			877-54
	Motorola	MC54F189	877-58
54F190	Fairchild	54F190	★ 610
			★ 1023
			(Continued)

Base Number	Source	Device	Page-Line
54F190	Fairchild	54F190	861-161
	Motorola	MC54F190	★ 1127
			861-163
54F191	Fairchild	54F191	★ 610
			★ 1023
			859-170
	Motorola	MC54F191	★ 1127
			859-172
54F192	Fairchild	54F192	★ 610
			★ 1023
			861-129
	Motorola	MC54F192	★ 1127
			861-131
54F193	Fairchild	54F193	★ 610
			★ 1023
			860-30
	Motorola	MC54F193	★ 1127
			860-32
54F194	Fairchild	54F194	★ 610
			★ 1023
			881-129
	Motorola	MC54F194	★ 1128
			881-131
54F195	Fairchild	54F195	★ 1023
			881-38
	Motorola	MC54F195	881-40
54F20	Fairchild	54F20	★ 607
			★ 610
			★ 620
			★ 623
			★ 1021
			870-1
	Motorola	MC54F20	★ 1122
			870-3
	Signetics	54F20	870-5
54F211	Fairchild	54F211	★ 1027
			877-78
54F212	Fairchild	54F212	★ 1027
			877-79
54F213	Fairchild	54F213	★ 1027
			877-84
54F219	Fairchild	54F219	★ 610
			★ 1027
			877-55
54F240	Fairchild	54F240	★ 607
			★ 610
			★ 620
			★ 623
			★ 1024
			883-139
			★ 607
			★ 610
			★ 620
			★ 623
			★ 1024
			2882-42
	Motorola	MC54F240	★ 1124
			883-143
	Signetics	54F240	883-145
54F241	Fairchild	54F241	★ 607
			★ 610
			★ 620
			★ 623
			★ 1024
			884-22
	Motorola	MC54F241	★ 1124
			884-26
	Signetics	54F241	884-28
54F242	Fairchild	54F242	★ 1024
			883-57
	Motorola	MC54F242	★ 1124
			883-61
	Signetics	54F242	883-65
54F243	Fairchild	54F243	★ 610
			★ 1024
			883-58
	Motorola	MC54F243	★ 1124
			883-62
	Signetics	54F243	883-66
54F244	Fairchild	54F244	★ 607
			★ 610
			★ 620
			★ 623
			★ 1024
			884-77
	Motorola	MC54F244	★ 1124
			(Continued)

Base Number	Source	Device	Page-Line
54F244	Motorola	MC54F244	884-79
	Signetics	54F244	884-81
54F245	Fairchild	54F245	★ 610
			★ 1024
			885-85
	Motorola	MC54F245	★ 1124
			885-89
			2890-61
	Signetics	54F245	885-95
54F251	Fairchild	54F251A	★ 610
			★ 1025
			880-44
	Motorola	MC54F251	★ 1129
			880-46
54F253	Fairchild	54F253	★ 607
			★ 610
			★ 620
			★ 623
			★ 1025
			878-39
	Motorola	MC54F253	★ 1129
			878-41
54F256	Fairchild	54F256	★ 1022
			875-15
54F257	Fairchild	54F257	★ 610
			★ 1025
			879-40
	Motorola	MC54F257	★ 1129
			879-42
	Signetics	54F257	879-44
54F258	Fairchild	54F258	★ 611
			★ 1025
			878-126
	Motorola	MC54F258	★ 1129
			878-128
	Signetics	54F258	878-130
54F259	Fairchild	54F259	★ 1022
			875-135
54F269	Fairchild	54F269	★ 1023
			859-131
	Signetics	54F269	859-136
54F273	Fairchild	54F273	★ 1022
			866-145
	Signetics	54F273	866-147
54F280	Fairchild	54F280	★ 607
			★ 611
			★ 620
			★ 623
			★ 1026
			889-17
	Motorola	MC54F280	★ 1132
			889-19
	Signetics	54F280	889-21
54F283	Fairchild	54F283	★ 607
			★ 611
			★ 620
			★ 623
			★ 1025
			856-32
	Motorola	MC54F283	★ 1132
			856-34
54F289	Fairchild	54F289	877-38
	Motorola	MC54F289	877-42
54F2960			
	Motorola	MC54F2960	★ 1132
			885-90
			1448-103
54F2961			
	Motorola	MC54F2961	1448-110
54F2962			
	Motorola	MC54F2962	1448-111
54F2968			
	Motorola	MC54F2968	1448-99
54F2969			
	Motorola	MC54F2969	1448-122
54F2970			
	Motorola	MC54F2970	1448-125
54F298	Fairchild	54F298	★ 1025
			879-83
54F299	Fairchild	54F299	★ 1023
			882-124
	Motorola	MC54F299	882-128
54F30240			
	Fairchild	54F30240	★ 1024
54F30241			
	Fairchild	54F30241	★ 1024

¶ Indicates page number in Application Note Directory.
★ Indicates additional data is provided on the page noted.

Base Number	Source	Device	Page-Line
54F30244			
	Fairchild	**54F30244**	**★1024**
54F3037			
	Fairchild	**54F3037**	**★1021**
			888-17
	Signetics	54F3037	887-65
54F3038			
	Fairchild	**54F3038**	**★1021**
54F3040			
	Fairchild	**54F3040**	**★1021**
			887-130
	Signetics	54F3040	886-163
54F311	Fairchild	54F311	877-74
54F312	Fairchild	54F312	877-75
54F313	Fairchild	54F313	877-82
54F319	Fairchild	54F319	877-39
54F32	**Fairchild**	**54F32**	**★ 607**
			★ 610
			★ 620
			★ 623
			★1021
			873-45
	Motorola	**MC54F32**	**★1122**
			873-47
54F321	**Fairchild**	**54F321**	**★ 620**
54F322	**Fairchild**	**54F322**	**★ 611**
			★1023
			882-88
54F323	**Fairchild**	**54F323**	**★1023**
			882-125
	Motorola	MC54F323	882-129
54F333	**Fairchild**	**54F333**	**★ 620**
54F350	**Fairchild**	**54F350**	**★1025**
			★1027
			843-119
	Motorola	**MC54F350**	**★1132**
			843-124
54F352	**Fairchild**	**54F352**	**★ 607**
			★ 611
			★ 620
			★ 623
			★1025
			878-16
	Motorola	**MC54F352**	**★1129**
			878-18
54F353	**Fairchild**	**54F353**	**★ 607**
			★ 611
			★ 620
			★ 623
			★1025
			877-99
	Motorola	**MC54F353**	**★1129**
			877-101
54F365	**Fairchild**	**54F365**	**★1024**
			856-178
	Signetics	54F365	857-2
54F366	**Fairchild**	**54F366**	**★1024**
			858-9
			864-123
	Signetics	54F366	858-13
			864-125
54F367	**Fairchild**	**54F367**	**★1024**
			856-179
	Signetics	54F367	857-3
54F368	**Fairchild**	**54F368**	**★1024**
			858-10
	Signetics	54F368	858-14
54F37	**Fairchild**	**54F37**	**★1021**
			871-61
54F373	**Fairchild**	**54F373**	**★ 607**
			★ 611
			★ 620
			★ 623
			★1022
			875-177
	Motorola	**MC54F373**	**★1126**
			876-2
	Signetics	54F373	876-4
54F374	**Fairchild**	**54F374**	**★ 607**
			★ 611
			★ 620
			★ 623
			★1022
			867-1
	Motorola	**MC54F374**	**★1126**
			(Continued)
54F374	Motorola	MC54F374	867-5
	Signetics	54F374	867-7
54F377	**Fairchild**	**54F377**	**★1022**
			867-36
	Signetics	54F377	867-38
54F378	**Fairchild**	**54F378**	**★ 611**
			★1022
			866-73
	Motorola	**MC54F378**	**★1126**
			866-75
54F379	**Fairchild**	**54F379**	**★1022**
			864-320
	Motorola	**MC54F379**	**★1126**
			864-322
54F38	**Fairchild**	**54F38**	**★1021**
			871-100
54F381	**Fairchild**	**54F381**	**★1026**
			855-38
	Motorola	**MC54F381**	**★1132**
			855-44
54F382	**Fairchild**	**54F382**	**★1026**
			855-39
	Motorola	MC54F382	855-45
54F384	**Fairchild**	**54F384**	**★1026**
			843-19
54F385	**Fairchild**	**54F385**	**★ 611**
			★1025
			854-5
54F395	**Fairchild**	**54F395**	**★1023**
			881-101
54F398	**Fairchild**	**54F398**	**★ 611**
			★ 620
			★ 623
			★1022
			★1025
			879-84
54F399	**Fairchild**	**54F399**	**★ 611**
			★ 620
			★ 623
			★1022
			★1025
			879-85
54F40	**Fairchild**	**54F40**	**★1021**
			870-48
54F401	**Fairchild**	**54F401**	**★1028**
			854-155
			2878-8
54F402	**Fairchild**	**54F402**	**★1022**
			★1028
			881-13
			★1022
			★1028
			2878-14
54F403	**Fairchild**	**54F403**	**★1027**
			3809-3
54F407	**Fairchild**	**54F407**	**★1027**
			876-131
54F410	**Fairchild**	**54F410**	**★1022**
			★1027
			877-68
54F411	**Fairchild**	**54F411**	**★1027**
54F412	**Fairchild**	**54F412**	**★ 611**
			★1022
			875-178
54F413	**Fairchild**	**54F413**	**★1027**
			3809-59
54F416	Fairchild	54F416	2878-25
54F418	Fairchild	54F418	2878-26
			2879-3
54F420	**Fairchild**	**54F420**	**★1027**
			2878-27
54F430	Fairchild	54F430	2879-1
54F432	**Fairchild**	**54F432**	**★1022**
			875-179
54F433	**Fairchild**	**54F433**	**★1027**
			3809-60
54F492	Fairchild	54F492	2878-12
54F500	**Fairchild**	**54F500**	**★1028**
			2832-9
54F510	Fairchild	54F510	843-120
54F521	**Fairchild**	**54F521**	**★ 611**
			★ 623
			★1026
			854-100
	Motorola	**MC54F521**	**★1131**
			(Continued)
54F521	Motorola	MC54F521	854-102
	Signetics	54F521	854-104
54F524	**Fairchild**	**54F524**	**★1026**
			854-35
54F525	**Fairchild**	**54F525**	**★1023**
			★1026
			862-31
			889-61
54F526	Fairchild	54F526	886-110
54F533	**Fairchild**	**54F533**	**★ 607**
			★ 611
			★ 623
			★1022
			876-62
	Motorola	**MC54F533**	**★1126**
			876-65
	Signetics	54F533	876-67
54F534	**Fairchild**	**54F534**	**★ 611**
			★1022
			866-123
	Motorola	**MC54F534**	**★1127**
			866-125
	Signetics	54F534	866-127
54F537	**Fairchild**	**54F537**	**★1025**
			862-148
	Motorola	MC54F537	862-150
54F538	**Fairchild**	**54F538**	**★1025**
			863-141
	Motorola	MC54F538	863-143
54F539	**Fairchild**	**54F539**	**★1025**
			863-62
	Motorola	MC54F539	863-64
54F540	**Fairchild**	**54F540**	**★1024**
			883-140
	Signetics	54F540	883-146
54F541	**Fairchild**	**54F541**	**★1024**
			884-23
54F543	**Fairchild**	**54F543**	**★1024**
			886-1
54F544	**Fairchild**	**54F544**	**★1024**
			886-2
54F545	**Fairchild**	**54F545**	**★ 611**
			★1024
			885-86
	Signetics	54F545	885-96
54F547	**Fairchild**	**54F547**	**★ 611**
			★1025
			863-93
54F548	**Fairchild**	**54F548**	**★ 611**
			★1025
			863-94
54F550	**Fairchild**	**54F550**	**★1024**
			886-3
54F551	**Fairchild**	**54F551**	**★1024**
			886-4
54F552	**Fairchild**	**54F552**	**★1024**
			886-5
54F557	Fairchild	54F557	843-20
54F558	Fairchild	54F558	843-21
54F559	Fairchild	54F559	855-122
54F563	**Fairchild**	**54F563**	**★1022**
54F564	**Fairchild**	**54F564**	**★1022**
54F568	**Fairchild**	**54F568**	**★1023**
			861-73
54F569	**Fairchild**	**54F569**	**★1023**
			859-113
54F570	Fairchild	54F570	877-35
54F571	Fairchild	54F571	877-33
54F573	**Fairchild**	**54F573**	**★1022**
			875-180
54F574	**Fairchild**	**54F574**	**★1022**
			867-2
54F579	**Fairchild**	**54F579**	**★1023**
			859-114
	Signetics	54F579	861-75
54F582	**Fairchild**	**54F582**	**★1026**
54F583	**Fairchild**	**54F583**	**★ 611**
			★1025
			854-163
54F588	**Fairchild**	**54F588**	**★1024**
			887-23
54F595	**Fairchild**	**54F595**	**★1023**
			882-92
54F597	**Fairchild**	**54F597**	**★1023**
			882-77
54F598	**Fairchild**	**54F598**	**★1023**
			882-78
54F604	**Fairchild**	**54F604**	**★1022**
			875-99
	Signetics	54F604	875-107
54F605	Fairchild	54F605	875-100
	Signetics	54F605	875-108
54F606	Fairchild	54F606	875-101
54F607	Fairchild	54F607	875-102
54F610	Fairchild	54F610	887-26
54F611	Fairchild	54F611	887-27
54F612	Fairchild	54F612	887-28
54F613	Fairchild	54F613	887-29
54F620	**Fairchild**	**54F620**	**★1024**
			886-90
	Motorola	**MC54F620**	**★1125**
			886-94
	Signetics	54F620	886-98
54F621	**Fairchild**	**54F621**	**★1024**
			886-48
	Motorola	MC54F621	886-52
54F622	**Fairchild**	**54F622**	**★1024**
			886-49
54F623	**Fairchild**	**54F623**	**★1024**
			886-91
	Motorola	**MC54F623**	**★1125**
			886-95
54F630	**Fairchild**	**54F630**	**★1027**
			2878-28
	Signetics	54F630	2878-48
54F631	Fairchild	54F631	2878-29
	Signetics	54F631	2878-49
54F632	**Fairchild**	**54F632**	**★1027**
54F64	**Fairchild**	**54F64**	**★ 607**
			★ 610
			★ 620
			★ 623
			★1021
			873-1
	Motorola	**MC54F64**	**★1123**
			873-3
	Signetics	54F64	873-5
54F640	**Motorola**	**MC54F640**	**★1125**
			885-7
54F643	**Motorola**	**MC54F643**	**★1125**
			885-8
54F645	Motorola	MC54F645	885-91
54F646	**Fairchild**	**54F646**	**★1024**
			886-6
	Signetics	54F646	886-15
54F647	Signetics	54F647	885-159
54F648	**Fairchild**	**54F648**	**★1024**
			886-7
	Signetics	54F648	886-16
54F649	Signetics	54F649	885-160
54F655	**Fairchild**	**54F655**	**★1024**
			858-51
	Signetics	54F655	858-53
54F656	**Fairchild**	**54F656**	**★1024**
			857-44
	Signetics	54F656	857-46
54F657	**Fairchild**	**54F657**	**★1024**
			885-146
	Signetics	54F657	885-148
54F673	**Fairchild**	**54F673**	**★1023**
			883-21
			3856-99
54F674	**Fairchild**	**54F674**	**★1023**
			883-8
			3856-100
54F675	**Fairchild**	**54F675**	**★1023**
			883-18
			3856-101
54F676	**Fairchild**	**54F676**	**★ 611**
			★1023
			883-15
			★ 611
			★1023
			3856-102
54F701	**Fairchild**	**54F701**	**★1028**
54F702	**Fairchild**	**54F702**	**★1024**
54F74	**Fairchild**	**54F74**	**★ 607**
			★ 610
			★ 620
			★ 623
			★1021
			(Continued)

Arranged alphanumerically from left to right.

PART NUMBER INDEX

Base Number	Source	Device	Page-Line
54F74	Fairchild	54F74	864-225
	Motorola	**MC54F74**	★ 1126 864-227
54F779	**Fairchild**	**54F779**	★ 1023 859-115
54F784	**Fairchild**	**54F784**	★ 1026 843-22
54F821	**Fairchild**	**54F821**	★ 1022 867-69
54F822	**Fairchild**	**54F822**	★ 1022
54F823	**Fairchild**	**54F823**	★ 1022 867-61
54F825	**Fairchild**	**54F825**	★ 1022 867-55
54F826	**Fairchild**	**54F826**	★ 1022
54F827	**Fairchild**	**54F827**	★ 1024 857-70
54F828	**Fairchild**	**54F828**	★ 1024 858-70
54F841	**Fairchild**	**54F841**	★ 1022 876-120
54F843	**Fairchild**	**54F843**	★ 1022 876-100
54F845	**Fairchild**	**54F845**	★ 1022 876-82
54F85	**Fairchild**	**54F85**	★ 1026 854-72
54F86	**Fairchild**	**54F86**	★ 610 ★ 1021 874-108
	Motorola	**MC54F86**	★ 1123 874-110
	Signetics	54F86	874-112
54FCT138	IDT	IDT54FCT138	818-4
54FCT139	IDT	IDT54FCT139	817-97
54FCT182	IDT	IDT54FCT182	806-83
54FCT240	IDT	IDT54FCT240	839-69
54FCT244	IDT	IDT54FCT244	839-144
54FCT245	IDT	IDT54FCT245	841-113
54FCT273	IDT	IDT54FCT273	821-54
54FCT299	IDT	IDT54FCT299	836-144
54FCT373	IDT	IDT54FCT373	829-114
54FCT374	IDT	IDT54FCT374	822-53
54FCT377	IDT	IDT54FCT377	821-101
54FCT521	IDT	IDT54FCT521	821-102
54FCT533	IDT	IDT54FCT533	830-40
54FCT534	IDT	IDT54FCT534	821-140
54FCT640	IDT	IDT54FCT640	841-32
54FCT645	IDT	IDT54FCT645	841-114
54GHC597	Motorola	MC54GHC597	3855-65
54H00	Fairchild	54H00	871-17
	National	DM54H00	871-21
54H01	Fairchild	54H01	871-163
	National	DM54H01	871-165
54H04	Fairchild	54H04	857-108
	National	DM54H04	857-110
54H05	Fairchild	54H05	857-155
54H08	Fairchild	54H08	869-102
	National	DM54H08	869-106
54H09	Fairchild	54H09	869-144
54H10	Fairchild	54H10	870-135
	National	DM54H10	870-137
54H101	Fairchild	54H101	867-99
54H102	Fairchild	54H102	867-97
54H103	Fairchild	54H103	868-75
54H106	Fairchild	54H106	868-86
	National	DM54H106	868-88
54H108	Fairchild	54H108	868-43
54H11	Fairchild	54H11	869-20
	National	DM54H11	869-22
54H183	Fairchild	54H183	855-1
54H20	Fairchild	54H20	870-7
	National	DM54H20	870-9
54H21	Fairchild	54H21	868-154
	National	DM54H21	868-156
54H22	Fairchild	54H22	870-86
54H30	Fairchild	54H30	872-20
	National	DM54H30	872-22
54H40	Fairchild	54H40	870-51
	National	DM54H40	870-54
54H50	Fairchild	54H50	872-124
	National	DM54H50	872-126
54H51	Fairchild	54H51	872-85
	National	DM54H51	872-87
54H52	Fairchild	54H52	872-72
54H53	Fairchild	54H53	872-152
54H54	Fairchild	54H54	872-149
54H55	Fairchild	54H55	872-146
54H60	Fairchild	54H60	887-132
54H61	Fairchild	54H61	887-135
54H62	Fairchild	54H62	888-53
54H71	Fairchild	54H71	867-95
54H72	Fairchild	54H72	867-88
54H73	Fairchild	54H73	867-169
54H74	Fairchild	54H74	864-230
54H76	Fairchild	54H76	868-31
54H78	Fairchild	54H78	867-141
54H87	Fairchild	54H87	888-103
	Motorola	MC54H87	888-105
54HC00	Fairchild	54HC00	825-49
	Motorola	**MC54HC00**	★ 1122 825-54
	National	MM54HC00	825-56
	RCA	**CD54HC00**	★ 1149 825-58
	SSS	SS54HC00	825-64
	TI	**SN54HC00**	★ 714 825-67
54HC02	Fairchild	54HC02	827-118
	Motorola	**MC54HC02**	★ 1122 827-123
	National	MM54HC02	827-127
	RCA	**CD54HC02**	★ 1149 827-130
	SSS	SS54HC02	827-136
	TI	**SN54HC02**	★ 714 827-138
54HC03	**Motorola**	**MC54HC03**	★ 1122 825-129
	National	MM54HC03	825-131
	RCA	**CD54HC03**	★ 1149 825-120
	TI	**SN54HC03**	★ 714 825-134
54HC04	**Motorola**	**MC54HC04**	★ 1124 811-4
	National	MM54HC04	811-8
	RCA	**CD54HC04**	★ 1149 811-10
	SSS	SS54HC04	811-18
	TI	**SN54HC04**	★ 714 811-20
54HC05	Motorola	MC54HC05	811-5
	TI	**SN54HC05**	★ 714 811-21
54HC07	Fairchild	54HC07	808-145
54HC08	Fairchild	54HC08	824-52
	Motorola	**MC54HC08**	★ 1122 824-57
	National	MM54HC08	824-59
	RCA	**CD54HC08**	★ 1149 824-62
	SSS	SS54HC08	824-68
	TI	**SN54HC08**	★ 714 824-70
54HC09	**TI**	**SN54HC09**	★ 714 824-106
54HC10	Fairchild	54HC10	824-178
	Motorola	**MC54HC10**	★ 1122 824-183
	National	MM54HC10	824-185
	RCA	**CD54HC10**	★ 1149 824-190
	SSS	SS54HC10	825-2
	TI	**SN54HC10**	★ 714 825-4
54HC107	**Motorola**	**MC54HC107**	★ 1126 823-117
	National	MM54HC107	823-121
	RCA	**CD54HC107**	★ 1149 823-126
	TI	**SN54HC107**	★ 714 823-136
54HC109	Fairchild	54HC109	822-176
	Motorola	**MC54HC109**	★ 1126 822-184
	National	MM54HC109	822-188
	RCA	**CD54HC109**	★ 1149 823-6
	TI	**SN54HC109**	★ 714 823-15
54HC11	**Motorola**	**MC54HC11**	★ 1122 824-5
	National	MM54HC11	824-7
	RCA	**CD54HC11**	★ 1149 824-10
	TI	**SN54HC11**	★ 714 824-16
54HC112	Fairchild	54HC112	823-71
	Motorola	**MC54HC112**	★ 1126 823-76
	National	MM54HC112	823-78
	RCA	**CD54HC112**	★ 1149 823-81
	TI	**SN54HC112**	★ 714 823-87
54HC113	**Motorola**	**MC54HC113**	★ 1126 823-59
	National	MM54HC113	823-61
	TI	**SN54HC113**	★ 714 823-65
54HC114	**TI**	**SN54HC114**	★ 714 823-103
54HC123	**Motorola**	**MC54HC123A**	★ 1131 834-68
	National	MM54HC123	834-70
		MM54HC123A	834-71
	RCA	**CD54HC123**	★ 1150 834-75
54HC125	Fairchild	54HC125	808-124
	Motorola	**MC54HC125**	★ 1124 808-79
	National	MM54HC125	808-129
	RCA	**CD54HC125**	★ 1149 808-131
	TI	**SN54HC125**	★ 714 808-89
54HC126	**Motorola**	**MC54HC126**	★ 1124 808-80
	National	MM54HC126	808-140
	RCA	**CD54HC126**	★ 1149 808-83
	TI	**SN54HC126**	★ 714 838-127
54HC132	Fairchild	54HC132	838-141
	Motorola	**MC54HC132**	★ 1125 838-146
	National	MM54HC132	838-148
	RCA	**CD54HC132**	★ 1149 838-150
54HC133	Fairchild	54HC133	825-186
	Motorola	**MC54HC133**	★ 1122 825-190
	National	MM54HC133	825-192
	TI	**SN54HC133**	★ 714 825-197
54HC137	Motorola	MC54HC137	818-102
	National	MM54HC137	818-106
	RCA	**CD54HC137**	★ 1150 818-110
	SSS	SS54HC137	818-119
54HC137	**TI**	**SN54HC137**	★ 714 818-121
54HC138	Fairchild	54HC138	818-6
	Motorola	**MC54HC138**	★ 1130 818-12
	National	MM54HC138	818-14
	RCA	**CD54HC138**	★ 1150 818-17
	SSS	SS54HC138	818-30
	TI	**SN54HC138**	★ 714 818-34
54HC139	Fairchild	54HC139	817-100
	Motorola	**MC54HC139**	★ 1130 817-106
	National	MM54HC139	817-110
	RCA	**CD54HC139**	★ 1150 817-113
	SSS	SS54HC139	817-121
	TI	**SN54HC139**	★ 714 817-125
54HC14	Fairchild	54HC14	811-80
	Motorola	**MC54HC14**	★ 1125 839-19
	National	MM54HC14	839-53
	RCA	**CD54HC14**	★ 1149 839-22
	TI	**SN54HC14**	★ 714 839-28
54HC147	Fairchild	54HC147	833-149 833-153
	Motorola	**MC54HC147**	★ 1131 819-44
	National	MM54HC147	833-151 833-155
	RCA	**CD54HC147**	★ 1150 819-46
	SSS	SS54HC147	819-51
54HC149	National	MM54HC149	817-169
54HC151	Fairchild	54HC151	833-28
	Motorola	**MC54HC151**	★ 1129 833-33
	National	MM54HC151	833-35
	RCA	**CD54HC151**	★ 1150 833-38
	TI	**SN54HC151**	★ 714 833-44
54HC152	**TI**	**SN54HC152**	★ 714 833-54
54HC153	Fairchild	54HC153	833-77
	Motorola	**MC54HC153**	★ 1129 831-140
	National	MM54HC153	832-20
	RCA	**CD54HC153**	★ 1150 832-22
	TI	**SN54HC153**	★ 714 831-144
54HC154	Fairchild	54HC154	819-16
	Motorola	**MC54HC154**	★ 1130 819-22
	National	MM54HC154	819-24
	RCA	**CD54HC154**	★ 1150 819-27
54HC155	Motorola	MC54HC155	817-87
54HC157	**Motorola**	**MC54HC157**	★ 1129 832-64
	National	MM54HC157	832-66
	RCA	**CD54HC157**	★ 1150 832-71
	SSS	SS54HC157	832-77
	TI	**SN54HC157**	★ 714 832-79
54HC158	**Motorola**	**MC54HC158**	★ 1129 832-104
	National	MM54HC158	832-67
	RCA	**CD54HC158**	★ 1150

(Continued)

¶ Indicates page number in Application Note Directory.
★ Indicates additional data is provided on the page noted.

Base Number	Source	Device	Page-Line
54HC158			
	RCA	CD54HC158	832-107
	TI	**SN54HC158**	★ **714** 832-114
54HC160			
	Fairchild	54HC160	814-166
	Motorola	**MC54HC160**	★ **1127** 814-170
	National	MM54HC160	814-172
	RCA	**CD54HC160**	★ **1150** 814-175
	TI	**SN54HC160**	★ **714** 814-180
54HC161			
	Motorola	**MC54HC161**	★ **1127** 811-180
	National	MM54HC161	811-182
	RCA	**CD54HC161**	★ **1150** 811-185
	SSS	SS54HC161	811-192
	TI	**SN54HC161**	★ **714** 812-2
54HC162			
	Fairchild	54HC162	814-117
	Motorola	**MC54HC162**	★ **1127** 814-121
	National	MM54HC162	814-123
	RCA	**CD54HC162**	★ **1150** 814-125
	TI	**SN54HC162**	★ **714** 814-131
54HC163			
	Fairchild	54HC163	811-121
	Motorola	**MC54HC163**	★ **1127** 811-126
	National	MM54HC163	811-128
	RCA	**CD54HC163**	★ **1150** 811-131
	SSS	SS54HC163	811-137
	TI	**SN54HC163**	★ **714** 811-139
54HC164			
	Fairchild	54HC164	836-35
	Motorola	**MC54HC164**	★ **1128** 836-40 3855-69
	National	MM54HC164	836-42
	RCA	**CD54HC164**	★ **1149** 836-44
	TI	**SN54HC164**	★ **714** 836-50
54HC165			
	Fairchild	54HC165	835-181
	Motorola	**MC54HC165**	★ **1128** 835-186 3855-73
	National	MM54HC165	835-188
	RCA	**CD54HC165**	★ **1149** 836-2
	TI	**SN54HC165**	★ **714** 836-9
54HC166			
	Motorola	MC54HC166	836-72
	National	MM54HC166	836-74
	RCA	**CD54HC166**	★ **1149** 836-76
	TI	**SN54HC166**	★ **714** 836-79
54HC168			
	Motorola	MC54HC168	812-49
54HC169			
	Motorola	MC54HC169	813-27
	National	MM54HC169	813-29
54HC173			
	Fairchild	54HC173	820-134
	Motorola	**MC54HC173**	★ **1126** 820-139
	National	MM54HC173	820-141
	RCA	**CD54HC173**	★ **1149** 820-143
	TI	**SN54HC173**	★ **714** 820-149
54HC174			
	Motorola	**MC54HC174**	★ **1126** 821-4
	National	MM54HC174	821-6
	RCA	**CD54HC174**	★ **1149** (Continued)
54HC174			
	RCA	CD54HC174	821-9
	SSS	SS54HC174	821-15
	TI	**SN54HC174**	★ **714** 821-17
54HC175			
	Fairchild	54HC175	820-89
	Motorola	**MC54HC175**	★ **1126** 820-94
	National	MM54HC175	820-96
	RCA	**CD54HC175**	★ **1149** 820-98
	SSS	SS54HC175	820-104
	TI	**SN54HC175**	★ **714** 820-106
54HC180			
	TI	**SN54HC180**	★ **714** 842-91
54HC181			
	Motorola	**MC54HC181**	★ **1132** 806-160
	National	MM54HC181	806-162
	RCA	**CD54HC181**	★ **1150** 806-164
54HC182			
	National	MM54HC182	807-11
	RCA	**CD54HC182**	★ **1150** 806-87
54HC190			
	Motorola	MC54HC190	815-128
	National	MM54HC190	815-130
	RCA	**CD54HC190**	★ **1150** 815-132
	TI	**SN54HC190**	★ **714** 815-135
54HC191			
	Motorola	MC54HC191	812-50
	National	MM54HC191	812-55
	RCA	**CD54HC191**	★ **1150** 812-60
	TI	**SN54HC191**	★ **714** 813-20
54HC192			
	Fairchild	54HC192	815-29
	Motorola	**MC54HC192**	★ **1127** 815-33
	National	MM54HC192	815-35
	RCA	**CD54HC192**	★ **1150** 815-38
	SSS	SS54HC192	815-43
	TI	**SN54HC192**	★ **714** 815-45
54HC193			
	Fairchild	54HC193	812-40
	Motorola	**MC54HC193**	★ **1127** 812-51
	National	MM54HC193	812-56
	RCA	**CD54HC193**	★ **1150** 812-61
	TI	**SN54HC193**	★ **714** 813-21
54HC194			
	Motorola	**MC54HC194**	★ **1128** 835-31 3854-24
	National	MM54HC194	835-33
	RCA	**CD54HC194**	★ **1149** 835-35
	TI	**SN54HC194**	★ **714** 835-41
54HC195			
	Fairchild	54HC195	835-91
	Motorola	**MC54HC195**	★ **1128** 835-96 3854-25
	National	MM54HC195	835-98
	RCA	**CD54HC195**	★ **1149** 835-100
	TI	**SN54HC195**	★ **714** 835-106
54HC20	Fairchild	54HC20	824-118
	Motorola	**MC54HC20**	★ **1122** 824-124
	National	MM54HC20	824-186
	RCA	**CD54HC20**	★ **1149** 824-127 (Continued)
54HC20	**TI**	**SN54HC20**	★ **714** 824-133
54HC21	**RCA**	**CD54HC21**	★ **1149** 823-164
	TI	**SN54HC21**	★ **714** 823-167
54HC221			
	Fairchild	54HC221	834-4
	Motorola	**MC54HC221A**	★ **1131** 834-13
	National	MM54HC221A	834-19
	RCA	**CD54HC221**	★ **1150** 834-26
54HC237			
	Motorola	MC54HC237	818-103
	National	MM54HC237	818-107
	RCA	**CD54HC237**	★ **1150** 818-111
	SSS	SS54HC237	818-84
	TI	**SN54HC237**	★ **714** 818-86
54HC238			
	RCA	**CD54HC238**	★ **1150** 818-18
	SSS	SS54HC238	818-31
	TI	**SN54HC238**	★ **714** 818-87
54HC239			
	Motorola	MC54HC239	817-107
	SSS	SS54HC239	817-122
54HC240			
	Fairchild	54HC240	839-71
	Motorola	**MC54HC240**	★ **1124** 839-77 ¶ 373-7
	National	MM54HC240	839-79
	RCA	**CD54HC240**	★ **1149** 839-82
	Signetics	54HC240	839-88
	SSS	SS54HC240	839-90
	TI	**SN54HC240**	★ **714** 839-92
54HC241			
	Fairchild	54HC241	839-147
	Motorola	**MC54HC241**	★ **1124** 839-152 ¶ 373-7
	RCA	**CD54HC241**	★ **1149** 839-156
	Signetics	54HC241	839-161
	SSS	SS54HC241	839-163
	TI	**SN54HC241**	★ **714** 840-51
54HC242			
	Fairchild	54HC242	838-81
	Motorola	**MC54HC242**	★ **1124** 838-85 ¶ 373-7
	National	MM54HC242	838-87
	RCA	**CD54HC242**	★ **1149** 838-90
	SSS	SS54HC242	838-96
	TI	**SN54HC242**	★ **714** 838-100
54HC243			
	Fairchild	54HC243	838-117
	Motorola	**MC54HC243**	★ **1124** 838-120 ¶ 373-7
	National	MM54HC243	838-71
	RCA	**CD54HC243**	★ **1149** 838-123
	SSS	SS54HC243	838-97
	TI	**SN54HC243**	★ **714** 838-74
54HC244			
	Fairchild	54HC244	840-68
	Motorola	**MC54HC244**	★ **1124** 840-72 ¶ 373-7
	National	MM54HC244	840-74
	RCA	**CD54HC244**	★ **1149** 840-77
	Signetics	54HC244	840-83
	SSS	SS54HC244	840-85 (Continued)
54HC244			
	TI	**SN54HC244**	★ **714** 839-167
54HC245			
	Fairchild	54HC245	841-117
	Motorola	**MC54HC245**	★ **1124** 841-127 ¶ 373-7
	National	MM54HC245	836-169
	RCA	**CD54HC245**	★ **1149** 841-130
	SSS	SS54HC245	841-136
	TI	**SN54HC245**	★ **714** 841-138
54HC251			
	Fairchild	54HC251	833-78
	Motorola	**MC54HC251**	★ **1129** 833-107
	National	MM54HC251	833-75
	RCA	**CD54HC251**	★ **1150** 833-113
	SSS	SS54HC251	833-125
	TI	**SN54HC251**	★ **714** 833-88
54HC253			
	Fairchild	54HC253	832-11
	Motorola	**MC54HC253**	★ **1129** 832-37
	National	MM54HC253	832-39
	RCA	**CD54HC253**	★ **1150** 832-41
	SSS	SS54HC253	832-45
	TI	**SN54HC253**	★ **714** 832-15
54HC257			
	Fairchild	54HC257	832-135
	Motorola	**MC54HC257**	★ **1129** 832-139
	National	MM54HC257	832-141
	RCA	**CD54HC257**	★ **1150** 832-143
	TI	**SN54HC257**	★ **714** 832-149
54HC258			
	Motorola	MC54HC258	832-169
	RCA	**CD54HC258**	★ **1150** 832-171
	TI	**SN54HC258**	★ **714** 832-175
54HC259			
	Fairchild	54HC259	830-170
	Motorola	**MC54HC259**	★ **1126** 830-175
	National	MM54HC259	830-177
	RCA	**CD54HC259**	★ **1150** 830-181
	SSS	SS54HC259	830-187
	TI	**SN54HC259**	★ **714** 830-189
54HC266			
	Motorola	**MC54HC266**	★ **1123** 828-96
	National	MM54HC266	826-88
	RCA	CD54HC266	828-99
	TI	**SN54HC266**	★ **714** 828-107
54HC27	Fairchild	54HC27	827-57
	Motorola	**MC54HC27**	★ **1122** 827-62
	National	MM54HC27	827-64
	RCA	**CD54HC27**	★ **1149** 827-67
	SSS	SS54HC27	827-73
	TI	**SN54HC27**	★ **714** 827-75
54HC273			
	Fairchild	54HC273	821-56
	Motorola	**MC54HC273**	★ **1126** 821-63
	National	MM54HC273	821-65
	RCA	**CD54HC273**	★ **1149** 821-68
	SSS	SS54HC273	821-73
	TI	**SN54HC273**	★ **714** 821-75

Arranged alphanumerically from left to right.

PART NUMBER INDEX

Base Number	Source	Device	Page-Line
54HC280	Fairchild	54HC280	808-34
	Motorola	**MC54HC280**	**★ 1132** 808-37
	National	MM54HC280	808-39
	RCA	**CD54HC280**	**★ 1150** 808-41
	TI	**SN54HC280**	**★ 714** 842-92
54HC283	Fairchild	54HC283	806-35
	Motorola	**MC54HC283**	**★ 1132** 806-41
	National	MM54HC283	806-43
	RCA	**CD54HC283**	**★ 1150** 806-45
54HC292	Motorola	MC54HC292	837-134
	National	MM54HC292	837-138
54HC294	Motorola	MC54HC294	837-135
	National	MM54HC294	837-139
54HC297	**RCA**	**CD54HC297**	**★ 1150** 3375-14
	Signetics	54HC297	3375-18
54HC298	Motorola	MC54HC298	833-4
	National	MM54HC298	833-6
	TI	**SN54HC298**	**★ 714** 833-10
54HC299	Fairchild	54HC299	836-146
	Motorola	**MC54HC299**	**★ 1129** 836-152
	National	MM54HC299	836-154
	RCA	**CD54HC299**	**★ 1149** 836-156
54HC30	Fairchild	54HC30	825-146
	Motorola	**MC54HC30**	**★ 1122** 825-151
	National	MM54HC30	825-153
	RCA	**CD54HC30**	**★ 1149** 825-156
	TI	**SN54HC30**	**★ 714** 825-162
54HC32	Fairchild	54HC32	826-128
	Motorola	**MC54HC32**	**★ 1122** 826-133
	National	MM54HC32	826-135
	RCA	**CD54HC32**	**★ 1149** 826-138
	TI	**SN54HC32**	**★ 714** 826-144
54HC323	National	MM54HC323	836-170
54HC352	**TI**	**SN54HC352**	**★ 714** 832-31
54HC353	**TI**	**SN54HC353**	**★ 714** 832-54
54HC354	**Motorola**	**MC54HC354**	**★ 1130** 833-108
	National	MM54HC354	833-98
	RCA	**CD54HC354**	**★ 1150** 833-114
	SSS	SS54HC354	833-126
54HC356	**Motorola**	**MC54HC356**	**★ 1130** 833-109
	National	MM54HC356	833-99
	RCA	**CD54HC356**	**★ 1150** 833-115
54HC36	Motorola	MC54HC36	827-124
	TI	**SN54HC36**	**★ 714** 827-139
54HC365	Fairchild	54HC365	809-113
	Motorola	**MC54HC365**	**★ 1124** 809-122
	National	MM54HC365	809-126
	RCA	**CD54HC365**	**★ 1149** 809-132
	SSS	SS54HC365	809-142 (Continued)
54HC365	**TI**	**SN54HC365**	**★ 714** 809-144
54HC366	Fairchild	54HC366	809-183
	Motorola	**MC54HC366**	**★ 1124** 809-191
	National	MM54HC366	809-195
	RCA	**CD54HC366**	**★ 1149** 810-6
	TI	**SN54HC366**	**★ 714** 810-15
54HC367	Fairchild	54HC367	809-114
	Motorola	**MC54HC367**	**★ 1124** 809-123
	National	MM54HC367	809-127
	RCA	**CD54HC367**	**★ 1149** 809-133
	TI	**SN54HC367**	**★ 714** 839-5
54HC368	Fairchild	54HC368	809-184
	Motorola	**MC54HC368**	**★ 1124** 809-192
	National	MM54HC368	810-1
	RCA	**CD54HC368**	**★ 1149** 810-7
	TI	**SN54HC368**	**★ 714** 810-16
54HC373	Fairchild	54HC373	829-116
	Motorola	**MC54HC373**	**★ 1126** 829-125
	National	MM54HC373	829-129
	RCA	**CD54HC373**	**★ 1150** 829-134
	SSS	SS54HC373	829-147
	TI	**SN54HC373**	**★ 714** 829-151
54HC374	Fairchild	54HC374	822-55
	Motorola	**MC54HC374**	**★ 1126** 822-65
	National	MM54HC374	822-69
	RCA	**CD54HC374**	**★ 1149** 822-74
	SSS	SS54HC374	822-87
	TI	**SN54HC374**	**★ 714** 822-91
54HC377	**RCA**	**CD54HC377**	**★ 1149** 821-109
	SSS	SS54HC377	821-112
	TI	**SN54HC377**	**★ 714** 821-114
54HC378	**TI**	**SN54HC378**	**★ 714** 821-48
54HC379	**TI**	**SN54HC379**	**★ 714** 820-129
54HC384	RCA	CD54HC384	807-89
54HC386	Motorola	MC54HC386	828-30
	TI	**SN54HC386**	**★ 714** 828-43
54HC390	Fairchild	54HC390	815-145
	Motorola	**MC54HC390**	**★ 1127** 815-165
	National	MM54HC390	815-149
	RCA	**CD54HC390**	**★ 1150** 815-152
	TI	**SN54HC390**	**★ 714** 815-167
54HC393	Fairchild	54HC393	812-173
	Motorola	**MC54HC393**	**★ 1127** 812-144
	National	MM54HC393	812-177
	RCA	**CD54HC393**	**★ 1150** 812-180
	TI	**SN54HC393**	**★ 714** 812-149
54HC4002	**Motorola**	**MC54HC4002**	**★ 1123** 827-10
	National	MM54HC4002	827-12
	RCA	**CD54HC4002**	**★ 1149** 827-15
	TI	**SN54HC4002**	**★ 714** 827-22
54HC40102	**RCA**	**CD54HC40102**	**★ 1150** 815-86
54HC40103	**RCA**	**CD54HC40103**	**★ 1150** 813-72
54HC40104	**RCA**	**CD54HC40104**	**★ 1149** 835-57
54HC40105	**RCA**	**CD54HC40105**	**★ 1149** 831-47
54HC4015	Motorola	MC54HC4015	834-150
	RCA	**CD54HC4015**	**★ 1149** 834-152
54HC4016	**Motorola**	**MC54HC4016**	**★ 1130.** 2824-42
	National	MM54HC4016	2824-48
	RCA	**CD54HC4016**	**★ 1149** 2824-57
54HC4017	Fairchild	54HC4017	814-69
	Motorola	**MC54HC4017**	**★ 1128** 814-73
	National	MM54HC4017	814-75
	RCA	**CD54HC4017**	**★ 1150** 814-77
54HC4018	National	MM54HC4018	827-192
54HC4020	Fairchild	54HC4020	813-163
	Motorola	**MC54HC4020**	**★ 1128** 813-167
	National	MM54HC4020	813-169
	RCA	**CD54HC4020**	**★ 1150** 813-171
	TI	**SN54HC4020**	**★ 714** 813-176
54HC4024	Motorola	MC54HC4024	813-36
	National	MM54HC4024	813-38
	RCA	**CD54HC4024**	**★ 1150** 813-40
	TI	**SN54HC4024**	**★ 714** 813-44
54HC4040	Fairchild	54HC4040	813-120
	Motorola	**MC54HC4040**	**★ 1128** 813-124
	National	MM54HC4040	813-126
	RCA	**CD54HC4040**	**★ 1150** 813-129
	TI	**SN54HC4040**	**★ 714** 813-134
54HC4046	Fairchild	54HC4046	833-164
	Motorola	MC54HC4046A	837-102 3375-48
	National	MM54HC4046	837-104
	RCA	**CD54HC4046**	**★ 1150** 837-106
54HC4047	Fairchild	54HC4047	833-165
54HC4049	Fairchild	54HC4049	809-19
	Motorola	**MC54HC4049**	**★ 1124** 809-21
	National	MM54HC4049	809-23
	RCA	CD54HC4049	809-26
54HC4050	Fairchild	54HC4050	809-63
	Motorola	**MC54HC4050**	**★ 1124** 809-65
	National	MM54HC4050	809-67
	RCA	CD54HC4050	809-70
54HC4051	Fairchild	54HC4051	842-85
	Motorola	**MC54HC4051**	**★ 1130** 2830-111
	National	MM54HC4051	2830-117
	RCA	**CD54HC4051**	**★ 1150** 2830-124
54HC4052	Fairchild	54HC4052	838-56
	Motorola	**MC54HC4052**	**★ 1130** 2830-11
	National	MM54HC4052	2830-17
	RCA	**CD54HC4052**	**★ 1150** 2830-25
54HC4053	Fairchild	54HC4053	838-62
	Motorola	**MC54HC4053**	**★ 1130** 2826-43
	RCA	**CD54HC4053**	**★ 1150** 2826-53
54HC4059	**RCA**	**CD54HC4059**	**★ 1150** 816-53
54HC4060	**Motorola**	**MC54HC4060**	**★ 1128** 814-13
	National	MM54HC4060	814-15
	RCA	**CD54HC4060**	**★ 1150** 814-17
	TI	**SN54HC4060**	**★ 714** 814-21
54HC4066	**Motorola**	**MC54HC4066**	**★ 1130** 2824-6
	National	MM54HC4066	2824-10
	RCA	**CD54HC4066**	**★ 1149**
54HC4067	**RCA**	**CD54HC4067**	**★ 1150** 2831-62
54HC4075	**Motorola**	**MC54HC4075**	**★ 1122** 826-86
	National	MM54HC4075	826-89
	RCA	**CD54HC4075**	**★ 1149** 826-93
	TI	**SN54HC4075**	**★ 714** 826-99
54HC4078	**Motorola**	**MC54HC4078**	**★ 1123** 827-190
	National	MM54HC4078	827-193
	TI	**SN54HC4078A**	**★ 714** 827-200
54HC4094	**RCA**	**CD54HC4094**	**★ 1149** 835-158
54HC42	Fairchild	54HC42	817-5
	Motorola	**MC54HC42**	**★ 1130** 817-11
	National	MM54HC42	817-13
	RCA	**CD54HC42**	**★ 1150** 817-16
	TI	**SN54HC42**	**★ 714** 817-22
54HC423	Motorola	MC54HC423A	834-14
	National	MM54HC423A	834-20
	RCA	**CD54HC423**	**★ 1150** 834-27
54HC4301	National	MM54HC4301	830-135
54HC4302	National	MM54HC4302	830-133
54HC4303	National	MM54HC4303	821-98
54HC4304	National	MM54HC4304	821-96
54HC4305	National	MM54HC4305	810-40
54HC4316	Motorola	MC54HC4316	2824-43
	National	MM54HC4316	2824-49
	RCA	**CD54HC4316**	**★ 1149** 2827-97
54HC4351	Motorola	MC54HC4351	2830-112
	National	MM54HC4351	2830-118 (Continued)

¶ Indicates page number in Application Note Directory.
★ Indicates additional data is provided on the page noted.

Base Number	Source	Device	Page-Line
54HC4351			
	RCA	**CD54HC4351**	★ **1150**
			2830-125
54HC4352			
	Motorola	MC54HC4352	2830-12
	National	MM54HC4352	2830-18
	RCA	**CD54HC4352**	★ **1150**
			2830-26
54HC4353			
	Motorola	MC54HC4353	2826-44
	RCA	**CD54HC4353**	★ **1150**
			2826-54
54HC4510			
	Fairchild	54HC4510	815-118
	RCA	**CD54HC4510**	★ **1150**
			815-120
54HC4511			
	Motorola	**MC54HC4511**	★ **1130**
			819-131
	National	MM54HC4511	819-133
	RCA	**CD54HC4511**	★ **1150**
			819-137
54HC4512			
	Fairchild	54HC4512	833-79
54HC4514			
	Fairchild	54HC4514	819-17
	Motorola	**MC54HC4514**	★ **1130**
			818-157
	National	MM54HC4514	818-161
	RCA	**CD54HC4514**	★ **1150**
			818-163
54HC4515			
	Motorola	MC54HC4515	818-158
	RCA	**CD54HC4515**	★ **1150**
			818-164
54HC4516			
	Fairchild	54HC4516	812-41
	RCA	**CD54HC4516**	★ **1150**
			812-62
54HC4518			
	Motorola	MC54HC4518	815-170
	RCA	**CD54HC4518**	★ **1150**
			815-173
54HC4520			
	RCA	**CD54HC4520**	★ **1150**
			812-136
54HC4538			
	Fairchild	54HC4538	834-5
	Motorola	**MC54HC4538**	★ **1131**
			834-15
	National	MM54HC4538	834-21
	RCA	**CD54HC4538**	★ **1150**
			834-28
54HC4543			
	Motorola	**MC54HC4543**	★ **1130**
			819-85
			2876-4
	National	MM54HC4543	819-134
	RCA	**CD54HC4543**	★ **1150**
			819-87
54HC4703			
	Fairchild	54HC4703	837-70
54HC4724			
	TI	**SN54HC4724**	★ **714**
			830-190
54HC490			
	TI	**SN54HC490**	★ **714**
			815-156
54HC51	Motorola	MC54HC51	826-48
	National	MM54HC51	826-50
	TI	**SN54HC51**	★ **714**
			826-54
54HC521			
	National	MM54HC521	807-35
54HC533			
	Fairchild	54HC533	830-42
	Motorola	**MC54HC533**	★ **1126**
			830-52
	National	MM54HC533	830-56
	RCA	**CD54HC533**	★ **1150**
			830-60
	SSS	SS54HC533	830-72
	TI	**SN54HC533**	★ **714**
			830-76
54HC534			
	Fairchild	54HC534	821-142
	Motorola	**MC54HC534**	★ **1127**
			(Continued)
54HC534			
	Motorola	MC54HC534	821-152
	National	MM54HC534	821-156
	RCA	**CD54HC534**	★ **1149**
			821-160
	SSS	SS54HC534	821-172
	TI	**SN54HC534**	★ **714**
			821-176
54HC540			
	Motorola	**MC54HC540**	★ **1125**
			810-58
	RCA	**CD54HC540**	★ **1149**
			810-62
	SSS	SS54HC540	810-74
	TI	**SN54HC540**	★ **714**
			810-78
54HC541			
	Motorola	**MC54HC541**	★ **1125**
			810-59
	RCA	**CD54HC541**	★ **1149**
			810-63
	SSS	SS54HC541	810-75
	TI	**SN54HC541**	★ **714**
			841-139
54HC543			
	Fairchild	54HC543	842-17
	National	MM54HC543	842-21
54HC544			
	Fairchild	54HC544	842-18
	National	MM54HC544	842-22
54HC550			
	Fairchild	54HC550	842-35
	Motorola	MC54HC550	837-98
	National	MM54HC550	842-40
54HC551			
	Fairchild	54HC551	842-36
	Motorola	MC54HC551	837-94
	National	MM54HC551	842-41
54HC563			
	Fairchild	54HC563	830-43
	Motorola	**MC54HC563**	★ **1126**
			830-53
	National	MM54HC563	830-57
	RCA	**CD54HC563**	★ **1150**
			830-61
	SSS	SS54HC563	830-73
	TI	**SN54HC563**	★ **714**
			830-77
54HC564			
	Fairchild	54HC564	821-143
	Motorola	**MC54HC564**	★ **1127**
			821-153
	National	MM54HC564	821-157
	RCA	**CD54HC564**	★ **1149**
			821-161
	SSS	SS54HC564	821-173
54HC568			
	Fairchild	54HC568	815-142
54HC569			
	Fairchild	54HC569	812-42
54HC573			
	Fairchild	54HC573	829-117
	Motorola	**MC54HC573**	★ **1126**
			829-126
	National	MM54HC573	829-130
	RCA	**CD54HC573**	★ **1150**
			829-135
	SSS	SS54HC573	829-148
	TI	**SN54HC573**	★ **714**
			829-152
54HC574			
	Fairchild	54HC574	822-56
	Motorola	**MC54HC574**	★ **1127**
			822-66
	National	MM54HC574	822-70
	RCA	**CD54HC574**	★ **1149**
			822-75
	SSS	SS54HC574	822-88
	TI	**SN54HC574**	★ **714**
			822-92
54HC58	Motorola	MC54HC58	826-22
	National	MM54HC58	826-24
54HC583			
	RCA	**CD54HC583**	★ **1150**
			806-1
54HC589			
	Motorola	MC54HC589	836-114
			3855-66
	National	MM54HC589	836-116
54HC590			
	Motorola	MC54HC590	813-106
	National	MM54HC590	813-108
	TI	**SN54HC590**	★ **714**
			813-110
54HC592			
	Motorola	MC54HC592	813-98
	National	MM54HC592	813-86
	TI	**SN54HC592**	★ **714**
			813-90
54HC593			
	Motorola	MC54HC593	813-99
	National	MM54HC593	813-87
	TI	**SN54HC593**	★ **714**
			813-91
54HC595			
	Motorola	MC54HC595	836-100
			3855-70
	National	MM54HC595	836-102
	TI	**SN54HC595**	★ **714**
			836-105
54HC597			
	Motorola	MC54HC597	836-92
	National	MM54HC597	836-22
	RCA	**CD54HC597**	★ **1149**
			836-24
	TI	**SN54HC597**	★ **714**
			836-95
54HC598			
	TI	**SN54HC598**	★ **714**
			836-27
54HC620			
	Motorola	MC54HC620	841-36
	TI	**SN54HC620**	★ **714**
			841-23
54HC623			
	Motorola	MC54HC623	841-37
	TI	**SN54HC623**	★ **714**
			841-140
54HC640			
	Fairchild	54HC640	841-6
	Motorola	**MC54HC640**	★ **1125**
			841-38
	RCA	**CD54HC640**	★ **1149**
			841-69
	SSS	SS54HC640	841-73
	TI	**SN54HC640**	★ **714**
			841-48
54HC643			
	Fairchild	54HC643	841-9
	Motorola	**MC54HC643**	★ **1125**
			841-39
	RCA	**CD54HC643**	★ **1149**
			841-190
	SSS	SS54HC643	842-2
	TI	**SN54HC643**	★ **714**
			841-75
54HC645			
	Fairchild	54HC645	840-93
	SSS	SS54HC645	840-95
	TI	**SN54HC645**	★ **714**
			841-141
54HC646			
	Fairchild	54HC646	840-152
	Motorola	**MC54HC646**	★ **1125**
			840-157
	National	MM54HC646	840-161
	RCA	**CD54HC646**	★ **1149**
			840-163
	SSS	SS54HC646	840-168
	TI	**SN54HC646**	★ **714**
			840-170
54HC648			
	Fairchild	54HC648	840-106
			842-48
	Motorola	**MC54HC648**	★ **1125**
			840-111
	National	MM54HC648	840-115
	RCA	**CD54HC648**	★ **1149**
			840-117
	SSS	SS54HC648	840-122
	TI	**SN54HC648**	★ **714**
			840-124
54HC651			
	Motorola	MC54HC651	840-112
	TI	**SN54HC651**	★ **714**
			840-125
54HC652			
	Motorola	MC54HC652	840-158
	TI	**SN54HC652**	★ **714**
			840-171
54HC658			
	Motorola	MC54HC658	837-86
54HC659			
	Motorola	MC54HC659	837-87
54HC664			
	Motorola	MC54HC664	841-12
54HC665			
	Motorola	MC54HC665	841-13
54HC670			
	RCA	**CD54HC670**	★ **1149**
			831-67
	TI	**SN54HC670**	★ **714**
			838-3
54HC682			
	TI	**SN54HC682**	★ **714**
			806-139
54HC684			
	TI	**SN54HC684**	★ **714**
			806-140
54HC688			
	Fairchild	54HC688	806-105
			806-127
	Motorola	**MC54HC688**	★ **1131**
			806-133
	National	MM54HC688	806-135
	RCA	**CD54HC688**	★ **1150**
			806-108
	TI	**SN54HC688**	★ **714**
			806-141
54HC7046			
	RCA	**CD54HC7046**	★ **1150**
			834-146
54HC7266			
	RCA	CD54HC7266	828-100
54HC73	**Motorola**	**MC54HC73**	★ **1126**
			823-118
	National	MM54HC73	823-122
	RCA	**CD54HC73**	★ **1149**
			823-127
54HC7373			
	Motorola	MC54HC7373	828-161
54HC74	Fairchild	54HC74	820-17
	Motorola	**MC54HC74**	★ **1126**
			820-22
	National	MM54HC74	820-24
	RCA	**CD54HC74**	★ **1149**
			820-27
	SSS	SS54HC74	820-33
	TI	**SN54HC74**	★ **714**
			820-35
54HC75	Fairchild	54HC75	830-137
	Motorola	**MC54HC75**	★ **1126**
			830-141
	National	MM54HC75	830-143
	RCA	**CD54HC75**	★ **1150**
			830-146
	SSS	SS54HC75	830-151
	TI	**SN54HC75**	★ **714**
			830-153
54HC7533			
	Motorola	MC54HC7533	828-162
54HC7563			
	Motorola	MC54HC7563	828-163
54HC7573			
	Motorola	MC54HC7573	828-164
54HC76	Fairchild	54HC76	822-177
	Motorola	**MC54HC76**	★ **1126**
			822-185
	National	MM54HC76	823-1
54HC77	National	MM54HC77	830-178
	TI	**SN54HC77**	★ **714**
			829-2
54HC7793			
	Motorola	MC54HC7793	829-97
54HC7873			
	Motorola	MC54HC7873	828-152
54HC793			
	Motorola	MC54HC793	830-163

Arranged alphanumerically from left to right.

PART NUMBER INDEX

Base Number	Source	Device	Page-Line
54HC85	Fairchild	54HC85	807-29
	Motorola	**MC54HC85**	★ **1131** 807-33
	National	MM54HC85	807-36
	RCA	**CD54HC85**	★ **1150** 807-40
54HC86	Fairchild	54HC86	828-24
	Motorola	**MC54HC86**	★ **1123** 828-31
	National	MM54HC86	828-34
	RCA	**CD54HC86**	★ **1149** 828-37
	TI	**SN54HC86**	★ **714** 828-44
54HC873	Motorola	MC54HC873	828-154
54HC9000	Motorola	MC54HC9000	838-24
54HC9014	Motorola	MC54HC9014	810-151
54HC9015	Motorola	MC54HC9015	808-73
54HC9034	Motorola	MC54HC9034	810-145
54HC9035	Motorola	MC54HC9035	808-67
54HC9114	Motorola	MC54HC9114	810-153
54HC9115	Motorola	MC54HC9115	808-75
54HC9134	Motorola	MC54HC9134	810-149
54HC9135	Motorola	MC54HC9135	808-71
54HC93	**RCA**	**CD54HC93**	★ **1150** 813-3
54HC9373	Motorola	MC54HC9373	828-159
54HC9533	Motorola	MC54HC9533	828-165
54HC9563	Motorola	MC54HC9563	828-166
54HC9573	Motorola	MC54HC9573	828-167
54HC9616	Motorola	MC54HC9616	3856-97
54HCT00	Motorola	MC54HCT00	825-72
	National	MM54HCT00	825-74
	RCA	**CD54HCT00**	★ **1149** 825-76
54HCT02	**RCA**	**CD54HCT02**	★ **1149** 827-146
	SSS	SS54HCT02	827-150
54HCT03	Motorola	MC54HCT03	825-138
	RCA	**CD54HCT03**	★ **1149** 825-124
54HCT04	Fairchild	54HCT04	811-26
	Motorola	MC54HCT04	811-31
	National	MM54HCT04	811-37
	RCA	**CD54HCT04**	★ **1149** 811-43
	SSS	SS54HCT04	811-49
54HCT05	Motorola	MC54HCT05	811-32
	National	MM54HCT05	811-38
54HCT07	Fairchild	54HCT07	808-149
54HCT08	**RCA**	**CD54HCT08**	★ **1149** 824-76
54HCT10	**RCA**	**CD54HCT10**	★ **1149** 825-9
	SSS	SS54HCT10	825-14
54HCT107	National	MM54HCT107	823-143
	RCA	**CD54HCT107**	★ **1149** 823-145
54HCT109	National	MM54HCT109	823-22
	RCA	**CD54HCT109**	★ **1149** 823-26
54HCT11	**RCA**	**CD54HCT11**	★ **1149** 824-21
54HCT112	National	MM54HCT112	823-91
	RCA	**CD54HCT112**	★ **1149** 823-93
54HCT123	**RCA**	**CD54HCT123**	★ **1150** 834-80
54HCT125	Motorola	MC54HCT125	808-94
	RCA	**CD54HCT125**	★ **1149** 808-137
54HCT126	Motorola	MC54HCT126	808-95
	RCA	**CD54HCT126**	★ **1149** 808-98
54HCT132	**RCA**	**CD54HCT132**	★ **1149** 838-158
54HCT137	CTI	54HCT137	818-126
	RCA	**CD54HCT137**	★ **1150** 818-134
	SSS	SS54HCT137	818-139
	Supertex	54HCT137	818-141
	TI	**SN54HCT137**	★ **714** 818-145
54HCT138	CTI	54HCT138	818-38
	Mitel	MD54HCT138R	818-44
	Motorola	MC54HCT138	818-47
	National	MM54HCT138	818-49
	RCA	**CD54HCT138**	★ **1150** 818-53
	SSS	SS54HCT138	818-60
	Supertex	54HCT138	818-64
	TI	**SN54HCT138**	★ **714** 818-68
54HCT139	CTI	54HCT139	817-130
	Mitel	MD54HCT139R	817-134
	National	MM54HCT139	817-136
	RCA	**CD54HCT139**	★ **1150** 817-141
	SSS	SS54HCT139	817-148
	Supertex	54HCT139	817-152
54HCT14	**RCA**	**CD54HCT14**	★ **1149** 839-33
54HCT147	**RCA**	**CD54HCT147**	★ **1150** 819-54
	SSS	SS54HCT147	819-57
54HCT149	National	MM54HCT149	819-41
54HCT151	**RCA**	**CD54HCT151**	★ **1150** 833-48
54HCT153	National	MM54HCT153	832-26
	RCA	**CD54HCT153**	★ **1150** 832-28
54HCT154	**RCA**	**CD54HCT154**	★ **1150** 819-35
54HCT155	National	MM54HCT155	817-137
54HCT157	Motorola	MC54HCT157	832-85
	RCA	**CD54HCT157**	★ **1150** 832-87
	SSS	SS54HCT157	832-91
54HCT158	Motorola	MC54HCT158	832-120
	RCA	**CD54HCT158**	★ **1150** 832-122
54HCT160	National	MM54HCT160	815-1
	RCA	**CD54HCT160**	★ **1150** 815-3
54HCT161	National	MM54HCT161	812-8
	RCA	**CD54HCT161**	★ **1150** 812-10
	SSS	SS54HCT161	812-14
54HCT162	National	MM54HCT162	814-135
	RCA	**CD54HCT162**	★ **1150** 814-137
54HCT163	National	MM54HCT163	811-145
	RCA	**CD54HCT163**	★ **1150** 811-147
	SSS	SS54HCT163	811-151
54HCT164	National	MM54HCT164	836-56
	RCA	**CD54HCT164**	★ **1149** 836-58
54HCT165	**RCA**	**CD54HCT165**	★ **1149** 836-14
54HCT166	Motorola	MC54HCT166	836-84
	National	MM54HCT166	836-86
	RCA	**CD54HCT166**	★ **1149** 836-88
54HCT169	National	MM54HCT169	813-31
54HCT173	**RCA**	**CD54HCT173**	★ **1149** 820-154
54HCT174	National	MM54HCT174	821-22
	RCA	**CD54HCT174**	★ **1149** 821-24
	SSS	SS54HCT174	821-28
54HCT175	**RCA**	**CD54HCT175**	★ **1149** 820-111
	SSS	SS54HCT175	820-115
54HCT181	**RCA**	**CD54HCT181**	★ **1150** 806-173
54HCT182	**RCA**	**CD54HCT182**	★ **1150** 806-92
54HCT190	**RCA**	**CD54HCT190**	★ **1150** 815-139
54HCT191	National	MM54HCT191	812-76
	RCA	**CD54HCT191**	★ **1150** 812-80
54HCT192	**RCA**	**CD54HCT192**	★ **1150** 815-49
	SSS	SS54HCT192	815-52
54HCT193	National	MM54HCT193	812-77
	RCA	**CD54HCT193**	★ **1150** 812-81
54HCT194	**RCA**	**CD54HCT194**	★ **1149** 835-45
54HCT195	**RCA**	**CD54HCT195**	★ **1149** 835-110
54HCT20	**RCA**	**CD54HCT20**	★ **1149** 824-138
54HCT21	**RCA**	**CD54HCT21**	★ **1149** 823-172
54HCT221	**RCA**	**CD54HCT221**	★ **1150** 834-44
54HCT237	CTI	54HCT237	818-127
	RCA	**CD54HCT237**	★ **1150** 818-135
	SSS	SS54HCT237	818-94
	Supertex	54HCT237	818-142
	TI	**SN54HCT237**	★ **714** 818-96
54HCT238	CTI	54HCT238	818-39
	RCA	**CD54HCT238**	★ **1150** 818-19
	SSS	SS54HCT238	818-61
	Supertex	54HCT238	818-65
	TI	**SN54HCT238**	★ **714** 818-97
54HCT239	CTI	54HCT239	817-131
	SSS	SS54HCT239	817-149
	Supertex	54HCT239	817-153
54HCT240	CTI	54HCT240	839-96
	Hitachi	HD54HCT240	840-90
	Mitel	MD54HCT240R	839-102
	Motorola	MC54HCT240	839-105
	National	MM54HCT240	839-107
	RCA	**CD54HCT240**	★ **1149** 839-110
	Signetics	54HCT240	839-117
	SSS	SS54HCT240	839-119
	Supertex	54HCT240	839-121
	TI	**SN54HCT240**	★ **714** 839-123
54HCT241	CTI	54HCT241	839-172
	Mitel	MD54HCT241R	839-183
	Motorola	MC54HCT241	839-188
	National	MM54HCT241	840-54
	RCA	**CD54HCT241**	★ **1149** 840-6
	Signetics	54HCT241	840-17
	SSS	SS54HCT241	840-21
	Supertex	54HCT241	840-25
	TI	**SN54HCT241**	★ **714** 840-56
	Zytrex	ZX54HCT241	840-35
54HCT242	**RCA**	**CD54HCT242**	★ **1149** 838-106
	SSS	SS54HCT242	838-109
	Supertex	54HCT242	838-113
54HCT243	RCA	CD54HCT243	838-130
	SSS	SS54HCT243	838-110
	Supertex	54HCT243	838-133
54HCT244	CTI	54HCT244	839-173
	Mitel	MD54HCT244R	839-184
	Motorola	MC54HCT244	839-189
	National	MM54HCT244	840-2
	RCA	**CD54HCT244**	★ **1149** 840-7
	Signetics	54HCT244	840-18
	SSS	SS54HCT244	840-22
	Supertex	54HCT244	840-26
	TI	**SN54HCT244**	★ **714**
54HCT245	CTI	54HCT245	841-150
	Mitel	MD54HCT245R	841-157
	Motorola	MC54HCT245	841-160
	National	MM54HCT245	841-162
	RCA	**CD54HCT245**	★ **1149** 841-165
	SSS	SS54HCT245	841-171
	Supertex	54HCT245	841-173
	TI	**SN54HCT245**	★ **714** 841-175
	Zytrex	ZX54HCT245	841-182
54HCT251	**RCA**	**CD54HCT251**	★ **1150** 833-136
	SSS	SS54HCT251	833-144
54HCT253	National	MM54HCT253	832-47
	RCA	**CD54HCT253**	★ **1150** 832-49
	SSS	SS54HCT253	832-51
54HCT257	**RCA**	**CD54HCT257**	★ **1150** 832-154
54HCT258	**RCA**	**CD54HCT258**	★ **1150** 832-179
54HCT259	**RCA**	**CD54HCT259**	★ **1150** 831-2
	SSS	SS54HCT259	831-6
54HCT27	**RCA**	**CD54HCT27**	★ **1149** 827-79
	SSS	SS54HCT27	827-82

¶ Indicates page number in Application Note Directory.

★ Indicates additional data is provided on the page noted.

Base Number	Source	Device	Page-Line
54HCT273			
	National	MM54HCT273	821-81
	RCA	**CD54HCT273 ★ 1149**	821-83
	SSS	SS54HCT273	821-87
	Supertex	54HCT273	821-89
54HCT280			
	RCA	**CD54HCT280 ★ 1150**	808-47
54HCT283			
	RCA	**CD54HCT283 ★ 1150**	806-53
54HCT297			
	RCA	**CD54HCT297 ★ 1150**	3375-15
	Signetics	54HCT297	3375-19
54HCT299			
	National	MM54HCT299	836-163
	RCA	**CD54HCT299 ★ 1149**	836-165
54HCT30			
	RCA	**CD54HCT30 ★ 1149**	825-167
54HCT32			
	RCA	**CD54HCT32 ★ 1149**	826-150
54HCT34			
	Motorola	MC54HCT34	811-33
	National	MM54HCT34	811-39
54HCT354			
	RCA	**CD54HCT354 ★ 1150**	833-137
	SSS	SS54HCT354	833-145
54HCT356			
	RCA	**CD54HCT356 ★ 1150**	833-138
54HCT365			
	RCA	**CD54HCT365 ★ 1149**	809-152
	SSS	SS54HCT365	809-160
54HCT366			
	RCA	**CD54HCT366 ★ 1149**	810-23
54HCT367			
	RCA	**CD54HCT367 ★ 1149**	809-153
54HCT368			
	RCA	**CD54HCT368 ★ 1149**	810-24
54HCT373			
	CTI	54HCT373	829-159
	Mitel	MD54HCT373R	829-170
	Motorola	MC54HCT373	829-175
	National	MM54HCT373	829-177
	RCA	**CD54HCT373 ★ 1150**	829-181
	SSS	SS54HCT373	829-192
	Supertex	54HCT373	830-4
	TI	**SN54HCT373 ★ 714**	830-8
54HCT374			
	CTI	54HCT374	822-99
	Mitel	MD54HCT374R	822-110
	Motorola	MC54HCT374	822-114
	National	MM54HCT374	822-116
	RCA	**CD54HCT374 ★ 1149**	822-122
	SSS	SS54HCT374	822-133
	Supertex	54HCT374	822-137
	TI	**SN54HCT374 ★ 714**	822-141
54HCT377			
	RCA	**CD54HCT377 ★ 1149**	821-119
	SSS	SS54HCT377	821-122
54HCT384			
	RCA	CD54HCT384	843-44
	Signetics	54HCT384	843-46
54HCT390			
	RCA	**CD54HCT390 ★ 1150**	815-159
54HCT393			
	RCA	**CD54HCT393 ★ 1150**	812-188
	Supertex	54HCT393	812-152
54HCT4002			
	RCA	**CD54HCT4002 ★ 1149**	827-26
	Signetics	54HCT4002	827-28
54HCT40102			
	RCA	**CD54HCT40102 ★ 1150**	815-89
54HCT40103			
	RCA	**CD54HCT40103 ★ 1150**	813-75
54HCT40104			
	RCA	**CD54HCT40104 ★ 1149**	835-60
54HCT40105			
	RCA	**CD54HCT40105 ★ 1149**	831-50
54HCT4015			
	RCA	**CD54HCT4015 ★ 1149**	834-155
54HCT4016			
	RCA	**CD54HCT4016 ★ 1149**	2824-58
54HCT4017			
	RCA	**CD54HCT4017 ★ 1150**	814-85
54HCT4020			
	RCA	**CD54HCT4020 ★ 1150**	813-179
54HCT4024			
	RCA	**CD54HCT4024 ★ 1150**	813-48
54HCT4040			
	RCA	**CD54HCT4040 ★ 1150**	813-137
54HCT4046			
	RCA	**CD54HCT4046 ★ 1150**	837-109
54HCT4051			
	RCA	**CD54HCT4051 ★ 1150**	2830-126
54HCT4052			
	RCA	**CD54HCT4052 ★ 1150**	2830-27
54HCT4053			
	RCA	**CD54HCT4053 ★ 1150**	2826-55
54HCT4059			
	RCA	**CD54HCT4059 ★ 1150**	816-56
54HCT4060			
	RCA	**CD54HCT4060 ★ 1150**	814-24
54HCT4066			
	RCA	**CD54HCT4066 ★ 1149**	
54HCT4067			
	RCA	**CD54HCT4067 ★ 1150**	2831-63
54HCT4075			
	RCA	**CD54HCT4075 ★ 1149**	826-103
54HCT4094			
	RCA	**CD54HCT4094 ★ 1149**	835-162
54HCT42			
	RCA	**CD54HCT42 ★ 1150**	817-28
54HCT423			
	RCA	**CD54HCT423 ★ 1150**	834-45
54HCT4316			
	RCA	**CD54HCT4316 ★ 1149**	2824-59
54HCT4351			
	RCA	**CD54HCT4351 ★ 1150**	2830-127
54HCT4352			
	RCA	**CD54HCT4352 ★ 1150**	2830-28
54HCT4353			
	RCA	**CD54HCT4353 ★ 1150**	2826-56
54HCT4510			
	RCA	**CD54HCT4510 ★ 1150**	815-123
54HCT4511			
	RCA	**CD54HCT4511 ★ 1150**	819-144
54HCT4514			
	RCA	**CD54HCT4514 ★ 1150**	818-171
54HCT4515			
	RCA	**CD54HCT4515 ★ 1150**	818-172
54HCT4516			
	RCA	**CD54HCT4516 ★ 1150**	812-82
54HCT4518			
	RCA	**CD54HCT4518 ★ 1150**	815-179
54HCT4520			
	RCA	**CD54HCT4520 ★ 1150**	812-139
54HCT4538			
	RCA	**CD54HCT4538 ★ 1150**	834-46
54HCT4543			
	RCA	**CD54HCT4543 ★ 1150**	819-93
54HCT521			
	National	MM54HCT521	807-49
54HCT533			
	CTI	54HCT533	830-84
	Motorola	MC54HCT533	830-94
	National	MM54HCT533	830-96
	RCA	**CD54HCT533 ★ 1150**	830-100
	SSS	SS54HCT533	830-111
	Supertex	54HCT533	830-115
	TI	SN54HCT533	830-119
54HCT534			
	CTI	54HCT534	821-183
	Motorola	MC54HCT534	821-193
	National	MM54HCT534	821-195
	RCA	**CD54HCT534 ★ 1149**	822-3
	SSS	SS54HCT534	822-11
	Supertex	54HCT534	822-15
	TI	SN54HCT534	822-19
54HCT540			
	CTI	54HCT540	810-83
	Mitel	MD54HCT540R	810-93
	Motorola	MC54HCT540	810-97
	National	MM54HCT540	810-101
	RCA	**CD54HCT540 ★ 1149**	810-107
	SSS	SS54HCT540	810-119
	Supertex	54HCT540	810-137
	TI	**SN54HCT540 ★ 714**	839-124
54HCT541			
	CTI	54HCT541	810-84
	Mitel	MD54HCT541R	810-94
	Motorola	MC54HCT541	810-98
	National	MM54HCT541	810-102
	RCA	**CD54HCT541 ★ 1149**	810-108
	SSS	SS54HCT541	810-120
	Supertex	54HCT541	810-123
	TI	**SN54HCT541 ★ 714**	810-126
54HCT543			
	National	MM54HCT543	842-25
54HCT544			
	National	MM54HCT544	842-26
54HCT550			
	Motorola	MC54HCT550	837-100
	National	MM54HCT550	842-44
54HCT551			
	Motorola	MC54HCT551	837-96
	National	MM54HCT551	842-45
54HCT563			
	CTI	54HCT563	830-85
	RCA	**CD54HCT563 ★ 1150**	830-101
	SSS	SS54HCT563	830-112
	Supertex	54HCT563	830-116
54HCT564			
	CTI	54HCT564	821-184
	RCA	**CD54HCT564 ★ 1149**	822-4
			(Continued)
54HCT564			
	SSS	SS54HCT564	822-12
	Supertex	54HCT564	822-16
54HCT573			
	CTI	54HCT573	829-160
	Mitel	MD54HCT573R	829-171
	RCA	**CD54HCT573 ★ 1150**	829-182
	SSS	SS54HCT573	830-1
	Supertex	54HCT573	830-5
54HCT574			
	CTI	54HCT574	822-100
	Mitel	MD54HCT574R	822-111
	National	MM54HCT574	822-117
	RCA	**CD54HCT574 ★ 1149**	822-123
	SSS	SS54HCT574	822-134
	Supertex	54HCT574	822-138
54HCT583			
	RCA	**CD54HCT583 ★ 1150**	806-4
54HCT590			
	National	MM54HCT590	813-113
54HCT597			
	RCA	**CD54HCT597 ★ 1149**	836-29
54HCT620			
	Motorola	MC54HCT620	841-53
54HCT623			
	Motorola	MC54HCT623	841-54
54HCT640			
	Motorola	MC54HCT640	841-81
	National	MM54HCT640	841-83
	RCA	**CD54HCT640 ★ 1149**	841-88
	SSS	SS54HCT640	841-92
54HCT643			
	Motorola	MC54HCT643	842-7
	National	MM54HCT643	841-84
	RCA	**CD54HCT643 ★ 1149**	842-9
	SSS	SS54HCT643	842-13
54HCT645			
	SSS	SS54HCT645	840-97
54HCT646			
	RCA	**CD54HCT646 ★ 1149**	840-181
	SSS	SS54HCT646	840-185
54HCT648			
	RCA	**CD54HCT648 ★ 1149**	840-134
	SSS	SS54HCT648	840-138
54HCT651			
	Motorola	MC54HCT651	840-132
54HCT652			
	Motorola	MC54HCT652	840-179
54HCT658			
	Motorola	MC54HCT658	837-90
54HCT659			
	Motorola	MC54HCT659	837-91
54HCT664			
	Motorola	MC54HCT664	841-16
54HCT665			
	Motorola	MC54HCT665	841-17
54HCT670			
	RCA	**CD54HCT670 ★ 1149**	831-71
54HCT688			
	National	MM54HCT688	806-145
	RCA	**CD54HCT688 ★ 1150**	806-115
54HCT7046			
	RCA	**CD54HCT7046 ★ 1150**	834-148
54HCT7266			
	RCA	CD54HCT7266	828-112
54HCT73			
	RCA	**CD54HCT73 ★ 1149**	823-146
54HCT74			
	National	MM54HCT74	820-40
	RCA	**CD54HCT74 ★ 1149**	820-42
	SSS	SS54HCT74	820-46
54HCT75			
	RCA	**CD54HCT75 ★ 1150**	830-157
	SSS	SS54HCT75	830-160

Arranged alphanumerically from left to right.

Base Number	Source	Device	Page-Line
54HCT76	National	MM54HCT76	823-23
54HCT85	**RCA**	**CD54HCT85**	★ **1150** 807-51
54HCT86	**RCA**	**CD54HCT86**	★ **1149** 828-51
54HCT9034	Motorola	MC54HCT9034	810-147
54HCT9035	Motorola	MC54HCT9035	808-69
54HCT93	**RCA**	**CD54HCT93**	★ **1150** 813-7
54HCU04	Motorola	MC54HCU04	811-83
	National	MM54HCU04	811-85
	RCA	CD54HCU04	811-11
	TI	**SN54HCU04**	★ **714** 811-89
54L164	National	DM54L164A	3856-37
54L91	National	DM54L91	3856-66
54L95	National	DM54L95	3854-30
54LS00	**Fairchild**	**54LS00**	★ **607** ★ **612** ★ **621** ★ **623** 871-24
	Motorola	**SN54LS00**	★ **1122** 871-28
	National	DM54LS00	871-29
	SGS	54LS00	871-32
	Signetics	54LS00	871-34
	TI	**SN54LS00**	★ **715** 871-36
54LS01	**Motorola**	**SN54LS01**	★ **1122** 871-173
	National	DM54LS01	871-177
	Signetics	54LS01	871-185
	TI	**SN54LS01**	★ **715** 871-188
54LS02	**Fairchild**	**54LS02**	★ **607** ★ **612** ★ **621** ★ **623** 874-18
	Motorola	**SN54LS02**	★ **1122** 874-24
	National	DM54LS02	874-28
	SGS	54LS02	874-32
	Signetics	54LS02	874-36
	TI	**SN54LS02**	★ **715** 874-39
54LS03	**Fairchild**	**54LS03**	★ **607** ★ **612** ★ **621** ★ **623** 871-168
	Motorola	**SN54LS03**	★ **1122** 871-174
	National	DM54LS03	871-178
	SGS	54LS03	871-183
	Signetics	54LS03	871-186
	TI	**SN54LS03**	★ **715** 871-189
54LS04	**Fairchild**	**54LS04**	★ **607** ★ **612** ★ **621** ★ **623** 857-113
	Motorola	**SN54LS04**	★ **1124** 857-117
	National	DM54LS04	857-119
	SGS	54LS04	857-122
	Signetics	54LS04	857-124
	TI	**SN54LS04**	★ **715** 857-126
54LS05	**Fairchild**	**54LS05**	★ **607** ★ **612** ★ **621** ★ **623** 857-158
	Motorola	**SN54LS05**	★ **1124** 857-164
	National	DM54LS05	857-166
			(Continued)
54LS05	SGS	54LS05	857-169
	Signetics	54LS05	857-171
	TI	**SN54LS05**	★ **715** 857-173
54LS08	**Fairchild**	**54LS08**	★ **607** ★ **612** ★ **621** ★ **623** 869-108
	Motorola	**SN54LS08**	★ **1122** 869-112
	National	DM54LS08	869-114
	SGS	54LS08	869-117
	Signetics	54LS08	869-119
	TI	**SN54LS08**	★ **715** 869-121
54LS09	**Fairchild**	**54LS09**	★ **612** 869-146
	Motorola	**SN54LS09**	★ **1122** 869-150
	National	DM54LS09	869-152
	SGS	54LS09	869-156
	Signetics	54LS09	869-158
	TI	**SN54LS09**	★ **715** 869-160
54LS10	**Fairchild**	**54LS10**	★ **607** ★ **612** ★ **621** ★ **623** 870-140
	Motorola	**SN54LS10**	★ **1122** 870-144
	National	DM54LS10	870-146
	SGS	54LS10	870-149
	Signetics	54LS10	870-151
	TI	**SN54LS10**	★ **715** 870-153
54LS107	**Motorola**	**SN54LS107A**	★ **1126** 868-2
	National	DM54LS107A	868-6
	Signetics	54LS107	868-12
	TI	**SN54LS107A**	★ **715** 868-16
54LS109	**Fairchild**	**54LS109**	★ **608** ★ **612** ★ **621** ★ **623** 867-124
	Motorola	**SN54LS109A**	★ **1126** 867-128
	National	DM54LS109	867-130
	SGS	54LS109	867-133
	Signetics	54LS109	867-135
	TI	**SN54LS109A**	★ **715** 867-137
54LS11	**Fairchild**	**54LS11**	★ **607** ★ **612** ★ **621** ★ **623** 869-25
	Motorola	**SN54LS11**	★ **1122** 869-28
	National	DM54LS11	869-30
	SGS	54LS11	869-33
	Signetics	54LS11	869-35
	TI	**SN54LS11**	★ **715** 869-37
54LS112	**Fairchild**	**54LS112**	★ **608** ★ **612** ★ **621** ★ **623** 868-91
	Motorola	**SN54LS112A**	★ **1126** 868-95
	National	DM54LS112	868-97
	SGS	54LS112	868-128
	Signetics	54LS112	868-100
54LS113	**Fairchild**	**54LS113**	★ **608** ★ **612** ★ **621** ★ **623** 868-54
			(Continued)
54LS113	**Motorola**	**SN54LS113A**	★ **1126** 868-57
	National	DM54LS113A	868-59
	SGS	54LS113	868-62
	Signetics	54LS113	868-64
54LS114	**Fairchild**	**54LS114**	★ **608** ★ **612** ★ **621** ★ **623** 868-120
	Motorola	**SN54LS114A**	★ **1126** 868-123
	National	DM54LS114A	868-125
	SGS	T54LS114	868-130
54LS12	Fairchild	54LS12	870-173
	Motorola	**SN54LS12**	★ **1122** 870-176
	National	DM54LS12	870-178
	TI	**SN54LS12**	★ **715** 870-181
54LS122	Fairchild	54LS122	880-116
	Motorola	**SN54LS122**	★ **1131** 880-119
	TI	**SN54LS122**	★ **715** 880-122
54LS123	Fairchild	54LS123	880-150
	Motorola	**SN54LS123**	★ **1131** 880-153
	TI	**SN54LS123**	★ **715** 880-157 ¶ 361-15
54LS125	**Fairchild**	**54LS125A**	★ **612** 856-101
	Motorola	**SN54LS125A**	★ **1124** 856-105
	National	DM54LS125A	856-107
	SGS	54LS125A	856-110
	Signetics	54LS125A	856-112
	TI	**SN54LS125A**	★ **715** 856-114
54LS126	**Fairchild**	**54LS126**	★ **612** 856-126
	Motorola	**SN54LS126A**	★ **1124** 856-130
	National	DM54LS126	856-132
	SGS	54LS126	856-134
	Signetics	54LS126A	856-136
	TI	**SN54LS126A**	★ **715** 856-138
54LS13	**Fairchild**	**54LS13**	★ **612** 887-112
	Motorola	**SN54LS13**	★ **1125** 887-115
	National	DM54LS13	887-117
	SGS	T54LS13	887-122
	Signetics	54LS13	887-124
	TI	**SN54LS13**	★ **715** 887-126
54LS132	Fairchild	54LS132	887-158
	Motorola	**SN54LS132**	★ **1125** 888-2
	National	DM54LS132	888-4
	SGS	54LS132	887-120
	Signetics	54LS132	888-7
		54LS132A	888-8
	TI	**SN54LS132**	★ **715** 888-10
54LS133	**Fairchild**	**54LS133**	★ **612** 872-58
	Motorola	**SN54LS133**	★ **1122** 872-60
	SGS	54LS133	872-62
54LS136	**Fairchild**	**54LS136**	★ **612** 874-70
	Motorola	**SN54LS136**	★ **1123** 874-74
	National	DM54LS136	874-76
			(Continued)
54LS136	SGS	54LS136	874-79
	Signetics	54LS136	874-81
	TI	**SN54LS136**	★ **715** 874-83
54LS137	**Motorola**	**SN54LS137**	★ **1130** 863-154
	TI	**SN54LS137**	★ **715** 863-156
54LS138	**Fairchild**	**54LS138**	★ **608** ★ **612** ★ **621** ★ **623** 863-114
	Motorola	**SN54LS138**	★ **1130** 863-118
	National	DM54LS138	863-120
	SGS	54LS138	863-123
	Signetics	54LS138	863-125
	TI	**SN54LS138**	★ **715** 863-127
54LS139	**Fairchild**	**54LS139**	★ **608** ★ **613** ★ **621** ★ **623** 863-14
	Motorola	**SN54LS139**	★ **1130** 863-18
	National	DM54LS139	863-20
	SGS	54LS139	863-23
	Signetics	54LS139	863-25
	TI	**SN54LS139A**	★ **715** 863-27
54LS14	**Fairchild**	**54LS14**	★ **612** 888-36
	Motorola	**SN54LS14**	★ **1125** 888-40
	National	DM54LS14	888-42
	SGS	54LS14	888-45
	Signetics	54LS14	888-47
	TI	**SN54LS14**	★ **715** 888-49
54LS145	**Motorola**	**SN54LS145**	★ **1130** 862-108
	TI	**SN54LS145**	★ **715** 862-111
54LS147	**Motorola**	**SN54LS147**	★ **1131** 889-49
	TI	**SN54LS147**	★ **715** 889-51
54LS148	**Motorola**	**SN54LS148**	★ **1131** 888-159
	TI	**SN54LS148**	★ **715** 888-163
54LS15	**Fairchild**	**54LS15**	★ **612** 869-53
	Motorola	**SN54LS15**	★ **1122** 869-56
	National	DM54LS15	869-58
	SGS	54LS15	869-61
	TI	**SN54LS15**	★ **715** 869-63
54LS151	**Fairchild**	**54LS151**	★ **608** ★ **613** ★ **621** ★ **623** 879-172
	Motorola	**SN54LS151**	★ **1129** 879-176
	National	DM54LS151	879-178
	SGS	54LS151	880-1
	Signetics	54LS151	880-3
	TI	**SN54LS151**	★ **715** 880-5
54LS152	**Fairchild**	**54LS152**	★ **613** 880-20
	Motorola	SN54LS152	880-22

¶ Indicates page number in Application Note Directory.
★ Indicates additional data is provided on the page noted.

Base Number	Source	Device	Page-Line
54LS153			
	Fairchild	**54LS153**	★ **608**
			★ **613**
			★ **621**
			★ **623**
			877-138
	Motorola	**SN54LS153**	★ **1129**
			877-142
	National	DM54LS153	877-144
	SGS	54LS153	877-147
	Signetics	54LS153	877-149
	TI	**SN54LS153**	★ **715**
			877-151
54LS154			
	National	DM54LS154	863-181
	Signetics	54LS154	864-2
54LS155			
	Fairchild	**54LS155**	★ **613**
			863-78
	Motorola	**SN54LS155**	★ **1130**
			863-82
	National	DM54LS155	863-84
	SGS	54LS155	863-87
	Signetics	54LS155	863-89
	TI	**SN54LS155A**	★ **715**
			863-91
54LS156			
	Fairchild	**54LS156**	★ **613**
			863-47
	Motorola	**SN54LS156**	★ **1130**
			863-51
	National	DM54LS156	863-53
	SGS	54LS156	863-56
	Signetics	54LS156	863-58
	TI	**SN54LS156**	★ **715**
			863-60
54LS157			
	Fairchild	**54LS157**	★ **608**
			★ **613**
			★ **621**
			★ **623**
			879-7
	Motorola	**SN54LS157**	★ **1129**
			879-11
	National	DM54LS157	879-13
	SGS	54LS157	879-16
	Signetics	54LS157	879-18
	TI	**SN54LS157**	★ **715**
			879-20
54LS158			
	Fairchild	**54LS158**	★ **608**
			★ **613**
			★ **621**
			★ **623**
			878-92
	Motorola	**SN54LS158**	★ **1129**
			878-96
	National	DM54LS158	878-98
	SGS	54LS158	878-101
	Signetics	54LS158	878-103
	TI	**SN54LS158**	★ **715**
			878-105
54LS160			
	Fairchild	**54LS160A**	★ **613**
			860-161
	Motorola	**SN54LS160A**	★ **1127**
			860-164
	National	DM54LS160A	860-166
	SGS	54LS160	860-169
	Signetics	54LS160A	860-171
	TI	**SN54LS160A**	★ **715**
			860-173
54LS161			
	Fairchild	**54LS161**	★ **613**
			858-151
	Motorola	**SN54LS161A**	★ **1127**
			858-155
	National	DM54LS161A	858-157
	SGS	54LS161	858-160
	Signetics	54LS161A	858-162
	TI	**SN54LS161A**	★ **715**
			858-164
54LS162			
	Fairchild	**54LS162A**	★ **613**
			861-11
	Motorola	**SN54LS162A**	★ **1127**
			(Continued)
54LS162			
	Motorola	SN54LS162A	861-14
	National	DM54LS162	861-16
	SGS	54LS162	861-19
	Signetics	54LS162A	861-21
	TI	**SN54LS162A**	★ **715**
			861-23
54LS163			
	Fairchild	**54LS163A**	★ **613**
			859-6
	Motorola	**SN54LS163A**	★ **1127**
			859-10
	National	DM54LS163A	859-12
	Signetics	54LS163A	859-16
	TI	**SN54LS163A**	★ **715**
			859-18
54LS164			
	Fairchild	**54LS164**	★ **613**
			882-4
			3856-40
	Motorola	**SN54LS164**	★ **1128**
			882-8
			3856-46
	National	DM54LS164	882-10
			3856-49
	SGS	54LS164	882-13
	Signetics	54LS164	882-15
			3856-57
		54LS164B	882-16
	TI	**SN54LS164**	★ **715**
54LS165			
	Fairchild	**54LS165**	★ **613**
			882-54
			3855-119
	Motorola	**SN54LS165**	★ **1128**
			882-58
			3856-3
54LS166			
	Motorola	**SN54LS166**	★ **1128**
			882-72
	National	DM54LS166	882-74
54LS168			
	Fairchild	**54LS168**	★ **613**
			861-93
	Motorola	**SN54LS168**	★ **1127**
			861-95
	National	DM54LS168A	861-99
	SGS	T54LS168	861-101
	Signetics	54LS168A	861-103
54LS169			
	Fairchild	**54LS169**	★ **613**
			859-139
	Motorola	**SN54LS169**	★ **1127**
			859-141
	National	DM54LS169A	859-143
	SGS	T54LS169	859-145
	Signetics	54LS169A	859-147
	TI	SN54LS169B	859-149
54LS170			
	Fairchild	**54LS170**	★ **613**
			877-4
			3830-79
	Motorola	**SN54LS170**	★ **1128**
			877-7
	National	DM54LS170	877-10
			3830-85
	SGS	54LS170	877-13
	Signetics	54LS170	3830-89
54LS173			
	Fairchild	**54LS173A**	★ **613**
			866-13
	Motorola	**SN54LS173A**	★ **1126**
			866-15
	National	DM54LS173	866-17
	Signetics	54LS173	866-20
	TI	SN54LS173A	866-22
54LS174			
	Fairchild	**54LS174**	★ **608**
			★ **613**
			★ **621**
			★ **623**
			866-49
	Motorola	**SN54LS174**	★ **1126**
			866-53
	National	DM54LS174	866-55
	SGS	54LS174	866-58
			(Continued)
54LS174			
	Signetics	54LS174	866-60
	TI	SN54LS174	866-62
54LS175			
	Fairchild	**54LS175**	★ **608**
			★ **613**
			★ **621**
			★ **623**
			864-281
	Motorola	**SN54LS175**	★ **1126**
			864-285
	National	DM54LS175	864-287
	SGS	54LS175	864-290
	Signetics	54LS175	864-292
	TI	SN54LS175	864-294
54LS181			
	Fairchild	**54LS181**	★ **613**
			855-56
	Motorola	**SN54LS181**	★ **1132**
			855-59
	SGS	54LS181	855-61
	Signetics	54LS181	855-63
	TI	SN54LS181	855-65
54LS182			
	Motorola	**SN54LS182**	★ **1132**
			855-107
54LS183			
	Motorola	**SN54LS183**	★ **1132**
			855-4
	TI	SN54LS183	855-6
54LS189			
	Fairchild	54LS189	3831-84
	TI	SN54LS189A	3831-104
54LS190			
	Fairchild	54LS190	861-168
	Motorola	**SN54LS190**	★ **1127**
			861-171
	National	DM54LS190	861-173
	SGS	54LS190	861-176
	Signetics	54LS190	861-178
	TI	SN54LS190	861-179
54LS191			
	Fairchild	54LS191	859-175
	Motorola	**SN54LS191**	★ **1127**
			859-179
	National	DM54LS191	859-181
	SGS	54LS191	860-1
	Signetics	54LS191	860-3
	TI	SN54LS191	860-5
54LS192			
	Fairchild	**54LS192**	★ **613**
			861-136
	Motorola	**SN54LS192**	★ **1127**
			861-139
	National	DM54LS192	861-141
	SGS	54LS192	861-144
	Signetics	54LS192	861-146
	TI	SN54LS192	861-148
54LS193			
	Fairchild	**54LS193**	★ **608**
			★ **613**
			★ **621**
			★ **623**
			860-35
	Motorola	**SN54LS193**	★ **1127**
			860-39
	National	DM54LS193	860-41
	SGS	54LS193	860-44
	Signetics	54LS193	860-46
	TI	SN54LS193	860-48
54LS194			
	Fairchild	**54LS194A**	★ **608**
			★ **613**
			★ **621**
			★ **623**
			881-134
			★ **608**
			★ **613**
			★ **621**
			★ **623**
			3854-73
	Motorola	**SN54LS194A**	★ **1128**
			881-137
			3854-88
	National	DM54LS194A	881-139
	Signetics	54LS194A	881-143
54LS195			
	Fairchild	**54LS195**	★ **613**
			881-43
		54LS195A	★ **613**
			3854-74
	Motorola	**SN54LS195A**	★ **1128**
			881-47
			3854-89
	National	DM54LS195A	881-49
	Signetics	54LS195A	3854-105
54LS196			
	Fairchild	54LS196	860-120
	Motorola	**SN54LS196**	★ **1127**
			860-122
	National	DM54LS196	860-124
	SGS	54LS196	860-127
	TI	SN54LS196	860-129
54LS197			
	Fairchild	54LS197	858-98
	Motorola	**SN54LS197**	★ **1127**
			858-100
	National	DM54LS197	858-102
	SGS	54LS197	858-105
	Signetics	54LS197	858-107
	TI	SN54LS197	858-109
54LS20	**Fairchild**	**54LS20**	★ **608**
			★ **612**
			★ **621**
			★ **623**
			870-12
	Motorola	**SN54LS20**	★ **1122**
			870-16
	National	DM54LS20	870-18
	SGS	54LS20	870-21
	Signetics	54LS20	870-23
	TI	**SN54LS20**	★ **715**
			870-25
54LS21	**Fairchild**	**54LS21**	★ **608**
			★ **612**
			★ **621**
			★ **623**
			868-159
	Motorola	**SN54LS21**	★ **1122**
			868-163
	National	DM54LS21	868-165
	SGS	54LS21	868-168
	Signetics	54LS21	868-170
	TI	**SN54LS21**	★ **715**
			868-172
54LS210			
	MMI	SN54LS210	883-155
54LS219			
	TI	SN54LS219A	3831-105
54LS22	**Fairchild**	**54LS22**	★ **608**
			★ **612**
			★ **621**
			★ **623**
			870-89
	Motorola	**SN54LS22**	★ **1122**
			870-92
	National	DM54LS22	870-94
	SGS	54LS22	870-97
	TI	**SN54LS22**	★ **715**
			870-99
54LS221			
	Fairchild	54LS221	880-130
	Motorola	**SN54LS221**	★ **1131**
			880-133
	National	DM54LS221	880-135
	Signetics	54LS221	880-137
	TI	SN54LS221	880-138
54LS222			
	TI	**SN54LS222**	★ **729**
			3809-6
54LS224			
	TI	**SN54LS224**	★ **729**
			3809-7
54LS240			
	Fairchild	**54LS240**	★ **608**
			★ **613**
			★ **621**
			★ **623**
			883-150
			★ **608**
			★ **613**
			★ **621**
			(Continued)

Arranged alphanumerically from left to right.

PART NUMBER INDEX

Base Number	Source	Device	Page-Line
54LS240			
	Fairchild	**54LS240**	★ **623**
			2882-43
	MMI	SN54LS240	883-156
			2882-50
	Motorola	**SN54LS240**	★ **1124**
			883-158
			2882-54
	National	DM54LS240	883-162
	Signetics	54LS240	883-170
54LS241			
	Fairchild	**54LS241**	★ **613**
			884-32
			2881-57
	MMI	SN54LS241	884-38
			2882-5
	Motorola	**SN54LS241**	★ **1124**
			884-42
			2882-15
	National	DM54LS241	884-46
	Signetics	54LS241	884-48
54LS242			
	Fairchild	54LS242	2888-21
	Motorola	**SN54LS242**	★ **1124**
			883-76
			2888-23
	National	DM54LS242	883-80
	Signetics	54LS242	883-84
54LS243			
	Fairchild	54LS243	2888-22
	Motorola	**SN54LS243**	★ **1124**
			883-77
			2888-24
	National	DM54LS243	883-81
	Signetics	54LS243	883-85
54LS244			
	Fairchild	**54LS244**	★ **613**
			884-84
	MMI	SN54LS244	884-88
			2882-6
	Motorola	**SN54LS244**	★ **1124**
			884-91
			2882-16
	Signetics	54LS244	884-93
54LS245			
	Fairchild	**54LS245**	★ **613**
			885-102
			2890-44
	MMI	SN54LS245	885-107
			2882-7
	Motorola	**SN54LS245**	★ **1124**
			885-109
			2890-45
	National	DM54LS245	885-113
	Signetics	54LS245	885-116
	TI	SN54LS245	885-123
54LS247			
	Fairchild	**54LS247**	★ **613**
			2875-101
	Motorola	**SN54LS247**	★ **1130**
			2875-111
	National	DM54LS247	2875-116
	TI	SN54LS247	2875-125
54LS248			
	Fairchild	**54LS248**	★ **613**
			2875-60
	Motorola	**SN54LS248**	★ **1130**
			2875-72
	National	DM54LS248	2875-77
	TI	SN54LS248	2875-85
54LS249			
	Fairchild	**54LS249**	★ **613**
			2875-39
	Motorola	**SN54LS249**	★ **1130**
			2875-46
	National	DM54LS249	2875-50
	TI	SN54LS249	2875-54
54LS251			
	Fairchild	**54LS251**	★ **613**
			880-49
	Motorola	**SN54LS251**	★ **1129**
			880-53
	National	DM54LS251	880-55
	SGS	54LS251	880-58
	Signetics	54LS251	880-66
54LS253			
	Fairchild	**54LS253**	★ **608**
			★ **613**
			★ **621**
			★ **623**
			878-44
	Motorola	**SN54LS253**	★ **1129**
			878-48
	National	DM54LS253	878-50
	SGS	54LS253	878-53
	Signetics	54LS253	878-55
	TI	SN54LS253	878-57
54LS256			
	Fairchild	**54LS256**	★ **613**
			875-18
	Motorola	**SN54LS256**	★ **1126**
			875-20
	SGS	T54LS256	875-22
	Signetics	54LS256	878-143
54LS257			
	Fairchild	**54LS257A**	★ **608**
			★ **614**
			★ **621**
			★ **623**
			879-46
	Motorola	**SN54LS257A**	★ **1129**
			879-50
	National	DM54LS257B	879-52
	SGS	54LS257	879-55
	Signetics	54LS257A	879-57
	TI	SN54LS257B	879-59
54LS258			
	Fairchild	**54LS258A**	★ **608**
			★ **614**
			★ **622**
			★ **623**
			878-132
	Motorola	**SN54LS258A**	★ **1129**
			878-136
	National	DM54LS258B	878-138
	SGS	54LS258	878-141
	Signetics	54LS258A	878-144
	TI	SN54LS258B	878-146
54LS259			
	Fairchild	**54LS259**	★ **614**
			875-138
	Motorola	**SN54LS259**	★ **1126**
			875-142
	National	DM54LS259	875-144
	SGS	54LS259	875-146
	Signetics	54LS259	875-148
54LS26	**Fairchild**	**54LS26**	★ **612**
			871-120
	Motorola	**SN54LS26**	★ **1122**
			871-123
	National	DM54LS26	871-125
	Signetics	54LS26	871-129
	TI	**SN54LS26**	★ **715**
			871-131
54LS260			
	Fairchild	**54LS260**	★ **614**
			865-18
	Motorola	**SN54LS260**	★ **1122**
			865-20
	SGS	T54LS260	865-23
	Signetics	54LS260A	865-25
54LS261			
	Signetics	54LS261	855-127
	TI	**SN54LS261**	★ **715**
			855-128
54LS266			
	Fairchild	**54LS266**	★ **608**
			★ **614**
			★ **622**
			★ **623**
			874-166
	Motorola	**SN54LS266**	★ **1123**
			874-169
	National	DM54LS266	874-171
	SGS	54LS266	874-174
	Signetics	54LS266	874-176
	TI	**SN54LS266**	★ **715**
			874-179
54LS27	**Fairchild**	**54LS27**	★ **608**
			★ **612**
			★ **621**
54LS27	**Fairchild**	**54LS27**	★ **623**
			865-52
	Motorola	**SN54LS27**	★ **1122**
			865-56
	National	DM54LS27	865-58
	SGS	54LS27	865-61
	Signetics	54LS27	865-63
	TI	**SN54LS27**	★ **715**
54LS273			
	Fairchild	**54LS273**	★ **614**
			866-150
	MMI	SN54LS273	866-154
	Motorola	**SN54LS273**	★ **1126**
			866-155
	Signetics	54LS273	866-158
	TI	**SN54LS273**	★ **715**
			866-160
54LS275			
	TI	**SN54LS275**	★ **715**
			843-12
54LS279			
	Fairchild	**54LS279**	★ **608**
			★ **614**
			★ **622**
			★ **623**
			875-79
	Motorola	**SN54LS279**	★ **1126**
			875-82
	National	DM54LS279	875-84
	SGS	54LS279	875-87
	Signetics	54LS279	875-89
	TI	**SN54LS279A**	★ **715**
			875-90
54LS28	**Fairchild**	**54LS28**	★ **612**
			874-19
	Motorola	**SN54LS28**	★ **1122**
			874-25
	SGS	T54LS28	874-34
	Signetics	54LS28	874-37
	TI	**SN54LS28**	★ **715**
			874-40
54LS280			
	Motorola	**SN54LS280**	★ **1132**
			889-25
	TI	**SN54LS280**	★ **715**
			889-27
54LS283			
	Fairchild	**54LS283**	★ **608**
			★ **614**
			★ **622**
			★ **623**
			856-37
	Motorola	**SN54LS283**	★ **1132**
			856-44
	National	DM54LS283	856-48
	SGS	54LS283	856-54
	Signetics	54LS283	856-58
	TI	**SN54LS283**	★ **715**
			856-62
54LS289			
	Fairchild	54LS289	3831-82
	TI	**SN54LS289A**	★ **715**
			3831-99
54LS290			
	Fairchild	54LS290	860-72
	Motorola	**SN54LS290**	★ **1127**
			860-78
	National	DM54LS290	860-82
	SGS	54LS290	860-88
	Signetics	54LS290	860-92
	TI	**SN54LS290**	★ **715**
			860-96
54LS292			
	TI	**SN54LS292**	★ **715**
			862-59
54LS293			
	Fairchild	54LS293	859-61
	Motorola	**SN54LS293**	★ **1127**
			859-68
	National	DM54LS293	859-72
	SGS	54LS293	859-78
	Signetics	54LS293	859-82
	TI	**SN54LS293**	★ **715**
			859-86
54LS294			
	TI	SN54LS294	862-50
54LS295			
	Fairchild	**54LS295A**	★ **614**
			3854-75
	Motorola	**SN54LS295A**	★ **1129**
			881-16
			3854-90
	SGS	54LS295A	881-18
	Signetics	54LS295B	881-20
	TI	**SN54LS295**	★ **715**
54LS297			
	TI	**SN54LS297**	★ **715**
			¶ 361-2
			¶ 361-3
54LS298			
	Fairchild	**54LS298**	★ **614**
			879-98
	Motorola	**SN54LS298**	★ **1129**
			879-105
	National	DM54LS298	879-111
	SGS	54LS298	879-113
	Signetics	54LS298	879-115
	TI	**SN54LS298**	★ **715**
			879-117
54LS299			
	Fairchild	**54LS299**	★ **614**
			882-138
			3855-91
	Motorola	**SN54LS299**	★ **1129**
			882-144
	TI	**SN54LS299**	★ **715**
54LS30	**Fairchild**	**54LS30**	★ **608**
			★ **612**
			★ **621**
			★ **623**
			872-25
	Motorola	**SN54LS30**	★ **1122**
			872-29
	National	DM54LS30	872-31
	SGS	54LS30	872-34
	Signetics	54LS30	872-36
	TI	**SN54LS30**	★ **715**
			872-38
54LS301			
	Signetics	54LS301	3832-75
54LS310			
	MMI	SN54LS310	884-39
54LS319			
	TI	**SN54LS319A**	★ **715**
			3831-100
54LS32	**Fairchild**	**54LS32**	★ **608**
			★ **612**
			★ **621**
			★ **623**
			873-51
	Motorola	**SN54LS32**	★ **1122**
			873-55
	National	DM54LS32	873-57
	SGS	54LS32	873-60
	Signetics	54LS32	873-62
	TI	**SN54LS32**	★ **715**
			873-64
54LS320			
	TI	**SN54LS320**	★ **715**
			887-58
54LS321			
	TI	**SN54LS321**	★ **715**
			887-59
54LS322			
	AMD	SN54LS322	856-73
	Fairchild	**54LS322**	★ **614**
			856-75
	Motorola	**SN54LS322A**	★ **1129**
			856-77
	TI	**SN54LS322A**	★ **715**
			856-79
54LS323			
	AMD	SN54LS323	882-136
			3855-89
	Fairchild	**54LS323**	★ **614**
			882-139
			3855-92
	Motorola	**SN54LS323**	★ **1129**
			882-145
	TI	**SN54LS323**	★ **715**
54LS33	**Fairchild**	**54LS33**	★ **612**
			865-77
	Motorola	**SN54LS33**	★ **1122**

(Continued)

¶ Indicates page number in Application Note Directory.
★ Indicates additional data is provided on the page noted.

Base Number	Source	Device	Page-Line
54LS33	Motorola	SN54LS33	865-79
	SGS	T54LS33	865-82
	Signetics	54LS33	865-84
	TI	**SN54LS33**	★ **715** 865-86
54LS340	MMI	SN54LS340	883-157 2882-51
54LS341	MMI	SN54LS341	884-40 2882-8
54LS344	MMI	SN54LS344	884-89 2882-9
54LS347	**Fairchild**	**54LS347**	★ **614** 2875-91
	TI	**SN54LS347**	★ **715** 2875-97
54LS348	Motorola	SN54LS348	888-168
	TI	**SN54LS348**	★ **715** 888-170
54LS352	**Fairchild**	**54LS352**	★ **614** 878-21
	Motorola	**SN54LS352**	★ **1129** 878-23
	National	DM54LS352	878-25
	SGS	T54LS352	878-27
	Signetics	54LS352	878-29
	TI	**SN54LS352**	★ **715** 878-31
54LS353	**Fairchild**	**54LS353**	★ **614** 877-104
	Motorola	**SN54LS353**	★ **1129** 877-106
	National	DM54LS353	877-108
	SGS	T54LS353	877-110
	Signetics	54LS353	877-112
	TI	**SN54LS353**	★ **715** 877-114
54LS356	**TI**	**SN54LS356**	★ **715** 880-33
54LS363	Signetics	54LS363	876-22
54LS364	Signetics	54LS364	866-104
54LS365	**Fairchild**	**54LS365**	★ **608** ★ **614** ★ **622** ★ **623** 857-6
	Motorola	**SN54LS365A**	★ **1124** 857-14
	National	DM54LS365A	857-18
	SGS	54LS365	857-24
	Signetics	54LS365A	857-30
	TI	**SN54LS365**	★ **715**
54LS366	**Fairchild**	**54LS366**	★ **608** ★ **614** ★ **622** ★ **623** 858-17
	Motorola	SN54LS366A	858-24
	National	DM54LS366A	858-28
	SGS	54LS366	858-34
	Signetics	54LS366A	858-40
	TI	**SN54LS366**	★ **715**
54LS367	**Fairchild**	**54LS367**	★ **608** ★ **614** ★ **622** ★ **623** 857-7
	Motorola	**SN54LS367A**	★ **1124** 857-15
	National	DM54LS367A	857-19
	SGS	54LS367	857-25
	Signetics	54LS367A	857-31
	TI	**SN54LS367**	★ **715**
54LS368	**Fairchild**	**54LS368**	★ **608** ★ **614** ★ **622** ★ **623** 858-18
	Motorola	**SN54LS368A**	★ **1124** 858-25
	National	DM54LS368A	858-29
	SGS	54LS368	858-35
	Signetics	54LS368A	858-41
	TI	**SN54LS368**	★ **715**
54LS37	**Fairchild**	**54LS37**	★ **612** 871-64
	Motorola	**SN54LS37**	★ **1122** 871-67
	National	DM54LS37	871-69
	SGS	54LS37	871-72
	Signetics	54LS37	871-74
	TI	**SN54LS37**	★ **715** 871-76
54LS373	Fairchild	54LS373	876-9
	MMI	SN54LS373	876-15
	Motorola	**SN54LS373**	★ **1126** 876-16
	National	DM54LS373	876-18
	Signetics	54LS373	876-23
	TI	**SN54LS373**	★ **715** 876-29
54LS374	**Fairchild**	**54LS374**	★ **614** 867-9
	MMI	SN54LS374	867-14
	Motorola	**SN54LS374**	★ **1126** 867-15
	National	DM54LS374	867-17
	Signetics	54LS374	867-20
	TI	**SN54LS374**	★ **715** 867-22
54LS375	**Fairchild**	**54LS375**	★ **614** 875-41
	Motorola	**SN54LS375**	★ **1126** 875-46
	Signetics	54LS375	875-53
	TI	**SN54LS375**	★ **715** 875-57
54LS377	**Fairchild**	**54LS377**	★ **614** 867-40
	MMI	SN54LS377	867-43
	Motorola	**SN54LS377**	★ **1126** 867-44
	National	DM54LS377	875-66
	Signetics	54LS377	867-47
	TI	**SN54LS377**	★ **715** 867-49
54LS378	AMD	SN54LS378	866-82
	Fairchild	**54LS378**	★ **614** 866-84
	Motorola	**SN54LS378**	★ **1126** 866-86
	SGS	T54LS378	866-88
	Signetics	54LS378	866-90
	TI	**SN54LS378**	★ **715** 866-92
54LS379	AMD	SN54LS379	864-329
	Fairchild	**54LS379**	★ **614** 864-331
	Motorola	**SN54LS379**	★ **1126** 864-333
	SGS	T54LS379	864-335
	TI	**SN54LS379**	★ **715** 864-337
54LS38	**Fairchild**	**54LS38**	★ **612** 871-103
	Motorola	**SN54LS38**	★ **1122** 871-107
	National	DM54LS38	871-109
	SGS	54LS38	871-195
	Signetics	54LS38	871-112
	TI	**SN54LS38**	★ **715** 871-114
54LS380	**MMI**	**SN54LS380**	★ **1100** 882-112
	National	DM54LS380	882-114
54LS381	**TI**	**SN54LS381A**	★ **715** 855-66
54LS382	**TI**	**SN54LS382**	★ **716** 855-67
54LS384	AMD	SN54LS384	855-149
54LS385	AMD	SN54LS385	854-10
	Motorola	**SN54LS385**	★ **1132** 854-12
	TI	**SN54LS385**	★ **716** 854-14
54LS386	Fairchild	54LS386	874-114
	Motorola	**SN54LS386**	★ **1123** 874-121
	National	DM54LS386	874-125
	TI	**SN54LS386A**	★ **716** 874-134
54LS388	AMD	SN54LS388	864-313
54LS390	Fairchild	54LS390	861-32
	Motorola	**SN54LS390**	★ **1127** 861-39
	National	DM54LS390	861-43
	SGS	T54LS390	861-47
	Signetics	54LS390	861-51
	TI	**SN54LS390**	★ **716** 861-55
54LS393	Fairchild	54LS393	859-28
	Motorola	**SN54LS393**	★ **1127** 859-32
	National	DM54LS393	859-34
	SGS	T54LS393	859-37
	Signetics	54LS393	859-39
	TI	**SN54LS393**	★ **716** 859-41
54LS395	**Fairchild**	**54LS395**	★ **614** 3854-76
	Motorola	**SN54LS395**	★ **1129** 3854-91
	SGS	T54LS395	881-107 3854-102
	Signetics	54LS395A	881-109
	TI	**SN54LS395**	★ **716**
54LS396	**TI**	**SN54LS396**	★ **716** 876-141
54LS398	Fairchild	54LS398	879-99
	Motorola	**SN54LS398**	★ **1129** 879-106
	TI	**SN54LS398**	★ **716** 879-118
54LS399	AMD	SN54LS399	879-96
	Fairchild	54LS399	879-100
	Motorola	**SN54LS399**	★ **1129** 879-107
	TI	**SN54LS399**	★ **716** 879-119
54LS40	**Fairchild**	**54LS40**	★ **612** 870-57
	Motorola	**SN54LS40**	★ **1122** 870-60
	National	DM54LS40	870-62
	SGS	54LS40	870-65
	Signetics	54LS40	870-67
	TI	**SN54LS40**	★ **715** 870-69
54LS42	**Fairchild**	**54LS42**	★ **608** ★ **612** ★ **621** ★ **623** 862-132
	Motorola	**SN54LS42**	★ **1130** 862-136
	National	DM54LS42	862-138 (Continued)
54LS42	SGS	54LS42	862-141
	Signetics	54LS42	862-143
	TI	**SN54LS42**	★ **715** 862-145
54LS442	**TI**	**SN54LS442**	★ **716**
54LS445	Signetics	54LS445	862-85
54LS447	**Fairchild**	**54LS447**	★ **614** 2875-92
54LS450	**MMI**	**SN54LS450**	★ **1100** 880-85
	National	DM54LS450	880-87
54LS451	**MMI**	**SN54LS451**	★ **1100** 878-67
	National	DM54LS451	878-69
54LS453	**MMI**	**SN54LS453**	★ **1100** 879-131
	National	DM54LS453	879-133
54LS460	**MMI**	**SN54LS460**	★ **1100** 886-151
54LS461	**MMI**	**SN54LS461**	★ **1100** 859-94
	National	DM54LS461	859-96
54LS469	**MMI**	**SN54LS469**	★ **1100** 859-120
	National	DM54LS469	814-40
54LS47	**Fairchild**	**54LS47**	★ **612** 2875-102
	Motorola	**SN54LS47**	★ **1130** 2875-112
	National	DM54LS47	2875-117
	TI	**SN54LS47**	★ **715** 2875-126
54LS471	National	DM54LS471	3815-18
54LS48	**Fairchild**	**54LS48**	★ **612** 2875-61
	Motorola	**SN54LS48**	★ **1130** ★ **1131** 2875-73
	National	DM54LS48	2875-78
	TI	**SN54LS48**	★ **715** 2875-86
54LS49	**Fairchild**	**54LS49**	★ **612** 2875-40
	Motorola	**SN54LS49**	★ **1130** 2875-47
	National	DM54LS49	2875-51
	TI	**SN54LS49**	★ **715** 2875-55
54LS490	**Fairchild**	**54LS490**	★ **614** 861-33
	Motorola	**SN54LS490**	★ **1127** 861-40
	SGS	T54LS490	861-48
	Signetics	54LS490	861-52
	TI	**SN54LS490**	★ **716** 861-56
54LS491	**MMI**	**SN54LS491**	★ **1100** 862-54
	National	DM54LS491	862-56
54LS498	**MMI**	**SN54LS498**	★ **1100** 882-110
	National	DM54LS498	882-111
54LS502	**Fairchild**	**54LS502**	★ **614** 888-134
54LS503	**Fairchild**	**54LS503**	★ **614** 888-135
54LS51	**Fairchild**	**54LS51**	★ **608** ★ **612** ★ **621** ★ **623** 872-90
	Motorola	**SN54LS51**	★ **1123** (Continued)

Arranged alphanumerically from left to right.

Base Number	Source	Device	Page-Line
54LS51	Motorola	SN54LS51	872-94
	National	DM54LS51	872-96
	Signetics	54LS51	872-102
	TI	**SN54LS51**	★ **715**
			872-104
54LS533			
	Fairchild	54LS533	876-71
	MMI	SN54LS533	876-75
54LS534			
	Fairchild	54LS534	866-130
	MMI	SN54LS534	866-132
54LS54	**Fairchild**	**54LS54**	★ **608**
			★ **612**
			★ **621**
			★ **623**
			872-169
	Motorola	**SN54LS54**	★ **1123**
			872-172
	National	DM54LS54	872-174
	SGS	54LS54	872-177
	Signetics	54LS54	872-179
	TI	**SN54LS54**	★ **715**
			872-181
54LS540			
	Fairchild	54LS540	2882-44
	Motorola	**SN54LS540**	★ **1125**
			883-159
			2882-55
	Signetics	54LS540	2882-60
	TI	**SN54LS540**	★ **716**
54LS541			
	Fairchild	54LS541	2881-58
	Motorola	**SN54LS541**	★ **1125**
			884-43
			2882-17
	Signetics	54LS541	884-49
	TI	**SN54LS541**	★ **716**
54LS546			
	MMI	SN54LS546	882-21
54LS547			
	MMI	SN54LS547	875-156
54LS548			
	MMI	**SN54LS548**	★ **1110**
			844-98
54LS549			
	MMI	**SN54LS549**	★ **1110**
			876-93
54LS55	**Fairchild**	**54LS55**	★ **612**
			872-135
	Motorola	**SN54LS55**	★ **1123**
			872-138
	National	DM54LS55	872-140
	SGS	54LS55	872-143
54LS566			
	MMI	SN54LS566	882-19
54LS567			
	MMI	SN54LS567	875-153
54LS568			
	Motorola	**SN54LS568**	★ **1127**
			861-113
54LS569			
	Motorola	**SN54LS569**	★ **1127**
			860-12
54LS590			
	TI	**SN54LS590**	★ **716**
			859-102
54LS592			
	TI	**SN54LS592**	★ **716**
			859-98
54LS593			
	TI	**SN54LS593**	★ **716**
			859-99
54LS595			
	TI	**SN54LS595**	★ **716**
			882-95
54LS597			
	TI	**SN54LS597**	★ **716**
			882-83
54LS598			
	TI	**SN54LS598**	★ **716**
			882-84
54LS604			
	Motorola	**SN54LS604**	★ **1129**
			875-111
54LS605			
	Motorola	**SN54LS605**	★ **1129**
			875-112
54LS606			
	Motorola	**SN54LS606**	★ **1129**
			875-113
54LS607			
	Motorola	**SN54LS607**	★ **1129**
			875-114
54LS610			
	TI	**SN54LS610**	★ **729**
			887-35
			¶ 369-7
54LS611			
	TI	SN54LS611	¶ 369-7
54LS612			
	TI	SN54LS612	¶ 369-7
54LS613			
	TI	SN54LS613	¶ 369-7
54LS620			
	Motorola	**SN54LS620**	★ **1125**
	Signetics	54LS620	886-104
54LS621			
	Motorola	**SN54LS621**	★ **1125**
			886-56
	Signetics	54LS621	886-60
54LS622			
	Motorola	**SN54LS622**	★ **1125**
			886-57
	Signetics	54LS622	886-61
54LS623			
	Motorola	**SN54LS623**	★ **1125**
			886-101
	Signetics	54LS623	886-105
	TI	**SN54LS623**	★ **716**
54LS624			
	TI	**SN54LS624**	★ **716**
54LS626			
	TI	**SN54LS626**	★ **716**
54LS629			
	TI	**SN54LS629**	★ **716**
54LS63	**TI**	**SN54LS63**	★ **715**
			888-20
54LS630			
	Intech	SN54LS630	¶ 400-9
	TI	**SN54LS630**	★ **716**
			★ **729**
			887-12
			¶ 435-11
			★ **716**
			★ **729**
			2878-53
54LS631			
	Intech	SN54LS631	¶ 400-9
	TI	SN54LS631	¶ 435-11
54LS640			
	Motorola	**SN54LS640**	★ **1125**
			885-14
			2890-46
	Signetics	54LS640	885-18
	TI	**SN54LS640**	★ **716**
54LS641			
	Motorola	**SN54LS641**	★ **1125**
			885-49
			2890-42
	Signetics	54LS641	885-51
			2889-57
	TI	**SN54LS641**	★ **716**
54LS642			
	Motorola	**SN54LS642**	★ **1125**
			884-144
			2890-43
	Signetics	54LS642	2889-58
	TI	**SN54LS642**	★ **716**
54LS643			
	Motorola	**SN54LS643**	★ **1125**
			885-15
54LS644			
	Motorola	**SN54LS644**	★ **1125**
			885-142
	TI	**SN54LS644**	★ **716**
54LS645			
	MMI	SN54LS645	885-108
			2890-7
		SN54LS645-1	2890-8
	Motorola	**SN54LS645**	★ **1125**
			885-110
			2890-47
	Signetics	54LS645	885-117
	TI	**SN54LS645**	★ **716**
54LS646			
	MMI	**SN54LS646**	★ **1108**
			885-132
54LS647			
	MMI	**SN54LS647**	★ **1108**
			885-128
54LS648			
	MMI	**SN54LS648**	★ **1108**
			885-28
54LS649			
	MMI	**SN54LS649**	★ **1108**
			884-140
54LS651			
	MMI	**SN54LS651**	★ **1109**
			885-29
54LS652			
	MMI	**SN54LS652**	★ **1109**
			885-133
54LS653			
	MMI	**SN54LS653**	★ **1109**
			884-141
54LS654			
	MMI	**SN54LS654**	★ **1109**
			885-129
54LS668			
	Motorola	**SN54LS668**	★ **1127**
			861-96
	TI	**SN54LS668**	★ **716**
			861-107
54LS669			
	Motorola	**SN54LS669**	★ **1127**
			860-54
	TI	**SN54LS669**	★ **716**
			859-150
54LS670			
	Fairchild	**54LS670**	★ **614**
			877-17
			3830-93
	Motorola	**SN54LS670**	★ **1128**
			877-21
			3830-97
	National	DM54LS670	877-23
			3830-99
	SGS	54LS670	877-25
	Signetics	54LS670	877-27
			3830-102
	TI	**SN54LS670**	★ **716**
54LS673			
	Motorola	**SN54LS673**	★ **1129**
			883-24
	TI	**SN54LS673**	★ **716**
			883-26
54LS674			
	Motorola	**SN54LS674**	★ **1129**
			883-11
	TI	**SN54LS674**	★ **716**
			883-13
54LS681			
	TI	**SN54LS681**	★ **716**
			855-168
54LS682			
	Motorola	**SN54LS682**	★ **1131**
			854-136
	TI	**SN54LS682**	★ **716**
			854-144
54LS683			
	Motorola	**SN54LS683**	★ **1131**
			854-117
	TI	**SN54LS683**	★ **716**
			854-125
54LS684			
	Motorola	**SN54LS684**	★ **1131**
			854-137
	TI	**SN54LS684**	★ **716**
			854-145
54LS685			
	Motorola	**SN54LS685**	★ **1132**
			854-118
	TI	**SN54LS685**	★ **716**
			854-126
54LS686			
	Motorola	**SN54LS686**	★ **1132**
			854-138
54LS687			
	Motorola	**SN54LS687**	★ **1132**
			854-119
54LS688			
	Motorola	**SN54LS688**	★ **1131**
			854-139
	TI	**SN54LS688**	★ **716**
			854-146
54LS689			
	Motorola	**SN54LS689**	★ **1132**
			854-120
	TI	**SN54LS689**	★ **716**
			854-127
54LS691			
	TI	**SN54LS691**	★ **716**
			858-113
54LS693			
	TI	**SN54LS693**	★ **716**
			858-114
54LS696			
	TI	**SN54LS696**	★ **716**
			861-66
54LS697			
	TI	**SN54LS697**	★ **716**
			859-105
54LS699			
	TI	**SN54LS699**	★ **716**
			859-106
54LS716			
	Motorola	**SN54LS716**	★ **1128**
			862-42
54LS718			
	Motorola	**SN54LS718**	★ **1128**
			862-36
54LS724			
	Motorola	**SN54LS724**	★ **1131**
54LS73	**Motorola**	**SN54LS73A**	★ **1126**
			868-3
	National	DM54LS73A	868-7
	Signetics	54LS73	868-13
	TI	**SN54LS73A**	★ **715**
			868-17
54LS74	**Fairchild**	**54LS74**	★ **608**
			★ **612**
			★ **621**
			★ **623**
			864-236
	Motorola	**SN54LS74A**	★ **1126**
			864-240
	National	DM54LS74	864-242
	SGS	54LS74	864-245
	Signetics	54LS74A	864-247
	TI	**SN54LS74A**	★ **715**
			864-249
54LS748			
	Motorola	**SN54LS748**	★ **1131**
			888-160
54LS75	**Motorola**	**SN54LS75**	★ **1126**
			875-47
	National	DM54LS75	875-50
	Signetics	54LS75	875-54
	TI	**SN54LS75**	★ **715**
			875-58
54LS76	**Motorola**	**SN54LS76A**	★ **1126**
			868-34
	National	DM54LS76	868-36
	Signetics	54LS76	868-39
	TI	**SN54LS76A**	★ **715**
			868-41
54LS764			
	Signetics	54LS764	2892-100
54LS77	**Motorola**	**SN54LS77**	★ **1126**
			875-64
54LS78	**Motorola**	**SN54LS78A**	★ **1126**
			867-144
	National	DM54LS78	867-146
	TI	**SN54LS78A**	★ **715**
			867-149
54LS793			
	MMI	**SN54LS793**	★ **1111**
			875-158
54LS794			
	MMI	**SN54LS794**	★ **1111**
			882-23
54LS795			
	Motorola	**SN54LS795**	★ **1124**
			857-56
54LS796			
	Motorola	**SN54LS796**	★ **1125**
			857-57

¶ Indicates page number in Application Note Directory.
★ Indicates additional data is provided on the page noted.

Base Number	Source	Device	Page-Line
54LS797			
	Motorola	**SN54LS797**	★ **1125** 857-58
54LS798			
	Motorola	**SN54LS798**	★ **1125** 857-59
54LS83	**Fairchild**	**54LS83A**	★ **608** ★ **612** ★ **621** ★ **623** 856-38
	Motorola	**SN54LS83A**	★ **1132** 856-45
	National	DM54LS83A	856-49
	SGS	54LS83A	856-55
	Signetics	54LS83A	856-59
	TI	**SN54LS83A**	★ **715** 856-63
54LS848			
	Motorola	**SN54LS848**	★ **1131** 888-175
54LS85	**Fairchild**	**54LS85**	★ **608** ★ **612** ★ **621** ★ **623** 854-44
	Motorola	**SN54LS85**	★ **1131** 854-54
	National	DM54LS85	854-57
	SGS	54LS85	854-61
	Signetics	54LS85	854-64
	TI	**SN54LS85**	★ **715** 854-69
54LS86	Fairchild	54LS86	874-115
	Motorola	**SN54LS86**	★ **1123** 874-122
	National	DM54LS86	874-126
	SGS	54LS86	874-130
	Signetics	54LS86	874-132
	TI	**SN54LS86A**	★ **715** 874-135
54LS89	Fairchild	54LS89	3831-83
54LS90	Fairchild	54LS90	860-73
	Motorola	**SN54LS90**	★ **1127** 860-79
	National	DM54LS90	860-83
	SGS	54LS90	860-89
	Signetics	54LS90	860-93
	TI	**SN54LS90**	★ **715** 860-97
54LS91	**Motorola**	**SN54LS91**	★ **1128** 882-106
	TI	**SN54LS91**	★ **715**
54LS92	Fairchild	54LS92	862-15
	Motorola	**SN54LS92**	★ **1127** 862-19
	National	DM54LS92	862-21
	SGS	54LS92	862-24
	Signetics	54LS92	862-26
	TI	**SN54LS92**	★ **715** 862-28
54LS93	Fairchild	54LS93	859-62
	Motorola	**SN54LS93**	★ **1127** 859-69
	National	DM54LS93	859-73
	SGS	54LS93	859-79
	Signetics	54LS93	859-83
	TI	**SN54LS93**	★ **715** 859-87
54LS95	**Fairchild**	**54LS95B**	★ **608** ★ **612** ★ **621** ★ **623** 881-74 ★ **608** ★ **612** ★ **621** ★ **623** 3854-77
	Motorola	**SN54LS95B**	★ **1128** 881-78 3854-92
	SGS	54LS95B	881-81
	Signetics	54LS95B	881-83
	TI	**SN54LS95**	★ **715**
54LS96	Signetics	54LS96	881-159 3855-49
	TI	**SN54LS96**	★ **715**
54S00	Fairchild	54S00	871-38
	National	DM54S00	871-41
	Signetics	54S00	871-43
	TI	**SN54S00**	★ **716** 871-45
54S02	Fairchild	54S02	874-43
	National	DM54S02	874-45
	Signetics	54S02	874-47
	TI	**SN54S02**	★ **716** 874-49
54S03	National	DM54S03	871-193
	Signetics	54S03	871-197
	TI	**SN54S03**	★ **716** 871-199
54S04	Fairchild	54S04	857-128
	National	DM54S04	857-131
	Signetics	54S04	857-133
	TI	**SN54S04**	★ **716** 857-135
54S05	Fairchild	54S05	857-175
	National	DM54S05	857-177
	Signetics	54S05	857-179
	TI	**SN54S05**	★ **716** 857-181
54S08	Fairchild	54S08	869-123
	National	DM54S08	869-126
	Signetics	54S08	869-128
	TI	**SN54S08**	★ **716** 869-130
54S09	Fairchild	54S09	869-162
	National	DM54S09	869-163
	TI	**SN54S09**	★ **716** 869-164
54S10	Fairchild	54S10	870-155
	National	DM54S10	870-158
	Signetics	54S10	870-160
	TI	**SN54S10**	★ **716** 870-162
54S109	Fairchild	54S109	867-139
54S11	Fairchild	54S11	869-39
	National	DM54S11	869-41
	Signetics	54S11	869-43
	TI	**SN54S11**	★ **716** 869-45
54S112	Fairchild	54S112	868-103
	National	DM54S112	868-106
	Signetics	54S112	868-108
	TI	**SN54S112**	★ **716** 868-110
54S113	Fairchild	54S113	868-67
	National	DM54S113	868-69
	Signetics	54S113	868-71
	TI	**SN54S113**	★ **716** 868-73
54S114	Fairchild	54S114	868-133
	TI	**SN54S114**	★ **716** 868-134
54S124	**TI**	**SN54S124**	★ **716** 3376-47
54S13	Signetics	54S13	887-129
54S132	Fairchild	54S132	888-13
	TI	**SN54S132**	★ **716** 888-15
54S133	Fairchild	54S133	872-64
	National	DM54S133	872-66
	Signetics	54S133	872-68
	TI	**SN54S133**	★ **716** 872-70
54S134	Fairchild	54S134	872-46
	National	DM54S134	872-48
	Signetics	54S134	872-50
	TI	**SN54S134**	★ **716** 872-52
54S135	Fairchild	54S135	874-51
	National	DM54S135	874-53
	Signetics	54S135	874-55
	TI	**SN54S135**	★ **716** 874-57
54S137	Fairchild	54S137	863-158
54S138	Fairchild	54S138	863-130
	National	DM54S138	863-133
	Signetics	54S138	863-135 (Continued)
54S138	**TI**	**SN54S138**	★ **716** 863-137
54S139	Fairchild	54S139	863-29
	National	DM54S139	863-32
	Signetics	54S139	863-34
	TI	**SN54S139**	★ **716** 863-36
54S140	Fairchild	54S140	864-9 2883-28
	National	DM54S140	864-11
	Signetics	54S140	864-13 2883-33
	TI	**SN54S140**	★ **716**
54S148	**MMI**	**SN54S148**	★ **1103** 888-165
	Motorola	SN54S148	888-167
54S15	Fairchild	54S15	869-65
	National	DM54S15	869-67
	TI	**SN54S15**	★ **716** 869-69
54S151	Fairchild	54S151	880-7
	National	DM54S151	880-11
	Signetics	54S151	880-13
	TI	**SN54S151**	★ **716** 880-15
54S153	Fairchild	54S153	877-153
	National	DM54S153	877-155
	Signetics	54S153	877-157
	TI	**SN54S153**	★ **716** 878-1
54S157	Fairchild	54S157	879-23
	National	DM54S157	879-26
	Signetics	54S157	879-28
	TI	**SN54S157**	★ **716** 879-30
54S158	Fairchild	54S158	878-107
	National	DM54S158	878-109
	Signetics	54S158	878-111
	TI	**SN54S158**	★ **716** 878-113
54S160	AMD	SN54S160	860-175
54S161	AMD	SN54S161	858-168
54S162	**TI**	**SN54S162**	★ **716** 861-27
54S163	**TI**	**SN54S163**	★ **716** 859-22
54S167	Fairchild	54S167	887-72
54S168	Signetics	54S168A	861-104
	TI	**SN54S168**	★ **716** 861-109
54S169	Signetics	54S169A	859-153
	TI	**SN54S169**	★ **716** 859-155
54S172	Signetics	54S172	877-31
54S174	Fairchild	54S174	866-65
	National	DM54S174	866-67
	Signetics	54S174	866-69
	TI	**SN54S174**	★ **716** 866-71
54S175	Fairchild	54S175	864-297
	National	DM54S175	864-299
	Signetics	54S175	864-301
	TI	**SN54S175**	★ **716** 864-303
54S181	Signetics	54S181	855-75
	TI	**SN54S181**	★ **716** 855-77
54S182	MMI	SN54S182	855-112
	Signetics	54S182	855-117
	TI	**SN54S182**	★ **716** 855-119
54S188	National	DM54S188	3814-44
54S189	AMD	SN54S189	3831-73
	Cypress	CY54S189	3831-40
	Fairchild	54S189	3831-74
	National	DM54S189	3831-75
		DM54S189A	3831-37
	Signetics	54S189	3831-77
54S194	Fairchild	54S194	881-146 3854-115
	National	DM54S194	881-148
	TI	**SN54S194**	★ **716**
54S195	National	DM54S195	881-57
	Signetics	54S195	881-59
	TI	**SN54S195**	★ **716**
54S196	**TI**	**SN54S196**	★ **716** 860-131
54S197	**TI**	**SN54S197**	★ **716** 858-111
54S20	Fairchild	54S20	870-27
	National	DM54S20	870-29
	Signetics	54S20	870-31
	TI	**SN54S20**	★ **716** 870-33
54S210	MMI	SN54S210	858-67 883-123
54S22	Fairchild	54S22	870-101
	National	DM54S22	870-103
	TI	**SN54S22**	★ **716** 870-105
54S226	**TI**	**SN54S226**	★ **716** 888-97
54S240	National	DM54S240	2882-58
	Signetics	54S240	883-171
	TI	**SN54S240**	★ **716**
54S241	National	DM54S241	2882-21
	Signetics	54S241	884-55
	TI	**SN54S241**	★ **716**
54S242	National	DM54S242	883-94
	Signetics	54S242	883-86
54S243	National	DM54S243	883-95
	Signetics	54S243	883-87
54S244	MMI	SN54S244	2882-10
	Signetics	54S244	884-96
	TI	**SN54S244**	★ **716**
54S251	National	DM54S251	880-64
	Signetics	54S251	880-67
	TI	**SN54S251**	★ **716** 880-69
54S253	Fairchild	54S253	878-60
	National	DM54S253	878-62
	Signetics	54S253	878-64
54S257	National	DM54S257	879-63
	Signetics	54S257	879-65
	TI	**SN54S257**	★ **716** 879-67
54S258	Fairchild	54S258	878-149
	National	DM54S258	878-151
	Signetics	54S258	878-153
	TI	**SN54S258**	★ **716** 878-155
54S260	Fairchild	54S260	865-27
	Signetics	54S260	865-30
	TI	**SN54S260**	★ **716** 865-32
54S273	MMI	SN54S273	866-162
	Signetics	54S273	866-163
54S280	Fairchild	54S280	889-31
	National	DM54S280	889-35
	Signetics	54S280	889-37
	TI	**SN54S280**	★ **716** 889-40
54S281	**TI**	**SN54S281**	★ **716** 855-171
54S283	**TI**	**SN54S283**	★ **716** 856-66
54S287	National	DM54S287	3814-118
54S288	National	DM54S288	3814-45
54S289	AMD	SN54S289	3831-66
	Fairchild	54S289	3831-68
	National	DM54S289	3831-69
54S299	National	DM54S299	882-151
	TI	**SN54S299**	★ **716**
54S30	Fairchild	54S30	872-40
	National	DM54S30	872-42
	TI	**SN54S30**	★ **716** 872-44
54S301	Signetics	54S301	3832-76
54S32	Fairchild	54S32	873-66
	National	DM54S32	873-69
	Signetics	54S32	873-71
	TI	**SN54S32**	★ **716** 873-73
54S348	**MMI**	**SN54S348**	★ **1103** 888-172
	Motorola	SN54S348	888-174
54S350	AMD	SN54S350	843-117
	Signetics	54S350	843-126
54S37	Signetics	54S37	871-78
	TI	**SN54S37**	★ **716** 871-80

Arranged alphanumerically from left to right.

Base Number	Source	Device	Page-Line
54S373	MMI	SN54S373	876-33
	National	DM54S373	876-34
	Signetics	54S373	876-36
	TI	**SN54S373**	**★ 716**
			876-38
54S374	MMI	SN54S374	867-27
	National	DM54S374	867-30
	Signetics	54S374	867-32
	TI	**SN54S374**	**★ 716**
			867-34
54S377	MMI	SN54S377	867-51
54S378	AMD	SN54S378	866-96
54S379	AMD	SN54S379	864-341
54S38	Signetics	54S38	871-116
	TI	**SN54S38**	**★ 716**
			871-118
54S381	**MMI**	**SN54S381**	**★ 1103**
			855-73
	TI	**SN54S381**	**★ 716**
			855-78
54S382	**MMI**	**SN54S382**	**★ 1103**
			855-113
54S387	National	DM54S387	3814-115
54S388	AMD	SN54S388	864-317
54S399	AMD	SN54S399	879-125
54S40	Fairchild	54S40	870-71
	National	DM54S40	870-73
	Signetics	54S40	870-75
	TI	**SN54S40**	**★ 716**
			870-77
54S408	MMI	SN54S408	2892-83
		SN54S408-2	2892-84
54S409	MMI	SN54S409	2892-89
		SN54S409-2	2892-90
		SN54S409-3	2892-91
54S472	National	DM54S472	3816-30
		DM54S472A	3816-31
		DM54S472B	3816-32
54S473	National	DM54S473	3816-44
		DM54S473A	3816-24
54S474	National	DM54S474	3816-58
		DM54S474A	3816-33
		DM54S474B	3816-34
54S475	National	DM54S475	3816-46
		DM54S475A	3816-27
54S508	MMI	SN54S508	854-1
54S51	Fairchild	54S51	872-106
	National	DM54S51	872-109
	Signetics	54S51	872-111
	TI	**SN54S51**	**★ 716**
			872-113
54S516	MMI	SN54S516	855-124
54S533	MMI	SN54S533	876-79
54S534	MMI	SN54S534	866-135
	Signetics	54S534	866-138
54S556	**MMI**	**SN54S556**	**★ 1103**
			★ 1119
			843-72
54S557	MMI	SN54S557	843-33
54S558	MMI	SN54S558	843-34
54S570	National	DM54S570	3815-57
		DM54S570A	3815-58
54S571	National	DM54S571	3815-59
		DM54S571A	3815-60
		DM54S571B	3815-61
54S572	National	DM54S572	3817-40
		DM54S572A	3817-24
54S573	National	DM54S573	3817-41
		DM54S573A	3817-25
		DM54S573B	3817-14
54S64	Fairchild	54S64	873-7
	National	DM54S64	873-9
	Signetics	54S64	873-11
	TI	**SN54S64**	**★ 716**
			873-13
54S65	Fairchild	54S65	873-15
	National	DM54S65	873-17
	Signetics	54S65	873-19
	TI	**SN54S65**	**★ 716**
			873-20
54S700	**MMI**	**SN54S700**	**★ 1104**
			2893-28
54S730	MMI	54S730	1449-66
		SN54S730	**★ 1104**
			2893-29
54S731	**MMI**	**SN54S731**	**★ 1104**
			2893-30
54S734	MMI	54S734	1449-67
		SN54S734	**★ 1104**
			2893-31
54S74	Fairchild	54S74	864-251
	Signetics	54S74	864-255
	TI	**SN54S74**	**★ 716**
			864-257
54S818	MMI	SN54S818	876-139
			881-9
54S85	Signetics	54S85	854-76
	TI	**SN54S85**	**★ 716**
			854-78
54S86	Fairchild	54S86	874-138
	Signetics	54S86	874-141
	TI	**SN54S86**	**★ 716**
			874-143
54SL170			
	Motorola	SN54SL170	877-8
54THCT1010			
	TI	SN54THCT1010-100	
			808-16
		SN54THCT1010-140	
			808-17
55	Amperex	BGY55A	3324-68
	Burr-Brown	**PCM55H**	**★ 3147**
			2872-44
		PCM55J	**★ 3147**
			2872-45
	Western	WD55	1411-7
550	Harris	HC-550X	¶ 413-16
	Intersil	MM550	2828-90
	LTI	LC550	3307-38
			3316-78
	National	CIM-550	2030-26
		MM550	¶ 401-13
	Plessey	SL550	3308-6
	SGS	TAA550A	3317-8
	Sharp	SM550	1450-83
			1413-8
	SiliconSys	**SSI550**	**★ 3736**
			2896-103
5500	Plessey	CLA5500	4453-45
	Siemens	SDA5500	3327-52
		TDA5500	3327-61
55001	Harris	HI055001-6	3400-93
5501	**Goldstar**	**GL5501**	**★ 3580**
			3319-42
	MicroPwr	MP5501A	3343-31
		MP5501C	3353-9
		MP5501E	3346-79
		MP5501F	3346-80
		MP5501G	3353-10
		MP5501H	3343-32
	TI	TMS5501	1457-214
			¶ 381-17
			¶ 382-3
	Toshiba	TC5501	3833-110
5502	Harris	HC-5502A	¶ 410-13
		HC5502A	**★ 3597**
			3381-59
	MicroPwr	MP5502	3330-22
			3346-84
		MP5502A	3343-7
		MP5502B	3353-16
		MP5502D	3353-17
		MP5502E	3343-8
5504	**Harris**	**HC5504**	**★ 3597**
			3381-60
			¶ 410-13
	Toshiba	**TC5504A-2**	**★ 4263**
			3840-54
		TC5504A-3	**★ 4263**
			3840-82
		TC5504AL-2	**★ 4263**
			3840-55
		TC5504AL-3	**★ 4263**
			3840-83
5505	MicroPwr	MP5505A	3332-27
			3341-55
			3340-13
		MP5505B	3342-44
		MP5505C	3345-11
		MP5505E	3342-48
5507	MicroPwr	MP5507A	3341-14
			3335-39
		MP5507B	3338-37
		MP5507C	3357-212
		MP5507D	3340-25
		MP5507E	3341-15
			3338-49
5508	**Harris**	**HC5508**	**★ 3597**
			3381-61
	MicroPwr	MP5508	3340-77
5509	MicroPwr	MP5509A	3369-36
		MP5509E	3369-37
	OKI	MSM5509	3320-94
551	**Datel**	**AM-551**	**★ 3158**
			★ 3160
			★ 3163
	Intersil	MM551	2828-81
	National	CIM-551	2030-27
		MM551	¶ 401-13
	Sharp	SM551	1450-84
			1413-9
5510	**Harris**	**HC5510**	**★ 3595**
			3377-142
	MicroPwr	MP5510A	3341-64
		MP5510B	3341-65
		MP5510C	3362-27
		MP5510E	3341-66
	Siemens	TDA5510	3327-62
55107	Intech	SN55107	¶ 398-12
	Motorola	MC55107	2886-20
	National	DS55107	2886-22
			2886-35
	TI	**SN55107A**	**★ 721**
			2886-24
		SN55107B	**★ 721**
			2886-37
55108	Motorola	MC55108	2886-26
	National	DS55108	2886-28
			2886-40
	TI	**SN55108A**	**★ 721**
			2886-30
		SN55108B	**★ 721**
			2886-42
55109	**TI**	**SN55109A**	**★ 721**
			2883-47
5511	**Harris**	**HC5511**	**★ 3595**
			3377-46
	MicroPwr	MP5511A	3369-38
		MP5511E	3369-39
55110	**TI**	**SN55110A**	**★ 721**
			2883-51
55113	National	DS55113	2883-41
	TI	**SN55113**	**★ 721**
			2883-43
55114	National	DS55114	2883-23
	TI	**SN55114**	**★ 721**
			2883-25
55115	National	DS55115	2886-58
	TI	**SN55115**	**★ 721**
			2887-1
55116	**TI**	**SN55116**	**★ 721**
			2891-29
55117	**TI**	**SN55117**	**★ 721**
			2891-35
55118	**TI**	**SN55118**	**★ 721**
			2891-31
55119	**TI**	**SN55119**	**★ 721**
			2891-33
5512	**Harris**	**HC5512**	**★ 3596**
			3379-63
		HC5512A	**★ 3596**
			3379-64
		HC5512C	**★ 3596**
			3379-65
		HC5512D	**★ 3596**
			3379-66
	Signetics	**NE5512**	**★ 3729**
			3330-10
			3365-17
		SE5512	**★ 3729**
			3330-12
			3363-50
55121	National	DS55121	2881-4
	TI	**SN55121**	**★ 721**
			2881-8
55122	National	DS55122	2885-13
	TI	**SN55122**	**★ 721**
			2885-15
5513	Toshiba	TC5513A-20	3836-60
55138	**TI**	**SN55138**	**★ 721**
			2889-26
5514	**Signetics**	**NE5514**	**★ 3729**
			3330-11
		SE5514	**★ 3729**
			3330-13
	Toshiba	**TC5514A-2**	**★ 4263**
			3836-61
		TC5514A-3	**★ 4263**
			3836-93
		TC5514AL-2	**★ 4263**
			3836-62
		TC5514AL-3	**★ 4263**
			3836-94
55150	**TI**	**SN55150**	**★ 722**
55152	**TI**	**SN55152**	**★ 722**
55154	Fairchild	55154	2885-48
	TI	**SN55154**	**★ 722**
55156	**TI**	**SN55156**	**★ 722**
55157	TI	SN55157	2886-51
5516	Rockwell	R5516A-25	3812-43
		R5516A-3	3812-69
		R5516A-35	3812-92
	SEEQ	**5516A-250**	**★ 4146**
			3812-48
		5516A-300	**★ 4146**
			3812-72
	Toshiba	**TC5516A**	**★ 4263**
			3839-38
		TC5516A-2	**★ 4263**
			3839-6
		TC5516AL	**★ 4263**
			3839-39
		TC5516AL-2	**★ 4263**
			3839-7
55160	**TI**	**SN55160**	**★ 722**
55161	**TI**	**SN55161**	**★ 722**
5517	**SEEQ**	**5517A**	**★ 4148**
			3812-30
		5517A-250	**★ 4148**
			3812-56
		5517A-300	**★ 4148**
			3812-81
		5517AH	**★ 4148**
			3812-31
		5517AH-250	**★ 4148**
			3812-63
		5517AH-300	**★ 4148**
			3812-82
	Signetics	**NE5517**	**★ 3711**
			★ 3722
			★ 3729
			3365-18
		NE5517A	**★ 3711**
			★ 3722
			★ 3729
			3365-19
	TI	SMJ5517	¶ 372-6
		SN5517	**★ 726**
	Toshiba	**TC5517A**	**★ 4263**
			3839-40
		TC5517A-2	**★ 4263**
			3839-8
		TC5517AL	**★ 4263**
			3839-41
		TC5517AL-2	**★ 4263**
			3839-9
		TC5517B-20	**★ 4263**
			3839-10
		TC5517B-25	**★ 4263**
			3839-42
		TC5517BL-20	**★ 4263**
			3839-11
		TC5517BL-25	**★ 4263**
			3839-43
		TC5517C-20	**★ 4263**
			3839-12
55172	**TI**	**SN55172**	**★ 722**
55173	**TI**	**SN55173**	**★ 722**
			2887-41
55174	**TI**	**SN55174**	**★ 722**
55176	**TI**	**SN55176**	**★ 722**

¶ Indicates page number in Application Note Directory.
★ Indicates additional data is provided on the page noted.

Base Number	Source	Device	Page-Line
55177	**TI**	**SN55177**	★ 722
55178	**TI**	**SN55178**	★ 722
55179	**TI**	**SN55179**	★ 722
5518	**Toshiba**	**TC5518B-20**	★4263 3839-13
		TC5518B-25	★4263 3839-44
		TC5518BL-20	★4263 3839-14
		TC5518BL-25	★4263 3839-45
		TC5518C-20	★4263 3839-15
55180	TI	SN55180	886-140
55182	**TI**	**SN55182**	★ 721 2887-5
55183	**TI**	**SN55183**	★ 721 2883-35
55188	**TI**	**SN55188**	★ 722 2881-48
55189	**TI**	**SN55189**	★ 722 2885-25
		SN55189A	★ 722 2885-34
5519	**Signetics**	**SE5519**	★3725
552	Intersil	MM552	2828-66
	National	MM552	¶ 401-13
	Sharp	SM552	1450-85 1413-10
5520	**MicroPwr**	**MP5520A**	★ 688 ★3206 2849-30
		MP5520B	★ 688 ★3206 2849-31
		MP5520C	★ 688 ★3206 2849-32
		MP5520D	★ 688 ★3206 2850-1
		MP5520F	★ 688 ★3206 2849-33
		MP5520H	★ 688 ★3206 2849-34
	Signetics	**NE5520**	★3725 2896-7
5521	**Signetics**	**NE5521**	★3692 ★3725
		SE5521	★3692 ★3725
5522	Harris	HC5522	3381-50
5523	OKI	MSM5523	3320-107
55234	**TI**	**SN55234**	★ 722 2899-7
5525	Harris	HC5525	3381-51
	OKI	MSM5525	3320-108 3321-75
55257	**Toshiba**	**TC55257**	★4263
5526	OKI	MSM5526	3321-63
5527	MicroPwr	MP5527	3335-26
5528	OKI	MSM5528	3320-95
553	NEC	μPB553A	3375-101
5532	Exar	XR5532	3363-88
		XR5532A	3363-89
	Signetics	**NE5532**	★3720 3363-92
		NE5532A	★3720 3363-93
		SE5532	★3721 ★3729 3363-35
		SE5532A	★3721 ★3729 3363-36
55325	National	DS55325	2892-39
	TI	**SN55325**	★ 722 2892-42
55326	**TI**	**SN55326**	★ 722 2892-46
55327	**TI**	**SN55327**	★ 722 2892-47
5533	**Exar**	**XR5533**	★3556 3363-90
			(Continued)
5533	**Exar**	**XR5533A**	★3556 3363-91
	Signetics	**NE5533**	★3708 ★3729 3363-94
		NE5533A	★3708 ★3729 3363-95
5534	**Exar**	**XR5534**	★3557 3350-43
		XR5534A	★3557 3350-44
		XR5534C	★3557 3350-45
		XR5534M	★3557 3346-131
	Raytheon	RC5534	3350-46
		RM5534	★3666 3346-132
	Signetics	**NE5534**	★3708 ★3720 ★3729 3350-47
		NE5534A	★3708 ★3720 ★3729 3350-48
		SA5534	★3708
		SE5534	★3708 ★3720 ★3729 3346-133
		SE5534A	★3708 ★3720 ★3729 3346-134
	TI	**SE5534**	★ 718
5535	**Signetics**	**NE5535**	★3707 ★3729 3366-50
		SE5535	★3707 ★3729 3363-74
55363	**TI**	**SN55363**	★ 722
55365	**TI**	**SN55365**	★ 722 2892-141
55369	TI	SN55369	2892-119
5537	MicroPwr	MP5537	3335-27
	Signetics	**NE5537**	★3692 ★3720 3404-78
		SE5537	★3692 ★3720 3404-79
5539	**Signetics**	**NE5539**	★3710 ★3729 3334-253 3354-32 ¶ 404-3
		SE5539	★3710 ★3729 3334-254 3354-33 ¶ 404-3
5540	MicroPwr	MP5540	3402-52
55426	**TI**	**SN55426B**	★ 720 2876-34
55427	**TI**	**SN55427B**	★ 720 2876-35
55450	National	DS55450	2896-122
	SiliconG	SG55450	2896-129
		SG55450B	2896-130
	TI	**S55450**	★ 721
		SN55450B	★ 721 ★ 722 2897-5
55451	National	DS55451	2896-123
	SiliconG	SG55451	2896-131
	TI	**SN55451B**	★ 721 ★ 722 2897-6
55452	National	DS55452	2897-38
	SiliconG	SG55452	2897-42
	TI	**SN55452B**	★ 722 2897-46
55453	National	DS55453	2897-100
	SiliconG	SG55453	2897-104
	TI	**SN55453B**	★ 722 2897-108
55454	National	DS55454	2897-70
	SiliconG	SG55454	2897-74
	TI	**SN55454B**	★ 722 2897-78
55460	SiliconG	SG55460	2896-132
		SG55460B	2896-133
55461	National	DS55461	2896-124
	SiliconG	SG55461	2896-134
	TI	**SN55461**	★ 722 2897-7
55462	National	DS55462	2897-39
	SiliconG	SG55462	2897-43
	TI	**SN55462**	★ 722 2897-47
55463	National	DS55463	2897-101
	SiliconG	SG55463	2897-105
	TI	**SN55463**	★ 722 2897-109
55464	National	DS55464	2897-71
	SiliconG	SG55464	2897-75
	TI	**SN55464**	★ 722 2897-79
55471	**TI**	**SN55471**	★ 722 2897-8
55472	**TI**	**SN55472**	★ 722 2897-48
55473	**TI**	**SN55473**	★ 722 2897-110
55474	**TI**	**SN55474**	★ 722 2897-80
55493	National	DS55493	2876-103
55494	National	PS55494	2876-141
555	Exar	XR555C	3383-31
		XR555M	3383-32
		XRL555	3383-33
	Fairchild	μA555C	3383-34
	Goldstar	**GM555**	★3580 3383-59
	Intersil	MM555	2828-43
		NE555	3383-36
	National	LM555C	3383-41
	Raytheon	RC555	3383-43
		RM555	3383-44
	RCA	CA555	3383-45
		CA555C	3383-46
	Samsung	**NE555**	★3679 3383-47
	Sharp	SM555	1413-11
	Signetics	**NE555**	★3721 3383-48
		SE555	★3724 ★3728 3383-49
		SE555C	★3724 ★3728 3383-50
	TI	**SE555**	★ 720 3383-54
		TLC555M	★ 720 3383-55
	ThomsonCSF	LM555	3383-56
5550	**Motorola**	**TCA5550**	★3613 ★3614 3316-119 3319-97
	OKI	MSM5550	3320-58
	Signetics	**TEA5550**	★3727 3321-38
55500	**TI**	**SN55500D**	★ 720 2877-101
55501	**TI**	**SN55501**	★ 720
5551	TI	SN5551	2874-47
55516	Harris	HC55516	¶ 411-20
5552	**Harris**	**HC5552**	★3595 3377-119
	TI	SN5552	2874-41
5553	**Harris**	**HC5553**	★3595 3377-120
	TI	SN5553	2874-44
55532	Harris	HC55532	¶ 411-20
55536	**Harris**	**HC55536**	★3597 3323-97 3378-26
5554	**Harris**	**HC5554**	★3595 3377-121
	TI	SN5554	2874-38
5555	NEC	μPD5555	3383-63
55551	**TI**	**SN55551**	★ 720
55552	**TI**	**SN55552**	★ 720
55553	**TI**	**SN55553**	★ 720
55554	**TI**	**SN55554**	★ 720
5556	NEC	μPD5556	3383-64
55564	**Harris**	**HC55564**	★3597 3323-98 3378-27
5557	**Harris**	**HC5557**	★3595 3377-80
	OKI	MSM5557	3320-82
5558	OKI	MSM5558	3320-96
556	CTI	MA556	3377-44
	Exar	XR556C	3383-75
		XR556M	3383-76
		XRL556C	3383-77
		XRL556M	3383-78
	Fairchild	μA556C	3383-79
	Goldstar	**GM556**	★3580 3383-69
	Intel	iSBC556	2031-48
	National	LM556	3383-82
		LM556C	3383-83
	NEC	μPB556	3375-81
	Raytheon	RC556	3383-84
		RM556	3383-85
	Samsung	**NE556**	★3679 3383-86
	Sharp	SM556	1413-12
	Signetics	**NE556**	★3721 3383-87
		NE556-1	★3721 3383-88
		SA556	★3728 3383-89
		SA556-1	★3728 3383-90
		SE556	★3723 ★3728 3383-91
		SE556-1	★3723 ★3728 3383-92
		SE556-1C	★3723 ★3728 3383-93
	TI	**SE556**	★ 720 3383-94
		TLC556M	★ 720 3383-73
	ThomsonCSF	LM556	3383-95
	Universal	USLC556	3383-74
5560	Cherry	CS5560N	3395-81
		CS5560S	3395-82
	Harris	**HC5560**	★3596 3380-104
	IPS	**IP5560**	★3599 3395-143
		IP5560C	★3599 3395-144
	Siemens	TDA5560	3325-158
	Signetics	**NE5560**	★3713 ★3730 3396-77
		SE5560	★3713 ★3730 3396-81
		TEA5560	★3727 3321-143
	Sprague	NE5560	3395-58
5561	Cherry	CS5561N	3395-83
		CS5561S	3395-84
	IPS	**IP5561**	★3599 3395-145
		IP5561C	★3599 3395-146
	Signetics	**NE5561**	★3713 ★3730 3396-78
			(Continued)

Arranged alphanumerically from left to right.

PART NUMBER INDEX

Base Number	Source	Device	Page-Line
5561	**Signetics**	**SE5561**	**★3713**
			★3730
			3396-82
	Sprague	NE5561	3395-59
	Toshiba	**TC5561-45**	**★4263**
			3847-16
		TC5561-55	**★4263**
			3847-35
5562	**Signetics**	**NE5562**	**★3713**
			★3730
			3396-79
		SE5562	**★3713**
			3396-83
	Toshiba	**TC5562-45**	**★4263**
			3847-17
		TC5562-55	**★4263**
			3847-36
5564	**Toshiba**	**TC5564-15**	**★4263**
			3843-72
		TC5564-20	**★4263**
			3843-93
		TC5564L-15	**★4263**
			3843-73
		TC5564L-20	**★4263**
			3843-94
5565	**Toshiba**	**TC5565-12**	**★4263**
			3843-46
		TC5565-15	**★4263**
			3843-74
		TC5565L-12	**★4263**
			3843-47
		TC5565L-15	**★4263**
			3843-75
5568	**Signetics**	**NE5568**	**★3715**
			★3730
			3396-80
	Sprague	NE5568	3395-60
557	LogicDev	LMU557	843-29
		LMU557C	807-98
		LMU557M	807-99
	Sharp	SM557	1413-13
5570	**Signetics**	**TEA5570**	**★3727**
			3321-96
5572	Harris	HC5572	3380-74
558	AD	AD558	¶ 387-1
			¶ 390-16
		AD558J	**★3104**
			★3109
			2853-25
		AD558K	**★3104**
			★3109
			2851-34
		AD558S	**★3104**
			★3109
			2854-3
		AD558T	**★3104**
			★3109
			2851-39
	Exar	XR558C	3383-98
		XR558M	3383-99
	Ferranti	ZN558E-8	2854-8
		ZN558J-8	2854-9
	LogicDev	LMU558	843-30
		LMU558C	807-100
		LMU558M	807-101
	Samsung	**NE558**	**★3679**
			3383-100
	Signetics		**★3728**
		NE558	**★3720**
			3383-101
		SA558	**★3728**
			3383-102
		SE558	**★3720**
			3383-103
5580	Harris	HC5580	3378-24
	Signetics	**TEA5580**	**★3727**
			3322-137
559	Exar	XR559C	3383-104
		XR559M	3383-105
	Motorola	MHW559	3324-89
5590	Harris	HC5590	3379-98
5592	**Signetics**	**NE5592**	**★3710**
			★3729
			3308-16
		SE5592	**★3729**
55B33	SEEQ	55B33-250	3813-80
		55B33H-250	3813-81
55L12	Raytheon	CGA55L12	4454-9
55S20	Fairchild	55S20	2899-3
55S234	Fairchild	55S234	2899-5
55S24	Fairchild	55S24	2899-10
56	Amperex	BGY56	3324-69
560	Cherry	CS560	3404-162
	Hitachi	SAS560	3328-24
	Motorola	MHW560	3324-90
	Plessey	SL560	3308-7
			¶ 413-8
	SBE	560	2013-28
	Telefunken	TBA560	3325-29
5600	**Exar**	**XRT5600**	**★3564**
			3380-83
	Goldstar	LL5600	4446-3
	LSILogic	**LL5600**	**★4676**
			4450-22
	Motorola	TCA5600	3399-59
			1469-159
		TCF5600	3399-60
			1469-160
	Plessey	CLA5600	4453-46
	Siemens	TDA5600	3327-63
56000	**RCA**	**PA56000**	**★4742**
			4454-24
5601	Reticon	R5601	844-116
			¶ 431-3
		RT5601A-1	3405-13
		RT5601A-2	3405-14
	SSS	SCL5601	3320-106
5602	Reticon	R5602A-8	3377-5
		RT5602-1	3377-9
		RT5602-3	3377-10
		RT5602-7	3377-11
	SSS	SCL5602	834-140
5603	SSS	SCL5603	834-142
5604	Reticon	RM5604	3377-22
	SSS	SCL5604	3320-86
5606	Reticon	RM5606	3377-23
5608	Harris	HI5608	¶ 389-6
5609	**Reticon**	**RF5609**	**★3533**
			3377-21
561	AD	AD561J	2860-6
		AD561K	2856-24
		AD561S	2860-7
		AD561T	2856-25
	Motorola	MHW561	3324-91
	Plessey	SL561B	3319-15
		SL561C	3319-16
	Signetics	MB561	3320-66
5610	Harris	HI5610	¶ 389-6
		HI5610-2	**★3189**
			2856-19
		HI5610-5	**★3189**
			2856-20
		HI5610-8	**★3189**
			2856-21
	MicroNet	**MN5610**	**★3203**
			2840-48
	Siemens	TDA5610	3327-64
561003	**Hitachi**	**HM561003-12**	**★4039**
			3830-9
		HM561003-15	**★4039**
			3830-17
		HM561003-20	**★4039**
			3830-25
5611	**Reticon**	**RF5611**	**★3533**
			3379-51
	Siemens	TDA5611	3327-65
5612	**Reticon**	**RF5612**	**★3533**
			3379-54
5613	**Reticon**	**RF5613**	**★3533**
			3379-52
	Sanyo	LC5613	3320-132
5614	**Reticon**	**RF5614**	**★3533**
			3377-6
5615	**Reticon**	**RF5615**	**★3533**
			3377-7
5616	**Reticon**	**RF5616**	**★3533**
			3377-8
5618	**Harris**	**HI5618A-2**	**★3190**
			2850-39
		HI5618A-5	**★3190**
			2850-40
			(Continued)
5618	**Harris**	**HI5618B-2**	**★3190**
			2851-44
		HI5618B-5	**★3190**
			2851-45
562	**AD**	**AD562A/BCD**	**★3108**
			2865-6
		AD562A/BIN	**★3108**
			2865-7
		AD562K/BCD	**★3108**
			2870-11
		AD562K/BIN	**★3108**
			2864-16
		AD562S/BCD	**★3108**
			2870-12
		AD562S/BIN	**★3108**
			2861-14
	Datel	**DAC-562C**	**★3162**
			2862-30
	Harris	HI562	¶ 389-6
		HI562A-2	**★3182**
			2861-1
		HI562A-5	**★3182**
			2862-51
		HI562A-8	**★3182**
			2861-2
	MicroPwr	**MP562H**	**★ 688**
			★3206
			2864-10
		MP562J	**★ 688**
			★3206
			2864-11
		MP562K	**★ 688**
			★3206
			2864-12
	Motorola	AD562AK	2862-32
		AD562AS	2859-88
		MHW562	3324-92
	NEC	μPB562	3375-82
	PMI	PM-562A	2861-19
		PM-562B	2864-13
		PM-562F	2864-14
		PM-562H	2864-15
		PM562	**★3637**
	Signetics	MB562	3320-67
5620	**Exar**	**XRT5620**	**★3564**
			3380-84
	Reticon	RU5620	3398-10
5621	Reticon	RU5621	3377-25
			3398-7
			3398-34
	Sanyo	LC5621	3320-130
5622	Reticon	RU5622	3377-26
			3398-8
			3398-35
5626	Reticon	RU5626	4464-43
563	**AD**	**AD563J/BCD**	**★3108**
			2870-13
		AD563J/BIN	**★3108**
			2864-17
		AD563K/BCD	**★3108**
			2870-14
		AD563K/BIN	**★3108**
			2861-15
		AD563S/BCD	**★3108**
			2870-15
		AD563S/BIN	**★3108**
			2861-16
		AD563T/BCD	**★3108**
			2870-16
		AD563T/BIN	**★3108**
			2861-17
	Motorola	AD563	2863-10
	Sharp	SM563	1450-78
			1413-14
5630	**Reticon**	**RM5630**	**★3534**
			3380-44
5631	**Reticon**	**RM5631**	**★3534**
			3380-45
5632	**Reticon**	**RM5632**	**★3534**
			3380-51
5633	Reticon	RF5633	3377-4
5635	**Reticon**	**RM5635**	**★3534**
			3380-53
5636	**Reticon**	**RM5636**	**★3534**
			3380-26
5637	**Reticon**	**RM5637**	**★3534**
			3380-27
5638	**Reticon**	**RM5638**	**★3534**
			3380-28
564	**Signetics**	**NE564**	**★3728**
			3375-41
		SE564	**★3728**
			3375-42
5640	Exar	XRT5640	3380-78
	Reticon	**RT5640**	**★3165**
			844-32
			2839-23
			3379-85
565	**AD**	**AD565AJ**	**★3108**
			2861-51
		AD565AK	**★3108**
			2859-79
		AD565AS	**★3108**
			2861-52
		AD565AT	**★3108**
			2859-80
		AD565J	**★3108**
			2862-45
		AD565K	**★3108**
			2859-98
		AD565S	**★3108**
			2862-46
		AD565T	**★3108**
			2859-99
	Fairchild	μA565JC	2862-47
		μA565KC	2859-100
		μA565SM	2862-48
		μA565TM	2859-101
	Harris	**HI565AJ**	**★3183**
			2863-4
		HI565AK	**★3183**
			2861-4
		HI565AS	**★3183**
			2863-5
		HI565AT	**★3183**
			2861-5
	MCE	MCE565AJ	2861-53
		MCE565AS	2861-54
		MCE565J	2862-39
		MCE565K	2859-102
		MCE565S	2862-40
		MCE565T	2859-103
	MicroNet	**MN565AJ**	**★3204**
			2861-55
		MN565AK	**★3204**
			2859-81
		MN565AS	**★3204**
			2861-56
		MN565AT	**★3204**
			2859-82
	Motorola	LM565	3376-16
		NE565	3376-17
	National	LM565	3376-18
		LM565C	3376-19
	Signetics	**NE565**	**★3722**
			3376-20
		SE565	**★3728**
			3376-21
5650	**Exar**	**XRT5650**	**★3565**
			3380-81
5651	**Reticon**	**RF5651**	**★3533**
			3379-50
566	**AD**	**AD566AJ**	**★3108**
			2862-35
		AD566AK	**★3108**
			2859-90
		AD566AS	**★3108**
			2862-36
		AD566AT	**★3108**
			2859-91
		AD566J	**★3108**
			2862-37
		AD566K	**★3108**
			2859-92
		AD566S	**★3108**
			2862-38
		AD566T	**★3108**
			2859-93
	MCE	MCE566AJ	2862-41
		MCE566AK	2859-94
		MCE566AS	2862-42
			(Continued)

¶ Indicates page number in Application Note Directory.
★ Indicates additional data is provided on the page noted.

Base Number	Source	Device	Page-Line
566	MCE	MCE566AT	2859-95
		MCE566J	2862-43
		MCE566K	2859-96
		MCE566S	2862-44
		MCE566T	2859-97
	National	LM566	3376-27
		LM566C	3376-28
	NEC	μPB566	3376-5
		μPC566	3319-14
	Signetics	**NE566**	**★3723**
			3376-31
		SE566	**★3723**
			3376-32
5660	Exar	XRT5660	3380-96
	Harris	HI5660-2	2867-41
		HI5660-5	2867-42
		HI5660A-2	2867-43
		HI5660A-S	2867-44
567	AD	AD567J	2863-6
		AD567K	2861-6
		AD567S	2863-7
	Exar	XR567	¶ 411-14
		XR567AC	**★3546**
			3375-145
			3381-111
		XR567AM	**★3546**
			3375-146
			3381-112
		XRL567C	**★3546**
			3375-147
		XRL567M	**★3546**
			3375-148
	MicroNet	MN567J	2863-8
		MN567K	2861-7
		MN567S	2863-9
	National	LM567	3375-149
		LM567C	3375-150
			3381-113
	Samsung	**LM567C**	**★3679**
			3375-153
			3381-116
	Signetics	**NE567**	**★3720**
			3376-1
			3381-117
		SE567	**★3728**
			3376-2
			3381-118
5670	**Exar**	**XRT5670**	**★3565**
			3377-33
568	**Signetics**	**NE568**	**★3728**
		SE568	**★3728**
	Siliconix	**DG568B**	**★3226**
			★3246
			2831-42
		DG568C	**★3226**
			★3246
			2831-43
5680	Exar	XR-T5680	¶ 412-16
		XRT5680	3380-103
	Harris	**HI5680I-5**	**★3191**
			2862-13
		HI5680V-5	**★3191**
			2865-1
5681	**Exar**	**XRT5681**	**★3566**
			3380-102
5682	Exar	XRT5682	3376-9
5685	**Harris**	**HI5685I-4**	**★3191**
			2862-14
		HI5685V-4	**★3191**
			2865-2
5687	**Harris**	**HI5687I-2**	**★3191**
			2862-15
		HI5687V-2	**★3191**
			2865-3
569	**AD**	**AD569J**	**★3113**
			2873-7
		AD569K	**★3113**
			2873-8
	Intel	iSBC569	2011-17
			2031-42
	Siliconix	**DG569B**	**★3227**
			★3246
			2830-82
		DG569C	**★3227**
			★3246
			2830-83

Base Number	Source	Device	Page-Line
5690	**Harris**	**HI5690V-5**	**★3192**
			2843-13
5695	Harris	HI5695V-4	2843-14
5697	**Harris**	**HI5697V-2**	**★3192**
			2843-15
57	Amperex	BGY57	3324-70
570	AD	AD570J	2835-5
	HiLevel	DS570	1815-6
	HiLevel	**DS570**	**★1902**
	Hitachi	SAS570	3328-25
	MCE	MCE570J	2835-7
		MCE570S	2835-8
	Motorola	MHW570	3324-93
	RCA	CA570	1467-83
	Signetics	**NE570**	**★3706**
			★3727
			3377-162
	SiliconSys	**SSI570**	**★3736**
			2892-25
			1467-72
5700	Exar	XRT5700	3380-85
	MicroNet	**MN5700**	**★3203**
			2842-54
	National	TP5700	3381-35
	Plessey	CLA5700	4453-49
	Sanyo	LA5700	3401-113
5703	**Sprague**	**UDN-5703A**	**★3269**
			2898-116
		UDS-5703H	2898-117
5704	National	MM5704	¶ 400-6
5706	**Sprague**	**UDN-5706A**	**★3269**
			864-31
			2898-85
		UDS-5706H	864-32
			2898-86
5707	**Sprague**	**UDN-5707A**	**★3269**
			2898-95
		UDS-5707H	2898-96
571	**AD**	**AD571J**	**★3126**
			2839-9
		AD571K	**★3126**
			2838-41
		AD571S	**★3126**
			2839-10
	CTI	**MA571**	**★3526**
			3379-91
	Fairchild	μA571JC	2839-13
		μA571KC	2838-42
		μA571SM	2839-14
	MCE	MCE571J	2839-11
		MCE571S	2839-12
	NEC	μPB571	3376-4
	Signetics	**NE571**	**★3706**
			★3727
			3377-163
		SA571	**★3706**
			★3727
			★3729
			3378-1
5710	National	TP5710	3381-36
5710000			
	Toshiba	**TC5710000**	**★4263**
57109	National	MM57109	¶ 381-2
5711	**Sprague**	**UDN-5711M**	**★3269**
			2897-23
		UDS-5711H	2897-25
5712	Harris	HI-5712	¶ 394-10
		HI5712	¶ 371-7
			¶ 371-17
	Intech	DAS5712	2839-31
			3399-55
	Sprague	**UDN-5712M**	**★3269**
			2897-64
		UDS-5712H	2897-66
5713	**Sprague**	**UDN-5713M**	**★3269**
			2897-125
		UDS-5713H	2897-127
5714	Intech	DAS5714	2846-19
			3399-56
	Sprague	**UDN-5714M**	**★3269**
			2897-95
		UDS-5714H	2897-97
5716	Intech	DAS5716	2846-40
			3399-57
572	AD	AD572A	2841-42
		AD572B	2841-43
			(Continued)

Base Number	Source	Device	Page-Line
572	AD	AD572S	2841-44
	Motorola	MHW572	3324-94
	NEC	μPB572	3376-8
	Signetics	**NE572**	**★3706**
			★3727
			3377-164
		S572	**★3727**
		SA572	**★3706**
			★3729
			3378-2
5720	Exar	XRT5720	3380-86
5721	Harris	HI5721	2842-11
	Sprague	UDN-5721M	2895-48
5722	**Sprague**	**UDN-5722M**	**★3269**
			2897-57
5723	Sprague	UDN-5723M	2897-68
5724	Sprague	UDN-5724M	2897-67
57256	**Toshiba**	**TC57256-20**	**★4263**
			3824-19
		TC57256-25	**★4263**
			3824-42
573	**AD**	**AD573J**	**★3117**
			★3127
			2839-4
		AD573K	**★3117**
			★3127
			2838-33
		AD573S	**★3117**
			★3127
			2838-34
	Sharp	SM573	1450-74
			1413-15
5732	**Sprague**	**UDN-5732**	**★3269**
5733	**Sprague**	**UDN-5733A**	**★3269**
			2898-106
		UDS-5733H	2898-107
5736	National	MM5736	¶ 356-12
5739	National	MM5739	¶ 356-12
574	**AD**	**AD574AJ**	**★3118**
			★3129
			2844-41
		AD574AK	**★3118**
			★3129
			2841-37
		AD574AS	**★3118**
			★3129
			2844-42
		AD574AT	**★3118**
			★3129
			2841-47
		AD574J	**★3118**
			★3129
			2844-49
		AD574K	**★3118**
			★3129
			2841-48
		AD574L	**★3118**
			★3129
			2841-49
		AD574S	**★3118**
			★3129
			2841-50
		AD574T	**★3118**
			★3129
			2841-51
		AD574U	**★3118**
			★3129
			2841-52
		AD574ZJ	**★3118**
			★3129
			2845-7
		AD574ZK	**★3118**
			★3129
			2845-8
		AD574ZL	**★3118**
			★3129
			2842-3
		AD574ZS	**★3118**
			★3129
			2842-4
		AD574ZT	**★3118**
			★3129
			2842-5
		AD574ZU	**★3118**
			★3129
			2842-6
			(Continued)

Base Number	Source	Device	Page-Line
574	**Burr-Brown**	**ADC574AJ**	**★3146**
			2844-45
		ADC574AK	**★3146**
			2843-50
		ADC574AS	**★3146**
			2841-39
		ADC574AT	**★3146**
			2844-46
	Datel	**ACD-574**	**★3157**
		ADC-574AJ	2844-32
		ADC-574AK	2841-35
		ADC-574AL	2841-36
		ADC-574AS	2844-33
		ADC-574AT	2844-34
		ADC-574AU	2844-35
	Harris	**HI574AJ**	**★3184**
			2844-36
		HI574AK	**★3184**
			2845-24
		HI574AL	**★3184**
			2845-25
		HI574AS	**★3184**
			2844-37
		HI574AS-8	**★3184**
			2844-38
		HI574AT	**★3184**
			2845-26
		HI574AT-8	**★3184**
			2845-27
		HI574AU	**★3184**
			2845-28
		HI574AU-8	**★3184**
			2845-29
	HybridSys	HS574AJ	2844-47
		HS574AK	2843-51
		HS574AL	2843-52
		HS574ASB	2844-48
		HS574ATB	2843-53
		HS574AUB	2843-54
		HS574J	2839-24
		HS574K	2841-29
		HS574L	2841-30
		HS574S	2839-25
		HS574T	2844-24
		HS574U	2844-25
	MCE	MCD574K	2841-53
		MCE574AS	2844-31
		MCE574J	2844-50
		MCE574L	2841-54
		MCE574S	2841-55
		MCE574T	2842-1
		MCE574U	2842-2
		MCE574ZJ	2845-9
		MCE574ZK	2845-10
		MCE574ZL	2842-7
		MCE574ZS	2842-8
		MCE574ZT	2842-9
		MCE574ZU	2842-10
	MicroNet	**MN574A**	**★3203**
			2841-38
	MicroPwr	**MP574J**	**★3206**
			2844-43
		MP574K	**★3206**
			2845-33
		MP574L	**★3206**
			2845-34
		MP574S	**★3206**
			2844-44
		MP574T	**★3206**
			2845-35
		MP574U	**★3206**
			2845-36
	NEC	μPC574J	3317-6
	TeledyneP	TP574AJ	2844-39
		TP574AK	2845-30
		TP574AS	2844-40
		TP574AT	2845-31
		TP574AU	2845-32
5740	Exar	XRT5740	3380-79
57401	**MMI**	**57401**	**★ 691**
			3809-51
		57401A	**★ 691**
			3809-63
		C57401	**★1115**
			3809-52
			(Continued)

Arranged alphanumerically from left to right.

Base Number	Source	Device	Page-Line
57401	**MMI**	**C57401A**	**★1115** 3809-65
57402	**MMI**	**57402**	**★ 691** 3809-92
		57402A	**★ 691** 3809-96
		C57402	**★1115** 3809-93
		C57402A	**★1115** 3809-98
57409	National	MM57409	1469-155
5741	**Sprague**	**UDN-5741M**	**★3269** 2897-28
57411	**MMI**	**57411A**	**★ 691** 3809-85
57412	**MMI**	**57412A**	**★ 691** 3809-116
57413	**MMI**	**57413A**	**★ 691** **★1116** 3809-113
5742	**Sprague**	**UDN-5742M**	**★3269** 2897-26 2897-58
5743	**Sprague**	**UDN-5743M**	**★3269** 2897-33
5744	Sprague	UDN-5744M	2897-31
57455	National	MM57455	1469-59
575	**AD**	**AD575J**	**★3119** **★3127** 2839-7
		AD575K	**★3119** **★3127** 2838-53
		AD575S	**★3119** **★3127** 2839-8
	NEC	μPC575	3326-45
	RCA	CA575	1467-84
	SiliconSys	**SSI575**	**★3736** 2892-26 1467-73
5750	Exar	XRT5750	3380-82
5751	Sprague	UDN-5751M	2897-27
57512	**Toshiba**	**TC57512**	**★4263**
5752	Sprague	UDN-5752M	2897-29
5753	Fujitsu	FT5753	2897-144
	Sprague	UDN-5753M	2897-32
5754	Fujitsu	FT5754	2897-145
	Sprague	UDN-5754M	2897-30
5755	Fujitsu	FT5755	2897-146
57558	MMI	57558	843-32
		57558-1	855-153
576	Siemens	S576A	3328-40
		S576B	3328-41
		S576C	3328-42
		S576D	3328-43
5760	Exar	XRT5760	3380-97
578	AD	AD578J	2840-8
		AD578K	2839-53
		AD578L	2839-47
	Maxim	AD578	844-41
		AD578J	2843-26
		AD578K	2843-23
		AD578L	2843-22
579	AD	AD579B	2838-16
		AD579J	2838-19
		AD579K	2838-17
		AD579T	2838-18
5790	Sprague	UDS-5790H	2898-65 3398-1
5791	Sprague	UDS-5791H	891-108 2898-66 3401-73
58	Amperex	BGY58A	3324-71
580	AD	580	¶ 391-17
		AD580J	**★3136** 3402-39
		AD580K	**★3136** 3402-40
		AD580L	**★3136** 3402-41
		AD580S	**★3136** 3402-42
		AD580T	**★3136** 3402-43
		AD580U	**★3136** (Continued)
580	AD	AD580U	3402-44
	AWI	AW580	2874-20
	Cherry	CS580	3320-36
	Intel	iSBC580	2031-47
	LTI	LC580	3316-137
	Motorola	MHW580	3324-95
	SiliconSys	**SSI580**	**★3736** 2892-24 1467-85
5800	**Fairchild**	**μA5800**	**★3576**
	NEC	MC5800	3308-43
	Plessey	CLA5800	4453-50
	Sprague	UCN-5800A	2898-58 ¶ 398-16
		UCS5800R	2894-42
		UDN-5800	**★3269** ¶ 397-14
5801	NEC	MC5801	3308-44
	Sprague	**UCN-5801A**	**★3269** 2898-135 ¶ 398-16
		UCS5801R	2895-8
5802	NEC	MC5802	3308-45
5804	**Samsung**	**KS5804**	**★3679** 3378-103
5805	NEC	MC5805	3308-46
	Samsung	**KS5805**	**★3679** 3378-104
5806	Samsung	KS5806	3378-105
58064	**Hitachi**	**HN58064-25**	**★4038** 3813-37
		HN58064-30	**★4038** 3813-49
		HN58064-35	**★4038** 3813-66
5808	**Samsung**	**KS5808**	**★3679** 3382-89
581	**AD**	**AD581J**	**★3136** 3402-180
		AD581K	**★3136** 3402-181
		AD581L	**★3136** 3402-182
		AD581S	**★3136** 3402-183
		AD581T	**★3136** 3402-184
		AD581U	**★3136** 3402-185
	NEC	μPB581C	3375-99
5810	**Sprague**	**UCN-5810A**	**★3269** 2875-28 2894-5
		UDN-5810	¶ 397-14
5811	Harris	HI5811	2864-8
5812	**Sprague**	**UCN-5812A**	**★3269** 2894-6
5813	**Sprague**	**UCN-5813B**	**★3268** **★3269** 2896-56 ¶ 398-16
5814	NEC	MC5814	3308-47
	Sprague	**UCN-5814B**	**★3269** 2896-57 ¶ 398-16
58142	National	MM58142	3320-109
58146	National	MM58146	3324-104
5815	**MicroNet**	**MN5815**	**★3203** 2833-32
	NEC	MC5815	3308-48
	Sprague	**UCN-5815A**	**★3269** 2875-27 2898-136
5816	OKI	MSM5816	3327-155
	Sprague	**UCN-5816A**	**★3269** 2895-43
58167	National	MM58167A	1468-31 ¶ 371-15 ¶ 380-7
58174	National	MM58174	1469-109
		MM58174A	1468-32 ¶ 382-8
5818	**Sprague**	**UCN-5818A**	**★3269** 2894-7
5819	OKI	MSM5819	2895-131
582	**AD**	**AD582K**	**★3140** 3403-153
		AD582S	**★3140** 3403-154
	NEC	μPB582C	3375-100
5820	Sprague	UDN-5820	¶ 397-14
58201	Intech	MM58201	¶ 397-17
	National	MM58201	2875-23
5821	**Sprague**	**UCN-5821A**	**★3269** 2895-37
5822	**Sprague**	**UCN-5822A**	**★3269** 2895-38
5823	Sprague	UCN-5823	¶ 398-7
		UCN-5823A	**★3269** 2895-36
58241	Intech	MM58241	¶ 399-8
	National	MM58241	2877-97
58242	Intech	MM58242	¶ 399-8
	National	MM58242	2877-92
58248	Intech	MM58248	¶ 399-8
	National	MM58248	2877-98
5825	MicroNet	MN5825	2833-42
	Sprague	**UCN-5825B**	**★3268** **★3269** 2896-54
58250	National	MM58250	3323-43
5826	**Sprague**	**UCN-5826B**	**★3268** **★3269** 2896-55
58274	National	MM58274	1469-110 ¶ 367-11 ¶ 367-12
58282	OKI	MSM58282	1451-69
58283	OKI	MSM58283	1451-70
58292	**OKI**	**M58292**	**★4733** 2874-89
		MSM58292	1451-71
58293	OKI	MSM58293	1451-72
583	AD	AD583K	3403-155
		AD583S	3403-156
	SGS	L583	3319-129
5830	Siemens	TDA5830	3327-66
5832	OKI	MSM5832	1451-63 1468-36
	SGS	L5832	1451-65 1468-37
	Sprague	**UCN-5832A**	**★3269** 2898-157
58321	**OKI**	**MSM58321**	**★4732** 1451-64
5833	**Sprague**	**UCN-5833**	**★3269** 2898-158
58341	Intech	MM58341	¶ 399-8
	National	MM58341	2877-99
58342	Intech	MM58342	¶ 399-8
58348	Intech	MM58348	¶ 399-8
	National	MM58348	2877-100
5835	Siemens	TDA5835	3327-67
5837	National	MM5837	3320-150 3401-17
58371	OKI	MSM58371	1451-68
5838	OKI	MSM5838	1451-67
5839	**OKI**	**M5839B**	**★4733** 2874-95
		MSM5839	1451-66
584	**AD**	**AD584J**	**★3135** 3402-80
		AD584K	**★3135** 3402-81
		AD584L	**★3135** 3402-82
		AD584S	**★3135** 3402-83
		AD584T	**★3135** 3402-84
		AD584U	**★3135** 3402-85
	Toshiba	TC584B	839-9
5840	National	MM5840	¶ 417-15
	OKI	**MSM5840**	**★4732** 1409-28
		MSM5840RS	**★4732** 1409-29
5841	Sprague	UCN-5841A	2898-153
5842	OKI	MSM5842	1451-61
	Sprague	UCN-5842A	2898-154
58421	**OKI**	**MSM58421**	**★4732** 1451-59
		MSM58421GS	**★4732** 1409-30
58422	OKI	MSM58422	1451-60
584223	OKI	MSM584223RS	1409-31
5843	Sprague	UCN-5843A	2898-152
58438	National	MM58438	2877-94
5845	OKI	MSM5845	1451-62 1409-32
585	**AD**	**AD585J**	**★3137** **★3140** 3403-157
		AD585S	**★3137** **★3140** 3403-158
5850	Siemens	TDA5850	3327-102
5851	**Sprague**	**UCN-5851**	**★3269** 2895-46
5852	**Sprague**	**UCN-5852**	**★3269** 2895-47
5853	**Sprague**	**UCN-5853**	**★3269**
58538	National	MM58538	2874-80
58539	National	MM58539	2874-81
5854	**Sprague**	**UCN-5854**	**★3269**
58540	National	MM58540	2874-82
58548	National	MM58548	2874-83
5865	National	MM5865	¶ 428-12 ¶ 428-13
587	Exar	XRC587	3380-98
	Signetics	**NE587**	**★3726** 2876-13
58735	Mitsubishi	M58735	3820-99
588	Exar	XRC588	3380-99
5881	Sprague	UCN-5881EP	2894-16
589	AD	AD589	¶ 427-14
		AD589J	**★3136** 3402-15
		AD589K	**★3136** 3402-16
		AD589L	**★3136** 3402-17
		AD589M	**★3136** 3402-18
		AD589S	**★3136** 3402-19
		AD589T	**★3136** 3402-20
		AD589U	**★3136** 3402-21
	Signetics	**NE589**	**★3726** 2875-169
5890	**Sprague**	**UCN-5890**	**★3269** 2898-150
5891	**Sprague**	**UCN-5891**	**★3269** 2898-149
5895	**Sprague**	**UCN-5895A**	**★3269** 2898-151
58990	Mitsubishi	M58990	2836-17
		M58990-1	2837-11
590	AD	AD590	¶ 429-4
		AD590I	**★3512** 3404-126
		AD590J	**★3512** 3404-127
		AD590K	**★3512** 3404-128
		AD590L	**★3512** 3404-129
		AD590M	**★3512** 3404-130
	Intersil	**AD590I**	**★3604** 3404-132
		AD590J	**★3604** 3404-133
		AD590K	**★3604** 3404-134
		AD590L	**★3604** 3404-135
		AD590M	**★3604** 3404-136
	Motorola	MHW590	3307-107
	SBE	590	2013-31
	Sharp	SM590	1450-67 1413-16
	Signetics	**NE590**	**★3726** (Continued)

¶ Indicates page number in Application Note Directory.
★ Indicates additional data is provided on the page noted.

Base Number	Source	Device	Page-Line
590	Signetics	NE590	2894-1
			1469-122
		SE590	2894-3
	SiliconSys	**SSI590**	★ **3736**
5900	Cadnetix	CDX-5900	4906-1
		CDX5900	★ **5102**
	Harris	HI-5900	¶ 394-10
			¶ 401-10
		HI5900	¶ 371-17
			¶ 394-15
	Plessey	CLA5900	4453-51
	Signetics	**NE5900**	★ **3702**
			★ **3728**
			3377-34
	Sprague	**UCN-5900A**	★ **3269**
			2898-59
59000	**Cadnetix**	**CDX-59000S**	★ **5102**
			4906-2
		CDX59000	★ **5102**
5901	GI	ER5901	3811-51
			¶ 364-14
			¶ 365-5
	Goldstar	**GL5901**	★ **3580**
			3321-89
	Harris	HI-5901	¶ 394-10
			¶ 401-10
	Sprague	**UCN-5901A**	★ **3269**
			2898-137
59016	Waferscale	WS59016	844-91
5902	GI	ER5902	3811-68
	OEI	5902	3401-60
5904	GI	ER5904	3811-80
5905	**MicroPwr**	**MP5905**	★ **3605**
			3309-139
5906	**MicroPwr**	**MP5906**	★ **3605**
			3309-140
5907	**MicroPwr**	**MP5907**	★ **3605**
			3309-141
5908	**MicroPwr**	**MP5908**	★ **3605**
			3309-142
5909	**MicroPwr**	**MP5909**	★ **3605**
			3309-143
591	Motorola	MHW591	3307-108
	Sharp	SM591	1450-68
			1413-17
	Signetics	**NE591**	★ **3726**
			2894-2
			1469-123
	SiliconSys	**SSI591**	★ **3736**
			1469-29
5910	Reticon	RT5910	3380-29
	Sprague	**UCN-5910A**	★ **3269**
			2898-156
			¶ 398-7
5911	GI	ER5911	3811-40
			3811-55
	MicroPwr	**MP5911**	★ **3605**
			3309-144
5912	GI	ER5912	3811-56
			3811-73
	MicroPwr	**MP5912**	★ **3605**
			3309-145
		MP5912C	★ **3605**
			3309-146
592	**AD**	**AD592**	★ **3512**
			3404-131
	Fairchild	μA592C	3306-61
		μA592M	3306-62
	Intersil	**NE592**	★ **3602**
			3307-149
		SE592	★ **3602**
			3307-150
	Motorola	MHW592	3307-109
		NE592	3307-155
		SE592	3307-156
	National	LM592	3306-58
		LM592A	3306-59
	Signetics	**NE592**	★ **3722**
			★ **3729**
			3308-17
		SE592	★ **3722**
			★ **3729**
			3308-18
59256	GI	ER59256	3811-11
593	Cherry	CS593C	3395-85
	Motorola	MHW593	3307-110
59306	**NCR**	**NCR59306**	★ **4128**
			3811-14
		NCR59306A	★ **4128**
			3811-15
59308	**NCR**	**NCR59308**	★ **4128**
			3811-38
			¶ 435-2
		NCR 59308	¶ 434-3
594	**AD**	**AD594A**	★ **3512**
			★ **3514**
			3307-132
		AD594C	★ **3512**
			★ **3514**
			3307-133
	Cherry	CS594C	3395-86
		CS594M	3395-87
	Motorola	MHW594	3324-96
	Signetics	**NE594**	★ **3726**
			2877-39
		SA594	★ **3726**
			2877-40
	Sprague	TL594C	3395-62
	TI	**TL594M**	★ **720**
			3397-3
595	**AD**	**AD595A**	★ **3512**
			★ **3514**
			3307-134
		AD595C	★ **3512**
			★ **3514**
			3307-135
	Cherry	CS595C	3395-88
	Motorola	MHW595	3324-97
	Sprague	TL595C	3395-63
596	**AD**	**AD596**	★ **3512**
			★ **3515**
			3404-125
597	**AD**	**AD597**	★ **3512**
			★ **3515**
5981	**CTI**	**5981**	★ **3526**
			3381-100
5983	CTI	5983	3381-101
5990	Exar	XRT5990	3378-59
5992	Exar	XRT5992	3378-70
59C13	**CTI**	**MA59C13**	★ **3526**
			3377-87
59C14	**CTI**	**MA59C14**	★ **3526**
			3377-88
59C16	**CTI**	**MA59C16**	★ **3526**
			3377-111
59C17	**CTI**	**MA59C17**	★ **3526**
			3377-59
5C01	**Panatech**	**RP5C01**	★ **4133**
			1468-33
5C06	**Panatech**	**RP5C06**	★ **4133**
			890-65
5C121	**Intel**	**5C121**	★ **4665**
5C15	**Panatech**	**RP5C15**	★ **4133**
			1468-34
5C16	**Panatech**	**RP5C16**	★ **4133**
			3325-63
5C17	**Panatech**	**RP5C17**	★ **4133**
			3325-64
5E555	Mitsubishi	M5E555	3383-38
5GH05	**Panatech**	**RP5GH05**	★ **4735**
			4453-29
5GH16	**Panatech**	**RP5GH16**	★ **4735**
			4453-30
5GH23	**Panatech**	**RP5GH23**	★ **4735**
			4453-31
5GH29	**Panatech**	**RP5GH29**	★ **4735**
			4453-32
5GH38	**Panatech**	**RP5GH38**	★ **4735**
			4453-33
5GH55	**Panatech**	**RP5GH55**	★ **4735**
			4453-34
5H01	**Panatech**	**RP5H01**	★ **4133**
			3814-63
5L27128	Mitsubishi	M5L27128	3823-32
		M5L27128-2	3823-7
5L2764	Mitsubishi	M5L2764	3822-15
		M5L2764-2	3821-100
5L27C128	Mitsubishi	M5L27C128	3823-33
		M5L27C128-2	3823-8
		M5L27C128-3	3823-57
5L8035	Mitsubishi	M5L8035	1421-33
5L8039	Mitsubishi	M5L8039-11	1421-34
		M5L8039-6	1421-35
5L8041	Mitsubishi	M5L8041A	1457-25
5L8048	Mitsubishi	M5L8048	1456-71
5L8049	Mitsubishi	M5L8049	1456-72
		M5L8049-6	1421-36
5L8085	Mitsubishi	M5L8085A	1457-293
			1421-37
5L80C49	Mitsubishi	M5L80C49	1456-73
5L8155	Mitsubishi	M5L8155	1457-414
5L8156	Mitsubishi	M5L8156	1457-415
5L8212	Mitsubishi	M5L8212	1457-176
5L8216	Mitsubishi	M5L8216	1457-99
5L8243	Mitsubishi	M5L8243	1457-330
5L8251	Mitsubishi	M5L8251A	1457-343
5L8253	Mitsubishi	M5L8253-5	1457-388
5L8255	Mitsubishi	M5L8255A-5	1457-397
5L8257	Mitsubishi	M5L8257-5	1457-358
5L8259	Mitsubishi	M5L8259A	1457-378
5L8279	Mitsubishi	M5L8279-5	1457-185
5L8282	Mitsubishi	M5L8282	1462-36
5L8283	Mitsubishi	M5L8283	1462-28
5L8284	Mitsubishi	M5L8284A	1461-100
5L8286	Mitsubishi	M5L8286	1462-20
5L8287	Mitsubishi	M5L8287	1462-9
5L8288	Mitsubishi	M5L8288	1461-88
5L8289	Mitsubishi	M5L8289	1461-78
5M005G1	ICDC	C5M005G1	4448-31
5M010G1	ICDC	C5M010G1	4448-32
5M015G1	ICDC	C5M015G1	4448-34
5M2167	Mitsubishi	M5M2167-55	3844-43
		M5M2167-70	3844-77
5M2168	Mitsubishi	M5M2168-55	3844-59
		M5M2168-70	3844-78
5M23128	Mitsubishi	M5M23128	3852-25
5M23256	Mitsubishi	M5M23256	3852-129
5M2364	Mitsubishi	M5M2364	3850-122
5M2365	Mitsubishi	M5M2365	3850-106
5M4256	Mitsubishi	M5M4256-12	3829-10
		M5M4256-15	3829-44
		M5M4256-20	3829-68
5M425610	Mitsubishi	M5M425610	3828-92
5M4257	Mitsubishi	M5M4257-10	3828-93
		M5M4257-12	3829-11
		M5M4257-15	3829-45
		M5M4257-20	3829-69
5M4416	Mitsubishi	M5M4416-12	3826-96
		M5M4416-15	3826-101
5M5165	Mitsubishi	M5M5165-10L	3843-20
		M5M5165-12L	3843-37
		M5M5165-70	3843-3
		M5M5165-70L	3843-4
		M5M5165P-10	3843-21
		M5M5165P-12	3843-38
5M8050	Mitsubishi	M5M8050H	1421-38
5N339	Mitsubishi	M5N339	3316-39
5P8	MMI	PLE5P8AC	4474-7
		PLE5P8C	4474-8
		PLE5P8M	4474-9
5W1791	Mitsubishi	M5W1791-02	1467-7
6	AdvDigital	Super 6	2021-8
	Datel	**SHM-6MM**	★ **3160**
			★ **3163**
			3404-1
	GouldAMI	UA-6	4446-16
	Interdesign	ULA6ARA	4443-2
		ULA6ARB	4443-3
		ULA6ARC	4443-4
		ULA6ARD	4443-5
			(Continued)
6	Interdesign	ULA6G	4463-8
	LSIComp	D6	834-99
	Panatech	ASP6AP-55	4472-96
	RACAL	DSM-6	4929-1
		DSM 6	4981-1
			5059-19
	SiliconSys	**SCA-6**	★ **4751**
			4465-1
			3404-114
	TeledyneC	CAG6	2822-20
		CAG6-10	2822-22
		CDA6	2824-131
	Teradyne	Laser Version 6	4959-1
			5066-1
			4972-1
	TLSI	TA-6	4456-29
	Torric	UA6	4456-42
60	**Burr-Brown**	**ADC60-12**	★ **3146**
			2839-50
		DAC60	★ **3146**
		SHM60	★ **3148**
	Interdesign	ULA60DS	4444-31
	LSIComp	D60	834-102
	MCE	MCE60	3354-52
	Polycore	MX60	4464-41
600	AD	RTI-600	2044-20
	Burr-Brown	**OPA600/MIL**	★ **3154**
			3334-277
		OPA600N	★ **3154**
			3346-31
		OPA600U	★ **3154**
			3352-13
		OPA600U/883B	★ **3154**
			3352-14
		OPA600V/883B	★ **3154**
			3346-32
		OPA600V/MIL	★ **3154**
			3346-33
	Cybernetic	CY600	2894-13
			3399-1
			1469-48
	Exar	XR-CA600	4462-39
	Fujitsu	**B600**	★ **4625**
			4444-49
	Inmos	**IMSD600**	★ **1903**
			1815-9
	Motorola	**MCA600ECL**	★ **4718**
			4451-35
		MCA600ETL	★ **4718**
			4451-52
		MVME600	★ **2112**
			2031-35
	National	MCA600	¶ 443-8
	Plessey	SL600 Series	¶ 413-9
	Signetics	ACE600	4455-6
	SiliconG	SM600	3396-106
	Unitrode	PIC600	3397-11
6000	AppBusComp	DT6000	2005-22
	CalDevices	CDI6000	4440-23
		CHA6000	★ **4610**
			4440-40
	Calos	CALO 6000	4910-2
		CALOS 6000	5044-25
		EWS 6000	4910-3
	Fairchild	**FGC6000**	★ **4621**
			4442-25
			¶ 443-9
	GouldAMI	**GB6000D**	★ **4632**
			4446-23
	ITT	SAA6000	1450-28
	Mostek	GB6000D	4451-28
		MKGB6000D	★ **4716**
			4451-29
	Motorola	HD6000	4451-51
		MCA6000	★ **4720**
		TCF6000	1469-121
	Omnibyte	OB6000	2009-36
	Signetics	**TEA6000**	★ **3727**
			★ **3733**
			3321-144
	Telesis	EDA-6000	4935-2
	VTI	**VGC6000**	★ **4805**
			4458-14
60001	Mitsubishi	M60001	4450-40

Arranged alphanumerically from left to right.

PART NUMBER INDEX

Base Number	Source	Device	Page-Line
60002	Mitsubishi	M60002	4450-42
		M60002A	4450-43
60003	Mitsubishi	M60003	4451-2
		M60003A	4451-3
60004	Mitsubishi	M60004	4451-5
60005	Mitsubishi	M60005	4451-7
60007	Mitsubishi	M60007	4451-9
60008	Mitsubishi	M60008	4451-10
60009	Mitsubishi	M60009	4451-12
6000C2	Vatic	M6000C2	4458-6
6001	Fujitsu	MB6001	3379-43
	NCM	6001Z	3319-121
	Telmos	TMG6001	4465-14
60011	Mitsubishi	M60011	4450-41
60012	Mitsubishi	M60012	4451-1
60013	Mitsubishi	M60013	4451-4
60014	Mitsubishi	M60014	4451-6
60015	Mitsubishi	M60015	4451-8
60016	Mitsubishi	M60016	4451-11
60017	Mitsubishi	M60017	4451-13
60018	Mitsubishi	M60018	4451-14
60019	Mitsubishi	M60019	4451-15
6002	Fujitsu	MB6002	3379-44
	ITT	SAA6002	3378-36
	Telmos	TMG6002	4465-16
6003	Telmos	TMG6003	4465-15
6004	Telmos	TMG6004	4465-17
6005	Telmos	TMG6005	4465-12
6006	Telmos	TMG6006	4465-13
6007	Telmos	TMG6007	4465-11
600A2	Vatic	B600A2	4457-39
601	Motorola	MHW601	3307-111
		MVME601	★ **2112**
			2031-34
	SGS	L601	3311-25
	SiliconG	SM601	3396-107
	TeledyneC	CAM601A	2830-95
	Unitrode	PIC601	3397-12
6010	Hughes	HCTR6010	816-10
6012	AMD	AM6012	¶ 386-15
		AM6012C	2861-3
		AM6012M	2863-1
	Intech	AM6012	¶ 386-16
	Maxim	AM6012AC	2866-14
		AM6012AM	2866-15
		AM6012C	2866-16
		AM6012M	2866-17
	MCE	MCE6012C	2863-2
		MCE6012M	2863-3
	NEC	μPC6012	2862-49
	Raytheon	**DAC-6012AC**	★ **3663**
			2868-18
		DAC-6012AM	★ **3663**
			2868-19
		DAC-6012C	★ **3663**
			2868-20
		DAC-6012M	★ **3663**
			2868-21
	Signetics	**AM6012**	★ **3720**
			★ **3725**
			2868-26
602	AD	RTI-602	2044-19
	Motorola	MHW602	3307-112
	SGS	L602	3311-26
	Signetics	**NE602**	★ **3694**
			★ **3727**
			3398-71
		SA602	★ **3694**
			★ **3727**
			3398-72
	SiliconG	SM602	3396-108
	Unitrode	PIC602	3397-13
6020	AD	AD6020K	2832-15
	Siemens	SDA6020	843-159
			2832-17
6021	**Fujitsu**	**MB6021**	★ **1611**
			3377-116
6022	**Fujitsu**	**MB6022**	★ **1611**
			3377-60
	Samsung	KS6022	3320-1
6024	**Fujitsu**	**MB6024**	★ **1611**
			3377-117
	Samsung	KS6024	3320-2
603	Dionics	DI603A	2876-129
	Motorola	MHW603	3307-113
			(Continued)

Base Number	Source	Device	Page-Line
603	NEC	μPC603	2849-35
	SGS	L603	3311-27
604	Dionics	DI604A	2876-130
	Harris	**HM604**	★ **1631**
	SGS	L604	3311-28
	Signetics	**NE604**	★ **3695**
			★ **3727**
			3322-35
		SA604	★ **3695**
			★ **3727**
			3322-36
	TeledyneC	CAM604A	2829-33
605	**Burr-Brown**	**OPA605**	★ **3150**
			3331-56
			3334-244
		OPA605A	★ **3150**
			3344-14
		OPA605B	★ **3150**
			3342-12
		OPA605C	★ **3150**
			3342-10
		OPA605H	★ **3150**
			3344-15
		OPA605J	★ **3150**
			3342-13
		OPA605K	★ **3150**
			3342-11
	Dionics	DI605A	2876-131
	Motorola	**MVME605**	★ **2112**
	Reticon	RM605	3377-24
6052	**OKI**	**MSM6052**	★ **4732**
6059	**Goldstar**	**GM6059**	★ **3580**
			3382-60
606	**Burr-Brown**	**OPA606KM**	★ **3149**
			★ **3150**
			3345-17
		OPA606KP	★ **3149**
			★ **3150**
			3346-164
		OPA606L	★ **3149**
			★ **3150**
			3337-32
		OPA606S	★ **3149**
			★ **3150**
			3345-18
6064	Davidge	DSB-6064	2005-11
60650	**RCA**	**PA60650**	★ **4742**
			4454-14
6070	AMD	AM6070C	2856-9
			2869-39
		AM6070M	2856-10
			2869-40
	Intech	Am6070	¶ 389-1
6071	Intech	Am6071	¶ 389-1
6072	AMD	AM6072C	2856-4
			2869-36
		AM6072M	2856-5
			2869-37
	Intech	Am6072	¶ 389-1
6076	**Goldstar**	**GM6076**	★ **3580**
			3378-130
6078	**RCA**	**CA6078A**	★ **3674**
			3347-26
608	**Datel**	**DAC-608**	★ **3157**
			★ **3162**
			2854-10
6080	AMD	AM6080C	2852-35
		AM6080M	2852-36
	Calmos	CA6080	4441-10
	IMI	IMI6080	4449-22
	S-MOS	**SLA6080**	★ **4752**
			4456-3
6081	AMD	AM6081C	2852-37
		AM6081M	2852-38
6086	**MMI**	**6086**	★ **1103**
			877-90
6087	**MMI**	**6087**	★ **1103**
			877-91
61	Hitachi	HD61J	4447-3
		HD61K	4447-8
		HD61L	4447-11
		HD61MM	4447-13
610	**Datel**	**DAC-610**	★ **3157**
			★ **3162**
			2858-20
	Maxim	MAX610	3405-55
			(Continued)

Base Number	Source	Device	Page-Line
610	**Motorola**	**MVME610**	★ **2112**
			2044-9
	National	CIM-610	2030-31
	NEC	μPC610	2859-60
		μPD610	3326-1
	Plessey	SL610C	3308-8
	SiliconG	SM610	3396-109
	Unitrode	PIC610	3397-14
6100	Harris	HM6100	1433-30
	Intech	UDN-6100A	¶ 398-18
	Sprague	UDN-6100A	¶ 402-13
		UDN6100A	¶ 398-8
	TI	TMS6100	3323-148
	Toshiba	TD6100	862-5
61001	TI	VM61001	3323-99
61002	TI	VM61002	3323-100
61003	TI	VM61003	3323-101
61004	TI	VM61004	3323-102
61005	TI	VM61005	3323-103
6101	NEC	μPB6101	4452-27
6102	NEC	μPB6102	4452-29
		μPD6102	3323-22
6103	NEC	μPB6103	4452-31
6104	Toshiba	TD6104	3322-88
	UMC	UM6104	3836-81
6105	NEC	μPD6105	3326-2
6108	AMD	AM6108C	2834-1
	Intersil	IH6108C	2830-162
		IH6108M	2830-155
	Maxim	IH6108C	2830-163
		IH6108M	2830-156
	Motorola	**MC6108A**	★ **3629**
			2834-2
6109	Toshiba	TD6109	849-114
			891-61
611	**AD**	**AD611K**	★ **3503**
			★ **3507**
			3340-100
	Maxim	MAX611	3405-57
	Plessey	SL611C	3308-9
	SiliconG	SM611	3396-110
	Unitrode	PIC611	3397-15
6111	NEC	μPB6111	4452-33
6112	AMD	AM6112	2844-23
6116	**CTI**	**MA6116**	★ **4001**
	Hitachi	HM6116-2	3838-27
		HM6116-3	3838-59
		HM6116-4	3838-109
	Hyundai	HY6116-12	3838-28
		HY6116-55	3837-72
		HY6116-7	3837-89
		HY6116-9	3837-103
		HY6116L-12	3838-29
		HY6116L-9	3837-104
	IDT	**IDT6116L-120**	★ **4059**
			3838-30
		IDT6116L-120B	★ **4059**
			3838-31
		IDT6116L-150	★ **4059**
			3838-60
		IDT6116L-150B	★ **4059**
			3838-61
		IDT6116L-50	★ **4059**
			3837-65
		IDT6116L-55	★ **4059**
			3837-73
		IDT6116L-55B	★ **4059**
			3837-74
		IDT6116L-65	★ **4059**
			3837-85
		IDT6116L-70	★ **4059**
			3837-90
		IDT6116L-70B	★ **4059**
			3837-91
		IDT6116L-90	★ **4059**
			3837-105
		IDT6116L-90B	★ **4059**
			3837-106
		IDT6116S-120	★ **4059**
			3838-32
			3838-33
		IDT6116S-120B	★ **4059**
			3838-34
			(Continued)

Base Number	Source	Device	Page-Line
6116	**IDT**	**IDT6116S-150**	★ **4059**
			3838-62
		IDT6116S-150B	★ **4059**
			3838-63
		IDT6116S-50	★ **4059**
			3837-66
		IDT6116S-55	★ **4059**
			3837-75
		IDT6116S-55B	★ **4059**
			3837-76
		IDT6116S-65	★ **4059**
			3837-86
		IDT6116S-70	★ **4059**
			3837-92
		IDT6116S-70B	★ **4059**
			3837-93
		IDT6116S-90	★ **4059**
			3837-107
		IDT6116S-90B	★ **4059**
			3837-108
	Intersil	IH6116C	2831-84
		IH6116M	2831-85
	Mostek	MKB6116-82	3838-68
		MKB6116-83	3838-113
		MKB6116-84	3839-29
		MKB6116L-82	3838-69
		MKB6116L-83	3838-114
		MKB6116L-84	3839-30
	Motorola	**MCM6116**	★ **4119**
	RCA	**CDM6116A-2**	★ **1673**
			★ **1676**
			★ **1678**
			3838-121
		CDM6116A-3	★ **1673**
			★ **1676**
			★ **1678**
			3838-73
		CDM6116A-9	★ **1673**
			★ **1676**
			★ **1678**
			3839-34
	Sprague	**UDN-6116**	★ **3269**
			2876-147
		UDN-6116A	¶ 399-9
		UDN-6116A-1 to 7186A	¶ 398-7
	SSS	SCM6116-1	3838-1
		SCM6116-2	3838-35
		SCM6116-3	3838-83
		SCM6116L-1	3838-2
		SCM6116L-2	3838-36
		SCM6116L-3	3838-84
	UMC	UM6116-3	3837-109
		UM6116-4	3837-96
		UM6116-5	3837-82
6117	**RCA**	**CDM6117A-3**	★ **1673**
			★ **1676**
			3838-74
6118	**Exar**	**XR6118**	★ **3554**
			2877-37
	RCA	**CDM6118A-3**	★ **1673**
			★ **1676**
			3838-75
	Sprague	**UDN-6118**	★ **3269**
			2877-41
612	**Datel**	**DAC-612**	★ **3157**
			★ **3162**
			2866-18
	Maxim	MAX612	3405-56
	National	CIM-612	2030-32
	Plessey	SL612C	3308-10
	RTC	MS612	837-11
			3857-7
	Signetics	**NE612**	★ **3727**
		SA612	★ **3727**
	SiliconG	SM612	3396-111
	Unitrode	PIC612	3397-16
6120	NEC	μPB6120	4452-38
61200	**RCA**	**PA61200**	★ **4742**
			4454-11
6125	OEI	6125A	3399-128
	TI	TMS6125	3323-149
61256	Hitachi	HN61256	3853-35
			3853-39
6126	**Sprague**	**UDN-6126**	★ **3269**

¶ Indicates page number in Application Note Directory.
★ Indicates additional data is provided on the page noted.

Base Number	Source	Device	Page-Line
6128	Davidge	DSB-6128	2005-12
	Exar	**XR6128**	★3554 2877-38
	Sprague	**UDN-6128**	★3269 2877-42
613128	Hitachi	HN613128	3852-17
		HN613128H-20	3851-123
6132	Zilog	Z6132	¶ 439-15
613256	Hitachi	HN613256	3852-118
61364	Hitachi	HN61364	3850-96
61365	Hitachi	HN61365	3850-90
61366	Hitachi	HN61366	3850-91
6138	**Sprague**	**UDN-6138**	★3269 2877-43
614	**Signetics**	**NE614**	★3727
		SA614	★3727
6140	Calmos	CA6140	4441-14
	IMI	IMI6140	4449-25
	S-MOS	**SLA6140**	★4752 4456-5
614042	Hitachi	HD614042	1451-57
6147	Hitachi	HM6147H	3840-21
		HM6147H-35	3839-92
		HM6147H-45	3839-108
		HM6147H-55	3839-121
	Motorola	**MCM6147-55**	★4119 3839-122
		MCM6147-70	★4119 3840-22
6148	AMD	AM6148C	2833-43
	Hitachi	HM6148H-35	3835-69
		HM6148H-45	3835-89
		HM6148H-55	3835-114
	Sprague	**UDN-6148**	★3269
614P080	Hitachi	HD614P080C	1405-35
		HD614P080S	1405-36
615	**Motorola**	**MVME615**	★2112 2044-10
6152	**Hughes**	**HHGA6152**	★ 683 4447-34
		HVGA6152	★ 683 4447-33
616	IDT	IDT616LA-45	3841-62
	Motorola	**MVME616**	★2112 2044-11
6164	Motorola	MCM6164-45	3842-126
		MCM6164-55	3842-134
		MCM6164-70	3843-5
6167	Hitachi	HM6167H	3844-63
		HM6167H-45	3844-28
		HM6167H-55	3844-46
		HM6167H-70	3847-41
	Honeywell	HC6167R	3844-92
	IDT	**IDT6167L-100**	★4056 3844-87
		IDT6167L-100B	★4056 3844-88
		IDT6167L-45	★4056 3844-30
		IDT6167L-55	★4056 3844-47
		IDT6167L-55B	★4056 3844-48
		IDT6167L-70	★4056 3844-64
		IDT6167L-70B	★4056 3844-65
		IDT6167L-85	★4056 3844-82
		IDT6167L-85B	★4056 3844-83
		IDT6167LA-25	★4056 3843-109
		IDT6167LA-35B	★4056 3844-15
		IDT6167LA-45B	★4056 3844-31
		IDT6167S-100	★4056 3844-89
		IDT6167S-100B	★4056 3844-90 (Continued)
6167	**IDT**	**IDT6167S-45**	★4056 3844-32
		IDT6167S-55	★4056 3844-49
		IDT6167S-55B	★4056 3844-50
		IDT6167S-70	★4056 3844-66
		IDT6167S-70B	★4056 3844-67
		IDT6167S-85	★4056 3844-84
		IDT6167S-85B	★4056 3844-85
		IDT6167SA-25	★4056 3843-110
		IDT6167SA-35B	★4056 3844-16
		IDT6167SA-45B	★4056 3844-33
	UMC	UM6167	3844-68
		UM6167-1	3844-52
		UM6167-2	3844-35
6168	Hitachi	HM6168H-45	3841-56
		HM6168H-55	3841-100
		HM6168H-70	3842-39
	IDT	IDT6168	¶ 438-9
		IDT6168L-100	★4057 3842-92
		IDT6168L-100B	★4057 3842-93
		IDT6168L-45	★4057 3841-57
		IDT6168L-55	★4057 3841-101
		IDT6168L-55B	★4057 3841-102
		IDT6168L-70	★4057 3842-40
		IDT6168L-70B	★4057 3842-41
		IDT6168L-85	★4057 3842-79
		IDT6168L-85B	★4057 3842-80
		IDT6168LA-25	★4057 3840-123
		IDT6168LA-35	★4057 3841-19
		IDT6168LA-35B	★4057 3841-20
		IDT6168LA-45B	★4057 3841-58
		IDT6168LA-55	★4057 3841-103
		IDT6168LA-55B	★4057 3841-104
		IDT6168LA-70	★4057 3842-42
		IDT6168LA-70B	★4057 3842-43
		IDT6168S-100	★4057 3842-94
		IDT6168S-100B	★4057 3842-95
		IDT6168S-45	★4057 3841-59
		IDT6168S-55	★4057 3841-105
		IDT6168S-55B	★4057 3842-1
		IDT6168S-70	★4057 3842-44
		IDT6168S-70B	★4057 3842-45
		IDT6168S-85	★4057 3842-81
		IDT6168S-85B	★4057 (Continued)
6168	IDT	IDT6168S-85B	3842-82
		IDT6168SA-25	★4057 3841-1
		IDT6168SA-35	★4057 3841-21
		IDT6168SA-35B	★4057 3841-22
		IDT6168SA-45	★4057 3841-60
		IDT6168SA-45B	★4057 3841-61
		IDT6168SA-55	★4057 3842-2
		IDT6168SA-55B	★4057 3842-3
		IDT6168SA-70	★4057 3842-46
		IDT6168SA-70B	★4057 3842-47
	Motorola	**MCM6168-35**	★4119 3841-25
		MCM6168-45	★4119 3841-65
		MCM6168-55	★4119 3842-5
		MCM6168-70	★4119 3842-48
	UMC	UM6168	3842-50
		UM6168-1	3842-8
		UM6168-2	3841-68
6169	Motorola	MCM6169-35	3841-26
		MCM6169-45	3841-66
		MCM6169-55	3842-6
		MCM6169-70	3842-49
6170	Calmos	CA6170	4441-16
	IMI	IMI6170	4449-28
	Motorola	MC6170	3380-43
	S-MOS	**SLA6170**	★4752 4456-6
6172	**Motorola**	**MC6172**	★3633 3379-19 ¶ 410-9
6173	**Motorola**	**MC6173**	★3633 3380-73 ¶ 410-9
6174	Teltone	TT6174	3381-140
6177	Teltone	TT6177	3377-32
6178	Motorola	MCM6178-35	3841-30
		MCM6178-45	3841-71
		MCM6178-55	3842-9
		MCM6178-70	3842-51
618	RTC	MS618	837-28 3809-19
61825	Hitachi	HD61825A	3378-74
		HD61825B	3378-75
6190	Motorola	MC6190	3324-46 3326-124
6191	Motorola	MC6191	3324-47 3326-125
6192	Motorola	MC6192	3324-48 3326-126
6193	Motorola	MC6193	3324-49 3326-127
6194	Motorola	MC6194	3324-50 3326-128
6195	Motorola	MC6195	3324-51 3375-123
6196	Motorola	MC6196	3324-52 3375-124
61H04	Hitachi	HG61H04	4447-2
61H06	Hitachi	HG61H06	4447-5
61H09	Hitachi	HG61H09	4447-7
61H15	Hitachi	HG61H15	4447-10
61H20	Hitachi	HG61H20	4447-12
61H25	Hitachi	HG61H25	4447-14
61L16	**Motorola**	**MCM61L16**	★4119
61L47	**Motorola**	**MCM61L47-55**	★4119 3839-123
		MCM61L47-70	★4119 3840-23
62	**Burr-Brown**	**VFC62**	★3148 3405-96
620	**Motorola**	**MVME620**	★2112 2044-23
	Plessey	SL620C	3306-4
6200	AMCC	Q6200C	4439-15
	Siemens	TDA6200	3326-93
6201	**Intersil**	**IH6201**	★3196 2828-105
		IH6201C	★3196 2896-108
		IH6201M	★3196 2896-109
6202	OKI	MSM6202	3323-143
6203	OKI	MSM6203	807-105
6206	**Motorola**	**HCA6206**	★4718 4451-36
	NCR	**HCA6206**	★4729 4452-18
6208	Intersil	IH6208C	2830-53
		IH6208M	2830-48
	Maxim	IH6208C	2830-54
		IH6208M	2830-49
621	Plessey	SL621C	3306-3
62100	**Goldstar**	**GM62100**	★3580 2829-14 3378-8
6212	**Motorola**	**HCA6212**	★4718 4451-40
	National	SCX6212	4452-2
	NCR	**HCA6212**	★4729 4452-20
	OKI	**MSM6212**	★4733 3323-144
	SGS	L6212	3323-146
6216	Intersil	IH6216C	2831-25
		IH6216M	2831-26
6222	**OKI**	**M6222**	★4733 2874-64
6224	National	SCX6224	4452-4
6225	**Motorola**	**HCA6225**	★4718 4451-45
	National	SCX6225	4452-6
	NCR	**HCA6225**	★4729 4452-23
62256	**Hitachi**	**HM62256-10**	★4033 3846-47
		HM62256-12	★4033 3846-51
		HM62256-8	★4033 3846-42
6227	**MicroNet**	**MN6227**	★3203
623	Plessey	SL623C	3321-47
62300	**Goldstar**	**GM62300**	★3580 2829-15 3378-19
62301	Hitachi	HN62301	3853-101
		HN62301S-25	3853-85
6238	**Motorola**	**HCA6238**	★4718 4451-48
	NCR	**HCA6238**	★4729 4452-24
6239	**OKI**	**M6239**	★4733
624	**AD**	**AD624A**	★3510 3306-124 3340-65
		AD624B	★3510 3306-125 3339-10
		AD624C	★3510 3306-126 3337-46
		AD624S	★3510 3306-127 3339-50
	NEC	µPC624	2852-26
	Telefunken	U624BS	891-23
6240	**OKI**	**M6240**	★4733 2874-66
6243	**OKI**	**MSM6243**	★4733 3323-145
6248	**Motorola**	**HCA6248**	★4718 4451-49
	National	SCX6248	4452-8
	NCR	**HCA6248**	★4729 4452-25
625	**AD**	**AD625**	★3511 3306-90 (Continued)

Arranged alphanumerically from left to right.

Base Number	Source	Device	Page-Line
625	**Motorola**	**MVME625**	★**2112**
			2044-24
	RTC	MS625	837-29
			3857-35
	Unitrode	PIC625	3397-17
6250	**OKI**	**MSM6250**	★**4733**
6252	**OKI**	**MSM6252**	★**4732**
6253	**OKI**	**MSM6253**	★**4733**
			3323-115
6254	**OKI**	**MSM6254**	★**4733**
			3382-55
			1468-77
6255	**OKI**	**M6255**	★**4733**
			2874-67
6256	Davidge	DSB-6256	2005-13
	Motorola	**MCM6256-10**	★**4118**
			3828-94
		MCM6256-12	★**4118**
			3829-12
		MCM6256-15	★**4118**
			3829-46
6257	**Motorola**	**MCM6257-10**	★**4118**
			3828-95
		MCM6257-12	★**4118**
			3829-13
		MCM6257-15	★**4118**
			3829-47
6258	**OKI**	**MSM6258**	★**4733**
626	Telefunken	U626BS	891-48
	Unitrode	PIC626	3397-18
6260	National	SCX6260	4452-11
6264	Hitachi	HM6264-10	3843-18
		HM6264A-12	3843-34
		HM6264A-15	3843-59
		HM6264A-20	3843-84
		HM6264AL-12	3843-35
		HM6264AL-15	3843-60
		HM6264AL-20	3843-85
		HM6264L-10	3843-19
	RCA	**CDM6264-3**	★**1673**
			★**1676**
			3843-69
		CDM6264-4	★**1673**
			★**1676**
			3843-42
	Samsung	**KM6264-10**	★**4140**
			3843-24
		KM6264-12	★**4140**
			3843-45
		KM6264-15	★**4140**
			3843-71
6265	**OKI**	**M6265**	★**4733**
			2874-63
	Rockwell	R6265	1467-2
6267	Hitachi	HM6267-35	3844-14
		HM6267-45	3844-29
627	Unitrode	PIC627	3397-19
6270	Calmos	CA6270	4441-20
	IMI	IMI6270	4449-33
	Plessey	SL6270	3306-5
	S-MOS	**SLA6270**	★**4752**
			4456-8
6281	**OKI**	**MSM6281**	★**4733**
			1466-116
6284	**OKI**	**M6284**	★**4733**
6285	**OKI**	**M6285**	★**4733**
6286	**OKI**	**M6286**	★**4733**
6287	Hitachi	HM6287-45	3847-7
		HM6287-55	3847-27
		HM6287-70	3847-46
	Motorola	MCM6287-35	3846-98
		MCM6287-45	3847-15
		MCM6287-55	3847-34
6288	Motorola	MCM6288-35	3844-104
		MCM6288-45	3845-2
		MCM6288-55	3845-34
6291	**OKI**	**MSM6291**	★**4733**
			1466-115
62C42	**OKI**	**MSM62C42**	★**4732**
63	**Burr-Brown**	**DAC63**	★**3146**
			844-42
			¶ 388-5
			2861-32
		DAC63S	★**3146**
			2861-35
630	**AD**	**AD630**	★**3517**
			★**3523**
			3398-73
	Maxim	MAX630	3396-13
	National	CIM-630	2030-33
6300	AMD	AM6300	¶ 424-12
	Lambda	LAS6300	¶ 392-2
			¶ 392-20
			¶ 422-6
			¶ 427-7
			¶ 427-8
			¶ 427-9
		LAS6300L	3395-153
	MMI	**6300**	★**4102**
6301	AMD	AM6301	¶ 424-14
		Am6301	¶ 424-2
	Hitachi	HD6301V	1419-22
	MMI	**6301**	★**4102**
	Toshiba	TD6301A	3321-71
6303	Hitachi	HD6303	1454-99
			1419-23
		HD6303R	1454-18
		HD6303X	1454-81
6304	Toshiba	TD6304A	3324-2
6305	Hitachi	HD6305V	1419-24
	MMI	**6305**	★**4102**
6305Y2	Hitachi	HD6305Y2	1419-25
6306	**MMI**	**6306**	★**4102**
	Motorola	**HCA6306**	★**4718**
			4451-37
	National	SCX6306	4452-1
	NCR	**HCA6306**	★**4729**
			4452-19
6308	**MMI**	**6308**	★**4102**
	Toshiba	TD6308A	3324-3
6309	Hitachi	HD6309E	1454-74
	MMI	**6309**	★**4102**
	Toshiba	TD6309	3324-4
631	Maxim	MAX631	3405-27
	National	CIM-631	2030-34
6310	Plessey	SL6310	3307-58
63100	**S-MOS**	**SMM63100C**	★**4178**
			★**4179**
			3853-87
63102	DDC	BUS-63102	2901-91
63105	DDC	BUS-63105	2901-47
6311	NEC	µPB6311	4452-34
6312	**Motorola**	**HCA6312**	★**4718**
			4451-41
	National	SCX6312	4452-3
	NCR	**HCA6312**	★**4729**
			4452-21
63128	**Motorola**	**MCM63128-15**	★**4120**
			3851-114
		MCM63128-175	
			★**4120**
			3851-122
		MCM63128-20	★**4120**
			3852-3
6313	**S-MOS**	**SMM6313-25**	★**4178**
			3852-20
632	AD	AD632	3400-122
	Maxim	MAX632	3405-28
6320	Lambda	LAS6320	3395-154
			¶ 390-1
			¶ 392-2
6321	Hitachi	HD6321	1455-45
			1469-127
	NEC	µPB6321	4452-37
6324	**Motorola**	**HCA6324**	★**4718**
			4451-43
	National	SCX6324	4452-5
			¶ 443-3
			¶ 444-6
	NCR	**HCA6324**	★**4729**
			4452-22
6325	National	SCX6325	4452-7
	S-MOS	**SMM6325**	★**4178**
			3852-122
63256	**Motorola**	**MCM63256-15**	★**4120**
			3852-84
		MCM63256-175	
			★**4120**
			3852-90
		MCM63256-20	★**4120**
			3852-101
6326	**S-MOS**	**SMM6326**	★**4178**
			3852-123
633	Maxim	MAX633	3405-29
6330	Calmos	CA6330	4441-22
	IMI	IMI6330	4449-34
	Lambda	LAS6330A	3395-155
	MMI	**6330**	★**4102**
	NEC	µPB6330	4453-4
	S-MOS	**SLA6330**	★**4752**
			4456-10
6331	Lambda	LAS6331A	3395-156
	MMI	**6331**	★**4102**
6332	Lambda	LAS6332A	3395-157
6336	**MMI**	**6336**	★**4102**
634	**Burr-Brown**	**MPY634**	★**3151**
			3401-14
	Maxim	MAX634	3396-14
6340	Hitachi	HD6340	1470-17
	NEC	µPB6340	4453-7
6341	**MMI**	**6341**	★**4102**
63463	Hitachi	HD63463	1466-65
6348	**MMI**	**6348**	★**4102**
	Motorola	**HCA6348**	★**4718**
			4451-50
	National	SCX6348	4452-9
	NCR	**HCA6348**	★**4729**
			4452-26
63484	**Hitachi**	**HD63484**	★**1633**
			1465-76
6349	**MMI**	**6349**	★**4102**
635	Maxim	MAX635	3405-24
	Unitrode	PIC635	3397-20
6350	Hitachi	HD6350	1454-126
			1469-89
	Lambda	LAS6350	3395-158
	NEC	µPB6350	4453-10
6351	Lambda	LAS6351	3395-159
6352	Lambda	LAS6352	3395-160
	MMI	**6352**	★**4102**
6353	**MMI**	**6353**	★**4102**
636	AD	636	¶ 390-12
			¶ 391-18
			¶ 392-1
		AD636J	3403-141
		AD636K	3403-142
	Maxim	MAX636	3405-25
	Telefunken	U636BS	891-49
	Unitrode	PIC636	3397-21
6360	National	SCX6360	4452-10
637	AD	637	¶ 390-12
			¶ 391-18
			¶ 392-1
		AD637J	★**3517**
			★**3522**
			3403-143
		AD637K	★**3517**
			★**3522**
			3403-144
	Maxim	MAX637	3405-26
	Unitrode	PIC637	3397-22
63701	**Hitachi**	**HD63701X**	★**1634**
			1419-26
63705	**Hitachi**	**HD63705V**	★**1635**
			1419-27
6376	National	DH6376C	3310-46
6380	Lambda	LAS6380	3395-161
6381	Lambda	LAS6381	3395-162
	MMI	**6381**	★**4102**
6389	**MMI**	**6389**	★**4102**
639	**AD**	**AD639A**	★**3517**
			★**3524**
			3405-17
		AD639B	★**3517**
			★**3524**
			3405-18
		AD639S	★**3517**
			★**3524**
			3405-19
63A03	Hitachi	HD63A03R	1454-19
		HD63A03X	1454-82
63A21	Hitachi	HD63A21	1455-46
			1469-128
63A40	Hitachi	HD63A40	1470-18
63A50	Hitachi	HD63A50	1454-127
			1469-90
63B03	Hitachi	HD63B03R	1454-20
		HD63B03X	1454-83
63B21	Hitachi	HD63B21	1455-47
			1469-129
63B50	Hitachi	HD63B50	1454-128
			1469-91
63D1641			
	MMI	**63D1641**	★**4101**
			★**4103**
			★**4109**
			3819-104
63DA1643			
	MMI	**63DA1643**	★**4101**
			★**4103**
			3819-105
63DA441			
	MMI	**63DA441**	★**4101**
			★**4103**
			3816-77
63DA442			
	MMI	**63DA442**	★**4101**
			★**4103**
			3816-78
63DA841			
	MMI	**63DA841**	★**4101**
			★**4103**
			3817-164
63P01M1			
	Hitachi	HD63P01M1	1419-28
63P05Y0			
	Hitachi	HD63P05Y0	1419-29
63RA1681			
	MMI	**63RA1681**	★**4101**
			★**4103**
			★**4107**
			3818-66
		63RA1681A	★**4101**
			★**4103**
			★**4107**
			3818-60
63RA481			
	MMI	**63RA481**	★**4101**
			3815-76
		63RA481A	★**4101**
			3815-72
63RS1681			
	MMI	**63RS1681**	★**4101**
			3818-67
		63RS1681A	★**4101**
			3818-61
63RS881			
	MMI	**63RS881**	★**4101**
			★**4103**
			3817-61
		63RS881A	★**4101**
			★**4103**
			3817-59
63S080	**MMI**	**63S080**	★**4101**
			★**4102**
			3814-17
63S081	**MMI**	**63S081**	★**4101**
			★**4102**
			3814-20
		63S081A	★**4101**
			★**4102**
			3814-8
63S140	**MMI**	**63S140**	★**4101**
			★**4102**
			3814-97
63S141	**MMI**	**63S141**	★**4101**
			★**4102**
			3814-100
		63S141A	★**4101**
			★**4102**
			3814-82
63S1641			
	MMI	**63S1641**	★**4101**
			★**4103**
			3820-13
		63S1641A	★**4101**
			★**4103**
			3819-120
63S1681			
	MMI	**63S1681**	★**4101**
			★**4103**
			3819-17
		63S1681A	★**4101**
			(Continued)

¶ Indicates page number in Application Note Directory.
★ Indicates additional data is provided on the page noted.

Base Number	Source	Device	Page-Line
63S1681			
	MMI	**63S1681A**	★4103 3818-96
63S240	**MMI**	**63S240**	★4101 ★4102 3815-32
63S241	**MMI**	**63S241**	★4101 ★4102 3815-35
		63S241A	★4101 ★4102 3815-26
63S280	**MMI**	**63S280**	★4101 ★4102 3815-10
63S281	**MMI**	**63S281**	★4101 ★4102 3815-12
		63S281A	★4101 ★4102 3815-5
63S285	MMI	63S285	3815-13
63S3281			
	MMI	**63S3281**	★4101 ★4103 3820-45
		63S3281A	★4101 ★4103 3820-33
63S440	**MMI**	**63S440**	★4101 ★4102 3816-103
63S441	**MMI**	**63S441**	★4101 ★4102 3817-5
		63S441A	★4101 ★4102 3816-94
63S480	**MMI**	**63S480**	★4101 ★4102 3816-1
63S481	**MMI**	**63S481**	★4101 ★4102 3816-8
		63S481A	★4101 ★4102 3815-86
63S485	MMI	63S485	3816-15 ★4102
63S6481			
	MMI	63S6481	3821-40
		63S6481A	3821-41
63S841	**MMI**	**63S841**	★4101 ★4102 3818-23
		63S841A	★4101 ★4102 3818-9
63S881	**MMI**	**63S881**	★4101 ★4102 3817-94
		63S881A	★4101 ★4102 3817-67
63SDA441			
	MMI	**63SDA441**	★4101
63SDA442			
	MMI	**63SDA442**	★4101
64	AppBusComp	MB-64	2031-9
	Cortex	Cortex64Q	2013-15
	Cromemco	64FDC	2038-14
		64KZ-11	2038-39
	Fairchild	F64K-12	3827-23
		F64K-15	3827-45
		F64K-20	3827-73
	IndComp	A/D64-100	2038-15
		D/A64-100	2038-18
	Intelicom	CMOS-64K	2041-51
	Lattice	PR64K-45	3813-6
		PR64K-55	3813-10
		PR64K-70	3813-12
	LMS	NVRD64	3813-101
	MicroTech	CCD64	3398-62
	Onset	DS-64	2030-8
		MEM-64	2030-13
	RELMS	rMEM64K-BE	2036-37

(Continued)

Base Number	Source	Device	Page-Line
64	RELMS	rMEM64K-D	2036-39
	Reticon	RL64A	3400-43
		RL64W	3400-44
		R064	3400-9
	Siliconix	VN64GA	¶ 424-17
	VersaLogic	VID-64	2039-29
	WinSystems	MCM-DRAM 64	2041-63
640	Matrox	PG-640	2031-16
	Plessey	SL640C	3398-78
6400	Faraday	FE6400	2007-37
64000	HP	HP64000	1813-17
6401	National	SHM6401	3404-59
6402	Harris	HD6402	¶ 396-11
		HD6402-2	★1624 2901-78 1462-110
	Intersil	**IM6402**	★1645 2901-79 1462-111
		IM6402-1I	★1645 1462-112
		IM6402-1M	★1645 1462-113
		IM6402AI	★1645 1462-114
		IM6402AM	★1645 1462-115
		IM6402M	★1645 2901-80
	RCA	**CDP6402D**	★1673 ★1679 2901-83
		CDP6402E	★1673 ★1679 2901-84
	Sanyo	LM6402	1450-29
6403	**Intersil**	**IM6403**	★1645 2901-81 1462-116
		IM6403-1I	★1645 1462-117
		IM6403AI	★1645 1462-118
		IM6403AM	★1645 1462-119
		IM6403M	★1645 2901-82
6404	**OKI**	**MSM6404**	★4732
6405	Sanyo	LM6405	1450-30
6406	**Harris**	**HD6406**	★1624 ★1630 2901-74 ★1624 ★1630 1461-125
6408	Harris	6408	¶ 400-3
		HD6408	★1624 2900-18
		HD6408-9	★1624 837-51
6409	**Harris**	**HD6409**	★1625 838-12 ¶ 396-2
		HD6409-2	★1625 2900-87
641	Plessey	SL641C	3398-79
6410	Faraday	FE6410	2007-38
64100	DDC	BUS-64100	2901-6
64180	**Hitachi**	**HD64180**	★1632 1460-10
642	**AD**	**AD642J**	★3507 3362-46
		AD642K	★3507 3362-15
		AD642L	★3507 3361-29
		AD642S	★3507 3362-16
6420	Exar	XR-T6420-1	¶ 413-10
		XRT6420	★3566 3381-27
6421	Exar	XR-T6421	¶ 413-10
		XRT6421	3381-28
6425	Exar	XRT6425	3381-26

Base Number	Source	Device	Page-Line
6430	Calmos	CA6430	4441-23
	IMI	IMI6430	4449-35
	S-MOS	**SLA6430**	★4752 4456-11
6431	Harris	HD6431-2	819-62 1462-106
	OKI	**MSM6431**	★4732
6432	AppBusComp	PP-6432	2031-6
	Dense-Pac	**DPV6432**	★4008 3825-12
	Harris	HD6432-2	819-61 1462-105
6433	Harris	HD6433-2	819-63 1462-109
6434	Harris	HD6434-2	1462-107
		HD6434-9	1462-108
6436	Harris	HD6436-2	1462-121
		HD6436-9	1462-122
644	**AD**	**AD644J**	★3507 3362-47
		AD644K	★3507 3362-17
		AD644L	★3507 3361-28
		AD644S	★3507 3361-30
6440	Harris	HD6440-2	820-5 1462-123
6442	**OKI**	**MSM6442**	★4732
645	**Signetics**	**NE645**	★3727 3316-171
	Unitrode	PIC645	3397-23
646	NEC	μPC646	2848-67
	Signetics	**NE646**	★3727 3316-172
	Telefunken	U646	3307-55
	Unitrode	PIC646	3397-24
6463	Plessey	PSM-6463	2036-59
647	**AD**	**AD647J**	★3502 ★3507 3362-20
		AD647K	★3502 ★3507 3361-25
		AD647L	★3502 ★3507 3361-13
		AD647S	★3502 ★3507 3361-26
		AD647S/883B	★3502 ★3507 3361-27
	NEC	μPC647	2848-68
	Telefunken	U647	3307-56
	Unitrode	PIC647	3397-25
648	NEC	μPC648	2862-50
	Signetics	**NE648**	★3727 3316-173
6482	Motorola	MC6482	857-41
		MC6482A	857-42
		MC6482B	857-43
649	**Signetics**	**NE649**	★3727 3316-174
6495	Harris	HD6495-2	819-176 1462-120
6497	**Toshiba**	**T6497**	★1750 1460-87
64C08	Calmos	CA64C08	3842-114
64E4	**Lattice**	**SR64E4-25C**	★4088 3844-97
		SR64E4-35	★4088 3844-113
		SR64E4-35C	★4088 3844-109
		SR64E4-45	★4088 3845-9
		SR64E4-45C	★4088 3845-7
		SR64E4-55	★4088 3845-38
		SR64E4-55C	★4088 3845-36
64H1	**VTI**	**VT64H1**	★4266 ★4269 3846-99

(Continued)

Base Number	Source	Device	Page-Line
64H1	**VTI**	**VT64H1-35**	★4266 ★4269 3846-100
		VT64H1-45	★4266 ★4269 3847-18
		VT64H1-55	★4266 ★4269 3847-37
64K1	**Lattice**	**SR64K1-25C**	★4089 3846-89
		SR64K1-35	★4089 3846-96
		SR64K1-35C	★4089 3846-97
		SR64K1-45	★4089 3847-13
		SR64K1-45C	★4089 3847-14
		SR64K1-55	★4089 3847-32
		SR64K1-55C	★4089 3847-33
64K4	**Lattice**	**SR64K4-25C**	★4087 3844-95
		SR64K4-35	★4087 3844-102
		SR64K4-35C	★4087 3844-103
		SR64K4-45	★4087 3844-126
		SR64K4-45C	★4087 3845-1
		SR64K4-55	★4087 3845-32
		SR64K4-55C	★4087 3845-33
64K8	**Lattice**	**EE64K8-45**	★4096 3813-7
		EE64K8-55	★4096 3813-11
		EE64K8-70	★4096 3813-14
		PR64K8-45	★4097 3821-36
		PR64K8-55	★4097 3821-49
		PR64K8-70	★4097 3821-66
		SR64K8-35C	★4090 3842-117
		SR64K8-45C	★4090 3842-125
		SR64K8-55C	★4090 3842-133
64KH1	VTI	VT64KH1	3846-101
64KS4	**VTI**	**VT64KS4**	★4265 ★4270 3844-105
64R32	MMI	HAL64R32C	4476-37
		HAL64R32M	4476-38
		PAL64R32C	★4682 4472-82
		PAL64R32M	★4682 4475-5
65	AppBusComp	ASBC-65-64	2007-11
		ASBC-65-8	2007-12
	Golden	GE65-12K	2038-7
	MRCSys	MBK65KBM	2030-75
	RCIData	CMC65/04	2013-22
	Rockwell	AIM 65/40	¶ 412-18
		RM65-1000	2013-19
		RM65-5303E	¶ 364-1
		SYSTEM65	1821-7
650	**AD**	**AD650J**	★3132 ★3134 3405-89
		AD650K	★3132 ★3134 3405-90
		AD650S	★3132 ★3134 3405-91
	Plessey	SL650	3376-34 ¶ 423-9

(Continued)

Arranged alphanumerically from left to right.

Base Number	Source	Device	Page-Line
650	**Signetics**	**NE650**	★3727 3316-175
6500	Cubit	6500	2005-28
	NCR	**NCR6500/1**	★1671 1453-27 1427-5
		NCR6500/11	★1671 1453-94 1427-6
	Rockwell	6500	1821-5
		R6500	1453-56 ¶ 372-5 ¶ 372-9 ¶ 374-2 ¶ 375-8 ¶ 379-15 1429-3
		R6500/1	1429-4 ¶ 364-5 ¶ 368-6 ¶ 397-3
		R6500/1-10	1453-28
		R6500/11	1453-95 ¶ 368-15 ¶ 375-5 1429-5
		R6500/12	1453-96 1429-6
		R6500/13	1453-97 1429-7
		R6500/15	1453-98 1429-8
		R6500/16	1453-99 1429-9
		R6500/1E	1453-112
		R6500/41	1463-60 1468-59 ¶ 375-5 1429-10
		R6500/42	1463-61 1468-60 1429-11
		R6500/43	1463-62 1468-61 1429-12
65002	NEC	μPD65002	4452-30
65003	NEC	μPD65003	4452-28
65004	NEC	μPB65004	4452-32
6501	GenMicro	GMS6501	2030-54
	Rockwell	R6501Q	1453-57 ¶ 368-15
65010	NEC	μPD65010	4452-35
65011	NEC	μPB65011	4452-36
6502	CGRS	6502PDS-8'	1811-10
		6502PDS-Mini	1811-11
	GenMicro	GMS6502	2030-46
	OKI	**MSM6502**	★4732
	Rockwell	R6502	1453-58 ¶ 371-6 ¶ 381-9 1429-13
	TI	6502	¶ 372-13
	UMC	UM6502	1431-31
	VTI	VL6502	1431-34
65020	NEC	μPD65020	4453-1
65021	NEC	μPB65021	4453-3
65022	NEC	μPB65022	4453-2
6503	GenMicro	GMS6503	2030-45
	Rockwell	R6503	1453-59
65030	NEC	μPB65030	4453-5
65031	NEC	μPB65031	4453-6
6504	GenMicro	GMS6504	2030-62
	Harris	**HM6504-5**	★682 ★1631 ★4025 ★4029 ★4654 3840-75
		HM6504-8	★682 ★1631 ★4025 ★4029 ★4654 3840-76
		HM6504-9	★682 ★1631 (Continued)
6504	**Harris**	**HM6504-9**	★4025 ★4029 ★4654 3840-77
		HM6504B-8	★682 ★1631 ★4025 ★4029 ★4654 3840-51
		HM6504B-9	★682 ★1631 ★4025 ★4029 ★4654 3840-52
		HM6504C-9	★682 ★1631 ★4025 ★4029 ★4654 3840-78
		HM6504S-8	★682 ★1631 ★4025 ★4029 ★4654 3840-43
		HM6504S-9	★682 ★1631 ★4025 ★4029 ★4654 3840-44
		HS6504RH	★638 3840-50
		JAN6504	★1631 ★4029
	National	NMC6504-9	3840-79
	Rockwell	R6504	1453-60
65040	NEC	μPD65040	4453-8
65042	NEC	μPB65042	4453-9
6505	GenMicro	GMS6505	2030-74
	Rockwell	R6505	1453-61
	SGS	L6505	1429-19
6506	GenMicro	GMS6506	2007-13
	Rockwell	R6506	1453-62
	SGS	L6506	1453-69
65060	NEC	μPD65060	4453-11
6507	GenMicro	GMS6507	2007-17
	Rockwell	R6507	1453-63
	UMC	UM6507	1431-32
65070	NEC	μPB65070	4453-12
6508	GenMicro	GMS6508	2030-76
	Harris	**HM6508-5**	★4024 3835-2
		HM6508-8	★4024 3834-110
		HM6508-9	★4024 3834-111
		HM6508B-8	★4024 3834-106
		HM6508B-9	★4024 3834-107
		HS6508RH	★640 3835-1
65080	NEC	μPB65080	4453-14
65081	NEC	μPB65081	4453-13
6509	GenMicro	GMS6509	2030-44
650A1	Vatic	M650A1	4457-41
651	**AD**	**AD651J**	★3134 3405-61
		AD651K	★3134 3405-62
		AD651S	★3134 3405-63
	Plessey	SL651	3376-33 ¶ 423-9
	Rockwell	M65-651-3	¶ 375-5
6510	**Sprague**	**UDN-6510**	★3269 2895-63
65100	NEC	μPD65100	4453-16
65101	DDC	BUS-65101	2901-4
	NEC	μPB65101	4453-15
6511	ConnMicro	SBC6511	2005-3
		SBC6511-KA	2005-20 (Continued)
6511	ConnMicro	SBC6511-KB	2005-21
	GenMicro	GMS6511	2030-43
	Rockwell	R6511Q	1453-64 1429-14
65112	DDC	BUS-65112	2901-8
6512	GenMicro	GMS6512	2030-37
	Rockwell	R6512	1453-65
	UMC	UM6512	1431-33
65122	DDC	BUS-65122	2902-3
6513	GenMicro	GMS6513	2030-49
	Rockwell	R6513	1453-66
6514	GenMicro	GMS6514	2030-39
	GouldAMI	S6514	3836-86
	Harris	**HM6514-5**	★682 ★1631 ★4025 ★4029 ★4654 3836-87
		HM6514-9	★682 ★1631 ★4025 ★4029 ★4654 3836-88
		HM6514B-8	★682 ★1631 ★4025 ★4029 ★4654 3836-53
		HM6514B-9	★682 ★1631 ★4025 ★4029 ★4654 3836-54
		HM6514C-9	★682 ★1631 ★4025 ★4029 ★4654 3836-89
		HM6514S-8	★682 ★1631 ★4025 ★4029 ★4654 3836-40
		HM6514S-9	★682 ★1631 ★4025 ★4029 ★4654 3836-41
		HS6514RH	★642 3836-78
		JAN6514	★1631 ★4029
	Rockwell	R6514	1453-67
	Sprague	**UDN-6514**	★3269 2895-64
		UDN-6514A	¶ 398-14
6515	Rockwell	R6515	1453-68
65150	NEC	μPB65150	4453-17
6516	GenMicro	GMS6516	2030-50
	Harris	HM-6516	¶ 437-5
		HM6516-5	★682 ★1631 ★4025 ★4029 ★4654 3838-106
		HM6516-8	★682 ★1631 ★4025 ★4029 ★4654 3838-107
		HM6516-9	★682 ★1631 ★4025 ★4029 ★4654 3838-108
		HM6516B-8	★682 (Continued)
6516	**Harris**	**HM6516B-8**	★1631 ★4025 ★4029 ★4654 3838-25
		HM6516B-9	★682 ★1631 ★4025 ★4029 ★4654 3838-26
65162	**Harris**	**HM65162-8**	★682 ★1631 ★4025 ★4029 ★4654 3837-100
		HM65162-9	★682 ★1631 ★4025 ★4029 ★4654 3837-101
		HM65162B-8	★682 ★1631 ★4025 ★4029 ★4654 3837-87
		HM65162B-9	★682 ★1631 ★4025 ★4029 ★4654 3837-88
		HM65162C-8	★682 ★1631 ★4025 ★4029 ★4654 3838-24
		HM65162C-9	★682 ★1631 ★4025 ★4029 ★4654 3837-102
		HM65162S-9	★682 ★1631 ★4025 ★4029 ★4654 3837-71
6518	**Harris**	**HM6518-5**	★4024 3835-3
		HM6518-8	★4024 3834-113
		HM6518-9	★4024 3834-114
		HM6518B-8	★4024 3834-108
		HM6518B-9	★4024 3834-109
6519	GenMicro	GMS6519B	2030-42
652	Plessey	SL652	3375-39
6520	GenMicro	GMS6520	2030-47
	Rockwell	R6520	1453-122 ¶ 373-9
	UMC	UM6520	1470-4 1469-137
		UM6520A	1470-5 1469-138
65200	NEC	μPB65200	4453-18
65201	DDC	BUS65201	2901-90
6521	UMC	UM6521	1470-6 1469-139
		UM6521A	1470-7 1469-140
6522	GenMicro	GMS6522	2030-67
	Intech	SY6522	¶ 392-11
	Rockwell	R6522	1453-123 ¶ 372-2 ¶ 373-9
	UMC	UM6522	1470-8 1469-141
		UM6522A	1470-9 (Continued)

¶ Indicates page number in Application Note Directory.
★ Indicates additional data is provided on the page noted.

Base Number	Source	Device	Page-Line
6522	UMC	UM6522A	1469-142
	VTI	**VL6522**	★**1751**
			★**1752**
			★**1762**
			1453-125
6523	GenMicro	GMS6523	2030-36
			2030-38
6524	GenMicro	GMS6524	2030-71
6525	GenMicro	GMS6525	2007-21
65256	Hitachi	HM65256A-12	3846-52
		HM65256A-15	3846-58
		HM65256A-20	3846-66
	Motorola	**MCM65256-30**	★**4121**
			3853-15
		MCM65256-35	★**4121**
			3853-23
6526	GenMicro	GMS6526	2007-27
65262	**Harris**	**HM65262B**	★ **682**
			★**1631**
			★**4025**
			★**4029**
			★**4654**
			3844-45
		HS65262RH	★ **651**
			3844-93
6527	GenMicro	GMS6527	2007-10
6529	GenMicro	GMS6529	2030-41
	NEC	µPD6529	3319-114
6530	Rockwell	R6530	1453-134
6531	Rockwell	R6531	1453-140
			¶ 381-9
6532	Rockwell	R6532	1453-136
	UMC	UM6532	1453-137
		UM6532A	1453-138
654	**AD**	**AD654**	★**3133**
			3405-64
			¶ 391-12
6540	**Sprague**	**UCN-6540**	★**3269**
		UDN-6540B	2898-155
6541	Rockwell	R6541Q	1463-63
			1468-62
6545	Rockwell	R6545	¶ 373-9
		R6545-1	1453-110
6549	Rockwell	R6549	3381-92
			1465-67
655	Unitrode	PIC655	3397-26
6550	Panasonic	AN6550	3367-15
65500	DDC	BUS-65500	2900-96
65505	DDC	BUS-65505	2900-95
65508	DDC	BUS-65508	2900-94
6551	GouldAMI	S6551	2900-3
		S6551A	2900-4
	Harris	**HM6551-5**	★**4024**
			3833-89
		HM6551-8	★**4024**
			3833-74
		HM6551-9	★**4024**
			3833-75
		HM6551B-8	★**4024**
			3833-62
		HM6551B-9	★**4024**
			3833-63
		HS6551RH	★ **649**
			3833-64
	Panasonic	AN6551	3367-16
	Rockwell	R6551	1453-103
			¶ 372-4
			¶ 373-9
			¶ 379-6
	UMC	UM6551	1453-105
		UM6551A	1453-106
	VTI	**VL6551**	★**1751**
			★**1752**
			★**1764**
			1453-107
65516	**Motorola**	**MCM65516**	★**4121**
			¶ 374-6
	RCA	**CDP65516-43**	★**1673**
			★**1677**
			3849-55
		CDP65516-55	★**1673**
			★**1677**
			3849-64
6552	Panasonic	AN6552	3367-17
6554	Panasonic	AN6554	3371-42
6555	Panasonic	AN6555	3367-1

Base Number	Source	Device	Page-Line
6556	Panasonic	AN6556	3366-51
65560	Rockwell	R65560	1468-1
6557	Panasonic	AN6557	3363-40
6558	Panasonic	AN6558	3363-41
656	SGS	LS656	3381-44
	Telefunken	U656BS	891-50
	Unitrode	PIC656	3397-27
65600	DDC	BUS-65600	2901-3
6561	**Harris**	**HM6561-5**	★**4024**
			3833-88
		HM6561-8	★**4024**
			3833-72
		HM6561-9	★**4024**
			3833-73
		HM6561B-8	★**4024**
			3833-59
		HM6561B-9	★**4024**
			3833-60
	Panasonic	AN6561	3367-51
6562	Panasonic	AN6562	3367-50
6564	**Harris**	**HM5-6564**	★**4027**
			3843-98
			3845-103
		HM6564-2	3843-99
			3845-101
		HM6564-5	3843-101
			3845-104
		HM6564-9	3843-100
			3845-102
		HS6564RH	★ **644**
			3843-97
	Panasonic	AN6564	3335-5
657	Unitrode	PIC657	3397-28
6570	Panasonic	AN6570	3350-30
6571	Panasonic	AN6571	3363-80
6572	Panasonic	AN6572	3363-79
6573	Panasonic	AN6573	3350-31
6592	Rockwell	R6592	1453-111
6593	Panasonic	AN6593	3355-14
65C00	Hyundai	HY65C00/1	1419-35
		HY65C00/11	1421-1
	NCR	**NCR65C00/1**	★**1671**
			1453-48
			1427-7
		NCR65C00/2	★**1671**
			1453-49
		NCR65C00/3	★**1671**
			1453-50
	Rockwell	R65C00	¶ 378-9
		R65C00/21	1453-113
65C01	WDC	W65C01	1453-72
65C02	Golden	GE65C02	2015-12
	Hyundai	HY65C02	1421-2
	NCR	**NCR65C02**	★**1671**
			1453-51
			1427-8
	Panatech	**RP65C02**	★**4133**
			1453-54
		RP65C02A	★**4133**
			1453-55
	Rockwell	R65C02	1429-15
			¶ 375-10
	VTI	**VL65C02**	★**1751**
			★**1752**
			★**1753**
			1453-70
	WDC	W65C02	1453-73
65C101	WDC	W65C101	1453-29
65C102	Rockwell	R65C102	1429-16
65C112	Rockwell	R65C112	1429-17
65C21	**NCR**	**NCR65C21**	★**1671**
			1453-120
	VTI	VL65C21	1453-126
	WDC	W65C21	1453-128
65C22	**NCR**	**NCR65C22**	★**1671**
			1453-121
	Rockwell	R65C22	1453-124
	VTI	**VL65C22**	★**1751**
			★**1752**
			★**1762**
			1453-127
	WDC	W65C22	1453-129
65C24	Rockwell	R65C24	1453-132
	VTI	VL65C24	1453-133
65C29	Rockwell	R65C29	1453-114
	WDC	W65C29	1453-130

Base Number	Source	Device	Page-Line
65C32	WDC	W65C32	1453-139
65C51	**GouldAMI**	**S65C51**	★**1613**
			1465-25
	RCA	**CDP65C51-1**	★**1673**
			★**1679**
			2901-88
			★**1673**
			★**1679**
			1452-73
		CDP65C51-2	★**1673**
			★**1679**
			2901-89
	Rockwell	R65C51	1453-104
	VTI	**VL65C51**	★**1751**
			★**1752**
			★**1764**
			1453-108
	WDC	W65C51	1453-109
65C802	WDC	W65C802	1463-107
			1437-20
65C816	Hyundai	HY65C816	1433-21
	WDC	W65C816	1463-108
			1437-21
65C90	WDC	W65C90	1453-131
65CX02	**NCR**	**NCR65CX02**	★**1671**
			★**4722**
			★**4727**
			1453-52
65F11	Rockwell	R65F11	¶ 385-5
65F12	Rockwell	R65F12	¶ 385-5
65FR1	Rockwell	F65FR1	¶ 385-5
65KS4	**VTI**	**VT65KS4**	★**4265**
			★**4270**
			3844-112
65NC02	**VTI**	**VL65NC02**	★**1751**
			★**1752**
			★**1753**
			1453-71
			★**1751**
			★**1752**
			★**1753**
			1433-1
65SC00	GTEMicro	G65SC00	¶ 369-4
65SC02	**GTEMicro**	**G65SC02**	★**1615**
			1453-30
			1419-3
	WDC	W65SC02	1453-74
65SC03	**GTEMicro**	**G65SC03**	★**1615**
			1453-31
			1419-4
	WDC	W65SC03	1453-75
65SC04	**GTEMicro**	**G65SC04**	★**1615**
			1453-32
			1419-5
	WDC	W65SC04	1453-76
65SC05	**GTEMicro**	**G65SC05**	★**1615**
			1453-33
			1419-6
	WDC	W65SC05	1453-77
65SC06	**GTEMicro**	**G65SC06**	★**1615**
			1453-34
			1419-7
	WDC	W65SC06	1453-78
65SC07	**GTEMicro**	**G65SC07**	★**1615**
			1453-35
			1419-8
	WDC	W65SC07	1453-79
65SC102			
	GTEMicro	**G65SC102**	★**1615**
			1453-36
			1419-9
	WDC	W65SC102	1453-80
65SC103			
	GTEMicro	**G65SC103**	★**1615**
			1453-37
			1419-10
	WDC	W65SC103	1453-81
65SC104			
	GTEMicro	**G65SC104**	★**1615**
			1453-38
			1419-11
	WDC	W65SC104	1453-82
65SC105			
	GTEMicro	**G65SC105**	★**1615**
			1453-39
			(Continued)

Base Number	Source	Device	Page-Line
65SC105			
	GTEMicro	G65SC105	1419-12
	WDC	W65SC105	1453-83
65SC106			
	GTEMicro	**G65SC106**	★**1615**
			1453-40
			1419-13
	WDC	W65SC106	1453-84
65SC107			
	GTEMicro	**G65SC107**	★**1615**
			1453-41
			1419-14
	WDC	W65SC107	1453-85
65SC112			
	GTEMicro	**G65SC112**	★**1615**
			1453-42
			1419-15
	WDC	W65SC112	1453-86
65SC115			
	GTEMicro	**G65SC115**	★**1615**
			1453-43
			1419-16
	WDC	W65SC115	1453-87
65SC12	**GTEMicro**	**G65SC12**	★**1615**
			1453-44
			1419-17
	WDC	W65SC12	1453-88
65SC13	**GTEMicro**	**G65SC13**	★**1615**
			1453-45
			1419-18
	WDC	W65SC13	1453-89
65SC14	**GTEMicro**	**G65SC14**	★**1615**
			1453-46
			1419-19
	WDC	W65SC14	1453-90
65SC15	**GTEMicro**	**G65SC15**	★**1615**
			1453-47
			1419-20
	WDC	W65SC15	1453-91
65SC150			
	GTEMicro	**G65SC150**	★**1616**
			1453-92
			¶ 385-14
			1419-21
65SC151			
	GTEMicro	G65SC151	1453-93
65SC21	GTEMicro	G65SC21	1453-117
65SC22	GTEMicro	G65SC22	1453-118
	Mitel	MD65SC22	1453-119
65SC32	GTEMicro	G65SC32	1453-135
65SC51	GTEMicro	G65SC51	1453-101
	Mitel	MD65SC51	1453-102
65SC802			
	GTEMicro	**G65SC802**	★**1617**
			1463-1
			1433-19
	WDC	W65SC802	1463-3
65SC816			
	GTEMicro	G65SC816	1463-2
			1433-20
	WDC	W65SC816	1463-4
65SC902			
	WDC	W65SC902	1463-5
65X61	Intel	IM65X61-1	3833-61
66	MCE	MCE66	3354-51
660	Motorola	MC660	852-54
	Signetics	**NE660**	★**3727**
			3316-176
	Unitrode	PIC660	3397-29
6600	**Fujitsu**	**C6600AV**	★**4624**
			4445-9
		C6600VH	★**4624**
			4445-10
	MMI	HD6600	887-142
	National	HD6600	2876-57
			2893-5
	Plessey	SL6600	¶ 415-9
6605	MMI	HD6605	887-143
661	Motorola	MC661	852-55
	Unitrode	PIC661	3397-30
66106	DDC	BUS-66106	2901-1
66111	DDC	BUS-66111	2901-2
6616	Harris	HM6616	¶ 436-7
			¶ 436-8
		HM6616-9	★**4028**
			3819-71
			(Continued)

Arranged alphanumerically from left to right.

Base Number	Source	Device	Page-Line
		HM6616B-2	★**4028**
			3819-68
		HM6616B-9	★**4028**
			3819-69
662	Motorola	MC662	852-37
	Unitrode	PIC662	3397-31
6620	IMI	IMI6620	4449-37
	S-MOS	**SLA6620**	★**4752**
			4456-12
66202	Hitachi	HM66202-15	3846-14
			3846-25
			3846-63
			3846-78
		HM66202-20	3846-19
			3846-72
		HM66202L-15	3846-15
			3846-26
			3846-64
			3846-79
		HM66202L-20	3846-20
			3846-73
663	Maxim	MAX663	3392-97
	Motorola	MC663	852-49
66300	DDC	BUS-66300	2901-7
6634	Motorola	MCM6634	¶ 441-3
664	Maxim	MAX664	3394-50
	Motorola	MC664	852-50
	Telefunken	U664B	891-21
		U664BS	891-22
6640	Harris	HD6640	¶ 354-14
	Plessey	SL6640	3322-55
			¶ 415-9
6641	Harris	HM6641	¶ 436-9
		HM6641-8	★**4028**
			3816-68
		HM6641-9	★**4028**
			3816-69
		HS6641RH	★ **653**
			3816-70
665	Motorola	MC665	853-1
	Telefunken	U665B	891-58
6650	Plessey	SL6650	¶ 415-9
6653	Intersil	IM6653-1	3817-44
		IM6653M	3817-45
6654	Intersil	IM6654	3816-73
		IM6654-1	3816-72
		IM6654A	3816-71
		IM6654M	3816-74
6658	Intel	IM6658	3817-158
		IM6658M	3817-159
666	Maxim	MAX666	3392-98
	Motorola	MC666	853-2
	Telefunken	U666B	891-45
		U666BS	891-46
		U666BST	891-47
6663	Plessey	PSM-6663	2036-30
6664	Motorola	MCM6664	¶ 440-7
			¶ 440-8
		MCM6664/65	¶ 441-3
		MCM6664A	¶ 439-2
6665	**Motorola**	**MCM6665B-15**	★**4118**
			3827-60
		MCM6665B-20	★**4118**
			3827-81
667	AD	AD667	¶ 389-15
		AD667J	★**3105**
			★**3112**
			2861-30
		AD667K	★**3105**
			★**3112**
			2859-78
		AD667S	★**3105**
			★**3112**
			2861-31
	Motorola	MC667	852-96
6670	**Motorola**	**MCM6670**	★**4121**
66700	**Motorola**	**MCM66700**	★**4121**
66710	**Motorola**	**MCM66710**	★**4121**
66714	**Motorola**	**MCM66714**	★**4121**
66720	**Motorola**	**MCM66720**	★**4121**
66730	**Motorola**	**MCM66730**	★**4121**
66734	**Motorola**	**MCM66734**	★**4121**
6674	**Motorola**	**MCM6674**	★**4121**
66740	**Motorola**	**MCM66740**	★**4121**
66750	**Motorola**	**MCM66750**	★**4121**
66751	**Motorola**	**MCM66751**	★**4121**
66760	**Motorola**	**MCM66760**	★**4121**
66770	**Motorola**	**MCM66770**	★**4121**
66780	**Motorola**	**MCM66780**	★**4121**
66790	**Motorola**	**MCM66790**	★**4121**
668	Motorola	MC668	852-61
6684	**Toshiba**	**T6684**	★**1750**
6685	AMD	AM6685C	3312-9
		AM6685M	3312-10
6687	AMD	AM6687C	3313-32
		AM6687M	3313-33
669	Motorola	MC669	852-88
6690	Plessey	SL6690	3322-56
			¶ 415-9
6691	Plessey	SL6691	3322-57
67	Lomas	RAM67	2038-36
670	**AD**	**AD670A**	★**3120**
			★**3124**
			2836-12
		AD670B	★**3120**
			★**3124**
			2836-20
		AD670J	★**3120**
			★**3124**
			2836-13
		AD670K	★**3120**
			★**3124**
			2836-21
		AD670S	★**3120**
			★**3124**
			2836-14
	Motorola	MC670	852-59
	Signetics	**NE670**	★**3727**
			3316-177
	Unitrode	PIC670	3397-32
671	Motorola	MC671	852-60
	Siemens	TCA671	3309-28
	Unitrode	PIC671	3397-33
6710	Telefunken	SAS6710	3328-26
672	Motorola	MC672	852-62
	Unitrode	PIC672	3397-34
6721	**Toshiba**	**T6721**	★**1750**
67256	Motorola	MCM67256	3824-37
		MCM67256-15	3824-4
		MCM67256-2	3823-110
		MCM67256-20	3824-15
		MCM67256-25	3824-38
67259	Motorola	MCM67259-15	3824-2
		MCM67259-20	3824-12
		MCM67259-25	3824-33
673	**AD**	**AD673J**	★**3124**
			2834-45
		AD673S	★**3124**
			2834-46
	Motorola	MC673	852-79
			¶ 420-16
674	**Burr-Brown**	**ADC674AJ**	★**3146**
			2844-26
		ADC674AK	★**3146**
			2843-47
		ADC674AS	★**3146**
			2844-27
		ADC674AT	★**3146**
			2843-48
	Harris	**HI674AJ**	★**3185**
			2844-28
		HI674AK	★**3185**
			2845-18
		HI674AL	★**3185**
			2845-19
		HI674AS	★**3185**
			2844-29
		HI674AS-8	★**3185**
			2844-30
		HI674AT	★**3185**
			2845-20
		HI674AT-8	★**3185**
			2845-21
		HI674AU	★**3185**
			2845-22
		HI674AU-8	★**3185**
			2845-23
	Motorola	MC674	852-80
67401	MMI	67401	3809-64
		67401A	3809-76
		67401B	3809-80
		C67401	★**1101**
			(Continued)
67401	**MMI**	**C67401**	★**1115**
			3809-66
		C67401A	★**1101**
			★**1115**
			3809-77
		C67401B	★**1101**
			★**1115**
			3809-81
67402	MMI	67402	3809-97
		67402A	3809-105
		67402B	3809-109
		C67402	★**1101**
			★**1115**
			3809-99
		C67402A	★**1101**
			★**1115**
			3809-106
		C67402B	★**1101**
			★**1115**
			3809-110
6741	**RCA**	**CA6741**	★**3674**
			3353-50
67411	**MMI**	**67411A**	★**1101**
			3809-86
67412	**MMI**	**67412A**	★**1101**
			3809-118
67413	**MMI**	**67413A**	★**1101**
			★**1116**
			3809-117
67417	**MMI**	**67417**	★**1117**
			3809-119
		C67417	★**1101**
674219	**MMI**	**674219**	★**1118**
			3809-121
		C674219	★**1101**
675	ArrayTech	DHS675	4439-20
	HybridSys	R675B-1	3403-3
		R675B-3	3403-76
		R675B-4	3403-4
		R675B-5	3403-5
		R675C-1	3403-6
		R675C-3	3403-77
		R675C-5	3403-7
	Motorola	MC675	853-7
67560	Rockwell	R67560	1468-2
676	Motorola	MC676	852-28
			2877-64
6765	Rockwell	R6765	1467-56
	VTI	**VL6765**	★**1751**
			★**1752**
			★**1760**
			1467-59
677	Motorola	MC677	852-12
6772	**Toshiba**	**T6772**	★**1750**
678	Motorola	MC678	852-9
6787	**Hitachi**	**HM6787**	★**4035**
			3846-90
6788	Hitachi	HM6788	3837-47
67C401	**SiliconSys**	**SSI67C401**	★**3736**
			3809-69
67C402	**SiliconSys**	**SSI67C402**	★**3736**
			3809-102
67C65	VTI	VL67C65	1467-60
67L401	**MMI**	**67L401**	★**1101**
			3809-50
		C67L401	★**1101**
			3809-82
67L402	**MMI**	**67L402**	★**1101**
			3809-91
		C67L402	★**1101**
			3809-111
67L403	**MMI**	**C67L403**	★**1101**
			3809-112
68	ApplSys	ACS/68	2017-34
	Datricon	ACS-68sBC	2017-38
	Fairchild	PEP-68	1813-14
	Heurikon	HK-68A	2023-38
		HK68/M10	2023-32
		HK68/ME	2023-33
		HK68/V10	2027-17
		HK68/VE	2027-18
	IntSolutions	IS-68K	2023-25
		IS-68XM-XXX	2033-22
	Microbar	DBC68K	2027-31
	Motorola	M68RWIN	2031-33
		MEX68KDM	2023-22
			(Continued)
68	**Motorola**	**RMS68**	★**2108**
	National	VMC68K/15	2027-9
	Omnibyte	OB68K/MMU	2029-20
		OB68K/MSBC1	2029-25
		OB68K/SYS	1819-11
			8K19Y12+
		OB68K/SYSII	1819-13
		OB68K/VME1	2029-33
	Pacific	PM68D	2027-35
		PM68K	2027-33
		PV68F	2029-13
		V68S	2029-14
	PlesseyMicro	PME-68-2D	2029-3
		PME68-1B	2029-8
		PME68-2/100	2029-9
		PME68-2/102	2029-15
		PME68/3	2029-10
	RCIData	CMC68/04A	2013-27
		CMC68/15	2013-23
		CMC68/15B	2013-26
		CMC68/15C	2013-24
		CMC68/15G	2013-25
	Synergy	SM68F	2027-36
		SM68M	2027-37
	Wintek	**MCH68**	★**2118**
			2005-35
680	AWI	SSC680	1464-64
	Motorola	MC680	852-4
	RTC	MS680	3320-124
6800	GouldAMI	S6800	1454-57
			1417-24
	Motorola	M6800	¶ 365-14
		MC6800	★**1660**
			1454-62
			¶ 364-17
			¶ 371-8
			¶ 374-17
			¶ 377-9
			¶ 377-16
			¶ 382-7
			1423-13
	National	MC6800	¶ 439-14
	ThomsonCSF	EF6800	1454-65
			¶ 370-14
			1431-17
68000	Hitachi	HD68000	1463-110
		HD68000-10	1463-111
			1437-33
		HD68000-12	1463-112
			1437-34
		HD68000-4	1463-113
		HD68000-6	1463-114
			1437-35
		HD68000-8	1463-115
			1437-36
		HD68000R-4	1435-17
	Mostek	**MK68000**	★**1647**
			1437-39
		MK68000-10	★**1647**
			1463-116
		MK68000-4	★**1647**
			1463-117
		MK68000-6	★**1647**
			1463-118
		MK68000-8	★**1647**
			1463-119
		MKB68000	1463-120
			1437-42
	Motorola	M68000 (EXORmacs)	1819-3
		MC68000	¶ 365-14
			¶ 370-13
			¶ 370-15
			¶ 372-3
			¶ 372-16
			¶ 382-6
			¶ 440-8
		MC68000-10	★**1654**
			★**1905**
			★**2109**
			1463-121
		MC68000-12	★**1654**
			★**1905**
			★**2109**
			1463-122
		MC68000-8	★**1654**
			(Continued)

¶ Indicates page number in Application Note Directory.
★ Indicates additional data is provided on the page noted.

Base Number	Source	Device	Page-Line
68000	**Motorola**	**MC68000-8**	★ **1905**
			★ **2109**
			1463-123
		PC68000	★ **1904**
	Rockwell	R68000	1463-124
	Signetics	**SCN68000**	★ **1720**
			1463-125
			1437-12
	TI	MC68000	¶ 372-15
	ThomsonCSF	EF68000	1463-126
		EF68000-10	1463-127
		EF68000-12	1463-128
		EF68000-16	1464-43
		EF68000-8	1463-129
	Zilog	68000	¶ 370-6
68000L10			
	Motorola	**MC68000L10**	★ **1654**
			1439-1
68000L12			
	Motorola	**MC68000L12**	★ **1654**
			1439-2
68000L20			
	Motorola	**MC68000L20**	★ **1654**
68000L8			
	Motorola	MC68000L8	1439-3
68008	**Mostek**	**MK68008**	★ **1648**
			1437-40
	Motorola	**MC68008**	★ **1654**
			1463-130
			1423-14
	Signetics	SCN68008	1463-131
	ThomsonCSF	EF68008	1463-132
		EF68008-10	1431-18
		EF68008-8	1431-19
68009	Motorola	MC68009	¶ 376-13
6801	**Goldstar**	**GL6801**	★ **3580**
			3382-59
	GouldAMI	S6801	1453-142
			1417-25
	HiLevel	6801VICE	1813-18
	Motorola	**MC6801**	★ **1664**
			★ **1905**
			1453-144
			¶ 363-13
			¶ 367-3
			¶ 370-12
			★ **1664**
			★ **1905**
			1423-15
		MC6801-1	★ **1664**
			★ **1905**
			1453-145
			★ **1664**
			★ **1905**
			1423-16
		MC6801C	★ **1664**
			★ **1905**
			1453-146
	MRCSys	MBK6801	2007-18
	ThomsonCSF	EF6801	1453-152
	Zilog	MC6801	¶ 368-5
68010	Cambridge	UNIVAX68010	2027-38
	Mostek	MK68010	1437-41
	Motorola	**MC68010**	★ **1654**
			★ **1905**
			★ **2109**
			1463-133
			★ **1654**
			★ **1905**
			★ **2109**
			1439-4
	Signetics	**SCN68010**	★ **1721**
			1463-134
68012	**Motorola**	**MC68012**	★ **1654**
6801U4	**Motorola**	**MC6801U4**	★ **1666**
			1453-147
			1423-17
		MC6801U4-1	★ **1666**
			1453-148
			1423-18
6802	GouldAMI	S6802	1454-96
			¶ 369-12
			¶ 376-17
			1417-26
	Motorola	**MC6802**	★ **1660**
			1454-100
			(Continued)
6802	Motorola	MC6802	1423-19
		MC6802NS	★ **1660**
			1454-101
	ThomsonCSF	EF6802	1454-104
68020	**Motorola**	**MC68020**	★ **1654**
			★ **1905**
			★ **2109**
			★ **2110**
			1465-8
			¶ 366-6
			¶ 369-10
			★ **1654**
			★ **1905**
			★ **2109**
			★ **2110**
			1439-11
6803	GouldAMI	S6803	1454-37
			1417-27
		S6803N/R	1454-38
	Motorola	**MC6803**	★ **1666**
			1454-39
			¶ 370-12
			1423-20
		MC6803-1	★ **1666**
			1454-40
		MC6803C	★ **1666**
			1454-41
		MC6803E	★ **1666**
			1454-42
			1423-21
	ThomsonCSF	EF6803	1454-45
	Toshiba	**T6803**	★ **1750**
6803U4	**Motorola**	**MC6803U4**	★ **1666**
			1453-157
			1423-22
		MC6803U4-1	★ **1666**
			1453-149
			1423-23
	ThomsonCSF	EF6803U4	1455-37
6804	**Motorola**	**MC6804**	★ **1664**
			★ **1669**
68045	GouldAMI	S68045	1454-151
			¶ 369-13
68047	GouldAMI	S68047	¶ 363-6
6804J1	Motorola	MC6804J1	1454-3
			1423-24
6804J2	Motorola	MC6804J2	1454-4
			1423-25
	ThomsonCSF	EF6804J2	1454-6
			1431-20
6804P2	Motorola	MC6804P2	1454-5
			1423-26
	ThomsonCSF	EF6804P2	1454-7
			1431-21
6805	GouldAMI	S6805	1453-143
			1417-28
	Motorola	M6805	¶ 363-9
			¶ 365-17
			¶ 369-15
			¶ 370-2
		MC6805	★ **1664**
			★ **1667**
			★ **1905**
			¶ 363-17
			¶ 413-14
	Onset	CPU-6805A	2007-5
	RCA	**CDP6805**	★ **1678**
			¶ 368-12
6805E2	**RCA**	**CDP6805E2**	★ **1673**
			1454-21
			¶ 374-7
			1427-41
6805E3	**RCA**	**CDP6805E3**	★ **1673**
			1454-70
			1427-42
6805F2	**RCA**	**CDP6805F2**	★ **1673**
			1454-16
			¶ 363-2
			1429-1
6805G2	**RCA**	**CDP6805G2**	★ **1673**
			1454-17
			¶ 364-9
			1429-2
6805H2	Motorola	MC6805H2	1454-54
6805K2	Motorola	MC6805K2	1454-1
			1423-27
6805K3	Motorola	MC6805K3	1454-2
			1423-28
6805P2	Motorola	MC6805P2	1453-161
			1423-29
	ThomsonCSF	EF6805P2	1453-153
6805P4	Motorola	MC6805P4	1453-162
			1423-30
	ThomsonCSF	EF6805P4	1453-154
6805P6	Motorola	MC6805P6	1453-163
			1423-31
	ThomsonCSF	EF6805P6	1453-155
6805R2	Motorola	MC6805R2	1454-46
			¶ 370-3
			1423-32
		MC6805R2-1	¶ 364-7
	ThomsonCSF	EF6805R2	1454-66
6805R3	Motorola	MC6805R3	1454-49
			1423-33
	ThomsonCSF	EF6805R3	1431-22
6805S2	Motorola	MC6805S2	1453-165
			¶ 370-3
			1423-34
6805S3	Motorola	MC6805S3	1453-166
			1423-35
6805T2	Motorola	MC6805T2	1454-9
			¶ 363-15
			1423-36
	ThomsonCSF	EF6805T2	1454-10
6805U2	Motorola	MC6805U2	1453-164
			1425-1
	ThomsonCSF	EF6805U2	1453-156
6805U3	Motorola	MC6805U3	1454-47
			1425-2
	ThomsonCSF	EF6805U3	1454-48
6808	Hitachi	HD6808	1454-107
	Motorola	**MC6808**	★ **1660**
			1454-108
			1425-3
	ThomsonCSF	EF6808	1454-111
6809	Digitek	DK6809	2013-30
	GouldAMI	S6809	1454-84
			1417-29
		S6809(E)	1454-71
	Hitachi	HD6809	1454-87
			1419-30
		HD6809E	1419-31
	Motorola	**MC6809**	★ **1660**
			★ **1905**
			1454-90
			¶ 364-3
			¶ 370-1
			¶ 370-4
			¶ 370-11
			¶ 371-2
			¶ 371-8
			¶ 380-9
			★ **1660**
			★ **1905**
			1425-4
		MC6809E	★ **1660**
			★ **1905**
			1454-75
			¶ 363-8
			¶ 366-7
			¶ 370-1
			¶ 370-4
			¶ 380-15
			★ **1660**
			★ **1905**
			1425-5
	TI	6809E	¶ 372-11
	ThomsonCSF	EF6809	1454-93
		EF6809E	1454-78
681	Motorola	MC681	852-10
	RTC	MS681	3320-125
6810	Fairchild	F6810	3832-38
	IntSolutions	IS-6810	2023-26
		VME-6810	2029-16
	Motorola	**MCM6810**	★ **1662**
			★ **4119**
			3832-40
	ThomsonCSF	EF6810	3832-41
68120	**Motorola**	**MC68120**	★ **1656**
			★ **1663**
			1464-34
			¶ 366-7
			(Continued)
68120	Motorola	MC68120	¶ 380-15
			★ **1656**
			★ **1663**
			1425-6
68121	**Motorola**	**MC68121**	★ **1656**
			★ **1663**
			1464-35
			¶ 365-8
			★ **1656**
			★ **1663**
			1425-7
681488	Fairchild	F681488	1458-2
68153	Motorola	MC68153	1463-137
			1469-103
68154	**Signetics**	**SCB68154**	★ **1734**
			1468-80
68155	**Signetics**	**SCB68155**	★ **1736**
			1468-79
6816	Motorola	MEX6816-22S	2030-69
	Samsung	KM6816-15	3838-79
		KM6816-20	3839-2
68172	**Signetics**	**SCB68172**	★ **1748**
			1464-63
68175	**Signetics**	**SCB68175**	★ **1738**
			1468-78
6818	**RCA**	**CDP6818**	★ **1673**
			★ **1679**
			1454-148
68184	**Motorola**	**MC68184**	★ **1658**
			1463-135
			1458-31
68194	**Motorola**	**MC68194**	★ **1658**
			1463-140
			1458-32
682	Motorola	MC682	852-93
	RTC	MS682	3320-126
68200	**Mostek**	**MK68200**	★ **1650**
			1464-42
			1435-28
68201	**Mostek**	**MK68201**	★ **1650**
6821	GouldAMI	S6821	1455-42
			1469-124
	Hitachi	HD6821	1455-48
	Motorola	**MC6821**	★ **1663**
			1455-53
			1469-130
			¶ 380-3
	MRCSys	MBK6821	2030-63
	ThomsonCSF	EF6821	1470-1
			1469-134
68211	**Mostek**	**MK68211**	★ **1650**
6822	**Motorola**	**MC6822**	★ **1663**
			1455-29
6823	**RCA**	**CDP6823**	★ **1673**
			★ **1679**
			1455-41
68230	**Mostek**	**MK68230-10**	★ **1649**
			1464-48
		MK68230-8	★ **1649**
			1464-49
	Motorola	MC68230	¶ 372-8
			¶ 372-16
		MC68230-12	★ **1656**
			1464-50
	Signetics	SCN68230	1464-53
	ThomsonCSF	EF68230-10	1464-54
		EF68230-8	1464-55
68230L10			
	Motorola	**MC68230L10**	★ **1656**
			1464-51
68230L8			
	Motorola	**MC68230L8**	★ **1656**
			1464-52
6828	Motorola	MC6828	1470-11
			1469-147
6829	**Motorola**	**MC6829**	★ **1662**
			1455-33
			¶ 380-9
683	Motorola	MC683	852-87
	RTC	MS683	3320-127
6831	**Toshiba**	**T6831**	★ **1750**
68316	Fairchild	F68316	3849-53
683201	**Mostek**	**MK683201**	★ **1650**
68321	OKI	MSM68321	1469-107
68332	Fairchild	F68332	3850-23

Arranged alphanumerically from left to right.

PART NUMBER INDEX

Base Number	Source	Device	Page-Line
68345	Mostek	MK68345	1464-29
		MK68345-12	1464-30
		MK68345-15	1464-31
		MK68345-20	1464-32
6835	Motorola	MC6835	1454-157
	Panasonic	DN6835	891-70
68364	**Motorola**	**MCM68364**	★ **4120**
68365	**Motorola**	**MCM68365**	★ **4120**
68366	**Motorola**	**MCM68366**	★ **4120**
68367	**Motorola**	**MCM68367**	★ **4120**
68368	**Motorola**	**MCM68368**	★ **4120**
68369	**Motorola**	**MCM68369-20**	★ **4120**
			3850-75
		MCM68369-25	★ **4120**
			3850-125
		MCM68369-30	★ **4120**
			3851-41
		MCM68369-35	★ **4120**
			3851-60
6836E16			
	Motorola	**MCM6836E16**	★ **1662**
			★ **4122**
			3813-90
6836R16			
	Motorola	**MCM6836R16**	★ **1662**
			★ **4122**
			3813-91
6837	Panasonic	DN6837	891-71
68370	**Motorola**	**MCM68370-20**	★ **4120**
			3850-76
		MCM68370-25	★ **4120**
			3850-126
		MCM68370-30	★ **4120**
			3851-42
		MCM68370-35	★ **4120**
			3851-61
6838	Panasonic	DN6838	891-72
6839	**Motorola**	**MC6839**	★ **1662**
			1455-17
	Panasonic	DN6839	891-73
684	Motorola	MC684	852-20
6840	GouldAMI	S6840	1470-14
	Hitachi	HD6840	1470-19
	Motorola	**MC6840**	★ **1663**
			1470-22
		MC6840M	★ **1663**
			1470-23
	ThomsonCSF	EF6840	1470-26
6842	Motorola	MPQ6842	1454-143
6843	Hitachi	HD6843	1455-20
	Motorola	MC6843	1455-22
68430	**Signetics**	**SCB68430**	★ **1722**
			1464-19
6844	Hitachi	HD6844	1455-7
	Motorola	**MC6844**	★ **1662**
			1455-10
			¶ 365-8
			¶ 370-11
			¶ 371-2
		MC6844M	★ **1662**
			1455-11
68440	**Motorola**	**MC68440**	★ **1656**
			1464-21
			1469-39
	Signetics	SCN68440	1464-22
			1466-83
	ThomsonCSF	EF68440	1464-23
			1466-84
68442	Motorola	MC68442	1464-20
6845	GouldAMI	S6845E	1465-68
	Hitachi	HD6845	1454-154
	Motorola	**MC6845**	★ **1661**
			1465-69
	UMC	UM6845	1454-163
		UM6845A	1454-164
		UM6845B	1454-165
		UM6845E	1454-166
		UM6845EA	1454-167
		UM6845EB	1454-168
		UM6845R	1454-169
		UM6845RA	1454-170
		UM6845RB	1454-171
	VTI	**VL6845E**	★ **1751**
			★ **1752**
			★ **1759**
			1465-71
			(Continued)
6845	**VTI**	**VL6845R**	★ **1751**
			★ **1752**
			★ **1759**
			1465-72
68450	Hitachi	HD68450-10	1464-14
		HD68450-4	1464-15
		HD68450-6	1464-16
		HD68450-8	1464-17
	Motorola	**MC68450**	★ **1656**
			1464-18
68451	**Mostek**	**MK68451**	★ **1651**
			1464-39
	Motorola	**MC68451**	★ **1656**
			1464-40
			¶ 435-8
	Signetics	SCN68451	1464-41
68452	**Motorola**	**MC68452**	★ **1656**
			1463-136
			1465-32
68454	**Motorola**	**MC68454**	★ **1657**
			1464-10
	Signetics	**SCN68454**	★ **1724**
			1464-11
68459	**Signetics**	**SCB68459**	★ **1726**
			1464-12
6845R1	Motorola	MC6845R1	1454-158
6846	GouldAMI	S6846	1470-33
			¶ 376-17
	Motorola	**MC6846**	★ **1662**
			1470-34
	ThomsonCSF	EF6846	1470-39
68465	Rockwell	R68465	1464-33
			1466-117
6847	**Motorola**	**MC6847**	★ **1661**
			3327-121
			¶ 363-13
			¶ 364-3
			¶ 373-1
			1470-65
			1464-61
			1466-29
		MC6847Y	★ **1661**
			1464-62
68478	Motorola	MC68478	1470-66
6848	**RCA**	**CDP6848**	★ **1673**
			★ **1679**
			1470-13
		CDP6848C	★ **1673**
			★ **1679**
			1470-61
68483	ThomsonCSF	EF68483	1464-13
68486	**Motorola**	**MC68486**	★ **1661**
			1464-8
			1465-102
68487	**Motorola**	**MC68487**	★ **1661**
			1464-9
			1465-103
68488	GouldAMI	S68488	¶ 379-5
	Motorola	MC68488	¶ 370-11
685	AMD	AM685	¶ 414-7
		AM685L	3312-23
		AM685M	3312-24
	Motorola	MC685	852-16
6850	Fairchild	F6850	2900-2
	GouldAMI	S6850	2900-5
			1454-123
			1469-86
	Hitachi	HD6850	1454-129
	Motorola	**MC6850**	★ **1663**
			2900-6
			¶ 370-13
			¶ 395-9
			1454-131
			1469-92
	MRCSys	MBK6850	2030-56
	ThomsonCSF	EF6850	2900-7
			1454-138
			1469-98
6852	GouldAMI	S6852	1470-50
	Hitachi	HD6852	1470-53
	Motorola	**MC6852**	★ **1663**
			2901-38
			1470-55
			1469-156
	ThomsonCSF	EF6852	1470-58
			1469-157
6853	**RCA**	**CDP6853**	★ **1673**
			★ **1679**
			1452-74
6854	GouldAMI	S6854	1454-114
	Motorola	**MC6854**	★ **1663**
			1454-117
	ThomsonCSF	EF6854	1454-120
68540	Mostek	MK68540	1464-27
6855	Motorola	MC6855	1455-14
6856	Fairchild	F6856	2901-36
68561	Rockwell	R68561	1468-3
68562	**Motorola**	**MC68562**	★ **1657**
			1464-6
	Signetics	**SCN68562**	★ **1728**
			1464-7
68564	**Mostek**	**MK68564**	★ **1652**
			1464-58
	ThomsonCSF	EF68564	1464-59
6859	Motorola	MC6859	890-69
			1455-4
68590	**Mostek**	**MK68590**	★ **3611**
			1464-36
			1466-100
	Motorola	**MC68590**	★ **1657**
			1464-28
			1466-101
68591	Mostek	MK68591	1466-103
686	AMD	AM686	¶ 414-7
		AM686C	887-74
			3312-38
		AM686M	887-75
			3312-25
	Motorola	MC686	852-101
			3855-31
6860	Cermetek	MC6860	¶ 395-18
	Motorola	**MC6860**	★ **1663**
			★ **3633**
			3380-54
			¶ 395-19
			¶ 396-1
			★ **1663**
			★ **3633**
			1455-38
		MC6860L	★ **1663**
			★ **3633**
			1455-39
68601	Motorola	MC68601	1464-66
68605	Motorola	MC68605	1469-38
6862	Motorola	MC6862	3380-52
			1455-5
68652	**Motorola**	**MC68652**	★ **1657**
			2901-13
			¶ 376-13
			¶ 382-6
			1464-3
		MC68652-2	★ **1657**
			2901-14
	Signetics	**SCN68652**	★ **1686**
			2901-16
68653	**Motorola**	**MC68653**	★ **1657**
			2879-11
			¶ 382-6
			1464-57
	Signetics	**SCN68653**	★ **1688**
			2879-13
68661	**Motorola**	**MC68661**	★ **1657**
			1464-5
			¶ 376-13
			¶ 382-6
		MC68661A	★ **1657**
			2900-69
			1465-45
		MC68661B	★ **1657**
			2900-81
			1465-46
		MC68661C	★ **1657**
			2900-80
			1465-47
	Signetics	**SCN68661**	★ **1690**
			2900-82
		SCN68661B	★ **1690**
			1466-90
		SCN68661C	★ **1690**
			1466-91
68681	**Motorola**	**MC68681**	★ **1657**
			2900-61
			(Continued)
68681	Motorola	MC68681	¶ 370-9
			1464-67
	Signetics	**SCN68681**	★ **1730**
			2900-66
		SCN68681C	★ **1730**
			1464-68
687	AMD	AM687	¶ 414-7
		AM687AL	3314-1
		AM687AM	3313-41
		AM687L	3314-2
		AM687M	3313-42
6870	Motorola	MC6870	1454-149
68701	**Motorola**	**MC68701**	★ **1666**
			1454-23
			¶ 370-12
			¶ 374-16
			¶ 375-15
		MC68701-1	★ **1666**
			1454-24
			1425-8
		MC68701C	★ **1666**
			1454-25
		MC68701C-1	★ **1666**
			1454-26
68701U4			
	Motorola	**MC68701U4**	★ **1666**
			1454-27
			¶ 375-15
			1425-9
68701U5			
	Motorola	MC68701U5	1454-28
			1425-10
68704P2			
	Motorola	**MC68704P2**	★ **1669**
			1454-29
			1425-11
68705	**Motorola**	**MC68705**	★ **1668**
		MC68705Rs	¶ 374-18
68705P3			
	Motorola	MC68705P3	1454-30
			¶ 374-18
			1425-12
68705P5			
	Motorola	MC68705P5	1454-31
			1425-13
68705R3			
	Motorola	MC68705R3	1454-32
			1454-36
			1425-14
68705R5			
	Motorola	MC68705R5	1454-33
			1425-15
68705S3			
	Motorola	MC68705S3	1425-16
68705U3			
	Motorola	MC68705U3	1454-34
			¶ 363-17
			¶ 374-18
			1425-17
68705U5			
	Motorola	MC68705U5	1454-35
			1425-18
6871	Motorola	MC6871	1454-150
6875	Motorola	MC6875	1454-144
			¶ 377-9
			¶ 380-1
		MC6875A	1454-145
68764	**Motorola**	**MCM68764**	★ **4122**
			3822-62
		MCM68764-35	★ **4122**
			3822-53
68766	**Motorola**	**MCM68766**	★ **4122**
			3822-63
		MCM68766-30	★ **4122**
			3822-36
		MCM68766-30-10	
			★ **4122**
			3822-37
		MCM68766-35	★ **4122**
			3822-54
		MCM68766-35-10	
			★ **4122**
			3822-55
		MCM68766-40	★ **4122**
			3822-57
			(Continued)

¶ Indicates page number in Application Note Directory.
★ Indicates additional data is provided on the page noted.

Base Number	Source	Device	Page-Line
68766	**Motorola**	**MCM68766-40-10**	**★4122**
			3822-58
68768	**Motorola**	**MCM68768-30**	**★4120**
			3851-28
		MCM68768-35	**★4120**
			3851-56
68769	**Motorola**	**MCM68769-30**	**★4121**
			3822-49
		MCM68769-35	**★4121**
			3822-56
688	AllenSys	FX-688	2029-1
	Motorola	MC688	852-44
			¶ 420-16
6880	**Motorola**	**MC6880**	**★3210**
			2888-53
		MC6880A	**★3210**
			1454-141
68802	Rockwell	R68802	1458-20
6881	Motorola	MC6881	887-134
			1470-67
6882	Motorola	MC6882A	1470-75
		MC6882B	1470-76
68824	**Motorola**	**MC68824**	**★1658**
			1464-60
			1458-33
6883	Motorola	MC6883	877-92
			1470-47
6885	**Motorola**	**MC6885**	**★3209**
			1470-69
68851	Motorola	MC68851	2892-104
			1465-11
6886	**Motorola**	**MC6886**	**★3209**
			1470-70
6887	**Motorola**	**MC6887**	**★3209**
			1470-71
6888	**Motorola**	**MC6888**	**★3209**
			1470-72
68881	**Motorola**	**MC68881**	**★1654**
			1465-10
6889	**Motorola**	**MC6889**	**★3210**
			888-69
			2889-2
			1454-142
689	Motorola	MC689	852-11
6890	**Motorola**	**MC6890**	**★3630**
			2852-41
			¶ 371-18
			1455-2
		MC6890A	**★3630**
			2852-16
			1455-3
68901	**Mostek**	**MK68901**	**★1653**
			1464-44
	Motorola	**MC68901**	**★1656**
			1464-45
			¶ 381-13
	ThomsonCSF	EF68901	1464-46
68905	**Signetics**	**SCC68905**	**★1732**
			1464-37
68906	**Signetics**	**SCC68906**	**★1740**
			1464-38
68A00	GouldAMI	S68A00	1454-58
	Hitachi	HD68A00	1454-60
	Motorola	MC68A00	1454-63
	ThomsonCSF	EF68A00	1454-67
68A01	Motorola	MC68A01	1453-150
			1425-19
68A02	GouldAMI	S68A02	1454-97
			1417-30
	Motorola	MC68A02	1454-102
	ThomsonCSF	EF68A02	1454-105
68A03	Motorola	MC68A03	1454-43
			1425-20
	ThomsonCSF	EF68A03	1453-158
68A045	GouldAMI	S68A045	1454-152
68A08	Motorola	MC68A08	1454-109
	ThomsonCSF	EF68A08	1454-112
68A09	GouldAMI	S68A09	1454-85
			1417-31
		S68A09(E)	1454-72
	Hitachi	HD68A09	1454-88
	Motorola	MC68A09	1454-91
		MC68A09E	1454-76
	ThomsonCSF	EF68A09	1454-94
		EF68A09E	1454-79
68A10	Fairchild	F68A10	3832-33
	Motorola	**MCM68A10**	**★4119**
			3832-35
	ThomsonCSF	EF68A10	3832-36
68A21	GouldAMI	S68A21	1455-43
			1469-125
	Hitachi	HD68A21	1455-49
	Motorola	MC68A21	1455-54
			1469-131
	ThomsonCSF	EF68A21	1470-2
			1469-135
68A29	Motorola	C68A29	1455-32
68A316	**Motorola**	**MCM68A316**	**★4120**
68A332	Fairchild	F68A332	3849-120
	Motorola	**MCM68A332**	**★4120**
68A35	Motorola	MC68A35	1454-159
68A364	GouldAMI	S68A364	3851-59
68A39	Motorola	MC68A39	1455-18
68A40	GouldAMI	S68A40	1470-15
	Hitachi	HD68A40	1470-20
	Motorola	MC68A40	1470-24
	ThomsonCSF	EF68A40	1470-27
68A43	Hitachi	HD68A43	1455-21
68A44	Hitachi	HD68A44	1455-8
	Motorola	MC68A44	1455-12
68A45	Hitachi	HD68A45	1454-155
	Motorola	MC68A45	1454-160
68A46	Motorola	MC68A46	1470-35
68A488	Motorola	MC68A488	1455-25
68A50	GouldAMI	S68A50	1454-124
			1469-87
	Hitachi	HD68A50	1454-130
	Motorola	MC68A50	1454-132
			1469-93
	ThomsonCSF	EF68A50	1454-136
			1469-96
68A52	GouldAMI	S68A52	1470-51
	Hitachi	HD68A52	1470-54
	Motorola	MC68A52	1470-56
	ThomsonCSF	EF68A52	1470-59
68A54	GouldAMI	S68A54	1454-115
	Motorola	MC68A54	1454-118
	ThomsonCSF	EF68A54	1454-121
68B00	GouldAMI	S68B00	1454-59
	Hitachi	HD68B00	1454-61
	Motorola	MC68B00	1454-64
	ThomsonCSF	EF68B00	1454-68
68B01	Motorola	MC68B01	1453-151
			1425-21
68B02	GouldAMI	S68B02	1454-98
	Motorola	MC68B02	1454-103
	ThomsonCSF	EF68B02	1454-106
68B03	Motorola	MC68B03	1454-44
			1425-22
	ThomsonCSF	EF68B03	1453-159
68B045	GouldAMI	S68B045	1454-153
68B08	Motorola	MC68B08	1454-110
	ThomsonCSF	EF68B08	1454-113
68B09	GouldAMI	S68B09	1454-86
			1419-1
		S68B09(E)	1454-73
	Hitachi	HD68B09	1454-89
	Motorola	MC68B09	1454-92
			¶ 383-1
		MC68B09E	1454-77
			¶ 370-8
			¶ 383-1
	National	MC68B09	¶ 371-9
	ThomsonCSF	EF68B09	1454-95
		EF68B09E	1454-80
68B10	Fairchild	F68B10	3832-29
	Motorola	**MCM68B10**	**★4119**
			3832-30
			¶ 370-15
	ThomsonCSF	EF68B10	3832-32
68B21	GouldAMI	S68B21	1455-44
			1469-126
	Hitachi	HD68B21	1455-50
	Motorola	MC68B21	1455-55
			1469-132
	ThomsonCSF	EF68B21	1470-3
			1469-136
68B29	Motorola	MC68B29	1455-34
68B308	Fairchild	F68B308	3849-19
68B35	Motorola	MC68B35	1454-161
68B364	GouldAMI	S68B364	3850-105
68B39	Motorola	MC68B39	1455-19
68B40	GouldAMI	S68B40	1470-16
	Hitachi	HD68B40	1470-21
	Motorola	MC68B40	1470-25
	ThomsonCSF	EF68B40	1470-28
68B44	Hitachi	HD68B44	1455-9
	Motorola	MC68B44	1455-13
68B45	Hitachi	HD68B45	1454-156
	Motorola	MC68B45	1454-162
68B46	Motorola	MC68B46	1470-36
68B488	Motorola	MC68B488	1455-26
68B50	GouldAMI	S68B50	1454-125
			1469-88
	Motorola	MC68B50	1454-133
			1469-94
	ThomsonCSF	EF68B50	1454-137
			1469-97
68B52	GouldAMI	S68B52	1470-52
	Motorola	MC68B52	1470-57
	ThomsonCSF	EF68B52	1470-60
68B54	GouldAMI	S68B54	1454-116
	Motorola	MC68B54	1454-119
	ThomsonCSF	EF68B54	1454-122
68C45	**VTI**	**VL68C45R**	**★1751**
			★1752
			★1759
			1465-73
		VL68C45S	**★1751**
			★1752
			★1759
			1465-74
68C552	Rockwell	R68C552	1464-1
68C681	EXEL	XL68C681	2900-58
			1463-88
			1464-65
68E211	**Mostek**	**MK68E211**	**★1650**
68H68	RCA	CDP68H68	2838-5
68HC01	Motorola	MC68HC01	1455-35
			1425-23
68HC03	Motorola	MC68HC03	1455-36
			1425-24
68HC04	**Motorola**	**MC68HC04**	**★1669**
68HC04P2	Motorola	MC68HC04P2	1454-14
			1425-25
	RCA	**CDP68HC04P2**	**★1673**
68HC04P3	Motorola	MC68HC04P3	1454-15
			1425-26
	RCA	**CDP68HC04P3**	**★1673**
	ThomsonCSF	EF68HC04P3	1454-8
			1431-23
68HC05	**Motorola**	**MC68HC05**	**★4721**
68HC05C4	**Motorola**	**MC68HC05C4**	**★1668**
			1454-50
			1425-27
	RCA	**CDP68HC05C4**	**★1673**
			1454-52
68HC05C8	Motorola	MC68HC05C8	1454-51
			1425-28
68HC05D2	**RCA**	**CDP68HC05D2**	**★1673**
			1454-53
68HC05E9	ThomsonCSF	EF68HC05E9	1453-160
68HC11	**Motorola**	**MC68HC11**	**★1664**
			★1666
			1425-29
68HC11A8	Motorola	MC68HC11A8	1454-56
68HC21	Motorola	MC68HC21	1455-56
			1469-133
68HC24	Motorola	MC68HC24	1470-10
68HC34	Motorola	MC68HC34	1470-29
		MCM68HC34	**★1662**
			★4122
			831-46
68HC51	**Motorola**	**MC68HC51**	**★1663**
			1454-134
			1469-95
68HC53	**Motorola**	**MC68HC53**	**★1663**
			1454-135
68HC68	**RCA**	**CDP68HC68**	**★3216**
68HC68A1	**RCA**	**CDP68HC68A1**	**★1673**
			★1679
68HC68R1	Motorola	MC68HC68R1	831-53
68HC68R2	Motorola	MC68HC68R2	831-54
68HC68T1	**RCA**	**CDP68HC68T1**	**★1673**
			★1679
68HC704P3	**Motorola**	**MC68HC704P3**	**★1669**
68K1	Omnibyte	OB68K1A	2025-1
		OB68K1A-128	2029-17
		OB68K1A-32	2029-18
68K10	SBE	M68K10	2029-19
68K2	Microbar	DBC68K2	2027-34
68KVM01	**Motorola**	**M68KVM01**	**★2114**
68KVM02	**Motorola**	**M68KVM02**	**★2114**
			2027-10
68KVM03	**Motorola**	**M68KVM03**	**★2115**
68KVM04	**Motorola**	**M68KVM04**	**★2115**
			2029-29
68KVM10	**Motorola**	**M68KVM10-3**	**★2115**
			2045-41
68KVM11	**Motorola**	**M68KVM11-1**	**★2115**
			2043-22
		M68KVM11-2	**★2115**
			2043-23
68KVM12	**Motorola**	**M68KVM12**	**★2115**
			2043-16
68KVM13	**Motorola**	**M68KVM13**	**★2115**
68KVM20	**Motorola**	**M68KVM20**	**★2115**
			2043-8
68KVM21	**Motorola**	**M68KVM21**	**★2115**
			2043-10
68KVM22	**Motorola**	**M68KVM22**	**★2116**
68KVM23	**Motorola**	**M68KVM23**	**★2116**
68KVM30	**Motorola**	**M68KVM30**	**★2116**
			2043-29
68KVM31	**Motorola**	**M68KVM31**	**★2116**
68KVM32	**Motorola**	**M68KVM32**	**★2116**
68KVM33	**Motorola**	**M68KVM33**	**★2116**
			2030-35
68KVM60	**Motorola**	**M68KVM60**	**★2116**
			2043-11
68KVM80	**Motorola**	**M68KVM80-1**	**★2116**
			2043-30
		M68KVM80-4	**★2116**
			2043-31
68KVMCC1	**Motorola**	**M68KVMCC1**	**★2117**
68KVMCH1	**Motorola**	**M68KVMCH1**	**★2117**
68KVMMB851	**Motorola**	**M68KVMMB851**	**★2115**
68KVMPM1	**Motorola**	**M68KVMPM1**	**★2117**
68MM01	Motorola	M68MM01	2007-14
		M68MM01B	2007-19
		M68MM01D	2007-16
68MM01A2	Motorola	M68MM01A2	2007-15
68MM01B1	Motorola	M68MM01B1A	2007-20
68MM17	Motorola	M68MM17	2007-22

Arranged alphanumerically from left to right.

Base Number	Source	Device	Page-Line
68MM19			
	Motorola	M68MM19	2007-23
		M68MM19A	2007-26
68P01M0			
	Hitachi	HD68P01M0	1419-32
68P01V07			
	Hitachi	HD68P01V07	1419-33
68P05V07			
	Hitachi	HD68P05V07	1419-34
68RAD1			
	Motorola	M68RAD1-1	2031-36
68RI01	Motorola	M68RI01-1	2045-5
68SC21	Mitel	MD68SC21	1455-51
68SC40	Mitel	MD68SC40	1470-68
68SC49	Mitel	MD68SC49	1454-139
			¶ 365-18
		MD68SC49A	1463-138
		MD68SC49B	1454-140
			1457-118
			1457-304
			1457-439
			1460-86
			1463-139
			1464-79
			¶ 369-17
68SC84	Mitel	MD68SC84	1455-28
69	RCIData	CMC69/04	2013-34
		CMC69/04A	2013-35
		CMC69/15	2013-32
690	Motorola	MC690	852-5
6900	NEC	μPD6900	2856-1
6901	**Goldstar**	**GL6901**	★ **3580**
			3381-33
691	Motorola	MC691	853-5
6910	OKI	MSM6910	3377-58
6912	**OKI**	**MSM6912**	★ **4733**
			3379-74
	Panasonic	AN6912	3316-25
6913	**OKI**	**MSM6913**	★ **4733**
6914	**OKI**	**MSM6914**	★ **4733**
6917	OKI	MSM6917	3377-150
6920	**OKI**	**MSM6920**	★ **4733**
			3381-119
6926	**OKI**	**MSM6926**	★ **4733**
			3379-125
6927	**OKI**	**MSM6927**	★ **4733**
			3379-124
6928	**OKI**	**MSM6928**	★ **4733**
693	Motorola	MC693	852-71
			2898-97
6932	**OKI**	**MSM6932AS**	★ **4733**
			3377-68
6933	**OKI**	**MSM6933AS**	★ **4733**
			3377-129
6945	**OKI**	**MSM6945**	★ **4733**
			3381-120
6946	**OKI**	**MSM6946**	★ **4733**
			3379-117
6947	**OKI**	**MSM6947**	★ **4733**
			3379-115
6950	NEC	μPD6950	2837-46
	OKI	**MSM6950**	★ **4733**
			3377-2
6956	**OKI**	**MSM6956**	★ **4732**
696	Motorola	MC696	852-107
6962	**OKI**	**MSM6962RS**	★ **4733**
			3377-69
6963	**OKI**	**MSM6963**	★ **4733**
			3377-130
697	Motorola	MC697	852-6
699	Motorola	MC699	852-36
6992	**OKI**	**MSM6992**	★ **4733**
			1465-23
6L16	**MMI**	**PAL6L16AC**	★ **4682**
			4470-34
6LP00	**Signetics**	**ACE6LP00**	★ **4747**
			4455-9
60V12	Lambda	L60V12	3401-38
60V15	Lambda	L60V15	3401-39
60V24	Lambda	L60V24	3401-40
60V5	Lambda	L60V5	3401-41
60V6	Lambda	L60V6	3401-42
6T00	**Signetics**	**ACE6T00**	★ **4747**
			4455-8
7	Cromemco	D+7A	2038-19
	Datel	**SHM-7MC**	★ **3163**
			(Continued)

Base Number	Source	Device	Page-Line
7	Datel	SHM-7MC	3404-2
		SHM-7MR	★ **3163**
			3404-3
	Supertex	DC-7	¶ 399-16
		DC7	838-5
	TeledyneC	CAG7	2826-98
		CAG7-10	2826-99
70	**Burr-Brown**	**DAC70-CCD-I**	★ **3146**
			2873-16
		DAC70-COB-I	★ **3146**
			2872-52
		DAC70-CSB-I	★ **3146**
			2872-43
	Intel	**BPK70AZ**	★ **4069**
			2046-40
	MCE	MCE70	3357-126
	Motorola	**BPK70**	★ **4125**
	Telefunken	CNY70	¶ 420-8
700	AnalogSys	MA700	3331-1
			3357-78
	AMCC	**Q700**	★ **4602**
			4439-3
	Burr-Brown	**DAC700B**	★ **3147**
			2871-47
		DAC700K	★ **3147**
			2871-48
	CalDevices	**DLM700**	★ **4605**
			4440-24
	Inmos	**IMSD700**	★ **1903**
	ITT	TCA700	3319-142
	TeledyneS	TSC700A	2876-97
			¶ 399-6
	Telesis	EDA-700	
		Des W/S	4935-3
7000	AT&T	T7000A	3379-11
	Exar	**XR7000**	★ **3562**
			3307-4
	GI	PIC7000	1470-80
			¶ 364-14
			¶ 365-5
			1417-20
	Holt	HI7000	3320-133
	Signetics	**SAA7000**	★ **3727**
			3316-129
		TDA7000	★ **3696**
			★ **3727**
			★ **3728**
			3322-93
	TI	EVM7000	1821-15
		TMS7000	1470-81
			1431-7
70003	MCE	MT70003	837-48
7001	AT&T	T7001	3380-112
	GI	PIC7001	1470-93
	NCM	NCM7001XZ	4452-16
			4452-17
	NEC	μPD7001	2837-19
			1457-77
			1469-54
	Sprague	ULN-7001	¶ 398-7
70014	MCE	MT70014	837-49
7002	NEC	μPD7002	2843-1
			1457-78
			1469-55
	TI	TMS7002	1431-8
7003	NEC	μPD7003	2837-27
7004	NEC	μPD7004	2839-1
	SMC	CRT7004	3808-16
7008	NEC	μPD7008	1460-116
		μPD7008A	1460-117
70090	IMI	G70090	4449-10
701	**Burr-Brown**	**DAC701B**	★ **3147**
			2872-14
		DAC701K	★ **3147**
			2872-15
	Matrix	CP701	2019-11
	Motorola	**MVME701**	★ **2112**
	TeledyneS	TSC701AM	2876-74
7010	AT&T	T7010	3379-102
	Signetics	**SAA7010**	★ **3727**
			3316-130
		TDA7010T	★ **3727**
			3322-94
70100	GI	PIC70100	1470-89
70108	NEC	IE-70108-5	1819-8
		μPD70108-5	1462-90
			(Continued)

Base Number	Source	Device	Page-Line
70108	NEC	μPD70108-8	1462-91
			1427-9
7011	NEC	μPD7011	2854-48
	Sanyo	LA7011	3404-157
70116	NEC	IE-70116-5	1819-9
		IPD70116-10	1437-1
		μPD70116-5	1462-92
		μPD70116-8	1462-93
70120	GI	PIC70120	1470-90
702	**Burr-Brown**	**DAC702B**	★ **3147**
			2871-49
		DAC702K	★ **3147**
			2871-50
		DAC702S	★ **3147**
			2871-45
		MP702	2034-11
	DY-4	DVME-702	2027-19
			2046-5
	SGS	L702	3309-168
	TI	**μA702M**	★ **718**
			3354-27
7020	GI	PIC7020	1470-82
			1417-21
	Holt	HI7020	3320-135
	Signetics	**SAA7020**	★ **3727**
			3316-131
		TDA7020	★ **3696**
			★ **3727**
			3322-95
	TI	TMS7020	1470-84
			1431-9
70208	NEC	μPD70208	1433-22
70216	NEC	μPD70216	1437-2
70250	IMI	G70250	4449-15
703	**Burr-Brown**	**DAC703B**	★ **3147**
			2872-16
		DAC703K	★ **3147**
			2872-17
		DAC703S	★ **3147**
			2872-19
	DY-4	DSTD-703	2042-41
7030	**LSIComp**	**LS7030**	★ **1099**
			890-61
	Signetics	**SAA7030**	★ **3727**
			3316-132
7031	**LSIComp**	**LS7031**	★ **1099**
			890-58
7034	**ThomsonCSF**	**TEA7034**	★ **3738**
			3319-146
			3384-53
70350	IMI	G70350	4449-18
7040	GI	PIC-7040	1417-11
		PIC7040	1470-32
			1470-83
			1417-22
	LSIComp	LS7040	890-52
	TI	TMS7040	1470-37
			1470-85
			1431-10
7041	GI	PIC-7041	1417-12
		PIC7041	1470-87
			¶ 367-7
			1417-23
	TI	TMS7041	1470-88
			1431-11
7042	Intech	7042H	3405-70
	TI	TMS7042	1431-12
7047	Intersil	ICM7047	3320-122
70490	IMI	G70490	4449-21
705	**Burr-Brown**	**DAC705B**	★ **3146**
			2872-25
		DAC705K	★ **3146**
			2872-26
		DAC705S	★ **3146**
			2872-27
	Motorola	**MVME705**	★ **2112**
	SGS	M705	834-100
	VTC	**VA705**	★ **3742**
			3334-213
		VA705J	★ **3742**
			3357-82
		VA705K	★ **3742**
			3354-12
		VA705L	★ **3742**
			3346-130
			(Continued)

Base Number	Source	Device	Page-Line
705	**VTC**	**VA705M**	★ **3742**
			3354-11
		VA705N	★ **3742**
			3346-129
7050	LSIComp	LS7050	890-55
	Signetics	**TDA7050**	★ **3710**
			★ **3728**
			★ **3729**
			3318-190
7055	**LSIComp**	**LS7055**	★ **1099**
			890-56
7056	**LSIComp**	**LS7056**	★ **1099**
			890-57
706	**Burr-Brown**	**DAC706B**	★ **3146**
			2871-51
		DAC706K	★ **3146**
			2871-52
		DAC706S	★ **3146**
			2871-53
	Motorola	**MVME706**	★ **2112**
	VTC	**VA706**	★ **3742**
			3334-214
		VA706J	★ **3742**
			3357-158
		VA706K	★ **3742**
			3357-133
		VA706L	★ **3742**
			3357-79
7060	GI	PIC7060	1470-91
	LSIComp	**LS7060**	★ **1099**
			890-63
			¶ 399-1
	Toshiba	TA7060A	3321-80
7061	**LSIComp**	**LS7061**	★ **1099**
			890-64
			¶ 399-1
	Toshiba	TA7061B	3321-81
7062	**LSIComp**	**LS7062**	★ **1099**
			890-53
7063	**LSIComp**	**LS7063**	★ **1099**
			890-54
	Toshiba	TA7063	3319-26
70630	IMI	G70630	4449-23
7066	**LSIComp**	**LS7066**	★ **1099**
			890-62
707	**Burr-Brown**	**DAC707B**	★ **3146**
			2872-28
		DAC707K	★ **3146**
			2872-29
		DAC707S	★ **3146**
			2872-30
	Motorola	**MVME707**	★ **2112**
	VTC	**VA707**	★ **3742**
			3357-80
7072	Fujitsu	MB7072E	847-65
			3832-111
		MB7072N	847-66
			3832-115
7074	Sprague	ULN-7074B	¶ 398-7
708	**Burr-Brown**	**DAC708B**	★ **3146**
			2871-54
		DAC708K	★ **3146**
			2872-1
		DAC708S	★ **3146**
			2872-2
	Motorola	**MVME708**	★ **2112**
7080	GI	PIC7080	1470-92
	Goldstar	LL7080	4445-36
	LSILogic	**LL7080**	★ **4676**
			4449-46
70810	IMI	G70810	4449-24
7086	National	DM7086	¶ 400-2
709	**Burr-Brown**	**DAC709B**	★ **3146**
			2872-31
		DAC709K	★ **3146**
			2872-32
		DAC709S	★ **3146**
			2872-33
	Fairchild	μA709AM	3346-122
		μA709C	3356-36
		μA709M	3353-39
	Motorola	MHW709	3307-114
	National	LM709	3353-40
		LM709A	3346-123
		LM709C	3356-37
	SGS	M709	3326-17
			(Continued)

¶ Indicates page number in Application Note Directory.
★ Indicates additional data is provided on the page noted.

Base Number	Source	Device	Page-Line
709	TI	**μA709AM**	★ **718**
			3346-125
		μA709M	★ **718**
			3354-9
7093	National	DM7093	856-92
			¶ 361-1
7094	National	DM7094	856-118
7095	National	DM7095	856-156
7096	National	DM7096	857-185
7097	National	DM7097	856-157
7098	National	DM7098	857-186
70C00	TI	TMS70C00	1470-77
70C20	TI	TMS70C20	1470-78
70C40	TI	TMS70C40	1470-38
			1470-86
70C42	TI	TMS70C42	1431-13
70C95	National	MM70C95	809-108
70C96	National	MM70C96	811-92
70C97	National	MM70C97	809-109
70C98	National	MM70C98	811-93
70P162	TI	SE70P162	1431-6
71	AD	ADADC71J	2847-13
		ADADC71K	2847-1
		ADDAC71-COB-I	★ **3113**
			★ **3131**
			2872-5
		ADDAC71-COB-V	★ **3113**
			★ **3131**
			2872-21
		ADDAC71-CSB-I	★ **3113**
			★ **3131**
			2872-6
		ADDAC71-CSB-V	★ **3113**
			★ **3131**
			2872-22
	Burr-Brown	**ADC71J**	★ **3146**
			2847-28
		ADC71K	★ **3146**
			2847-15
		DAC71-CCD-V	★ **3146**
			2873-17
		DAC71-COB-V	★ **3146**
			2873-18
		DAC71-CSB-V	★ **3146**
			2872-35
	MicroNet	**DAC71**	★ **3204**
			2865-36
710	**AMCC**	**Q710**	★ **4602**
			4439-2
	Burr-Brown	**DAC710**	★ **3147**
			2872-49
		MP710	2034-9
		MP710-NS	2034-10
	Fairchild	μA710C	3313-5
		μA710M	3312-29
	Motorola	MHW710	3307-115
	National	LM710	3312-30
		LM710C	3313-6
	SGS	M710	3326-18
	TI	**TL710**	★ **719**
		μA710M	★ **719**
			3312-31
7100	AD	AD7100 Series	¶ 393-17
			¶ 393-18
	AT&T	T7100	1468-14
	LSIComp	**LS7100**	★ **1099**
			2876-1
	MicroNet	**MN7100**	★ **3202**
	Weitek	WTE7100	2037-5
71000	Goldstar	LL71000	4446-6
	LSILogic	**LL71000**	★ **4676**
			4450-28
	OKI	**MSM71000**	★ **4733**
			4453-19
71001	TI	VM71001	3323-104
71002	TI	VM71002	3323-105
71003	TI	VM71003	3323-106
7101	AT&T	T7101	1468-13
	Goldstar	**GL7101**	★ **3580**
			3327-135
71011	NEC	μPD71011	1468-55
7102	AT&T	T7102	1468-15
7104	Burr-Brown	MP7104	2034-7
	Intersil	ICL7104	¶ 393-8
		ICL7104-12	★ **3199**
			2846-11
		ICL7104-14	★ **3199**
			2846-31
		ICL7104-16	★ **3199**
			2847-30
71051	NEC	71051	1459-23
			1457-203
			1457-344
		μPD71051	2900-1
			1459-24
71054	NEC	μPD71054	1457-215
			1458-12
71057	NEC	μPD71057	1457-220
			1457-366
			1466-80
7106	**Intersil**	**ICL7106**	★ **3198**
			2848-4
			¶ 393-15
			¶ 393-19
			¶ 421-4
			¶ 421-12
	Maxim	ICL7106	2848-11
	TeledyneS	7106	¶ 392-3
			¶ 397-2
			¶ 397-8
		TSC7106	2848-25
			¶ 392-14
		TSC7106A	2848-26
7107	**Intersil**	**ICL7107**	★ **3198**
			2848-5
			¶ 393-15
			¶ 393-19
			¶ 421-12
	Maxim	ICL7107	2848-12
	TeledyneS	7107	¶ 397-2
		TSC7107	2848-27
		TSC7107A	2848-28
71071	NEC	μPD71071	1466-62
71082	NEC	μPD71082	1462-38
71083	NEC	μPD71083	1462-30
71084	NEC	μPD71084	1461-102
71086	NEC	μPD71086	1462-22
71087	NEC	μPD71087	1462-11
71088	NEC	μPD71088	1461-90
7109	**Datel**	**ADC-7109**	★ **3159**
			2844-10
	Intech	TS7109	¶ 392-11
	Intersil	**ICL7109**	★ **3199**
			2843-6
			¶ 393-19
	Maxim	ICL7109	2844-9
	TeledyneS	TSC7109	¶ 392-12
			¶ 393-2
		TSC7109BC	2843-7
		TSC7109C	2843-8
		TSC7109M	2843-9
711	AD	RTI-711	2035-40
	Burr-Brown	**DAC711**	★ **3147**
			2872-51
	DataTrans	DT711	2035-3
	DY-4	DSTD-711	2039-15
	Fairchild	μA711C	3314-31
		μA711M	3314-10
	National	LM711	3314-11
		LM711C	3314-32
	TI	**μA711M**	★ **719**
			3314-12
7110	AD	AD7110K	3316-111
	AT&T	T7110	1468-16
	Intel	7110	3826-4
	LSIComp	**LS7110**	★ **1099**
			891-102
			2831-48
	Motorola	**MBM7110A**	★ **4125**
			3826-5
7111	AD	AD7111K	3316-105
		AD7111L	3316-106
		AD7111T	3316-107
		AD7111U	3316-108
	Fujitsu	MB7111E	3814-34
		MB7111H	3814-18
7112	Fujitsu	MB7112E	3814-38
		MB7112E-2	3814-39
		MB7112H	3814-24
7113	Fujitsu	MB7113E	3814-89
		MB7113H	3814-80
7114	Fujitsu	MB7114E	3814-92
		MB7114E-2	3814-93
		MB7114E-W	3814-94
		MB7114H	3814-83
	Intel	7114	3826-7
7115	AD	AD7115K	3316-104
	Fujitsu	MB7115E	3815-33
		MB7115H	3815-25
	Intersil	**ICL7115**	★ **3199**
			2846-24
7116	Fujitsu	MB7116E	3815-36
		MB7116E-W	3815-37
		MB7116H	3815-27
	Intersil	**ICL7116**	★ **3198**
			2848-6
			¶ 393-15
	Maxim	ICL7116	2848-13
	TeledyneS	TSC7116	2848-29
		TSC7116A	2848-30
7117	Fujitsu	MB7117E	3815-9
		MB7117H	3815-6
	Intersil	**ICL7117**	★ **3198**
			2848-7
			¶ 393-15
	Maxim	ICL7117	2848-14
	TeledyneS	TSC7117	2848-31
7118	AD	AD7118K	3316-112
		AD7118L	3316-113
		AD7118T	3316-109
		AD7118U	3316-110
	Fujitsu	MB7118E	3815-11
		MB7118H	3815-7
71190	ThomsonCSF	SFC71190A	3819-60
		SFC71190B	3818-112
		SFC71190C	3818-90
71191	ThomsonCSF	SFC71191A	3819-38
		SFC71191B	3818-120
		SFC71191C	3818-101
712	DataTrans	DT712	2035-4
7120	**MicroNet**	**MN7120**	★ **3202**
			3399-11
		MN7120H	★ **3202**
			3399-12
	Sanyo	LC7120	3320-45
	Toshiba	TA7120	3319-27
7121	Fujitsu	MB7121E	3816-101
		MB7121H	3816-91
71210	IMI	G71210	4449-29
7122	Fujitsu	MB7122E	3817-3
		MB7122H	3816-93
	Toshiba	TA7122B	3319-28
7123	Fujitsu	MB7123E	3815-109
		MB7123H	3815-90
	National	DM7123	879-73
7124	Fujitsu	MB7124E	3816-6
		MB7124H	3815-95
7126	**Intersil**	**ICL7126**	★ **3198**
			2848-8
			¶ 393-15
	Maxim	ICL7126	2848-15
	Samsung	**KS7126**	★ **3220**
			2848-44
	TeledyneS	TSC7126	2848-32
		TSC7126A	2848-33
7127	Fujitsu	MB7127H	3818-14
		MB7127Y	3818-5
7128	Fujitsu	MB7128E	3818-31
		MB7128E-W	3818-26
			3818-32
		MB7128H	3818-16
		MB7128Y	3818-7
			3818-8
7129	**Intersil**	**ICL7129**	★ **3198**
			2848-61
	Maxim	ICL7129	2848-35
		ICL7129A	2848-36
	Toshiba	TA7129A	3319-29
713	DataTrans	DT713	2035-6
7130	IDT	IDT7130	¶ 439-8
		IDT7130L-100	★ **4048**
			3837-17
			(Continued)
7130	**IDT**	**IDT7130L-100B**	★ **4048**
			3837-18
		IDT7130L-120	★ **4048**
			3837-29
		IDT7130L-120B	★ **4048**
			3837-30
		IDT7130L-90	★ **4048**
			3837-15
		IDT7130S-100	★ **4048**
			3837-19
		IDT7130S-100B	★ **4048**
			3837-20
		IDT7130S-120	★ **4048**
			3837-31
		IDT7130S-120B	★ **4048**
			3837-32
		IDT7130S-90	★ **4048**
			3837-16
	MicroNet	**MN7130**	★ **3202**
			★ **3205**
			3404-45
			¶ 387-14
		MN7130H	★ **3202**
			★ **3205**
			3404-46
	National	DM7130	854-153
	Toshiba	TA7130	3326-80
7131	Fujitsu	MB7131	3817-74
		MB7131E	3817-105
		MB7131H	3817-90
	National	DM7131	854-86
	Sanyo	LC7131	3320-46
7132	Fujitsu	MB7132E	3817-108
		MB7132E-W	3817-109
		MB7132H	3817-92
		MB7132Y	3817-78
	IDT	IDT7132	¶ 439-8
		IDT7132L-100	★ **4049**
			3838-14
		IDT7132L-100B	★ **4049**
			3838-15
		IDT7132L-120	★ **4049**
			3838-49
		IDT7132L-120B	★ **4049**
			3838-50
		IDT7132L-90	★ **4049**
			3837-114
		IDT7132S-100	★ **4049**
			3838-16
		IDT7132S-100B	★ **4049**
			3838-17
		IDT7132S-120	★ **4049**
			3838-51
		IDT7132S-120B	★ **4049**
			3838-52
		IDT7132S-90	★ **4049**
			3837-115
7133	Fujitsu	MB7133E	3820-16
		MB7133H	3820-4
	Toshiba	TA7133	3376-22
7134	Fujitsu	MB7134E	3820-19
			3849-67
		MB7134H	3820-8
			3849-66
	Intersil	ICL7134	2870-31
7135	Intech	TSC7135	¶ 392-9
	Intersil	**ICL7135**	★ **3199**
			2848-58
	Maxim	ICL7135	2848-34
	Sanyo	LC7135	3320-47
	Siliconix	**SI7135**	★ **3248**
			★ **3254**
			2848-59
	TeledyneS	TSC7135	2848-60
			¶ 393-3
7136	**Intersil**	**ICL7136**	★ **3198**
			2848-9
	Maxim	ICL7136	2848-16
			(Continued)

Arranged alphanumerically from left to right.

Base Number	Source	Device	Page-Line
7136	National	DM7136	854-88
	Toshiba	TA7136A	3319-30
7137	Fujitsu	MB7137E	3819-29
		MB7137H	3818-111
	Intersil	**ICL7137**	★**3198** 2848-10
	Maxim	ICL7137	2848-57
	Toshiba	TA7137	3323-152
		TA7137-ST	3323-153
		TDA7137	3316-102
		TDA7137-ST	3316-103
7138	Fujitsu	MB7138E	3819-32
		MB7138E-W	3818-27 3818-35 3849-32
		MB7138H	3818-114
		MB7138Y	3818-93
	MicroPwr	**MP7138**	★**3206** 2848-17
		MP7138A	★**3206** 2848-18
714	DataTrans	DT714	2035-7
	Fairchild	A714	¶ 407-17
		μA714C	3357-211
		μA714EC	3338-47
		μA714M	3341-21 3338-43
	Raytheon	**RC714**	★**3666** 3338-40
		RC714C	★**3666** 3338-41
		RC714E	★**3666** 3338-42
7140	Goldstar	LL7140	4445-41
	IDT	**IDT7140**	★**4048**
	LSILogic	**LL7140**	★**4676** 4450-4
	MicroNet	**MN7140**	★**3202** 3399-13
		MN7140H	★**3202** 3399-14
	Toshiba	TA7140	3318-85
7141	Fujitsu	MB7141E	3820-51
		MB7141H	3820-46
	Toshiba	TA7141A	3325-49
7142	Fujitsu	MB7142E	3820-52
		MB7142E-W	3820-56 3849-71
		MB7142H	3820-47
	IDT	**IDT7142**	★**4049**
7143	Fujitsu	MB7143E	3821-62
		MB7143H	3821-50
7144	Fujitsu	MB7144E	3821-65
		MB7144E-W	3821-67
		MB7144H	3821-53
71440	IMI	G71440	4449-30
715	DataTrans	DT715	2035-9
	DY-4	DVME-715	2043-50
	Fairchild	μA715C	3334-225 3356-31
		μA715M	3334-226 3354-14
7150	**MicroNet**	**MN7150**	★**3202** 3399-38
	SGS	L7150	2896-53
7152	Fujitsu	MB7152-Y	3819-119
		MB7152E	3820-17
		MB7152E-W	3820-18
		MB7152H	3820-20
7157	Toshiba	TA7157A	3322-149
7158	Toshiba	TA7158	3400-139
716	DY-4	SVME-716	2043-51
7160	National	DM7160	854-80
7163	ITT	ITT7163	2896-99
7164	**Goldstar**	**GM7164P-10**	★**4022** 3827-14
		GM7164P-12	★**4022** 3827-27
		GM7164P-15	★**4022** 3827-50
	IDT	**IDT7164**	★**4055**
	ITT	ITT7164	2896-100
71681	IDT	IDT71681	¶ 438-9
		IDT71681L-100	★**4057** 3842-96
			(Continued)
71681	**IDT**	**IDT71681L-100B**	★**4057** 3842-97
		IDT71681L-45	★**4057** 3841-76
		IDT71681L-55	★**4057** 3842-10
		IDT71681L-55B	★**4057** 3842-11
		IDT71681L-70	★**4057** 3842-52
		IDT71681L-70B	★**4057** 3842-53
		IDT71681L-85	★**4057** 3842-83
		IDT71681L-85B	★**4057** 3842-84
		IDT71681LA-25	★**4057** 3841-6
		IDT71681LA-35	★**4057** 3841-35
		IDT71681LA-35B	★**4057** 3841-36
		IDT71681LA-45	★**4057** 3841-77
		IDT71681LA-45B	★**4057** 3841-78
		IDT71681LA-55	★**4057** 3842-12
		IDT71681LA-55B	★**4057** 3842-13
		IDT71681LA-70	★**4057** 3842-54
		IDT71681LA-70B	★**4057** 3842-55
		IDT71681S-100	★**4057** 3842-98
		IDT71681S-100B	★**4057** 3842-99
		IDT71681S-45	★**4057** 3841-79
		IDT71681S-55	★**4057** 3842-14
		IDT71681S-55B	★**4057** 3842-15
		IDT71681S-70	★**4057** 3842-56
		IDT71681S-70B	★**4057** 3842-57
		IDT71681S-85	★**4057** 3842-85
		IDT71681S-85B	★**4057** 3842-86
		IDT71681SA-25	★**4057** 3841-7
		IDT71681SA-35	★**4057** 3841-37
		IDT71681SA-35B	★**4057** 3841-38
		IDT71681SA-45	★**4057** 3841-80
		IDT71681SA-45B	★**4057** 3841-81
		IDT71681SA-55	★**4057**
			(Continued)
71681	IDT	IDT71681SA-55	3842-16
		IDT71681SA-55B	★**4057** 3842-17
		IDT71681SA-70	★**4057** 3842-58
		IDT71681SA-70B	★**4057** 3842-59
71682	**IDT**	**IDT71682L-100**	★**4057** 3842-100
		IDT71682L-100B	★**4057** 3842-101
		IDT71682L-45	★**4057** 3841-82
		IDT71682L-55	★**4057** 3842-18
		IDT71682L-55B	★**4057** 3842-19
		IDT71682L-70	★**4057** 3842-60
		IDT71682L-70B	★**4057** 3842-61
		IDT71682L-85	★**4057** 3842-87
		IDT71682L-85B	★**4057** 3842-88
		IDT71682LA-25	★**4057** 3841-8
		IDT71682LA-35	★**4057** 3841-39
		IDT71682LA-35B	★**4057** 3841-40
		IDT71682LA-45	★**4057** 3841-83
		IDT71682LA-45B	★**4057** 3841-84
		IDT71682LA-55	★**4057** 3842-20
		IDT71682LA-55B	★**4057** 3842-21
		IDT71682LA-70	★**4057** 3842-62
		IDT71682LA-70B	★**4057** 3842-63
		IDT71682S-100	★**4057** 3842-102
		IDT71682S-100B	★**4057** 3842-103
		IDT71682S-45	★**4057** 3841-85
		IDT71682S-55	★**4057** 3842-22
		IDT71682S-55B	★**4057** 3842-23
		IDT71682S-70	★**4057** 3842-64
		IDT71682S-70B	★**4057** 3842-65
		IDT71682S-85	★**4057** 3842-89
		IDT71682S-85B	★**4057** 3842-90
		IDT71682SA-25	★**4057** 3841-9
			(Continued)
71682	**IDT**	**IDT71682SA-35**	★**4057** 3841-41
		IDT71682SA-35B	★**4057** 3841-42
		IDT71682SA-45	★**4057** 3841-86
		IDT71682SA-45B	★**4057** 3841-87
		IDT71682SA-55	★**4057** 3842-24
		IDT71682SA-55B	★**4057** 3842-25
		IDT71682SA-70	★**4057** 3842-66
		IDT71682SA-70B	★**4057** 3842-67
71690	IMI	G71690	4449-31
717	**CTI**	**MA717**	★**1009** 843-8
7170	Intersil	ICM7170	1469-111
7176	Toshiba	TA7176A	3326-81
7180	Sprague	UDN-7180	¶ 397-4
		UDN-7180A	2877-63
7181	Sanyo	LC7181	3320-41
7183	Sprague	UDN-7183A	¶ 397-4
7184	Sanyo	LC7184	3320-42
	Sprague	UDN-7184A	¶ 397-4
7186	Sprague	UDN-7186A	¶ 397-4
7187	**IDT**	**IDT7187L-35**	★**4051** 3846-94
		IDT7187L-45	★**4051** 3847-8
		IDT7187L-45B	★**4051** 3847-9
		IDT7187L-55	★**4051** 3847-28
		IDT7187L-55B	★**4051** 3847-29
		IDT7187L-70	★**4051** 3847-47
		IDT7187L-70B	★**4051** 3847-48
		IDT7187L-85	★**4051** 3847-55
		IDT7187L-85B	★**4051** 3847-56
		IDT7187S-35	★**4051** 3846-95
		IDT7187S-45	★**4051** 3847-10
		IDT7187S-45B	★**4051** 3847-11
		IDT7187S-55	★**4051** 3847-30
		IDT7187S-55B	★**4051** 3847-31
		IDT7187S-70	★**4051** 3847-49
		IDT7187S-70B	★**4051** 3847-50
		IDT7187S-85	★**4051** 3847-12
		IDT7187S-85B	★**4051** 3847-57
7188	**IDT**	**IDT7188L-45**	★**4052** 3844-122
		IDT7188L-45B	★**4052** 3844-123
		IDT7188L-55	★**4052** 3845-28
		IDT7188L-55B	★**4052** 3845-29
		IDT7188L-70	★**4052** 3845-58
		IDT7188L-70B	★**4052** 3845-59
		IDT7188L-85	★**4052** 3845-77
			(Continued)

¶ Indicates page number in Application Note Directory.
★ Indicates additional data is provided on the page noted.

Base Number	Source	Device	Page-Line
7188	**IDT**	**IDT7188L-85B**	★**4052** 3845-78
		IDT7188S-45	★**4052** 3844-124
		IDT7188S-45B	★**4052** 3844-125
		IDT7188S-55	★**4052** 3845-30
		IDT7188S-55B	★**4052** 3845-31
		IDT7188S-70	★**4052** 3845-60
		IDT7188S-70B	★**4052** 3845-61
		IDT7188S-85	★**4052** 3845-79
		IDT7188S-85B	★**4052** 3845-80
7189	ThomsonCSF	EFB7189	3382-98
7191	Sanyo	LC7191	3320-43
7193	Toshiba	TA7193	3325-50
7198	**IDT**	**IDT7198L-45**	★**4053** 3845-22
		IDT7198L-45B	★**4053** 3845-23
		IDT7198L-55	★**4053** 3845-47
		IDT7198L-55B	★**4053** 3845-48
		IDT7198L-70	★**4053** 3845-71
		IDT7198L-70B	★**4053** 3845-72
		IDT7198L-85	★**4053** 3845-89
		IDT7198L-85B	★**4053** 3845-90
		IDT7198S-45	★**4053** 3845-24
		IDT7198S-45B	★**4053** 3845-25
		IDT7198S-55	★**4053** 3845-49
		IDT7198S-55B	★**4053** 3845-50
		IDT7198S-70	★**4053** 3845-73
		IDT7198S-70B	★**4053** 3845-74
		IDT7198S-85	★**4053** 3845-91
		IDT7198S-85B	★**4053** 3845-92
71981	**IDT**	**IDT71981L-45**	★**4054** 3845-14
		IDT71981L-45B	★**4054** 3845-15
		IDT71981L-55	★**4054** 3845-39
		IDT71981L-55B	★**4054** 3845-40
		IDT71981L-70	★**4054** 3845-63
		IDT71981L-70B	★**4054** 3845-64
		IDT71981L-85	★**4054** 3845-81
		IDT71981L-85B	★**4054** 3845-82
		IDT71981S-45	★**4054** 3845-16
		IDT71981S-45B	★**4054** 3845-17
		IDT71981S-55	★**4054** 3845-41
		IDT71981S-55B	★**4054** 3845-42
		IDT71981S-70	★**4054** 3845-65 (Continued)

Base Number	Source	Device	Page-Line
71981	**IDT**	**IDT71981S-70B**	★**4054** 3845-66
		IDT71981S-85	★**4054** 3845-83
		IDT71981S-85B	★**4054** 3845-84
71982	**IDT**	**IDT71982L-45**	★**4054** 3845-18
		IDT71982L-45B	★**4054** 3845-19
		IDT71982L-55	★**4054** 3845-43
		IDT71982L-55B	★**4054** 3845-44
		IDT71982L-70	★**4054** 3845-67
		IDT71982L-70B	★**4054** 3845-68
		IDT71982L-85	★**4054** 3845-85
		IDT71982L-85B	★**4054** 3845-86
		IDT71982S-45	★**4054** 3845-20
		IDT71982S-45B	★**4054** 3845-21
		IDT71982S-55	★**4054** 3845-45
		IDT71982S-55B	★**4054** 3845-46
		IDT71982S-70	★**4054** 3845-69
		IDT71982S-70B	★**4054** 3845-70
		IDT71982S-85	★**4054** 3845-87
		IDT71982S-85B	★**4054** 3845-88
71LS95	National	DM71LS95	857-64
71LS97	National	DM71LS97	857-65
71S96	National	DM71S96	858-68
71S98	National	DM71S98	858-69
72	AD	ADADC72J	2847-14
		ADADC72K	2847-2
		ADDAC72-COB-I	★**3113** ★**3131** 2872-7
		ADDAC72-COB-V	★**3113** ★**3131** 2872-23
		ADDAC72-CSB-I	★**3113** ★**3131** 2872-8
		ADDAC72-CSB-V	★**3113** ★**3131** 2872-24
	Burr-Brown	ADC72A	2847-25
		ADC72B	2847-16
		ADC72J	2847-26
		ADC72K	2847-27
		DAC72-CCD-V	★**3146** 2873-19
		DAC72-COB-V	★**3146** 2872-36
		DAC72-CSB-V	★**3146** 2872-37
	Intel	BPK72	¶ 431-9 ¶ 431-10
		BPK72AZ	★**4070** 2046-41
	Lomas	LDP72	2038-11
	MCE	MCE72	3368-16
720	**AMCC**	**Q720**	★**4602** 4439-1
	Calmos	CA720	4441-8 (Continued)

Base Number	Source	Device	Page-Line
720	ITT	TCA720	3317-5
	Reticon	R0720B	3400-10
7200	**CalDevices**	**CHA7200**	★**4610** 4440-41
		DLM7200	★**4605** 4440-42
	Sanyo	LC7200	3321-112
72000	**OKI**	**MSM72000**	★**4733** 4453-20
7201	IDT	IDT7201	¶ 435-7
		IDT7201-120	★**1082** 3810-1
		IDT7201-125B	★**1082** 3810-6
		IDT7201-50	★**1082** 3810-24
		IDT7201-50B	★**1082** 3810-19
		IDT7201-80	★**1082** 3810-14
		IDT7201-80B	★**1082** 3810-9
		IDT7201L-120	★**1082** 3810-2
		IDT7201L-120B	★**1082** 3810-3
		IDT7201L-50	★**1082** 3810-20
		IDT7201L-50B	★**1082** 3810-21
		IDT7201L-65	★**1082** 8810-15
		IDT7201L-65B	★**1082** 3810-16
		IDT7201L-80	★**1082** 3810-10
		IDT7201L-80B	★**1082** 3810-11
		IDT7201S-120	★**1082** 3810-4
		IDT7201S-120B	★**1082** 3810-5
		IDT7201S-50	★**1082** 3810-22
		IDT7201S-50B	★**1082** 3810-23
		IDT7201S-65	★**1082** 3810-17
		IDT7201S-65B	★**1082** 3810-18
		IDT7201S-80	★**1082** 3810-12
		IDT7201S-80B	★**1082** 3810-13
	Intersil	ICM7201	3400-92
	NEC	µPD7201A	2901-10
	Sanyo	LC7201	3321-113
7202	IDT	IDT7202	¶ 435-7
		IDT7202-120	★**1082** 3810-29
		IDT7202-125B	★**1082** 3810-30
		IDT7202-50	★**1082** 3810-45
		IDT7202-55B	★**1082** 3810-46
		IDT7202-80	★**1082** 3810-35
		IDT7202-85B	★**1082** 3810-36
		IDT7202L-120	★**1082** 3810-25
		IDT7202L-120B	★**1082** 3810-26
		IDT7202L-50	★**1082** 3810-41
		IDT7202L-50B	★**1082** 3810-42
		IDT7202L-65	★**1082** 3810-37
		IDT7202L-65B	★**1082** 3810-38
		IDT7202L-80	★**1082** (Continued)

Base Number	Source	Device	Page-Line
7202	IDT	IDT7202L-80	3810-31
		IDT7202L-80B	★**1082** 3810-32
		IDT7202S-120	★**1082** 3810-27
		IDT7202S-120B	★**1082** 3810-28
		IDT7202S-50	★**1082** 3810-43
		IDT7202S-50B	★**1082** 3810-44
		IDT7202S-65	★**1082** 3810-39
		IDT7202S-65B	★**1082** 3810-40
		IDT7202S-80	★**1082** 3810-33
		IDT7202S-80B	★**1082** 3810-34
7203	Sanyo	LC7203	3321-114
7205	Lambda	LAS7205	¶ 427-5
	Toshiba	TA7205A	3318-26
7206	**Intersil**	**ICM7206A**	★**3604** 3382-66
		ICM7206B	★**3604** 3382-67
		ICM7206C	★**3604** 3382-68
		ICM7206D	★**3604** 3382-69
72065	NEC	µPD72065	1467-33
7207	**Intersil**	**7207**	★**1090**
		ICM7207	★**1090** 834-119
		ICM7207A	★**1090** 834-120
	Sanyo	LC7207	3321-115
	Toshiba	TA7207	3318-86
7208	Burr-Brown	MP7208	2033-60
	Intersil	**ICM7208**	★**1089** 814-109
7209	**IDT**	**IDT7209**	★**1085** ★**1088** 843-87
		IDT7209L	★**1085** ★**1088** 807-75
		IDT7209LB	★**1085** ★**1088** 807-76
	Intersil	**ICM7209**	★**1090** 834-116 2894-11
7210	**IDT**	**IDT7210**	★**1084** ★**1088** 843-94
		IDT7210L	★**1084** ★**1088** 808-11
		IDT7210LB	★**1084** ★**1088** 808-12
	LSIComp	**LS7210**	★**1099** 837-133 3383-23
	National	DM7210	¶ 359-12
	Sanyo	LC7210	3321-60 3375-128
	SMC	COM7210	1457-161 1457-327 1461-116 1458-1
7211	Hughes	HLCD7211-1	2876-49
		HLCD7211-2	2876-50
		HLCD7211-3	2876-84
		HLCD7211-4	2876-85
	Intech	TS7211A	¶ 392-11
		TSC7211AM	¶ 399-7
	Intersil	**ICM7211**	★**1091** 819-111 2876-77
		ICM7211A	★**1091** 819-112 2876-78
		ICM7211AM	★**1091** (Continued)

Arranged alphanumerically from left to right.

Base Number	Source	Device	Page-Line
7211	Intersil	ICM7211AM	819-106
			2876-60
		ICM7211M	★**1091**
			819-107
			2876-61
	Maxim	ICM7211	816-145
			2876-79
		ICM7211A	816-146
			2876-80
		ICM7211AM	816-143
			2876-62
		ICM7211M	816-144
			2876-63
	SGS	TDA7211	3321-127
	TeledyneS	TSC7211A	2876-96
			¶ 392-12
		TSC7211AM	2876-64
7212	Intech	TSC7212AM	¶ 399-7
	IDT	**IDT7212**	★**1087**
			★**1088**
			843-52
		IDT7212L	★**1087**
			★**1088**
			807-116
		IDT7212LB	★**1087**
			★**1088**
			807-117
	Intersil	**ICM7212**	★**1091**
			819-121
			2876-65
		ICM7212A	★**1091**
			819-122
			2876-66
		ICM7212AM	★**1091**
			819-125
			2876-69
		ICM7212M	★**1091**
			819-126
			2876-70
	Maxim	ICM7212	819-123
			2876-67
		ICM7212A	819-124
			2876-68
		ICM7212AM	816-147
			2876-71
		ICM7212M	816-148
			2876-72
	SGS	TDA7212	3321-128
	TeledyneS	TSC7212A	2876-75
		TSC7212AM	2876-76
7213	**IDT**	**IDT7213**	★**1087**
			★**1088**
			843-53
		IDT7213L	★**1087**
			★**1088**
			807-118
		IDT7213LB	★**1087**
			★**1088**
			807-119
	Intersil	**ICM7213**	★**1090**
			834-121
7214	National	DM7214	878-33
			¶ 361-1
7215	**Intersil**	**7215**	★**1089**
		ICM7215	★**1089**
			2876-134
	SGS	TDA7215	3321-129
	Toshiba	TA7215	3318-194
7216	Burr-Brown	MP7216	2034-1
	IDT	**IDT7216**	★**1086**
			★**1088**
			843-66
		IDT7216L	★**1086**
			★**1088**
			807-139
		IDT7216LB	★**1086**
			★**1088**
			807-140
	Intersil	**ICM7216**	★**1089**
			816-93
		ICM7216A	★**1089**
			890-48
		ICM7216B	★**1089**
			890-49
		ICM7216C	★**1089**
			890-59
7216	**Intersil**	**ICM7216D**	★**1089**
			890-60
7217	**IDT**	**IDT7217**	★**1086**
			★**1088**
			843-67
		IDT7217L	★**1086**
			★**1088**
			807-141
		IDT7217LB	★**1086**
			★**1088**
			807-142
	Intersil	**ICM7217**	★**1089**
			816-32
		ICM7217A	★**1089**
			816-33
		ICM7217B	★**1089**
			816-38
			890-41
		ICM7217C	★**1089**
			816-39
			890-42
	Maxim	ICM7217	816-36
		ICM7217A	816-37
		ICM7217B	816-42
			890-44
		ICM7217C	816-43
			890-45
	Toshiba	TA7217A	3318-27
7218	Burr-Brown	MP7218	2034-2
	Intersil	**ICM7218A**	★**1091**
			891-93
			2874-118
		ICM7218B	★**1091**
			891-94
			2874-119
		ICM7218C	★**1091**
			891-95
			2874-120
		ICM7218D	★**1091**
			891-96
			2874-121
		ICM7218E	★**1091**
			891-97
			2874-122
	Maxim	ICM7218A	891-98
			2874-123
		ICM7218B	891-99
			2874-124
		ICM7218C	891-100
			2874-125
		ICM7218D	891-101
			2874-126
722	Burr-Brown	722	3399-64
7220	Goldstar	LL7220	4445-44
	Intel	7220	2892-3
			1465-30
	LSIComp	**LS7220**	★**1099**
			3327-128
			¶ 356-3
	LSILogic	**LL7220**	★**4676**
			4450-11
	NEC	μPD7220A	1465-87
			1465-92
		μPD7220A-1	1465-88
		μPD7220A-2	1465-89
	Sanyo	LC7220	3321-61
			3375-129
	SGS	TDA7220	3319-76
	SMC	CRT7220	1465-93
		CRT7220-1	1465-94
		CRT7220-2	1465-95
	TI	7220	¶ 431-18
7222	Toshiba	TA7222A	3318-28
7223	MicroPwr	MP7223	3379-116
7224	AD	AD7224	¶ 386-14
		AD7224B	★**3109**
			2855-5
		AD7224C	★**3109**
			2854-49
		AD7224K	★**3109**
			2855-6
		AD7224L	★**3109**
			2854-50
	Intersil	**ICM7224**	★**1089**
			816-20
		ICM7224A	★**1089**
7224	Intersil	ICM7224A	816-21
	Maxim	ICM7224	816-65
7225	**AD**	**AD7225K**	★**3109**
			2854-51
		AD7225L	★**3109**
			2853-40
	Intersil	**ICM7225**	★**1089**
			816-22
		ICM7225A	★**1089**
			816-23
	LSIComp	**LS7225**	★**1099**
			3327-129
	Maxim	ICM7225	816-66
	NEC	μPD7225	2874-62
			1458-16
	Sanyo	LC7225	3321-62
			3375-130
7226	AD	AD7226	¶ 393-14
		AD7226B	★**3110**
			2855-21
		AD7226K	★**3110**
			2855-22
		AD7226T	★**3110**
			2855-23
	Fujitsu	MB7226-RA-20	3815-77
	Intersil	**ICM7226**	★**1089**
			816-94
		ICM7226A	★**1089**
			890-50
		ICM7226B	★**1089**
			890-51
	LSIComp	**LS7226**	★**1099**
			3327-130
7227	**Intersil**	**ICM7227**	★**1089**
			816-34
		ICM7227A	★**1089**
			816-35
		ICM7227B	★**1089**
			816-40
			890-43
		ICM7227C	★**1089**
			816-41
			890-46
	NEC	μPD7227	2874-68
			1466-85
	Toshiba	TA7227	3318-170
7228	**LSIComp**	**LS7228**	★**1099**
			3327-131
	NEC	μPD7228	2874-69
			1466-86
7229	**LSIComp**	**LS7229**	★**1099**
			3327-132
723	Fairchild	μA723C	3393-114
		μA723M	3393-115
	Intersil	μA723	3393-117
	Lambda	LAS723	3394-7
		LAS723B	3394-25
			¶ 425-2
	National	LM723	3393-120
		LM723C	3393-121
	Raytheon	RC723	3393-122
		RM723	3393-123
	RCA	CA723	3393-124
		CA723C	3393-125
	Samsung	**LM723**	★**3679**
			3393-126
	SGS	LM723	3393-127
		LM723C	3393-128
	Signetics	**A723**	★**3724**
		SA723C	3393-129
		μA723	★**3721**
			★**3730**
			3393-130
		μA723C	★**3721**
			★**3730**
			3393-131
	SiliconG	SG723	3393-132
		SG723C	3393-133
	TI	**μA723M**	★ **720**
			3393-134
7230	Intel	7230	2892-6
	National	DM7230	¶ 361-1
	Toshiba	TA7230	3318-195
7231	**Intersil**	**ICM7231**	★**1091**
			2877-44
	LSIComp	**LS7231**	★**1099**
7231	LSIComp	LS7231	3328-34
	Maxim	ICM7231	2877-45
		MAX7231A	2877-46
		MAX7231B	2877-47
		MAX7231C	2877-48
7232	**Fujitsu**	**MB7232-RA-20**	★**4021**
			3817-62
	Intersil	**ICM7232**	★**1091**
			2877-75
	LSIComp	**LS7232**	★**1099**
			3328-35
	Maxim	ICM7232	2877-76
		MAX7232A	2877-77
		MAX7232B	2877-78
		MAX7232C	2877-79
	Toshiba	TA7232	3318-196
7233	**Intersil**	**ICM7233**	★**1091**
			2876-53
	LSIComp	**LS7233**	★**1099**
			3328-36
	Maxim	ICM7233	2876-54
		MAX7233A	2876-55
		MAX7233B	2876-56
	Toshiba	TA7233	3318-197
7234	**Intersil**	**ICM7234**	★**1091**
			2876-111
	LSIComp	**LS7234**	★**1099**
			3328-37
	Maxim	ICM7234	2876-112
		MAX7234A	2876-113
		MAX7234B	2876-114
7235	**Intersil**	**ICM7235**	★**1091**
			2876-87
		ICM7235A	★**1091**
			2876-88
		ICM7235AM	★**1091**
			2876-89
		ICM7235M	★**1091**
			2876-90
	LSIComp	**LS7235**	★**1099**
			3328-38
7236	**Intersil**	**ICM7236**	★**1089**
			816-18
		ICM7236A	★**1089**
			816-19
7237	**LSIComp**	**LS7237**	★**1099**
			3328-39
	Toshiba	TA7237A	3318-146
7238	Toshiba	TA7238	3318-29
724	AD	RTI-724	2035-39
	Analogic	AD/AM-724	2846-22
	Burr-Brown	724	3399-65
	DataTrans	DT724	2035-31
7240	AD	AD7240J	2868-11
		AD7240K	2867-39
		AD7240S	2868-12
		AD7240T	2867-40
	Intersil	**ICM7240**	★**1090**
			3383-19
	LSIComp	LS7240	890-26
	Maxim	ICM7240	3383-24
	Toshiba	TA7240A	3318-171
7241	Motorola	MC7241	874-90
	Toshiba	TA7241A	3318-172
7242	Intel	7242	2899-12
	Intersil	**ICM7242**	★**1090**
			3383-20
	Maxim	ICM7242	3383-25
	Motorola	MC7242	874-156
	Toshiba	TA7242	3327-2
7243	**IDT**	**IDT7243**	★**1084**
			★**1088**
			843-95
		IDT7243L	★**1084**
			★**1088**
			808-13
		IDT7243LB	★**1084**
			★**1088**
			807-79
	Intersil	**ICM7243**	★**1091**
			2877-25
	Toshiba	TA7243	3326-82
7249	**Intersil**	**7249**	★**1089**
		ICM7249	★**1089**
			3383-3

(Continued)

¶ Indicates page number in Application Note Directory.
★ Indicates additional data is provided on the page noted.

Base Number	Source	Device	Page-Line
7249	**Intersil**	**ICM7249M**	★**1089**
			3383-4
725	Fairchild	μA725AM	3343-20
		μA725C	3346-148
		μA725EC	3341-62
		μA725M	3345-5
	National	LM725	3345-6
		LM725A	3341-45
			3345-20
		LM725C	3346-149
	PMI	PM-725	3345-4
		PM-725C	3346-150
		PM725	¶ 414-11
		SSS725	¶ 406-7
	Raytheon	RC725	3346-151
7250	Intel	7250	2892-9
	Intersil	**ICM7250**	★**1090**
			3383-21
	Maxim	ICM7250	3383-26
	Motorola	MC7250	862-74
	Sanyo	LC7250	3321-117
	Siliconix	**SI7250**	★**3260**
			2829-2
			2892-10
			¶ 399-5
7252	Toshiba	TA7252	3318-173
7253	Sanyo	LC7253	3321-72
7254	Intel	7254	2892-17
			2898-69
	Siliconix	VQ7254	2898-78
	Supertex	VQ7254	2898-84
7255	NEC	μPD7255	2877-110
7257	Sanyo	LC7257	3321-73
7258	Sanyo	LC7258	3321-74
726	Fairchild	μA726M	3404-124
7260	**Intersil**	**ICM7260**	★**1090**
			3383-22
	Maxim	ICM7260	3383-27
	Motorola	MC7260	855-14
	NEC	μPD7260	1467-90
7261	**LSIComp**	**LS7261**	★**1099**
			2895-77
	Motorola	MC7261	854-157
	NEC	μPD7261AH	1466-66
	SMC	HDC7261	1468-92
7262	**LSIComp**	**LS7262**	★**1099**
			3327-143
			3400-97
7263	**LSIComp**	**LS7263**	★**1099**
			2895-143
	Toshiba	TA7263	3318-174
7264	**LSIComp**	**LS7264**	★**1099**
			3327-144
			3400-98
	Toshiba	TA7264	3318-175
7265	NEC	μPD7265	1467-1
	SMC	FDC7265	1458-34
7266	Motorola	MC7266	878-72
7267	Motorola	MC7267	879-69
7268	Toshiba	TA7268	3318-147
7269	Toshiba	TA7269	3318-198
727	Fairchild	μA727M	3307-94
7270	**LSIComp**	**LS7270**	★**1099**
			1469-112
	Motorola	MC7270	881-87
			3854-38
	SGS	TDA7270	3324-21
			¶ 416-8
	Toshiba	TA7270	3318-176
7271	Motorola	MC7271	881-94
			3854-39
	Toshiba	TA7271	3318-177
7272	SGS	TDA7272	3400-104
72720	SEEQ	72720	1470-79
7280	**Intersil**	**ICM7280**	★**1091**
			2874-105
	Motorola	MC7280	860-104
	National	DM7280	860-108
7281	**Intersil**	**ICM7281**	★**1091**
			2874-79
	Motorola	MC7281	858-77
	National	DM7281	858-83
	NEC	μPD7281	844-68
			1439-13
7283	**Intersil**	**ICM7283**	★**1091**
			2874-106
	Toshiba	TA7283	3324-22
7291	National	DM7291	858-84
72C19	National	MM72C19	833-162
73	**Apex**	**PA73**	★**3525**
			3348-39
			3360-55
			3330-55
			3331-96
			3357-54
		PA73M	★**3525**
			3357-55
	Burr-Brown	**ADC73J**	★**3146**
			2847-7
		ADC73K	★**3146**
			2846-50
		DAC73J	★**3146**
			2871-43
		DAC73K	★**3146**
			2871-31
730	Signetics	TCA730A	3316-121
	Unitrode	PIC730	3397-35
7300	**NCR**	**NCR7300**	★**1672**
			1465-58
73000	**OKI**	**MSM73000**	★**4733**
			4453-21
7301	**NCR**	**NCR7301**	★**1672**
			1465-59
7302	Toshiba	TA7302	3321-148
7303	AMD	DP7303	2890-1
	National	DP7303	2890-9
	Toshiba	TA7303	3322-65
7304	AMD	DP7304B	2889-52
	National	DP7304	1457-102
		DP7304B	2890-10
7307	AMD	DP7307	2890-2
	National	DP7307	2890-11
7308	AMD	DP7308	2890-3
	National	DP7308	2890-12
731	**Burr-Brown**	**ADC731J**	★**3146**
			2847-6
		ADC731K	★**3146**
			2846-49
7310	National	DP7310	2898-131
	ThomsonCSF	EFB7310	2829-28
			3378-14
	Toshiba	TA7310	3375-71
73100	**S-MOS**	**SMM73100**	★**4178**
7311	National	DP7311	2898-132
7313	Toshiba	TA7313A	3318-87
7314	Toshiba	TA7314	3326-83
7315	Toshiba	TA7315B	3326-114
7316	Toshiba	TA7316	3384-3
7317	Toshiba	TA7317	3328-7
7318	Toshiba	TA7318	3328-5
732	AD	RTI-732	2035-38
	DataTrans	DT732	2035-10
7320	Goldstar	LL7320	4445-47
	LSILogic	**LL7320**	★**4676**
			4450-16
	Toshiba	TA7320	3398-88
7322	Toshiba	TA7322	3319-31
7324	Toshiba	TA7324	3316-150
7325	Toshiba	TA7325	3319-65
7326	Toshiba	TA7326	3383-57
7327	Toshiba	TA7327	3383-58
733	Fairchild	μA733C	3307-146
		μA733M	3307-147
	Intersil	μA733	3307-151
		μA733C	3307-152
	National	LM733	3307-157
	Signetics	**μA733**	★**3721**
			★**3729**
			3308-22
		μA733C	★**3721**
			★**3729**
			3308-23
	TI	**μA733M**	★ **720**
			3308-27
7330	Toshiba	TA7330	3324-32
7331	ThomsonCSF	EF7331	3381-98
	Toshiba	TA7331	3324-23
7332	ThomsonCSF	EF7332	3377-43
	Toshiba	TA7332	3328-6
7333	ThomsonCSF	EF7333	3377-157
	Toshiba	TA7333	3323-12
7335	Toshiba	TA7335	3321-131
7336	Toshiba	TA7336	3318-88
7341	Toshiba	TA7341	3321-86
7342	Toshiba	TA7342	3322-150
7344	Toshiba	TA7344	3322-161
7358	Toshiba	TA7358	3321-125
7359	Toshiba	TA7359	3319-66
736	**Burr-Brown**	**DAC736J**	★**3146**
			2871-42
		DAC736K	★**3146**
			2871-35
7362	Toshiba	TA7362	3316-151
738	SGS	M738	3320-143
738000	NEC	μPD738000	3853-69
739	Fairchild	μA739C	3319-41
			3367-45
7392	Fairchild	μA7392	¶ 420-17
		μA7392C	2895-142
74	Amperex	BGY74	3324-72
	Burr-Brown	**DAC74**	★**3147**
			2873-9
	Harris	**SN74XX Cell**	★**4659**
	Intel	**BPK74**	★**4071**
			2046-42
	MCE	MCE74	3372-11
	National	54/74HCXXX	¶ 355-3
		74HCTXXX	¶ 358-12
		MM74C Series	¶ 352-14
	Signetics	74FXX	¶ 359-6
		74LSXX	¶ 359-6
		74SXX	¶ 359-6
	TI	54/74ALS Series	¶ 360-18
		54/74SC	4481-31
	VTC	54/74ALS	¶ 354-5
		54/74LS	¶ 354-5
		54/74S	¶ 354-5
		V54/74ACT	¶ 353-3
			¶ 354-3
			¶ 354-5
			¶ 354-6
			¶ 354-7
			¶ 354-9
			¶ 355-8
			¶ 358-7
	Zytrex	ZX74HCT/LS00	825-83
		ZX74HCT/LS02	827-154
		ZX74HCT/LS04	811-55
		ZX74HCT/LS08	824-82
		ZX74HCT/LS107	823-157
		ZX74HCT/LS112	823-99
		ZX74HCT/LS113	823-69
		ZX74HCT/LS138	818-74
		ZX74HCT/LS139	817-158
		ZX74HCT/LS157	832-95
		ZX74HCT/LS158	832-129
		ZX74HCT/LS160	815-8
		ZX74HCT/LS161	812-18
		ZX74HCT/LS162	814-142
		ZX74HCT/LS163	811-155
		ZX74HCT/LS164	836-64
		ZX74HCT/LS165	836-20
		ZX74HCT/LS210	839-131
		ZX74HCT/LS238	818-75
		ZX74HCT/LS239	817-159
		ZX74HCT/LS240	839-132
		ZX74HCT/LS241	840-36
		ZX74HCT/LS244	840-37
		ZX74HCT/LS245	841-183
		ZX74HCT/LS257	832-160
		ZX74HCT/LS258	832-185
		ZX74HCT/LS259	831-10
		ZX74HCT/LS273	821-93
		ZX74HCT/LS32	826-155
		ZX74HCT/LS365	809-165
		ZX74HCT/LS366	810-35
		ZX74HCT/LS367	809-166
		ZX74HCT/LS368	810-36
		ZX74HCT/LS373	830-16
		ZX74HCT/LS374	822-149
		ZX74HCT/LS390	815-162
		ZX74HCT/LS393	812-192
		ZX74HCT/LS533	830-127
			(Continued)
74	Zytrex	ZX74HCT/LS564	822-27
		ZX74HCT/LS573	830-17
		ZX74HCT/LS574	822-150
		ZX74HCT/LS640	841-99
		ZX74HCT/LS643	842-16
		ZX74HCT/LS646	841-5
		ZX74HCT/LS648	840-145
		ZX74HCT/LS73	823-158
		ZX74HCT/LS74	820-50
		ZX74HCT/LS76	823-34
740	Intersil	μA740	3357-152
		μA740C	3357-180
	SGS	M740	3320-144
	Signetics	TCA740A	3316-122
	Unitrode	PIC740	3397-36
7400	Fairchild	7400	870-184
	Motorola	MC7400	870-185
	National	DM7400	870-187
			¶ 396-12
	Signetics	**7400**	★**1156**
			870-190
	TI	SN7400	870-192
74000	**OKI**	**MSM74000**	★**4733**
			4453-22
7401	Fairchild	7401	871-135
	Goldstar	**GL7401**	★**3580**
			2895-116
	Motorola	MC7401	871-137
	National	DM7401	871-141
	TI	SN7401	871-148
	Toshiba	TA7401A	3322-151
7402	Fairchild	7402	865-90
	Motorola	MC7402	865-91
	National	DM7402	865-93
	Signetics	**7402**	★**1156**
			865-96
	TI	SN7402	865-100
	Toshiba	TA7402	3321-53
7403	Fairchild	7403	871-136
	Motorola	MC7403	871-138
	National	DM7403	871-142
	Signetics	**7403**	★**1156**
			871-144
	TI	SN7403	871-149
7404	Fairchild	7404	857-76
	Motorola	MC7404	857-77
	National	DM7404	857-79
	Signetics	**7404**	★**1156**
			857-81
	TI	SN7404	857-86
7405	Fairchild	7405	857-138
	Motorola	MC7405	857-139
	National	DM7405	857-141
	Signetics	**7405**	★**1156**
			857-143
	TI	SN7405	857-146
	Toshiba	TA7405	3324-26
7406	Fairchild	7406	864-107
	Motorola	MC7406	864-108
	National	DM7406	864-110
	Signetics	**7406**	★**1156**
			864-112
	TI	SN7406	864-114
7407	Fairchild	7407	864-87
	Motorola	MC7407	864-88
	National	DM7407	864-90
	Signetics	**7407**	★**1156**
			864-92
	TI	SN7407	864-94
7408	Fairchild	7408	869-72
	Motorola	MC7408	869-73
	National	DM7408	869-75
	Signetics	**7408**	★**1156**
			869-77
	TI	SN7408	869-79
7409	Fairchild	7409	869-133
	Motorola	MC7409	869-134
	National	DM7409	869-136
	TI	SN7409	869-138
741	AD	741	¶ 391-17
		AD741	★**3507**
			3330-21
			3353-41
		AD741C	★**3507**
			3355-25
		AD741J	★**3507**
			(Continued)

Arranged alphanumerically from left to right.

PART NUMBER INDEX

Base Number	Source	Device	Page-Line
741	AD	AD741J	3346-220
		AD741K	★**3507**
			3346-120
		AD741L	★**3507**
			3343-18
		AD741S	★**3507**
			3346-106
	Fairchild	μA741AM	3343-41
		μA741C	3355-27
		μA741EC	3343-40
		μA741M	3353-42
	Harris	LM741	¶ 407-4
	National	LM741	3330-24
			3353-44
		LM741A	3346-216
		LM741C	3355-30
		LM741E	3346-217
	NEC	μPC741	3330-25
			3355-31
	PMI	PM-741	3353-45
		PM-741C	3355-32
	Raytheon	RC741	3330-26
			3355-33
		RM741	3353-46
	RCA	**CA741**	★**3672**
			3330-27
		CA741C	★**3672**
			3355-34
	Samsung	**LM741C**	★**3679**
			3355-22
	SGS	LM741	3353-34
		LM741C	3355-19
		LM741E	3346-215
		M741	3320-145
	Signetics	**SA741C**	★**3729**
			3355-46
		μA741	★**3721**
			3330-28
			3353-47
		μA741C	★**3721**
			3355-35
	SiliconG	SG741	3330-29
			3353-48
		SG741C	3355-36
	TeledyneP	741	¶ 404-13
	TI	**μA741M**	★ **718**
			3353-49
	ThomsonCSF	μA741	3330-30
		μA741C	3355-23
		μA741M	3353-36
7410	Fairchild	7410	870-108
	Motorola	MC7410	870-111
	National	DM7410	870-113
	Signetics	**7410**	★**1156**
			870-115
	TI	SN7410	870-117
74100	Motorola	MC74100	875-4
	TI	SN74100	875-6
74104	TI	SN74104	862-3
74105	TI	SN74105	862-4
74107	Fairchild	74107	867-153
	Motorola	MC74107	867-155
	National	DM74107	867-159
	Signetics	**74107**	★**1156**
			867-163
	TI	SN74107	867-167
74109	National	DM74109	867-105
	Signetics	**74109**	★**1156**
			867-107
	TI	SN74109	867-109
7411	Fairchild	7411	868-177
	National	DM7411	869-1
	Signetics	**7411**	★**1156**
			869-2
74110	TI	SN74110	867-80
74111	TI	SN74111	868-21
74116	**Signetics**	**74116**	★**1156**
			875-29
	TI	SN74116	875-31
7412	Fairchild	7412	870-165
	TI	SN7412	870-167
74120	Motorola	MC74120	887-89
	TI	SN74120	887-91
74121	Fairchild	74121	880-94
	Motorola	MC74121	880-95
	National	DM74121	880-97
			(Continued)
74121	**Signetics**	**74121**	★**1157**
			880-99
	TI	SN74121	880-101
74122	Fairchild	74122	880-112
	Motorola	MC74122	880-113
	TI	SN74122	880-115
74123	Fairchild	74123	880-142
	Motorola	MC74123	880-143
	National	DM74123	880-145
	Signetics	**74123**	★**1157**
			880-147
	TI	SN74123	880-149
74125	Fairchild	74125	856-90
	National	DM74125	856-93
	Signetics	**74125**	★**1157**
			856-96
	TI	SN74125	856-98
74126	Fairchild	74126	856-117
	Signetics	**74126**	★**1157**
			856-121
	TI	SN74126	856-123
74128	**Signetics**	**74128**	★**1157**
			864-67
			2884-3
	TI	SN74128	864-68
			2884-4
7413	Fairchild	7413	887-99
	Motorola	MC7413	887-100
	National	DM7413	887-102
	Signetics	**7413**	★**1156**
			887-104
	TI	SN7413	887-106
74132	Fairchild	74132	887-145
	Motorola	MC74132	887-146
	National	DM74132	887-148
	Signetics	**74132**	★**1157**
			887-150
	TI	SN74132	887-152
74136	Motorola	MC74136	874-63
	TI	SN74136	874-66
7414	Fairchild	7414	888-23
	Motorola	MC7414	888-24
	National	DM7414	888-26
	Signetics	**7414**	★**1156**
			888-28
	TI	SN7414	888-30
74141	Fairchild	74141	2876-28
	Motorola	MC74141	2876-30
	National	DM74141	2876-32
	TI	SN74141	2876-33
74142	TI	SN74142	862-44
74143	TI	SN74143	862-45
74144	TI	SN74144	862-47
74145	Fairchild	74145	862-98
	Motorola	MC74145	862-99
	National	DM74145	862-101
	Signetics	**74145**	★**1157**
			862-103
	TI	SN74145	862-104
74147	**Signetics**	**74147**	★**1157**
			889-46
	TI	SN74147	889-48
74148	National	DM74148	888-144
	Signetics	**74148**	★**1157**
			888-148
	TI	SN74148	888-150
74150	Fairchild	74150	880-76
	Motorola	MC74150	880-77
	National	DM74150	880-79
	Signetics	**74150**	★**1157**
			880-81
	TI	SN74150	880-83
74151	Fairchild	74151	879-154
	Motorola	MC74151	879-155
	National	DM74151A	879-157
	Signetics	**74151**	★**1157**
			879-159
	TI	SN74151A	879-161
74152	Motorola	MC74152	880-19
74153	Fairchild	74153	877-117
	Motorola	MC74153	877-120
	National	DM74153	877-122
	Signetics	**74153**	★**1157**
			877-124
	TI	SN74153	877-126
74154	Motorola	MC74154	863-169
	National	DM74154	863-173
	Signetics	**74154**	★**1157**
			863-177
	TI	SN74154	863-178
74155	Fairchild	74155	863-70
	Motorola	MC74155	863-71
	National	DM74155	863-73
	Signetics	**74155**	★**1157**
			863-75
	TI	SN74155	863-77
74156	Fairchild	74156	863-39
	Motorola	MC74156	863-40
	National	DM74156	863-42
	Signetics	**74156**	★**1157**
			863-44
	TI	SN74156	863-46
74157	Fairchild	74157	878-158
	Motorola	MC74157	878-161
	National	DM74157	878-165
	Signetics	**74157**	★**1157**
			878-171
	TI	SN74157	878-175
74158	**Signetics**	**74158**	★**1157**
			878-79
74159	TI	SN74159	864-4
7416	Fairchild	7416	864-96
	Motorola	MC7416	864-97
	National	DM7416	864-99
	Signetics	**7416**	★**1156**
			864-103
	TI	SN7416	864-105
74160	Fairchild	74160	860-134
	Motorola	MC74160	860-137
	National	DM74160A	860-141
	Signetics	**74160**	★**1157**
			860-145
	TI	SN74160	860-148
			¶ 357-2
74161	Fairchild	74161	858-120
	Motorola	MC74161	858-123
	National	DM74161A	858-127
	Signetics	**74161**	★**1157**
			858-131
	TI	SN74161	858-134
			¶ 357-2
74162	Fairchild	74162	860-180
	Motorola	MC74162	860-181
	National	DM74162A	860-183
	TI	SN74162	860-185
			¶ 357-2
74163	Fairchild	74163	858-173
	Motorola	MC74163A	858-174
	National	DM74163	858-176
	Signetics	**74163**	★**1157**
			858-178
	TI	SN74163	858-180
			¶ 357-2
74164	Fairchild	74164	881-167
			3856-41
	National	DM74164	881-169
			3856-50
	Signetics	**74164**	★**1157**
			881-173
			3856-58
	TI	SN74164	881-174
			3856-60
74165	Fairchild	74165	882-44
			3855-111
	Motorola	MC74165	882-45
			3855-112
	National	DM74165	882-47
			3855-114
	Signetics	**74165**	★**1157**
			882-49
			3855-116
	TI	SN74165	882-50
			3855-117
74166	Fairchild	74166	882-62
			3855-120
	National	DM74166	882-64
			3856-7
	Signetics	**74166**	★**1157**
			882-66
			3856-10
			(Continued)
74166	TI	SN74166	882-67
			3856-11
74167	Fairchild	74167	887-68
	Motorola	MC74167	887-69
	TI	SN74167	887-71
7417	Fairchild	7417	864-78
	Motorola	MC7417	864-79
	National	DM7417	864-81
	Signetics	**7417**	★**1156**
			864-83
	TI	SN7417	864-85
74170	Fairchild	74170	876-154
			3830-80
	National	DM74170	876-155
			3830-86
	Signetics	**74170**	★**1157**
			877-2
	TI	SN74170	877-3
			3830-91
74172	TI	SN74172	877-30
			3830-114
74173	Fairchild	74173	866-2
	National	DM74173	866-4
	Signetics	**74173**	★**1157**
			866-8
	TI	SN74173	866-12
74174	Fairchild	74174	866-25
	Motorola	MC74174	866-27
	National	DM74174	866-29
	Signetics	**74174**	★**1157**
			866-31
	TI	SN74174	866-33
74175	Fairchild	74175	864-261
	Motorola	MC74175	864-262
	National	DM74175	864-264
	Signetics	**74175**	★**1157**
			864-266
	TI	SN74175	864-268
74176	Fairchild	74176	860-102
	Motorola	MC74176	860-105
	National	DM74176	860-109
	TI	SN74176	860-118
74177	Fairchild	74177	858-75
	Motorola	MC74177	858-78
	National	DM74177	858-85
	TI	SN74177	858-96
74178	Fairchild	74178	3854-50
	TI	SN74178	881-91
			3854-66
74179	Fairchild	74179	881-93
			3854-51
	TI	SN74179	881-100
			3854-67
74180	Fairchild	74180	889-2
	Motorola	MC74180	889-3
	National	DM74180	889-5
	Signetics	**74180**	★**1157**
			889-9
	TI	SN74180	889-13
74181	Motorola	MC74181	855-21
	Signetics	**74181**	★**1157**
			855-24
	TI	SN74181	855-26
74182	Motorola	MC74182	855-86
	TI	SN74182	855-88
			¶ 441-18
74184	National	DM74184	887-85
	TI	SN74184	887-87
			3808-30
74185	National	DM74185A	887-80
	TI	SN74185A	887-83
			3808-27
74190	Fairchild	74190	861-151
	Motorola	MC74190	861-152
	Signetics	**74190**	★**1157**
			861-155
	TI	SN74190	861-157
74191	Fairchild	74191	859-158
	Motorola	MC74191	859-159
	National	DM74191	859-161
	Signetics	**74191**	★**1157**
			859-163
	TI	SN74191	859-165
74192	Fairchild	74192	861-116
	Motorola	MC74192	861-117
	National	DM74192	861-119
			(Continued)

¶ Indicates page number in Application Note Directory.
★ Indicates additional data is provided on the page noted.

Base Number	Source	Device	Page-Line
74192	**Signetics**	**74192**	**★1157**
			861-123
	TI	SN74192	861-125
74193	Fairchild	74193	860-16
	Motorola	MC74193	860-17
	National	DM74193	860-19
	Signetics	**74193**	**★1157**
			860-23
	TI	SN74193	860-25
74194	Fairchild	74194	881-120
			3854-52
	Motorola	MC74194	881-121
			3854-56
	National	DM74194	881-123
			3854-59
	Signetics	**74194**	**★1157**
			881-125
			3854-63
	TI	SN74194	881-126
			3854-68
74195	Fairchild	74195	881-24
			3854-78
	Motorola	MC74195	881-27
			3854-87
	National	DM74195	881-31
			3854-99
	Signetics	**74195**	**★1157**
			881-35
			3854-106
	TI	SN74195	881-36
			3854-108
74196	Fairchild	74196	860-103
	Motorola	MC74196	860-106
	TI	SN74196	860-119
74197	Fairchild	74197	858-76
	Motorola	MC74197	858-79
	National	DM74197	858-86
	TI	SN74197	858-97
74198	Fairchild	74198	882-26
			3855-78
	National	DM74198	882-28
			3855-82
	TI	SN74198	882-29
			3855-85
74199	Fairchild	74199	882-32
			3855-79
	National	DM74199	3855-83
	Signetics	**74199**	**★1157**
			882-34
			3855-84
	TI	SN74199	882-35
			3855-86
7420	Fairchild	7420	869-168
	Goldstar	LL7420	4446-2
	LSILogic	**LL7420**	**★4676**
			4450-21
	Motorola	MC7420	869-169
	National	DM7420	869-171
	Signetics	**7420**	**★1156**
			869-173
	TI	SN7420	869-175
7421	Fairchild	7421	868-140
	Signetics	**7421**	**★1156**
			868-142
7422	Fairchild	7422	870-80
	TI	SN7422	870-82
74221	**Signetics**	**74221**	**★1157**
			880-127
	TI	SN74221	880-129
7423	Fairchild	7423	865-13
	Motorola	MC7423	865-14
	TI	SN7423	865-16
74246	TI	SN74246	2875-140
74247	TI	SN74247	2875-127
74248	TI	SN74248	2875-87
74249	TI	SN74249	2875-56
7425	Fairchild	7425	865-4
	Intel	7425	2892-15
	Motorola	MC7425	865-5
	National	DM7425	865-7
	Signetics	**7425**	**★1156**
			865-9
	TI	SN7425	865-11
74251	National	DM74251	880-36
	TI	SN74251	880-38
74259	National	DM74259	875-128
	TI	SN74259	875-134
7426	Fairchild	7426	864-34
	Motorola	MC7426	864-35
	National	DM7426	864-37
	Signetics	**7426**	**★1156**
			864-43
	TI	SN7426	864-45
74265	TI	SN74265	887-141
7427	Fairchild	7427	865-35
	Motorola	MC7427	865-36
	National	DM7427	865-38
	Signetics	**7427**	**★1156**
			865-40
	TI	SN7427	865-42
74273	TI	SN74273	866-140
74276	TI	SN74276	868-138
74278	TI	SN74278	888-100
74279	Fairchild	74279	875-74
			¶ 445-5
	Signetics	**74279**	**★1158**
			875-76
	TI	SN74279	875-78
7428	**Signetics**	**7428**	**★1156**
			865-97
	TI	SN7428	865-101
74283	Fairchild	74283	856-21
	TI	SN74283	856-30
			¶ 441-18
74284	TI	SN74284	855-142
			¶ 441-18
74285	TI	SN74285	855-134
			¶ 441-18
74290	Fairchild	74290	860-59
	Motorola	MC74290	860-61
	TI	SN74290	860-69
74293	Fairchild	74293	859-46
	Motorola	MC74293	859-50
	TI	SN74293	859-58
74298	Fairchild	74298	879-76
	Motorola	MC74298	879-77
	Signetics	**74298**	**★1158**
			879-79
	TI	SN74298	879-81
7430	Fairchild	7430	872-2
	Motorola	MC7430	872-3
	National	DM7430	872-5
	Signetics	**7430**	**★1156**
			872-7
	TI	SN7430	872-9
7432	Burr-Brown	MP7432	2034-4
		MP7432-A0	2034-3
	Fairchild	7432	873-23
	National	DM7432	873-25
	Signetics	**7432**	**★1156**
			873-27
	TI	SN7432	873-29
7433	**Signetics**	**7433**	**★1156**
			865-69
	TI	SN7433	865-71
74351	TI	SN74351	878-71
74365	National	DM74365	857-187
	Signetics	**74365**	**★1158**
			856-164
	TI	SN74365A	856-168
74366	National	DM74366	856-158
			864-130
	Signetics	**74366**	**★1158**
			858-2
			864-121
	TI	SN74366A	858-6
74367	National	DM74367	856-159
			864-131
	Signetics	**74367**	**★1158**
			856-165
			864-122
	TI	SN74367A	856-169
			864-136
74368	National	DM74368	857-188
	Signetics	**74368**	**★1158**
			858-3
	TI	SN74368A	858-7
7437	Fairchild	7437	871-48
	Motorola	MC7437	871-49
	National	DM7437	871-51
	Signetics	**7437**	**★1156**
			(Continued)
7437	Signetics	7437	871-53
	TI	SN7437	871-55
74376	TI	SN74376	868-137
7438	Fairchild	7438	871-83
	Motorola	MC7438	871-85
	National	DM7438	871-87
	Signetics	**7438**	**★1156**
			871-90
	TI	SN7438	871-93
7439	Fairchild	7439	871-84
	Signetics	**7439**	**★1156**
			871-91
	TI	SN7439	871-94
74390	TI	SN74390	861-30
74393	TI	SN74393	859-26
7440	Fairchild	7440	870-36
	Motorola	MC7440	870-37
	National	DM7440	870-39
	Signetics	**7440**	**★1156**
			870-41
	TI	SN7440	870-43
74408	Motorola	MC74408	888-125
7441	Fairchild	7441	2876-22
	National	DM7441A	2876-24
7442	Fairchild	7442	862-114
	Motorola	MC7442	862-119
	National	DM7442	862-123
	Signetics	**7442**	**★1156**
			862-129
	TI	SN7442A	862-131
74425	TI	SN74425	856-99
74426	TI	SN74426	856-124
7443	Fairchild	7443	862-67
	Motorola	MC7443	862-68
	TI	SN7443A	862-69
7444	Motorola	MC7444	862-64
	TI	SN7444A	862-65
7445	Fairchild	7445	862-89
	Motorola	MC7445	862-90
	National	DM7445	862-92
	Signetics	**7445**	**★1156**
			862-94
	TI	SN7445	862-96
74452	Motorola	MC74452	861-59
74453	Motorola	MC74453	859-24
74454	Motorola	MC74454	862-1
74455	Motorola	MC74455	860-57
74456	Motorola	MC74456	854-4
7446	Fairchild	7446	2875-132
	Motorola	MC7446	2875-135
	National	DM7446A	2875-137
			¶ 398-1
	TI	SN7446A	2875-141
74460	Motorola	MC74460	886-150
74468	Motorola	MC74468	886-128
			2899-13
7447	Fairchild	7447	2875-103
	Motorola	MC7447	2875-110
	National	DM7447A	2875-118
			¶ 398-1
	TI	SN7447A	2875-128
7448	Fairchild	7448	2875-62
	Motorola	MC7448	2875-69
	National	DM7448	2875-79
	TI	SN7448	2875-88
7449	Motorola	MC7449	2875-45
74490	TI	SN74490	861-31
7450	Fairchild	7450	872-116
	Motorola	MC7450	872-117
	National	DM7450	872-119
	Signetics	**7450**	**★1156**
			872-121
	TI	SN7450	872-123
7451	Fairchild	7451	872-76
	Motorola	MC7451	872-77
	National	DM7451	872-79
	SGS	LS7451	872-100
	Signetics	**7451**	**★1156**
			872-81
	TI	SN7451	872-83
7453	Fairchild	7453	872-163
	Motorola	MC7453	872-164
	National	DM7453	872-166
	TI	SN7453	872-168
7454	Fairchild	7454	872-156
	Motorola	MC7454	872-157
			(Continued)
7454	National	DM7454	872-159
	TI	SN7454	872-161
7460	Fairchild	7460	872-130
	Motorola	MC7460	872-131
	TI	SN7460	872-133
747	Fairchild	μA747AM	3363-55
		μA747C	3367-8
		μA747EC	3363-56
		μA747M	3366-10
	National	LM747	3366-14
		LM747A	3363-57
		LM747C	3367-13
		LM747E	3363-58
	PMI	PM-747	3366-15
	Raytheon	RC747	3367-18
		RM747	3366-17
	RCA	**CA747**	**★3672**
			3366-19
		CA747C	**★3672**
			3367-19
	SGS	M747	3320-146
	Signetics	**SA747C**	**★3729**
			3367-41
		μA747	**★3721**
			3366-22
		μA747C	**★3721**
			3367-21
	TI	**μA747M**	**★ 718**
			3366-24
7470	Fairchild	7470	867-73
	Motorola	MC7470	867-74
	National	DM7470	867-76
	TI	SN7470	867-79
7472	Fairchild	7472	867-82
	Motorola	MC7472	867-83
	National	DM7472	867-85
	TI	SN7472	867-87
7473	Fairchild	7473	867-154
	Motorola	MC7473	867-156
	National	DM7473	867-160
	Signetics	**7473**	**★1156**
			867-164
	TI	SN7473	867-168
7474	Fairchild	7474	864-208
	Motorola	MC7474	864-209
	National	DM7474	864-211
	Signetics	**7474**	**★1156**
			864-213
	TI	SN7474	864-215
7475	Fairchild	7475	875-33
	Motorola	MC7475	875-34
	National	DM7475	875-36
	Signetics	**7475**	**★1156**
			875-38
	TI	SN7475	875-40
7476	Fairchild	7476	868-23
	Motorola	MC7476	868-24
	National	DM7476	868-26
	Signetics	**7476**	**★1156**
			868-28
	TI	SN7476	868-30
7477	Motorola	MC7477	875-62
748	Fairchild	μA748C	3355-37
	Intersil	μA748C	3355-38
	National	LM748	3354-2
		LM748C	3354-3
	RCA	**CA748**	**★3672**
			3354-4
		CA748C	**★3672**
			3355-40
	SGS	LM748	3353-35
		LM748C	3355-20
	ThomsonCSF	LM748C	3355-24
		LM748M	3353-37
7480	Motorola	MC7480	854-161
	TI	SN7480	854-162
7482	Fairchild	7482	855-9
	Motorola	MC7482	855-10
	TI	SN7482	855-12
7483	Fairchild	7483	856-22
	Motorola	MC7483	856-23
	National	DM7483	856-25
			¶ 352-9
	Signetics	**7483**	**★1156**
			856-27
	TI	SN7483A	856-31

Arranged alphanumerically from left to right.

PART NUMBER INDEX

Base Number	Source	Device	Page-Line
7485	Fairchild	7485	854-45
	Motorola	MC7485	854-51
	National	DM7485	854-58
	Signetics	**7485**	★ **1156**
			854-65
	TI	SN7485	854-70
7486	Fairchild	7486	874-89
	Motorola	MC7486	874-91
	National	DM7486	874-94
	Signetics	**7486**	★ **1156**
			874-99
	TI	SN7486	874-101
7488	Ziatech	ZT 7488/08	2040-29
		ZT 7488/28	2039-17
7489	AMD	SN7489	3831-67
		SN7489-1	3831-45
	National	DM7489B	877-44
	TI	SN7489	877-47
			3831-108
749	Fairchild	μA749C	3363-68
7490	Fairchild	7490	860-60
	Motorola	MC7490	860-62
	National	DM7490	860-64
			¶ 361-1
	Signetics	**7490**	★ **1156**
			860-66
	TI	SN7490A	860-70
7491	Fairchild	7491	882-101
			3856-68
	Motorola	MC7491	882-102
		MC7491A	3856-70
	National	SN7491A	3856-72
	Signetics	**7491**	★ **1156**
			3856-74
	TI	SN7491A	882-104
			3856-75
7492	Fairchild	7492	862-7
	Motorola	MC7492	862-8
	National	DM7492A	862-10
	Signetics	**7492**	★ **1156**
			862-12
	TI	SN7492A	862-14
7493	Fairchild	7493	859-47
	Motorola	MC7493	859-51
	National	DM7493A	859-53
	Signetics	**7493**	★ **1156**
			859-55
	TI	SN7493A	859-59
7494	Fairchild	7494	881-115
			3855-25
	Motorola	MC7494	881-116
			3855-26
	Signetics	**7494**	★ **1156**
			881-117
			3855-28
	TI	SN7494	881-118
			3855-29
7495	Fairchild	7495	881-63
			3854-53
	Motorola	MC7495A	881-66
			3854-112
	National	DM7495	881-68
			3854-60
	Signetics	**7495A**	★ **1156**
			3854-64
	TI	SN7495A	881-70
			3854-69
7496	Fairchild	7496	881-152
			3855-44
	Motorola	MC7496	881-153
			3855-45
	National	DM7496	881-155
			3855-47
	Signetics	**7496**	★ **1156**
			881-157
			3855-50
	TI	SN7496	881-158
			3855-52
7497	Fairchild	7497	888-110
	Motorola	MC7497	888-111
	TI	SN7497	888-113
74AC00	**Fairchild**	**74AC00**	★ **1011**
			★ **1013**
			825-45
74AC02	**Fairchild**	**74AC02**	★ **1011**
			★ **1013**
			827-114
74AC04	**Fairchild**	**74AC04**	★ **1011**
			★ **1013**
			810-177
74AC08	**Fairchild**	**74AC08**	★ **1011**
			★ **1013**
			824-48
74AC10	**Fairchild**	**74AC10**	★ **1011**
			★ **1013**
			824-173
74AC1010			
	Fairchild	**74AC1010**	★ **1012**
			★ **1016**
			807-82
74AC1016			
	Fairchild	**74AC1016**	★ **1012**
			★ **1016**
			807-128
74AC1017			
	Fairchild	**74AC1017**	★ **1012**
			★ **1016**
			807-132
74AC109			
	Fairchild	**74AC109**	★ **1011**
			★ **1013**
			822-172
74AC11	**Fairchild**	**74AC11**	★ **1011**
			★ **1013**
			823-194
74AC138			
	Fairchild	**74AC138**	★ **1011**
			★ **1015**
			817-179
74AC139			
	Fairchild	**74AC139**	★ **1011**
			★ **1015**
			817-91
74AC14	**Fairchild**	**74AC14**	★ **1011**
			★ **1013**
			839-11
74AC151			
	Fairchild	**74AC151**	★ **1011**
			★ **1015**
			833-25
74AC153			
	Fairchild	**74AC153**	★ **1011**
			★ **1015**
			831-138
74AC157			
	Fairchild	**74AC157**	★ **1015**
			832-57
74AC158			
	Fairchild	**74AC158**	★ **1011**
			★ **1015**
			832-99
74AC160			
	Fairchild	**74AC160**	★ **1011**
			★ **1014**
			814-162
74AC161			
	Fairchild	**74AC161**	★ **1011**
			★ **1014**
			811-173
74AC163			
	Fairchild	**74AC163**	★ **1011**
			★ **1014**
			811-117
74AC169			
	Fairchild	**74AC169**	★ **1011**
			★ **1014**
74AC174			
	Fairchild	**74AC174**	★ **1011**
			★ **1013**
			820-177
74AC175			
	Fairchild	**74AC175**	★ **1011**
			★ **1013**
			820-85
74AC191			
	Fairchild	**74AC191**	★ **1011**
			★ **1014**
			812-37
74AC20	**Fairchild**	**74AC20**	★ **1011**
			★ **1013**
			824-115
74AC240			
	Fairchild	**74AC240**	★ **1011**
			★ **1014**
			839-57
74AC241			
	Fairchild	**74AC241**	★ **1011**
			★ **1014**
			839-140
74AC244			
	Fairchild	**74AC244**	★ **1011**
			★ **1014**
			840-61
74AC245			
	Fairchild	**74AC245**	★ **1011**
			★ **1015**
			841-101
74AC251			
	Fairchild	**74AC251**	★ **1011**
			★ **1015**
			833-103
74AC253			
	Fairchild	**74AC253**	★ **1011**
			★ **1015**
			832-34
74AC257			
	Fairchild	**74AC257**	★ **1011**
			★ **1015**
			832-133
74AC258			
	Fairchild	**74AC258**	★ **1011**
			★ **1015**
			832-166
74AC273			
	Fairchild	**74AC273**	★ **1011**
			★ **1013**
			821-51
74AC293			
	Fairchild	**74AC293**	★ **1011**
74AC299			
	Fairchild	**74AC299**	★ **1014**
			836-142
74AC32	**Fairchild**	**74AC32**	★ **1011**
			★ **1013**
			826-124
74AC323			
	Fairchild	**74AC323**	★ **1011**
			★ **1014**
74AC373			
	Fairchild	**74AC373**	★ **1012**
			★ **1013**
			829-101
74AC374			
	Fairchild	**74AC374**	★ **1012**
			★ **1013**
			822-36
74AC377			
	Fairchild	**74AC377**	★ **1012**
			★ **1013**
74AC378			
	Fairchild	**74AC378**	★ **1013**
74AC379			
	Fairchild	**74AC379**	★ **1012**
			★ **1013**
74AC520			
	Fairchild	**74AC520**	★ **1012**
			★ **1015**
			806-148
74AC521			
	Fairchild	**74AC521**	★ **1012**
			★ **1015**
			806-125
74AC540			
	Fairchild	**74AC540**	★ **1012**
			★ **1014**
			810-46
74AC541			
	Fairchild	**74AC541**	★ **1012**
			★ **1014**
			810-47
74AC563			
	Fairchild	**74AC563**	★ **1012**
			★ **1013**
			830-28
74AC564			
	Fairchild	**74AC564**	★ **1012**
			★ **1013**
			821-126
74AC569			
	Fairchild	**74AC569**	★ **1012**
			★ **1014**
74AC573			
	Fairchild	**74AC573**	★ **1012**
			★ **1013**
			829-102
74AC574			
	Fairchild	**74AC574**	★ **1012**
			★ **1013**
			822-37
74AC646			
	Fairchild	**74AC646**	★ **1012**
			★ **1015**
			840-147
74AC648			
	Fairchild	**74AC648**	★ **1012**
			★ **1015**
			840-100
74AC708			
	Fairchild	**74AC708**	★ **1012**
			★ **1016**
74AC74	**Fairchild**	**74AC74**	★ **1011**
			★ **1013**
			820-13
74AC86	**Fairchild**	**74AC86**	★ **1011**
			★ **1013**
			828-20
74ACT1010			
	Fairchild	**74ACT1010**	★ **1012**
			★ **1016**
			807-84
74ACT1016			
	Fairchild	**74ACT1016**	★ **1012**
			★ **1016**
			807-130
74ACT1017			
	Fairchild	**74ACT1017**	★ **1012**
			★ **1016**
			807-134
74ACT138			
	Fairchild	**74ACT138**	★ **1012**
			★ **1015**
			817-181
74ACT240			
	Fairchild	**74ACT240**	★ **1012**
			★ **1014**
			839-59
	VTC	**V74ACT240**	★ **1367**
			★ **1370**
			839-62
74ACT241			
	Fairchild	**74ACT241**	★ **1012**
			★ **1014**
			839-142
	VTC	**V74ACT241**	★ **1367**
			★ **1370**
			840-48
74ACT244			
	Fairchild	**74ACT244**	★ **1012**
			★ **1014**
			840-63
	Samsung	**KS74ACT244**	★ **113**
			★ **1153**
	VTC	**V74ACT244**	★ **1367**
			★ **1370**
			840-89
74ACT245			
	Fairchild	**74ACT245**	★ **1012**
			★ **1015**
			841-103
	VTC	**V74ACT245**	★ **1367**
			★ **1368**
			★ **1371**
			841-106
74ACT373			
	Fairchild	**74ACT373**	★ **1012**
			★ **1013**
			829-105
	VTC	**V74ACT373**	★ **1367**
			★ **1372**
			829-109
74ACT374			
	Fairchild	**74ACT374**	★ **1012**
			★ **1013**
			822-40
	VTC	**V74ACT374**	★ **1367**

(Continued)

¶ Indicates page number in Application Note Directory.
★ Indicates additional data is provided on the page noted.

Base Number	Source	Device	Page-Line
74ACT374	**VTC**	**V74ACT374**	**★1372** 822-45
74ACT465	**VTC**	**V74ACT465**	**★1367** **★1370** 810-51
74ACT466	**VTC**	**V74ACT466**	**★1367** **★1370** 811-105 811-106
74ACT467	**VTC**	**V74ACT467**	**★1367** **★1370** 810-52
74ACT468	**VTC**	**V74ACT468**	**★1367** **★1370** 811-107 811-110
74ACT533	**VTC**	**V74ACT533**	**★1367** **★1372** 830-34
74ACT534	**VTC**	**V74ACT534**	**★1367** **★1373** 821-133
74ACT540	**VTC**	**V74ACT540**	**★1367** **★1370** 839-63
74ACT541	**VTC**	**V74ACT541**	**★1367** **★1370** 810-53
74ACT547	MMI	74ACT547	829-94
74ACT563	**Fairchild**	**74ACT563**	**★1012** **★1013** 830-30
	VTC	**V74ACT563**	**★1367** **★1372** 830-35
74ACT564	**Fairchild**	**74ACT564**	**★1012** **★1013** 821-128
	VTC	**V74ACT564**	**★1373** 821-134
74ACT567	MMI	74ACT567	829-95
74ACT573	**Fairchild**	**74ACT573**	**★1012** **★1013** 829-106
	VTC	**V74ACT573**	**★1367** **★1372** 829-110
74ACT574	**Fairchild**	**74ACT574**	**★1012** **★1013** 822-41
	VTC	**V74ACT574**	**★1367** **★1373** 822-46
74ACT575	**VTC**	**V74ACT575**	**★1367** **★1373** 822-161
74ACT576	**VTC**	**V74ACT576**	**★1367** **★1373** 821-135
74ACT577	**VTC**	**V74ACT577**	**★1367** **★1373** 822-33
74ACT580	**VTC**	**V74ACT580**	**★1367** **★1372** 830-36
74ACT620	**VTC**	**V74ACT620**	**★1367** **★1371** 841-28
74ACT623	**VTC**	**V74ACT623**	**★1367** **★1371** 841-29
74ACT640	**VTC**	**V74ACT640**	**★1367** **★1371** 841-65
74ACT643	**VTC**	**V74ACT643**	**★1367** **★1371** 841-66
74ACT645	**VTC**	**V74ACT645**	**★1367** **★1371** 841-107
74ACT646	**MMI**	**74ACT646**	**★1107** 840-178
74ACT648	**MMI**	**74ACT648**	**★1107** **★1112** 840-103
74ACT651	**MMI**	**74ACT651**	**★1107** **★1113** 840-104
74ACT652	**MMI**	**74ACT652**	**★1107** **★1113** 840-150
74ACT708	**Fairchild**	**74ACT708**	**★1012** **★1016**
74ACT793	MMI	74ACT793	829-96
74ACT794	MMI	74ACT794	842-30
74ACT821	**VTC**	**V74ACT821**	**★1367** **★1373** **★1374** 842-101
74ACT822	**VTC**	**V74ACT822**	**★1367** **★1373** **★1374** 842-99
74ACT823	**VTC**	**V74ACT823**	**★1367** **★1373** **★1375** 842-97
74ACT824	**VTC**	**V74ACT824**	**★1367** **★1373** **★1375** 822-163
74ACT825	**VTC**	**V74ACT825**	**★1367** **★1373** 822-47
74ACT826	**VTC**	**V74ACT826**	**★1367** **★1373** 821-136
74ACT827	**VTC**	**V74ACT827**	**★1367** **★1370** **★1374** 810-143
74ACT828	**VTC**	**V74ACT828**	**★1367** **★1370** **★1374** 810-141
74ACT841	**VTC**	**V74ACT841**	**★1367** **★1372** **★1374** 831-36
74ACT842	**VTC**	**V74ACT842**	**★1367** **★1372** **★1374** 831-34
74ACT843	**VTC**	**V74ACT843**	**★1367** **★1372** **★1375** 831-44
74ACT844	**VTC**	**V74ACT844**	**★1367** **★1372** **★1375** 831-42
74ACT845	**VTC**	**V74ACT845**	**★1367** **★1372** **★1375** 831-40
74ACT846	**VTC**	**V74ACT846**	**★1367** **★1372** **★1375** 831-38
74ACT861	**VTC**	**V74ACT861**	**★1367** **★1371** **★1374** 842-116
74ACT862	**VTC**	**V74ACT862**	**★1367** **★1371** **★1374** 842-117
74ACT863	**VTC**	**V74ACT863**	**★1367** **★1371** **★1375** 842-120
74ACT864	**VTC**	**V74ACT864**	**★1367** **★1371** **★1375** 842-121
74ACT874	**VTC**	**V74ACT874**	**★1367** **★1373** 820-80
74ACT876	**VTC**	**V74ACT876**	**★1367** **★1373** 820-81
74ACT878	**VTC**	**V74ACT878**	**★1367** **★1373** 820-82
74ACT879	**VTC**	**V74ACT879**	**★1367** **★1373** 820-83
74ACT880	**VTC**	**V74ACT880**	**★1367** **★1372** 829-22
74AHCT00	**Samsung**	**KS74AHCT00**	**★1153** 825-46
74AHCT02	**Samsung**	**KS74AHCT02**	**★1153** 827-115
74AHCT03	**Samsung**	**KS74AHCT03**	**★1153** 825-127
74AHCT04	**Samsung**	**KS74AHCT04**	**★1153** 810-178
74AHCT05	**Samsung**	**KS74AHCT05**	**★1153** 810-179
74AHCT08	**Samsung**	**KS74AHCT08**	**★1153** 824-49
74AHCT09	**Samsung**	**KS74AHCT09**	**★1153** 824-104
74AHCT10	**Samsung**	**KS74AHCT10**	**★1153** 824-174
74AHCT107	**Samsung**	**KS74AHCT107**	**★1153** 823-107
74AHCT109	**Samsung**	**KS74AHCT109**	**★1153** 822-173
74AHCT11	**Samsung**	**KS74AHCT11**	**★1153** 824-1
74AHCT112	**Samsung**	**KS74AHCT112**	**★1153** 823-70
74AHCT12	**Samsung**	**KS74AHCT12**	**★1153** 824-175
74AHCT121	**Samsung**	**KS74AHCT121**	**★1153** 834-1
74AHCT123	**Samsung**	**KS74AHCT123**	**★1153**
74AHCT13	**Samsung**	**KS74AHCT13**	**★1153** 838-61
74AHCT138	IDT	IDT74AHCT138	818-11
74AHCT139	IDT	IDT74AHCT139	817-92
	Samsung	**KS74AHCT139**	**★1153** 817-93
74AHCT148	**Samsung**	**KS74AHCT148**	**★1153** 808-60
74AHCT154	**Samsung**	**KS74AHCT154**	**★1153** 819-13
74AHCT155	**Samsung**	**KS74AHCT155**	**★1153** 817-94
74AHCT157	**Samsung**	**KS74AHCT157**	**★1153** 832-58
74AHCT158	**Samsung**	**KS74AHCT158**	**★1153** 832-100
74AHCT160	**Samsung**	**KS74AHCT160**	**★1153** 814-163
74AHCT161	**Samsung**	**KS74AHCT161**	**★1153** 811-174
74AHCT162	**Samsung**	**KS74AHCT162**	**★1153** 814-114
74AHCT163	**Samsung**	**KS74AHCT163**	**★1153** 811-118
74AHCT164	**Samsung**	**KS74AHCT164**	**★1153** 836-32
74AHCT165	**Samsung**	**KS74AHCT165**	**★1153** 835-178
74AHCT166	**Samsung**	**KS74AHCT166**	**★1153** 836-68
74AHCT173	**Samsung**	**KS74AHCT173**	**★1153** 820-131
74AHCT174	**Samsung**	**KS74AHCT174**	**★1153** 820-178
74AHCT175	**Samsung**	**KS74AHCT175**	**★1153** 820-86
74AHCT182	IDT	IDT74AHCT182	806-82
74AHCT191	**Samsung**	**KS74AHCT191**	**★ 153** 813-18
74AHCT193	**Samsung**	**KS74AHCT193**	**★1153** 815-26
74AHCT210	**Samsung**	**KS74AHCT210**	**★1153** 839-64

Arranged alphanumerically from left to right.

Base Number	Source	Device	Page-Line
74AHCT238	**Samsung**	**KS74AHCT238 ★ 1153**	818-82
74AHCT239	**Samsung**	**KS74AHCT239 ★ 1153**	817-95
74AHCT240	IDT	IDT74AHCT240	839-76
	Samsung	**KS74AHCT240 ★ 1153**	839-65
74AHCT241	**Samsung**	**KS74AHCT241 ★ 1153**	840-49
74AHCT244	IDT	IDT74AHCT244	839-145
	Samsung	**KS74AHCT244 ★ 1153**	840-65
	TI	IDT74AHCT244	839-166
74AHCT245	IDT	IDT74AHCT245	841-124
	Samsung	**KS74AHCT245 ★ 1153**	841-109
74AHCT257	**Samsung**	**KS74AHCT257 ★ 1153**	832-134
74AHCT258	**Samsung**	**KS74AHCT258 ★ 1153**	832-167
74AHCT259	**Samsung**	**KS74AHCT259 ★ 1153**	830-169
74AHCT266	**Samsung**	**KS74AHCT266 ★ 1153**	828-93
74AHCT273	IDT	IDT74AHCT273	821-61
	Samsung	**KS74AHCT273 ★ 1153**	821-52
74AHCT299	IDT	IDT74AHCT299	836-150
	Samsung	**KS74AHCT299 ★ 1153**	836-143
74AHCT32	**Samsung**	**KS74AHCT32 ★ 1153**	826-125
74AHCT365	**Samsung**	**KS74AHCT365 ★ 1153**	809-112
74AHCT366	**Samsung**	**KS74AHCT366 ★ 1153**	809-181
74AHCT367	**Samsung**	**KS74AHCT367 ★ 1153**	839-3
74AHCT368	**Samsung**	**KS74AHCT368 ★ 1153**	809-182
74AHCT373	IDT	IDT74AHCT373	829-124
	Samsung	**KS74AHCT373 ★ 1153**	829-111
74AHCT374	IDT	IDT74AHCT374	822-63
	Samsung	**KS74AHCT374 ★ 1153**	822-48
74AHCT377	IDT	IDT74AHCT377	821-108
74AHCT393	**Samsung**	**KS74AHCT393 ★ 1153**	812-141
74AHCT399	**Samsung**	**KS74AHCT399 ★ 1153**	833-1
74AHCT423	**Samsung**	**KS74AHCT423 ★ 1153**	
74AHCT51	**Samsung**	**KS74AHCT51 ★ 1153**	826-44
74AHCT533	IDT	IDT74AHCT533	830-49
	Samsung	**KS74AHCT533 ★ 1153**	830-37
74AHCT534	IDT	IDT74AHCT534	821-149
	Samsung	**KS74AHCT534 ★ 1153**	821-137
74AHCT540	**Samsung**	**KS74AHCT540 ★ 1153**	810-54
74AHCT541	**Samsung**	**KS74AHCT541 ★ 1153**	841-110
74AHCT563	**Samsung**	**KS74AHCT563 ★ 1153**	830-38
74AHCT564	**Samsung**	**KS74AHCT564 ★ 1153**	821-138
74AHCT573	**Samsung**	**KS74AHCT573 ★ 1153**	829-112
74AHCT574	**Samsung**	**KS74AHCT574 ★ 1153**	822-49
74AHCT590	**Samsung**	**KS74AHCT590 ★ 1153**	813-104
74AHCT592	**Samsung**	**KS74AHCT592 ★ 1153**	813-82
74AHCT593	**Samsung**	**KS74AHCT593 ★ 1153**	813-83
74AHCT640	IDT	IDT74AHCT640	841-35
	Samsung	**KS74AHCT640 ★ 1153**	841-30
74AHCT643	**Samsung**	**KS74AHCT643 ★ 1153**	841-67
74AHCT645	IDT	IDT74AHCT645	841-125
74AHCT646	**Samsung**	**KS74AHCT646 ★ 1153**	840-151
74AHCT648	**Samsung**	**KS74AHCT648 ★ 1153**	840-105
74AHCT679	**Samsung**	**KS74AHCT679 ★ 1153**	806-95
74AHCT680	**Samsung**	**KS74AHCT680 ★ 1153**	806-96
74AHCT688	**Samsung**	**KS74AHCT688 ★ 1153**	806-126
74AHCT73	**Samsung**	**KS74AHCT73 ★ 1153**	823-108
74AHCT74	**Samsung**	**KS74AHCT74 ★ 1153**	820-14
74AHCT86	**Samsung**	**KS74AHCT86 ★ 1153**	828-21
74ALS00	Mitsubishi	M74ALS00A	870-193
	National	DM74ALS00	871-1
	TI	SN74ALS00A	871-3
74ALS01	Mitsubishi	M74ALS01	871-150
	National	DM74ALS01	871-155
	TI	SN74ALS01	871-160
74ALS02	Mitsubishi	M74ALS02	865-102
	National	DM74ALS02	865-107
	TI	SN74ALS02	874-3
74ALS03	Mitsubishi	M74ALS03A	871-151
	National	DM74ALS03	871-156
	TI	SN74ALS03B	871-161
74ALS04	National	DM74ALS04	857-89
	TI	SN74ALS04B	857-92
74ALS05	Mitsubishi	M74ALS05	857-147
	National	DM74ALS05	857-150
	TI	SN74ALS05A	857-153
74ALS08	Mitsubishi	M74ALS08	869-80
	National	DM74ALS08	869-84
	TI	SN74ALS08	869-88
74ALS09	Mitsubishi	M74ALS09	869-139
	National	DM74ALS09	869-141
	TI	SN74ALS09	869-143
74ALS10	Mitsubishi	M74ALS10	870-118
	National	DM74ALS10	870-121
	TI	SN74ALS10A	870-126
74ALS1000	National	DM74ALS1000	871-2
	TI	SN74ALS1000A	871-4
74ALS1002	National	DM74ALS1002	865-108
	TI	SN74ALS1002A	874-4
74ALS1003	National	DM74ALS1003	871-157
	TI	SN74ALS1003A	871-162
74ALS1004	National	DM74ALS1004	857-90
	TI	SN74ALS1004	857-93
74ALS1005	National	DM74ALS1005	857-151
	TI	SN74ALS1005	857-154
74ALS1008	National	DM74ALS1008	869-85
	TI	SN74ALS1008A	869-89
74ALS1010	National	DM74ALS1010	870-122
	TI	SN74ALS1010A	870-125
74ALS1011	National	DM74ALS1011	869-6
	TI	SN74ALS1011A	869-9
74ALS1020	National	DM74ALS1020	869-179
	TI	SN74ALS1020A	869-182
74ALS1032	National	DM74ALS1032	873-33
	TI	SN74ALS1032A	873-36
74ALS1034	National	DM74ALS1034	856-171
	TI	SN74ALS1034	856-173
74ALS1035	National	DM74ALS1035	856-149
	TI	SN74ALS1035	856-150
74ALS109	Mitsubishi	M74ALS109	867-110
	National	DM74ALS109	867-112
	TI	SN74ALS109A	867-114
74ALS11	Mitsubishi	M74ALS11	869-3
	National	DM74ALS11	869-7
	TI	SN74ALS11A	869-10
74ALS112	Mitsubishi	M74ALS112A	868-78
	TI	SN74ALS112A	868-80
74ALS113	Mitsubishi	M74ALS113A	868-46
	TI	SN74ALS113A	868-48
74ALS114	Mitsubishi	M74ALS114A	868-112
	TI	SN74ALS114A	868-114
74ALS12	Mitsubishi	M74ALS12	870-168
	National	DM74ALS12	870-170
	TI	SN74ALS12A	870-172
74ALS1240	National	DM74ALS1240	883-134
	TI	SN74ALS1240	883-126
		SN74ALS1240-1	883-127
74ALS1241	National	DM74ALS1241	884-9
	TI	SN74ALS1241	884-12
		SN74ALS1241-1	884-13
74ALS1242	Mitsubishi	M74ALS1242	883-31
	National	DM74ALS1242	883-43
	TI	SN74ALS1242	883-32
74ALS1243	Mitsubishi	M74ALS1243	883-33
	National	DM74ALS1243	883-44
	TI	SN74ALS1243	883-34
74ALS1244	Mitsubishi	M74ALS1244	884-59
	National	DM74ALS1244	884-63
	TI	SN74ALS1244A	884-66
		SN74ALS1244A-1	884-67
74ALS1245	Mitsubishi	M74ALS1245	885-56
	National	DM74ALS1245	885-64
	TI	SN74ALS1245A	885-70
		SN74ALS1245A-1	885-71
74ALS13	National	DM74ALS13	887-108
74ALS131	Mitsubishi	M74ALS131	863-161
	National	DM74ALS131	863-163
	TI	SN74ALS131	863-164
74ALS132	National	DM74ALS132	887-154
74ALS133	National	DM74ALS133	872-55
	TI	SN74ALS133	872-57
74ALS136	National	DM74ALS136	874-68
	TI	SN74ALS136	874-69
74ALS137	Mitsubishi	M74ALS137	863-148
	National	DM74ALS137	863-150
	TI	SN74ALS137	863-152
74ALS138	Mitsubishi	M74ALS138	863-99
	National	DM74ALS138	863-101
	TI	SN74ALS138	863-103
74ALS14	National	DM74ALS14	888-32
74ALS15	Mitsubishi	M74ALS15	869-47
	National	DM74ALS15	869-49
	TI	SN74ALS15A	869-51
74ALS151	National	DM74ALS151	879-163
	TI	SN74ALS151	879-165
74ALS153	Motorola	SN74ALS153	877-127
	National	DM74ALS153	877-129
	TI	SN74ALS153	877-131
74ALS157	TI	SN74ALS157	878-177
74ALS158	TI	SN74ALS158	878-81
74ALS160	Mitsubishi	M74ALS160A	860-149
	National	DM74ALS160	860-151
	TI	SN74ALS160B	860-152
74ALS161	Mitsubishi	M74ALS161A	858-135
	National	DM74ALS161	858-137
	TI	SN74ALS161B	858-139
74ALS1616	TI	SN74ALS1616	843-74
74ALS162	Mitsubishi	M74ALS162A	860-186
	National	DM74ALS162	861-2
	TI	SN74ALS162B	861-4
74ALS1620	National	DM74ALS1620	886-73
74ALS1621	Mitsubishi	M74ALS1621	886-28
	National	DM74ALS1621	886-74
	TI	SN74ALS1621	886-34
		SN74ALS1621-1	886-35
74ALS1622	Mitsubishi	M74ALS1622	886-29
	TI	SN74ALS1622	886-36
		SN74ALS1622-1	886-37
74ALS1623	National	DM74ALS1623	886-75
74ALS163	Mitsubishi	M74ALS163A	858-181
	National	DM74ALS163	858-183
	TI	SN74ALS163B	858-185
74ALS1638	National	DM74ALS1638	884-114
74ALS1639	National	DM74ALS1639	884-115
74ALS1640	Mitsubishi	M74ALS1640	884-150
	National	DM74ALS1640	884-155
	TI	SN74ALS1640A	884-159
		SN74ALS1640A-1	884-160

¶ Indicates page number in Application Note Directory.
★ Indicates additional data is provided on the page noted.

Base Number	Source	Device	Page-Line
74ALS1645			
	Mitsubishi	M74ALS1645	885-57
	TI	SN74ALS1645	2891-4
		SN74ALS1645A	885-72
		SN74ALS1645A-1	885-73
74ALS165			
	National	DM74ALS165	882-52
74ALS166			
	National	DM74ALS166	882-69
74ALS168			
	National	DM74ALS168	861-81
	TI	SN74ALS168B	861-82
74ALS169			
	National	DM74ALS169	859-123
	TI	SN74ALS169B	859-125
74ALS174			
	National	DM74ALS174	866-35
	TI	SN74ALS174	866-37
74ALS175			
	National	DM74ALS175	864-270
	TI	SN74ALS175	864-272
74ALS1804			
	TI	SN74ALS1804	864-149
74ALS1805			
	TI	SN74ALS1805	864-159
74ALS1808			
	TI	SN74ALS1808	864-140
74ALS1832			
	TI	SN74ALS1832	864-168 865-1
74ALS190			
	National	DM74ALS190	861-159
	TI	SN74ALS190	861-160
74ALS191			
	National	DM74ALS191	859-167
	TI	SN74ALS191	859-169
74ALS192			
	National	DM74ALS192	861-127
	TI	SN74ALS192	861-128
74ALS193			
	National	DM74ALS193	860-27
	TI	SN74ALS193	860-29
74ALS20			
	Mitsubishi	M74ALS20A	869-176
	National	DM74ALS20	869-180
	TI	SN74ALS20A	869-183
74ALS21			
	Mitsubishi	M74ALS21	868-143
	National	DM74ALS21	868-146
	TI	SN74ALS21	868-149
74ALS22			
	Mitsubishi	M74ALS22A	870-83
	National	DM74ALS22	868-147
	TI	SN74ALS22B	870-85
74ALS2240			
	TI	SN74ALS2240	883-28
74ALS2241			
	TI	SN74ALS2241	883-29
74ALS2242			
	TI	SN74ALS2242	883-35
74ALS2243			
	TI	SN74ALS2243	883-36
74ALS2244			
	TI	SN74ALS2244	883-30
74ALS229			
	TI	SN74ALS229	3809-11
74ALS230			
	TI	SN74ALS230	883-112
		SN74ALS230-1	883-113
74ALS231			
	TI	SN74ALS231	883-114
		SN74ALS231-1	883-115
74ALS232			
	TI	**SN74ALS232**	**★1211** 877-37
74ALS233			
	TI	**SN74ALS233**	**★1215** 877-71
74ALS234			
	TI	SN74ALS234	877-86
74ALS235			
	TI	SN74ALS235	877-87
74ALS240			
	Mitsubishi	M74ALS240	883-131
	National	DM74ALS240	883-125
	TI	SN74ALS240A	883-136
			(Continued)
74ALS240			
	TI	SN74ALS240A	2882-64
		SN74ALS240A-1	883-137
74ALS241			
	Mitsubishi	M74ALS241	884-6
	National	DM74ALS241	884-10
	TI	SN74ALS241A	884-14 2882-31
		SN74ALS241A-1	884-15
74ALS242			
	Mitsubishi	M74ALS242	883-37
	National	DM74ALS242	883-45
	TI	SN74ALS242B	883-47 2888-47
		SN74ALS242B-1	883-48
74ALS243			
	Mitsubishi	M74ALS243	883-38
	National	DM74ALS243	883-46
	TI	SN74ALS243A	883-49 2888-48
		SN74ALS243A-1	883-50
74ALS244			
	Mitsubishi	M74ALS244	884-60
	National	DM74ALS244	884-64
	TI	SN74ALS244A	884-68 2882-32
		SN74ALS244A-1	884-69
74ALS245			
	Mitsubishi	M74ALS245	885-58
	National	DM74ALS245	885-65
	TI	SN74ALS245A	885-74 2891-5
		SN74ALS245A-1	885-75
74ALS251			
	National	DM74ALS251	880-40
	TI	SN74ALS251	880-42
74ALS253			
	National	DM74ALS253	878-35
	TI	SN74ALS253	878-37
74ALS2540			
	TI	SN74ALS2540	883-128
74ALS2541			
	TI	SN74ALS2541	884-16
74ALS257			
	National	DM74ALS257	879-34
	TI	SN74ALS257A	879-37
74ALS258			
	National	DM74ALS258	878-120
	TI	SN74ALS258A	878-122
74ALS27			
	Mitsubishi	M74ALS27	865-43
	National	DM74ALS27	865-45
	TI	SN74ALS27	865-47
74ALS273			
	National	DM74ALS273	866-142
	TI	SN74ALS273	866-144
74ALS28			
	Mitsubishi	M74ALS28	865-103
	National	DM74ALS28	865-109
	TI	SN74ALS28A	874-5
74ALS2967			
	TI	SN74ALS2967	2892-74
74ALS2968			
	TI	**SN74ALS2968**	**★1301** 2892-75
74ALS299			
	Mitsubishi	M74ALS299	882-116
	TI	SN74ALS299	882-120
74ALS30			
	Mitsubishi	M74ALS30	872-10
	National	DM74ALS30	872-12
	TI	SN74ALS30A	872-14
74ALS32			
	Mitsubishi	M74ALS32	873-30
	National	DM74ALS32	873-34
	TI	SN74ALS32	873-37
74ALS323			
	Mitsubishi	M74ALS323	882-117
	TI	SN74ALS323	882-121
74ALS33			
	Mitsubishi	M74ALS33	865-72
	National	DM74ALS33	865-74
	TI	SN74ALS33A	865-76
74ALS34			
	TI	SN74ALS34	856-144
74ALS35			
	TI	SN74ALS35A	856-153
74ALS352			
	National	DM74ALS352	878-12
	TI	SN74ALS352	878-14
74ALS353			
	National	DM74ALS353	877-95
	TI	SN74ALS353	877-97
74ALS368			
	TI	SN74ALS368	858-8
74ALS37			
	Mitsubishi	M74ALS37	871-56
	National	DM74ALS37	871-58
	TI	SN74ALS37A	871-60
74ALS373			
	National	DM74ALS373	875-163
	TI	SN74ALS373	875-167
74ALS374			
	National	DM74ALS374	866-168
	TI	SN74ALS374	866-174
74ALS38			
	Mitsubishi	M74ALS38	871-95
	National	DM74ALS38	871-97
	TI	SN74ALS38A	871-99
74ALS40			
	Mitsubishi	M74ALS40	870-44
	National	DM74ALS40	870-46
	TI	SN74ALS40A	870-47
74ALS465			
	National	DM74ALS465	857-50
	TI	SN74ALS465A	857-52
74ALS466			
	National	DM74ALS466	858-57
	TI	SN74ALS466A	858-59
74ALS467			
	National	DM74ALS467	857-51
	TI	SN74ALS467A	857-53
74ALS468			
	National	DM74ALS468	858-58
	TI	SN74ALS468A	858-60
74ALS518			
	National	DM74ALS518	854-111
	TI	SN74ALS518	854-114
74ALS519			
	National	DM74ALS519	854-112
	TI	SN74ALS519	854-115
74ALS520			
	National	DM74ALS520	854-93
	TI	SN74ALS520	854-97
74ALS521			
	National	DM74ALS521	854-94
	TI	SN74ALS521	854-98
74ALS522			
	National	DM74ALS522	854-95
	TI	SN74ALS522	854-99
74ALS526			
	TI	SN74ALS526	4473-53
74ALS527			
	TI	SN74ALS527	4473-54 854-108
74ALS528			
	TI	SN74ALS528	4473-52
74ALS533			
	National	DM74ALS533	876-47
	TI	SN74ALS533	876-53
74ALS534			
	National	DM74ALS534	866-109
	TI	SN74ALS534	866-115
74ALS540			
	TI	SN74ALS540	883-129 2882-65
		SN74ALS540-1	883-130 2882-66
74ALS541			
	TI	SN74ALS541	884-17 2882-33
		SN74ALS541-1	884-18 2882-34
74ALS560			
	Mitsubishi	M74ALS560A	861-61
	TI	SN74ALS560A	861-62
74ALS561			
	Mitsubishi	M74ALS561A	859-90
	TI	SN74ALS561A	859-93
74ALS563			
	Mitsubishi	M74ALS563	876-42
	National	DM74ALS563	876-48
	TI	SN74ALS563	876-54
74ALS564			
	National	DM74ALS564	866-110
	TI	SN74ALS564A	866-116
74ALS568			
	Mitsubishi	M74ALS568A	861-71
	TI	SN74ALS568A	861-72
74ALS569			
	Mitsubishi	M74ALS569A	860-7
	TI	SN74ALS569A	860-9
74ALS573			
	Mitsubishi	M74ALS573	875-160
	National	DM74ALS573	875-164
	TI	SN74ALS573A	875-168
74ALS574			
	Mitsubishi	M74ALS574	866-165
	National	DM74ALS574	866-169
	TI	SN74ALS574A	866-175
74ALS575			
	TI	SN74ALS575A	866-176
74ALS576			
	National	DM74ALS576	869-86
	TI	SN74ALS576A	866-117
74ALS577			
	TI	SN74ALS577A	866-177
74ALS580			
	Mitsubishi	M74ALS580	876-43
	National	DM74ALS580	876-49
	TI	SN74ALS580	876-55
74ALS616			
	TI	**SN74ALS616**	**★1219** 887-10 2878-54
74ALS617			
	TI	**SN74ALS617**	**★1219** 887-11 2878-55
74ALS620			
	Mitsubishi	M74ALS620	886-66
	National	DM74ALS620	886-76
	TI	SN74ALS620A	886-80
		SN74ALS620A-1	886-81
74ALS621			
	Mitsubishi	M74ALS621	886-30
	TI	SN74ALS621A	886-38
		SN74ALS621A-1	886-39
74ALS622			
	Mitsubishi	M74ALS622	886-31
	National	DM74ALS622	886-33
	TI	SN74ALS622A	886-40
		SN74ALS622A-1	886-41
74ALS623			
	Mitsubishi	M74ALS623	886-67
	National	DM74ALS623	886-77
	TI	SN74ALS623A	886-82
		SN74ALS623A-1	886-83
74ALS632			
	Intech	SN74ALS632 ¶	400-8
	National	MM74ALS632	2878-43
	TI	SN74ALS632 ¶	368-17
		SN74ALS632A	**★1228** 889-63 2878-56
74ALS633			
	Intech	SN74ALS633 ¶	400-8
	National	MM74ALS633	2878-44
	TI	**SN74ALS633**	**★1228** 889-64 ¶ 368-17 2878-57
74ALS634			
	Intech	SN74ALS634 ¶	400-8
	National	MM74ALS634	2878-45
	TI	**SN74ALS634**	**★1228** 889-65 ¶ 368-17 2878-58
74ALS635			
	Intech	SN74ALS635 ¶	400-8
	National	MM74ALS635	2878-46
	TI	**SN74ALS635**	**★1228** 889-66 ¶ 368-17 2878-59
74ALS638			
	National	DM74ALS638	884-116
	TI	SN74ALS638A	884-118
		SN74ALS638A-1	884-119

Arranged alphanumerically from left to right.

PART NUMBER INDEX

Base Number	Source	Device	Page-Line
74ALS639	National	DM74ALS639	884-117
	TI	SN74ALS639A	884-120
		SN74ALS639A-1	884-121
74ALS640	Mitsubishi	M74ALS640	884-151
	National	DM74ALS640	884-156
	TI	SN74ALS640A	884-161
		SN74ALS640A-1	884-162
74ALS641	Mitsubishi	M74ALS641	885-38
	National	DM74ALS641	885-40
	TI	SN74ALS641A	885-41
		SN74ALS641A-1	885-42
74ALS642	Mitsubishi	M74ALS642	884-130
	National	DM74ALS642	884-132
	TI	SN74ALS642A	884-133
		SN74ALS642A-1	884-134
74ALS643	Mitsubishi	M74ALS643	884-152
	National	DM74ALS643	884-157
	TI	SN74ALS643A	884-163
		SN74ALS643A-1	884-164
74ALS644	Mitsubishi	M74ALS644	885-136
	National	DM74ALS644	885-138
	TI	SN74ALS644A	885-139
		SN74ALS644A-1	885-140
74ALS645	Mitsubishi	M74ALS645	885-59
	National	DM74ALS645	885-66
	TI	SN74ALS645A	885-76
			2891-6
		SN74ALS645A-1	885-77
74ALS646	**TI**	**SN74ALS646**	**★ 1239**
			885-173
		SN74ALS646-1	**★ 1239**
			885-174
74ALS647	**TI**	**SN74ALS647**	**★ 1239**
			885-163
		SN74ALS647-1	**★ 1239**
			885-164
74ALS648	**TI**	**SN74ALS648**	**★ 1239**
			885-175
		SN74ALS648-1	**★ 1239**
			885-176
74ALS649	Motorola	SN74ALS649	885-156
	TI	**SN74ALS649**	**★ 1239**
			885-165
		SN74ALS649-1	**★ 1239**
			885-166
74ALS651	Motorola	SN74ALS651	885-60
	TI	SN74ALS651	884-165
			885-177
		SN74ALS651-1	885-178
74ALS652	TI	SN74ALS652	884-166
			885-179
		SN74ALS652-1	885-180
74ALS653	TI	SN74ALS653	885-150
		SN74ALS653-1	885-151
74ALS654	TI	SN74ALS654	885-153
		SN74ALS654-1	885-154
74ALS666	TI	SN74ALS666	876-144
74ALS667	TI	SN74ALS667	876-143
74ALS677	TI	SN74ALS677	854-31
74ALS678	TI	SN74ALS678	854-32
74ALS679	TI	SN74ALS679	854-33
74ALS680	TI	SN74ALS680	854-34
74ALS688	TI	SN74ALS688	854-133
74ALS689	National	DM74ALS689	854-113
	TI	SN74ALS689	854-116
74ALS74	Mitsubishi	M74ALS74	864-216
	National	DM74ALS74	864-218
	TI	SN74ALS74A	864-220
74ALS742	TI	SN74ALS742	856-83
74ALS743	TI	SN74ALS743	856-84
74ALS746	TI	SN74ALS746	856-85
		SN74ALS746-1	856-86
74ALS747	TI	SN74ALS747	856-87
		SN74ALS747-1	856-88
74ALS756	TI	SN74ALS756	883-120
		SN74ALS756-1	883-121
74ALS757	TI	SN74ALS757	884-3
		SN74ALS757-1	884-4
74ALS758	TI	SN74ALS758	883-103
74ALS759	TI	SN74ALS759	883-99
74ALS760	TI	SN74ALS760	884-101
74ALS762	TI	SN74ALS762	856-82
74ALS763	TI	SN74ALS763	856-81
74ALS790	Motorola	SN74ALS790	2878-38
74ALS8003	TI	SN74ALS8003	869-166
74ALS804	National	DM74ALS804	864-147
	TI	SN74ALS804	864-150
74ALS805	National	DM74ALS805	864-156
	TI	SN74ALS805	864-160
74ALS808	National	DM74ALS808	864-138
	TI	SN74ALS808	864-141
74ALS810	National	DM74ALS810	874-150
	TI	SN74ALS810	874-151
74ALS811	National	DM74ALS811	874-164
	TI	SN74ALS811	874-165
74ALS818	**TI**	**SN74ALS818**	**★ 1244**
74ALS819	**TI**	**SN74ALS819**	**★ 1244**
74ALS832	National	DM74ALS832	864-166
			873-76
	TI	SN74ALS832	864-169
			865-2
74ALS841	TI	SN74ALS841	876-123
74ALS842	TI	SN74ALS842	876-115
74ALS843	TI	SN74ALS843	876-98
74ALS844	TI	SN74ALS844	876-97
74ALS845	TI	SN74ALS845	876-87
74ALS846	TI	SN74ALS846	876-88
74ALS857	TI	SN74ALS857	879-135
74ALS86	National	DM74ALS86	874-103
	TI	SN74ALS86	874-105
74ALS873	Mitsubishi	M74ALS873	875-7
	National	DM74ALS873	875-9
	TI	SN74ALS873A	875-11
74ALS874	National	DM74ALS874	864-181
	TI	SN74ALS874A	864-187
74ALS876	National	DM74ALS876	864-182
	TI	SN74ALS876A	864-188
74ALS878	TI	SN74ALS878A	864-189
74ALS879	TI	SN74ALS879A	864-190
74ALS880	Mitsubishi	M74ALS880	875-92
	National	DM74ALS880	875-94
	TI	SN74ALS880	875-95
74ALS990	TI	SN74ALS990	876-104
74ALS991	TI	SN74ALS991	876-103
74ALS992	TI	SN74ALS992	876-106
74ALS993	TI	SN74ALS993	876-105
74ALS994	**TI**	**SN74ALS994**	**★ 1299**
			876-114
74ALS995	**TI**	**SN74ALS995**	**★ 1299**
			876-113
74ALS996	**TI**	**SN74ALS996**	**★ 1300**
			875-152
74AS00	National	DM74AS00	871-7
	TI	SN74AS00	871-9
74AS02	National	DM74AS02	874-8
	TI	SN74AS02	874-11
74AS04	National	DM74AS04	857-96
	TI	SN74AS04	857-100
74AS08	National	DM74AS08	869-92
	TI	SN74AS08	869-95
74AS10	National	DM74AS10	870-128
	TI	SN74AS10	870-130
74AS1000	National	DM74AS1000	871-8
	TI	SN74AS1000A	871-10
74AS1004	National	DM74AS1004	857-97
	TI	SN74AS1004	857-101
74AS1008	National	DM74AS1008	869-93
	TI	SN74AS1008A	869-96
74AS1032	National	DM74AS1032	873-40
	TI	SN74AS1032A	873-43
74AS1034	National	DM74AS1034	856-141
			856-175
	TI	SN74AS1034A	856-143
			856-177
74AS1036	National	DM74AS1036	864-57
			874-9
	TI	SN74AS1036A	864-58
			874-12
74AS109	National	DM74AS109	867-116
	TI	SN74AS109	867-118
74AS11	National	DM74AS11	869-12
	TI	SN74AS11	869-14
74AS131	TI	SN74AS131	863-165
74AS136	TI	SN74AS136	874-62
74AS137	TI	SN74AS137	863-153
74AS138	TI	SN74AS138	863-107
74AS150	TI	SN74AS150	880-84
74AS151	TI	SN74AS151	879-166
74AS153	TI	SN74AS153	877-132
74AS157	TI	SN74AS157	878-179
74AS158	National	DM74AS158	878-83
	TI	SN74AS158	878-85
74AS160	National	DM74AS160	860-154
	TI	SN74AS160	860-155
74AS161	National	DM74AS161	858-142
	TI	SN74AS161	858-145
74AS162	National	DM74AS162	858-143
	TI	SN74AS162	861-5
74AS163	National	DM74AS163	858-187
	TI	SN74AS163	858-189
74AS168	National	DM74AS168	861-84
	TI	SN74AS168	861-85
74AS169	National	DM74AS169	859-127
	TI	SN74AS169	859-129
74AS174	National	DM74AS174	866-39
	TI	SN74AS174	866-41
74AS175	National	DM74AS175	864-274
	TI	SN74AS175	864-275
74AS1804	TI	SN74AS1804	864-153
74AS1805	TI	SN74AS1805	864-163
74AS1808	TI	SN74AS1808	864-144
74AS181	National	DM74AS181B	855-29
	TI	SN74AS181A	855-34
74AS182	National	DM74AS182	855-92
	TI	SN74AS182	855-97
74AS1832	TI	SN74AS1832	864-172
74AS1881	TI	SN74AS1881	855-35
74AS194	TI	SN74AS194	881-128
74AS195	TI	SN74AS195	881-37
74AS20	National	DM74AS20	869-185
	TI	SN74AS20	869-187
74AS21	National	DM74AS21	868-151
	TI	SN74AS21	868-153
74AS230	National	DM74AS230	884-73
	TI	SN74AS230	883-118
74AS231	National	DM74AS231	884-74
	TI	SN74AS231	883-119
74AS240	National	DM74AS240	883-135
	TI	SN74AS240	883-138
			2883-1
74AS241	National	DM74AS241	884-20
	TI	SN74AS241	884-21
			2882-35
74AS242	National	DM74AS242	883-53
	TI	SN74AS242	883-55
			2888-62
74AS243	National	DM74AS243	883-54
	TI	SN74AS243	883-56
			2888-63
74AS244	National	DM74AS244	884-75
	TI	SN74AS244	884-76
			2882-36
74AS245	National	DM74AS245	885-80
	TI	SN74AS245	885-83
			2891-7
74AS250	TI	SN74AS250	880-89
74AS251	TI	SN74AS251	880-43
74AS253	TI	SN74AS253	878-38
74AS257	National	DM74AS257	879-35
	TI	SN74AS257	879-39
74AS258	National	DM74AS258	878-124
	TI	SN74AS258	878-125
74AS2620	National	DM74AS2620	885-33
	TI	SN74AS2620	885-34

¶ Indicates page number in Application Note Directory.

★ Indicates additional data is provided on the page noted.

Base Number	Source	Device	Page-Line
74AS2623	TI	SN74AS2623	885-36
74AS264	National	DM74AS264	855-93
	TI	SN74AS264	855-98
74AS2640	TI	SN74AS2640	885-35
74AS2645	TI	SN74AS2645	885-37
74AS27	National	DM74AS27	865-49
	TI	SN74AS27	865-51
74AS280	National	DM74AS280	889-15
	TI	SN74AS280	889-16
74AS282	National	DM74AS282	855-94
	TI	SN74AS282	855-99
74AS286	National	DM74AS286	889-43
	TI	SN74AS286	889-44
74AS298	TI	SN74AS298	879-82
74AS29822	TI	SN74AS29822	882-172
74AS29823	TI	SN74AS29823	882-162
74AS29824	TI	SN74AS29824	882-163
74AS29825	TI	SN74AS29825	882-41
74AS29826	TI	SN74AS29826	882-42
74AS29841	TI	SN74AS29841	876-128
74AS29842	TI	SN74AS29842	876-129
74AS29843	TI	SN74AS29843	876-111
74AS29844	TI	SN74AS29844	876-112
74AS29845	TI	SN74AS29845	876-91
74AS29846	TI	SN74AS29846	876-92
74AS299	TI	SN74AS299	882-122
74AS30	National	DM74AS30	872-16
	TI	SN74AS30	872-18
74AS32	National	DM74AS32	873-41
	TI	SN74AS32	873-44
74AS323	TI	SN74AS323	882-123
74AS34	National	DM74AS34	856-146
	TI	SN74AS34	856-147
74AS352	TI	SN74AS352	878-15
74AS353	TI	SN74AS353	877-98
74AS373	National	DM74AS373	875-171
	TI	SN74AS373	875-175
74AS374	National	DM74AS374	866-182
	TI	SN74AS374	866-189
74AS533	National	DM74AS533	876-58
	TI	SN74AS533	876-60
74AS534	National	DM74AS534	866-111
	TI	SN74AS534	866-118
74AS573	National	DM74AS573	875-172
	TI	SN74AS573	875-176
74AS574	National	DM74AS574	866-183
	TI	SN74AS574	866-190
74AS575	National	DM74AS575	866-184
	TI	SN74AS575	866-191
74AS576	National	DM74AS576	866-120
	TI	SN74AS576	866-122
74AS577	National	DM74AS577	866-185
	TI	SN74AS577	866-192
74AS580	National	DM74AS580	876-59
	TI	SN74AS580	876-61
74AS620	National	DM74AS620	886-86
	TI	SN74AS620	886-88
74AS621	National	DM74AS621	886-44
	TI	SN74AS621	886-46
74AS622	National	DM74AS622	886-45
	TI	SN74AS622	886-47
74AS623	National	DM74AS623	886-87
	TI	SN74AS623	886-89
74AS638	National	DM74AS638	884-124
	TI	SN74AS638	884-126
74AS639	National	DM74AS639	884-125
	TI	SN74AS639	884-127
74AS640	National	DM74AS640	884-172
	TI	SN74AS640	885-3
74AS641	National	DM74AS641	885-44
	TI	SN74AS641	885-45
74AS642	National	DM74AS642	884-136
	TI	SN74AS642	884-137
74AS643	National	DM74AS643	884-173
	TI	SN74AS643	885-4
74AS644	National	DM74AS644	884-174
	TI	SN74AS644	885-141
74AS645	National	DM74AS645	885-81
	TI	SN74AS645	885-84
74AS646	National	DM74AS646	885-183
	TI	SN74AS646	885-186
74AS648	TI	SN74AS648	885-187
74AS651	National	DM74AS651	884-175
	TI	SN74AS651	885-5
74AS652	National	DM74AS652	884-176
	TI	SN74AS652	885-6
74AS74	National	DM74AS74	864-222
	TI	SN74AS74	864-224
74AS756	TI	SN74AS756	883-122
74AS757	TI	SN74AS757	884-5
74AS758	TI	SN74AS758	883-100
74AS759	TI	SN74AS759	883-101
74AS760	TI	SN74AS760	884-102
74AS762	TI	SN74AS762	884-103
74AS763	TI	SN74AS763	884-99
74AS804	National	DM74AS804A	864-151
	TI	SN74AS804B	864-154
74AS805	National	DM74AS805A	864-161
	TI	SN74AS805B	864-164
74AS808	National	DM74AS808A	864-142
	TI	SN74AS808B	864-145
74AS810	National	DM74AS810	874-145
	TI	SN74AS810	874-146
74AS811	National	DM74AS811	874-147
	TI	SN74AS811	874-148
74AS821	TI	SN74AS821	867-68
74AS822	TI	SN74AS822	867-66
74AS823	TI	SN74AS823	867-60
74AS824	TI	SN74AS824	867-58
74AS825	TI	SN74AS825	867-54
74AS826	TI	SN74AS826	867-52
74AS832	National	DM74AS832A	864-170
	TI	SN74AS832B	864-173
74AS841	TI	SN74AS841	876-119
74AS842	TI	SN74AS842	876-116
74AS843	TI	SN74AS843	876-99
74AS844	TI	SN74AS844	876-95
74AS845	TI	SN74AS845	876-81
74AS846	TI	SN74AS846	876-40
74AS850	TI	SN74AS850	880-73
74AS851	TI	SN74AS851	880-74
74AS852	TI	SN74AS852	886-118
74AS856	TI	SN74AS856	886-119
74AS857	TI	SN74AS857	879-136
74AS86	National	DM74AS86	874-107
	TI	SN74AS86	874-87
74AS866	TI	SN74AS866	856-70
74AS867	TI	SN74AS867	859-111
74AS869	TI	SN74AS869	859-112
74AS870	**TI**	**SN74AS870**	**★1250**
			876-137
74AS871	**TI**	**SN74AS871**	**★1250**
			876-138
74AS873	National	DM74AS873	875-13
	TI	SN74AS873	875-14
74AS874	National	DM74AS874	864-195
	TI	SN74AS874	864-201
74AS876	National	DM74AS876	864-196
	TI	SN74AS876	864-202
74AS877	**TI**	**SN74AS877**	**★1255**
			888-138
74AS878	National	DM74AS878	864-197
	TI	SN74AS878	864-203
74AS879	National	DM74AS879	864-198
	TI	SN74AS879	864-204
74AS880	National	DM74AS880	875-97
	TI	SN74AS880	875-98
74AS881	National	DM74AS881B	855-30
	TI	SN74AS881A	855-36
74AS882	TI	SN74AS882	855-100
74AS885	TI	SN74AS885	854-135
74AS887	TI	SN74AS887	1448-41
74AS888	**TI**	**SN74AS888**	**★1260**
			844-88
			1449-110
74AS890	**TI**	**SN74AS890**	**★1276**
			1449-112
74AS895	TI	SN74AS895	1448-40
74AS897	**TI**	**SN74AS897**	**★1288**
			854-30
74AS95	National	DM74AS95	881-72
	TI	SN74AS95	881-73
74ASA87	TI	SN74ASA87	¶ 356-17
74C00	National	MM74C00	825-48
			¶ 353-13
74C02	National	MM74C02	827-117
			¶ 353-13
74C04	National	MM74C04	810-181
			¶ 353-13
74C08	National	MM74C08	824-51
74C10	National	MM74C10	824-177
74C107	National	MM74C107	823-111
74C14	National	MM74C14	839-14
			¶ 361-13
74C150	National	MM74C150	833-159
74C151	National	MM74C151	833-27
74C154	National	MM74C154	819-15
74C157	National	MM74C157	832-60
74C160	National	MM74C160	814-165
74C161	National	MM74C161	811-176
74C162	National	MM74C162	814-116
74C163	National	MM74C163	811-120
74C164	National	MM74C164	836-34
			3856-65
74C165	National	MM74C165	835-180
			3856-36
74C173	National	MM74C173	820-133
74C174	National	MM74C174	820-180
74C175	National	MM74C175	820-88
74C192	National	MM74C192	815-28
74C193	National	MM74C193	812-39
74C195	National	MM74C195	835-90
			3855-17
74C20	National	MM74C20	824-117
74C200	National	MM74C200	831-114
			3832-87
74C221	National	MM74C221	834-3
74C240	National	MM74C240	839-67
74C244	National	MM74C244	840-67
74C30	National	MM74C30	825-145
74C32	National	MM74C32	826-127
74C374	National	MM74C374	822-51
74C42	National	MM74C42	817-4
74C48	National	MM74C48	817-56
74C73	National	MM74C73	823-112
74C74	National	MM74C74	820-16
74C76	National	MM74C76	822-175
74C83	National	MM74C83	806-34
74C85	National	MM74C85	807-28
74C86	National	MM74C86	828-23
74C89	National	MM74C89	831-99
			3831-120
74C90	National	MM74C90	814-160
74C901	National	MM74C901	809-105
			¶ 400-15
74C902	National	MM74C902	809-107
			¶ 400-15
74C903	National	MM74C903	809-101
			¶ 400-15
74C904	National	MM74C904	809-103
			¶ 400-15
74C905	National	MM74C905	838-14
74C906	National	MM74C906	809-97
74C907	National	MM74C907	809-99
74C908	National	MM74C908	819-174
			¶ 354-8
74C909	National	MM74C909	837-63
			3316-14
74C910	National	MM74C910	831-133
			¶ 439-14
74C911	National	MM74C911	820-6
			2876-86
74C912	National	MM74C912	820-7
			2877-1
74C914	National	MM74C914	839-15
74C915	National	MM74C915	820-10
			2877-22
74C917	National	MM74C917	820-8
			2877-2
74C918	National	MM74C918	819-175
			¶ 354-8
74C920	National	MM74C920	¶ 437-9
74C921	National	MM74C921	¶ 437-9
74C922	National	MM74C922	2880-2
			¶ 356-15
74C923	National	MM74C923	2880-6
74C925	National	MM74C925	816-62
74C926	National	MM74C926	816-63
74C927	National	MM74C927	816-27

Arranged alphanumerically from left to right.

Base Number	Source	Device	Page-Line
74C928	National	MM74C928	816-26
74C929	National	MM74C929	¶ 437-9
74C93	National	MM74C93	811-113
74C930	National	MM74C930	¶ 437-9
74C932	National	MM74C932	837-65
74C941	National	MM74C941	810-43 2882-26
74C945	Maxim	MM74C945	816-28
	National	MM74C945	816-30
74C946	National	MM74C946	816-24
74C947	Maxim	MM74C947	816-29
	National	MM74C947	816-31
74C95	National	MM74C95	835-28 3855-22
74C956	National	MM74C956	819-127 2876-93 1466-72
74F00	**Fairchild**	**74F00**	**★1021** **★5310** 871-12
	Motorola	**MC74F00**	**★1122** 871-14
	Signetics	**74F00**	**★1156** 871-16
74F02	**Fairchild**	**74F02**	**★1021** **★5310** 874-14
	Motorola	**MC74F02**	**★1122** 874-16
	Signetics	**74F02**	**★1156** 874-17
74F04	**Fairchild**	**74F04**	**★1021** **★5310** 857-103
	Motorola	**MC74F04**	**★1124** 857-105
	Signetics	**74F04**	**★1156** 857-107
74F08	**Fairchild**	**74F08**	**★1021** **★5310** 869-98
	Motorola	**MC74F08**	**★1122** 869-100
	Signetics	**74F08**	**★1156** 869-101
74F10	**Fairchild**	**74F10**	**★1021** **★5310** 870-132
	Motorola	**MC74F10**	**★1122** 870-133
	Signetics	**74F10**	**★1156** 870-134
74F109	**Fairchild**	**74F109**	**★1021** **★5310** 867-120
	Motorola	**MC74F109**	**★1126** 867-122
	Signetics	**74F109**	**★1156** 867-123
74F11	**Fairchild**	**74F11**	**★1021** **★5310** 869-16
	Motorola	**MC74F11**	**★1122** 869-18
	Signetics	**74F11**	**★1156** 869-19
74F112	**Fairchild**	**74F112**	**★1021** **★5310** 868-82
	Motorola	**MC74F112**	**★1126** 868-84
	Signetics	**74F112**	**★1156** 868-85
74F113	**Fairchild**	**74F113**	**★1021** **★5310** 868-50
	Motorola	**MC74F113**	**★1126** 868-52
	Signetics	**74F113**	**★1156** 868-53
74F114	**Fairchild**	**74F114**	**★1021** **★5310** 868-116
	Motorola	**MC74F114**	**★1126** 868-118 (Continued)

Base Number	Source	Device	Page-Line
74F114	**Signetics**	**74F114**	**★1156** 868-119
74F1240	**Signetics**	**74F1240**	**★1160** 883-147
74F1241	**Signetics**	**74F1241**	**★1160** 884-29
74F1242	**Signetics**	**74F1242**	**★1160** 883-67
74F1243	**Signetics**	**74F1243**	**★1160** 883-68
74F1244	**Signetics**	**74F1244**	**★1160** 884-82
74F1245	**Signetics**	**74F1245**	**★1160** 885-97
74F125	**Signetics**	**74F125**	**★1157** 856-100
74F126	**Signetics**	**74F126**	**★1157** 856-125
74F13	**Fairchild**	**74F13**	**★1021** 887-110
	Signetics	**74F13**	**★1156** 887-111
74F132	**Fairchild**	**74F132**	**★1021** 887-156
	Signetics	**74F132**	**★1157** 887-157
74F138	**Fairchild**	**74F138**	**★1025** **★5310** 863-109
	Motorola	**MC74F138**	**★1130** 863-111
	Signetics	**74F138**	**★1157** 863-112
74F139	**Fairchild**	**74F139**	**★1025** 863-7
	Motorola	**MC74F139**	**★1130** 863-9
	Signetics	**74F139**	**★1157** 863-11
74F14	**Fairchild**	**74F14**	**★1021** 888-34
	Signetics	**74F14**	**★1156** 888-35
74F146	**Fairchild**	**74F146**	**★1028**
74F148	**Fairchild**	**74F148**	**★1028** **★5310** 888-152
	Signetics	**74F148**	**★1157** 888-153
74F151	**Fairchild**	**74F151**	**★1025** **★5310** 879-168
	Motorola	**MC74F151**	**★1129** 879-170
	Signetics	**74F151**	**★1157** 879-171
74F153	**Fairchild**	**74F153**	**★1025** **★5310** 877-134
	Motorola	**MC74F153**	**★1129** 877-136
	Signetics	**74F153**	**★1157** 877-137
74F157	**Fairchild**	**74F157**	**★1025** **★5310** 879-2
	Motorola	**MC74F157**	**★1129** 879-4
	Signetics	**74F157**	**★1157** 879-6
74F158	**Fairchild**	**74F158**	**★1025** **★5310** 878-87
	Motorola	**MC74F158**	**★1129** 878-89
	Signetics	**74F158**	**★1157** 878-91
74F160	**Fairchild**	**74F160A**	**★1023** **★5310** 860-157 (Continued)

Base Number	Source	Device	Page-Line
74F160	**Motorola**	**MC74F160A**	**★1127** 860-159
	Signetics	**74F160A**	**★1157** 860-160
74F161	**Fairchild**	**74F161A**	**★1023** **★5310** 858-147
	Motorola	**MC74F161A**	**★1127** 858-149
	Signetics	**74F161A**	**★1157** **★1181** 858-150
74F162	**Fairchild**	**74F162A**	**★1023** **★5310** 861-7
	Motorola	**MC74F162A**	**★1127** 861-9
	Signetics	**74F162A**	**★1157** **★1181** 861-10
74F163	**Fairchild**	**74F163A**	**★1023** **★5310** 859-2
	Motorola	**MC74F163A**	**★1127** 859-4
	Signetics	**74F163A**	**★1157** **★1181** 859-5
74F164	**Fairchild**	**74F164**	**★1023** **★5310** 882-2
	Signetics	74F164	882-3
74F165	Signetics	74F165	882-53
74F166	**Signetics**	**74F166**	**★1157** 882-70
74F168	**Fairchild**	**74F168**	**★1023** **★5310** 861-87
	Motorola	**MC74F168**	**★1127** 861-89
	Signetics	**74F168**	**★1157** 861-90
74F169	**Fairchild**	**74F169**	**★1023** **★5310** 859-132
	Motorola	**MC74F169**	**★1127** 859-135
	Signetics	**74F169**	**★1157** 859-137
74F174	**Fairchild**	**74F174**	**★1022** **★5310** 866-43
	Motorola	**MC74F174**	**★1126** 866-45
	Signetics	**74F174**	**★1157** 866-46
74F175	**Fairchild**	**74F175**	**★1022** **★5310** 864-277
	Motorola	**MC74F175**	**★1126** 864-279
	Signetics	**74F175**	**★1157** 864-280
74F181	**Fairchild**	**74F181**	**★1026** **★5310** 855-40
	Motorola	**MC74F181**	**★1132** 855-46
	Signetics	**74F181**	**★1157** 855-50
74F182	**Fairchild**	**74F182**	**★1027** **★5310** 855-102
	Motorola	**MC74F182**	**★1132** 855-104
	Signetics	**74F182**	**★1157** 855-105
74F189	**Fairchild**	**74F189**	**★1027** **★5310** 877-56
	Motorola	MC74F189	877-59
74F190	**Fairchild**	**74F190**	**★1023** **★5310** 861-162
	Motorola	**MC74F190**	**★1127** 861-164 (Continued)

Base Number	Source	Device	Page-Line
74F190	**Signetics**	**74F190**	**★1157** 861-165
74F191	**Fairchild**	**74F191**	**★1023** **★5310** 859-171
	Motorola	**MC74F191**	**★1127** 859-173
	Signetics	**74F191**	**★1157** 859-174
74F192	**Fairchild**	**74F192**	**★1023** **★5310** 861-130
	Motorola	**MC74F192**	**★1127** 861-132
	Signetics	**74F192**	**★1157** 861-133
74F193	**Fairchild**	**74F193**	**★1023** **★5310** 860-31
	Motorola	**MC74F193**	**★1127** 860-33
	Signetics	**74F193**	**★1157** 860-34
74F194	**Fairchild**	**74F194**	**★1023** **★5310** 881-130
	Motorola	**MC74F194**	**★1128** 881-132
	Signetics	**74F194**	**★1157** 881-133
74F195	**Fairchild**	**74F195**	**★1023** 881-39
	Motorola	MC74F195	881-41
	Signetics	**74F195**	**★1157** 881-42
74F198	**Signetics**	**74F198**	**★1157** 882-30
74F199	**Signetics**	**74F199**	**★1157** 882-36
74F20	**Fairchild**	**74F20**	**★1021** **★5310** 870-2
	Motorola	**MC74F20**	**★1122** 870-4
	Signetics	**74F20**	**★1156** 870-6
74F211	**Fairchild**	**74F211**	**★1027** 877-80
74F212	**Fairchild**	**74F212**	**★1027** 877-81
74F213	**Fairchild**	**74F213**	**★1027** 877-85
74F219	**Fairchild**	**74F219**	**★1027** **★5310** 877-57
74F240	**Fairchild**	**74F240**	**★1024** **★5310** 883-141 **★1024** **★5310** 2882-45
	Motorola	**MC74F240**	**★1124** 883-144
	Signetics	**74F240**	**★1157** 883-148
74F241	**Fairchild**	**74F241**	**★1024** **★5310** 884-24
	Motorola	**MC74F241**	**★1124** 884-27
	Signetics	**74F241**	**★1157** 884-30
74F242	**Fairchild**	**74F242**	**★1024** 883-59
	Motorola	**MC74F242**	**★1124** 883-63
	Signetics	**74F242**	**★1158** 883-69
74F243	**Fairchild**	**74F243**	**★1024** 883-60
	Motorola	**MC74F243**	**★1124** 883-64
	Signetics	**74F243**	**★1158** 883-70
74F244	**Fairchild**	**74F244**	**★1024** **★5310** (Continued)

¶ Indicates page number in Application Note Directory.
★ Indicates additional data is provided on the page noted.

Base Number	Source	Device	Page-Line
74F244	Fairchild	74F244	884-78
	Motorola	**MC74F244**	**★1124**
			884-80
	Signetics	**74F244**	**★1158**
			884-83
74F245	**Fairchild**	**74F245**	**★1024**
			★5310
			885-87
	Motorola	**MC74F245**	**★1124**
			885-92
			2890-62
	Signetics	**74F245**	**★1158**
			885-98
74F251	**Fairchild**	**74F251**	**★1025**
			★5310
			880-45
	Motorola	**MC74F251**	**★1129**
			880-47
	Signetics	**74F251**	**★1158**
			880-48
74F253	**Fairchild**	**74F253**	**★1025**
			★5310
			878-40
	Motorola	**MC74F253**	**★1129**
			878-42
	Signetics	**74F253**	**★1158**
			878-43
74F256	**Fairchild**	**74F256**	**★1022**
			875-16
	Signetics	**74F256**	**★1158**
			875-17
74F257	**Fairchild**	**74F257**	**★1025**
			★5310
			879-41
	Motorola	**MC74F257**	**★1129**
			879-43
	Signetics	**74F257**	**★1158**
			879-45
74F258	**Fairchild**	**74F258**	**★1025**
			★5310
			878-127
	Motorola	**MC74F258**	**★1129**
			878-129
	Signetics	**74F258**	**★1158**
			878-131
74F259	**Fairchild**	**74F259**	**★1022**
			875-136
	Signetics	**74F259**	**★1158**
			875-137
74F260	**Signetics**	**74F260**	**★1158**
			865-17
74F266	**Signetics**	**74F266**	**★1158**
74F269	**Fairchild**	**74F269**	**★1023**
			859-133
	Signetics	**74F269**	**★1158**
			★1183
			859-138
74F27	**Signetics**	**74F27**	**★1156**
74F273	**Fairchild**	**74F273**	**★1022**
			866-146
	Signetics	**74F273**	**★1158**
			866-148
74F280	**Fairchild**	**74F280**	**★1026**
			★5310
			889-18
	Motorola	**MC74F280**	**★1132**
			889-20
	Signetics	**74F280A**	**★1158**
			889-22
74F283	**Fairchild**	**74F283**	**★1025**
			★5310
			856-33
	Motorola	**MC74F283**	**★1132**
			856-35
	Signetics	**74F283**	**★1158**
			856-36
74F289	Fairchild	74F289	877-40
	Motorola	MC74F289	877-43
74F2960			
	Motorola	**MC74F2960**	**★1132**
			885-93
			2878-37
			1448-104
			1464-26
74F2961			
	Motorola	MC74F2961	1448-112
74F2962			
	Motorola	MC74F2962	1448-113
74F2968			
	Motorola	MC74F2968	2892-58
			1448-100
74F2969			
	Motorola	MC74F2969	2892-51
			1448-123
74F2970			
	Motorola	MC74F2970	2892-53
			1448-126
74F298	**Fairchild**	**74F298**	**★1025**
			879-86
	Signetics	**74F298**	**★1158**
			879-89
74F299	**Fairchild**	**74F299**	**★1023**
			★5310
			882-126
	Motorola	MC74F299	882-130
	Signetics	**74F299**	**★1158**
			882-132
74F30	**Signetics**	**74F30**	**★1156**
			872-19
74F30240			
	Fairchild	**74F30240**	**★1024**
	Signetics	**74F30240**	**★1160**
			884-2
74F30241			
	Fairchild	**74F30241**	**★1024**
	Signetics	**74F30241**	**★1160**
			884-58
74F30244			
	Fairchild	**74F30244**	**★1024**
	Signetics	**74F30244**	**★1160**
			884-98
74F30245			
	Signetics	**74F30245**	**★1160**
			885-127
74F3037			
	Fairchild	**74F3037**	**★1021**
			888-18
	Signetics	**74F3037**	**★1160**
			887-66
74F3038			
	Fairchild	**74F3038**	**★1021**
	Signetics	**74F3038**	**★1160**
			888-19
74F3040			
	Fairchild	**74F3040**	**★1021**
			887-131
	Signetics	**74F3040**	**★1160**
			886-164
74F30640			
	Signetics	**74F30640**	**★1160**
74F311	Fairchild	74F311	877-76
74F312	Fairchild	74F312	877-77
74F313	Fairchild	74F313	877-83
74F319	Fairchild	74F319	877-41
74F32	**Fairchild**	**74F32**	**★1021**
			873-46
	Motorola	**MC74F32**	**★1122**
			873-48
	Signetics	**74F32**	**★1156**
			873-49
74F322	**Fairchild**	**74F322**	**★1023**
			★5310
			882-89
	Signetics	**74F322**	**★1158**
			882-90
74F323	**Fairchild**	**74F323**	**★1023**
			★5310
			882-127
	Motorola	MC74F323	882-131
	Signetics	**74F323**	**★1158**
			882-133
74F350	**Fairchild**	**74F350**	**★1025**
			★1027
			★5310
			843-121
	Motorola	**MC74F350**	**★1132**
			843-125
	Signetics	**74F350**	**★1158**
			843-127
74F352	**Fairchild**	**74F352**	**★1025**
			★3510
			878-17
	Motorola	**MC74F352**	**★1129**
			(Continued)
74F352	Motorola	MC74F352	878-19
	Signetics	**74F352**	**★1158**
			878-20
74F353	**Fairchild**	**74F353**	**★1025**
			★5310
			877-100
	Motorola	**MC74F353**	**★1129**
			877-102
	Signetics	**74F353**	**★1158**
			877-103
74F365	**Fairchild**	**74F365**	**★1024**
			856-180
	Signetics	74F365	857-4
74F366	**Fairchild**	**74F366**	**★1024**
			858-11
			864-124
	Signetics	**74F366**	**★1158**
			858-15
			864-126
74F367	**Fairchild**	**74F367**	**★1024**
			857-1
	Signetics	**74F367**	**★1158**
			857-5
74F368	**Fairchild**	**74F368**	**★1024**
			858-12
	Signetics	**74F368**	**★1158**
			858-16
74F37	**Fairchild**	**74F37**	**★1021**
			871-62
	Signetics	**74F37**	**★1156**
			871-63
74F373	**Fairchild**	**74F373**	**★1022**
			★5310
			875-181
	Motorola	**MC74F373**	**★1126**
			876-3
	Signetics	**74F373**	**★1158**
			876-5
74F374	**Fairchild**	**74F374**	**★1022**
			★5310
			867-3
	Motorola	**MC74F374**	**★1126**
			867-6
	Signetics	**74F374**	**★1158**
			867-8
74F377	**Fairchild**	**74F377**	**★1022**
			867-37
	Signetics	**74F377**	**★1158**
			867-39
74F378	**Fairchild**	**74F378**	**★1022**
			★5310
			866-74
	Motorola	**MC74F378**	**★1126**
			866-76
	Signetics	**74F378**	**★1158**
			866-77
74F379	**Fairchild**	**74F379**	**★1022**
			★5310
			864-321
	Motorola	**MC74F379**	**★1126**
			864-323
	Signetics	**74F379**	**★1158**
			864-324
74F38	**Fairchild**	**74F38**	**★1021**
			871-101
	Signetics	**74F38**	**★1156**
			871-102
74F381	**Fairchild**	**74F381**	**★1026**
			★5310
			855-41
	Motorola	**MC74F381**	**★1132**
			855-47
	Signetics	**74F381**	**★1158**
			855-51
74F382	**Fairchild**	**74F382**	**★1026**
			★5310
			855-42
	Motorola	MC74F382	855-48
	Signetics	**74F382**	**★1158**
			855-52
74F384	**Fairchild**	**74F384**	**★1026**
			★5310
			843-23
	Signetics	**74F384**	**★1158**
			843-47
74F385	**Fairchild**	**74F385**	**★1025**
			★5310
			854-6
	Signetics	**74F385**	**★1158**
			854-7
74F395	**Fairchild**	**74F395**	**★1023**
			881-102
	Signetics	**74F395**	**★1158**
			881-103
74F398	**Fairchild**	**74F398**	**★1025**
			★5310
			879-87
	Signetics	**74F398**	**★1158**
			879-90
74F399	**Fairchild**	**74F399**	**★1022**
			★1025
			★5310
			879-88
	Signetics	**74F399**	**★1158**
			879-91
74F40	**Fairchild**	**74F40**	**★1021**
			870-49
	Signetics	**74F40**	**★1156**
			870-50
74F401	**Fairchild**	**74F401**	**★1028**
			★5310
			854-156
			★1028
			★5310
			2878-9
74F402	**Fairchild**	**74F402**	**★1022**
			★1028
			★5310
			881-14
			★1022
			★1028
			★5310
			2878-15
74F403	**Fairchild**	**74F403**	**★1027**
			3809-4
74F407	**Fairchild**	**74F407**	**★1027**
			★5310
			876-132
74F410	**Fairchild**	**74F410**	**★1022**
			★1027
			★5310
			877-69
74F411	**Fairchild**	**74F411**	**★1027**
74F412	**Fairchild**	**74F412**	**★1022**
			★5310
			875-182
	Signetics	**74F412**	**★1158**
			876-6
74F413	**Fairchild**	**74F413**	**★1027**
			3809-61
74F416	Fairchild	74F416	2878-30
74F418	Fairchild	74F418	2878-31
			2879-4
74F420	**Fairchild**	**74F420**	**★1027**
			2878-32
74F430	Fairchild	74F430	2879-2
74F432	**Fairchild**	**74F432**	**★1022**
			★5310
			875-183
	Signetics	**74F432**	**★1158**
			876-7
74F433	**Fairchild**	**74F433**	**★1027**
			3809-62
74F445	Signetics	74F445	862-84
74F455	**Signetics**	**74F455**	**★1184**
74F456	**Signetics**	**74F456**	**★1184**
74F492	Fairchild	74F492	2878-13
74F500	**Fairchild**	**74F500**	**★1028**
			844-1
			2832-10
74F51	**Signetics**	**74F51**	**★1156**
			872-84
74F510	Fairchild	74F510	843-122
74F521	**Fairchild**	**74F521**	**★1026**
			★5310
			854-101
	Motorola	**MC74F521**	**★1131**
			854-103
	Signetics	**74F521**	**★1159**
			854-105

Arranged alphanumerically from left to right.

PART NUMBER INDEX

Base Number	Source	Device	Page-Line
74F524	**Fairchild**	**74F524**	**★1026** **★5310** 854-36
	Signetics	**74F524**	**★1159** 854-37
74F525	**Fairchild**	**74F525**	**★1023** **★1026** **★5310** 862-30 889-62
74F526	Fairchild	74F526	886-111
74F533	**Fairchild**	**74F533**	**★1022** **★5310** 876-63
	Motorola	**MC74F533**	**★1126** 876-66
	Signetics	**74F533**	**★1159** 876-68
74F534	**Fairchild**	**74F534**	**★1022** **★5310** 866-124
	Motorola	**MC74F534**	**★1127** 866-126
	Signetics	**74F534**	**★1159** 866-128
74F537	**Fairchild**	**74F537**	**★1025** **★5310** 862-149
	Motorola	MC74F537	862-151
	Signetics	**74F537**	**★1159** 862-152
74F538	**Fairchild**	**74F538**	**★1025** 863-142
	Motorola	MC74F538	863-144
	Signetics	**74F538**	**★1159** 863-145
74F539	**Fairchild**	**74F539**	**★1025** **★5310** 863-63
	Motorola	MC74F539	863-65
	Signetics	**74F539**	**★1159** 863-66
74F540	**Fairchild**	**74F540**	**★1024** 883-142
	Signetics	**74F540**	**★1159** 883-149 2882-61
74F541	**Fairchild**	**74F541**	**★1024** 884-25
	Signetics	**74F541**	**★1159** 884-31 2882-27
74F543	**Fairchild**	**74F543**	**★1024** **★5310** 886-8
	Signetics	**74F543**	**★1159** 886-17
74F544	**Fairchild**	**74F544**	**★1024** **★5310** 886-9
	Signetics	**74F544**	**★1159** 886-18
74F545	**Fairchild**	**74F545**	**★1024** **★5310** 885-88
	Signetics	**74F545**	**★1159** 885-99
74F547	**Fairchild**	**74F547**	**★1025** **★5310** 863-95
	Signetics	**74F547**	**★1159** 863-97
74F548	**Fairchild**	**74F548**	**★1025** **★5310** 863-96
	Signetics	**74F548**	**★1159** 863-98
74F550	**Fairchild**	**74F550**	**★1024** **★5310** 886-10
	Signetics	**74F550**	**★1159** 886-19
74F551	**Fairchild**	**74F551**	**★1024** **★5310** 886-11 (Continued)
74F551	**Signetics**	**74F551**	**★1159** 886-20
74F552	**Fairchild**	**74F552**	**★1024** **★5310** 886-12
74F557	Fairchild	74F557	843-24
	Signetics	**74F557**	**★1159** 843-37
74F558	Fairchild	74F558	843-25
	Signetics	**74F558**	**★1159** 843-38
74F559	Fairchild	74F559	855-123
74F563	**Fairchild**	**74F563**	**★1022** **★5310** 876-64
	Signetics	**74F563**	**★1159** 876-69
74F564	**Fairchild**	**74F564**	**★1022**
	Signetics	**74F564**	**★1159** 866-129
74F568	**Fairchild**	**74F568**	**★1023** **★5310** 861-74
	Signetics	**74F568**	**★1159** 861-76
74F569	**Fairchild**	**74F569**	**★1023** **★5310** 859-116
	Signetics	**74F569**	**★1159** 861-77
74F570	Fairchild	74F570	877-36
74F571	Fairchild	74F571	877-34
74F573	**Fairchild**	**74F573**	**★1022** **★5310** 876-1
	Signetics	**74F573**	**★1159** 876-8
74F574	**Fairchild**	**74F574**	**★1022** 867-4
74F579	**Fairchild**	**74F579**	**★1023** 859-117
	Signetics	**74F579**	**★1159** **★1186** 861-78
74F582	**Fairchild**	**74F582**	**★1026** **★5310**
74F583	**Fairchild**	**74F583**	**★1025** **★5310** 854-164
	Signetics	**74F583**	**★1159** 854-165
74F588	**Fairchild**	**74F588**	**★1024** **★5310** 887-24
	Signetics	74F588	884-109
74F595	**Fairchild**	**74F595**	**★1023** 882-93
	Signetics	74F595	882-94
74F597	**Fairchild**	**74F597**	**★1023** 882-79
	Signetics	**74F597**	**★1159** 882-81
74F598	**Fairchild**	**74F598**	**★1023** 882-80
	Signetics	74F598	882-82
74F604	**Fairchild**	**74F604**	**★1022** 875-103
	Signetics	74F604	875-109
74F605	Fairchild	74F605	875-104
	Signetics	74F605	875-110
74F606	Fairchild	74F606	875-105
74F607	Fairchild	74F607	875-106
74F610	Fairchild	74F610	887-30
74F611	Fairchild	74F611	887-31
74F612	Fairchild	74F612	887-32
74F613	Fairchild	74F613	887-33
74F620	**Fairchild**	**74F620**	**★1024** 886-92
	Motorola	**MC74F620**	**★1125** 886-96
	Signetics	**74F620**	**★1159** **★1188** 886-99
74F621	**Fairchild**	**74F621**	**★1024** 886-50
	Motorola	MC74F621	886-53 (Continued)
74F621	**Signetics**	**74F621**	**★1159** **★1190** 886-54
74F622	**Fairchild**	**74F622**	**★1024** 886-51
	Signetics	**74F622**	**★1159** **★1190** 886-55
74F623	**Fairchild**	**74F623**	**★1024** 886-93
	Motorola	**MC74F623**	**★1125** 886-97
	Signetics	**74F623**	**★1159** **★1188** 886-100
74F630	**Fairchild**	**74F630**	**★1027** 2878-33
	Signetics	**74F630**	**★1159** 2878-50
74F631	Fairchild	74F631	2878-34
	Signetics	**74F631**	**★1159** 2878-51
74F632	**Fairchild**	**74F632**	**★1027**
74F64	**Fairchild**	**74F64**	**★1021** **★5310** 873-2
	Motorola	**MC74F64**	**★1123** 873-4
	Signetics	**74F64**	**★1156** 873-6
74F640	**Motorola**	**MC74F640**	**★1125** 885-9
	Signetics	**74F640**	**★1159** 885-11
74F641	**Signetics**	**74F641**	**★1159** 885-46
		74F641-1	**★1159** **★1159** 885-47
74F642	**Signetics**	**74F642**	**★1159** 884-138
74F643	**Motorola**	**MC74F643**	**★1125** 885-10
74F645	Motorola	MC74F645	885-94
	Signetics	**74F645**	**★1159** 885-100
74F646	**Fairchild**	**74F646**	**★1024** 886-13
	Signetics	**74F646**	**★1159** 886-21
74F647	Signetics	74F647	885-161
74F648	**Fairchild**	**74F648**	**★1024** 886-14
	Signetics	**74F648**	**★1159** 886-22
74F649	**Signetics**	**74F649**	**★1159** 885-162
74F655	**Fairchild**	**74F655**	**★1024** 858-52
	Signetics	**74F655**	**★1159** 858-54
74F656	**Fairchild**	**74F656**	**★1024** 857-45
	Signetics	**74F656**	**★1159** 857-47
74F657	**Fairchild**	**74F657**	**★1024** 885-147
	Signetics	**74F657**	**★1159** **★1192** 885-149
74F673	**Fairchild**	**74F673**	**★1023** **★5310** 883-22 **★1023** **★5310** 3856-103
	Signetics	**74F673**	**★1159** 883-23 3856-107
74F674	**Fairchild**	**74F674**	**★1023** 883-9 3856-104
	Signetics	**74F674**	**★1159** 883-10 3856-108
74F675	**Fairchild**	**74F675**	**★1023** **★5310** 883-19 **★1023** **★5310** 3856-105
	Signetics	**74F675**	**★1159** 883-20 3856-109
74F676	**Fairchild**	**74F676**	**★1023** **★5310** 883-16 **★1023** **★5310** 3856-106
	Signetics	**74F676**	**★1159** 883-17 3856-110
74F701	**Fairchild**	**74F701**	**★1028**
74F702	**Fairchild**	**74F702**	**★1024**
74F74	**Fairchild**	**74F74**	**★1021** **★5310** 864-226
	Motorola	**MC74F74**	**★1126** 864-228
	Signetics	**74F74**	**★1156** 864-229
74F764	Signetics	74F764	2892-101
74F765	**Signetics**	**74F765**	**★1160**
74F779	**Fairchild**	**74F779**	**★1023** 859-118
	Signetics	**74F779**	**★1160** 859-119
74F784	**Fairchild**	**74F784**	**★1026** **★5310** 843-26
	Signetics	**74F784**	**★1160** 843-42
74F785	**Fairchild**	**74F785**	**★1026**
74F821	**Fairchild**	**74F821**	**★1022** 867-70
	Signetics	**74F821**	**★1160** 867-71
74F822	**Fairchild**	**74F822**	**★1022**
	Signetics	**74F822**	**★1160** 867-64
74F823	**Fairchild**	**74F823**	**★1022** 867-62
	Signetics	**74F823**	**★1160** 867-63
74F824	**Signetics**	**74F824**	**★1160** 867-59
74F825	**Fairchild**	**74F825**	**★1022** 867-56
	Signetics	**74F825**	**★1160** 867-57
74F826	**Fairchild**	**74F826**	**★1022**
	Signetics	**74F826**	**★1160** 867-53
74F827	**Fairchild**	**74F827**	**★1024** 857-71
	Signetics	**74F827**	**★1160** 857-72
74F828	**Fairchild**	**74F828**	**★1024** 858-71
	Signetics	**74F828**	**★1160** 858-72
74F841	**Fairchild**	**74F841**	**★1022** 876-121
	Signetics	**74F841**	**★1160** 876-122
74F842	**Signetics**	**74F842**	**★1160** 876-117
74F843	**Fairchild**	**74F843**	**★1022** 876-101
	Signetics	**74F843**	**★1160** 876-102
74F844	**Signetics**	**74F844**	**★1160** 876-96
74F845	**Fairchild**	**74F845**	**★1022** 876-83
	Signetics	**74F845**	**★1160** 876-84
74F846	**Signetics**	**74F846**	**★1160** 876-41

¶ Indicates page number in Application Note Directory.
★ Indicates additional data is provided on the page noted.

Base Number	Source	Device	Page-Line
74F85	Fairchild	74F85	854-73
	Signetics	**74F85**	★1156
			854-74
74F86	**Fairchild**	**74F86**	★1021
			★5310
			874-109
	Motorola	**MC74F86**	★1123
			874-111
	Signetics	**74F86**	★1156
			874-113
74F861	**Signetics**	**74F861**	★1160
			886-124
74F862	**Signetics**	**74F862**	★1160
			886-125
74F881	**Signetics**	**74F881**	★1160
			855-53
74F882	**Signetics**	**74F882**	★1160
			855-106
74FCT139	IDT	IDT74FCT139	817-98
74FCT182	IDT	IDT74FCT182	806-84
74FCT240	IDT	IDT74FCT240	839-70
74FCT244	IDT	IDT74FCT244	839-146
74FCT245	IDT	IDT74FCT245	841-115
74FCT273	IDT	IDT74FCT273	821-55
74FCT299	IDT	IDT74FCT299	836-145
74FCT373	IDT	IDT74FCT373	829-115
74FCT374	IDT	IDT74FCT374	822-54
74FCT377	IDT	IDT74FCT377	821-103
74FCT521	IDT	IDT74FCT521	821-104
74FCT533	IDT	IDT74FCT533	830-41
74FCT534	IDT	IDT74FCT534	821-141
74FCT640	IDT	IDT74FCT640	841-33
74FCT645	IDT	IDT74FCT645	841-116
74H00	Fairchild	74H00	871-18
	National	DM74H00	871-22
	TI	SN74H00	871-23
74H01	Fairchild	74H01	871-164
	National	DM74H01	871-166
	TI	SN74H01	871-167
74H04	Fairchild	74H04	857-109
	National	DM74H04	857-111
	TI	SN74H04	857-112
74H05	Fairchild	74H05	857-156
	TI	SN74H05	857-157
74H08	Fairchild	74H08	869-103
	National	DM74H08	869-107
74H09	Fairchild	74H09	869-145
74H10	Fairchild	74H10	870-136
	National	DM74H10	870-138
	TI	SN74H10	870-139
74H101	Fairchild	74H101	867-100
	TI	SN74H101	867-101
74H102	TI	SN74H102	867-98
74H103	Fairchild	74H103	868-76
	TI	SN74H103	868-77
74H106	Fairchild	74H106	868-87
	National	DM74H106	868-89
	TI	SN74H106	868-90
74H108	Fairchild	74H108	868-44
	TI	SN74H108	868-45
74H11	Fairchild	74H11	869-21
	National	DM74H11	869-23
	TI	SN74H11	869-24
74H15	TI	SN74H15	869-52
74H183	Fairchild	74H183	855-2
	TI	SN74H183	855-3
			¶ 441-18
74H20	Fairchild	74H20	870-8
	National	DM74H20	870-10
	TI	SN74H20	870-11
74H21	Fairchild	74H21	868-155
	National	DM74H21	868-157
	TI	SN74H21	868-158
74H22	Fairchild	74H22	870-87
	TI	SN74H22	870-88
74H30	Fairchild	74H30	872-21
	National	DM74H30	872-23
	TI	SN74H30	872-24
74H40	Fairchild	74H40	870-52
	National	DM74H40	870-55
	TI	SN74H40	870-56
74H50	Fairchild	74H50	872-125
	National	DM74H50	872-127
	TI	SN74H50	872-128
74H51	Fairchild	74H51	872-86
	National	DM74H51	872-88
	TI	SN74H51	872-89
74H52	Fairchild	74H52	872-73
	TI	SN74H52	872-74
74H53	Fairchild	74H53	872-153
	TI	SN74H53	872-154
74H54	Fairchild	74H54	872-150
	TI	SN74H54	872-151
74H55	Fairchild	74H55	872-147
	TI	SN74H55	872-148
74H60	TI	SN74H60	887-133
74H61	Fairchild	74H61	887-136
	TI	SN74H61	887-137
74H62	Fairchild	74H62	888-54
	TI	SN74H62	888-55
74H71	TI	SN74H71	867-96
74H72	Fairchild	74H72	867-89
74H73	Fairchild	74H73	867-170
	TI	SN74H73	867-175
74H74	Fairchild	74H74	864-231
	National	DM74H74	864-234
	TI	SN74H74	864-235
74H76	TI	SN74H76	868-32
74H78	TI	SN74H78	867-142
74H87	Fairchild	74H87	888-104
	Motorola	MC74H87	888-106
	TI	SN74H87	888-107
74HC00	Fairchild	74HC00	825-50
	Goldstar	**GD74HC00**	★1066
			825-51
	Hitachi	HD74HC00	825-52
	Mitsubishi	M74HC00	825-53
	Motorola	**MC74HC00**	★1122
			825-55
	National	MM74HC00	825-57
	RCA	**CD74HC00**	★1149
			825-59
	SPI	SP74HC00	825-60
	SGS	M74HC00	825-61
	Sharp	LR74HC00	825-62
	Signetics	**74HC00**	★1156
			825-63
	SSS	SS74HC00	825-65
	TI	SN74HC00	825-68
	Toshiba	**TC74HC00**	★1363
			825-69
	Universal	US74HC00	825-70
74HC01	Hitachi	HD74HC01	824-121
	TI	SN74HC01	824-168
74HC02	Fairchild	74HC02	827-119
	Goldstar	**GD74HC02**	★1066
			827-120
	Hitachi	HD74HC02	827-121
	Mitsubishi	M74HC02	827-122
	Motorola	**MC74HC02**	★1122
			827-125
	National	MM74HC02	827-128
	Panasonic	MN74HC02	827-129
	RCA	**CD74HC02**	★1149
			827-131
	SPI	SP74HC02	827-132
	SGS	M74HC02	827-133
	Sharp	LR74HC02	827-134
	Signetics	**74HC02**	★1156
			827-135
	SSS	SS74HC02	827-137
	TI	SN74HC02	827-140
	Toshiba	**TC74HC02**	★1363
			827-143
	Universal	US74HC02	827-144
74HC03	Mitsubishi	M74HC03	825-128
	Motorola	**MC74HC03**	★1122
			825-130
	National	MM74HC03	825-132
	RCA	**CD74HC03**	★1149
			825-121
	SGS	M74HC03	825-133
	Signetics	**74HC03**	★1156
			825-122
	TI	SN74HC03	825-135
	Toshiba	**TC74HC03**	★1363
			825-137
	Universal	US74HC03	825-123
74HC04	**Goldstar**	**GD74HC04**	★1066
			811-1
	Hitachi	HD74HC04	811-3
	Mitsubishi	M74HC04	811-29
	Motorola	**MC74HC04**	★1124
			811-6
	National	MM74HC04	811-9
	RCA	**CD74HC04**	★1149
			811-12
	SPI	SP74HC04	811-14
	SGS	M74HC04	811-15
	Sharp	LR74HC04	811-16
	Signetics	**74HC04**	★1156
			811-17
	SSS	SS74HC04	811-19
	TI	SN74HC04	811-22
	Toshiba	**TC74HC04**	★1363
			811-24
	Universal	US74HC04	811-25
74HC05	**Goldstar**	**GD74HC05**	★1066
			811-2
	Mitsubishi	M74HC05	811-30
	Motorola	MC74HC05	811-7
	TI	SN74HC05	811-23
74HC07	Fairchild	74HC07	808-146
	Goldstar	**GD74HC07**	★1066
			808-147
74HC08	Fairchild	74HC08	824-53
	Goldstar	**GD74HC08**	★1066
			824-54
	Hitachi	HD74HC08	824-55
	Mitsubishi	M74HC08	824-56
	Motorola	**MC74HC08**	★1122
			824-58
	National	MM74HC08	824-60
	Panasonic	MN74HC08	824-61
	RCA	**CD74HC08**	★1149
			824-63
	SPI	SP74HC08	824-64
	SGS	M74HC08	824-65
	Sharp	LR74HC08	824-66
	Signetics	**74HC08**	★1156
			824-67
	SSS	SS74HC08	824-69
	TI	SN74HC08	824-71
	Toshiba	**TC74HC08**	★1363
			824-73
	Universal	US74HC08	824-74
74HC09	Hitachi	HD74HC09	824-105
	TI	SN74HC09	824-107
74HC10	Fairchild	74HC10	824-179
	Goldstar	**GD74HC10**	★1066
			824-180
	Hitachi	HD74HC10	824-181
	Mitsubishi	M74HC10	824-182
	Motorola	**MC74HC10**	★1122
			824-184
	National	MM74HC10	824-187
	Panasonic	MN74HC10	824-189
	RCA	**CD74HC10**	★1149
			824-191
	SPI	SP74HC10	824-192
	SGS	M74HC10	824-193
	Sharp	LR74HC10	824-194
	Signetics	**74HC10**	★1156
			825-1
	SSS	SS74HC10	825-3
	TI	SN74HC10	825-5
	Toshiba	**TC74HC10**	★1363
			825-6
	Universal	US74HC10	825-7
74HC107	Hitachi	HD74HC107	823-113
	Mitsubishi	M74HC107	823-115
	Motorola	**MC74HC107**	★1126
			823-119
	National	MM74HC107	823-123
	Panasonic	MN74HC107	823-125
	RCA	**CD74HC107**	★1149
			823-128
	SPI	SP74HC107	823-130
	SGS	M74HC107	823-132
	Signetics	**74HC107**	★1156
			823-134
	TI	SN74HC107	823-137
	Toshiba	**TC74HC107**	★1363
			823-139
	Universal	US74HC107	823-141
74HC108	Hitachi	HD74HC108	823-100
74HC109	Fairchild	74HC109	822-178
	Hitachi	HD74HC109	822-180
	Mitsubishi	M74HC109	822-182
	Motorola	**MC74HC109**	★1126
			822-186
	National	MM74HC109	823-2
	Panasonic	MN74HC109	823-4
	RCA	**CD74HC109**	★1149
			823-7
	SPI	SP74HC109	823-8
	SGS	M74HC109	823-10
	Sharp	LR74HC109	823-12
	Signetics	**74HC109**	★1156
			823-14
	TI	SN74HC109	823-16
	Toshiba	**TC74HC109**	★1363
			823-18
	Universal	US74HC109	823-21
74HC11	**Goldstar**	**GD74HC11**	★1066
			824-2
	Hitachi	HD74HC11	824-3
	Mitsubishi	M74HC11	824-4
	Motorola	**MC74HC11**	★1122
			824-6
	National	MM74HC11	824-8
	Panasonic	MN74HC11	824-9
	RCA	**CD74HC11**	★1149
			824-11
	SPI	SP74HC11	824-12
	SGS	M74HC11	824-13
	Sharp	LR74HC11	824-14
	Signetics	**74HC11**	★1156
			824-15
	TI	SN74HC11	824-17
	Toshiba	**TC74HC11**	★1363
			824-18
	Universal	US74HC11	824-19
74HC112	Fairchild	74HC112	823-72
	Goldstar	**GD74HC112**	★1066
			823-73
	Hitachi	HD74HC112	823-74
	Mitsubishi	M74HC112	823-75
	Motorola	**MC74HC112**	★1126
			823-77
	National	MM74HC112	823-79
	Panasonic	MN74HC112	823-80
	RCA	**CD74HC112**	★1149
			823-82
	SPI	SP74HC112	823-83
	SGS	M74HC112	823-84
	Sharp	LR74HC112	823-85
	Signetics	**74HC112**	★1156
			823-86
	TI	SN74HC112	823-88
	Toshiba	**TC74HC112**	★1363
			823-19
	Universal	US74HC112	823-89
74HC113	Hitachi	HD74HC113	823-58
	Motorola	**MC74HC113**	★1126
			823-60
	National	MM74HC113	823-62
	SPI	SP74HC113	823-63
	SGS	M74HC113	823-64
	TI	SN74HC113	823-66

(Continued)

Arranged alphanumerically from left to right.

Base Number	Source	Device	Page-Line
74HC113			
	Toshiba	**TC74HC113**	★**1363** 823-67
74HC114			
	Hitachi	HD74HC114	823-101
	TI	SN74HC114	823-104
74HC116			
	Universal	US74HC116	828-156
74HC123			
	Goldstar	**GD74HC123**	★**1066** 834-66
	Hitachi	HD74HC123	834-67
	Mitsubishi	M74HC123	834-11
	Motorola	**MC74HC123A**	★**1131** 834-69
	National	MM74HC123	834-72
		MM74HC123A	834-73
	Panasonic	MN74HC123	834-74
	RCA	**CD74HC123**	★**1150** 834-76
	Signetics	**74HC123**	★**1157** 834-77
	Toshiba	**TC74HC123**	★**1363** 834-37
	Universal	US74HC123	834-78
74HC125			
	Fairchild	74HC125	808-125
	Goldstar	**GD74HC125**	★**1066** 808-77
	Hitachi	HD74HC125	808-126
	Mitsubishi	M74HC125	808-127
	Motorola	**MC74HC125**	★**1124** 808-81
	National	MM74HC125	808-130
	RCA	**CD74HC125**	★**1149** 808-132
	SPI	SP74HC125	808-133
	SGS	M74HC125	808-85
	Signetics	**74HC125**	★**1157** 808-87
	TI	SN74HC125	808-90
	Toshiba	**TC74HC125**	★**1363** 808-139
	Universal	US74HC125	808-135
74HC126			
	Hitachi	HD74HC126	808-78
	Mitsubishi	M74HC126	808-128
	Motorola	**MC74HC126**	★**1124** 808-82
	National	MM74HC126	808-141
	RCA	**CD74HC126**	★**1149** 808-84
	SPI	SP74HC126	808-142
	SGS	M74HC126	808-86
	Signetics	**74HC126**	★**1157** 808-88
	TI	SN74HC126	808-91
	Toshiba	**TC74HC126**	★**1363** 808-134
	Universal	US74HC126	808-92
74HC131			
	Toshiba	**TC74HC131**	★**1363** 818-155
74HC132			
	Fairchild	74HC132	838-142
	Goldstar	**GD74HC132**	★**1066** 838-143
	Hitachi	HD74HC132	838-144
	Mitsubishi	M74HC132	838-145
	Motorola	**MC74HC132**	★**1125** 838-147
	National	MM74HC132	838-149
	RCA	**CD74HC132**	★**1149** 838-151
	SPI	SP74HC132	838-152
	SGS	M74HC132	838-153
	Sharp	LR74HC132	838-154
	Signetics	**74HC132**	★**1157** 838-155
	TI	SN74HC132	838-156
	Toshiba	**TC74HC132**	★**1363** 838-157
74HC133			
	Fairchild	74HC133	825-187
	Hitachi	HD74HC133	825-188
	Mitsubishi	M74HC133	825-189
			(Continued)
74HC133			
	Motorola	**MC74HC133**	★**1122** 825-191
	National	MM74HC133	825-193
	Panasonic	MN74HC133	825-194
	SPI	SP74HC133	825-195
	SGS	M74HC133	825-196
	TI	SN74HC133	825-198
	Toshiba	**TC74HC133**	★**1363** 825-199
74HC137			
	Hitachi	HD74HC137	818-100
	Motorola	MC74HC137	818-104
	National	MM74HC137	818-108
	RCA	**CD74HC137**	★**1150** 818-112
	Samsung	74HC137	818-114
	SGS	M74HC137	818-116
	Signetics	**74HC137**	★**1157** 818-118
	SSS	SS74HC137	818-120
	TI	SN74HC137	818-122
	Toshiba	**TC74HC137**	★**1363** 818-123
	Universal	US74HC137	818-124
74HC138			
	Fairchild	74HC138	818-7
	Goldstar	**GD74HC138**	★**1066** 818-8
	Hitachi	HD74HC138	818-9
	IDT	74HC138	818-3
	Mitsubishi	M74HC138	818-46
	Motorola	**MC74HC138**	★**1130** 818-13
	National	MM74HC138	818-15
	Panasonic	MN74HC138	818-16
	RCA	**CD74HC138**	★**1150** 818-20
	Samsung	74HC138	818-23
	SPI	SP74HC138	818-25
	SGS	M74HC138	818-26
	Sharp	LR74HC138	818-27
	Signetics	**74HC138**	★**1157** 818-28
	SSS	SS74HC138	818-32
	TI	SN74HC138	818-35
	Toshiba	**TC74HC138**	★**1363** 818-36
	Universal	US74HC138	818-37
74HC139			
	Fairchild	74HC139	817-101
	Goldstar	**GD74HC139**	★**1066** 817-102
	Hitachi	HD74HC139	817-103
	IDT	74HC139	817-96
	Mitsubishi	M74HC139	817-105
	Motorola	**MC74HC139**	★**1130** 817-108
	National	MM74HC139	817-111
	Panasonic	MN74HC139	817-112
	RCA	**CD74HC139**	★**1150** 817-114
	Samsung	74HC139	817-115
	SPI	SP74HC139	817-116
	SGS	M74HC139	817-118
	Sharp	LR74HC139	817-119
	Signetics	**74HC139**	★**1157** 817-120
	SSS	SS74HC139	817-123
	TI	SN74HC139	817-126
	Toshiba	**TC74HC139**	★**1363** 817-128
	Universal	US74HC139	817-129
74HC14	Fairchild	74HC14	811-81
	Goldstar	**GD74HC14**	★**1066** 839-16
	Hitachi	HD74HC14	839-17
	Mitsubishi	M74HC14	839-18
	Motorola	**MC74HC14**	★**1125** 839-20
	National	MM74HC14	839-54
	Panasonic	MN74HC14	839-21
	RCA	**CD74HC14**	★**1149** 839-23
	SPI	SP74HC14	839-24
	SGS	M74HC14	839-25
			(Continued)
74HC14	Sharp	LR74HC14	839-26
	Signetics	**74HC14**	★**1156** 839-27
	TI	SN74HC14	839-29
	Toshiba	**TC74HC14**	★**1363** 811-82
	Universal	US74HC14	839-30
74HC145			
	Goldstar	**GD74HC145**	★**1066** 817-7
74HC147			
	Fairchild	74HC147	833-150 833-154
	Hitachi	HD74HC147	819-43
	Mitsubishi	M74HC147	808-50
	Motorola	**MC74HC147**	★**1131** 819-45
	National	MM74HC147	833-152 833-156
	RCA	**CD74HC147**	★**1150** 819-47
	SPI	SP74HC147	819-48
	SGS	M74HC147	819-49
	Signetics	**74HC147**	★**1157** 819-50
	SSS	SS74HC147	819-52
	TI	SN74HC147	808-51
	Toshiba	**TC74HC147**	★**1363** 842-102
	Universal	US74HC147	819-53
74HC148			
	Hitachi	HD74HC148	808-61
	Mitsubishi	M74HC148	808-62
	SPI	SP74HC148	819-38
	TI	SN74HC148	808-63
	Toshiba	**TC74HC148**	★**1363** 819-39
74HC149			
	National	MM74HC149	817-170
74HC151			
	Fairchild	74HC151	833-29
	Goldstar	**GD74HC151**	★**1066** 833-30
	Hitachi	HD74HC151	833-31
	Mitsubishi	M74HC151	833-32
	Motorola	**MC74HC151**	★**1129** 833-34
	National	MM74HC151	833-36
	Panasonic	MN74HC151	833-37
	RCA	**CD74HC151**	★**1150** 833-39
	SPI	SP74HC151	833-40
	SGS	M74HC151	833-41
	Sharp	LR74HC151	833-42
	Signetics	**74HC151**	★**1157** 833-43
	TI	SN74HC151	833-45
	Toshiba	**TC74HC151**	★**1363** 833-46
	Universal	US74HC151	833-47
74HC152			
	Hitachi	HD74HC152	833-53
	TI	SN74HC152	833-55
74HC153			
	Fairchild	74HC153	833-80
	Goldstar	**GD74HC153**	★**1066** 833-83
	Hitachi	HD74HC153	832-19
	Mitsubishi	M74HC153	831-139
	Motorola	**MC74HC153**	★**1129** 831-141
	National	MM74HC153	832-21
	RCA	**CD74HC153**	★**1150** 832-23
	SPI	SP74HC153	831-142
	SGS	M74HC153	831-143
	Signetics	**74HC153**	★**1157** 833-86
	TI	SN74HC153	831-145
	Toshiba	**TC74HC153**	★**1363** 833-92
	Universal	US74HC153	832-24
74HC154			
	Fairchild	74HC154	819-18
	Hitachi	HD74HC154	819-20
	Mitsubishi	M74HC154	819-21
			(Continued)
74HC154			
	Motorola	**MC74HC154**	★**1130** 819-23
	National	MM74HC154	819-25
	Panasonic	MN74HC154	819-26
	RCA	**CD74HC154**	★**1150** 819-28
	SGS	M74HC154	819-29
	Signetics	**74HC154**	★**1157** 819-30
	TI	SN74HC154	819-31
	Toshiba	**TC74HC154**	★**1363** 819-32
	Universal	US74HC154	819-33
74HC155			
	Goldstar	**GD74HC155**	★**1066** 817-85
	Hitachi	HD74HC155	817-86
	Motorola	MC74HC155	817-88
	Toshiba	**TC74HC155**	★**1363** 817-89
74HC157			
	Goldstar	**GD74HC157**	★**1066** 832-61
	Hitachi	HD74HC157	832-62
	Mitsubishi	M74HC157	832-63
	Motorola	**MC74HC157**	★**1129** 832-65
	National	MM74HC157	832-68
	Panasonic	MN74HC157	832-70
	RCA	**CD74HC157**	★**1150** 832-72
	SPI	SP74HC157	832-73
	SGS	M74HC157	832-74
	Sharp	LR74HC157	832-75
	Signetics	**74HC157**	★**1157** 832-76
	SSS	SS74HC157	832-78
	TI	SN74HC157	832-80
	Toshiba	**TC74HC157**	★**1363** 832-81
	Universal	US74HC157	832-82
74HC158			
	Goldstar	**GD74HC158**	★**1066** 832-101
	Hitachi	HD74HC158	832-102
	Mitsubishi	M74HC158	832-103
	Motorola	**MC74HC158**	★**1129** 832-105
	National	MM74HC158	832-69
	Panasonic	MN74HC158	832-106
	RCA	**CD74HC158**	★**1150** 832-108
	SPI	SP74HC158	832-109
	SGS	M74HC158	832-110
	Sharp	LR74HC158	832-111
	Signetics	**74HC158**	★**1157** 832-112
	TI	SN74HC158	832-115
	Toshiba	**TC74HC158**	★**1363** 832-116
	Universal	US74HC158	832-117
74HC160			
	Fairchild	74HC160	814-167
	Hitachi	HD74HC160	814-168
	Mitsubishi	M74HC160	814-169
	Motorola	**MC74HC160**	★**1127** 814-171
	National	MM74HC160	814-173
	Panasonic	MN74HC160	814-174
	RCA	**CD74HC160**	★**1150** 814-176
	SPI	SP74HC160	814-177
	SGS	M74HC160	814-178
	Sharp	LR74HC160	814-179
	Signetics	**74HC160**	★**1157** 832-113
	TI	SN74HC160	814-181
	Toshiba	**TC74HC160**	★**1363** 814-182
	Universal	US74HC160	814-183
74HC161			
	Goldstar	**GD74HC161A**	★**1066** 811-177
	Hitachi	HD74HC161	811-178
	Mitsubishi	M74HC161	811-179
			(Continued)

¶ Indicates page number in Application Note Directory.
★ Indicates additional data is provided on the page noted.

Base Number	Source	Device	Page-Line
74HC161			
	Motorola	**MC74HC161**	★1127 811-181
	National	MM74HC161	811-183
	Panasonic	MN74HC161	811-184
	RCA	**CD74HC161**	★1150 811-186
	SPI	SP74HC161	811-187
	SGS	M74HC161	811-188
	Sharp	LR74HC161	811-189
	Signetics	**74HC161**	★1157 811-190
	SSS	74HC161	811-191
		SS74HC161	812-1
	TI	SN74HC161	812-3
	Toshiba	**TC74HC161**	★1363 812-4
	Universal	US74HC161	812-5
74HC162			
	Fairchild	74HC162	814-118
	Hitachi	HD74HC162	814-119
	Mitsubishi	M74HC162	814-120
	Motorola	**MC74HC162**	★1127 814-122
	National	MM74HC162	814-124
	RCA	**CD74HC162**	★1150 814-126
	SPI	SP74HC162	814-127
	SGS	M74HC162	814-128
	Sharp	LR74HC162	814-129
	Signetics	**74HC162**	★1157 814-130
	TI	SN74HC162	814-132
	Toshiba	**TC74HC162**	★1363 814-133
	Universal	US74HC162	814-134
74HC163			
	Fairchild	74HC163	811-122
	Goldstar	**GD74HC163**	★1066 811-123
	Hitachi	HD74HC163	811-124
	Mitsubishi	M74HC163	811-125
	Motorola	**MC74HC163**	★1127 811-127
	National	MM74HC163	811-129
	Panasonic	MN74HC163	811-130
	RCA	**CD74HC163**	★1150 811-132
	SPI	SP74HC163	811-133
	SGS	M74HC163	811-134
	Sharp	LR74HC163	811-135
	Signetics	**74HC163**	★1157 811-136
	SSS	SS74HC163	811-138
	TI	SN74HC163	811-140
	Toshiba	**TC74HC163**	★1363 811-141
	Universal	US74HC163	811-142
74HC164			
	Fairchild	74HC164	836-36
	Goldstar	**GD74HC164**	★1066 836-37
	Hitachi	HD74HC164	836-38
	Mitsubishi	M74HC164	836-39
	Motorola	**MC74HC164**	★1128 836-41 3855-71
	National	MM74HC164	836-43
	RCA	**CD74HC164**	★1149 836-45
	SPI	SP74HC164	836-46
	SGS	M74HC164	836-47
	Sharp	LR74HC164	836-48
	Signetics	**74HC164**	★1157 836-49
	TI	SN74HC164	836-51
	Toshiba	**TC74HC164**	★1363 836-52
	Universal	US74HC164	836-53
74HC165			
	Fairchild	74HC165	835-182
	Goldstar	**GD74HC165**	★1066 835-183
	Hitachi	HD74HC165	835-184
	Mitsubishi	M74HC165	835-185
	Motorola	**MC74HC165**	★1128
			(Continued)
74HC165			
	Motorola	MC74HC165	835-187 3855-74
	National	MM74HC165	836-1
	RCA	**CD74HC165**	★1149 836-3
	SPI	SP74HC165	836-4
	SGS	M74HC165	836-5
	Sharp	LR74HC165	836-6
	Signetics	**74HC165**	★1157 836-7
	TI	SN74HC165	836-10
	Toshiba	**TC74HC165**	★1363 836-11
	Universal	US74HC165	836-12
74HC166			
	Hitachi	HD74HC166	836-70
	Mitsubishi	M74HC166	836-71
	Motorola	MC74HC166	836-73
	National	MM74HC166	836-75
	RCA	**CD74HC166**	★1149 836-77
	SGS	M74HC166	836-78
	Signetics	**74HC166**	★1157 836-8
	TI	SN74HC166	836-80
	Toshiba	**TC74HC166**	★1363 836-82
74HC167			
	SPI	SP74HC167	838-22
74HC168			
	Motorola	MC74HC168	812-52
74HC169			
	Motorola	MC74HC169	813-28
	National	MM74HC169	813-30
74HC173			
	Fairchild	74HC173	820-135
	Goldstar	**GD74HC173**	★1066 820-136
	Hitachi	HD74HC173	820-137
	Mitsubishi	M74HC173	820-138
	Motorola	**MC74HC173**	★1126 820-140
	National	MM74HC173	820-142
	RCA	**CD74HC173**	★1149 820-144
	SPI	SP74HC173	820-145
	SGS	M74HC173	820-146
	Sharp	LR74HC173	820-147
	Signetics	**74HC173**	★1157 820-148
	TI	SN74HC173	820-150
	Toshiba	**TC74HC173**	★1363 820-151
	Universal	US74HC173	820-152
74HC174			
	Goldstar	**GD74HC174**	★1066 821-1
	Hitachi	HD74HC174	821-2
	Mitsubishi	M74HC174	821-3
	Motorola	**MC74HC174**	★1126 821-5
	National	MM74HC174	821-7
	Panasonic	MN74HC174	821-8
	RCA	**CD74HC174**	★1149 821-10
	SPI	SP74HC174	821-11
	SGS	M74HC174	821-12
	Sharp	LR74HC174	821-13
	Signetics	74HC174	821-14
	SSS	SS74HC174	821-16
	TI	SN74HC174	821-18
	Toshiba	**TC74HC174**	★1363 821-19
	Universal	US74HC174	821-20
74HC175			
	Fairchild	74HC175	820-90
	Goldstar	**GD74HC175**	★1066 820-91
	Hitachi	HD74HC175	820-92
	Mitsubishi	M74HC175	820-93
	Motorola	**MC74HC175**	★1126 820-95
	National	MM74HC175	820-97
	RCA	**CD74HC175**	★1149 820-99
			(Continued)
74HC175			
	SPI	SP74HC175	820-100
	SGS	M74HC175	820-101
	Sharp	LR74HC175	820-102
	Signetics	**74HC175**	★1157 820-103
	SSS	SS74HC175	820-105
	TI	SN74HC175	820-107
	Toshiba	**TC74HC175**	★1363 820-108
	Universal	US74HC175	820-109
74HC176			
	SPI	SP74HC176	814-113
74HC177			
	SPI	SP74HC177	811-115
74HC180			
	TI	SN74HC180	842-93
74HC181			
	Hitachi	HD74HC181	806-158
	Motorola	**MC74HC181**	★1132 806-161
	National	MM74HC181	806-163
	RCA	**CD74HC181**	★1150 806-165
	SGS	M74HC181	806-166
	Signetics	**74HC181**	★1157 806-167
	TI	SN74HC181	806-168
	Toshiba	**TC74HC181**	★1363 806-171
74HC182			
	Hitachi	HD74HC182	806-86
	National	MM74HC182	807-12
	RCA	**CD74HC182**	★1150 806-88
	SPI	SP74HC182	807-13
	SGS	M74HC182	807-14
	Signetics	**74HC182**	★1157 806-89
	TI	SN74HC182	806-90
	Toshiba	**TC74HC182**	★1363 806-91
74HC189			
	TI	SN74HC189	831-100
74HC190			
	Hitachi	HD74HC190	815-126
	Motorola	MC74HC190	815-129
	National	MM74HC190	815-131
	RCA	**CD74HC190**	★1150 815-133
	SGS	M74HC190	815-134
	Signetics	**74HC190**	★1157 815-84
	TI	SN74HC190	815-136
	Toshiba	**TC74HC190**	★1363 815-137
	Universal	US74HC190	815-138
74HC191			
	Hitachi	HD74HC191	812-47
	Motorola	MC74HC191	812-53
	National	MM74HC191	812-57
	RCA	**CD74HC191**	★1150 812-63
	SGS	M74HC191	812-67
	Signetics	**74HC191**	★1157 812-69
	TI	SN74HC191	813-22
	Toshiba	**TC74HC191**	★1363 813-24
	Universal	US74HC191	812-73
74HC192			
	Fairchild	74HC192	815-30
	Hitachi	HD74HC192	815-31
	Mitsubishi	M74HC192	815-32
	Motorola	**MC74HC192**	★1127 815-34
	National	MM74HC192	815-36
	Panasonic	MN74HC192	815-37
	RCA	**CD74HC192**	★1150 815-39
	SPI	SP74HC192	815-40
	SGS	M74HC192	815-41
	Signetics	**74HC192**	★1157 815-42
	SSS	SS74HC192	815-44
	TI	SN74HC192	815-46
			(Continued)
74HC192			
	Toshiba	**TC74HC192**	★1363 815-47
	Universal	US74HC192	815-48
74HC193			
	Fairchild	74HC193	812-43
	Goldstar	**GD74HC193**	★1066 812-46
	Hitachi	HD74HC193	812-48
	Mitsubishi	M74HC193	813-19
	Motorola	**MC74HC193**	★1127 812-54
	National	MM74HC193	812-58
	Panasonic	MN74HC193	812-59
	RCA	**CD74HC193**	★1150 812-64
	SPI	SP74HC193	812-66
	SGS	M74HC193	812-68
	Signetics	**74HC193**	★1157 812-70
	TI	SN74HC193	813-23
	Toshiba	**TC74HC193**	★1363 812-72
	Universal	US74HC193	812-74
74HC194			
	Hitachi	HD74HC194	835-29
	Mitsubishi	M74HC194	835-30
	Motorola	**MC74HC194**	★1128 835-32 3854-26
	National	MM74HC194	835-34
	RCA	**CD74HC194**	★1149 835-36
	SPI	SP74HC194	835-37
	SGS	M74HC194	835-38
	Sharp	LR74HC194	835-39
	Signetics	**74HC194**	★1157 835-40
	TI	SN74HC194	835-42
	Toshiba	**TC74HC194**	★1363 835-43
	Universal	US74HC194	835-44
74HC195			
	Fairchild	74HC195	835-92
	Hitachi	HD74HC195	835-93
	Mitsubishi	M74HC195	835-95
	Motorola	**MC74HC195**	★1128 835-97 3854-27
	National	MM74HC195	835-99
	RCA	**CD74HC195**	★1149 835-101
	SPI	SP74HC195	835-102
	SGS	M74HC195	835-103
	Sharp	LR74HC195	835-104
	Signetics	**74HC195**	★1157 835-105
	TI	SN74HC195	835-107
	Toshiba	**TC74HC195**	★1363 835-108
	Universal	US74HC195	835-109
74HC198			
	Signetics	**74HC198**	★1157 835-156
74HC20	Fairchild	74HC20	824-119
	Goldstar	**GD74HC20**	★1066 824-120
	Hitachi	HD74HC20	824-122
	Mitsubishi	M74HC20	824-123
	Motorola	**MC74HC20**	★1122 824-125
	National	MM74HC20	824-188
	Panasonic	MN74HC20	824-126
	RCA	**CD74HC20**	★1149 824-128
	SPI	SP74HC20	824-129
	SGS	M74HC20	824-130
	Sharp	LR74HC20	824-131
	Signetics	**74HC20**	★1156 824-132
	TI	SN74HC20	824-134
	Toshiba	**TC74HC20**	★1363 824-135
	Universal	US74HC20	824-136
74HC21	**Goldstar**	**GD74HC21**	★1066 823-162
			(Continued)

Arranged alphanumerically from left to right.

PART NUMBER INDEX

Base Number	Source	Device	Page-Line
74HC21	Hitachi	HD74HC21	823-163
	RCA	**CD74HC21**	**★1149** 823-165
	Signetics	**74HC21**	**★1156** 823-166
	TI	SN74HC21	823-168
	Toshiba	**TC74HC21**	**★1363** 823-169
	Universal	US74HC21	823-170
74HC221			
	Fairchild	74HC221	834-6
	Hitachi	HD74HC221	834-8
	Mitsubishi	M74HC221	834-12
	Motorola	**MC74HC221A**	**★1131** 834-16
	National	MM74HC221A	834-22
	Panasonic	MN74HC221	834-25
	RCA	**CD74HC221**	**★1150** 834-29
	Signetics	74HC221	834-34
	Toshiba	**TC74HC221**	**★1363** 834-38
	Universal	US74HC221	834-41
74HC227			
	Signetics	**74HC227**	**★1157** 817-175
74HC237			
	Hitachi	HD74HC237	818-101
	Mitsubishi	M74HC237	818-83
	Motorola	MC74HC237	818-105
	National	MM74HC237	818-109
	RCA	**CD74HC237**	**★1150** 818-113
	Samsung	74HC237	818-115
	SGS	M74HC237	818-117
	SSS	SS74HC237	818-85
	TI	SN74HC237	818-88
	Toshiba	**TC74HC237**	**★1363** 818-90
	Universal	US74HC237	818-125
74HC238			
	Hitachi	HD74HC238	818-10
	RCA	**CD74HC238**	**★1150** 818-21
	SPI	SP74HC238	817-171
	Signetics	**74HC238**	**★1157** 818-29
	SSS	SS74HC238	818-33
	TI	SN74HC238	818-89
	Toshiba	**TC74HC238**	**★1363** 818-91
74HC239			
	Motorola	MC74HC239	817-109
	SPI	SP74HC239	817-117
	SSS	SS74HC239	817-124
	TI	SN74HC239	817-127
74HC240			
	Fairchild	74HC240	839-72
	Goldstar	**GD74HC240**	**★1066** 839-73
	Hitachi	HD74HC240	839-74
	IDT	74HC240	839-68
	Mitsubishi	M74HC240	839-104
	Motorola	**MC74HC240**	**★1124** 839-78
	National	MM74HC240	839-80
	Panasonic	MN74HC240	839-81
	RCA	**CD74HC240**	**★1149** 839-83
	Samsung	74HC240	839-84
	SPI	SP74HC240	839-85
	SGS	M74HC240	839-86
	Sharp	LR74HC240	839-87
	Signetics	**74HC240**	**★1157** 839-89
	SSS	SS74HC240	839-91
	TI	SN74HC240	839-93
	Toshiba	**TC74HC240**	**★1363** 839-94
	Universal	US74HC240	839-95
74HC241			
	Fairchild	74HC241	839-148
	Goldstar	**GD74HC241**	**★1066** 839-149
	Hitachi	HD74HC241	839-150
	Mitsubishi	M74HC241	840-53
			(Continued)
74HC241			
	Motorola	**MC74HC241**	**★1124** 839-153
	National	MM74HC241	839-154
	Panasonic	MN74HC241	839-155
	RCA	**CD74HC241**	**★1149** 839-157
	Samsung	74HC241	839-158
	SPI	SP74HC241	839-159
	SGS	M74HC241	839-160
	Sharp	LR74HC241	840-50
	Signetics	**74HC241**	**★1157** 839-162
	SSS	SS74HC241	839-164
	TI	SN74HC241	840-52
	Toshiba	**TC74HC241**	**★1363** 839-169
	Universal	US74HC241	839-170
74HC242			
	Fairchild	74HC242	838-82
	Hitachi	HD74HC242	838-83
	Mitsubishi	M74HC242	838-84
	Motorola	**MC74HC242**	**★1124** 838-86
	National	MM74HC242	838-88
	Panasonic	MN74HC242	838-89
	RCA	**CD74HC242**	**★1149** 838-91
	SPI	SP74HC242	838-68
	SGS	M74HC242	838-92
	Sharp	LR74HC242	838-94
	Signetics	**74HC242**	**★1158** 838-95
	SSS	SS74HC242	838-98
	TI	SN74HC242	838-101
	Toshiba	**TC74HC242**	**★1363** 838-69
	Universal	US74HC242	838-102
74HC243			
	Fairchild	74HC243	838-118
	Hitachi	HD74HC243	838-119
	Mitsubishi	M74HC243	838-70
	Motorola	**MC74HC243**	**★1124** 838-121
	National	MM74HC243	838-72
	Panasonic	MN74HC243	838-122
	RCA	**CD74HC243**	**★1149** 838-124
	SPI	SP74HC243	838-125
	SGS	M74HC243	838-93
	Sharp	LR74HC243	838-73
	Signetics	**74HC243**	**★1158** 838-126
	SSS	SS74HC243	838-99
	TI	SN74HC243	838-75
	Toshiba	**TC74HC243**	**★1363** 838-76
	Universal	US74HC243	838-128
74HC244			
	Fairchild	74HC244	840-69
	Goldstar	**GD74HC244**	**★1066** 840-70
	Hitachi	HD74HC244	840-71
	IDT	74HC244	839-143
	Mitsubishi	M74HC244	839-187
	Motorola	**MC74HC244**	**★1124** 840-73
	National	MM74HC244	840-75
	Panasonic	MN74HC244	840-76
	RCA	**CD74HC244**	**★1149** 840-78
	Samsung	74HC244	840-79
	SPI	SP74HC244	840-80
	SGS	M74HC244	840-81
	Sharp	LR74HC244	840-82
	Signetics	**74HC244**	**★1158** 840-84
	SSS	SS74HC244	840-86
	TeledyneS	TC74HC244	839-165
	TI	SN74HC244	839-168
	Toshiba	**TC74HC244**	**★1363** 840-91
	Universal	US74HC244	839-171
74HC245			
	Fairchild	74HC245	841-118
	Goldstar	**GD74HC245**	**★1066**
			(Continued)
74HC245			
	Goldstar	GD74HC245	841-119
	Hitachi	HD74HC245	841-120
	IDT	74HC245	841-111
	Mitsubishi	M74HC245	841-159
	Motorola	**MC74HC245**	**★1124** 841-128
	National	MM74HC245	836-171
	Panasonic	MN74HC245	841-129
	RCA	**CD74HC245**	**★1149** 841-131
	Samsung	74HC245	841-132
	SGS	M74HC245	841-133
	Sharp	LR74HC245	841-134
	Signetics	**74HC245**	**★1158** 841-135
	SSS	SS74HC245	841-137
	TI	SN74HC245	841-142
	Toshiba	**TC74HC245**	**★1363** 841-146
	Universal	US74HC245	841-149
74HC251			
	Fairchild	74HC251	833-81
	Hitachi	HD74HC251	833-104
	Mitsubishi	M74HC251	833-84
	Motorola	**MC74HC251**	**★1129** 833-110
	National	MM74HC251	833-76
	RCA	**CD74HC251**	**★1150** 833-116
	SPI	SP74HC251	833-119
	SGS	M74HC251	833-120
	Sharp	LR74HC251	833-85
	Signetics	**74HC251**	**★1158** 833-87
	SSS	SS74HC251	833-127
	TI	SN74HC251	833-89
	Toshiba	**TC74HC251**	**★1363** 833-93
	Universal	US74HC251	833-131
74HC253			
	Fairchild	74HC253	832-12
	Hitachi	HD74HC253	832-35
	Mitsubishi	M74HC253	832-13
	Motorola	**MC74HC253**	**★1129** 832-38
	National	MM74HC253	832-40
	RCA	**CD74HC253**	**★1150** 832-42
	SPI	SP74HC253	832-43
	SGS	M74HC253	832-44
	Signetics	**74HC253**	**★1158** 832-14
	SSS	SS74HC253	832-46
	TI	SN74HC253	832-16
	Toshiba	**TC74HC253**	**★1363** 832-17
74HC257			
	Fairchild	74HC257	832-136
	Goldstar	**GD74HC257**	**★1066** 832-137
	Hitachi	HD74HC257	832-36
	Mitsubishi	M74HC257	832-138
	Motorola	**MC74HC257**	**★1129** 832-140
	National	MM74HC257	832-142
	RCA	**CD74HC257**	**★1150** 832-144
	SPI	SP74HC257	832-145
	SGS	M74HC257	832-146
	Sharp	LR74HC257	832-147
	Signetics	**74HC257**	**★1158** 832-148
	TI	SN74HC257	832-150
	Toshiba	**TC74HC257**	**★1363** 832-151
	Universal	US74HC257	832-152
74HC258			
	Hitachi	HD74HC258	832-168
	Motorola	MC74HC258	832-170
	RCA	**CD74HC258**	**★1150** 832-172
	SPI	SP74HC258	832-173
	Signetics	**74HC258**	**★1158** 832-174
	TI	SN74HC258	832-176
			(Continued)
74HC258			
	Toshiba	**TC74HC258**	**★1363** 832-177
	Universal	US74HC258	832-178
74HC259			
	Fairchild	74HC259	830-171
	Goldstar	**GD74HC259**	**★1066** 830-172
	Hitachi	HD74HC259	830-173
	Mitsubishi	M74HC259	830-174
	Motorola	**MC74HC259**	**★1126** 830-176
	National	MM74HC259	830-179
	RCA	**CD74HC259**	**★1150** 830-182
	SPI	SP74HC259	830-183
	SGS	M74HC259	830-184
	Sharp	LR74HC259	830-185
	Signetics	**74HC259**	**★1158** 830-186
	SSS	SS74HC259	830-188
	TI	SN74HC259	830-191
	Toshiba	**TC74HC259**	**★1363** 830-193
	Universal	US74HC259	830-194
74HC266			
	Hitachi	HD74HC266	828-94
	Mitsubishi	M74HC266	828-95
	Motorola	**MC74HC266**	**★1123** 828-97
	National	MM74HC266	826-90
	Panasonic	MN74HC266	828-98
	RCA	CD74HC266	828-101
	SPI	SP74HC266	828-103
	SGS	M74HC266	828-104
	Sharp	LR74HC266	828-105
	Signetics	**74HC266**	**★1158** 828-106
	TI	SN74HC266	828-108
	Toshiba	TC74HC266	828-110
	Universal	US74HC266	828-111
74HC27	Fairchild	74HC27	827-58
	Goldstar	**GD74HC27**	**★1066** 827-59
	Hitachi	HD74HC27	827-60
	Mitsubishi	M74HC27	827-61
	Motorola	**MC74HC27**	**★1122** 827-63
	National	MM74HC27	827-65
	Panasonic	MN74HC27	827-66
	RCA	**CD74HC27**	**★1149** 827-68
	SPI	SP74HC27	827-69
	SGS	M74HC27	827-70
	Sharp	LR74HC27	827-71
	Signetics	**74HC27**	**★1156** 827-72
	SSS	SS74HC27	827-74
	TI	SN74HC27	827-76
	Toshiba	**TC74HC27**	**★1363** 827-77
74HC273			
	Fairchild	74HC273	821-57
	Goldstar	**GD74HC273**	**★1066** 821-58
	Hitachi	HD74HC273	821-59
	IDT	74HC273	821-53
	Mitsubishi	M74HC273	821-62
	Motorola	**MC74HC273**	**★1126** 821-64
	National	MM74HC273	821-66
	Panasonic	MN74HC273	821-67
	RCA	**CD74HC273**	**★1149** 821-69
	SPI	SP74HC273	821-70
	SGS	M74HC273	821-71
	Signetics	**74HC273**	**★1158** 821-72
	SSS	SS74HC273	821-74
	TI	SN74HC273	821-76
	Toshiba	**TC74HC273**	**★1363** 821-77
	Universal	US74HC273	821-78
74HC279			
	Toshiba	**TC74HC279**	**★1363** 829-90

¶ Indicates page number in Application Note Directory.
★ Indicates additional data is provided on the page noted.

Base Number	Source	Device	Page-Line
74HC280			
	Fairchild	74HC280	808-35
	Hitachi	HD74HC280	808-36
	Motorola	**MC74HC280**	**★1132** 808-38
	National	MM74HC280	808-40
	RCA	**CD74HC280**	**★1150** 808-42
	SPI	SP74HC280	808-43
	SGS	M74HC280	808-44
	Sharp	LR74HC280	842-90
	Signetics	**74HC280**	**★1158** 808-45
	TI	SN74HC280	842-94
	Toshiba	**TC74HC280**	**★1363** 842-95
74HC283			
	Fairchild	74HC283	806-36
	Goldstar	**GD74HC283**	**★1066** 806-37
	Hitachi	HD74HC283	806-38
	Mitsubishi	M74HC283	806-40
	Motorola	**MC74HC283**	**★1132** 806-42
	National	MM74HC283	806-44
	RCA	**CD74HC283**	**★1150** 806-46
	SGS	M74HC283	806-48
	Signetics	**74HC283**	**★1158** 806-49
	TI	SN74HC283	806-50
	Toshiba	**TC74HC283**	**★1363** 806-51
	Universal	US74HC283	806-52
74HC292			
	Hitachi	HD74HC292	837-144
	Motorola	MC74HC292	837-136
	National	MM74HC292	837-140
	SGS	M74HC292	837-142
	Toshiba	TC74HC292	837-146
74HC294			
	Hitachi	HD74HC294	837-145
	Motorola	MC74HC294	837-137
	National	MM74HC294	837-141
	SGS	M74HC294	837-143
	Toshiba	TC74HC294	837-147
74HC297			
	RCA	**CD74HC297**	**★1150** 3375-16
	Signetics	**74HC297**	**★1158** 3375-20
74HC298			
	Hitachi	HD74HC298	833-2
	Mitsubishi	M74HC298	833-3
	Motorola	MC74HC298	833-5
	National	MM74HC298	833-7
	SPI	SP74HC298	833-8
	SGS	M74HC298	833-9
	TI	SN74HC298	833-11
	Toshiba	**TC74HC298**	**★1363** 833-12
	Universal	US74HC298	833-13
74HC299			
	Fairchild	74HC299	836-147
	Hitachi	HD74HC299	836-148
	Mitsubishi	M74HC299	836-151
	Motorola	**MC74HC299**	**★1129** 836-153
	National	MM74HC299	836-155
	RCA	**CD74HC299**	**★1149** 836-157
	SGS	M74HC299	836-158
	Signetics	**74HC299**	**★1158** 836-159
	TI	SN74HC299	836-160
	Toshiba	**TC74HC299**	**★1363** 836-161
	Universal	US74HC299	836-162
74HC30	Fairchild	74HC30	825-147
	Goldstar	**GD74HC30**	**★1066** 825-148
	Hitachi	HD74HC30	825-149
	Mitsubishi	M74HC30	825-150
	Motorola	**MC74HC30**	**★1122** 825-152
	National	MM74HC30	825-154 (Continued)
74HC30	Panasonic	MN74HC30	825-155
	RCA	**CD74HC30**	**★1149** 825-157
	SPI	SP74HC30	825-158
	SGS	M74HC30	825-159
	Sharp	LR74HC30	825-160
	Signetics	**74HC30**	**★1156** 825-161
	TI	SN74HC30	825-163
	Toshiba	**TC74HC30**	**★1363** 825-164
	Universal	US74HC30	825-165
74HC32	Fairchild	74HC32	826-129
	Goldstar	**GD74HC32**	**★1066** 826-130
	Hitachi	HD74HC32	826-131
	Mitsubishi	M74HC32	826-132
	Motorola	**MC74HC32**	**★1122** 826-134
	National	MM74HC32	826-136
	Panasonic	MN74HC32	826-137
	RCA	**CD74HC32**	**★1149** 826-139
	SPI	SP74HC32	826-140
	SGS	M74HC32	826-141
	Sharp	LR74HC32	826-142
	Signetics	**74HC32**	**★1156** 826-143
	TI	SN74HC32	826-145
	Toshiba	**TC74HC32**	**★1363** 826-147
	Universal	US74HC32	826-148
74HC322			
	Goldstar	**GD74HC322**	**★1066** 836-69
	TI	SN74HC322	836-81
74HC323			
	Hitachi	HD74HC323	836-97
	National	MM74HC323	836-172
	TI	SN74HC323	836-106
	Toshiba	**TC74HC323**	**★1363** 836-109
74HC352			
	Hitachi	HD74HC352	832-30
	TI	SN74HC352	832-32
74HC353			
	Hitachi	HD74HC353	832-53
	TI	SN74HC353	832-55
74HC354			
	Hitachi	HD74HC354	833-105
	Motorola	**MC74HC354**	**★1130** 833-111
	National	MM74HC354	833-100
	RCA	**CD74HC354**	**★1150** 833-117
	SGS	M74HC354	833-121
	Signetics	**74HC354**	**★1158** 833-123
	SSS	SS74HC354	833-128
	TI	SN74HC354	833-90
	Toshiba	**TC74HC354**	**★1363** 833-129
	Universal	US74HC354	833-132
74HC356			
	Hitachi	HD74HC356	833-106
	Motorola	**MC74HC356**	**★1130** 833-112
	National	MM74HC356	833-101
	RCA	**CD74HC356**	**★1150** 833-118
	SGS	M74HC356	833-122
	Signetics	**74HC356**	**★1158** 833-124
	TI	SN74HC356	833-91
	Toshiba	**TC74HC356**	**★1363** 833-130
	Universal	US74HC356	833-133
74HC36	Motorola	MC74HC36	827-126
	TI	SN74HC36	827-141
74HC365			
	Fairchild	74HC365	809-115
	Goldstar	**GD74HC365**	**★1066** 809-117
	Hitachi	HD74HC365	809-119
	Mitsubishi	M74HC365	809-121
	Motorola	**MC74HC365**	**★1124** (Continued)
74HC365			
	Motorola	MC74HC365	809-124
	National	MM74HC365	809-128
	Panasonic	MN74HC365	809-130
	RCA	**CD74HC365**	**★1149** 809-134
	SPI	SP74HC365	809-136
	SGS	M74HC365	809-138
	Signetics	**74HC365**	**★1158** 809-140
	SSS	SS74HC365	809-143
	TI	SN74HC365	809-145
	Toshiba	**TC74HC365**	**★1363** 809-146
	Universal	US74HC365	809-148
74HC366			
	Fairchild	74HC366	809-185
	Hitachi	HD74HC366	809-187
	Mitsubishi	M74HC366	809-189
	Motorola	**MC74HC366**	**★1124** 809-193
	National	MM74HC366	810-2
	Panasonic	MN74HC366	810-4
	RCA	**CD74HC366**	**★1149** 810-8
	SPI	SP74HC366	810-10
	SGS	M74HC366	810-11
	Signetics	**74HC366**	**★1158** 810-13
	TI	SN74HC366	810-17
	Toshiba	**TC74HC366**	**★1363** 810-19
	Universal	US74HC366	810-21
74HC367			
	Fairchild	74HC367	809-116
	Goldstar	**GD74HC367**	**★1066** 809-118
	Hitachi	HD74HC367	809-120
	Mitsubishi	M74HC367	839-4
	Motorola	**MC74HC367**	**★1124** 809-125
	National	MM74HC367	809-129
	Panasonic	MN74HC367	809-131
	RCA	**CD74HC367**	**★1149** 809-135
	SPI	SP74HC367	809-137
	SGS	M74HC367	809-139
	Signetics	**74HC367**	**★1158** 809-141
	TI	SN74HC367	839-6
	Toshiba	**TC74HC367**	**★1363** 809-147
	Universal	US74HC367	809-149
74HC368			
	Fairchild	74HC368	809-186
	Hitachi	HD74HC368	809-188
	Mitsubishi	M74HC368	809-190
	Motorola	**MC74HC368**	**★1124** 809-194
	National	MM74HC368	810-3
	Panasonic	MN74HC368	810-5
	RCA	**CD74HC368**	**★1149** 810-9
	SGS	M74HC368	810-12
	Signetics	**74HC368**	**★1158** 810-14
	TI	SN74HC368	810-18
	Toshiba	**TC74HC368**	**★1363** 810-20
	Universal	US74HC368	810-22
74HC373			
	Fairchild	74HC373	829-118
	Goldstar	**GD74HC373**	**★1066** 829-120
	Hitachi	HD74HC373	829-121
	IDT	74HC373	829-113
	Mitsubishi	M74HC373	829-174
	Motorola	**MC74HC373**	**★1126** 829-127
	National	MM74HC373	829-131
	Panasonic	MN74HC373	829-133
	RCA	**CD74HC373**	**★1150** 829-136
	Samsung	74HC373	829-138
	SPI	SP74HC373	829-140
	SGS	M74HC373	829-142 (Continued)
74HC373			
	Sharp	LR74HC373	829-144
	Signetics	**74HC373**	**★1158** 829-145
	SSS	SS74HC373	829-149
	TI	SN74HC373	829-153
	Toshiba	**TC74HC373**	**★1363** 829-155
	Universal	US74HC373	829-157
74HC374			
	Fairchild	74HC374	822-57
	Goldstar	**GD74HC374**	**★1066** 822-59
	Hitachi	HD74HC374	822-60
	IDT	74HC374	822-52
	Mitsubishi	M74HC374	822-64
	Motorola	**MC74HC374**	**★1126** 822-67
	National	MM74HC374	822-71
	Panasonic	MN74HC374	822-73
	RCA	**CD74HC374**	**★1149** 822-76
	Samsung	74HC374	822-78
	SPI	SP74HC374	822-80
	SGS	M74HC374	822-82
	Sharp	LR74HC374	822-84
	Signetics	**74HC374**	**★1158** 822-85
	SSS	SS74HC374	822-89
	TI	SN74HC374	822-93
	Toshiba	**TC74HC374**	**★1363** 822-95
	Universal	US74HC374	822-97
74HC375			
	Hitachi	HD74HC375	829-23
	Mitsubishi	M74HC375	829-24
	TI	SN74HC375	829-28
	Toshiba	**TC74HC375**	**★1363** 829-29
74HC377			
	Goldstar	**GD74HC377**	**★1066** 821-105
	Hitachi	HD74HC377	821-106
	IDT	74HC377	821-100
	RCA	**CD74HC377**	**★1149** 821-110
	Signetics	**74HC377**	**★1158** 821-111
	SSS	SS74HC377	821-113
	TI	SN74HC377	821-115
	Toshiba	**TC74HC377**	**★1363** 821-116
	Universal	US74HC377	821-117
74HC378			
	TI	SN74HC378	821-49
74HC379			
	TI	SN74HC379	820-130
74HC381			
	TI	SN74HC381	806-169
74HC382			
	TI	SN74HC382	807-8
74HC384			
	RCA	CD74HC384	807-90
	Signetics	74HC384	807-91
74HC386			
	Hitachi	HD74HC386	828-27
	Motorola	MC74HC386	828-32
	TI	SN74HC386	828-45
	Toshiba	**TC74HC386**	**★1363** 828-47
74HC390			
	Fairchild	74HC390	815-146
	Hitachi	HD74HC390	815-147
	Mitsubishi	M74HC390	815-164
	Motorola	**MC74HC390**	**★1127** 815-171
	National	MM74HC390	815-150
	Panasonic	MN74HC390	815-151
	RCA	**CD74HC390**	**★1150** 815-153
	SPI	SP74HC390	815-154
	SGS	M74HC390	815-175
	Sharp	LR74HC390	815-166
	Signetics	**74HC390**	**★1158** 815-155
	TI	SN74HC390	815-168
	Toshiba	**TC74HC390**	**★1363** (Continued)

Arranged alphanumerically from left to right.

Base Number	Source	Device	Page-Line
74HC390			
	Toshiba	TC74HC390	816-9
	Universal	US74HC390	815-158
74HC393			
	Fairchild	74HC393	812-174
	Goldstar	**GD74HC393**	**★ 1066** 812-175
	Hitachi	HD74HC393	812-176
	Mitsubishi	M74HC393	812-143
	Motorola	**MC74HC393**	**★ 1127** 812-145
	National	MM74HC393	812-178
	Panasonic	MN74HC393	812-179
	RCA	**CD74HC393**	**★ 1150** 812-181
	SPI	SP74HC393	812-182
	SGS	M74HC393	812-146
	Sharp	LR74HC393	812-147
	Signetics	**74HC393**	**★ 1158** 812-184
	TI	SN74HC393	812-150
	Toshiba	**TC74HC393**	**★ 1363** 812-185
	Universal	US74HC393	812-186
74HC4002			
	Mitsubishi	M74HC4002	827-9
	Motorola	**MC74HC4002**	**★ 1123** 827-11
	National	MM74HC4002	827-13
	Panasonic	MN74HC4002	827-14
	RCA	**CD74HC4002**	**★ 1149** 827-16
	SPI	SP74HC4002	827-17
	SGS	M74HC4002	827-18
	Sharp	LR74HC4002	827-19
	Signetics	**74HC4002**	**★ 1160** 827-20
	TI	SN74HC4002	827-23
	Toshiba	**TC74HC4002**	**★ 1363** 827-24
	Universal	US74HC4002	827-25
74HC40102			
	RCA	**CD74HC40102**	**★ 1150** 815-87
	Signetics	**74HC40102**	**★ 1160** 815-88
	Toshiba	**TC74HC40102**	**★ 1363**
74HC40103			
	RCA	**CD74HC40103**	**★ 1150** 813-73
	Signetics	**74HC40103**	**★ 1161** 813-74
	Toshiba	**TC74HC40103**	**★ 1363**
74HC40104			
	RCA	**CD74HC40104**	**★ 1149** 835-58
	Signetics	**74HC40104**	**★ 1161** 835-59
74HC40105			
	RCA	**CD74HC40105**	**★ 1149** 831-48
	Signetics	**74HC40105**	**★ 1161** 831-49
74HC4015			
	Motorola	MC74HC4015	834-151
	RCA	**CD74HC4015**	**★ 1149** 834-153
	Signetics	**74HC4015**	**★ 1160** 834-154
74HC4016			
	Motorola	**MC74HC4016**	**★ 1130** 2824-44
	National	MM74HC4016	2824-50
	RCA	**CD74HC4016**	**★ 1149** 2824-60
	Signetics	**74HC4016**	**★ 1160** 2824-66
74HC4017			
	Fairchild	74HC4017	814-70
	Hitachi	HD74HC4017	814-71
	Mitsubishi	M74HC4017	814-72
	Motorola	**MC74HC4017**	**★ 1128** 814-74
	National	MM74HC4017	814-76
	RCA	**CD74HC4017**	**★ 1150** 814-78
			(Continued)
74HC4017			
	SPI	SP74HC4017	814-79
	SGS	M74HC4017	814-80
	Signetics	**74HC4017**	**★ 1160** 814-81
	TI	SN74HC4017	814-82
	Toshiba	**TC74HC4017**	**★ 1363** 814-83
	Universal	US74HC4017	814-84
74HC4018			
	National	MM74HC4018	827-194
74HC4020			
	Fairchild	74HC4020	813-164
	Hitachi	HD74HC4020	813-165
	Mitsubishi	M74HC4020	813-166
	Motorola	**MC74HC4020**	**★ 1128** 813-168
	National	MM74HC4020	813-170
	RCA	**CD74HC4020**	**★ 1150** 813-172
	SPI	SP74HC4020	813-173
	SGS	M74HC4020	813-174
	Signetics	**74HC4020**	**★ 1160** 813-175
	TI	SN74HC4020	813-177
	Toshiba	**TC74HC4020**	**★ 1363** 813-178
	Universal	US74HC4020	813-161
74HC4022			
	Hitachi	HD74HC4022	816-138
	Mitsubishi	M74HC4022	816-139
	TI	SN74HC4022	816-140
	Toshiba	**TC74HC4022**	**★ 1363** 816-71
74HC4024			
	Hitachi	HD74HC4024	813-34
	Mitsubishi	M74HC4024	813-35
	Motorola	MC74HC4024	813-37
	National	MM74HC4024	813-39
	RCA	**CD74HC4024**	**★ 1150** 813-41
	SGS	M74HC4024	813-42
	Signetics	**74HC4024**	**★ 1160** 813-43
	TI	SN74HC4024	813-45
	Toshiba	**TC74HC4024**	**★ 1363** 813-46
	Universal	US74HC4024	813-47
74HC4028			
	Toshiba	**TC74HC4028**	**★ 1363** 817-24
74HC4040			
	Fairchild	74HC4040	813-121
	Hitachi	HD74HC4040	813-122
	Mitsubishi	M74HC4040	813-123
	Motorola	**MC74HC4040**	**★ 1128** 813-125
	National	MM74HC4040	813-127
	Panasonic	MN74HC4040	813-128
	RCA	**CD74HC4040**	**★ 1150** 813-130
	SPI	SP74HC4040	813-131
	SGS	M74HC4040	813-132
	Signetics	**74HC4040**	**★ 1160** 813-133
	TI	SN74HC4040	813-135
	Toshiba	**TC74HC4040**	**★ 1363** 813-136
	Universal	US74HC4040	813-118
74HC4046			
	Fairchild	74HC4046	833-166
	Motorola	MC74HC4046A	837-103 3375-49
	National	MM74HC4046	837-105
	RCA	**CD74HC4046**	**★ 1150** 837-107
	Signetics	74HC4046	837-108
		74HC4046A	**★ 1160** 3375-56
74HC4047			
	Fairchild	74HC4047	833-167
74HC4049			
	Fairchild	74HC4049	809-20
	Mitsubishi	M74HC4049	810-144
	Motorola	**MC74HC4049**	**★ 1124** 809-22
			(Continued)
74HC4049			
	National	MM74HC4049	809-24
	Panasonic	MN74HC4049	809-25
	RCA	**CD74HC4049**	**★ 1149** 809-27
	SGS	M74HC4049	809-28
	Signetics	**74HC4049**	**★ 1160** 809-29
	Toshiba	**TC74HC4049**	**★ 1363** 809-30
74HC4050			
	Fairchild	74HC4050	809-64
	Mitsubishi	M74HC4050	808-66
	Motorola	**MC74HC4050**	**★ 1124** 809-66
	National	MM74HC4050	809-68
	Panasonic	MN74HC4050	809-69
	RCA	**CD74HC4050**	**★ 1149** 809-71
	SGS	M74HC4050	809-72
	Signetics	**74HC4050**	**★ 1160** 809-73
	Toshiba	**TC74HC4050**	**★ 1363** 809-74
74HC4051			
	Fairchild	74HC4051	842-86
	Hitachi	HD74HC4051	2830-7
	Motorola	**MC74HC4051**	**★ 1130** 2830-113
	National	MM74HC4051	2830-119
	Panasonic	MN74HC4051	2830-121
	RCA	**CD74HC4051**	**★ 1150** 2830-128
	SGS	M74HC4051	2830-134
	Signetics	**74HC4051**	**★ 1160** 842-87
	Toshiba	**TC74HC4051**	**★ 1363** 842-88
	Universal	US74HC4051	2830-145
74HC4052			
	Fairchild	74HC4052	838-57
	Hitachi	HD74HC4052	2830-8
	Motorola	**MC74HC4052**	**★ 1130** 2830-13
	National	MM74HC4052	2830-19
	Panasonic	MN74HC4052	2830-22
	RCA	**CD74HC4052**	**★ 1150** 2830-29
	SGS	M74HC4052	2830-35
	Signetics	**74HC4052**	**★ 1160** 838-58
	Toshiba	**TC74HC4052**	**★ 1363** 838-59
74HC4053			
	Fairchild	74HC4053	838-63
	Mitsubishi	M74HC4053	838-64
	Motorola	**MC74HC4053**	**★ 1130** 2826-45
	Panasonic	MN74HC4053	2826-50
	RCA	**CD74HC4053**	**★ 1150** 2826-57
	SGS	M74HC4053	2826-63
	Signetics	**74HC4053**	**★ 1160** 838-65
	Toshiba	**TC74HC4053**	**★ 1363** 838-66
74HC4059			
	RCA	**CD74HC4059**	**★ 1150** 816-54
	Signetics	**74HC4059**	**★ 1160** 816-55
74HC4060			
	Hitachi	HD74HC4060	814-12
	Motorola	**MC74HC4060**	**★ 1128** 814-14
	National	MM74HC4060	814-16
	RCA	**CD74HC4060**	**★ 1150** 814-18
	SGS	M74HC4060	814-19
	Signetics	**74HC4060**	**★ 1160** 814-20
	TI	SN74HC4060	814-22
	Toshiba	**TC74HC4060**	**★ 1363** 814-23
	Universal	US74HC4060	814-10
74HC4061			
	TI	SN74HC4061	808-148
74HC4066			
	Hitachi	HD74HC4066	2824-3
	Motorola	**MC74HC4066**	**★ 1130** 2824-7
	National	MM74HC4066	2824-11
	Panasonic	MN74HC4066	2824-13
	RCA	**CD74HC4066**	**★ 1149** 2824-18
	SGS	M74HC4066	2824-21
	Signetics	**74HC4066**	**★ 1160** 2824-22
	Toshiba	**TC74HC4066**	**★ 1363** 2824-30
74HC4067			
	RCA	**CD74HC4067**	**★ 1150** 2831-64
	Signetics	**74HC4067**	**★ 1160**
74HC4072			
	Toshiba	**TC74HC4072**	**★ 1363** 826-69
74HC4075			
	Motorola	**MC74HC4075**	**★ 1122** 826-87
	National	MM74HC4075	826-91
	Panasonic	MN74HC4075	826-92
	RCA	**CD74HC4075**	**★ 1149** 826-94
	SPI	SP74HC4075	826-95
	SGS	M74HC4075	826-96
	Sharp	LR74HC4075	826-97
	Signetics	**74HC4075**	**★ 1161** 826-98
	TI	SN74HC4075	826-100
	Toshiba	**TC74HC4075**	**★ 1363** 826-101
	Universal	US74HC4075	826-102
74HC4078			
	Motorola	**MC74HC4078**	**★ 1123** 827-191
	National	MM74HC4078	827-195
	Panasonic	MN74HC4078	827-196
	SPI	SP74HC4078	827-197
	SGS	M74HC4078	827-198
	Sharp	LR74HC4078	827-199
	TI	SN74HC4078A	827-201
	Toshiba	**TC74HC4078**	**★ 1363** 827-202
74HC4094			
	RCA	**CD74HC4094**	**★ 1149** 835-159
	Signetics	**74HC4094**	**★ 1161** 835-160
	Toshiba	**TC74HC4094**	**★ 1363** 835-161
74HC4102			
	Toshiba	TC74HC4102	816-8
74HC4103			
	Toshiba	TC74HC4103	812-118
74HC42	Fairchild	74HC42	817-6
	Goldstar	**GD74HC42**	**★ 1066** 817-8
	Hitachi	HD74HC42	817-9
	Mitsubishi	M74HC42	817-10
	Motorola	**MC74HC42**	**★ 1130** 817-12
	National	MM74HC42	817-14
	Panasonic	MN74HC42	817-15
	RCA	**CD74HC42**	**★ 1150** 817-17
	SPI	SP74HC42	817-18
	SGS	M74HC42	817-19
	Sharp	LR74HC42	817-20
	Signetics	**74HC42**	**★ 1156** 817-21
	TI	SN74HC42	817-23
	Toshiba	**TC74HC42**	**★ 1363** 817-25
	Universal	US74HC42	817-26
74HC423			
	Hitachi	HD74HC423	834-9
	Motorola	MC74HC423A	834-17
	National	MM74HC423A	834-23
	RCA	**CD74HC423**	**★ 1150** 834-30
			(Continued)

¶ Indicates page number in Application Note Directory.
★ Indicates additional data is provided on the page noted.

Base Number	Source	Device	Page-Line
74HC423	SGS	M74HC423	834-32
	Signetics	**74HC423**	**★1158** 834-35
	Toshiba	**TC74HC423**	**★1363** 834-39
	Universal	US74HC423	834-42
74HC4301	National	MM74HC4301	830-136
74HC4302	National	MM74HC4302	830-134
74HC4303	National	MM74HC4303	821-99
74HC4304	National	MM74HC4304	821-97
74HC4305	National	MM74HC4305	810-41
74HC4316	Motorola	MC74HC4316	2824-45
	National	MM74HC4316	2824-51
	RCA	**CD74HC4316**	**★1149** 2824-61
	Signetics	**74HC4316**	**★1161**
74HC4351	Motorola	MC74HC4351	2830-114
	National	MM74HC4351	2830-120
	RCA	**CD74HC4351**	**★1150** 2830-129
	Signetics	**74HC4351**	**★1161**
74HC4352	Motorola	MC74HC4352	2830-14
	National	MM74HC4352	2830-20
	RCA	**CD74HC4352**	**★1150** 2830-30
	Signetics	**74HC4352**	**★1161**
74HC4353	Motorola	MC74HC4353	2826-46
	RCA	**CD74HC4353**	**★1150** 2826-58
	Signetics	**74HC4353**	**★1161**
74HC442	Hitachi	HD74HC442	838-78
74HC443	Hitachi	HD74HC443	838-79
74HC444	Hitachi	HD74HC444	838-80
74HC4510	Fairchild	74HC4510	815-119
	RCA	**CD74HC4510**	**★1150** 815-121
	Signetics	**74HC4510**	**★1161** 815-122
74HC4511	Hitachi	HD74HC4511	819-129
	Mitsubishi	M74HC4511	819-130
	Motorola	**MC74HC4511**	**★1130** 819-132
	National	MM74HC4511	819-135
	RCA	**CD74HC4511**	**★1150** 819-138
	SGS	M74HC4511	819-139
	Sharp	LR74HC4511	819-140
	Signetics	**74HC4511**	**★1161** 819-141
	Toshiba	**TC74HC4511**	**★1363** 819-142
	Universal	US74HC4511	819-143
74HC4512	Fairchild	74HC4512	833-82
74HC4514	Fairchild	74HC4514	819-19
	Hitachi	HD74HC4514	818-156
	Mitsubishi	M74HC4514	819-9
	Motorola	**MC74HC4514**	**★1130** 818-159
	National	MM74HC4514	818-162
	RCA	**CD74HC4514**	**★1150** 818-165
	SGS	M74HC4514	818-167
	Sharp	LR74HC4514	819-10
	Signetics	**74HC4514**	**★1161** 818-168
	TI	SN74HC4514	819-11
	Toshiba	**TC74HC4514**	**★1363** 819-12
	Universal	US74HC4514	818-170
74HC4515	Hitachi	HD74HC4515	819-6
	Motorola	MC74HC4515	818-160
	RCA	**CD74HC4515**	**★1150** 818-166
	Signetics	**74HC4515**	**★1161** 818-169
	TI	SN74HC4515	819-7
	Toshiba	**TC74HC4515**	**★1363** 819-8
74HC4516	Fairchild	74HC4516	812-44
	RCA	**CD74HC4516**	**★1150** 812-65
	Signetics	**74HC4516**	**★1161** 812-71
74HC4518	Hitachi	HD74HC4518	815-169
	Motorola	MC74HC4518	815-172
	RCA	**CD74HC4518**	**★1150** 815-174
	SGS	M74HC4518	815-176
	Signetics	**74HC4518**	**★1161** 815-177
	Toshiba	**TC74HC4518**	**★1363** 815-178
74HC4520	Hitachi	HD74HC4520	812-142
	RCA	**CD74HC4520**	**★1150** 812-137
	SGS	M74HC4520	812-183
	Signetics	**74HC4520**	**★1161** 812-148
	Toshiba	**TC74HC4520**	**★1363** 812-138
74HC4538	Fairchild	74HC4538	834-7
	Hitachi	HD74HC4538	834-10
	Motorola	**MC74HC4538**	**★1131** 834-18
	National	MM74HC4538	834-24
	RCA	**CD74HC4538**	**★1150** 834-31
	SGS	M74HC4538	834-33
	Signetics	**74HC4538**	**★1161** 834-36
	Toshiba	**TC74HC4538**	**★1363** 834-40
	Universal	US74HC4538	834-43
74HC4543	Hitachi	HD74HC4543	819-84
	Motorola	**MC74HC4543**	**★1130** 819-86 2876-5
	National	MM74HC4543	819-136
	RCA	**CD74HC4543**	**★1150** 819-88
	SGS	M74HC4543	819-89
	Signetics	**74HC4543**	**★1161** 819-90
	Toshiba	**TC74HC4543**	**★1363** 819-91
	Universal	US74HC4543	819-92
74HC4703	Fairchild	74HC4703	837-71
74HC4724	TI	SN74HC4724	830-192
74HC490	Hitachi	HD74HC490	815-148
	TI	SN74HC490	815-157
74HC51	**Goldstar**	**GD74HC51**	**★1066** 826-45
	Hitachi	HD74HC51	826-46
	Mitsubishi	M74HC51	826-47
	Motorola	MC74HC51	826-49
	National	MM74HC51	826-51
	Panasonic	MN74HC51	826-52
	SGS	M74HC51	826-53
	TI	SN74HC51	826-55
	Toshiba	**TC74HC51**	**★1363** 826-56
74HC521	National	MM74HC521	807-37
74HC533	Fairchild	74HC533	830-44
	Hitachi	HD74HC533	830-46
	IDT	74HC533	830-39 (Continued)
74HC533	Mitsubishi	M74HC533	830-50
	Motorola	**MC74HC533**	**★1126** 830-54
	National	MM74HC533	830-58
	RCA	**CD74HC533**	**★1150** 830-62
	Samsung	74HC533	830-64
	SPI	SP74HC533	830-66
	SGS	M74HC533	830-68
	Sharp	LR74HC533	830-69
	Signetics	**74HC533**	**★1159** 830-70
	SSS	SS74HC533	830-74
	TI	SN74HC533	830-78
	Toshiba	**TC74HC533**	**★1363** 830-80
	Universal	US74HC533	830-82
74HC534	Fairchild	74HC534	821-144
	Hitachi	HD74HC534	821-146
	IDT	74HC534	821-139
	Mitsubishi	M74HC534	821-150
	Motorola	**MC74HC534**	**★1127** 821-154
	National	MM74HC534	821-158
	RCA	**CD74HC534**	**★1149** 821-162
	Samsung	74HC534	821-164
	SPI	SP74HC534	821-166
	SGS	M74HC534	821-167
	Sharp	LR74HC534	821-169
	Signetics	**74HC534**	**★1159** 821-170
	SSS	SS74HC534	821-174
	TI	SN74HC534	821-177
	Toshiba	**TC74HC534**	**★1363** 821-179
	Universal	US74HC534	821-181
74HC540	Hitachi	HD74HC540	810-55
	Mitsubishi	M74HC540	810-57
	Motorola	**MC74HC540**	**★1125** 810-60
	RCA	**CD74HC540**	**★1149** 810-64
	Samsung	74HC540	810-66
	SPI	SP74HC540	810-68
	SGS	M74HC540	810-70
	Signetics	**74HC540**	**★1159** 810-72
	SSS	SS74HC540	810-76
	TI	SN74HC540	810-79
	Toshiba	**TC74HC540**	**★1363** 810-80
	Universal	US74HC540	810-81
74HC541	Hitachi	HD74HC541	810-56
	Mitsubishi	M74HC541	841-126
	Motorola	**MC74HC541**	**★1125** 810-61
	RCA	**CD74HC541**	**★1149** 810-65
	Samsung	74HC541	810-67
	SPI	SP74HC541	810-69
	SGS	M74HC541	810-71
	Signetics	**74HC541**	**★1159** 810-73
	SSS	SS74HC541	810-77
	TI	SN74HC541	841-143
	Toshiba	**TC74HC541**	**★1363** 841-147
	Universal	US74HC541	810-82
74HC543	Fairchild	74HC543	842-19
	National	MM74HC543	842-23
74HC544	Fairchild	74HC544	842-20
	National	MM74HC544	842-24
74HC550	Fairchild	74HC550	842-37
	Motorola	MC74HC550	837-99
	National	MM74HC550	842-42
	Universal	US74HC550	842-31
74HC551	Fairchild	74HC551	842-38 842-39
	Motorola	MC74HC551	837-95
	National	MM74HC551	842-43
	Universal	US74HC551	842-32
74HC563	Fairchild	74HC563	830-45
	Hitachi	HD74HC563	830-47
	Mitsubishi	M74HC563	830-51
	Motorola	**MC74HC563**	**★1126** 830-55
	National	MM74HC563	830-59
	RCA	**CD74HC563**	**★1150** 830-63
	Samsung	74HC563	830-65
	SPI	SP74HC563	830-67
	Signetics	**74HC563**	**★1159** 830-71
	SSS	SS74HC563	830-75
	TI	SN74HC563	830-79
	Toshiba	**TC74HC563**	**★1363** 830-81
	Universal	US74HC563	830-83
74HC564	Fairchild	74HC564	821-145
	Hitachi	HD74HC564	821-147
	Mitsubishi	M74HC564	821-151
	Motorola	**MC74HC564**	**★1127** 821-155
	National	MM74HC564	821-159
	RCA	**CD74HC564**	**★1149** 821-163
	Samsung	74HC564	821-165
	SGS	M74HC564	821-168
	Signetics	**74HC564**	**★1159** 821-171
	SSS	SS74HC564	821-175
	TI	SN74HC564	821-178
	Toshiba	**TC74HC564**	**★1363** 821-180
	Universal	US74HC564	821-182
74HC568	Fairchild	74HC568	815-143
74HC569	Fairchild	74HC569	812-45
74HC573	Fairchild	74HC573	829-119
	Hitachi	HD74HC573	829-122
	Motorola	**MC74HC573**	**★1126** 829-128
	National	MM74HC573	829-132
	RCA	**CD74HC573**	**★1150** 829-137
	Samsung	74HC573	829-139
	SPI	SP74HC573	829-141
	SGS	M74HC573	829-143
	Signetics	**74HC573**	**★1159** 829-146
	SSS	SS74HC573	829-150
	TI	SN74HC573	829-154
	Toshiba	**TC74HC573**	**★1363** 829-156
	Universal	US74HC573	829-158
74HC574	Fairchild	74HC574	822-58
	Hitachi	HD74HC574	822-61
	Motorola	**MC74HC574**	**★1127** 822-68
	National	MM74HC574	822-72
	RCA	**CD74HC574**	**★1149** 822-77
	Samsung	74HC574	822-79
	SPI	SP74HC574	822-81
	SGS	M74HC574	822-83
	Signetics	**74HC574**	**★1159** 822-86
	SSS	SS74HC574	822-90
	TI	SN74HC574	822-94
	Toshiba	**TC74HC574**	**★1363** 822-96
	Universal	US74HC574	822-98
74HC58	Motorola	MC74HC58	826-23
	National	MM74HC58	826-25
	Signetics	**74HC58**	**★1156** (Continued)

Arranged alphanumerically from left to right.

Base Number	Source	Device	Page-Line
74HC58	Signetics	74HC58	827-21
	Universal	US74HC58	826-26
74HC583			
	RCA	**CD74HC583**	★ **1150** 806-2
	Signetics	**74HC583**	★ **1159** 806-3
74HC589			
	Hitachi	HD74HC589	836-113
	Motorola	MC74HC589	836-115 3855-67
	National	MM74HC589	836-117
	TI	SN74HC589	836-118
	Universal	US74HC589	836-119
74HC590			
	Hitachi	HD74HC590	813-105
	Motorola	MC74HC590	813-107
	National	MM74HC590	813-109
	TI	SN74HC590	813-111
	Toshiba	**TC74HC590**	★ **1363** 813-112
	Universal	US74HC590	813-102
74HC592			
	Hitachi	HD74HC592	813-84
	Motorola	MC74HC592	813-100
	National	MM74HC592	813-88
	TI	SN74HC592	813-92
	Toshiba	**TC74HC592**	★ **1363** 813-94
	Universal	US74HC592	813-78
74HC593			
	Hitachi	HD74HC593	813-85
	Motorola	MC74HC593	813-101
	National	MM74HC593	813-89
	TI	SN74HC593	813-93
	Toshiba	**TC74HC593**	★ **1363** 813-95
	Universal	US74HC593	813-79
74HC594			
	TI	SN74HC594	836-107
74HC595			
	Hitachi	HD74HC595	836-98
	Mitsubishi	M74HC595	836-99
	Motorola	MC74HC595	836-101 3855-72
	National	MM74HC595	836-103
	SGS	M74HC595	836-104
	TI	SN74HC595	836-108
	Toshiba	**TC74HC595**	★ **1363** 836-110
	Universal	US74HC595	836-111
74HC597			
	Hitachi	HD74HC597	836-91
	Motorola	MC74HC597	836-93 3855-68
	National	MM74HC597	836-23
	RCA	**CD74HC597**	★ **1149** 836-25
	SGS	M74HC597	836-94
	Signetics	**74HC597**	★ **1159** 836-26
	Toshiba	**TC74HC597**	★ **1363** 836-96
	Universal	US74HC597	836-28
74HC604			
	TI	SN74HC604	833-15
74HC620			
	Hitachi	HD74HC620	841-22
	Motorola	MC74HC620	841-40
	TI	SN74HC620	841-24
	Toshiba	**TC74HC620**	★ **1363** 841-25
74HC623			
	Hitachi	HD74HC623	841-121
	Motorola	MC74HC623	841-41
	TI	SN74HC623	841-144
	Toshiba	**TC74HC623**	★ **1363** 841-148
74HC640			
	Fairchild	74HC640	841-7
	Hitachi	HD74HC640	841-68
	IDT	74HC640	841-31
	Mitsubishi	M74HC640	841-52
	Motorola	**MC74HC640**	★ **1125** 841-42
	RCA	**CD74HC640**	★ **1149** 841-70
			(Continued)
74HC640			
	Samsung	74HC640	841-44
	Sharp	LR74HC640	841-47
	Signetics	**74HC640**	★ **1159** 841-72
	SSS	SS74HC640	841-74
	TI	SN74HC640	841-49
	Toshiba	**TC74HC640**	★ **1363** 841-8
	Universal	US74HC640	841-77
74HC643			
	Fairchild	74HC643	841-10
	Hitachi	HD74HC643	841-189
	Motorola	**MC74HC643**	★ **1125** 841-43
	RCA	**CD74HC643**	★ **1149** 841-191
	Samsung	74HC643	841-45
	SGS	M74HC643	841-46
	Sharp	LR74HC643	841-71
	Signetics	**74HC643**	★ **1159** 842-1
	SSS	SS74HC643	842-3
	TI	SN74HC643	841-76
	Toshiba	**TC74HC643**	★ **1363** 841-11
	Universal	US74HC643	842-4
74HC645			
	Fairchild	74HC645	840-94
	IDT	74HC645	841-112
	SSS	SS74HC645	840-96
	TI	SN74HC645	841-145
74HC646			
	Fairchild	74HC646	840-153
	Hitachi	HD74HC646	840-154
	Mitsubishi	M74HC646	840-156
	Motorola	**MC74HC646**	★ **1125** 840-159
	National	MM74HC646	840-162
	RCA	**CD74HC646**	★ **1149** 840-164
	Samsung	74HC646	840-165
	SGS	M74HC646	840-166
	Signetics	**74HC646**	★ **1159** 840-167
	SSS	SS74HC646	840-169
	TI	SN74HC646	840-172
	Toshiba	**TC74HC646**	★ **1363** 840-174
74HC647			
	Signetics	**74HC647**	★ **1159** 841-20
74HC648			
	Fairchild	74HC648	840-107 842-49
	Hitachi	HD74HC648	840-108
	Mitsubishi	M74HC648	840-110
	Motorola	**MC74HC648**	★ **1125** 840-113
	National	MM74HC648	840-116
	RCA	**CD74HC648**	★ **1149** 840-118
	Samsung	74HC648	840-119
	SGS	M74HC648	840-120
	Signetics	**74HC648**	★ **1159** 840-121
	SSS	SS74HC648	840-123
	TI	SN74HC648	840-126
	Toshiba	**TC74HC648**	★ **1363** 840-128
74HC651			
	Hitachi	HD74HC651	840-109
	Motorola	MC74HC651	840-114
	TI	SN74HC651	840-127
	Toshiba	**TC74HC651**	★ **1363** 840-129
74HC652			
	Hitachi	HD74HC652	840-155
	Motorola	MC74HC652	840-160
	TI	SN74HC652	840-173
	Toshiba	**TC74HC652**	★ **1363** 840-175
74HC658			
	Motorola	MC74HC658	837-88
	TI	SN74HC658	842-56
74HC659			
	Motorola	MC74HC659	837-89
	TI	SN74HC659	842-57
74HC664			
	Motorola	MC74HC664	841-14
	TI	SN74HC664	842-58
74HC665			
	Motorola	MC74HC665	841-15
	TI	SN74HC665	842-59
74HC668			
	Hitachi	HD74HC668	815-127
74HC669			
	Hitachi	HD74HC669	812-135
74HC670			
	Goldstar	**GD74HC670**	★ **1066** 838-1
	Hitachi	HD74HC670	838-2
	RCA	**CD74HC670**	★ **1149** 831-68
	Signetics	**74HC670**	★ **1159** 831-69
	TI	SN74HC670	838-4
	Toshiba	**TC74HC670**	★ **1363** 831-70
74HC673			
	Hitachi	HD74HC673	836-175
	TI	SN74HC673	836-176
74HC674			
	Hitachi	HD74HC674	836-173
	TI	SN74HC674	836-174
74HC677			
	TI	SN74HC677	806-99
74HC678			
	TI	SN74HC678	806-100
74HC679			
	TI	SN74HC679	806-97
74HC680			
	TI	SN74HC680	806-98
74HC682			
	Hitachi	HD74HC682	806-129
	TI	SN74HC682	806-142
74HC684			
	Hitachi	HD74HC684	806-130
	TI	SN74HC684	806-143
74HC686			
	Hitachi	HD74HC686	806-131
74HC688			
	Fairchild	74HC688	806-106 806-128
	Hitachi	HD74HC688	806-107
	Mitsubishi	M74HC688	806-132
	Motorola	**MC74HC688**	★ **1131** 806-134
	National	MM74HC688	806-136
	RCA	**CD74HC688**	★ **1150** 806-109
	SGS	M74HC688	806-137
	Sharp	LR74HC688	806-138
	Signetics	74HC688	806-110
	TI	SN74HC688	806-144
	Toshiba	**TC74HC688**	★ **1363** 806-111
	Universal	US74HC688	806-112
74HC690			
	TI	SN74HC690	815-112
	Toshiba	**TC74HC690**	★ **1363** 815-113
74HC691			
	TI	SN74HC691	813-10
	Toshiba	**TC74HC691**	★ **1363** 813-11
74HC692			
	TI	SN74HC692	815-114
	Toshiba	**TC74HC692**	★ **1363** 815-115
74HC693			
	TI	SN74HC693	813-12
	Toshiba	**TC74HC693**	★ **1363** 813-13
74HC696			
	TI	SN74HC696	815-108
	Toshiba	**TC74HC696**	★ **1363** 815-110
74HC697			
	TI	SN74HC697	813-14
	Toshiba	**TC74HC697**	★ **1363** 813-16
74HC698			
	TI	SN74HC698	815-109
	Toshiba	**TC74HC698**	★ **1363** 815-111
74HC699			
	TI	SN74HC699	813-15
	Toshiba	**TC74HC699**	★ **1363** 813-17
74HC7001			
	TI	SN74HC7001	824-72
74HC7002			
	TI	SN74HC7002	827-142
74HC7003			
	TI	SN74HC7003	825-136
74HC7006			
	TI	SN74HC7006	842-52
74HC7022			
	TI	SN74HC7022	816-141
74HC7030			
	Signetics	**74HC7030**	★ **1161** 3809-17
74HC7032			
	TI	SN74HC7032	826-146
74HC7046			
	RCA	**CD74HC7046**	★ **1150** 834-147
	Signetics	**74HC7046**	★ **1161** 3375-57
74HC7074			
	TI	SN74HC7074	838-49
74HC7075			
	TI	SN74HC7075	842-55
74HC7076			
	TI	SN74HC7076	842-54
74HC7266			
	RCA	**CD74HC7266**	★ **1149** 828-102
	TI	SN74HC7266	828-109
	Toshiba	**TC74HC7266**	★ **1363**
74HC7292			
	Toshiba	**TC74HC7292**	★ **1363**
74HC7294			
	Toshiba	**TC74HC7294**	★ **1363**
74HC73	Hitachi	HD74HC73	823-114
	Mitsubishi	M74HC73	823-116
	Motorola	**MC74HC73**	★ **1126** 823-120
	National	MM74HC73	823-124
	RCA	**CD74HC73**	★ **1149** 823-129
	SPI	SP74HC73	823-131
	SGS	M74HC73	823-133
	Signetics	**74HC73**	★ **1156** 823-135
	TI	SN74HC73	823-138
	Toshiba	**TC74HC73**	★ **1363** 823-140
	Universal	US74HC73	823-142
74HC7340			
	TI	SN74HC7340	839-55
74HC7344			
	TI	SN74HC7344	840-92
74HC7373			
	Motorola	MC74HC7373	828-168
74HC74	Fairchild	74HC74	820-18
	Goldstar	**GD74HC74**	★ **1066** 820-19
	Hitachi	HD74HC74	820-20
	Mitsubishi	M74HC74	820-21
	Motorola	**MC74HC74**	★ **1126** 820-23
	National	MM74HC74	820-25
	Panasonic	MN74HC74	820-26
	RCA	**CD74HC74**	★ **1149** 820-28
	SPI	SP74HC74	820-29
	SGS	M74HC74	820-30
	Sharp	LR74HC74	820-31
	Signetics	**74HC74**	★ **1156** 820-32
	SSS	SS74HC74	820-34
	TI	SN74HC74	820-36
	Toshiba	**TC74HC74**	★ **1363** 820-37
	Universal	US74HC74	820-38
74HC75	Fairchild	74HC75	830-138
	Hitachi	HD74HC75	830-139
			(Continued)

¶ Indicates page number in Application Note Directory.
★ Indicates additional data is provided on the page noted.

Base Number	Source	Device	Page-Line
74HC75	Mitsubishi	M74HC75	830-140
	Motorola	**MC74HC75**	★1126 830-142
	National	MM74HC75	830-144
	Panasonic	MN74HC75	830-145
	RCA	**CD74HC75**	★1150 830-147
	SPI	SP74HC75	830-148
	SGS	M74HC75	830-149
	Signetics	**74HC75**	★1156 830-150
	SSS	SS74HC75	830-152
	TI	SN74HC75	830-154
	Toshiba	**TC74HC75**	★1363 830-155
	Universal	US74HC75	830-156
74HC7533	Motorola	MC74HC7533	828-169
74HC7563	Motorola	MC74HC7563	828-170
74HC7573	Motorola	MC74HC7573	828-171
74HC7597	**Signetics**	**74HC7597**	★1161
74HC76	Fairchild	74HC76	822-179
	Hitachi	HD74HC76	822-181
	Mitsubishi	M74HC76	822-183
	Motorola	**MC74HC76**	★1126 822-187
	National	MM74HC76	823-3
	Panasonic	MN74HC76	823-5
	SPI	SP74HC76	823-9
	SGS	M74HC76	823-11
	Sharp	LR74HC76	823-13
	TI	SN74HC76	823-17
	Toshiba	**TC74HC76**	★1363 823-20
74HC77	Hitachi	HD74HC77	829-1
	Motorola	MC74HC77	829-25
	National	MM74HC77	830-180
	SPI	SP74HC77	829-26
	SGS	M74HC77	829-27
	TI	SN74HC77	829-3
	Toshiba	**TC74HC77**	★1363 829-4
74HC7793	Motorola	MC74HC7793	829-98
74HC78	Hitachi	HD74HC78	823-102
	TI	SN74HC78	823-105
74HC7873	Motorola	MC74HC7873	828-153
74HC793	Motorola	MC74HC793	830-164
74HC80	SPI	SP74HC80	806-119
74HC804	TI	SN74HC804	820-2
74HC805	TI	SN74HC805	820-3
74HC808	TI	SN74HC808	820-1
74HC82	SPI	SP74HC82	806-32
74HC83	Hitachi	HD74HC83	806-39
	SPI	SP74HC83	806-47
74HC832	TI	SN74HC832	820-4
74HC85	Fairchild	74HC85	807-30
	Goldstar	**GD74HC85**	★1066 806-122
	Hitachi	HD74HC85	807-31
	Mitsubishi	M74HC85	807-32
	Motorola	**MC74HC85**	★1131 807-34
	National	MM74HC85	807-38
	Panasonic	MN74HC85	807-39
	RCA	**CD74HC85**	★1150 807-41
	SPI	SP74HC85	807-42
	SGS	M74HC85	807-43
	Sharp	LR74HC85	807-44
	Signetics	**74HC85**	★1156 807-45
	TI	SN74HC85	807-46
	Toshiba	**TC74HC85**	★1363 807-47
	Universal	US74HC85	807-48
74HC86	Fairchild	74HC86	828-25
	Goldstar	**GD74HC86**	★1066 (Continued)

Base Number	Source	Device	Page-Line
74HC86	Goldstar	GD74HC86	828-26
	Hitachi	HD74HC86	828-28
	Mitsubishi	M74HC86	828-29
	Motorola	**MC74HC86**	★1123 828-33
	National	MM74HC86	828-35
	Panasonic	MN74HC86	828-36
	RCA	**CD74HC86**	★1149 828-38
	SPI	SP74HC86	828-39
	SGS	M74HC86	828-40
	Sharp	LR74HC86	828-41
	Signetics	**74HC86**	★1156 828-42
	TI	SN74HC86	828-46
	Toshiba	**TC74HC86**	★1363 828-48
	Universal	US74HC86	828-49
74HC873	Motorola	MC74HC873	828-155
74HC881	Hitachi	HD74HC881	806-159
	TI	SN74HC881	806-170
74HC90	SPI	SP74HC90	814-110
74HC9000	Motorola	MC74HC9000	838-25
74HC9014	Motorola	MC74HC9014	810-152
74HC9015	Motorola	MC74HC9015	808-74
74HC9034	Motorola	MC74HC9034	810-146
74HC9035	Motorola	MC74HC9035	808-68
74HC91	Hitachi	HD74HC91	836-67
74HC9114	Motorola	MC74HC9114	810-154
74HC9115	Motorola	MC74HC9115	808-76
74HC9134	Motorola	MC74HC9134	810-150
74HC9135	Motorola	MC74HC9135	808-72
74HC93	**Goldstar**	**GD74HC93**	★1066 813-1
	Hitachi	HD74HC93	813-2
	RCA	**CD74HC93**	★1150 813-4
	SPI	SP74HC93	812-194
	Signetics	**74HC93**	★1156 813-5
74HC9373	Motorola	MC74HC9373	828-160
74HC942	National	MM74HC942	3380-8 ¶ 411-2
74HC943	National	MM74HC943 ¶	412-13
74HC95	Hitachi	HD74HC95	835-94
74HC9533	Motorola	MC74HC9533	828-172
74HC9563	Motorola	MC74HC9563	828-173
74HC9573	Motorola	MC74HC9573	828-174
74HC9616	Motorola	MC74HC9616	3856-98
74HCT00	**Goldstar**	**GD74HCT00**	★1066 825-71
	Motorola	MC74HCT00	825-73
	National	MM74HCT00	825-75
	RCA	**CD74HCT00**	★1149 825-77
	Signetics	**74HCT00**	★1156 825-79
	SSS	SS74HCT00	825-80
	Universal	US74HCT00	825-81
74HCT02	**Goldstar**	**GD74HCT02**	★1066 827-145
	RCA	**CD74HCT02**	★1149 827-147
	Signetics	**74HCT02**	★1156 827-149
	SSS	SS74HCT02	827-151
	Universal	US74HCT02	827-152

Base Number	Source	Device	Page-Line
74HCT03	Motorola	MC74HCT03	825-139
	RCA	**CD74HCT03**	★1149 825-125
	Signetics	**74HCT03**	★1156 825-126
	Universal	US74HCT03	825-142
74HCT04	Fairchild	74HCT04	811-27
	Goldstar	**GD74HCT04**	★1066 811-28
	Motorola	MC74HCT04	811-34
	National	MM74HCT04	811-40
	RCA	**CD74HCT04**	★1149 811-44
	SGS	M74HCT04	811-47
	Signetics	**74HCT04**	★1156 811-48
	SSS	SS74HCT04	811-50
	Toshiba	**TC74HCT04**	★1363 811-51
	Universal	US74HCT04	811-52
74HCT05	**Goldstar**	**GD74HCT05**	★1066
	Motorola	MC74HCT05	811-35
	National	MM74HCT05	811-41
	Universal	US74HCT05	811-53
74HCT07	Fairchild	74HCT07	808-150
	Goldstar	**GD74HCT07**	★1066 808-151
	Toshiba	TC74HCT07	808-152
74HCT08	**Goldstar**	**GD74HCT08**	★1066 824-75
	RCA	**CD74HCT08**	★1149 824-77
	Signetics	**74HCT08**	★1156 824-79
	Universal	US74HCT08	824-80
74HCT10	**Goldstar**	**GD74HCT10**	★1066 825-8
	RCA	**CD74HCT10**	★1149 825-10
	Signetics	**74HCT10**	★1156 825-13
	SSS	SS74HCT10	825-15
	Universal	US74HCT10	825-16
74HCT107	National	MM74HCT107	823-144
	RCA	CD74HCT107	823-147
	Signetics	**74HCT107**	★1156 823-151
	Universal	US74HCT107	823-153
74HCT109	National	MM74HCT109	823-24
	RCA	CD74HCT109	823-27
	Signetics	**74HCT109**	★1156 823-30
	Universal	US74HCT109	823-31
74HCT11	**Goldstar**	**GD74HCT11**	★1066 824-20
	RCA	**CD74HCT11**	★1149 824-22
	Signetics	**74HCT11**	★1156 824-24
	Universal	US74HCT11	824-25
74HCT112	**Goldstar**	**GD74HCT112**	★1066 823-90
	National	MM74HCT112	823-92
	RCA	CD74HCT112	823-94
	Signetics	**74HCT112**	★1156 823-96
	Universal	US74HCT112	823-97
74HCT116	MicroTech	74HCT116	828-158
	Universal	US74HCT116	828-157
74HCT123	**Goldstar**	**GD74HCT123**	★1066 834-79
	RCA	**CD74HCT123**	★1150 834-81
	Signetics	**74HCT123**	★1157 (Continued)

Base Number	Source	Device	Page-Line
74HCT123	Signetics	74HCT123	834-82
	Universal	US74HCT123	834-53
74HCT125	**Goldstar**	**GD74HCT125**	★1066 808-102
	Hitachi	HD74HCT125	808-136
	Motorola	MC74HCT125	808-96
	RCA	**CD74HCT125**	★1149 808-138
	Signetics	**74HCT125**	★1157 808-100
	Universal	US74HCT125	808-103
74HCT126	Hitachi	HD74HCT126	808-93
	Motorola	MC74HCT126	808-97
	RCA	**CD74HCT126**	★1149 808-99
	Signetics	**74HCT126**	★1157 808-101
	Universal	US74HCT126	808-104
74HCT132	**RCA**	**CD74HCT132**	★1149 838-159
	Signetics	**74HCT132**	★1157 838-161
74HCT133	Universal	US74HCT133	825-200
74HCT137	CTI	74HCT137	818-128
	Hitachi	HD74HCT137	818-130
	Plessey	MV74HCT137	818-132
	RCA	**CD74HCT137**	★1150 818-136
	SGS	M74HCT137	818-57
	Signetics	**74HCT137**	★1157 818-138
	SSS	SS74HCT137	818-140
	Supertex	74HCT137	818-143
	TI	SN74HCT137	818-146
	Toshiba	**TC74HCT137**	★1363 818-147
	Universal	US74HCT137	818-148
74HCT138	CTI	74HCT138	818-40
	Hitachi	HD74HCT138	818-42
	IDT	IDT74HCT138	818-5
	Mitel	MD74HCT138R	818-45
	Motorola	MC74HCT138	818-48
	National	MM74HCT138	818-50
	Plessey	MV74HCT138	818-51
	RCA	**CD74HCT138**	★1150 818-54
	SPI	SP74HCT138	818-56
	Signetics	**74HCT138**	★1157 818-58
	SSS	SS74HCT138	818-62
	Supertex	74HCT138	818-66
	TI	SN74HCT138	818-69
	Toshiba	**TC74HCT138**	★1363 818-70
	Universal	US74HCT138	818-71
74HCT139	CTI	74HCT139	817-132
	IDT	IDT74HCT139	817-99
	Mitel	MD74HCT139R	817-135
	National	MM74HCT139	817-138
	Plessey	MV74HCT139	817-140
	RCA	**CD74HCT139**	★1150 817-142
	SPI	SP74HCT139	817-146
	Signetics	**74HCT139**	★1157 817-147
	SSS	SS74HCT139	817-150
	Supertex	74HCT139	817-154
74HCT14	**Goldstar**	**GD74HCT14**	★1066 839-31
	RCA	**CD74HCT14**	★1149 839-34
	Signetics	**74HCT14**	★1156 839-35
	Universal	US74HCT14	839-36
74HCT147	**RCA**	**CD74HCT147**	★1150 819-55 (Continued)

Arranged alphanumerically from left to right.

Base Number	Source	Device	Page-Line
74HCT147			
	Signetics	**74HCT147**	★ **1157** 819-56
	SSS	SS74HCT147	819-58
	Universal	US74HCT147	819-59
74HCT149			
	National	MM74HCT149	819-42
74HCT151			
	RCA	**CD74HCT151**	★ **1150** 833-49
	Signetics	**74HCT151**	★ **1157** 833-50
	Universal	US74HCT151	833-51
74HCT153			
	Goldstar	**GD74HCT153**	★ **1066** 833-94
	National	MM74HCT153	832-27
	RCA	**CD74HCT153**	★ **1150** 832-29
	Signetics	**74HCT153**	★ **1157** 833-95
	Universal	US74HCT153	832-1
74HCT154			
	RCA	**CD74HCT154**	★ **1150** 819-36
	Signetics	**74HCT154**	★ **1157** 819-37
74HCT155			
	Goldstar	**GD74HCT155**	★ **1066**
	National	MM74HCT155	817-139
74HCT157			
	Goldstar	**GD74HCT157**	★ **1066** 832-83
	Motorola	MC74HCT157	832-86
	RCA	**CD74HCT157**	★ **1150** 832-88
	Signetics	**74HCT157**	★ **1157** 832-90
	SSS	SS74HCT157	832-92
	Universal	US74HCT157	832-93
74HCT158			
	Goldstar	**GD74HCT158**	★ **1066** 832-118
	Motorola	MC74HCT158	832-121
	RCA	**CD74HCT158**	★ **1150** 832-123
	Signetics	**74HCT158**	★ **1157** 832-125
	Universal	US74HCT158	832-127
74HCT160			
	National	MM74HCT160	815-2
	RCA	**CD74HCT160**	★ **1150** 815-4
	Signetics	**74HCT160**	★ **1157** 832-126
	Universal	US74HCT160	815-6
74HCT161			
	Goldstar	**GD74HCT161A**	★ **1066** 812-6
	National	MM74HCT161	812-9
	RCA	**CD74HCT161**	★ **1150** 812-11
	Signetics	**74HCT161**	★ **1157** 812-13
	SSS	SS74HCT161	812-15
	Universal	US74HCT161	812-16
74HCT162			
	National	MM74HCT162	814-136
	RCA	**CD74HCT162**	★ **1150** 814-138
	Signetics	**74HCT162**	★ **1157** 814-140
74HCT163			
	Goldstar	**GD74HCT163**	★ **1066** 811-143
	National	MM74HCT163	811-146
	RCA	**CD74HCT163**	★ **1150** 811-148
	Signetics	**74HCT163**	★ **1157** 811-150
	SSS	SS74HCT163	811-152
	Universal	US74HCT163	811-153
74HCT164			
	Goldstar	**GD74HCT164**	★ **1066** 836-54
	National	MM74HCT164	836-57
	RCA	CD74HCT164	836-59
			(Continued)
74HCT164			
	Signetics	**74HCT164**	★ **1157** 836-61
	Universal	US74HCT164	836-62
74HCT165			
	Goldstar	**GD74HCT165**	★ **1066** 836-13
	RCA	CD74HCT165	836-15
	Signetics	**74HCT165**	★ **1157** 836-17
74HCT166			
	Motorola	MC74HCT166	836-85
	National	MM74HCT166	836-87
	RCA	**CD74HCT166**	★ **1149** 836-89
	Signetics	**74HCT166**	★ **1157** 836-18
74HCT169			
	National	MM74HCT169	813-32
74HCT173			
	Goldstar	**GD74HCT173**	★ **1066** 820-153
	RCA	CD74HCT173	820-155
	Signetics	**74HCT173**	★ **1157** 820-156
	Universal	US74HCT173	820-157
74HCT174			
	Goldstar	**GD74HCT174**	★ **1066** 821-21
	National	MM74HCT174	821-23
	RCA	CD74HCT174	821-25
	Signetics	74HCT174	821-27
	SSS	SS74HCT174	821-29
	Universal	US74HCT174	821-30
74HCT175			
	Goldstar	**GD74HCT175**	★ **1066** 820-110
	RCA	CD74HCT175	820-112
	Signetics	**74HCT175**	★ **1157** 820-114
	SSS	SS74HCT175	820-116
	Universal	US74HCT175	820-117
74HCT181			
	RCA	**CD74HCT181**	★ **1150** 806-174
	Signetics	**74HCT181**	★ **1157** 806-175
74HCT182			
	IDT	IDT74HCT182	806-85
	RCA	**CD74HCT182**	★ **1150** 806-93
	Signetics	**74HCT182**	★ **1157** 806-94
74HCT189			
	TI	SN74HCT189	831-102
74HCT190			
	RCA	**CD74HCT190**	★ **1150** 815-140
	Signetics	**74HCT190**	★ **1157** 815-85
	Universal	US74HCT190	815-141
74HCT191			
	National	MM74HCT191	812-78
	RCA	**CD74HCT191**	★ **1150** 812-83
	Signetics	**74HCT191**	★ **1157** 812-86
	Universal	US74HCT191	813-26
74HCT192			
	RCA	**CD74HCT192**	★ **1150** 815-50
	Signetics	**74HCT192**	★ **1157** 815-51
	SSS	SS74HCT192	815-53
74HCT193			
	Goldstar	**GD74HCT193**	★ **1066** 812-75
	National	MM74HCT193	812-79
	RCA	**CD74HCT193**	★ **1150** 812-84
	Signetics	**74HCT193**	★ **1157** 812-87
	Universal	US74HCT193	835-49
74HCT194			
	RCA	**CD74HCT194**	★ **1149** 835-46
			(Continued)
74HCT194			
	Signetics	**74HCT194**	★ **1157** 835-48
74HCT195			
	RCA	**CD74HCT195**	★ **1149** 835-111
	Signetics	**74HCT195**	★ **1157** 835-112
74HCT198			
	Signetics	**74HCT198**	★ **1157** 835-157
74HCT20			
	Goldstar	**GD74HCT20**	★ **1066** 824-137
	RCA	**CD74HCT20**	★ **1149** 824-139
	Signetics	**74HCT20**	★ **1156** 824-140
	Universal	US74HCT20	824-141
74HCT2000			
	TI	SN74HCT2000	837-66
74HCT21			
	Goldstar	**GD74HCT21**	★ **1066** 823-171
	RCA	**CD74HCT21**	★ **1149** 823-173
	Signetics	**74HCT21**	★ **1156** 823-174
	Universal	US74HCT21	823-175
74HCT219			
	TI	SN74HCT219	831-103
74HCT221			
	RCA	**CD74HCT221**	★ **1150** 834-47
	Signetics	74HCT221	834-50
74HCT227			
	Signetics	**74HCT227**	★ **1157** 817-176
74HCT237			
	CTI	74HCT237	818-129
	Hitachi	HD74HCT237	818-92
	Plessey	MV74HCT237	818-133
	RCA	**CD74HCT237**	★ **1150** 818-137
	SSS	SS74HCT237	818-95
	Supertex	74HCT237	818-144
	TI	SN74HCT237	818-98
	Universal	US74HCT237	818-149
74HCT238			
	CTI	74HCT238	818-41
	Hitachi	HD74HCT238	818-93
	Plessey	MV74HCT238	818-52
	RCA	**CD74HCT238**	★ **1150** 818-22
	Signetics	**74HCT238**	★ **1157** 818-59
	SSS	SS74HCT238	818-63
	Supertex	74HCT238	818-67
	TI	SN74HCT238	818-99
74HCT239			
	CTI	74HCT239	817-133
	SSS	SS74HCT239	817-151
	Supertex	74HCT239	817-155
74HCT240			
	CTI	74HCT240	839-97
	Goldstar	**GD74HCT240**	★ **1066** 839-98
	Hitachi	HD74HCT240	839-99
	Micrel	MIC74HCT240	839-100
	Mitel	MD74HCT240R	839-103
	Motorola	MC74HCT240	839-106
	National	MM74HCT240	839-108
	Plessey	MV74HCT240	839-109
	RCA	**CD74HCT240**	★ **1149** 839-111
	Samsung	74HCT240	839-112
	SPI	SP74HCT240	839-115
	SGS	M74HCT240	839-116
	Signetics	**74HCT240**	★ **1157** 839-118
	SSS	SS74HCT240	839-120
	Supertex	74HCT240	839-122
	TI	SN74HCT240	839-125
	Toshiba	**TC74HCT240**	★ **1363** 839-127
	Universal	US74HCT240	839-128
74HCT241			
	CTI	74HCT241	839-174
	Goldstar	**GD74HCT241**	★ **1066** 839-176
	Hitachi	HD74HCT241	839-177
	Micrel	MIC74HCT241	839-179
	Mitel	MD74HCT241R	839-185
	Motorola	MC74HCT241	839-190
	National	MM74HCT241	840-55
	Plessey	MV74HCT241	840-4
	RCA	**CD74HCT241**	★ **1149** 840-8
	Samsung	74HCT241	840-10
	SPI	SP74HCT241	840-13
	SGS	M74HCT241	840-15
	Signetics	**74HCT241**	★ **1157** 840-19
	SSS	SS74HCT241	840-23
	Supertex	74HCT241	840-27
	TI	SN74HCT241	840-57
	Toshiba	**TC74HCT241**	★ **1363** 840-58
	Universal	US74HCT241	840-59
74HCT242			
	Hitachi	HD74HCT242	838-103
	Micrel	MIC74HCT242	838-104
	RCA	**CD74HCT242**	★ **1149** 838-107
	Signetics	**74HCT242**	★ **1158** 838-108
	SSS	SS74HCT242	838-111
	Supertex	74HCT242	838-114
	TI	SN74HCT242	838-115
74HCT243			
	Hitachi	HD74HCT243	838-129
	Micrel	MIC74HCT243	838-105
	RCA	CD74HCT243	838-131
	Signetics	**74HCT243**	★ **1158** 838-132
	SSS	SS74HCT243	838-112
	Supertex	74HCT243	838-134
	TI	SN74HCT243	838-77
	Universal	US74HCT243	838-135
74HCT244			
	CTI	74HCT244	839-175
	Goldstar	**GD74HCT244**	★ **1066** 840-87
	Hitachi	HD74HCT244	839-178
	Micrel	MIC74HCT244	839-180
	Mitel	MD74HCT244R	839-186
	Motorola	MC74HCT244	840-1
	National	MM74HCT244	840-3
	Plessey	MV74HCT244	840-5
	RCA	**CD74HCT244**	★ **1149** 840-9
	Samsung	74HCT244	840-11
	SPI	SP74HCT244	840-14
	SGS	M74HCT244	840-16
	Signetics	**74HCT244**	★ **1158** 840-20
	SSS	SS74HCT244	840-24
	Supertex	74HCT244	840-28
	Telmos	TMD74HCT244	840-29
	TI	SN74HCT244	840-30
	Toshiba	**TC74HCT244**	★ **1363** 840-31
	Universal	US74HCT244	840-32
74HCT245			
	CTI	74HCT245	841-151
	Goldstar	**GD74HCT245**	★ **1066** 841-152
	Hitachi	HD74HCT245	841-153
	Micrel	MIC74HCT245	841-154
	Mitel	MD74HCT245R	841-158
	Motorola	MC74HCT245	841-161
	National	MM74HCT245	841-163
	Plessey	MV74HCT245	841-164
	RCA	**CD74HCT245**	★ **1149** 841-166
	SPI	SP74HCT245	841-168
	SGS	M74HCT245	841-169
	Signetics	**74HCT245**	★ **1158** 841-170
	SSS	SS74HCT245	841-172
	Supertex	74HCT245	841-174
	TI	SN74HCT245	841-176
			(Continued)

¶ Indicates page number in Application Note Directory.
★ Indicates additional data is provided on the page noted.

Base Number	Source	Device	Page-Line
74HCT245			
	Toshiba	**TC74HCT245** ★1363	841-178
	Universal	US74HCT245	841-180
74HCT251			
	RCA	**CD74HCT251** ★1150	833-139
	Signetics	**74HCT251** ★1158	833-96
	SSS	SS74HCT251	833-146
	Universal	US74HCT251	833-97
74HCT253			
	National	MM74HCT253	832-48
	RCA	**CD74HCT253** ★1150	832-50
	Signetics	**74HCT253** ★1158	832-18
	SSS	SS74HCT253	832-52
74HCT257			
	Goldstar	**GD74HCT257** ★1066	832-153
	RCA	**CD74HCT257** ★1150	832-155
	Signetics	**74HCT257** ★1158	832-157
	Universal	US74HCT257	832-158
74HCT258			
	RCA	**CD74HCT258** ★1150	832-180
	Signetics	**74HCT258** ★1158	832-182
	Universal	US74HCT258	832-183
74HCT259			
	Goldstar	**GD74HCT259** ★1066	831-1
	RCA	**CD74HCT259** ★1150	831-3
	Signetics	**74HCT259** ★1158	831-5
	SSS	SS74HCT259	831-7
	Universal	US74HCT259	831-8
74HCT266			
	Universal	US74HCT266	828-115
74HCT27			
	Goldstar	**GD74HCT27** ★1066	827-78
	RCA	**CD74HCT27** ★1149	827-80
	Signetics	**74HCT27** ★1156	827-81
	SSS	SS74HCT27	827-83
	Universal	US74HCT27	827-84
74HCT273			
	Goldstar	**GD74HCT273** ★1066	821-79
	National	MM74HCT273	821-82
	RCA	CD74HCT273	821-84
	Signetics	**74HCT273** ★1158	821-86
	SSS	SS74HCT273	821-88
	Supertex	74HCT273	821-90
	Universal	US74HCT273	821-91
74HCT280			
	RCA	**CD74HCT280** ★1150	808-48
	Signetics	**74HCT280** ★1158	808-49
74HCT283			
	Goldstar	**GD74HCT283** ★1066	
	RCA	**CD74HCT283** ★1150	806-54
	Signetics	**74HCT283** ★1158	806-55
74HCT290			
	MicroTech	74HCT290	814-111
74HCT297			
	RCA	**CD74HCT297** ★1150	3375-17
	Signetics	**74HCT297** ★1158	3375-21
74HCT298			
	Universal	US74HCT298	833-14
74HCT299			
	National	MM74HCT299	836-164
	RCA	**CD74HCT299** ★1149	836-166

(Continued)

Base Number	Source	Device	Page-Line
74HCT299			
	Signetics	**74HCT299** ★1158	836-168
74HCT30			
	Goldstar	**GD74HCT30** ★1066	825-166
	RCA	**CD74HCT30** ★1149	825-168
	Signetics	**74HCT30** ★1156	825-169
	Universal	US74HCT30	825-170
74HCT32			
	Goldstar	**GD74HCT32** ★1066	826-149
	RCA	**CD74HCT32** ★1149	826-151
	Signetics	**74HCT32** ★1156	826-152
	Universal	US74HCT32	826-153
74HCT322			
	Goldstar	**GD74HCT322** ★1066	
74HCT34			
	Motorola	MC74HCT34	811-36
	National	MM74HCT34	811-42
74HCT354			
	RCA	**CD74HCT354** ★1150	833-140
	Signetics	**74HCT354** ★1158	833-142
	SSS	SS74HCT354	833-147
74HCT356			
	RCA	**CD74HCT356** ★1150	833-141
	Signetics	**74HCT356** ★1158	833-143
	Universal	US74HCT356	833-148
74HCT357			
	MicroTech	74HCT357	833-56
74HCT365			
	Goldstar	**GD74HCT365** ★1066	809-150
	RCA	**CD74HCT365** ★1149	809-154
	Signetics	**74HCT365** ★1158	809-158
	SSS	SS74HCT365	809-161
	Universal	US74HCT365	809-162
74HCT366			
	RCA	**CD74HCT366** ★1149	810-25
	Signetics	**74HCT366** ★1158	810-29
	Universal	US74HCT366	810-31
74HCT367			
	Goldstar	**GD74HCT367** ★1066	809-151
	RCA	**CD74HCT367** ★1149	809-155
	Signetics	**74HCT367** ★1158	809-159
74HCT368			
	RCA	**CD74HCT368** ★1149	810-26
	Signetics	**74HCT368** ★1158	810-30
	Universal	US74HCT368	810-32
74HCT373			
	CTI	74HCT373	829-161
	Goldstar	**GD74HCT373** ★1066	829-163
	Hitachi	HD74HCT373	829-164
	Micrel	MIC74HCT373	829-166
	Mitel	MD74HCT373R	829-172
	Motorola	MC74HCT373	829-176
	National	MM74HCT373	829-178
	Plessey	MV74HCT373	829-179
	RCA	**CD74HCT373** ★1150	829-183
	SPI	SP74HCT373	829-187
	SGS	M74HCT373	829-189
	Signetics	**74HCT373** ★1158	829-190
	SSS	SS74HCT373	830-2
	Supertex	74HCT373	830-6
	TI	SN74HCT373	830-9
	Toshiba	**TC74HCT373** ★1363	

(Continued)

Base Number	Source	Device	Page-Line
74HCT373			
	Toshiba	TC74HCT373	830-11
	Universal	US74HCT373	830-13
74HCT374			
	CTI	74HCT374	822-101
	Goldstar	**GD74HCT374** ★1066	822-103
	Hitachi	HD74HCT374	822-104
	Micrel	MIC74HCT374	822-106
	Mitel	MD74HCT374R	822-112
	Motorola	MC74HCT374	822-115
	National	MM74HCT374	822-118
	Plessey	MV74HCT374	822-120
	RCA	CD74HCT374	822-124
	SPI	SP74HCT374	822-128
	SGS	M74HCT374	822-130
	Signetics	**74HCT374** ★1158	822-131
	SSS	SS74HCT374	822-135
	Supertex	74HCT374	822-139
	TI	SN74HCT374	822-142
	Toshiba	**TC74HCT374** ★1363	
	Universal	US74HCT374	822-145
74HCT375			
	Universal	US74HCT375	829-31
74HCT377			
	Goldstar	GD74HCT377	821-118
	RCA	CD74HCT377	821-120
	Signetics	**74HCT377** ★1158	821-121
	SSS	SS74HCT377	821-123
	Universal	US74HCT377	821-124
74HCT381			
	MicroTech	74HCT381	806-155
74HCT382			
	MicroTech	74HCT382	806-157
74HCT384			
	NCR	NCR74HCT384	843-43
	RCA	CD74HCT384	843-45
	Signetics	74HCT384	843-48
74HCT390			
	RCA	**CD74HCT390** ★1150	815-160
	Signetics	**74HCT390** ★1158	815-161
	Universal	US74HCT390	815-182
74HCT393			
	Goldstar	GD74HCT393	812-187
	RCA	**CD74HCT393** ★1150	812-189
	Signetics	**74HCT393** ★1158	812-191
	Supertex	74HCT393	812-153
74HCT4002			
	RCA	**CD74HCT4002** ★1149	827-27
	Signetics	**74HCT4002** ★1160	827-29
	Universal	US74HCT4002	827-31
74HCT40102			
	RCA	**CD74HCT40102** ★1150	815-90
	Signetics	**74HCT40102** ★1161	815-91
74HCT40103			
	RCA	**CD74HCT40103** ★1150	813-76
	Signetics	**74HCT40103** ★1160	813-77
74HCT40104			
	RCA	**CD74HCT40104** ★1149	835-61
	Signetics	**74HCT40104** ★1161	835-62
74HCT40105			
	RCA	**CD74HCT40105** ★1149	831-51
	Signetics	**74HCT40105** ★1161	831-52
74HCT4015			
	RCA	**CD74HCT4015** ★1149	834-156

(Continued)

Base Number	Source	Device	Page-Line
74HCT4015			
	Signetics	**74HCT4015** ★1160	834-157
74HCT4016			
	RCA	**CD74HCT4016** ★1149	2824-62
	Signetics	**74HCT4016** ★1160	
74HCT4017			
	RCA	**CD74HCT4017** ★1150	814-86
	Signetics	**74HCT4017** ★1160	814-87
	Universal	US74HCT4017	814-88
74HCT4020			
	RCA	**CD74HCT4020** ★1150	813-180
	Signetics	**74HCT4020** ★1160	813-181
	Universal	US74HCT4020	813-162
74HCT4024			
	RCA	**CD74HCT4024** ★1150	813-49
	Signetics	**74HCT4024** ★1160	813-50
	Universal	US74HCT4024	813-51
74HCT4040			
	RCA	**CD74HCT4040** ★1150	813-138
	Signetics	**74HCT4040** ★1160	813-139
	Universal	US74HCT4040	813-119
74HCT4046			
	RCA	**CD74HCT4046** ★1150	837-110
	Signetics	**74HCT4046** ★1160	837-111 3375-58
74HCT4049			
	Signetics	74HCT4049	809-31
74HCT4050			
	Signetics	74HCT4050	809-75
74HCT4051			
	RCA	**CD74HCT4051** ★1150	2830-130
	Signetics	**74HCT4051** ★1160	842-89
74HCT4052			
	RCA	**CD74HCT4052** ★1150	2830-31
	Signetics	**74HCT4052** ★1160	838-60
74HCT4053			
	RCA	**CD74HCT4053** ★1150	2826-59
	Signetics	**74HCT4053** ★1160	838-67
74HCT4059			
	RCA	**CD74HCT4059** ★1150	816-57
	Signetics	**74HCT4059** ★1160	816-58
74HCT4060			
	RCA	**CD74HCT4060** ★1150	814-25
	Signetics	**74HCT4060** ★1160	814-26
	Universal	US74HCT4060	814-11
74HCT4066			
	RCA	**CD74HCT4066** ★1149	
	Signetics	**74HCT4066** ★1160	
74HCT4067			
	RCA	**CD74HCT4067** ★1150	2831-65
	Signetics	**74HCT4067** ★1160	
74HCT4075			
	RCA	**CD74HCT4075** ★1149	826-104
	Signetics	**74HCT4075** ★1161	826-105
	Universal	US74HCT4075	826-106
74HCT4094			
	RCA	**CD74HCT4094** ★1149	835-163
	Signetics	**74HCT4094** ★1161	835-164

Arranged alphanumerically from left to right.

PART NUMBER INDEX

Base Number	Source	Device	Page-Line
74HCT42	**Goldstar**	**GD74HCT42**	★ **1066** 817-27
	RCA	**CD74HCT42**	★ **1150** 817-29
	Signetics	**74HCT42**	★ **1156** 817-30
74HCT423	**RCA**	**CD74HCT423**	★ **1150** 834-48
	Signetics	**74HCT423**	★ **1158** 834-51
	Universal	US74HCT423	834-54
74HCT4316	**RCA**	**CD74HCT4316**	★ **1149** 2824-63
	Signetics	**74HCT4316**	★ **1161**
74HCT4351	**RCA**	**CD74HCT4351**	★ **1150** 2830-131
	Signetics	**74HCT4351**	★ **1161**
74HCT4352	**RCA**	**CD74HCT4352**	★ **1150** 2830-32
	Signetics	**74HCT4352**	★ **1161**
74HCT4353	**RCA**	**CD74HCT4353**	★ **1150** 2826-60
	Signetics	**74HCT4353**	★ **1161**
74HCT4510	**RCA**	**CD74HCT4510**	★ **1150** 815-124
	Signetics	**74HCT4510**	★ **1161**
74HCT4511	**RCA**	**CD74HCT4511**	★ **1150** 819-145
	Signetics	**74HCT4511**	★ **1161** 819-146
	Universal	US74HCT4511	819-147
74HCT4514	**RCA**	**CD74HCT4514**	★ **1150** 818-173
	Signetics	**74HCT4514**	★ **1161** 818-175
	Universal	US74HCT4514	818-177
74HCT4515	**RCA**	**CD74HCT4515**	★ **1150** 818-174
	Signetics	**74HCT4515**	★ **1161** 818-176
74HCT4516	**RCA**	**CD74HCT4516**	★ **1150** 812-85
	Signetics	**74HCT4516**	★ **1161** 812-88
74HCT4518	**RCA**	**CD74HCT4518**	★ **1150** 815-180
	Signetics	**74HCT4518**	★ **1161** 815-181
74HCT4520	**RCA**	**CD74HCT4520**	★ **1150** 812-140
	Signetics	**74HCT4520**	★ **1161** 812-151
74HCT4538	**RCA**	**CD74HCT4538**	★ **1150** 834-49
	Signetics	**74HCT4538**	★ **1161** 834-52
	Universal	US74HCT4538	834-55
74HCT4543	**RCA**	**CD74HCT4543**	★ **1150** 819-94
	Signetics	**74HCT4543**	★ **1161** 819-95
	Universal	US74HCT4543	819-96
74HCT502	SPI	SP74HCT502	838-20
74HCT503	SPI	SP74HCT503	838-21
74HCT504	SPI	SP74HCT504	838-19
74HCT51	**Goldstar**	**GD74HCT51**	★ **1066**
	Universal	US74HCT51	826-57
74HCT521	National	MM74HCT521	807-50
74HCT533	CTI	74HCT533	830-86
	Hitachi	HD74HCT533	830-88
	Micrel	MIC74HCT533	830-90
	Motorola	MC74HCT533	830-95
	National	MM74HCT533	830-97
	Plessey	MV74HCT533	830-98
	RCA	**CD74HCT533**	★ **1150** 830-102
	SPI	SP74HCT533	830-106
	Signetics	**74HCT533**	★ **1159** 830-109
	SSS	SS74HCT533	830-113
	Supertex	74HCT533	830-117
	TI	SN74HCT533	830-120
	Universal	US74HCT533	830-123
74HCT534	CTI	74HCT534	821-185
	Hitachi	HD74HCT534	821-187
	Micrel	MIC74HCT534	821-189
	Motorola	MC74HCT534	821-194
	National	MM74HCT534	821-196
	Plessey	MV74HCT534	822-1
	RCA	CD74HCT534	822-5
	Signetics	**74HCT534**	★ **1159** 822-9
	SSS	SS74HCT534	822-13
	Supertex	74HCT534	822-17
	TI	SN74HCT534	822-20
	Universal	US74HCT534	822-23
	Zytrex	ZX74HCT534	822-28
74HCT540	CTI	74HCT540	810-85
	Hitachi	HD74HCT540	810-87
	Micrel	MIC74HCT540	810-89
	Mitel	MD74HCT540R	810-95
	Motorola	MC74HCT540	810-99
	National	MM74HCT540	810-103
	Plessey	MV74HCT540	810-105
	RCA	**CD74HCT540**	★ **1149** 810-109
	SPI	SP74HCT540	810-113
	SGS	M74HCT540	810-115
	Signetics	**74HCT540**	★ **1159** 810-117
	SSS	SS74HCT540	810-121
	Supertex	74HCT540	810-124
	TI	SN74HCT540	839-126
	Toshiba	**TC74HCT540**	★ **1363** 810-128
	Zytrex	ZX74HCT540	810-131
74HCT541	CTI	74HCT541	810-86
	Hitachi	HD74HCT541	810-88
	Micrel	MIC74HCT541	810-90
	Mitel	MD74HCT541R	810-96
	Motorola	MC74HCT541	810-100
	National	MM74HCT541	810-104
	Plessey	MV74HCT541	810-106
	RCA	**CD74HCT541**	★ **1149** 810-110
	SPI	SP74HCT541	810-114
	SGS	M74HCT541	810-116
	Signetics	**74HCT541**	★ **1159** 810-118
	SSS	SS74HCT541	810-122
	Supertex	74HCT541	810-125
	TI	SN74HCT541	810-127
	Toshiba	**TC74HCT541**	★ **1363** 841-179
	Zytrex	ZX74HCT541	810-132
74HCT543	National	MM74HCT543	842-27
74HCT544	National	MM74HCT544	842-28
74HCT545	Plessey	MV74HCT545	841-87
74HCT550	Motorola	MC74HCT550	837-101
	National	MM74HCT550	842-46
	Universal	US74HCT550	842-33
74HCT551	Motorola	MC74HCT551	837-97
	National	MM74HCT551	842-47
	Universal	US74HCT551	842-34
74HCT56	Supertex	74HCT56	822-18
74HCT563	CTI	74HCT563	830-87
	Hitachi	HD74HCT563	830-89
	Micrel	MIC74HCT563	830-91
	Plessey	MV74HCT563	830-99
	RCA	**CD74HCT563**	★ **1150** 830-103
	SPI	SP74HCT563	830-107
	SGS	M74HCT563	830-108
	Signetics	**74HCT563**	★ **1159** 830-110
	SSS	SS74HCT563	830-114
	Supertex	74HCT563	830-118
	TI	SN74HCT563	830-121
	Toshiba	**TC74HCT563**	★ **1363** 830-122
	Universal	US74HCT563	830-124
	Zytrex	ZX74HCT563	830-128
74HCT564	CTI	74HCT564	821-186
	Hitachi	HD74HCT564	821-188
	Micrel	MIC74HCT564	821-190
	Plessey	MV74HCT564	822-2
	RCA	CD74HCT564	822-6
	Signetics	**74HCT564**	★ **1159** 822-10
	SSS	SS74HCT564	822-14
	TI	SN74HCT564	822-21
	Toshiba	**TC74HCT564**	★ **1363** 822-22
	Universal	US74HCT564	822-24
74HCT573	CTI	74HCT573	829-162
	Hitachi	HD74HCT573	829-165
	Micrel	MIC74HCT573	829-167
	Mitel	MD74HCT573R	829-173
	Plessey	MV74HCT573	829-180
	RCA	**CD74HCT573**	★ **1150** 829-184
	SPI	SP74HCT573	829-188
	Signetics	**74HCT573**	★ **1159** 829-191
	SSS	SS74HCT573	830-3
	Supertex	74HCT573	830-7
	TI	SN74HCT573	830-10
	Toshiba	TC74HCT573	830-12
	Zytrex	ZX74HCT573	830-18
74HCT574	CTI	74HCT574	822-102
	Hitachi	HD74HCT574	822-105
	Micrel	MIC74HCT574	822-107
	Mitel	MD74HCT574R	822-113
	National	MM74HCT574	822-119
	Plessey	MV74HCT574	822-121
	RCA	CD74HCT574	822-125
	SPI	SP74HCT574	822-129
	Signetics	**74HCT574**	★ **1159** 822-132
	SSS	SS74HCT574	822-136
	Supertex	74HCT574	822-140
	TI	SN74HCT574	822-143
	Toshiba	**TC74HCT574**	★ **1363** 822-144
	Universal	US74HCT574	822-146
74HCT58	**Signetics**	**74HCT58**	★ **1156** 827-30
	Universal	US74HCT58	826-27
74HCT583	**RCA**	**CD74HCT583**	★ **1150** 806-5
	Signetics	**74HCT583**	★ **1159** 806-6
74HCT589	Universal	US74HCT589	836-120
74HCT590	National	MM74HCT590	813-114
	Universal	US74HCT590	813-103
74HCT592	MicroTech	74HCT592	813-96
	Universal	US74HCT592	813-80
74HCT593	MicroTech	74HCT593	813-97
	Universal	US74HCT593	813-81
74HCT595	Universal	US74HCT595	836-112
74HCT597	**RCA**	**CD74HCT597**	★ **1149** 836-30
	Signetics	**74HCT597**	★ **1159** 836-31
74HCT620	Hitachi	HD74HCT620	841-50
	Motorola	MC74HCT620	841-55
	TI	SN74HCT620	841-59
74HCT623	Hitachi	HD74HCT623	841-51
	Motorola	MC74HCT623	841-56
	TI	SN74HCT623	841-60
74HCT640	Hitachi	HD74HCT640	841-78
	Motorola	MC74HCT640	841-82
	National	MM74HCT640	841-85
	RCA	**CD74HCT640**	★ **1149** 841-89
	SGS	M74HCT640	841-90
	Signetics	**74HCT640**	★ **1159** 841-91
	SSS	SS74HCT640	841-93
	TI	SN74HCT640	841-94
	Toshiba	**TC74HCT640**	★ **1363** 841-61
	Universal	US74HCT640	841-62
74HCT643	Hitachi	HD74HCT643	842-5
	Motorola	MC74HCT643	842-8
	National	MM74HCT643	841-86
	RCA	**CD74HCT643**	★ **1149** 842-10
	SGS	M74HCT643	842-11
	Signetics	**74HCT643**	★ **1159** 842-12
	SSS	SS74HCT643	842-14
	TI	SN74HCT643	841-95
	Toshiba	**TC74HCT643**	★ **1363** 841-96
	Universal	US74HCT643	841-97
74HCT645	SSS	SS74HCT645	840-98
	TI	SN74HCT645	841-177
74HCT646	Hitachi	HD74HCT646	840-176
	RCA	**CD74HCT646**	★ **1149** 840-182
	Signetics	**74HCT646**	★ **1159** 840-184
	SSS	SS74HCT646	840-186
	TI	SN74HCT646	841-1
	Toshiba	**TC74HCT646**	★ **1363** 841-3
74HCT647	**Signetics**	**74HCT647**	★ **1159** 841-21
74HCT648	Hitachi	HD74HCT648	840-130
	RCA	**CD74HCT648**	★ **1149** 840-135
	Signetics	**74HCT648**	★ **1159** 840-137
	SSS	SS74HCT648	840-139
	TI	SN74HCT648	840-140
	Toshiba	**TC74HCT648**	★ **1363** 840-142
	Universal	US74HCT648	840-144
74HCT651	Hitachi	HD74HCT651	840-131
	Motorola	MC74HCT651	840-133
	TI	SN74HCT651	840-141
	Toshiba	**TC74HCT651**	★ **1363** 840-143
74HCT652	Hitachi	HD74HCT652	840-177
	Motorola	MC74HCT652	840-180
	TI	SN74HCT652	841-2
	Toshiba	**TC74HCT652**	★ **1363** 841-4

¶ Indicates page number in Application Note Directory.
★ Indicates additional data is provided on the page noted.

Base Number	Source	Device	Page-Line
74HCT658			
	Motorola	MC74HCT658	837-92
	TI	SN74HCT658	842-60
74HCT659			
	Motorola	MC74HCT659	837-93
	TI	SN74HCT659	842-61
74HCT664			
	Motorola	MC74HCT664	841-18
	TI	SN74HCT664	842-62
74HCT665			
	Motorola	MC74HCT665	841-19
	TI	SN74HCT665	842-63
74HCT670			
	RCA	**CD74HCT670**	★1149 831-72
	SPI	SP74HCT670	831-73
	Signetics	**74HCT670**	★1159 831-74
74HCT688			
	Hitachi	HD74HCT688	806-113
	National	MM74HCT688	806-146
	RCA	**CD74HCT688**	★1150 806-116
	Signetics	74HCT688	806-117
74HCT7007			
	Toshiba	**TC74HCT7007**	★1363
74HCT7030			
	Signetics	**74HCT7030**	★1161 3809-18
74HCT7046			
	RCA	**CD74HCT7046**	★1150 834-149
	Signetics	**74HCT7046**	★1161 3375-59
74HCT7266			
	RCA	CD74HCT7266	828-113
74HCT73			
	RCA	**CD74HCT73**	★1149 823-148
	Signetics	**74HCT73**	★1156 823-152
	Universal	US74HCT73	823-154
74HCT74			
	Goldstar	**GD74HCT74**	★1066 820-39
	National	MM74HCT74	820-41
	RCA	**CD74HCT74**	★1149 820-43
	Signetics	**74HCT74**	★1156 820-45
	SSS	SS74HCT74	820-47
	Universal	US74HCT74	820-48
74HCT75			
	RCA	**CD74HCT75**	★1150 830-158
	Signetics	**74HCT75**	★1156 830-159
	SSS	SS74HCT75	830-161
	Universal	US74HCT75	830-162
74HCT7597			
	Signetics	**74HCT7597**	★1161
74HCT76			
	National	MM74HCT76	823-25
	Universal	US74HCT76	823-32
74HCT784			
	NCR	74HCT784	843-49
74HCT784X4			
	NCR	74HCT784X4	843-50
74HCT85			
	Goldstar	**GD74HCT85**	★1066 806-123
	RCA	**CD74HCT85**	★1150 807-52
	Signetics	**74HCT85**	★1156 807-53
74HCT86			
	Goldstar	**GD74HCT86**	★1066 828-50
	RCA	**CD74HCT86**	★1149 828-52
	Signetics	**74HCT86**	★1156 828-54
	Universal	US74HCT86	828-55
74HCT9034			
	Motorola	MC74HCT9034	810-148
74HCT9035			
	Motorola	MC74HCT9035	808-70
74HCT93			
	Goldstar	**GD74HCT93**	★1066 813-6
	RCA	**CD74HCT93**	★1150 813-8
	Signetics	**74HCT93**	★1156 813-9
74HCT9510			
	TI	SN74HCT9510	843-99
74HCT9511			
	TI	SN74HCT9511	843-100
74HCT9512			
	TI	SN74HCT9512	843-101
74HCTLS00			
	Samsung	**KS74HCTLS00**	★1153 825-78
74HCTLS01			
	Samsung	**KS74HCTLS01**	★1153 825-140
74HCTLS02			
	Samsung	**KS74HCTLS02**	★1153 827-148
74HCTLS03			
	Samsung	**KS74HCTLS03**	★1153 825-141
74HCTLS04			
	Samsung	**KS74HCTLS04**	★1153 811-45
74HCTLS05			
	Samsung	**KS74HCTLS05**	★1153 811-46
74HCTLS08			
	Samsung	**KS74HCTLS08**	★1153 824-78
74HCTLS09			
	Samsung	**KS74HCTLS09**	★1153 824-108
74HCTLS10			
	Samsung	**KS74HCTLS10**	★1153 825-11
74HCTLS107			
	Samsung	**KS74HCTLS107**	★1153 823-149
74HCTLS109			
	Samsung	**KS74HCTLS109**	★1153 823-28
74HCTLS11			
	Samsung	**KS74HCTLS11**	★1153 824-23
74HCTLS112			
	Samsung	**KS74HCTLS112**	★1153 823-95
74HCTLS12			
	Samsung	**KS74HCTLS12**	★1153 825-12
74HCTLS132			
	Samsung	**KS74HCTLS132**	★1153 838-160
74HCTLS138			
	Samsung	**KS74HCTLS138**	★1153 818-55
74HCTLS139			
	Samsung	**KS74HCTLS139**	★1153 817-143
74HCTLS155			
	Samsung	**KS74HCTLS155**	★1153 817-144
74HCTLS157			
	Samsung	**KS74HCTLS157**	★1153 832-89
74HCTLS158			
	Samsung	**KS74HCTLS158**	★1153 832-124
74HCTLS160			
	Samsung	**KS74HCTLS160**	★1153 815-5
74HCTLS161			
	Samsung	**KS74HCTLS161**	★1153 812-12
74HCTLS162			
	Samsung	**KS74HCTLS162**	★1153 814-139
74HCTLS163			
	Samsung	**KS74HCTLS163**	★1153 811-149
74HCTLS164			
	Samsung	**KS74HCTLS164**	★1153 836-60
74HCTLS165			
	Samsung	**KS74HCTLS165**	★1153 836-16
74HCTLS166			
	Samsung	**KS74HCTLS166**	★1153 836-90
74HCTLS174			
	Samsung	**KS74HCTLS174**	★1153 821-26
74HCTLS175			
	Samsung	**KS74HCTLS175**	★1153 820-113
74HCTLS191			
	Samsung	**KS74HCTLS191**	★1153 813-25
74HCTLS193			
	Samsung	**KS74HCTLS193**	★1153 835-47
74HCTLS210			
	Samsung	**KS74HCTLS210**	★1153 839-113
74HCTLS238			
	Samsung	**KS74HCTLS238**	★1153 818-24
74HCTLS239			
	Samsung	**KS74HCTLS239**	★1153 817-145
74HCTLS240			
	Samsung	**KS74HCTLS240**	★1153 839-114
74HCTLS241			
	Samsung	**KS74HCTLS241**	★1153 840-12
74HCTLS244			
	Samsung	**KS74HCTLS244**	★1153 840-88
74HCTLS245			
	Samsung	74HCTLS245	841-167
		KS74HCTLS245	★1153
74HCTLS257			
	Samsung	**KS74HCTLS257**	★1153 832-156
74HCTLS258			
	Samsung	**KS74HCTLS258**	★1153 832-181
74HCTLS259			
	Samsung	**KS74HCTLS259**	★1153 831-4
74HCTLS266			
	Samsung	**KS74HCTLS266**	★1153 828-114
74HCTLS273			
	Samsung	**KS74HCTLS273**	★1153 821-85
74HCTLS299			
	Samsung	**KS74HCTLS299**	★1153 836-167
74HCTLS365			
	Samsung	**KS74HCTLS365**	★1153 809-156
74HCTLS366			
	Samsung	**KS74HCTLS366**	★1153 810-27
74HCTLS367			
	Samsung	**KS74HCTLS367**	★1153 809-157
74HCTLS368			
	Samsung	**KS74HCTLS368**	★1153 810-28
74HCTLS373			
	Samsung	**KS74HCTLS373**	★1153 829-185
74HCTLS374			
	Samsung	**KS74HCTLS374**	★1153 822-126
74HCTLS393			
	Samsung	**KS74HCTLS393**	★1153 812-190
74HCTLS533			
	Samsung	**KS74HCTLS533**	★1153 830-104
74HCTLS534			
	Samsung	**KS74HCTLS534**	★1153 822-7
74HCTLS540			
	Samsung	**KS74HCTLS540**	★1153 810-111
74HCTLS541			
	Samsung	**KS74HCTLS541**	★1153 810-112
74HCTLS563			
	Samsung	**KS74HCTLS563**	★1153 830-105
74HCTLS564			
	Samsung	**KS74HCTLS564**	★1153 822-8
74HCTLS573			
	Samsung	**KS74HCTLS573**	★1153 829-186
74HCTLS574			
	Samsung	**KS74HCTLS574**	★1153 822-127
74HCTLS640			
	Samsung	**KS74HCTLS640**	★1153 841-57
74HCTLS643			
	Samsung	**KS74HCTLS643**	★1153 841-58
74HCTLS646			
	Samsung	**KS74HCTLS646**	★1153 840-183
74HCTLS648			
	Samsung	**KS74HCTLS648**	★1153 840-136
74HCTLS73			
	Samsung	**KS74HCTLS73**	★1153 823-150
74HCTLS74			
	Samsung	**KS74HCTLS74**	★1153 820-44
74HCTLS76			
	Samsung	**KS74HCTLS76**	★1153 823-29

Arranged alphanumerically from left to right.

Base Number	Source	Device	Page-Line
74HCTLS78	**Samsung**	**KS74HCTLS78**	**★1153** 823-106
74HCTLS86	**Samsung**	**KS74HCTLS86**	**★1153** 828-53
74HCTR137	MicroTech	74HCTR137	818-131
74HCTR138	MicroTech	74HCTR138	818-43
74HCTR14	MicroTech	74HCTR14	839-32
74HCTR148	MicroTech	74HCTR148	819-40
74HCTR153	MicroTech	74HCTR153	832-25
74HCTR154	MicroTech	74HCTR154	819-34
74HCTR157	MicroTech	74HCTR157	832-84
74HCTR158	MicroTech	74HCTR158	832-119
74HCTR161	MicroTech	74HCTR161	812-7
74HCTR163	MicroTech	74HCTR163	811-144
74HCTR164	MicroTech	74HCTR164	836-55
74HCTR166	MicroTech	74HCTR166	836-83
74HCTR181	MicroTech	74HCTR181	806-172
74HCTR182	MicroTech	74HCTR182	807-15
74HCTR240	MicroTech	74HCTR240	839-101
74HCTR241	MicroTech	74HCTR241	839-181
74HCTR244	MicroTech	74HCTR244	839-182
74HCTR245	MicroTech	74HCTR245	841-155
74HCTR273	MicroTech	74HCTR273	821-80
74HCTR280	MicroTech	74HCTR280	808-46
74HCTR354	MicroTech	74HCTR354	833-134
74HCTR356	MicroTech	74HCTR356	833-135
74HCTR373	MicroTech	74HCTR373	829-168
74HCTR374	MicroTech	74HCTR374	822-108
74HCTR375	MicroTech	74HCTR375	829-30
74HCTR533	MicroTech	74HCTR533	830-92
74HCTR534	MicroTech	74HCTR534	821-191
74HCTR540	MicroTech	74HCTR540	810-91
74HCTR541	MicroTech	74HCTR541	810-92
74HCTR563	MicroTech	74HCTR563	830-93
74HCTR564	MicroTech	74HCTR564	821-192
74HCTR573	MicroTech	74HCTR573	829-169
74HCTR574	MicroTech	74HCTR574	822-109
74HCTR620	MicroTech	74HCTR620	841-79
74HCTR623	MicroTech	74HCTR623	841-156
74HCTR640	MicroTech	74HCTR640	841-80
74HCTR643	MicroTech	74HCTR643	842-6
74HCTR688	MicroTech	74HCTR688	806-114
74HCTR90	MicroTech	74HCTR90	814-112
74HCU04	Motorola	MC74HCU04	811-84
	National	MM74HCU04	811-86
	RCA	CD74HCU04	811-13
	SGS	M74HCU04	811-87

(Continued)

Base Number	Source	Device	Page-Line
74HCU04	Signetics	74HCU04	811-88
	TI	SN74HCU04	811-90
	Toshiba	**TC74HCU04**	**★1363** 811-91
74HCu04	**RCA**	**CD74HCu04**	**★1149**
74L164	TI	SN74L164	3856-38
74LS00	**Fairchild**	**74LS00**	**★5311** 871-25
	Goldstar	**GD74LS00**	**★1066** 871-26
	Hitachi	HD74LS00	871-27
	Motorola	**SN74LS00**	**★1122**
	National	DM74LS00	871-30
	Panasonic	DN74LS00	871-31
	SGS	74LS00	871-33
	Signetics	**74LS00**	**★1156** 871-35
	TI	SN74LS00	871-37
74LS01	Hitachi	HD74LS01	871-171
	Motorola	**SN74LS01**	**★1122** 871-175
	National	DM74LS01	871-179
	Panasonic	DN74LS01	871-181
	Signetics	**74LS01**	**★1156** 871-187
	TI	SN74LS01	871-190
74LS02	**Fairchild**	**74LS02**	**★5311** 874-20
	Goldstar	**GD74LS02**	**★1066** 874-22
	Hitachi	HD74LS02	874-23
	Motorola	**SN74LS02**	**★1122** 874-26
	National	DM74LS02	874-29
	Panasonic	DN74LS02	874-30
	SGS	74LS02	874-33
	Signetics	**74LS02**	**★1156** 874-38
	TI	SN74LS02	874-41
74LS03	**Fairchild**	**74LS03**	**★5311** 871-169
	Goldstar	**GD74LS03**	**★1066** 871-170
	Hitachi	HD74LS03	871-172
	Motorola	**SN74LS03**	**★1122** 871-176
	National	DM74LS03	871-180
	Panasonic	DN74LS03	871-182
	SGS	74LS03	871-184
	TI	SN74LS03	871-191
74LS04	**Fairchild**	**74LS04**	**★5311** 857-114
	Goldstar	**GD74LS04**	**★1066** 857-115
	Hitachi	HD74LS04	857-116
	Motorola	**SN74LS04**	**★1124** 857-118
	National	DM74LS04	857-120
	Panasonic	DN74LS04	857-121
	SGS	74LS04	857-123
	Signetics	**74LS04**	**★1156** 857-125
	TI	SN74LS04	857-127
74LS05	**Fairchild**	**74LS05**	**★5311** 857-159
	Goldstar	**GD74LS05**	**★1066** 857-160
	Hitachi	HD74LS05	857-163
	Motorola	**SN74LS05**	**★1124** 857-165
	National	DM74LS05	857-167
	Panasonic	DN74LS05	857-168
	SGS	74LS05	857-170
	Signetics	**74LS05**	**★1156** 857-172
	TI	SN74LS05	857-174
74LS06	**Goldstar**	**GD74LS06**	**★1066** 857-161
74LS07	**Goldstar**	**GD74LS07**	**★1066** 856-151
74LS08	**Fairchild**	**74LS08**	**★5311** 869-109
	Goldstar	**GD74LS08**	**★1066** 869-110

(Continued)

Base Number	Source	Device	Page-Line
74LS08	Hitachi	HD74LS08	869-111
	Motorola	**SN74LS08**	**★1122** 869-113
	National	DM74LS08	869-115
	Panasonic	DN74LS08	869-116
	SGS	74LS08	869-118
	Signetics	**74LS08**	**★1156** 869-120
	TI	SN74LS08	869-122
74LS09	**Fairchild**	**74LS09**	**★5311** 869-147
	Goldstar	**GD74LS09**	**★1066** 869-148
	Hitachi	HD74LS09	869-149
	Motorola	**SN74LS09**	**★1122** 869-151
	National	DM74LS09	869-153
	Panasonic	DN74LS09	869-155
	SGS	74LS09	869-157
	Signetics	**74LS09**	**★1156** 869-159
	TI	SN74LS09	869-161
74LS10	**Fairchild**	**74LS10**	**★5311** 870-141
	Goldstar	**GD74LS10**	**★1066** 870-142
	Hitachi	HD74LS10	870-143
	Motorola	**SN74LS10**	**★1122** 870-145
	National	DM74LS10	870-147
	Panasonic	DN74LS10	870-148
	SGS	74LS10	870-150
	Signetics	**74LS10**	**★1156** 870-152
	TI	SN74LS10	870-154
74LS107	Fairchild	74LS107	867-176
	Goldstar	**GD74LS107**	**★1066** 867-177
	Hitachi	HD74LS107A	867-179
	Motorola	**SN74LS107A**	**★1126** 868-4
	National	DM74LS107A	868-8
	Panasonic	DN74LS107	868-10
	Signetics	**74LS107**	**★1156** 868-14
	TI	SN74LS107A	868-18
74LS109	**Fairchild**	**74LS109**	**★5311** 867-125
	Goldstar	**GD74LS109**	**★1066** 867-126
	Hitachi	HD74LS109A	867-127
	Motorola	**SN74LS109A**	**★1126** 867-129
	National	DM74LS109	867-131
	Panasonic	DN74LS109	867-132
	SGS	74LS109	867-134
	Signetics	**74LS109**	**★1156** 867-136
	TI	SN74LS109A	867-138
74LS11	**Fairchild**	**74LS11**	**★5311** 869-26
	Goldstar	**GD74LS11**	**★1066** 869-27
	Hitachi	HD74LS11	868-178
	Motorola	**SN74LS11**	**★1122** 869-29
	National	DM74LS11	869-31
	Panasonic	DN74LS11	869-32
	SGS	74LS11	869-34
	Signetics	**74LS11**	**★1156** 869-36
	TI	SN74LS11	869-38
74LS112	**Fairchild**	**74LS112**	**★5311** 868-92
	Goldstar	**GD74LS112**	**★1066** 868-93
	Hitachi	HD74LS112	868-94
	Motorola	**SN74LS112A**	**★1126** 868-96
	National	DM74LS112	868-98
	Panasonic	DN74LS112	868-99
	SGS	74LS112	868-129
	Signetics	**74LS112**	**★1156**

(Continued)

Base Number	Source	Device	Page-Line
74LS112	Signetics	74LS112	868-101
	TI	SN74LS112A	868-102
74LS113	**Fairchild**	**74LS113**	**★5311** 868-55
	Hitachi	HD74LS113	868-56
	Motorola	**SN74LS113A**	**★1126** 868-58
	National	DM74LS113A	868-60
	Panasonic	DN74LS113	868-61
	SGS	74LS113	868-63
	Signetics	**74LS113**	**★1156** 868-65
	TI	SN74LS113A	868-66
74LS114	**Fairchild**	**74LS114**	**★5311** 868-121
	Hitachi	HD74LS114	868-122
	Motorola	**SN74LS114A**	**★1126** 868-124
	National	DM74LS114A	868-126
	Panasonic	DN74LS114	868-127
	SGS	T74LS114	868-131
	TI	SN74LS114A	868-132
74LS12	**Fairchild**	**74LS12**	**★5311** 870-174
	Hitachi	HD74LS12	870-175
	Motorola	**SN74LS12**	**★1122** 870-177
	National	DM74LS12	870-179
	Panasonic	DN74LS12	870-180
	TI	SN74LS12	870-182
74LS122	**Goldstar**	**GD74LS122**	**★1066** 880-117
	Hitachi	HD74LS122	880-118
	Motorola	**SN74LS122**	**★1131** 880-120
	National	DM74LS122	880-121
	TI	SN74LS122	880-123
74LS123	**Goldstar**	**GD74LS123**	**★1066** 880-151
	Hitachi	HD74LS123	880-152
	Motorola	**SN74LS123**	**★1131** 880-154
	National	DM74LS123	880-155
	Panasonic	DN74LS123	880-156
	TI	SN74LS123	880-158 ¶ 361-15
74LS125	**Fairchild**	**74LS125**	**★5311** 856-102
	Goldstar	**GD74LS125A**	**★1066** 856-103
	Hitachi	HD74LS125A	856-104
	Motorola	**SN74LS125A**	**★1124** 856-106
	National	DM74LS125A	856-108
	Panasonic	DN74LS125A	856-109
	SGS	74LS125A	856-111
	Signetics	**74LS125A**	**★1157** 856-113
	TI	SN74LS125A	856-115
74LS126	**Fairchild**	**74LS126**	**★5311** 856-127
	Goldstar	**GD74LS126**	**★1066** 856-128
	Hitachi	HD74LS126A	856-129
	Motorola	**SN74LS126A**	**★1124** 856-131
	National	DM74LS126	856-133
	SGS	74LS126	856-135
	Signetics	**74LS126A**	**★1157** 856-137
	TI	SN74LS126A	856-139
74LS13	**Fairchild**	**74LS13**	**★5311** 887-113
	Hitachi	HD74LS13	887-114
	Motorola	**SN74LS13**	**★1125** 887-116
	National	DM74LS13	887-118
	Panasonic	DN74LS13	887-119
	SGS	T74LS13	887-123

(Continued)

¶ Indicates page number in Application Note Directory.
★ Indicates additional data is provided on the page noted.

Base Number	Source	Device	Page-Line
74LS13	**Signetics**	**74LS13**	★1156 887-125
	TI	SN74LS13	887-127
74LS132	**Fairchild**	**74LS132**	★5311 887-159
	Goldstar	**GD74LS132**	★1066 887-160
	Hitachi	HD74LS132	888-1
	Motorola	**SN74LS132**	★1125 888-3
	National	DM74LS132	888-5
	Panasonic	DN74LS132	888-6
	SGS	74LS132	887-121
	Signetics	**74LS132**	★1157 888-9
	TI	SN74LS132	888-11
74LS133	**Fairchild**	**74LS133**	★5311 872-59
	Motorola	**SN74LS133**	★1122 872-61
	SGS	74LS133	872-63
74LS136	**Fairchild**	**74LS136**	★5311 874-71
	Goldstar	**GD74LS136**	★1066 874-72
	Hitachi	HD74LS136	874-73
	Motorola	**SN74LS136**	★1123 874-75
	National	DM74LS136	874-77
	Panasonic	DN74LS136	874-78
	SGS	74LS136	874-80
	Signetics	**74LS136**	★1157 874-82
	TI	SN74LS136	874-84
74LS137	**Motorola**	**SN74LS137**	★1130 863-155
	TI	SN74LS137	863-157
74LS138	**Fairchild**	**74LS138**	★5311 863-115
	Goldstar	**GD74LS138**	★1066 863-116
	Hitachi	HD74LS138	863-117
	Motorola	**SN74LS138**	★1130 863-119
	National	DM74LS138	863-121 1457-142
	Panasonic	DN74LS138	863-122
	SGS	74LS138	863-124
	Signetics	**74LS138**	★1157 863-126
	TI	SN74LS138	863-128 1457-144
74LS139	**Fairchild**	**74LS139**	★5311 863-15
	Goldstar	**GD74LS139**	★1066 863-16
	Hitachi	HD74LS139	863-17
	Motorola	**SN74LS139**	★1130 863-19
	National	DM74LS139	863-21
	Panasonic	DN74LS139	863-22
	SGS	74LS139	863-24
	Signetics	**74LS139**	★1157 863-26
	TI	SN74LS139A	863-28
74LS14	**Fairchild**	**74LS14**	★5311 888-37
	Goldstar	**GD74LS14**	★1066 888-38
	Hitachi	HD74LS14	888-39
	Motorola	**SN74LS14**	★1125 888-41
	National	DM74LS14	888-43
	Panasonic	DN74LS14	888-44
	SGS	74LS14	888-46
	Signetics	**74LS14**	★1156 888-48
	TI	SN74LS14	888-50

Base Number	Source	Device	Page-Line
74LS145	Fairchild	74LS145	862-105
	Goldstar	**GD74LS145**	★1066 862-106
	Hitachi	HD74LS145	862-107
	Motorola	**SN74LS145**	★1130 862-109
	Panasonic	DN74LS145	862-110
	TI	SN74LS145	862-112
74LS147	**Motorola**	**SN74LS147**	★1131 889-50
	TI	SN74LS147	889-52
74LS148	Hitachi	HD74LS148	888-158
	Motorola	**SN74LS148**	★1131 888-161
	TI	SN74LS148	888-164 1462-79
74LS15	**Fairchild**	**74LS15**	★5311 869-54
	Hitachi	HD74LS15	869-55
	Motorola	**SN74LS15**	★1122 869-57
	National	DM74LS15	869-59
	Panasonic	DN74LS15	869-60
	SGS	74LS15	869-62
	TI	SN74LS15	869-64
74LS151	**Fairchild**	**74LS151**	★5311 879-173
	Goldstar	**GD74LS151**	★1066 879-174
	Hitachi	HD74LS151A	879-175
	Motorola	**SN74LS151**	★1129 879-177
	National	DM74LS151	879-179
	Panasonic	DN74LS151	879-180
	SGS	74LS151	880-2
	Signetics	**74LS151**	★1157 880-4
	TI	SN74LS151	880-6
74LS152	**Fairchild**	**74LS152**	★5311
	Hitachi	HD74LS152	880-21
	SGS	T74LS152	880-23
	TI	SN74LS152	880-24
74LS153	**Fairchild**	**74LS153**	★5311 877-139
	Goldstar	**GD74LS153**	★1066 877-140
	Hitachi	HD74LS153	877-141
	Motorola	**SN74LS153**	★1129 877-143
	National	DM74LS153	877-145
	Panasonic	DN74LS153	877-146
	SGS	74LS153	877-148
	Signetics	**74LS153**	★1157 877-150
	TI	SN74LS153	877-152
74LS154	**Goldstar**	**GD74LS154**	★1066 863-179
	Hitachi	HD74LS154	863-180
	Motorola	SN74LS154	¶ 380-3
	National	DM74LS154	864-1
	Signetics	**74LS154**	★1157 864-3
74LS155	**Fairchild**	**74LS155**	★5311 863-79
	Goldstar	**GD74LS155**	★1066 863-80
	Hitachi	HD74LS155	863-81
	Motorola	**SN74LS155**	★1130 863-83
	National	DM74LS155	863-85
	Panasonic	DN74LS155	863-86
	SGS	74LS155	863-88
	Signetics	**74LS155**	★1157 863-90
	TI	SN74LS155A	863-92
74LS156	**Fairchild**	**74LS156**	★5311 863-48

(Continued)

Base Number	Source	Device	Page-Line
74LS156	**Goldstar**	**GD74LS156**	★1066 863-49
	Hitachi	HD74LS156	863-50
	Motorola	**SN74LS156**	★1130 863-52
	National	DM74LS156	863-54
	Panasonic	DN74LS156	863-55
	SGS	74LS156	863-57
	Signetics	**74LS156**	★1157 863-59
	TI	SN74LS156	863-61
74LS157	**Fairchild**	**74LS157**	★5311 879-8
	Goldstar	**GD74LS157**	★1066 879-9
	Hitachi	HD74LS157	879-10
	Motorola	**SN74LS157**	★1129 879-12
	National	DM74LS157	879-14
	Panasonic	DN74LS157	879-15
	SGS	74LS157	879-17
	Signetics	**74LS157**	★1157 879-19
	TI	SN74LS157	879-21
74LS158	**Fairchild**	**74LS158**	★5311 878-93
	Goldstar	**GD74LS158**	★1066 878-94
	Hitachi	HD74LS158	878-95
	Motorola	**SN74LS158**	★1129 878-97
	National	DM74LS158	878-99
	Panasonic	DN74LS158	878-100
	SGS	74LS158	878-102
	Signetics	**74LS158**	★1157 878-104
	TI	SN74LS158	878-106
74LS16	**Goldstar**	**GD74LS16**	★1066 857-162
74LS160	**Fairchild**	**74LS160**	★5311 860-162
	Hitachi	HD74LS160A	860-163
	Motorola	**SN74LS160A**	★1127 860-165
	National	DM74LS160A	860-167
	Panasonic	DN74LS160A	860-168
	SGS	74LS160	860-170
	Signetics	**74LS160A**	★1157 860-172
	TI	SN74LS160A	860-174
74LS161	**Fairchild**	**74LS161**	★5311 858-152
	Goldstar	**GD74LS161A**	★1066 858-153
	Hitachi	HD74LS161A	858-154
	Motorola	**SN74LS161A**	★1127 858-156
	National	DM74LS161A	858-158
	Panasonic	DN74LS161A	858-159
	SGS	74LS161	858-161
	Signetics	**74LS161A**	★1157 858-163
	TI	SN74LS161A	858-165
74LS162	**Fairchild**	**74LS162**	★5311 861-12
	Hitachi	HD74LS162A	861-13
	Motorola	**SN74LS162A**	★1127 861-15
	National	DM74LS162	861-17
	Panasonic	DN74LS162	861-18
	SGS	74LS162	861-20
	Signetics	**74LS162A**	★1157 861-22
	TI	SN74LS162A	861-24
74LS163	**Fairchild**	**74LS163**	★5311 859-7
	Goldstar	**GD74LS163A**	★1066
		TD74LS163A	859-8
	Hitachi	HD74LS163A	859-9

(Continued)

Base Number	Source	Device	Page-Line
74LS163	Motorola	SN74LS163	¶ 380-3
		SN74LS163A	★1127 859-11
	National	DM74LS163A	859-13
	Panasonic	DN74LS163A	859-14
	SGS	74LS163	859-15
	Signetics	**74LS163A**	★1157 859-17
	TI	SN74LS163A	859-19
74LS164	**Fairchild**	**74LS164**	★5311 882-5 3856-42
	Goldstar	**GD74LS164**	★1066 882-6 3856-43
	Hitachi	HD74LS164	882-7 3856-44
	Mitsubishi	M74LS164	3856-45
	Motorola	**SN74LS164**	★1128 882-9 3856-47
	National	DM74LS164	882-11 3856-51
	Panasonic	DN74LS164	882-12 3856-54
	SGS	74LS164	882-14 3856-55
	Signetics	**74LS164**	★1157 882-17 3856-59
	TI	SN74LS164	882-18 3856-61
74LS165	**Fairchild**	**74LS165**	★5311 882-55 3855-121
	Goldstar	**GD74LS165**	★1066 882-56 3855-122
	Hitachi	HD74LS165A	882-57 3855-124
	Mitsubishi	M74LS165	3856-1
	Motorola	**SN74LS165**	★1128 882-59 ¶ 380-3 3856-4
	TI	SN74LS165A	882-60 3856-12
74LS166	**Goldstar**	**GD74LS166**	★1066 882-71 3855-123
	Mitsubishi	M74LS166	3856-2
	Motorola	**SN74LS166**	★1128 882-73 3856-5
	National	DM74LS166	882-75 3856-8
	TI	SN74LS166A	882-76 3856-13
74LS168	**Fairchild**	**74LS168**	★5311 861-94
	Motorola	**SN74LS168**	★1127 861-97
	National	DM74LS168A	861-100
	SGS	T74LS168	861-102
	Signetics	**74LS168A**	★1157 861-105
74LS169	**Fairchild**	**74LS169**	★5311 859-140
	Motorola	**SN74LS169**	★1127 859-142
	National	DM74LS169A	859-144
	SGS	T74LS169	859-146
	Signetics	**74LS169A**	★1157 859-148
	TI	SN74LS169B	859-151
74LS17	**Goldstar**	**GD74LS17**	★1066 856-152
74LS170	**Fairchild**	**74LS170**	★5311 877-5

(Continued)

Arranged alphanumerically from left to right.

Base Number	Source	Device	Page-Line
74LS170			
	Fairchild	74LS170	3830-81
	Hitachi	HD74LS170	877-6
	Motorola	**SN74LS170**	★**1128**
			877-9
			3830-83
	National	DM74LS170	877-11
			3830-87
	Panasonic	DN74LS170	877-12
	SGS	74LS170	877-14
			3830-88
	Signetics	**74LS170**	★**1157**
			877-15
			3830-90
	TI	SN74LS170	877-16
			3830-92
74LS171			
	TI	SN74LS171	864-319
74LS173			
	Fairchild	**74LS173A**	★**5311**
			866-14
	Motorola	**SN74LS173A**	★**1126**
			866-16
	National	DM74LS173	866-18
	Panasonic	DN74LS173	866-19
	Signetics	**74LS173**	★**1157**
			★**1158**
			866-21
	TI	SN74LS173A	866-23
74LS174			
	Fairchild	**74LS174**	★**5311**
			866-50
	Goldstar	**GD74LS174**	★**1066**
			866-51
	Hitachi	HD74LS174	866-52
	Motorola	**SN74LS174**	★**1126**
			866-54
	National	DM74LS174	866-56
	Panasonic	DN74LS174	866-57
	SGS	74LS174	866-59
	Signetics	**74LS174**	★**1157**
			866-61
	TI	SN74LS174	866-63
74LS175			
	Fairchild	**74LS175**	★**5311**
			864-282
	Goldstar	**GD74LS175**	★**1066**
			864-283
	Hitachi	HD74LS175	864-284
	Motorola	**SN74LS175**	★**1126**
			864-286
			¶ 380-3
	National	DM74LS175	864-288
			1460-21
	Panasonic	DN74LS175	864-289
	SGS	74LS175	864-291
	Signetics	74LS175	864-293
	TI	SN74LS175	864-295
74LS18	TI	SN74LS18	887-128
74LS181			
	Fairchild	**74LS181**	★**5311**
			855-57
	Hitachi	HD74LS181	855-58
	Motorola	**SN74LS181**	★**1132**
			855-60
	SGS	74LS181	855-62
	Signetics	**74LS181**	★**1157**
			855-64
	TI	SN74LS181	855-68
74LS182			
	Motorola	**SN74LS182**	★**1132**
			855-108
74LS183			
	Motorola	**SN74LS183**	★**1132**
			855-5
	TI	SN74LS183	855-7
74LS189			
	Fairchild	74LS189	3831-60
	TI	SN74LS189A	3831-106
74LS19	TI	SN74LS19	888-51
74LS190			
	Fairchild	74LS190	861-169
	Hitachi	HD74LS190	861-170
	Motorola	**SN74LS190**	★**1127**
			861-172
	National	DM74LS190	861-174
			(Continued)
74LS190			
	Panasonic	DN74LS190	861-175
	SGS	74LS190	861-177
	TI	SN74LS190	861-180
74LS191			
	Fairchild	74LS191	859-176
	Goldstar	**GD74LS191**	★**1066**
			859-177
	Hitachi	HD74LS191	859-178
	Motorola	**SN74LS191**	★**1127**
			859-180
	National	DM74LS191	859-182
	Panasonic	DN74LS191	859-183
	SGS	74LS191	860-2
	Signetics	**74LS191**	★**1157**
			860-4
	TI	SN74LS191	860-6
74LS192			
	Fairchild	**74LS192**	★**5311**
			861-137
	Hitachi	HD74LS192	861-138
	Motorola	**SN74LS192**	★**1127**
			861-140
	National	DM74LS192	861-142
	Panasonic	DN74LS192	861-143
	SGS	74LS192	861-145
	Signetics	**74LS192**	★**1157**
			861-147
	TI	SN74LS192	861-149
74LS193			
	Fairchild	**74LS193**	★**5311**
			860-36
	Goldstar	**GD74LS193**	★**1066**
			860-37
	Hitachi	HD74LS193	860-38
	Motorola	**SN74LS193**	★**1127**
			860-40
	National	DM74LS193	860-42
	Panasonic	DN74LS193	860-43
	SGS	74LS193	860-45
	Signetics	**74LS193**	★**1157**
			860-47
	TI	SN74LS193	860-49
74LS194			
	Fairchild	**74LS194A**	★**5311**
			3854-79
	Goldstar	**GD74LS194A**	★**1066**
			881-135
	Hitachi	HD74LS194A	881-136
			3854-55
	Motorola	**SN74LS194A**	★**1128**
			881-138
			3854-93
	National	DM74LS194A	881-140
	Panasonic	DN74LS194A	881-141
	SGS	T74LS194A	881-142
	Signetics	**74LS194A**	★**1157**
			881-144
	TI	SN74LS194A	881-145
			3854-70
74LS195			
	Fairchild	**74LS195**	★**5311**
			881-44
		74LS195A	★**5311**
			3854-80
	Goldstar	**GD74LS195**	★**1066**
			881-45
	Hitachi	HD74LS195A	881-46
			3854-86
	Motorola	**SN74LS195A**	★**1128**
			881-48
			3854-94
	National	DM74LS195A	881-50
	Panasonic	DN74LS195A	881-51
	SGS	T74LS195A	881-52
			3854-103
	Signetics	**74LS195A**	★**1157**
			881-53
			3854-107
	TI	SN74LS195A	881-54
			3854-109
74LS196			
	Fairchild	**74LS196**	★**5311**
			860-121
	Motorola	**SN74LS196**	★**1127**
			860-123
			(Continued)
74LS196			
	National	DM74LS196	860-125
	Panasonic	DN74LS196	860-126
	SGS	74LS196	860-128
	TI	SN74LS196	860-130
74LS197			
	Fairchild	**74LS197**	★**5311**
			858-99
	Motorola	**SN74LS197**	★**1127**
			858-101
	National	DM74LS197	858-103
	Panasonic	DN74LS197	858-104
	SGS	74LS197	858-106
	Signetics	**74LS197**	★**1157**
			858-108
	TI	SN74LS197	858-110
74LS20	**Fairchild**	**74LS20**	★**5311**
			870-13
	Goldstar	**GD74LS20**	★**1066**
			870-14
	Hitachi	HD74LS20	870-15
	Motorola	**SN74LS20**	★**1122**
			870-17
	National	DM74LS20	870-19
	Panasonic	DN74LS20	870-20
	SGS	74LS20	870-22
	Signetics	**74LS20**	★**1156**
			870-24
	TI	SN74LS20	870-26
74LS21	**Fairchild**	**74LS21**	★**5311**
			868-160
	Goldstar	**GD74LS21**	★**1066**
			868-161
	Hitachi	HD74LS21	868-162
	Motorola	**SN74LS21**	★**1122**
			868-164
	National	DM74LS21	868-166
	Panasonic	DN74LS21	868-167
	SGS	74LS21	868-169
	Signetics	**74LS21**	★**1156**
			868-171
	TI	SN74LS21	868-173
74LS212			
	TI	SN74LS212	3832-1
74LS213			
	TI	SN74LS213	3832-2
74LS219			
	TI	SN74LS219A	3831-107
74LS22	Fairchild	74LS22	870-90
	Hitachi	HD74LS22	870-91
	Motorola	**SN74LS22**	★**1122**
			870-93
	National	DM74LS22	870-95
	Panasonic	DN74LS22	870-96
	SGS	74LS22	870-98
	TI	SN74LS22	870-100
74LS221			
	Goldstar	**GD74LS221**	★**1066**
			880-131
	Hitachi	HD74LS221	880-132
	Motorola	**SN74LS221**	★**1131**
			880-134
	National	DM74LS221	880-136
	TI	SN74LS221	880-139
74LS222			
	TI	SN74LS222	3809-8
74LS224			
	TI	SN74LS224	3809-9
74LS227			
	TI	SN74LS227	3809-12
74LS228			
	TI	SN74LS228	3809-13
74LS24	TI	SN74LS24	888-12
74LS240			
	Fairchild	**74LS240**	★**5311**
			883-151
			2882-46
	Goldstar	**GD74LS240**	★**1066**
			883-153
			2882-48
	Hitachi	HD74LS240	883-154
	MMI	SN74LS240	2882-52
	Motorola	**SN74LS240**	★**1124**
			883-160
			2882-56
	National	DM74LS240	883-163
	Panasonic	DN74LS240	884-106
			(Continued)
74LS240			
	Signetics	**74LS240**	★**1157**
			883-164
			2882-62
	TI	SN74LS240	883-166
			2883-2
74LS241			
	Fairchild	**74LS241**	★**5311**
			884-33
			2881-59
	Goldstar	**GD74LS241**	★**1066**
			884-35
			2881-62
	Hitachi	HD74LS241	884-37
			2882-3
	Motorola	**SN74LS241**	★**1124**
			884-44
			2882-18
	National	DM74LS241	884-47
			2882-22
	Panasonic	DN74LS241	884-108
	Signetics	**74LS241**	★**1157**
			884-50
			2882-28
	TI	SN74LS241	884-52
			2882-37
74LS242			
	Fairchild	74LS242	883-71
			2888-37
	Hitachi	HD74LS242	883-74
			2888-40
	Motorola	**SN74LS242**	★**1124**
			883-78
			2888-41
	National	DM74LS242	883-82
			2888-43
	Signetics	**74LS242**	★**1158**
			883-88
			2888-45
	TI	SN74LS242	883-92
			2888-49
74LS243			
	Fairchild	74LS243	883-72
			2888-38
	Goldstar	**GD74LS243**	★**1066**
			883-73
			2888-39
	Hitachi	HD74LS243	883-75
			2890-58
	Motorola	**SN74LS243**	★**1124**
			883-79
			2888-42
	National	DM74LS243	883-83
			2888-44
	Signetics	**74LS243**	★**1158**
			883-89
			2888-46
	TI	SN74LS243	883-93
			2888-50
74LS244			
	Fairchild	**74LS244**	★**5311**
			884-85
			2881-60
	Goldstar	**GD74LS244**	★**1066**
			884-86
			2882-1
	Hitachi	HD74LS244	884-87
			2882-4
	Motorola	**SN74LS244**	★**1124**
			884-92
			2882-19
	National	DM74LS244	2882-23
	Panasonic	DN74LS244	884-107
	Signetics	**74LS244**	★**1158**
			2882-29
	TI	SN74LS244	884-94
			2882-38
74LS245			
	Fairchild	**74LS245**	★**5311**
			885-103
			2890-55
	Goldstar	**GD74LS245**	★**1066**
			885-104
			2890-25
	Hitachi	HD74LS245	885-105
	Motorola	**SN74LS245**	★**1124**
			(Continued)

¶ Indicates page number in Application Note Directory.
★ Indicates additional data is provided on the page noted.

Base Number	Source	Device	Page-Line
74LS245			
	Motorola	SN74LS245	885-111
			2890-63
	National	DM74LS245	885-114
			2890-66
	Panasonic	DN74LS245	885-115
	Signetics	**74LS245**	★**1158**
			885-118
			2891-1
	TI	74LS245	¶ 361-6
		SN74LS245	885-124
			2890-33
74LS247			
	Fairchild	**74LS247**	★**5311**
			2875-104
	Hitachi	HD74LS247	2875-108
	Motorola	**SN74LS247**	★**1130**
			2875-113
	National	DM74LS247	2875-119
	TI	SN74LS247	2875-129
74LS248			
	Fairchild	**74LS248**	★**5311**
			2875-63
	Hitachi	HD74LS248	2875-67
	Motorola	**SN74LS248**	★**1130**
			2875-74
	National	DM74LS248	2875-80
	TI	SN74LS248	2875-89
74LS249			
	Fairchild	**74LS249**	★**5311**
			2875-41
	Hitachi	HD74LS249	2875-43
	Motorola	**SN74LS249**	★**1130**
			2875-48
	National	DM74LS249	2875-52
	TI	SN74LS249	2875-57
74LS251			
	Fairchild	**74LS251**	★**5311**
			880-50
	Goldstar	**GD74LS251**	★**1066**
			880-51
	Hitachi	HD74LS251	880-52
	Motorola	**SN74LS251**	★**1129**
			880-54
	National	DM74LS251	880-56
	Panasonic	DN74LS251	880-57
	SGS	74LS251	880-59
	Signetics	**74LS251**	★**1158**
			880-60
	TI	SN74LS251	880-61
			1462-67
74LS253			
	Fairchild	**74LS253**	★**5311**
			878-45
	Goldstar	**GD74LS253**	★**1066**
			878-46
	Hitachi	HD74LS253	878-47
	Motorola	**SN74LS253**	★**1129**
			878-49
	National	DM74LS253	878-51
	Panasonic	DN74LS253	878-52
	SGS	74LS253	878-54
	Signetics	**74LS253**	★**1158**
			878-56
	TI	SN74LS253	878-58
74LS256			
	Fairchild	**74LS256**	★**5311**
			875-19
	Motorola	**SN74LS256**	★**1126**
			875-21
	SGS	T74LS256	875-23
	Signetics	**74LS256**	★**1158**
			875-24
74LS257			
	Fairchild	**74LS257**	★**5311**
			879-47
	Goldstar	**GD74LS257A**	★**1066**
			879-48
	Hitachi	HD74LS257	879-49
	Motorola	**SN74LS257A**	★**1129**
			879-51
	National	DM74LS257B	879-53
	Panasonic	DN74LS257A	879-54
	SGS	74LS257	879-56
	Signetics	**74LS257A**	★**1158**

(Continued)

Base Number	Source	Device	Page-Line
74LS257			
	Signetics	74LS257A	879-58
	TI	SN74LS257B	879-60
74LS258			
	Fairchild	**74LS258**	★**5311**
			878-133
	Goldstar	**GD74LS258**	★**1066**
			878-134
	Hitachi	HD74LS258	878-135
	Motorola	**SN74LS258A**	★**1129**
			878-137
	National	DM74LS258B	878-139
	Panasonic	DN74LS258A	878-140
	SGS	74LS258	878-142
	Signetics	**74LS258A**	★**1158**
			878-145
	TI	SN74LS258B	878-147
74LS259			
	Fairchild	**74LS259**	★**5311**
			875-139
	Goldstar	**GD74LS259**	★**1066**
			875-140
	Hitachi	HD74LS259	875-141
	Motorola	**SN74LS259**	★**1126**
			875-143
	National	DM74LS259	875-145
	SGS	74LS259	875-147
	Signetics	**74LS259**	★**1158**
			875-149
	TI	SN74LS259B	875-150
			1462-60
74LS26	**Fairchild**	**74LS26**	★**5311**
			871-121
	Hitachi	HD74LS26	871-122
	Motorola	**SN74LS26**	★**1122**
			871-124
	National	DM74LS26	871-126
	Panasonic	DN74LS26	871-127
	SGS	T74LS26	871-128
	Signetics	**74LS26**	★**1156**
			871-130
	TI	SN74LS26	871-132
74LS260			
	Fairchild	**74LS260**	★**5311**
			865-19
	Motorola	**SN74LS260**	★**1122**
			865-21
	Panasonic	DN74LS260	865-22
	SGS	T74LS260	865-24
	Signetics	**74LS260**	★**1158**
			865-26
74LS261			
	TI	SN74LS261	855-129
74LS266			
	Fairchild	**74LS266**	★**5311**
			874-167
	Hitachi	HD74LS266	874-168
	Motorola	**SN74LS266**	★**1123**
			874-170
	National	DM74LS266	874-172
	Panasonic	DN74LS266	874-173
	SGS	74LS266	874-175
	Signetics	**74LS266**	★**1158**
			865-88
	TI	SN74LS266	874-180
74LS27	**Fairchild**	**74LS27**	★**5311**
			865-53
	Goldstar	**GD74LS27**	★**1066**
			865-54
	Hitachi	HD74LS27	865-55
	Motorola	**SN74LS27**	★**1122**
			865-57
	National	DM74LS27	865-59
	Panasonic	DN74LS27	865-60
	SGS	74LS27	865-62
	Signetics	**74LS27**	★**1156**
			865-64
	TI	SN74LS27	865-65
74LS273			
	Fairchild	**74LS273**	★**5311**
			866-151
	Goldstar	**GD74LS273**	★**1066**
			866-152
	Hitachi	HD74LS273	866-153
	Motorola	**SN74LS273**	★**1126**
			866-156

(Continued)

Base Number	Source	Device	Page-Line
74LS273			
	SGS	T74LS273	866-157
	Signetics	74LS273	866-159
	TI	SN74LS273	866-161
74LS275			
	TI	SN74LS275	843-13
74LS279			
	Fairchild	**74LS279**	★**5311**
			875-80
	Hitachi	HD74LS279	875-81
	Motorola	**SN74LS279**	★**1126**
			875-83
	National	DM74LS279	875-85
	Panasonic	DN74LS279	875-86
	SGS	74LS279	875-88
	TI	SN74LS279A	875-91
74LS28	**Fairchild**	**74LS28**	★**5311**
			874-21
	Motorola	**SN74LS28**	★**1122**
			874-27
	Panasonic	DN74LS28	874-31
	SGS	T74LS28	874-35
	TI	SN74LS28	874-42
74LS280			
	Goldstar	**GD74LS280**	★**1066**
			889-23
	Hitachi	HD74LS280	889-24
	Motorola	**SN74LS280**	★**1132**
			889-26
	TI	SN74LS280	889-28
74LS283			
	Fairchild	**74LS283**	★**5311**
			856-39
	Goldstar	**GD74LS283**	★**1066**
			856-41
	Hitachi	HD74LS283A	856-42
	Motorola	**SN74LS283**	★**1132**
			856-46
	National	DM74LS283	856-50
	Panasonic	DN74LS283	856-52
	SGS	74LS283	856-56
	Signetics	**74LS283**	★**1158**
			856-60
	TI	SN74LS283	856-64
74LS289			
	Fairchild	74LS289	3831-59
	TI	SN74LS289A	3831-101
74LS290			
	Fairchild	**74LS290**	★**5311**
			860-74
	Hitachi	HD74LS290	860-76
	Motorola	**SN74LS290**	★**1127**
			860-80
	National	DM74LS290	860-84
	Panasonic	DN74LS290	860-86
	SGS	74LS290	860-90
	Signetics	**74LS290**	★**1158**
			860-94
	TI	SN74LS290	860-98
74LS292			
	TI	SN74LS292	862-60
74LS293			
	Fairchild	**74LS293**	★**5311**
			859-63
	Hitachi	HD74LS293	859-66
	Motorola	**SN74LS293**	★**1127**
			859-70
	National	DM74LS293	859-74
	Panasonic	DN74LS293	859-76
	SGS	74LS293	859-80
	Signetics	**74LS293**	★**1158**
			859-84
	TI	SN74LS293	859-88
74LS294			
	TI	SN74LS294	862-58
74LS295			
	Fairchild	**74LS295**	★**5311**
			881-15
		74LS295A	★**5311**
			3854-81
	Motorola	**SN74LS295A**	★**1129**
			881-17
			3854-95
	SGS	74LS295A	881-19
	Signetics	**74LS295B**	★**1158**
			881-21

(Continued)

Base Number	Source	Device	Page-Line
74LS295			
	TI	SN74LS295B	881-22
			3854-110
74LS297			
	TI	SN74LS297	887-62
			¶ 361-2
			¶ 361-3
			3375-43
74LS298			
	Fairchild	**74LS298**	★**5311**
			879-101
	Hitachi	HD74LS298	879-104
	Motorola	**SN74LS298**	★**1129**
			879-108
	National	DM74LS298	879-112
	SGS	74LS298	879-114
	Signetics	**74LS298**	★**1158**
			879-116
	TI	SN74LS298	879-120
74LS299			
	Fairchild	**74LS299**	★**5311**
			882-140
			3855-93
	Goldstar	**GD74LS299**	★**1066**
			882-142
	Hitachi	HD74LS299	882-143
	Motorola	**SN74LS299**	★**1129**
			882-146
	TI	SN74LS299	882-148
74LS30	**Fairchild**	**74LS30**	★**5311**
			872-26
	Goldstar	**GD74LS30**	★**1066**
			872-27
	Hitachi	HD74LS30	872-28
	Motorola	**SN74LS30**	★**1122**
			872-30
	National	DM74LS30	872-32
	Panasonic	DN74LS30	872-33
	SGS	74LS30	872-35
	Signetics	**74LS30**	★**1156**
			872-37
	TI	SN74LS30	872-39
74LS301			
	Signetics	**74LS301**	★**4166**
			3832-54
74LS31	TI	SN74LS31	886-161
74LS319			
	TI	SN74LS319A	3831-102
74LS32	**Fairchild**	**74LS32**	★**5311**
			873-52
	Goldstar	**GD74LS32**	★**1066**
			873-53
	Hitachi	HD74LS32	873-54
	Motorola	**SN74LS32**	★**1122**
			873-56
	National	DM74LS32	873-58
	Panasonic	DN74LS32	873-59
	SGS	74LS32	873-61
	Signetics	**74LS32**	★**1156**
			873-63
	TI	SN74LS32	873-65
74LS320			
	TI	SN74LS320	887-60
74LS321			
	TI	SN74LS321	887-61
74LS322			
	AMD	SN74LS322	856-74
	Fairchild	**74LS322**	★**5311**
			882-91
	Goldstar	**GD74LS322**	★**1066**
			856-76
	Motorola	**SN74LS322A**	★**1129**
			856-78
	TI	SN74LS322A	856-80
74LS323			
	AMD	SN74LS323	882-137
			3855-90
	Fairchild	**74LS323**	★**5311**
			882-141
			3855-94
	Motorola	**SN74LS323**	★**1129**
			882-147
	TI	SN74LS323	882-149
			3855-95
74LS33	**Fairchild**	**74LS33**	★**5311**
			865-78

(Continued)

Arranged alphanumerically from left to right.

Base Number	Source	Device	Page-Line
74LS33	**Motorola**	**SN74LS33**	**★1122**
			865-80
	Panasonic	DN74LS33	865-81
	SGS	T74LS33	865-83
	Signetics	**74LS33**	**★1156**
			865-85
	TI	SN74LS33	865-87
74LS341			
	MMI	SN74LS341	884-41
			2882-11
74LS344			
	MMI	SN74LS344	884-90
			2882-12
74LS347			
	Fairchild	**74LS347**	**★5311**
			2875-93
	TI	SN74LS347	2875-98
74LS348			
	Motorola	**SN74LS348**	**★1131**
			888-169
	TI	SN74LS348	888-171
			1462-80
74LS352			
	Fairchild	**74LS352**	**★5311**
			878-22
	Motorola	**SN74LS352**	**★1129**
			878-24
	National	DM74LS352	878-26
	SGS	T74LS352	878-28
	Signetics	**74LS352**	**★1158**
			878-30
	TI	SN74LS352	878-32
74LS353			
	Fairchild	**74LS353**	**★5311**
			877-105
	Motorola	**SN74LS353**	**★1129**
			877-107
	National	DM74LS353	877-109
	SGS	T74LS353	877-111
	Signetics	**74LS353**	**★1158**
			877-113
	TI	SN74LS353	877-115
74LS354			
	TI	SN74LS354	880-34
74LS355			
	TI	SN74LS355	880-31
74LS356			
	TI	SN74LS356	880-35
74LS357			
	TI	SN74LS357	880-32
74LS363			
	Signetics	**74LS363**	**★1158**
			876-24
74LS364			
	Signetics	**74LS364**	**★1158**
			866-105
74LS365			
	Fairchild	**74LS365**	**★5311**
			857-8
	Goldstar	**GD74LS365A**	**★1066**
			857-11
			2883-5
	Hitachi	HD74LS365A	857-12
	Motorola	**SN74LS365A**	**★1124**
			857-16
	National	DM74LS365A	857-20
	Panasonic	DN74LS365A	857-22
	SGS	74LS365A	857-26
		T74LS365A	857-28
			2883-7
	Signetics	**74LS365A**	**★1158**
			857-32
	TI	SN74LS365A	857-34
			2883-9
74LS366			
	Fairchild	**74LS366**	**★5311**
			858-19
	Goldstar	**GD74LS366**	**★1066**
			858-21
			2883-11
	Hitachi	HD74LS366A	864-7
	Motorola	**SN74LS366A**	**★1124**
			858-26
	National	DM74LS366A	858-30
	Panasonic	DN74LS366A	858-32
	SGS	74LS366A	858-36
		T74LS366A	858-38
			(Continued)
74LS366			
	SGS	T74LS366A	2883-13
	Signetics	**74LS366A**	**★1158**
			858-42
	TI	SN74LS366A	858-44
			2883-15
74LS367			
	Fairchild	**74LS367**	**★5311**
			857-9
	Goldstar	FD74LS367A	857-10
		GD74LS367A	**★1066**
			2883-6
	Hitachi	HD74LS367A	857-13
			864-127
	Motorola	**SN74LS367A**	**★1124**
			857-17
	National	DM74LS367A	857-21
	Panasonic	DN74LS367A	857-23
	SGS	74LS367A	857-27
		T74LS367A	857-29
			2883-8
	Signetics	**74LS367A**	**★1158**
			857-33
	TI	SN74LS367A	857-35
			2883-10
74LS368			
	Fairchild	**74LS368**	**★5311**
			858-20
	Goldstar	**GD74LS368**	**★1066**
			858-22
			2883-12
	Hitachi	HD74LS368A	858-23
	Motorola	**SN74LS368A**	**★1124**
			858-27
	National	DM74LS368A	858-31
	Panasonic	DN74LS368A	858-33
	SGS	74LS368A	858-37
		T74LS368A	858-39
			2883-14
	Signetics	**74LS368A**	**★1158**
			858-43
	TI	SN74LS368A	858-45
			2883-16
74LS37	**Fairchild**	**74LS37**	**★5311**
			871-65
	Hitachi	HD74LS37	871-66
	Motorola	**SN74LS37**	**★1122**
			871-68
	National	DM74LS37	871-70
	Panasonic	DN74LS37	871-71
	SGS	74LS37	871-73
	Signetics	**74LS37**	**★1156**
			871-75
	TI	SN74LS37	871-77
74LS373			
	Fairchild	**74LS373**	**★5311**
			876-10
	Goldstar	**GD74LS373**	**★1066**
			876-12
	Hitachi	HD74LS373	876-14
	Motorola	**SN74LS373**	**★1126**
			876-17
	National	DM74LS373	876-19
	Panasonic	DN74LS373	876-20
	SGS	T74LS373	876-21
	Signetics	**74LS373**	**★1158**
			876-25
	TI	SN74LS373	876-30
74LS374			
	Fairchild	**74LS374**	**★5311**
			867-10
	Goldstar	**GD74LS374**	**★1066**
			867-12
	Hitachi	HD74LS374	867-13
	Motorola	**SN74LS374**	**★1126**
			867-16
			¶ 380-3
	National	DM74LS374	867-18
	SGS	T74LS374	867-19
	Signetics	**74LS374**	**★1158**
			867-21
	TI	SN74LS374	867-23
74LS375			
	Fairchild	**74LS375**	**★5311**
			875-42
	Hitachi	HD74LS375	875-44
			(Continued)
74LS375			
	Motorola	**SN74LS375**	**★1126**
			875-48
	Signetics	**74LS375**	**★1158**
			875-55
	TI	SN74LS375	875-59
74LS377			
	Fairchild	**74LS377**	**★5311**
			867-41
	Goldstar	**GD74LS377**	**★1066**
			867-42
	Motorola	**SN74LS377**	**★1126**
			867-45
			¶ 380-3
	SGS	T74LS377	867-46
	Signetics	**74LS377**	**★1158**
			867-48
	TI	SN74LS377	867-50
74LS378			
	AMD	SN74LS378	866-83
	Fairchild	**74LS378**	**★5311**
			866-85
	Motorola	**SN74LS378**	**★1126**
			866-87
	SGS	T74LS378	866-89
	Signetics	**74LS378**	**★1158**
			866-91
	TI	SN74LS378	866-93
74LS379			
	AMD	SN74LS379	864-330
	Fairchild	**74LS379**	**★5311**
			864-332
	Motorola	**SN74LS379**	**★1126**
			864-334
	SGS	T74LS379	864-336
	TI	SN74LS379	864-338
74LS38	**Fairchild**	**74LS38**	**★5311**
			871-104
	Goldstar	**GD74LS38**	**★1066**
			871-105
	Hitachi	HD74LS38	871-106
	Motorola	**SN74LS38**	**★1122**
			871-108
	National	DM74LS38	871-110
	Panasonic	DN74LS38	871-111
	SGS	74LS38	871-196
	Signetics	**74LS38**	**★1156**
			871-113
	TI	SN74LS38	871-115
74LS380			
	MMI	**SN74LS380**	**★1100**
			882-113
	National	DM74LS380	882-115
74LS381			
	TI	SN74LS381A	855-69
74LS382			
	TI	SN74LS382	855-70
74LS384			
	AMD	SN74LS384	855-150
	TI	SN74LS384	855-151
74LS385			
	AMD	SN74LS385	854-11
	Motorola	**SN74LS385**	**★1132**
			854-13
	TI	SN74LS385	854-15
74LS386			
	Fairchild	**74LS386**	**★5311**
			874-116
	Hitachi	HD74LS386	874-119
	Motorola	**SN74LS386**	**★1123**
			874-123
	National	DM74LS386	874-95
	Panasonic	DN74LS386	874-128
	TI	SN74LS386A	874-136
74LS388			
	AMD	SN74LS388	864-314
74LS390			
	Fairchild	**74LS390**	**★5311**
			861-34
	Goldstar	**GD74LS390**	**★1066**
			861-36
	Hitachi	HD74LS390	861-37
	Motorola	**SN74LS390**	**★1127**
			861-41
	National	DM74LS390	861-44
	Panasonic	DN74LS390	861-45
	SGS	T74LS390	861-49
			(Continued)
74LS390			
	Signetics	**74LS390**	**★1158**
			861-53
	TI	SN74LS390	861-57
74LS393			
	Fairchild	**74LS393**	**★5311**
			859-29
	Goldstar	**GD74LS393**	**★1066**
			859-30
	Hitachi	HD74LS393	859-31
	Motorola	**SN74LS393**	**★1127**
			859-33
	National	DM74LS393	859-35
	Panasonic	DN74LS393	859-36
	SGS	T74LS393	859-38
	Signetics	**74LS393**	**★1158**
			859-40
	TI	SN74LS393	859-42
74LS395			
	Fairchild	**74LS395**	**★5311**
			881-104
			3854-82
	Goldstar	**GD74LS395A**	**★1066**
			881-105
	Motorola	**SN74LS395**	**★1129**
			3854-96
	Panasonic	DN74LS395A	881-106
	SGS	T74LS395	881-108
			3854-104
	Signetics	**74LS395A**	**★1158**
			881-110
	TI	SN74LS395A	881-111
			3854-111
74LS396			
	TI	SN74LS396	876-142
74LS398			
	Fairchild	74LS398	879-102
	Motorola	**SN74LS398**	**★1129**
			879-109
	TI	SN74LS398	879-121
74LS399			
	AMD	SN74LS399	879-97
	Fairchild	74LS399	879-103
	Motorola	**SN74LS399**	**★1129**
			879-110
	TI	SN74LS399	879-122
74LS40	**Fairchild**	**74LS40**	**★5311**
			870-58
	Hitachi	HD74LS40	870-59
	Motorola	**SN74LS40**	**★1122**
			870-61
		SN74LS40B	¶ 394-13
	National	DM74LS40	870-63
	Panasonic	DN74LS40	870-64
	SGS	74LS40	870-66
	Signetics	**74LS40**	**★1156**
			870-68
	TI	SN74LS40	870-70
74LS42	**Fairchild**	**74LS42**	**★5311**
			862-133
	Goldstar	**GD74LS42**	**★1066**
			862-134
	Hitachi	HD74LS42	862-135
	Motorola	**SN74LS42**	**★1130**
			862-137
	National	DM74LS42	862-139
	Panasonic	DN74LS42	862-140
	SGS	74LS42	862-142
	Signetics	**74LS42**	**★1156**
			862-144
	TI	SN74LS42	862-146
74LS422			
	TI	SN74LS422	880-110
74LS423			
	TI	SN74LS423	880-140
74LS440			
	TI	SN74LS440	883-104
			2888-7
74LS441			
	TI	SN74LS441	883-105
			2888-8
74LS442			
	TI	SN74LS442	883-106
			2888-10
74LS443			
	TI	SN74LS443	883-107
			2888-11

¶ Indicates page number in Application Note Directory.
★ Indicates additional data is provided on the page noted.

Base Number	Source	Device	Page-Line
74LS444	TI	SN74LS444	883-108 2888-12
74LS445	**Signetics**	**74LS445**	**★1158** 862-86
	TI	SN74LS445	862-87
74LS446	TI	SN74LS446	883-96 2888-19
74LS447	**Fairchild**	**74LS447**	**★5311** 2875-94
	TI	SN74LS447	2875-99
74LS448	TI	SN74LS448	883-109 2888-9
74LS449	TI	SN74LS449	883-97 2888-20
74LS450	**MMI**	**SN74LS450**	**★1100** 880-86
	National	DM74LS450	880-88
74LS451	**MMI**	**SN74LS451**	**★1100** 878-68
	National	DM74LS451	878-70
74LS453	**MMI**	**SN74LS453**	**★1100** 879-132
	National	DM74LS453	879-134
74LS460	**MMI**	**SN74LS460**	**★1100** 886-152
74LS461	**MMI**	**SN74LS461**	**★1100** 859-95
	National	DM74LS461	859-97
74LS465	TI	SN74LS465	857-68
74LS466	TI	SN74LS466	858-65
74LS467	TI	SN74LS467	857-69
74LS468	TI	SN74LS468	858-66
74LS469	**MMI**	**SN74LS469**	**★1100** 859-121
	National	DM74LS469	814-41
74LS47	**Fairchild**	**74LS47**	**★5311** 2875-105
	Hitachi	HD74LS47	2875-109
	Motorola	**SN74LS47**	**★1130** 2875-114
	National	DM74LS47	2875-120
	TI	SN74LS47	2875-130
74LS471	National	DM74LS471	3815-16
74LS48	**Fairchild**	**74LS48**	**★5311** 2875-64
	Hitachi	HD74LS48	2875-68
	Motorola	**SN74LS48**	**★1130** 2875-75
	National	DM74LS48	2875-81
	TI	SN74LS48	2875-90
74LS481	TI	SN74LS481	1411-20
74LS4891	National	DM74LS4891	862-57
74LS49	Fairchild	74LS49	2875-42
	Hitachi	HD74LS49	2875-44
	Motorola	**SN74LS49**	**★1130** 2875-49
	National	DM74LS49	2875-53
	TI	SN74LS49	2875-58
74LS490	**Fairchild**	**74LS490**	**★5311** 861-35
	Hitachi	HD74LS490	861-38
	Motorola	**SN74LS490**	**★1127** 861-42
	Panasonic	DN74LS490	861-46
	SGS	T74LS490	861-50
	Signetics	**74LS490**	**★1159** (Continued)
74LS490	Signetics	74LS490	861-54
	TI	SN74LS490	861-58
74LS491	**MMI**	**SN74LS491**	**★1100** 862-55
74LS498	MMI	S74LS498	882-109
		SN74LS498	**★1100**
74LS502	**Fairchild**	**74LS502**	**★5311** 888-136
74LS503	**Fairchild**	**74LS503**	**★5311** 888-137
74LS51	**Fairchild**	**74LS51**	**★5311** 872-91
	Goldstar	**GD74LS51**	**★1066** 872-92
	Hitachi	HD74LS51	872-93
	Motorola	**SN74LS51**	**★1123** 872-95
	National	DM74LS51	872-97
	Panasonic	DN74LS51	872-98
	SGS	T74LS51	872-101
	Signetics	**74LS51**	**★1156** 872-103
	TI	SN74LS51	872-105
74LS533	**Fairchild**	**74LS533**	**★5311** 876-72
74LS534	**Fairchild**	**74LS534**	**★5311** 866-131
74LS54	**Fairchild**	**74LS54**	**★5311** 872-170
	Hitachi	HD74LS54	872-171
	Motorola	**SN74LS54**	**★1123** 872-173
	National	DM74LS54	872-175
	Panasonic	DN74LS54	872-176
	SGS	74LS54	872-178
	Signetics	**74LS54**	**★1156** 872-180
	TI	SN74LS54	872-182
74LS540	**Fairchild**	**74LS540**	**★5311** 883-152 2882-47
	Motorola	**SN74LS540**	**★1125** 883-161 2882-57
	Signetics	**74LS540**	**★1159** 883-165 2882-63
	TI	SN74LS540	883-167 2883-3
74LS541	Fairchild	74LS541	884-34 2881-61
	Goldstar	**GD74LS541**	**★1066** 884-36 2882-2
	Motorola	**SN74LS541**	**★1125** 884-45 2882-20
	Signetics	**74LS541**	**★1159** 884-51 2882-30
	TI	SN74LS541	884-53 2882-39
74LS546	**MMI**	**SN74LS546**	**★1107** 882-22
74LS547	**MMI**	**SN74LS547**	**★1107** 875-157
74LS548	**MMI**	**SN74LS548**	**★1107** **★1110** 844-99
74LS549	**MMI**	**SN74LS549**	**★1107** **★1110** 876-94
74LS55	**Fairchild**	**74LS55**	**★5311** 872-136 (Continued)
74LS55	Hitachi	HD74LS55	872-137
	Motorola	**SN74LS55**	**★1123** 872-139
	National	DM74LS55	872-141
	Panasonic	DN74LS55	872-142
	SGS	74LS55	872-144
	TI	SN74LS55	872-145
74LS56	TI	SN74LS56	862-61
74LS563	**Fairchild**	**74LS563**	**★5311** 876-73
74LS564	**Fairchild**	**74LS564**	**★5311** 876-74
74LS566	**MMI**	**SN74LS566**	**★1107** 882-20
74LS567	**MMI**	**SN74LS567**	**★1107** 875-154
74LS568	**Motorola**	**SN74LS568**	**★1127** 861-114
	Signetics	**74LS568A**	**★1159** 861-79
74LS569	**Motorola**	**SN74LS569**	**★1127** 860-13
	Signetics	**74LS569A**	**★1159** 860-14
74LS57	TI	SN74LS57	862-62
74LS573	**Fairchild**	**74LS573**	**★5311** 876-11
	Goldstar	**GD74LS573**	**★1066** 876-13
74LS574	**Fairchild**	**74LS574**	**★5311** 867-11
74LS589	TI	SN74LS589	882-85
74LS590	**Goldstar**	**GD74LS590**	**★1066** 859-101
	TI	SN74LS590	859-103
74LS591	TI	SN74LS591	859-104
74LS592	TI	SN74LS592	859-100
74LS593	TI	SN74LS593	862-53
74LS594	TI	SN74LS594	882-96
74LS595	TI	SN74LS595	882-97
74LS596	TI	SN74LS596	882-98
74LS597	TI	SN74LS597	882-86
74LS598	TI	SN74LS598	882-87
74LS599	TI	SN74LS599	882-99
74LS600	TI	SN74LS600A	887-2 ¶ 441-5
74LS601	TI	SN74LS601A	887-3 ¶ 441-5
74LS602	**Fairchild**	**74LS602**	**★5311**
	TI	SN74LS602A	887-4
74LS603	TI	SN74LS603A	887-5
74LS604	**Motorola**	**SN74LS604**	**★1129** 875-115
	TI	SN74LS604	875-119
74LS605	**Motorola**	**SN74LS605**	**★1129** 875-116
	TI	SN74LS605	875-120
74LS606	**Motorola**	**SN74LS606**	**★1129** 875-117
	TI	SN74LS606	875-121
74LS607	**Motorola**	**SN74LS607**	**★1129** 875-118
	TI	SN74LS607	875-122
74LS608	TI	SN74LS608	2892-61
74LS610	TI	SN74LS610	887-36 ¶ 369-7
74LS611	TI	SN74LS611	887-37 ¶ 369-7
74LS612	**Goldstar**	**GD74LS612**	**★1066** 887-34
	TI	SN74LS612	887-38 ¶ 369-7
74LS613	TI	SN74LS613	887-39 ¶ 369-7
74LS62	National	DM74LS62	876-134
74LS620	**Motorola**	**SN74LS620**	**★1125** 886-102
	Signetics	**74LS620**	**★1159** 886-106
	TI	SN74LS620	886-108 2890-34
74LS621	**Motorola**	**SN74LS621**	**★1125** 886-58
	Signetics	**74LS621**	**★1159** 886-62
	TI	SN74LS621	886-64 2890-17
74LS622	**Motorola**	**SN74LS622**	**★1125** 886-59
	Signetics	**74LS622**	**★1159** 886-63
	TI	SN74LS622	886-65 2890-18
74LS623	**Motorola**	**SN74LS623**	**★1125** 886-103
	Signetics	**74LS623**	**★1159** 886-107
	TI	SN74LS623	886-109 2890-35
74LS624	TI	SN74LS624	887-76 3376-14
74LS625	TI	SN74LS625	887-92 3376-48
74LS626	TI	SN74LS626	887-93 3376-49
74LS627	TI	SN74LS627	887-94 3376-50
74LS628	TI	SN74LS628	887-77 3376-15
74LS629	TI	SN74LS629	887-95 3376-51
74LS63	TI	SN74LS63	888-21
74LS630	Intech	SN74LS630	¶ 400-9
	TI	SN74LS630	887-13 ¶ 435-11 2878-60
74LS631	Intech	SN74LS631	¶ 400-9
	TI	SN74LS631	887-14 ¶ 435-11 2878-61
74LS636	TI	SN74LS636	887-8 2878-62
74LS637	TI	SN74LS637	887-9 2878-63
74LS638	TI	SN74LS638	884-128 2889-55

Arranged alphanumerically from left to right.

Base Number	Source	Device	Page-Line
74LS639			
	TI	SN74LS639	884-129
			2889-56
74LS640			
	Goldstar	**GD74LS640**	**★1066**
			885-12
			2890-26
	Hitachi	HS74LS640	885-13
			2890-60
	Mitsubishi	M74LS640-1	2890-27
	Motorola	**SN74LS640**	**★1125**
			885-16
			2890-64
	Signetics	**74LS640**	**★1159**
			885-19
			2890-30
		74LS640-1	**★1159**
			2890-31
	TI	SN74LS640	885-22
			2890-36
		SN74LS640-1	885-23
			2890-37
74LS641			
	Hitachi	HD74LS641	885-48
			2890-48
	Motorola	**SN74LS641**	**★1125**
			885-50
			2890-50
	Signetics	**74LS641**	**★1159**
			885-52
			2889-59
		74LS641-1	**★1159**
			885-53
			2889-60
	TI	SN74LS641	885-54
			2890-19
		SN74LS641-1	885-55
			2890-20
74LS642			
	Hitachi	HD74LS642	884-139
			2890-49
	Motorola	**SN74LS642**	**★1125**
			884-145
			2890-51
	Signetics	**74LS642**	**★1159**
			884-146
			2889-61
		74LS642-1	**★1159**
			884-147
			2889-62
	TI	SN74LS642	884-148
			2890-21
		SN74LS642-1	884-149
			2890-22
74LS643			
	Motorola	**SN74LS643**	**★1125**
			885-17
	TI	SN74LS643	885-24
			2890-38
		SN74LS643-1	885-25
			2890-39
74LS644			
	Motorola	**SN74LS644**	**★1125**
			885-143
	TI	SN74LS644	885-144
			2890-23
		SN74LS644-1	885-145
			2890-24
74LS645			
	Hitachi	HD74LS645	885-106
			2890-59
	MMI	SN74LS645	2890-28
		SN74LS645-1	2890-29
	Motorola	**SN74LS645**	**★1125**
			885-112
			2890-65
	Signetics	**74LS645**	**★1159**
			885-119
			2890-32
		74LS645-1	**★1159**
			885-120
	TI	SN74LS645	885-125
			2890-40
		SN74LS645-1	885-126
			2890-41
74LS646			
	Goldstar	**GD74LS646**	**★1066**
			886-23
			2890-56
	MMI	**SN74LS646**	**★1106**
			★1108
			885-134
	TI	SN74LS646	886-24
			2891-8
74LS647			
	MMI	**SN74LS647**	**★1107**
			★1108
			885-130
	TI	SN74LS647	885-167
			2890-53
74LS648			
	MMI	**SN74LS648**	**★1107**
			★1108
			885-30
	TI	SN74LS648	886-25
			2891-9
74LS649			
	MMI	**SN74LS649**	**★1107**
			★1108
			884-142
			★1107
			★1108
			2890-52
	TI	SN74LS649	885-168
			2890-54
74LS651			
	MMI	**SN74LS651**	**★1107**
			★1109
			885-31
	TI	SN74LS651	885-26
			886-26
74LS652			
	MMI	**SN74LS652**	**★1107**
			★1109
			885-135
	TI	SN74LS652	885-27
			886-27
74LS653			
	MMI	**SN74LS653**	**★1107**
			★1109
			884-143
	TI	SN74LS653	885-152
74LS654			
	MMI	**SN74LS654**	**★1107**
			★1109
			885-131
	TI	SN74LS654	885-155
74LS668			
	Motorola	**SN74LS668**	**★1127**
			861-98
	TI	SN74LS668	861-108
74LS669			
	Hitachi	HD74LS669	860-53
	Motorola	**SN74LS669**	**★1127**
			860-55
	TI	SN74LS669	859-152
74LS670			
	Fairchild	**74LS670**	**★5311**
			877-18
			3830-94
	Goldstar	**GD74LS670**	**★1066**
			877-19
			3830-95
	Hitachi	HD74LS670	877-20
			3830-96
	Motorola	**SN74LS670**	**★1128**
			877-22
			3830-98
	National	DM74LS670	877-24
			3830-100
	SGS	74LS670	877-26
			3830-101
	Signetics	74LS670	877-28
			3830-103
	TI	SN74LS670	877-29
			3830-104
74LS671			
	TI	SN74LS671	881-112
74LS672			
	TI	SN74LS672	881-113
74LS673			
	Motorola	**SN74LS673**	**★1129**
			883-25
	TI	SN74LS673	883-27
74LS674			
	Motorola	**SN74LS674**	**★1129**
			883-12
	Signetics	74LS674	¶ 431-17
	TI	SN74LS674	883-14
74LS68	TI	SN74LS68	861-60
74LS681			
	TI	SN74LS681	855-169
74LS682			
	Motorola	**SN74LS682**	**★1131**
			854-140
	TI	SN74LS682	854-147
74LS683			
	Motorola	**SN74LS683**	**★1131**
			854-121
	TI	SN74LS683	854-128
74LS684			
	Motorola	**SN74LS684**	**★1131**
			854-141
	TI	SN74LS684	854-148
74LS685			
	Motorola	**SN74LS685**	**★1132**
			854-122
	TI	SN74LS685	854-129
74LS686			
	Motorola	**SN74LS686**	**★1132**
			854-142
	TI	SN74LS686	854-149
74LS687			
	Motorola	**SN74LS687**	**★1132**
			854-123
	TI	SN74LS687	854-130
74LS688			
	Motorola	**SN74LS688**	**★1131**
			854-143
	TI	SN74LS688	854-150
74LS689			
	Motorola	**SN74LS689**	**★1132**
			854-124
	TI	SN74LS689	854-131
74LS69	TI	SN74LS69	859-43
74LS690			
	TI	SN74LS690	861-25
74LS691			
	TI	SN74LS691	858-115
74LS692			
	TI	SN74LS692	861-26
74LS693			
	TI	SN74LS693	858-116
74LS696			
	TI	SN74LS696	861-67
74LS697			
	TI	SN74LS697	859-107
74LS698			
	TI	SN74LS698	861-68
74LS699			
	TI	SN74LS699	859-108
74LS716			
	Motorola	**SN74LS716**	**★1128**
			862-43
74LS718			
	Motorola	**SN74LS718**	**★1128**
			862-37
74LS724			
	Motorola	**SN74LS724**	**★1131**
			887-78
74LS73	**Goldstar**	**GD74LS73**	**★1066**
			867-178
	Hitachi	HD74LS73A	868-1
	Motorola	**SN74LS73A**	**★1126**
			868-5
	National	DM74LS73A	868-9
	Panasonic	DN74LS73	868-11
	Signetics	**74LS73**	**★1156**
			868-15
	TI	SN74LS73A	868-19
74LS74	**Fairchild**	**74LS74**	**★5311**
			864-237
	Goldstar	**GD74LS74A**	**★1066**
			864-238
	Hitachi	HD74LS74A	864-239
	Motorola	**SN74LS74A**	**★1126**
			864-241
			(Continued)
74LS74	National	DM74LS74	864-243
	Panasonic	DN74LS74A	864-244
	SGS	74LS74	864-246
	Signetics	**74LS74A**	**★1156**
			864-248
	TI	SN74LS74A	864-250
74LS748			
	Motorola	**SN74LS748**	**★1131**
			888-162
74LS75	**Goldstar**	**GD74LS75**	**★1066**
			875-43
	Hitachi	HD74LS75	875-45
	Motorola	**SN74LS75**	**★1126**
			875-49
	National	DM74LS75	875-51
	Panasonic	DN74LS75	875-52
	Signetics	**74LS75**	**★1156**
			875-56
	TI	SN74LS75	875-60
74LS76	Hitachi	HD74LS76A	868-33
	Motorola	**SN74LS76A**	**★1126**
			868-35
	National	DM74LS76	868-37
	Panasonic	DN74LS76	868-38
	Signetics	**74LS76**	**★1156**
			868-40
	TI	SN74LS76A	868-42
74LS764			
	Signetics	**74LS764**	**★1160**
			2892-102
74LS765			
	Signetics	74LS765	¶ 431-17
74LS77	Hitachi	HD74LS77	875-63
	Motorola	**SN74LS77**	**★1126**
			875-65
	National	DM74LS77	875-67
74LS78	Hitachi	HD74LS78A	867-143
	Motorola	**SN74LS78A**	**★1126**
			867-145
	National	DM74LS78	867-147
	Panasonic	DN74LS78	867-148
	TI	SN74LS78A	867-150
74LS783			
	Motorola	**SN74LS783**	**★1129**
			877-93
			1470-48
74LS793			
	MMI	**SN74LS793**	**★1107**
			★1111
			875-159
74LS794			
	MMI	**SN74LS794**	**★1107**
			★1111
			882-24
74LS795			
	Motorola	**SN74LS795**	**★1124**
			857-60
74LS796			
	Motorola	**SN74LS796**	**★1125**
			857-61
74LS797			
	Motorola	**SN74LS797**	**★1125**
			857-62
74LS798			
	Motorola	**SN74LS798**	**★1125**
			857-63
74LS83	**Fairchild**	**74LS83**	**★5311**
			856-40
	Hitachi	HD74LS83A	856-43
	Motorola	**SN74LS83A**	**★1132**
			856-47
	National	DM74LS83A	856-51
	Panasonic	DN74LS83A	856-53
	SGS	74LS83A	856-57
	Signetics	**74LS83A**	**★1156**
			856-61
	TI	SN74LS83A	856-65
74LS848			
	Motorola	**SN74LS848**	**★1131**
			888-176
74LS85	**Fairchild**	**74LS85**	**★5311**
			854-46
	Goldstar	**GD74LS85**	**★1066**
			854-49
	Hitachi	HD74LS85	854-50
	Motorola	**SN74LS85**	**★1131**
			854-55
			(Continued)

¶ Indicates page number in Application Note Directory.
★ Indicates additional data is provided on the page noted.

Base Number	Source	Device	Page-Line
74LS85	National	DM74LS85	854-59
	Panasonic	DN74LS85	854-60
	SGS	74LS85	854-62
	Signetics	**74LS85**	**★1156** 854-66
	TI	SN74LS85	854-71
74LS86	**Fairchild**	**74LS86**	**★5311** 874-117
	Goldstar	**GD74LS86**	**★1066** 874-118
	Hitachi	HD74LS86	874-120
	Motorola	**SN74LS86**	**★1123** 874-124
	National	DM74LS86	874-127
	Panasonic	DN74LS86	874-129
	SGS	74LS86	874-131
	Signetics	**74LS86**	**★1156** 874-133
	TI	SN74LS86A	874-137
74LS90	**Fairchild**	**74LS90**	**★5311**
	Goldstar	**GD74LS90**	**★1066** 860-75
	Hitachi	HD74LS90	860-77
	Motorola	**SN74LS90**	**★1127** 860-81
	National	DM74LS90	860-85
	Panasonic	DN74LS90	860-87
	SGS	74LS90	860-91
	Signetics	**74LS90**	**★1156** 860-95
	TI	SN74LS90	860-99
74LS91	Hitachi	HD74LS91	882-105
	Motorola	**SN74LS91**	**★1128** 882-107
	TI	SN74LS91	882-108 3856-76
74LS92	**Fairchild**	**74LS92**	**★5311** 862-16
	Goldstar	**GD74LS92**	**★1066** 862-17
	Hitachi	HD74LS92	862-18
	Motorola	**SN74LS92**	**★1127** 862-20
	National	DM74LS92	862-22
	Panasonic	DN74LS92	862-23
	SGS	74LS92	862-25
	Signetics	**74LS92**	**★1156** 862-27
	TI	SN74LS92	862-29
74LS93	**Fairchild**	**74LS93**	**★5311** 859-64
	Goldstar	**GD74LS93**	**★1066** 859-65
	Hitachi	HD74LS93	859-67
	Motorola	**SN74LS93**	**★1127** 859-71
	National	DM74LS93	859-75
	Panasonic	DN74LS93	859-77
	SGS	74LS93	859-81
	Signetics	**74LS93**	**★1156** 859-85
	TI	SN74LS93	859-89
74LS95	**Fairchild**	**74LS95B**	**★5311** 881-75 3854-83
	Goldstar	**GD74LS95**	**★1066** 881-76 3854-54
	Hitachi	HD74LS95B	881-77
	Motorola	**SN74LS95B**	**★1128** 881-79 3854-97
	Panasonic	DN74LS95B	881-80
	SGS	74LS95B	881-82
	Signetics	**74LS95B**	**★1156** 881-84 3854-65
	TI	SN74LS95B	881-85 3854-71
74LS96	**Signetics**	**74LS96**	**★1156** 881-160 3855-51
	TI	SN74LS96	881-161 3855-53
74PC00	National	MM74PC00	825-43
74PC02	National	MM74PC02	827-112
74PC04	National	MM74PC04	810-175
74PC08	National	MM74PC08	824-46
74PC138	National	MM74PC138	817-177
74PC74	National	MM74PC74	820-11
74PL839	TI	SN74PL839	4473-66
74PL840	TI	SN74PL840	4473-63
74S00	Fairchild	74S00	871-39
	Goldstar	**GD74S00**	**★1066** 871-40
	National	DM74S00	871-42
	Signetics	**74S00**	**★1156** 871-44
	TI	SN74S00	871-46
74S02	Fairchild	74S02	874-44
	National	DM74S02	874-46
	Signetics	**74S02**	**★1156** 874-48
	TI	SN74S02	874-50
74S03	Fairchild	74S03	871-192
	National	DM74S03	871-194
	Signetics	**74S03**	**★1156** 871-198
	TI	SN74S03	871-200
74S04	Fairchild	74S04	857-129
	Goldstar	**GD74S04**	**★1066** 857-130
	National	DM74S04	857-132
	Signetics	**74S04**	**★1156** 857-134
	TI	SN74S04	857-136
74S05	Fairchild	74S05	857-176
	National	DM74S05	857-178
	Signetics	**74S05**	**★1156** 857-180
	TI	SN74S05	857-182
74S08	Fairchild	74S08	869-124
	Goldstar	**GD74S08**	**★1066** 869-125
	National	DM74S08	869-127
	Signetics	**74S08**	**★1156** 869-129
	TI	SN74S08	869-131
74S09	National	DM74S09	869-154
	TI	SN74S09	869-165
74S10	Fairchild	74S10	870-156
	Goldstar	**GD74S10**	**★1066** 870-157
	National	DM74S10	870-159
	Signetics	**74S10**	**★1156** 870-161
	TI	SN74S10	870-163
74S109	Fairchild	74S109	867-140
74S11	Fairchild	74S11	869-40
	National	DM74S11	869-42
	Signetics	**74S11**	**★1156** 869-44
	TI	SN74S11	869-46
74S112	Fairchild	74S112	868-104
	Goldstar	**GD74S112**	**★1066** 868-105
	National	DM74S112	868-107
	Signetics	**74S112**	**★1156** 868-109
	TI	SN74S112	868-111
74S113	Fairchild	74S113	868-68
	National	DM74S113	868-70
	Signetics	**74S113**	**★1156** 868-72
	TI	SN74S113	868-74
74S114	TI	SN74S114	868-135
74S124	TI	SN74S124	3376-52
74S132	Fairchild	74S132	888-14
	TI	SN74S132	888-16
74S133	Fairchild	74S133	872-65
	National	DM74S133	872-67
	Signetics	**74S133**	**★1157** 872-69
	TI	SN74S133	872-71
74S134	Fairchild	74S134	872-47
	National	DM74S134	872-49
	Signetics	**74S134**	**★1157** 872-51
	TI	SN74S134	872-53
74S135	Fairchild	74S135	874-52
	National	DM74S135	874-54
	Signetics	**74S135**	**★1157** 874-56
	TI	SN74S135	874-58
74S138	AMD	SN74S138	863-129
	Fairchild	74S138	863-131
	Goldstar	**GD74S138**	**★1066** 863-132
	National	DM74S138	863-134
	Signetics	**74S138**	**★1157** 863-136
	TI	SN74S138	863-138
74S139	Fairchild	74S139	863-30
	Goldstar	**GD74S139**	**★1066** 863-31
	National	DM74S139	863-33
	Signetics	**74S139**	**★1157** 863-35
	TI	SN74S139	863-37
74S140	Fairchild	74S140	864-10 2883-29
	National	DM74S140	864-12 2883-30
	Signetics	**74S140**	**★1157** 864-14 2883-34
	TI	SN74S140	864-15 2883-36
74S148	**MMI**	**SN74S148**	**★1103** 888-166
74S15	Fairchild	74S15	869-66
	National	DM74S15	869-68
	TI	SN74S15	869-70
74S151	Fairchild	74S151	880-8
	National	DM74S151	880-12
	Signetics	**74S151**	**★1157** 880-14
	TI	SN74S151	880-16
74S153	Fairchild	74S153	877-154
	National	DM74S153	877-156
	Signetics	**74S153**	**★1157** 877-158
	TI	SN74S153	878-2
74S157	AMD	SN74S157	879-22
	Fairchild	74S157	879-24
	Goldstar	**GD74S157**	**★1066** 879-25
	National	DM74S157	879-27
	Signetics	**74S157**	**★1157** 879-29
	TI	SN74S157	879-31
74S158	Fairchild	74S158	878-108
	National	DM74S158	878-110
	Signetics	**74S158**	**★1157** 878-112
	TI	SN74S158	878-114
74S160	AMD	SN74S160	860-176
74S161	AMD	SN74S161	858-169
74S162	TI	SN74S162	861-28
74S163	AMD	SN74S163	859-20
	Goldstar	**GD74S163**	**★1066** 859-21
	TI	SN74S163	859-23
74S167	Fairchild	74S167	887-73
74S168	**Signetics**	**74S168A**	**★1157** 861-106
	TI	SN74S168	861-110
74S169	**Signetics**	**74S169A**	**★1157** 859-154
	TI	SN74S169	859-156
74S172	**Signetics**	**74S172**	**★1157** 877-32 3830-113
74S174	AMD	SN74S174	866-64
	Fairchild	74S174	866-66
	Goldstar	**GD74S174**	**★1066**
	National	DM74S174	866-68
	Signetics	**74S174**	**★1157** 866-70
	TI	SN74S174	866-72
74S175	AMD	SN74S175	864-296
	Fairchild	74S175	864-298
	National	DM74S175	864-300
	Signetics	74S175	864-302
	TI	SN74S175	864-304
74S181	**Signetics**	**74S181**	**★1157** 855-76
	TI	SN74S181	855-79
74S182	AMD	SN74S182	855-109
	MMI	SN74S182	855-114
	National	DM74S182	855-116 ¶ 379-2
	Signetics	**74S182**	**★1157** 855-118
	TI	SN74S182	855-120
74S188	**Goldstar**	**GD74S188**	**★1066**
	National	DM74S188	3814-33
74S189	AMD	SN74S189	3831-53
	Cypress	CY74S189	3831-41
	Fairchild	74S189	3831-54
	Goldstar	**GD74S189**	**★1066**
	National	DM74S189	877-60 3831-55
		DM74S189A	3831-30
	Signetics	**74S189**	**★4166** 3831-56
	TI	SN74S189B	3831-57
74S194	Fairchild	74S194	881-147 3854-116
	National	DM74S194	881-149
	Signetics	**74S194**	**★1157** 3854-119
	TI	SN74S194	881-150 3854-121
74S195	National	DM74S195	881-58
	Signetics	**74S195**	**★1157** 881-60 3854-120
	TI	SN74S195	881-61 3854-122
74S196	TI	SN74S196	860-132
74S197	TI	SN74S197	858-112
74S20	Fairchild	74S20	870-28
	National	DM74S20	870-30
	Signetics	**74S20**	**★1156** 870-32
	TI	SN74S20	870-34
74S200	National	DM74S200	3832-65
74S206	National	DM74S206	3832-71
74S22	Fairchild	74S22	870-102
	National	DM74S22	870-104
	TI	SN74S22	870-106
74S225	**MMI**	**SN74S225**	**★1114** 3809-14
		SN74S225A	**★1114** 3809-16
	Signetics	**74S225**	**★1157** 877-72
	TI	SN74S225	877-73 3809-15
74S226	TI	SN74S226	888-98 2888-36
74S240	**Goldstar**	**GD74S240**	**★1066** 883-168 2882-49
	MMI	SN74S240	883-169 2882-53
	National	DM74S240	2882-59
	Signetics	**74S240**	**★1157** 883-172
	TI	SN74S240	884-1 2883-4
74S241	MMI	SN74S241	884-54 2882-13
	National	DM74S241	2882-24
	Signetics	**74S241**	**★1157** 884-56
	TI	SN74S241	884-57 2882-40
74S242	**Signetics**	**74S242**	**★1158** 883-90
74S243	**Signetics**	**74S243**	**★1158** 883-91
74S244	MMI	SN74S244	884-95 2882-14
	Signetics	**74S244**	**★1158** 884-97
	TI	SN74S244	2882-41
74S251	AMD	SN74S251	880-62
	Goldstar	**GD74S251**	**★1066** 880-63

(Continued)

Arranged alphanumerically from left to right.

Base Number	Source	Device	Page-Line
74S251	National	DM74S251	880-65
	Signetics	**74S251**	**★1158**
			880-68
	TI	SN74S251	880-70
74S253	AMD	SN74S253	878-59
	Fairchild	74S253	878-61
	National	DM74S253	878-63
	Signetics	**74S253**	**★1158**
			878-65
	TI	SN74S253	878-66
74S257	AMD	SN74S257	879-61
	Fairchild	74S257	879-62
	National	DM74S257	879-64
	Signetics	**74S257**	**★1158**
			879-66
	TI	SN74S257	879-68
74S258	AMD	SN74S258	878-148
	Fairchild	74S258	878-150
	National	DM74S258	878-152
	Signetics	**74S258**	**★1158**
			878-154
	TI	SN74S258	878-156
74S260	Fairchild	74S260	865-28
	National	DM74S260	865-29
	Signetics	**74S260**	**★1158**
			865-31
	TI	SN74S260	865-33
74S268	TI	SN74S268	875-124
74S273	**Signetics**	**74S273**	**★1158**
			866-164
74S274	TI	SN74S274	855-135
74S280	**Goldstar**	**GD74S280**	**★1066**
			889-34
	National	DM74S280	889-36
	Signetics	**74S280**	**★1158**
			889-38
	TI	SN74S280	889-41
74S281	National	DM74S281	855-170
	TI	SN74S281	855-172
74S283	TI	SN74S283	856-67
74S287	National	DM74S287	3814-107
			¶ 437-1
74S288	**Goldstar**	**GD74S288**	**★1066**
	National	DM74S288	3814-37
74S289	AMD	SN74S289	3831-46
	Fairchild	74S289	3831-47
	National	DM74S289	877-48
			3831-48
	TI	SN74S289B	3831-51
74S299	**Goldstar**	**GD74S299**	**★1066**
			882-150
			3855-96
	National	DM74S299	882-152
	TI	SN74S299	882-153
			3855-97
74S30	Fairchild	74S30	872-41
	National	DM74S30	872-43
	TI	SN74S30	872-45
74S301	**Signetics**	**74S301**	**★4166**
			3832-63
	TI	SN74S301	3832-74
74S310	MMI	SN74S310	884-104
74S32	Fairchild	74S32	873-67
	Goldstar	**GD74S32**	**★1066**
			873-68
	National	DM74S32	873-70
	Signetics	**74S32**	**★1156**
			873-72
	TI	SN74S32	873-74
74S330	TI	SN74S330	4474-49
74S331	TI	SN74S331	4474-48
74S340	MMI	SN74S340	884-105
74S348	**MMI**	**SN74S348**	**★1103**
			888-173
74S350	AMD	SN74S350	843-118
	Signetics	**74S350**	**★1158**
			843-128
	TI	SN74S350	843-130
74S37	**Signetics**	**74S37**	**★1156**
			871-79
	TI	SN74S37	871-81
74S370	TI	SN74S370	3849-4
74S373	AMD	SN74S373	876-32
	National	DM74S373	876-35
	Signetics	**74S373**	**★1158**
			(Continued)
74S373	Signetics	74S373	876-37
	TI	SN74S373	876-39
74S374	AMD	SN74S374	867-26
	Goldstar	**GD74S374**	**★1066**
	MMI	SN74S374	867-28
	National	DM74S374	867-31
	Signetics	**74S374**	**★1158**
			867-33
	TI	SN74S374	867-35
74S378	AMD	SN74S378	866-97
74S379	AMD	SN74S379	864-342
74S38	**Signetics**	**74S38**	**★1156**
			871-117
	TI	SN74S38	871-119
74S381	**MMI**	**SN74S381**	**★1103**
			855-74
	TI	SN74S381	855-80
74S382	**MMI**	**SN74S382**	**★1103**
			855-115
74S387	National	DM74S387	3814-104
74S388	AMD	SN74S388	864-318
74S399	AMD	SN74S399	879-126
74S40	Fairchild	74S40	870-72
	National	DM74S40	870-74
	Signetics	**74S40**	**★1156**
			870-76
	TI	SN74S40	870-78
74S408	**MMI**	**SN74S408**	**★1104**
			2892-85
		SN74S408-2	**★1104**
			2892-86
		SN74S408-3	**★1104**
			2892-87
74S409	**MMI**	**SN74S409**	**★1104**
			2892-92
		SN74S409-2	**★1104**
			2892-93
		SN74S409-3	**★1104**
			2892-94
74S412	TI	SN74S412	875-155
			1457-182
74S428	TI	SN74S428	1457-193
74S436	TI	SN74S436	864-119
			2893-15
74S437	TI	SN74S437	864-120
			2893-16
74S472	National	DM74S472	3816-35
		DM74S472A	3816-10
		DM74S472B	3815-97
			3816-11
74S473	National	DM74S473	3816-25
		DM74S473A	3816-2
74S474	National	DM74S474	3816-51
		DM74S474A	3816-16
74S475	National	DM74S475	3816-47
		DM74S475A	3816-4
74S481	TI	SN74S481	1411-21
74S482	TI	SN74S482	887-56
			1449-105
74S484	TI	SN74S484A	3808-31
74S485	TI	SN74S485A	3808-28
74S508	**MMI**	**SN74S508**	**★1103**
			855-121
74S51	Fairchild	74S51	872-107
	Goldstar	**GD74S51**	**★1066**
			872-108
	National	DM74S51	872-110
	Signetics	**74S51**	**★1156**
			872-112
	TI	SN74S51	872-114
74S516	**MMI**	**SN74S516**	**★1103**
			855-125
74S532	MMI	SN74S532	867-29
74S533	AMD	SN74S533	876-78
74S534	AMD	SN74S534	866-134
	MMI	SN74S534	866-136
	Signetics	74S534	866-139
74S535	MMI	SN74S535	876-80
74S536	MMI	SN74S536	866-137
74S556	**MMI**	**SN74S556**	**★1103**
			★1119
			843-73
74S557	**MMI**	**SN74S557**	**★1103**
			843-35
74S558	**MMI**	**SN74S558**	**★1103**
			843-36
74S570	National	DM74S570	3815-48
		DM74S570A	3815-49
74S571	National	DM74S571	3815-52
		DM74S571A	3815-53
		DM74S571B	3815-54
74S572	National	DM74S572	3817-26
		DM74S572A	3817-1
74S573	National	DM74S573	3817-29
		DM74S573A	3817-6
		DM74S573B	3816-95
74S64	Fairchild	74S64	873-8
	National	DM74S64	873-10
	Signetics	**74S64**	**★1156**
			873-12
	TI	SN74S64	873-14
74S65	Fairchild	74S65	873-16
	National	DM74S65	873-18
	TI	SN74S65	873-21
74S700	**MMI**	**SN74S700**	**★1104**
			2893-32
74S730	**MMI**	**SN74S730**	**★1104**
			2893-33
74S731	**MMI**	**SN74S731**	**★1104**
			2893-34
74S734	**MMI**	**SN74S734**	**★1104**
			2893-35
74S74	Fairchild	74S74	864-252
	Goldstar	**GD74S74**	**★1066**
			864-253
	National	DM74S74	864-254
	Signetics	**74S74**	**★1156**
			864-256
	TI	SN74S74	864-258
74S818	MMI	SN74S818	876-140
			881-10
74S85	**Goldstar**	**GD74S85**	**★1066**
			854-75
	Signetics	**74S85**	**★1156**
			854-77
	TI	SN74S85	854-79
74S86	Fairchild	74S86	874-139
	Goldstar	**GD74S86**	**★1066**
	National	DM74S86	874-140
	Signetics	**74S86**	**★1156**
			874-142
	TI	SN74S86	874-144
74SC137			
	GTEMicro	G74SC137	818-150
	Plessey	MV74SC137	818-151
	Supertex	74SC137	818-153
74SC138			
	GTEMicro	G74SC138	818-76
	SPI	SP74SC138	818-77
	Supertex	74SC138	818-78
74SC139			
	GTEMicro	G74SC139	817-160
	SPI	SP74SC139	817-162
	Supertex	74SC139	817-163
74SC237			
	Plessey	MV74SC237	818-152
	Supertex	74SC237	818-154
74SC238			
	Supertex	74SC238	818-79
74SC239			
	Plessey	MV74SC239	817-161
	Supertex	74SC239	817-164
74SC240			
	GTEMicro	G74SC240	839-133
	SPI	SP74SC240	839-134
	Supertex	74SC240	839-135
74SC241			
	GTEMicro	G74SC241	840-38
	SPI	SP74SC241	840-40
	Supertex	74SC241	840-42
74SC242			
	Supertex	74SC242	838-116
74SC243			
	Supertex	74SC243	838-136
74SC244			
	GTEMicro	G74SC244	840-39
	SPI	SP74SC244	840-41
	Supertex	74SC244	840-43
74SC245			
	GTEMicro	G74SC245	841-184
			2890-57
	SPI	SP74SC245	841-185
	Supertex	74SC245	841-186
74SC273			
	Supertex	74SC273	821-94
74SC373			
	GTEMicro	G74SC373	830-19
	SPI	SP74SC373	830-21
	Supertex	74SC373	830-23
74SC374			
	GTEMicro	G74SC374	822-151
	Plessey	MV74SC374	822-152
	SPI	SP74SC374	822-154
	Supertex	74SC374	822-156
74SC393			
	Supertex	74SC393	812-154
74SC533			
	Plessey	MV74SC533	830-129
	Supertex	74SC533	830-131
74SC534			
	SPI	SP74SC534	822-29
	Supertex	74SC534	822-30
74SC540			
	SPI	SP74SC540	810-133
	Supertex	74SC540	810-135
74SC541			
	SPI	SP74SC541	810-134
	Supertex	74SC541	810-136
74SC563			
	Plessey	MV74SC563	830-130
	Supertex	74SC563	830-132
74SC564			
	Supertex	74SC564	822-31
74SC573			
	Plessey	MV74SC573	830-20
	SPI	SP74SC573	830-22
	Supertex	74SC573	830-24
74SC574			
	Plessey	MV74SC574	822-153
	SPI	SP74SC574	822-155
	Supertex	74SC574	822-157
74SC670			
	SPI	SP74SC670	831-75
74THCT1010			
	TI	SN74THCT1010-100	
			808-18
		SN74THCT1010-140	
			808-19
74THCT4501			
	TI	SN74THCT4501	3829-36
74THCT4502			
	TI	SN74THCT4502	2892-76
74THCT9510			
	TI	SN74THCT9510	808-20
74THCT9520			
	TI	SN74THCT9520	837-131
74THCT9521			
	TI	SN74THCT9521	837-132
75	Amperex	BGY75	3324-73
	Burr-Brown	**PCM75**	**★3147**
			3316-128
			¶ 389-2
		PCM75J	**★3147**
			2847-21
		PCM75K	**★3147**
			2847-8
	Intel	**PCB75**	**★4072**
			2046-43
	NEC	μCOM-75	1450-106
750	Cybernetic	CY750	1465-50
	Plessey	TBA750	3322-12
			3326-46
	Signetics	TBA750C	3322-38
			3326-64
7500	AD	AD7500	
		Series	¶ 388-2
	NEC	μPD7500	1409-17
	OKI	MSM7500	4453-24
	Sanyo	LC7500	3316-115
	TI	TMS7500	1470-94
			1431-14
75000	Cadnetix	CDX-75000	4978-2
		CDX75000	**★5102**
	OKI	**MSM75000**	**★4733**
7501	AD	AD7501	¶ 401-9
		AD7501J	**★3145**
			2830-146
		AD7501K	**★3145**
			2830-147
			(Continued)

¶ Indicates page number in Application Note Directory.
★ Indicates additional data is provided on the page noted.

Base Number	Source	Device	Page-Line
7501	**AD**	**AD7501S**	**★3145**
			2830-148
	MicroPwr	**MP7501J**	**★3207**
			2830-157
		MP7501K	**★3207**
			2830-158
		MP7501S	**★3207**
			2830-103
	NEC	µPD7501	1450-95
			1409-18
7502	**AD**	**AD7502J**	**★3145**
			2830-42
		AD7502K	**★3145**
			2830-43
		AD7502S	**★3145**
			2830-44
	MicroPwr	**MP7502J**	**★3207**
			2830-50
		MP7502K	**★3207**
			2830-51
		MP7502S	**★3207**
			2829-34
	NEC	µPD7502	1450-96
			1409-19
	Toshiba	TA7502	3353-31
		TA7502A	3353-32
		TA7502B	3345-7
	Ziatech	ZT 7502/10/40/or 60	2040-71
7503	AD	AD7503	¶ 401-9
		AD7503J	**★3145**
			2830-149
		AD7503K	**★3145**
			2830-150
		AD7503S	**★3145**
			2830-151
	MicroPwr	**MP7503J**	**★3207**
			2830-159
		MP7503K	**★3207**
			2830-160
		MP7503S	**★3207**
			2830-104
	NEC	µPD7503	1450-97
			1409-20
7504	Burr-Brown	MP7504	2034-6
	Toshiba	TA7504	3330-31
7506	AD	AD7506	¶ 401-9
		AD7506J	**★3145**
			2831-80
		AD7506K	**★3145**
			2831-81
		AD7506S	**★3145**
			2831-72
		AD7506T	**★3145**
			2831-73
	MicroPwr	**MP7506J**	**★3207**
			2831-70
		MP7506K	**★3207**
			2831-71
		MP7506S	**★3207**
			2831-54
	NEC	µPD7506	1450-86
			1409-21
	Toshiba	TA7506	3330-20
75064	TI	SN75064	2897-148
75065	TI	SN75065	2898-43
75066	TI	SN75066	2897-149
75067	TI	SN75067	2898-44
75068	TI	SN75068	2897-150
75069	TI	SN75069	2898-45
7507	AD	AD7507	¶ 401-9
		AD7507J	**★3145**
			2831-18
		AD7507K	**★3145**
			2831-19
		AD7507S	**★3145**
			2831-8
		AD7507T	**★3145**
			2831-9
	MicroPwr	**MP7507J**	**★3207**
			2831-6
		MP7507K	**★3207**
			2831-7
		MP7507S	**★3207**
			2830-200
			(Continued)
7507	NEC	µPD7507	1450-87
			1409-22
		µPD7507S	1450-88
			1409-23
	Signetics	**PNA7507**	**★3688**
			★3725
			2833-11
	WinSystems	MCM-7507	2040-42
			2040-63
7508	**MicroPwr**	**MP7508K**	**★3207**
			2830-161
		MP7508S	**★3207**
			2830-105
	NEC	µPD7508	1450-89
			1409-24
		µPD7508A	1450-90
			1450-100
			1409-25
		µPD7508H	1450-91
7509	**MicroPwr**	**MP7509K**	**★3207**
			2830-52
		MP7509S	**★3207**
			2829-35
751	AD	AD7510DI	¶ 403-3
	NEC	µPC751	2892-29
	SGS	M751	3382-91
7510	AD	AD7510	¶ 401-9
		AD7510DIJ	**★3144**
			2823-68
		AD7510DIK	**★3144**
			2823-69
		AD7510DIS	**★3144**
			2823-70
	Cubit	7510	2017-26
	MicroPwr	**MP7510DIJ**	**★3207**
			2823-78
		MP7510DIK	**★3207**
			2823-79
		MP7510DIS	**★3207**
			2823-80
	PMI	SW-7510A	2824-82
		SW-7510B	2824-83
		SW-7510E	2824-84
		SW-7510F	2824-85
	Sanyo	LC7510	3324-5
	ThomsonCSF	EFB7510	3379-120
75107	Fairchild	75107A	2886-19
		75107B	2886-34
	Motorola	**MC75107**	**★3211**
			2886-21
			¶ 394-13
			¶ 398-11
	National	DS75107	2886-23
			2886-36
	TI	SN75107A	2886-25
		SN75107B	2886-38
75108	Fairchild	75108B	2886-39
	Motorola	**MC75108**	**★3211**
			2886-27
	National	DS75108	2886-29
			2886-41
	TI	SN75108A	2886-31
		SN75108B	2886-43
75109	TI	SN75109A	2883-48
7511	AD	AD7511	¶ 401-9
		AD7511DIJ	**★3144**
			2823-71
		AD7511DIK	**★3144**
			2823-72
		AD7511DIS	**★3144**
			2823-73
		AD7511DIT	**★3144**
			2823-74
	MicroPwr	**MP7511DIJ**	**★3207**
			2823-81
		MP7511DIK	**★3207**
			2823-82
		MP7511DIS	**★3207**
			2823-83
		MP7511DIT	**★3207**
			2823-84
	PMI	SW-7511A	2824-86
		SW-7511B	2824-87
		SW-7511E	2824-88
		SW-7511F	2824-89
	ThomsonCSF	EFB7511	3379-121
75110	Fairchild	75110A	2883-49
	Motorola	MC75110	¶ 398-11
	TI	SN75110A	2883-52
75112	TI	SN75112	2883-53
75113	National	DS75113	2883-42
	TI	SN75113	2883-44
75114	National	DS75114	2883-24
	TI	SN75114	2883-26
75115	National	DS75115	2886-59
	TI	SN75115	2887-2
75116	TI	SN75116	2891-30
75117	TI	SN75117	2891-36
75118	TI	SN75118	2891-32
75119	TI	SN75119	2891-34
7512	**AD**	**AD7512DIJ**	**★3144**
			2825-100
		AD7512DIK	**★3144**
			2825-101
		AD7512DIS	**★3144**
			2825-102
		AD7512DIT	**★3144**
			2825-103
	MicroPwr	**MP7512DIJ**	**★3207**
			2825-104
		MP7512DIK	**★3207**
			2825-105
		MP7512DIS	**★3207**
			2825-106
		MP7512DIT	**★3207**
			2825-107
	Sanyo	LC7512	3324-6
	ThomsonCSF	EFB7512	3379-122
75121	National	DS75121	2881-5
	TI	SN75121	2881-9
75122	National	DS75122	2885-14
	TI	SN75122	2885-16
75123	National	DS75123	2881-1
	TI	SN75123	2881-3
75124	National	DS75124	2885-10
	TI	SN75124	2885-12
75125	**Motorola**	**MC75125**	**★3211**
			2885-57
	National	DS75125	2885-59
	TI	SN75125	2886-1
75126	TI	SN75126	2881-33
75127	**Motorola**	**MC75127**	**★3211**
			2885-58
	National	DS75127	2885-60
	TI	SN75127	2886-2
75128	**Motorola**	**MC75128**	**★3211**
			2886-5
	National	DS75128	2886-7
	TI	SN75128	2886-9
75129	**Motorola**	**MC75129**	**★3211**
			2886-6
	National	DS75129	2886-8
	TI	SN75129	2886-10
7513	AD	AD7513	¶ 401-9
75130	TI	SN75130	2881-34
75136	TI	SN75136	888-67
			2889-1
75138	TI	SN75138	2889-47
7514	NEC	µPD7514	1450-98
75140	TI	SN75140A	2885-4
75141	TI	SN75141	2885-5
75142	TI	SN75142A	2885-2
75143	TI	SN75143A	2885-3
7515	ThomsonCSF	EFG7515	3380-21
75150	Fairchild	75150	2881-16
	National	DS75150	2881-17
	TI	SN75150	2881-18
75151	TI	SN75151	2884-23
75152	TI	SN75152	2887-12
75153	TI	SN75153	2884-24
75154	Fairchild	75154	2885-49
	National	DS75154	2885-50
	TI	SN75154	2885-51
75157	TI	SN75157	2886-52
75158	TI	SN75158	2883-27
75159	TI	SN75159	2883-46
7516	AD	AD7516	¶ 401-9
75160	National	DS75160A	2889-49
	TI	SN75160B	2891-11
75161	National	DS75161A	2889-50
	TI	SN75161B	2891-12
75162	National	DS75162A	2889-51
	TI	SN75162B	2891-13
75163	TI	SN75163B	2891-14
7517	NEC	µPD7517	1450-92
			1450-101
75172	Intech	SN75172	¶ 396-7
	Motorola	**SN75172**	**★3211**
			★3212
			2884-25
	TI	SN75172	2884-27
75173	Intech	SN75173	¶ 396-7
	Motorola	**SN75173**	**★3211**
			★3212
			2887-39
	TI	SN75173	2887-42
75174	Intech	SN75174	¶ 396-7
	Motorola	**SN75174**	**★3211**
			★3212
			2884-26
	TI	SN75174	2884-28
75175	Intech	SN75175	¶ 396-7
	Motorola	**SN75175**	**★3211**
			★3212
			2887-40
	TI	SN75175	2887-43
75176	Motorola	SN75176	2891-22
	TI	SN75176B	2891-25
75177	Motorola	SN75177	2891-23
	TI	SN75177B	2891-26
75178	Motorola	SN75178	2891-24
	TI	SN75178B	2891-27
75179	TI	SN75179B	2891-28
7518	**Signetics**	**PNA7518**	**★3690**
			★3725
			2837-45
75182	TI	SN75182	2887-6
75183	TI	SN75183	2883-37
75188	Goldstar	GD75188	2881-42
	TI	SN75188	2881-49
75189	Goldstar	GD75189A	2885-40
	TI	SN75189	2885-26
		SN75189A	2885-41
7519	AD	AD7519	¶ 401-9
	NEC	µPD7519	1450-102
			1409-26
752	NEC	µPC752	2892-30
7520	AD	AD7520	¶ 388-3
			¶ 393-11
		AD7520J	2859-17
		AD7520K	2858-31
		AD7520L	2860-14
		AD7520S	2859-18
		AD7520T	2858-32
		AD7520U	2860-15
	Cubit	7520	2017-27
	Intersil	**AD7520J**	**★3200**
			2859-20
		AD7520K	**★3200**
			2858-34
		AD7520L	**★3200**
			2860-17
		AD7520S	**★3200**
			2859-21
		AD7520T	**★3200**
			2858-35
		AD7520U	**★3200**
			2860-18
	MicroPwr	**MP7520J**	**★ 688**
			★3206
			2859-23
		MP7520K	**★ 688**
			★3206
			2858-37
		MP7520L	**★ 688**
			★3206
			2857-2
		MP7520Q	**★ 688**
			★3206
			2858-29
		MP7520R	**★ 688**
			★3206
			2858-14
		MP7520S	**★ 688**
			★3206
			2859-24
		MP7520T	**★ 688**
			(Continued)

Arranged alphanumerically from left to right.

PART NUMBER INDEX

Base Number	Source	Device	Page-Line
7520	**MicroPwr**	**MP7520T**	★3206
			2858-38
		MP7520U	★ 688
			★3206
			2857-3
		MP7520W	★ 688
			★3206
			2858-30
		MP7520Y	★ 688
			★3206
			2858-15
	National	AD7520J	2859-44
		AD7520K	2859-11
		AD7520L	2857-48
		AD7520S	2859-45
		AD7520T	2859-12
		AD7520U	2857-49
	NEC	µPD7520	1450-99
			1409-27
75207	National	DS75207	2886-12
			2899-14
	TI	SN75207	2886-14
			2899-16
		SN75207B	2886-17
75208	National	DS75208	2886-13
			2899-15
	TI	SN75208	2886-15
			2899-17
		SN75208B	2886-18
7521	AD	AD7521	¶ 388-3
			¶ 393-11
		AD7521J	2869-23
		AD7521K	2869-10
		AD7521L	2868-27
		AD7521S	2869-24
		AD7521T	2869-11
		AD7521U	2868-28
	Intersil	**AD7521J**	★3200
			2869-26
		AD7521K	★3200
			2869-13
		AD7521L	★3200
			2868-29
		AD7521S	★3200
			2869-27
		AD7521T	★3200
			2869-14
		AD7521U	★3200
			2868-30
	MicroPwr	**MP7521J**	★ 688
			★3206
			2869-29
		MP7521K	★ 688
			★3206
			2869-16
		MP7521L	★ 688
			★3206
			2868-32
		MP7521S	★ 688
			★3206
			2869-30
		MP7521T	★ 688
			★3206
			2869-17
		MP7521U	★ 688
			★3206
			2868-33
	National	AD7521J	2869-32
		AD7521K	2869-19
		AD7521L	2869-6
		AD7521S	2869-33
		AD7521T	2869-20
		AD7521U	2869-7
7522	AD	AD7522	¶ 388-3
			¶ 393-11
		AD7522J	2859-32
		AD7522K	2858-45
		AD7522L	2857-11
		AD7522S	2859-33
		AD7522T	2858-46
		AD7522U	2857-12
	MicroPwr	**MP7522J**	★ 688
			★3206
			2859-25
		MP7522K	★ 688
			★3206
			(Continued)
7522	MicroPwr	MP7522K	2858-39
		MP7522L	★ 688
			★3206
			2857-5
		MP7522S	★ 688
			★3206
			2859-26
		MP7522T	★ 688
			★3206
			2858-47
		MP7522U	★ 688
			★3206
			2857-6
7523	AD	AD7523	¶ 388-3
		AD7523J	2852-18
		AD7523K	2851-12
		AD7523L	2850-22
		AD7523S	2852-19
		AS7523	¶ 393-11
	Datel	**DAC-7523**	★3162
			2852-40
	Intersil	**AD7523J**	★3200
			2850-28
		AD7523K	★3200
			2851-13
		AD7523L	★3200
			2850-23
		AD7523S	★3200
			2850-29
		AD7523T	★3200
			2851-14
		AD7523U	★3200
			2850-24
	MicroPwr	**MP7523J**	★ 688
			★3206
			2852-17
		MP7523K	★ 688
			★3206
			2851-11
		MP7523L	★ 688
			★3206
			2850-21
75234	TI	SN75234	2899-8
75239	Fairchild	75239	2899-9
7524	AD	AD7524	¶ 388-3
			¶ 393-10
			¶ 393-11
		AD7524A	2852-30
		AD7524B	2851-20
		AD7524C	2850-25
		AD7524J	2852-31
		AD7524K	2851-21
		AD7524L	2850-26
		AD7524S	2852-32
		AD7524T	2851-22
		AD7524U	2850-27
	MicroPwr	**MP7524A**	★ 688
			★3206
			2852-1
		MP7524B	★ 688
			★3206
			2851-15
		MP7524C	★ 688
			★3206
			2850-35
		MP7524J	★ 688
			★3206
			2852-2
		MP7524K	★ 688
			★3206
			2851-18
		MP7524L	★ 688
			★3206
			2850-19
		MP7524S	★ 688
			★3206
			2852-3
		MP7524T	★ 688
			★3206
			2851-19
		MP7524U	★ 688
			★3206
			2850-20
	PMI	**PM7524**	★3637
			2850-30
7525	AD	AD7525	¶ 393-11
		AD7525K	3398-69
			3401-82
		AD7525L	3401-83
		AD7525T	3398-70
			3401-84
		AD7525U	3401-85
75261	TI	SN75261	¶ 439-5
7527	AD	AD7527	¶ 390-5
			¶ 390-6
	NEC	µPD7527	1450-107
75270	TI	SN75270	886-147
7528	AD	AD7528	¶ 388-1
			¶ 393-10
		AD7528A	★3110
			2855-17
		AD7528B	★3110
			2855-14
		AD7528C	★3110
			2855-15
		AD7528J	★3110
			2855-18
		AD7528K	★3110
			2855-16
		AD7528L	★3110
			2855-11
		AD7528S	★3110
			2855-19
		AD7528T	★3110
			2855-12
		AD7528U	★3110
			2855-13
	MicroPwr	**MP7528XA**	★ 688
			★3206
			2854-25
		MP7528XB	★ 688
			★3206
			2851-46
		MP7528XC	★ 688
			★3206
			2850-41
		MP7528XJ	★ 688
			★3206
			2854-26
		MP7528XK	★ 688
			★3206
			2851-47
		MP7528XL	★ 688
			★3206
			2850-42
		MP7528XQ	★ 688
			★3206
			2850-18
		MP7528XS	★ 688
			★3206
			2854-27
		MP7528XT	★ 688
			★3206
			2851-48
		MP7528XU	★ 688
			★3206
			2850-43
	NEC	µPD7528	1450-93
			1450-103
	PMI	**PM7528**	★3637
			2850-31
7530	AD	AD7530	¶ 388-3
			¶ 393-11
		AD7530J	2859-19
		AD7530K	2858-33
		AD7530L	2860-16
	Cubit	7530	2017-28
	Intersil	**AD7530J**	★3200
			2859-22
		AD7530K	★3200
			2858-36
		AD7530L	★3200
			2857-1
	MicroPwr	**MP7530**	★ 688
			★3206
			2857-4
		MP7530J	★ 688
			★3206
			2859-27
		MP7530K	★ 688
			(Continued)
7530	**MicroPwr**	**MP7530K**	★3206
			2858-40
7531	AD	AD7531	¶ 388-3
			¶ 393-11
		AD7531J	2869-25
		AD7531K	2869-12
	Intersil	**AD7531J**	★3200
			2869-28
		AD7531K	★3200
			2869-15
		AD7531L	★3200
			2868-31
	MicroPwr	**MP7531J**	★ 688
			★3206
			2869-31
		MP7531K	★ 688
			★3206
			2869-18
		MP7531L	★ 688
			★3206
			2868-34
75325	National	DS75325	2892-40
	SiliconG	SG75325	2892-41
	TI	SN75325	2892-43
75326	SiliconG	SG75326	2892-44
	TI	SN75326	2892-48
75327	SiliconG	SG75327	2892-45
	TI	SN75327	2892-49
7533	AD	AD7533	¶ 388-3
			¶ 393-10
			¶ 393-11
		AD7533A	2859-34
		AD7533B	2859-1
		AD7533C	2857-13
		AD7533J	2859-35
		AD7533K	2859-2
		AD7533L	2857-14
		AD7533S	2859-36
		AD7533T	2859-3
		AD7533U	2857-15
	Datel	**DAC-7533**	★3162
			2858-17
	Intersil	**AD7533J**	★3200
			2859-37
		AD7533K	★3200
			2859-5
		AD7533L	★3200
			2857-18
		AD7533S	★3200
			2859-38
		AD7533T	★3200
			2859-6
		AD7533U	★3200
			2857-19
	MicroPwr	**MP7533K**	★ 688
			★3206
			2859-4
		MP7533L	★ 688
			★3206
			2857-16
		MP7533Q	★ 688
			★3206
			2856-27
		MP7533R	★ 688
			★3206
			2856-17
		MP7533S	★ 688
			★3206
			2859-39
		MP7533T	★ 688
			★3206
			2859-40
			2859-41
		MP7533U	★ 688
			★3206
			2857-17
		MP7533W	★ 688
			★3206
			2856-28
		MP7533Y	★ 688
			★3206
			2856-18
	PMI	**PM7533**	★3637
			2858-21
7534	**AD**	**AD7534A**	★3114
			2871-1
			(Continued)

¶ Indicates page number in Application Note Directory.
★ Indicates additional data is provided on the page noted.

Base Number	Source	Device	Page-Line
7534	**AD**	**AD7534B**	★3114
			2870-42
		AD7534J	★3114
			2871-2
		AD7534K	★3114
			2870-43
		AD7534S	★3114
			2871-3
		AD7534T	★3114
			2870-44
7535	**AD**	**AD7535A**	★3114
			2871-4
		AD7535B	★3114
			2870-45
		AD7535J	★3114
			2871-5
		AD7535K	★3114
			2870-46
		AD7535S	★3114
			2871-6
		AD7535T	★3114
			2870-47
75350	TI	SN75350	2892-125
75358	Motorola	MC75358	847-132
			2892-109
7536	**AD**	**AD7536J**	★3114
			2871-7
		AD7536K	★3114
			2870-48
		AD7536S	★3114
			2871-8
		AD7536T	★3114
			2870-49
75361	National	DS75361	2892-122
	TI	SN75361A	2892-126
75362	National	DS75362	2892-123
75363	TI	SN75363	2892-106
75365	National	DS75365	2892-138
	TI	SN75365	2892-142
			¶ 439-5
75367	TI	SN75367	886-141
			2893-7
75369	TI	SN75369	2892-120
7537	NEC	µPD7537	1450-104
7538	NEC	µPD7538	1450-94
			1450-105
754	NEC	µPC754	3306-60
7540	Cubit	7540	2017-29
75407	TI	SN75407	2897-49
			2897-81
75408	TI	SN75408	2897-111
7541	AD	AD7541	¶ 393-11
		AD7541A	2866-29
		AD7541B	2863-18
		AD7541J	2866-30
		AD7541K	2863-19
		AD7541S	2867-1
		AD7541T	2863-20
	Datel	**DAC-7541**	★3162
			2863-41
	Harris	**HI7541A**	★3193
			2863-37
		HI7541B	★3193
			2861-8
		HI7541J	★3193
			2863-38
		HI7541K	★3193
			2861-9
		HI7541S	★3193
			2863-39
		HI7541S-8	★3193
			2863-40
		HI7541T	★3193
			2861-10
		HI7541T-8	★3193
			2861-11
	HybridSys	HS7541-4	2863-36
		HS7541B-1	2866-39
		HS7541B-2	2863-28
		HS7541C-1	2866-40
		HS7541C-2	2863-29
	Intersil	AD7541A	2866-31
		AD7541B	2863-21
		AD7541J	2866-32
		AD7541K	2863-22
		AD7541L	2867-2
			(Continued)
7541	Intersil	AD7541S	2867-3
		AD7541T	2863-23
	MicroPwr	**MP7541A**	★ 688
			★3206
			2866-26
		MP7541B	★ 688
			★3206
			2863-16
		MP7541J	★ 688
			★3206
			2866-27
		MP7541K	★ 688
			★3206
			2863-17
		MP7541S	★ 688
			★3206
			2866-28
		MP7541T	★ 688
			★3206
			2863-15
	PMI	**PM7541A**	★3637
			2863-33
		PM7541B	★3637
			2866-44
		PM7541E	★3637
			2863-34
		PM7541F	★3637
			2866-45
		PM7541G	★3637
			2863-35
		PM7541H	★3637
			2866-46
	TeledyneP	TP7541A	2867-5
		TP7541B	2863-44
		TP7541J	2867-6
		TP7541K	2863-45
		TP7541S	2867-7
		TP7541T	2863-46
75415	TeledyneP	TDP75415	2867-4
7542	AD	AD7542	¶ 390-5
			¶ 390-6
			¶ 392-8
			¶ 395-15
		AD7542A	2867-24
		AD7542B	2864-22
		AD7542J	2867-25
		AD7542K	2864-23
		AD7542S	2867-26
		AD7542T	2864-24
	Harris	MP7542S	2867-31
	MicroPwr	**MP7542A**	★ 688
			★3206
			2867-9
		MP7542B	★ 688
			★3206
			2868-2
		MP7542J	★ 688
			★3206
			2867-10
		MP7542K	★ 688
			★3206
			2868-3
		MP7542T	★ 688
			★3206
			2868-4
	National	DM7542	864-305
75426	TI	SN75426B	2876-36
75427	TI	SN75427B	2876-37
7543	AD	AD7543A	2867-27
		AD7543B	2864-25
		AD7543J	2867-28
		AD7543K	2864-26
	MicroPwr	**MP7543A**	★ 688
			★3206
			2867-11
		MP7543B	★ 688
			★3206
			2868-5
		MP7543J	★ 688
			★3206
			2867-12
		MP7543K	★ 688
			★3206
			2868-6
		MP7543S	★ 688
			★3206
			(Continued)
7543	MicroPwr	MP7543S	2867-13
		MP7543T	★ 688
			★3206
			2868-7
75430	TI	SN75430	2892-107
75431	TI	SN75431	2892-108
75432	TI	SN75432	2897-50
75433	TI	SN75433	2897-112
75434	TI	SN75434	2897-82
75435	TI	SN75435	2898-64
75436	TI	SN75436	2898-54
75437	TI	SN75437A	2898-55
75438	TI	SN75438	2898-56
7544	AD	AD7544	¶ 391-3
	National	DM7544	886-153
75440	TI	SN75440	2898-57
75441	TI	SN75441	2896-112
			2897-118
75446	TI	SN75446	2897-19
75447	TI	SN75447	2897-51
75448	TI	SN75448	2897-113
75449	TI	SN75449	2897-83
7545	AD	AD7545	¶ 388-1
			¶ 393-10
		AD7545A	★3112
			2868-13
		AD7545B	★3112
			2866-21
		AD7545C	★3112
			2861-24
		AD7545GC	★3112
			2861-25
		AD7545GL	★3112
			2861-26
		AD7545GU	★3112
			2861-27
		AD7545J	★3112
			2868-14
		AD7545K	★3112
			2866-22
		AD7545L	★3112
			2861-28
		AD7545S	★3112
			2868-15
		AD7545T	★3112
			2866-23
		AD7545U	★3112
			2861-29
	MicroPwr	**MP7545**	★ 688
			★3206
			2864-2
	PMI	**PM7545**	★3637
			2864-21
75450	Fairchild	75450B	2896-117
	National	DS75450	2896-125
	SiliconG	SG75450	2896-135
		SG75450B	2896-136
	TI	SN75450B	2897-9
75451	Fairchild	75451A	2896-118
		75451B	2896-119
	National	DS75451	2896-126
	SiliconG	SG75451	2897-1
	TI	SN75451B	2897-10
75452	Fairchild	75452A	2897-34
		75452B	2897-35
	Motorola	MC75452	¶ 414-1
	National	DS75452	2897-40
			¶ 396-12
	SiliconG	SG75452	2897-44
	TI	SN75452B	2897-52
75453	Fairchild	75453A/B	2897-98
	Motorola	MC75453	2897-99
	National	DS75453	2897-102
	SiliconG	SG75453	2897-106
	TI	SN75453B	2897-114
75454	National	DS75454	2897-72
	SiliconG	SG75454	2897-76
	TI	SN75454B	2897-84
75458	Toshiba	TA75458	3366-25
7546	AD	AD7546A	2871-39
		AD7546B	2871-29
		AD7546J	2871-40
		AD7546K	2871-30
	National	DM7546	3855-75
75460	SiliconG	SG75460	2897-2
		SG75460B	2897-3
	TI	SN75460	2897-11
75461	Fairchild	75461	2896-120
	National	DS75461	2896-127
	SiliconG	SG75461	2897-4
	TI	SN75461	2897-12
75462	Fairchild	75462	2897-36
	National	DS75462	2897-41
	SiliconG	SG75462	2897-45
	TI	SN75462	2897-53
75463	National	DS75463	2897-103
	SiliconG	SG75463	2897-107
	TI	SN75463	2897-115
75464	National	DS75464	2897-73
	SiliconG	SG75464	2897-77
	TI	SN75464	2897-85
75465	TI	SN75465	3310-83
75466	TI	SN75466	2894-118
			2897-13
			3310-142
75467	TI	SN75467	2894-136
			3310-143
75468	TI	SN75468	2894-100
			3310-84
75469	TI	SN75469	2894-71
			3310-85
75470	TI	SN75470	2897-14
75471	Fairchild	75471	2896-121
	TI	SN75471	2897-15
75472	Fairchild	75472	2897-37
	TI	SN75472	2897-54
75473	TI	SN75473	2897-116
75474	Fairchild	75474B	2897-69
	TI	SN75474	2897-86
75476	TI	SN75476	2897-16
75477	TI	SN75477	2897-60
75478	TI	SN75478	2897-117
			2897-121
75479	TI	SN75479	2897-87
			2897-90
7548	AD	AD7548	¶ 388-1
		AD7548J	★3112
			2854-46
		AD7548K	★3112
			2853-23
		AD7548S	★3112
			2854-47
		AD7548T	★3112
			2853-24
	PMI	PM7548	2866-11
75480	TI	SN75480	2877-18
7549	**AD**	**AD7549J**	★3111
			2867-23
		AD7549K	★3111
			2864-9
75490	TI	SN75490	2896-104
75491	Fairchild	75491	2876-102
	National	DS75491	2876-104
			¶ 398-1
	TI	SN75491	2876-106
		SN75491A	2876-107
75492	Fairchild	75492	2876-135
		75492A	2876-136
	National	DS75492	2876-137
			¶ 398-1
	TI	SN75492	2876-142
		SN75492A	2876-143
75493	National	DS75493	2876-105
75494	National	DS75494	2876-138
	TI	SN75494	2876-144
75497	TI	SN75497	2877-10
75498	TI	SN75498	2877-69
755	SGS	M755	3326-14
7550	AD	AD7550B	2846-18
	Cubit	7550	2017-30
	MicroPwr	**MP7550B**	★3206
			2846-17
75500	Intech	SN75500A	¶ 397-9
	TI	SN75500A	2877-102
		SN75500D	2877-103
75501	Intech	SN75501A	¶ 397-9
		SN75501C	¶ 398-3
	TI	SN75501C	2877-104
			¶ 398-4

Arranged alphanumerically from left to right.

Base Number	Source	Device	Page-Line
7551	National	DM7551	866-5
			¶ 361-1
75512	Intech	SN75512A	¶ 398-3
	TI	SN75512A	2877-83
			¶ 398-4
75513	Intech	SN75513A	¶ 398-3
	TI	SN75513A	2877-84
			¶ 398-4
75514	TI	SN75514	2877-85
75518	TI	SN75518	2877-105
7552	AD	AD7552	2845-43
7555	**Intersil**	**ICM7555**	★ **1090**
			3383-60
		ICM7555M	★ **1090**
			3383-61
	Maxim	ICM7555	3383-62
	Sanyo	LC7555	3400-80
75551	TI	SN75551	2874-48
75552	TI	SN75552	2874-42
75553	TI	SN75553	2874-45
75554	TI	SN75554	2874-39
75555	TI	SN75555	2874-35
75556	TI	SN75556	2874-36
7556	**Intersil**	**ICM7556**	★ **1090**
			3383-70
		ICM7556M	★ **1090**
			3383-71
	Maxim	ICM7556	3383-72
	National	DM7556	858-117
	Sanyo	LC7556	3400-81
75581	TI	SN75581	2877-12
75584	TI	SN75584A	2877-13
75590	TI	SN75590	2896-105
756	SGS	M756	3326-15
7560	AD	AD7560	3399-61
	National	DM7560	861-120
75601	Mostek	MK75601	2044-43
75602	Mostek	MK75602	2023-14
			2045-20
75603	TI	SN75603	2895-113
75604	TI	SN75604	2895-114
75605	TI	SN75605	2895-115
7563	National	DM7563	860-20
7570	**MicroPwr**	**MP7570J**	★ **3206**
			2835-3
		MP7570L	★ **3206**
			2838-45
	National	DM7570	881-170
			3856-52
75701	Mostek	MK75701	2045-43
7571	**AD**	**AD7571J**	★ **3128**
			2839-21
		AD7571K	★ **3128**
			2839-19
		AD7571S	★ **3128**
			2839-22
		AD7571T	★ **3128**
			2839-20
7572	**AD**	**AD7572J**	★ **3129**
			2844-16
		AD7572K	★ **3129**
			2839-54
		AD7572S	★ **3129**
			2844-17
		AD7572T	★ **3129**
			2839-55
7573	AD	AD7573J	2839-15
		AD7573K	2838-43
		AD7573S	2839-16
		AD7573T	2838-44
7574	AD	AD7574	¶ 393-6
			¶ 393-7
		AD7574A	2835-49
		AD7574B	2834-38
		AD7574J	2835-50
		AD7574K	2834-39
		AD7574S	2835-51
		AD7574T	2834-40
	MicroPwr	**MP7574A**	★ **688**
			★ **3206**
			2836-1
		MP7574B	★ **688**
			★ **3206**
			2835-45
		MP7574J	★ **688**
			★ **3206**
			(Continued)

Base Number	Source	Device	Page-Line
7574	MicroPwr	MP7574J	2836-2
		MP7574K	★ **688**
			★ **3206**
			2835-46
		MP7574S	★ **688**
			★ **3206**
			2836-4
		MP7574T	★ **688**
			★ **3206**
			2835-47
7575	**AD**	**AD7575J**	★ **3125**
			2836-38
		AD7575K	★ **3125**
			2834-24
	National	DM7575	4476-31
7576	**AD**	**AD7576A**	★ **3126**
			2837-28
		AD7576B	★ **3126**
			2836-42
		AD7576J	★ **3126**
			2837-29
		AD7576K	★ **3126**
			2836-43
		AD7576S	★ **3126**
			2836-44
			2837-30
	National	DM7576	4476-32
7578	**AD**	**AD7578K**	★ **3130**
			2845-12
		AD7578T	★ **3130**
			2845-13
758	**Signetics**	**µA758**	★ **3727**
			3322-138
75801	Mostek	MK75801	2044-30
75802	Mostek	MK75802	2043-46
			2044-52
75803	Mostek	MK75803	2043-41
7581	AD	AD7581A	3399-17
			1457-131
			1457-308
			1460-101
		AD7581B	3399-18
			1457-132
			1457-309
			1460-102
		AD7581C	3399-19
			1457-133
			1457-310
			1460-103
		AD7581J	3399-20
			1457-134
			1457-311
			1460-104
		AD7581K	2836-3
			3399-21
			1457-135
			1457-312
			1460-105
		AD7581L	3399-22
			1457-136
			1457-313
			1460-106
	MicroPwr	**MP7581A**	★ **688**
			★ **3206**
			3399-23
		MP7581B	★ **688**
			★ **3206**
			3399-24
		MP7581C	★ **688**
			★ **3206**
			3399-25
		MP7581J	★ **688**
			★ **3206**
			3399-26
		MP7581K	★ **688**
			★ **3206**
			3399-27
		MP7581L	★ **688**
			★ **3206**
			3399-28
		MP7581S	★ **688**
			★ **3206**
			3399-29
		MP7581T	★ **688**
			★ **3206**
			3399-30
			(Continued)

Base Number	Source	Device	Page-Line
7581	**MicroPwr**	**MP7581U**	★ **688**
			★ **3206**
			3399-31
7582	**AD**	**AD7582B**	★ **3130**
			2839-26
		AD7582K	★ **3130**
			2839-27
		AD7582T	★ **3130**
			2839-28
7589	National	DM7589	877-45
			3831-113
759	AD	AD7590DI	¶ 403-3
	Fairchild	A759	¶ 406-17
		µA759C	3330-98
			3334-77
			3355-17
		µA759M	3330-99
			3334-78
			3346-214
7590	AD	AD7590DIB	2823-59
		AD7590DIK	2823-60
	National	DM7590	3855-108
75902	Toshiba	TA75902	3335-2
7591	AD	AD7591DIB	2823-61
		AD7591DIK	2823-62
7592	AD	AD7592DIB	2822-83
		AD7592DIK	2822-84
7598	National	DM7598	¶ 361-1
75ALS195			
	TI	SN75ALS195	2887-44
			2887-45
75AS869			
	TI	SN75AS869	¶ 356-17
75C00	TI	TMS75C00	1470-95
			1431-15
75H000	**OKI**	**MSM75H000**	★ **4733**
			4453-25
75HC00	SSS	SS75HC00	825-66
75LS192			
	TI	SN75LS192	2884-22
75S06	National	DM75S06	3814-5
75S07	National	DM75S07	3814-6
		DM75S07A	3814-2
75S110	**Motorola**	**MC75S110**	★ **3211**
			2883-50
75S20	Fairchild	75S20	2899-4
75S234	Fairchild	75S234	2899-6
75S24	Fairchild	75S24	2899-11
75S28	National	DM75S28	3849-18
75S29	National	DM75S29	3849-17
75S50	National	DM75S50	862-52
76	**Burr-Brown**	**ADC76J**	★ **3146**
			2847-22
		ADC76K	★ **3146**
			2847-9
		ATF76	★ **3152**
			3398-12
	Intel	**PCB76**	★ **4073**
			2046-14
	PMI	DAC-76	¶ 387-11
			¶ 389-16
			¶ 393-12
760	Fairchild	µA760C	3313-9
		µA760M	3313-10
	SGS	M760	3378-46
		M760A	3378-47
7600	Cherry	CS7600	4462-17
	Goldstar	LL7600	4446-4
	Intersil	ICL7600C	3335-21
		ICL7600M	3335-22
	LSILogic	**LL7600**	★ **4676**
			4450-24
76000	TI	SN76000	3318-79
76002	TI	SN76002	3318-80
76005	TI	SN76005	3318-20
7601	**Goldstar**	**GM7601**	★ **4022**
			3835-50
	Intersil	ICL7601C	3335-23
		ICL7601M	3335-24
76011	TI	SN76011	3318-81
7602	**Goldstar**	**GM7602**	★ **4022**
			3832-114
	Harris	HM7602-2	3814-58
		HM7602-5	3814-50
76021	TI	SN76021	3318-82
76024	TI	SN76024	3318-83

Base Number	Source	Device	Page-Line
7603	Harris	HM7603-2	3814-59
		HM7603-5	3814-55
7604	**Goldstar**	**GM7604**	★ **4022**
			3839-75
7605	**Intersil**	**ICL7605C**	★ **3602**
			3306-74
		ICL7605M	★ **3602**
			3306-75
7606	**Intersil**	**ICL7606C**	★ **3602**
			3306-76
		ICL7606M	★ **3602**
			3306-77
	Toshiba	TA7606	3405-144
7607	Toshiba	TA7607A	3325-51
7608	Burr-Brown	MP7608	2033-59
		MP7608-I	2033-58
761	SGS	M761	3378-109
		M761A	3378-110
	Siemens	TAA761	3355-54
7610	Harris	HM7610-2	3814-125
		HM7610-5	3814-114
		HM7610A-2	3814-119
		HM7610A-5	3814-96
		HM7610B-2	3814-103
		HM7610B-5	3814-86
76104	TI	SN76104	3322-142
76105	TI	SN76105	3322-143
7611	Harris	HM7611-2	3814-126
		HM7611-5	3814-117
		HM7611A-2	3814-121
		HM7611A-5	3814-99
		HM7611B-2	3814-106
		HM7611B-5	3814-87
	Intersil	**ICL7611AC**	★ **3600**
			★ **3601**
			3346-1
		ICL7611AM	★ **3600**
			★ **3601**
			3346-2
		ICL7611BC	★ **3600**
			★ **3601**
			3351-16
		ICL7611BM	★ **3600**
			★ **3601**
			3351-17
		ICL7611C	★ **3600**
			★ **3601**
			3359-5
			3334-28
			3357-112
		ICL7611M	★ **3600**
			★ **3601**
			3347-28
			3334-34
	Maxim	ICL7611AC	3346-12
		ICL7611AM	3346-13
		ICL7611BC	3351-28
		ICL7611BM	3351-29
		ICL7611C	3359-6
			3334-29
			3357-113
		ICL7611DC	3357-107
		ICL7611DM	3357-108
		ICL7611M	3347-32
			3334-42
	Toshiba	TA7611A	3325-52
76110	TI	SN76110	3322-144
76111	TI	SN76111	3322-145
76113	TI	SN76113	3322-146
76115	TI	SN76115	3322-147
76116	TI	SN76116	3322-148
7612	**Intersil**	**ICL7612AC**	★ **3600**
			★ **3601**
			3346-3
		ICL7612AM	★ **3600**
			★ **3601**
			3346-4
		ICL7612BC	★ **3600**
			★ **3601**
			3351-18
		ICL7612BM	★ **3600**
			★ **3601**
			3351-19
		ICL7612C	★ **3600**
			★ **3601**
			3359-1
			(Continued)

¶ Indicates page number in Application Note Directory.
★ Indicates additional data is provided on the page noted.

Base Number	Source	Device	Page-Line
7612	Intersil	ICL7612C	3334-17
			3334-83
			3357-114
		ICL7612M	★**3600**
			★**3601**
			3359-7
			3334-35
			3334-87
	Maxim	ICL7612AC	3346-14
		ICL7612AM	3346-15
		ICL7612BC	3351-32
		ICL7612BM	3351-33
		ICL7612C	3359-3
			3334-19
			3334-85
			3357-116
		ICL7612DC	3351-36
		ICL7612DM	3351-37
		ICL7612M	3334-10
			3334-43
			3334-89
	Toshiba	TA7612A	2874-107
7613	**Intersil**	**ICL7613AC**	★**3600**
			★**3601**
			3346-7
		ICL7613BC	★**3600**
			★**3601**
			3351-22
		ICL7613BM	★**3600**
			★**3601**
			3351-23
		ICL7613C	★**3600**
			★**3601**
			3334-1
			3334-36
			3334-37
		ICL7613DC	★**3600**
			★**3601**
			3357-104
		ICL7613M	★**3600**
			★**3601**
			3334-2
			3334-38
	National	DM7613	864-205
	Toshiba	TA7613A	3321-108
76130	TI	SN76130	3319-62
76131	TI	SN76131	3319-63
7614	**Intersil**	**ICL7614AC**	★**3601**
			3346-8
		ICL7614AM	★**3601**
			3346-9
		ICL7614BC	★**3601**
			3351-24
		ICL7614BM	★**3601**
			3351-25
		ICL7614C	★**3601**
			3334-3
		ICL7614DC	★**3601**
			3357-105
	Maxim	ICL7614AC	3345-52
		ICL7614AM	3345-53
		ICL7614BC	3351-14
		ICL7614BM	3351-15
		ICL7614C	3334-11
		ICL7614DC	3357-102
		ICL7614DM	3357-103
	MicroPwr	**MP7614J**	★ **688**
			★**3206**
			2871-16
		MP7614K	★ **688**
			★**3206**
			2871-13
		MP7614S	★ **688**
			★**3206**
			2871-17
		MP7614T	★ **688**
			★**3206**
			2871-14
76149	TI	SN76149	3319-64
7615	**Intersil**	**ICL7615**	★**3601**
			3346-10
		ICL7615AC	★**3601**
			3346-11
		ICL7615BC	★**3601**
			3351-26
		ICL7615BM	★**3601**
			(Continued)
7615	Intersil	ICL7615BM	3351-27
		ICL7615C	★**3601**
			3334-4
		ICL7615DC	★**3601**
			3357-106
7616	**Goldstar**	**GM7616**	★**4022**
			3844-27
	Intersil	ICL7616AC	3346-5
		ICL7616AM	3346-6
		ICL7616BC	3351-20
		ICL7616BM	3351-21
		ICL7616C	3359-2
			3334-18
			3334-84
			3357-115
		ICL7616M	3334-5
			3334-39
			3334-88
	Maxim	ICL7616AC	3346-16
		ICL7616AM	3346-17
		ICL7616BC	3351-30
		ICL7616BM	3351-31
		ICL7616C	3359-4
			3334-20
			3334-86
			3357-117
		ICL7616DC	3351-34
		ICL7616DM	3351-35
		ICL7616M	3334-12
			3334-44
			3334-90
	MicroPwr	**MP7616J**	★ **688**
			★**3206**
			2873-3
		MP7616K	★ **688**
			★**3206**
			2873-10
		MP7616L	★ **688**
			★**3206**
			2873-4
		MP7616S	★ **688**
			★**3206**
			2873-5
		MP7616T	★ **688**
			★**3206**
			2872-9
	Toshiba	TA7616	3321-54
76161	Harris	HM76161-2	3819-61
		HM76161-5	3819-34
		HM76161A-5	3819-13
		HM76161B-5	3818-94
	Motorola	**MCM76161**	★**4124**
			3819-52
		MCM76161A	★**4124**
			3819-19
76165	Harris	HM76165-2	3820-25
		HM76165-5	3820-21
	Motorola	**MCM76165A**	★**4124**
			3820-1
7617	**Goldstar**	**GM7617**	★**4022**
			3841-18
7619	Toshiba	TA7619A	3325-85
762	Siemens	TAA762	3350-39
7620	Harris	HM7620-2	3815-69
		HM7620-5	3815-62
		HM7620A-2	3815-63
		HM7620A-5	3815-39
		HM7620B-2	3815-46
		HM7620B-5	3815-29
7621	Harris	HM7621-2	3815-70
		HM7621-5	3815-65
		HM7621A-2	3815-66
		HM7621A-5	3815-42
		HM7621B-2	3815-50
		HM7621B-5	3815-31
	Intersil	**ICL7621AC**	★**3600**
			★**3601**
			3362-40
		ICL7621AM	★**3600**
			★**3601**
			3362-41
		ICL7621BC	★**3600**
			★**3601**
			3365-2
		ICL7621BM	★**3600**
			★**3601**
			(Continued)
7621	Intersil	ICL7621BM	3365-3
		ICL7621C	★**3600**
			★**3601**
			3334-6
		ICL7621DC	★**3600**
			★**3601**
			3368-36
	Maxim	ICL7621AC	3362-42
		ICL7621AM	3362-43
		ICL7621BC	3365-4
		ICL7621BM	3365-5
		ICL7621C	3334-13
		ICL7621DC	3368-37
		ICL7621DM	3368-35
	MicroPwr	**MP7621A**	★ **688**
			★**3206**
			2866-33
		MP7621B	★ **688**
			★**3206**
			2863-24
		MP7621J	★ **688**
			★**3206**
			2866-34
		MP7621K	★ **688**
			★**3206**
			2863-25
		MP7621S	★ **688**
			★**3206**
			2866-35
		MP7621T	★ **688**
			★**3206**
			2863-26
		MP7621Z	★ **688**
			★**3206**
			2868-40
	Motorola	**MCM7621**	★**4124**
			3815-67
		MCM7621A	★**4124**
			3815-43
	Toshiba	TA7621	3325-53
7622	**Intersil**	**ICL7622AC**	★**3601**
			3362-36
		ICL7622AM	★**3601**
			3362-37
		ICL7622BC	★**3601**
			3365-6
		ICL7622BM	★**3601**
			3365-7
		ICL7622C	★**3601**
			3334-7
		ICL7622DC	★**3601**
			3368-38
	Maxim	ICL7622AC	3362-38
		ICL7622AM	3362-39
		ICL7622BC	3365-8
		ICL7622BM	3365-9
		ICL7622C	3334-14
		ICL7622DC	3368-39
	MicroPwr	**MP7622A**	★ **688**
			★**3206**
			2866-47
		MP7622B	★ **688**
			★**3206**
			2864-3
		MP7622H	★ **688**
			★**3206**
			2868-35
		MP7622J	★ **688**
			★**3206**
			2866-48
		MP7622K	★ **688**
			★**3206**
			2864-1
		MP7622R	★ **688**
			★**3206**
			2868-36
		MP7622S	★ **688**
			★**3206**
			2866-49
		MP7622T	★ **688**
			★**3206**
			2864-7
		MP7622Z	★ **688**
			★**3206**
			2868-37
	Toshiba	TA7622A	3325-54
7623	**MicroPwr**	**MP7623A**	★ **688**
			★**3206**
			2866-36
		MP7623B	★ **688**
			★**3206**
			2863-27
		MP7623J	★ **688**
			★**3206**
			2866-37
		MP7623K	★ **688**
			★**3206**
			2863-42
		MP7623S	★ **688**
			★**3206**
			2866-38
		MP7623T	★ **688**
			★**3206**
			2863-43
76242	TI	SN76242	3325-39
76243	TI	SN76243	3325-40
76246	TI	SN76246	3325-41
76267	TI	SN76267	3325-42
7628	**MicroPwr**	**MP7628J**	★ **688**
			★**3206**
			2853-9
		MP7628K	★ **688**
			★**3206**
			2851-31
		MP7628L	★ **688**
			★**3206**
			2850-32
		MP7628S	★ **688**
			★**3206**
			2853-10
		MP7628T	★ **688**
			★**3206**
			2851-32
		MP7628U	★ **688**
			★**3206**
			2850-33
76298	TI	SN76298	3325-43
7630	Toshiba	TA7630	3319-107
7631	**Intersil**	**ICL7631BC**	★**3600**
			★**3601**
			3369-2
		ICL7631BM	★**3600**
			★**3601**
			3369-3
		ICL7631C	★**3600**
			★**3601**
			3334-8
		ICL7631CC	★**3600**
			★**3601**
			3369-12
		ICL7631CM	★**3600**
			★**3601**
			3369-13
		ICL7631EC	★**3600**
			★**3601**
			3369-21
		ICL7631M	★**3600**
			★**3601**
			3347-29
	Maxim	ICL7631BC	3369-4
		ICL7631BM	3369-5
		ICL7631C	3334-15
		ICL7631CC	3369-14
		ICL7631CM	3369-15
		ICL7631EC	3369-22
		ICL7631EM	3369-25
		ICL7631M	3347-33
7632	**Intersil**	**ICL7632BC**	★**3600**
			★**3601**
			3369-6
		ICL7632BM	★**3600**
			★**3601**
			3369-7
		ICL7632C	★**3600**
			★**3601**
			3334-52
		ICL7632CC	★**3600**
			★**3601**
			3369-16
		ICL7632CM	★**3600**
			★**3601**
			3369-17
			(Continued)

Arranged alphanumerically from left to right.

Base Number	Source	Device	Page-Line
7632	**Intersil**	**ICL7632EC**	★3600
			★3601
			3369-23
		ICL7632M	★3600
			★3601
			3347-30
			3334-53
	Maxim	ICL7632BC	3369-8
		ICL7632BM	3369-9
		ICL7632C	3334-56
		ICL7632CC	3369-18
		ICL7632CM	3369-19
		ICL7632EC	3369-24
		ICL7632EM	3369-26
		ICL7632M	3347-34
			3334-57
	Toshiba	TA7632	3326-84
76321	Harris	HM76321-2	3820-64
		HM76321-5	3820-53
7633	**MicroPwr**	**MP7633**	★ 688
			★3206
			2858-16
76333	TI	SN76333	3399-86
76334	TI	SN76334	3399-87
7636	**MicroPwr**	**MP7636**	★3206
7639	Toshiba	TA7639	3324-37
764	SGS	M764	3382-39
		M764A	3382-40
7640	Harris	HM7640-2	3816-61
		HM7640-5	3816-52
		HM7640A-2	3816-26
		HM7640A-5	3816-3
	National	DS7640	2885-37
	Toshiba	TA7640A	3321-83
7641	Harris	HM7641-2	3816-64
		HM7641-5	3816-56
		HM7641A-2	3816-38
		HM7641A-5	3816-14
	Intersil	**ICL7641BC**	★3600
			★3601
			3371-9
		ICL7641BM	★3600
			★3601
			3371-10
		ICL7641CC	★3600
			★3601
			3373-16
		ICL7641CM	★3600
			★3601
			3373-17
		ICL7641EC	★3600
			★3601
			3374-10
	Maxim	ICL7641BC	3371-8
		ICL7641BM	3371-15
		ICL7641CC	3373-22
		ICL7641CM	3373-23
		ICL7641EC	3374-13
		ICL7641EM	3374-14
	Motorola	**MCM7641**	★4124
			3816-57
		MCM7641A	★4124
			3815-45
	National	DS7641	2888-29
	Toshiba	TA7641B	3321-44
7642	Harris	HM7642-2	3817-22
		HM7642-5	3817-23
		HM7642A-2	3817-35
		HM7642A-5	3817-10
		HM7642B-2	3817-17
		HM7642B-5	3816-102
	Intersil	**ICL7642BC**	★3600
			★3601
			3371-11
		ICL7642BM	★3600
			★3601
			3371-12
		ICL7642C	★3600
			★3601
			3334-9
		ICL7642CC	★3600
			★3601
			3373-18
		ICL7642CM	★3600
			★3601
			3373-19
			(Continued)
7642	**Intersil**	**ICL7642EC**	★3600
			★3601
			3374-11
		ICL7642M	★3600
			★3601
			3347-31
	Maxim	ICL7642BC	3371-13
		ICL7642BM	3371-14
		ICL7642C	3334-16
		ICL7642CC	3373-20
		ICL7642CM	3373-21
		ICL7642EC	3374-12
		ICL7642M	3374-9
7643	Harris	HM7643-2	3817-27
			3817-43
		HM7643-5	3817-28
		HM7643A-2	3817-36
		HM7643A-5	3817-11
		HM7643B-2	3817-20
		HM7643B-5	3817-4
	Motorola	**MCM7643**	★4124
			3817-37
		MCM7643A	★4124
			3817-13
7645	**PMI**	**PM7645**	★3637
76477	TI	SN76477	3327-114
			1468-52
76487	TI	SN76487	3319-90
76488	TI	SN76488	3319-91
76489	TI	SN76489	3319-84
		SN76489A	3319-85
7649	Harris	HM7649-2	3816-60
		HM7649-5	3816-28
		HM7649A-2	3816-39
		HM7649A-5	3816-7
	Motorola	**MCM7649**	★4124
			3816-29
		MCM7649A	★4124
			3816-9
76493	TI	SN76493	3319-86
76494	TI	SN76494	3319-87
76495	TI	SN76495	3319-88
765	NEC	μPD765A	1459-3
			1457-156
			1457-323
			1467-36
			1467-55
			1467-62
	SMC	FDC765A	1467-57
	Zilog	Z765A	1467-61
7650	**Datel**	**AM-7650**	★3158
			★3163
			3341-6
	Intersil	**ICL7650C**	★3601
			3335-9
	Maxim	ICL7650	3335-11
		ICL7650B	3335-25
		ICL7650C	3335-10
	TeledyneS	TSC7650	3335-8
7652	**Intersil**	**ICL7652**	★3601
			3335-12
	LinearTech	LTC7652C	3335-16
		LTC7652M	3335-17
	Maxim	ICL7652	3335-13
		ICL7652B	3335-28
	Siliconix	**SI7652B**	★3248
			★3250
			3335-18
		SI7652C	★3248
			★3250
			3335-19
76524	TI	SN76524	3326-26
76525	TI	SN76525	3325-137
7654	Toshiba	TA7654	2874-110
76544	TI	SN76544	3326-27
76545	TI	SN76545	3326-28
7655	Toshiba	TA7655	2874-111
76565	TI	SN76565	3324-56
76566	TI	SN76566	3398-115
7657	Toshiba	TA7657	3323-11
7658	Toshiba	TA7658	3319-67
7659	Toshiba	TA7659	3325-55
7660	**Datel**	**VI-7660C**	★3163
			3405-32
		VI-7660M	★3163
			3405-33
			(Continued)
7660	**Intersil**	**ICL7660**	★3603
			3405-34
			3405-46
			¶ 391-13
	Maxim	ICL7660	3405-47
		ICL7660C	3405-35
		ICL7660M	3405-36
	Siliconix	**SI7660A**	★3261
			3405-48
		SI7660B	★3261
			3405-37
			3405-49
		SI7660C	★3261
			3405-38
			3405-50
	TeledyneS	TSC7660	3405-51
			¶ 393-4
	Toshiba	TA7660	3325-56
76600	TI	SN76600	3327-89
76605	TI	SN76605	3323-79
76606	TI	SN76606	3323-80
7661	**Siliconix**	**SI7661A**	★3261
			3405-45
		SI7661B	★3261
			3405-43
		SI7661C	★3261
			3405-44
	Toshiba	TA7661	3325-57
7662	**Intersil**	**ICL7662C**	★3603
			3405-22
		ICL7662M	★3603
			3405-23
7663	**Intersil**	**ICL7663**	★3603
			3392-94
	Maxim	ICL7663	3392-95
		ICL7663A	3392-96
	Toshiba	TA7663	3324-36
76635	TI	SN76635	3321-43
7664	**Goldstar**	**GM7664**	★4022
			3847-26
	Intersil	**ICL7664**	★3603
			3394-48
	Maxim	ICL7664	3394-49
76641	Harris	HM76641-2	3821-71
		HM76641-5	3821-70
76642	TI	SN76642	3322-44
76643	TI	SN76643	3322-45
			3326-74
76644	TI	SN76644	3327-90
76645	TI	SN76645	3325-44
7665	**Goldstar**	**GM7665**	★4022
	Intersil	**ICL7665**	★3604
			3405-151
	Maxim	ICL7665	3405-148
		ICL7665A	3405-149
		ICL7665B	3405-150
76650	TI	SN76650	3327-91
76651	TI	SN76651	3326-75
7666	Toshiba	TA7666	2876-125
76660	TI	SN76660	3326-76
76665	TI	SN76665	3326-77
76666	TI	SN76666	3326-78
76669	TI	SN76669	3322-46
7667	**Intersil**	**ICL7667C**	★3604
			2895-50
		ICL7667M	★3604
			2895-51
	Toshiba	TA7667	2876-126
76675	TI	SN76675	3322-47
76676	TI	SN76676	3321-146
76678	TI	SN76678	3321-147
7668	Toshiba	TA7668B	3324-33
76688	TI	SN76688	3326-79
76689	TI	SN76689	3322-48
767	NEC	μPC767	3382-83
76701	TI	SN76701	3324-114
76702	TI	SN76702	3324-115
76710	TI	SN76710	3324-116
76711	TI	SN76711	3324-117
76720	TI	SN76720	3326-11
76721	TI	SN76721	3324-118
76727	TI	SN76727	3324-119
7673	**Intersil**	**ICL7673**	★3603
			1469-100
76730	TI	SN76730	3323-81
7675	Toshiba	TA7675A	3325-58
7676	Toshiba	TA7676	3325-59
7678	Toshiba	TA7678A	3325-60
7681	Harris	HM7681-2	3817-147
		HM7681-5	3817-128
		HM7681A-5	3817-102
	Motorola	**MCM7681**	★4124
			3817-129
		MCM7681A	★4124
			3817-104
76810	TI	SN76810	3328-51
76811	TI	SN76811	891-118
76812	TI	SN76812	3383-7
7682	**MicroPwr**	**MP7682XA**	★ 688
			★3208
			2832-41
		MP7682XB	★ 688
			★3208
			2832-28
		MP7682XC	★ 688
			★3208
			2832-18
		MP7682XJ	★ 688
			★3208
			2832-42
		MP7682XK	★ 688
			★3208
			2832-29
		MP7682XL	★ 688
			★3208
			2832-19
		MP7682XS	★ 688
			★3208
			2832-43
		MP7682XT	★ 688
			★3208
			2832-30
		MP7682XU	★ 688
			★3208
			2832-20
		MP7682YA	★ 688
			★3208
			2832-38
		MP7682YB	★ 688
			★3208
			2832-24
		MP7682YJ	★ 688
			★3208
			2832-39
		MP7682YK	★ 688
			★3208
			2832-25
		MP7682ZJ	★ 688
			★3208
			2832-40
7683	**MicroPwr**	**MP7683XA**	★ 688
			★3208
			2836-26
		MP7683XB	★ 688
			★3208
			2833-26
		MP7683XC	★ 688
			★3208
			2833-13
		MP7683XJ	★ 688
			★3208
			2836-27
		MP7683XK	★ 688
			★3208
			2833-27
		MP7683XL	★ 688
			★3208
			2833-14
		MP7683XS	★ 688
			★3208
			2836-28
		MP7683XT	★ 688
			★3208
			2833-28
		MP7683YJN	★ 688
			★3208
			2836-24
76831	TI	SN76831	3323-82
76832	TI	SN76832	¶ 420-10
		SN76832A	3323-83
7684	**MicroPwr**	**MP7684**	★ 688
			★3208
			(Continued)

¶ Indicates page number in Application Note Directory.
★ Indicates additional data is provided on the page noted.

Base Number	Source	Device	Page-Line
7684	MicroPwr	MP7684	2836-7
		MP7684K	★ **688**
			★ **3208**
			2836-8
		MP7684L	★ **688**
			★ **3208**
			2836-22
		MP7684Q	★ **688**
			★ **3208**
			2836-5
		MP7684S	★ **688**
			★ **3208**
			2836-25
		MP7684T	★ **688**
			★ **3208**
			2836-9
		MP7684U	★ **688**
			★ **3208**
			2836-23
		MP7684V	★ **688**
			★ **3208**
			2836-6
7685	Harris	HM7685-2	3818-53
		HM7685-5	3818-46
		HM7685A-2	3818-38
		HM7685A-5	3818-21
	MicroPwr	**MP7685**	★ **3208**
	Motorola	**MCM7685**	★ **4124**
			3818-47
		MCM7685A	★ **4124**
			3819-30
	Toshiba	TA7685	3319-68
7687	Toshiba	TA7687A	3321-85
7688	Toshiba	TA7688	3316-66
76881	TI	SN76881	3323-84
			¶ 420-10
76882	TI	SN76882	3323-85
			¶ 420-10
76889	TI	SN76889	3325-45
76891	TI	SN76891	3323-86
			¶ 420-10
76940	TI	SN76940	3381-83
76H000	**OKI**	**MSM76H000**	★ **4733**
			4453-26
76S128	National	DM76S128	3808-1
			3808-10
76S64	National	DM76S64	3808-2
			3808-11
77	**PMI**	**OP-77**	★ **3636**
770	**Fujitsu**	**C770H**	★ **4624**
			4444-47
		C770HB	★ **4624**
			4444-48
	Signetics	TCA770	3322-39
			3322-106
	TI	TAC770H	4456-14
7700	CalDevices	HCS7700	4440-25
77000	Cadnetix	CDX-77000	5023-2
		CDX77000	★ **5102**
	Fairchild	μA77000	3334-81
			3356-47
7705	Toshiba	TA7705	3324-39
7709	Toshiba	TA7709	3319-69
771	Fairchild	μA771AC	3346-28
		μA771AM	3346-29
		μA771BC	3352-10
		μA771BM	3352-11
		μA771C	3357-28
		μA771LC	3357-122
772	DataTrans	DT772	2035-5
	Fairchild	μA772AC	3362-48
		μA772AM	3362-49
		μA772BC	3365-12
		μA772BM	3365-13
		μA772C	3368-19
		μA772LC	3368-40
7720	**GouldAMI**	**S7720**	★ **3588**
			844-70
			3379-33
	NEC	μPD7720	1469-152
		μPD7720A	844-71
7738	Toshiba	TA7738	3323-150
774	DataTrans	DT774	2035-8
	Fairchild	μA774BC	3371-18
		μA774BM	3371-19
		μA774C	3373-34
			(Continued)
774	Fairchild	μA774LC	3373-49
	Harris	**HI774AJ-5**	★ **3186**
			2844-19
		HI774AK-5	★ **3186**
			2843-27
		HI774AL-5	★ **3186**
			2843-28
		HI774AS-2	★ **3186**
			2844-20
		HI774AT-2	★ **3186**
			2844-21
		HI774AU-2	★ **3186**
			2844-22
7742	TI	TMS7742	1431-16
7751	NEC	μPD7751	3323-140
	Sanyo	LA7751	3326-23
7752	NEC	μPD7752	3323-138
7755	Sanyo	LA7755	3326-24
7757	Toshiba	TA7757	3321-84
776	DY-4	DSTD-776	2039-23
	Fairchild	μA776C	3347-12
			3334-24
			3366-47
		μA776M	3334-25
			3365-16
	ThomsonCSF	μA776C	3355-1
		μA776M	3352-30
7761	NEC	μPD7761	3323-117
7762	NEC	μPD7762	3323-118
77650	Mostek	MK77650	2041-38
77655	Mostek	MK77655	2041-35
77665	Mostek	MK77665	2041-29
77666	Mostek	MK77666	2041-30
77670	Mostek	MK77670	2041-28
77671	Mostek	MK77671	2040-49
77672	Mostek	MK77672	2040-11
77673	Mostek	MK77673	2040-12
77674	Mostek	MK77674	2041-36
77676	Mostek	MK77676	2040-54
77677	Mostek	MK77677	2040-22
77678	Mostek	MK77678	2041-16
77679	Mostek	MK77679	2041-17
777	DY-4	DSTD-777	2039-19
	Intersil	μA777C	3353-15
7770	SGS	TDA7770	3324-20
77753	Mostek	MK77753	2041-53
77754	Mostek	MK77754-0	2042-16
77760	Mostek	MK77760	2041-48
77761	Mostek	MK77761-0	2042-20
77762	Mostek	MK77762	2041-47
77763	Mostek	MK77763	2042-4
77764	Mostek	MK77764	2042-25
77765	Mostek	MK77765	2042-29
778	DataTrans	DT778	2036-7
	DY-4	DVME-778	2043-34
77852	Mostek	MK77852	2041-45
77950	Mostek	MK77950	2042-38
77963	Mostek	MK77963-0	2042-39
77967	Mostek	MK77967	2042-34
77C20	**OKI**	**77C20**	★ **4733**
77H000	**OKI**	**MSM77H000**	★ **4733**
			4453-27
77LS181			
	National	DM77LS181	3817-155
77P20	NEC	μPD77P20	844-72
			1469-153
77S180	National	DM77S180	3817-134
77S181	National	DM77S181	3817-136
		DM77S181A	3817-34
77S184	National	DM77S184	3818-45
77S185	National	DM77S185	3818-48
		DM77S185A	3818-39
		DM77S185B	3818-24
77S188	National	DM77S188	3814-13
77S190	National	DM77S190	3819-58
77S191	National	DM77S191	3819-62
		DM77S191A	3819-35
		DM77S191B	3819-20
77S195	National	DM77S195A	3820-22
		DM77S195B	3820-14
77S280	National	DM77S280	3817-135
77S281	National	DM77S281	3817-137
77S288	National	DM77S288	3814-14
77S290	National	DM77S290	3819-59
77S291	National	DM77S291	3819-63
		DM77S291A	3819-36
		DM77S291B	3819-21
77S321	National	DM77S321	3820-54
77S401	National	DM77S401	3809-67
		DM77S401A	3809-78
77S402	National	DM77S402	3809-100
		DM77S402A	3809-107
77S421	National	DM77S421	3820-55
77SR181			
	National	DM77SR181	3817-83
77SR25	National	DM77SR25	3815-105
77SR474			
	National	DM77SR474	3815-103
77SR476			
	National	DM77SR476	3815-106
78	Amperex	BGY78	3324-74
	Fairchild	μ78HG	3393-8
		μA78GC	3393-7
		μA78MGC	3393-6
780	**Motorola**	**TL780-12C**	★ **3622**
			★ **3623**
			★ **3624**
			3387-47
		TL780-15C	★ **3622**
			★ **3623**
			★ **3624**
			3384-109
		TL780-5C	★ **3622**
			★ **3623**
			★ **3624**
			3384-110
	NEC	μPD780	1460-66
			1427-10
		μPD780-1	1460-67
		μPD780-2	1460-118
7800	National	DS7800	886-138
		LM7800	¶ 428-1
	NEC	μPD7800	1427-11
	Sanyo	LA7800	3326-134
78004	AT&T	M78004-20	3834-25
		M78004-24	3834-26
78005	Toshiba	TA78005A	3384-79
7801	NEC	μPD7801	1427-12
	Pro-Log	7801	2019-18
	Sanyo	LA7801	3326-103
78012	Toshiba	TA78012A	3387-21
78015	Toshiba	TA78015A	3388-19
7802	NEC	μPD7802	1427-13
	Pro-Log	7802	2017-36
	Sanyo	LA7802	3326-104
7803	Mostek	MK7803	2043-42
	National	DS7803	2893-40
	Pro-Log	7803A	2015-40
7804	Pro-Log	7804	2017-1
7805	Fairchild	μA7805C	3384-82
		μA7805M	3384-83
	Goldstar	**GL7805**	★ **3580**
			3384-84
	IPS	**IP7805**	★ **3599**
			3384-97
		IP7805A	★ **3599**
			3384-98
		IP7805AC	★ **3599**
			3384-99
		IP7805C	★ **3599**
			3384-100
	Motorola	**MC7805**	★ **3622**
			3384-105
		MC7805A	★ **3622**
			3384-106
		MC7805AC	★ **3622**
			3384-107
		MC7805C	★ **3622**
			3384-108
	National	LM7805	3384-116
	NEC	μPC7805	3384-65
	Panasonic	AN7805	3384-66
	Samsung	**MC7805C**	★ **3679**
			3384-67
	SGS	L7805	3384-68
		L7805AC	3384-117
		L7805C	3384-69
	SiliconG	SG7805ACK	3384-123
		SG7805ACP	3384-73
		SG7805ACR	3384-124
			(Continued)
7805	SiliconG	SG7805ACT	3384-50
		SG7805AK	3384-125
		SG7805AP	3384-74
		SG7805AT	3384-51
		SG7805CK	3384-126
		SG7805CP	3384-75
		SG7805CR	3384-127
		SG7805K	3384-128
		SG7805P	3384-76
	ThomsonCSF	μA7805	3384-78
	Unitrode	UC7805	3384-129
		UC7805A	3384-80
		UC7805AC	3384-81
		UC7805C	3384-130
	Ziatech	ZT7805	2019-16
7806	Fairchild	μA7806C	3385-96
	Motorola	**MC7806**	★ **3623**
			3385-101
		MC7806A	★ **3623**
			3385-102
		MC7806AC	★ **3623**
			3385-103
		MC7806C	★ **3623**
			3385-104
	Panasonic	AN7806	3385-89
	Pro-Log	7806	2017-7
	Samsung	**MC7806C**	★ **3679**
			3385-90
	Sanyo	LA7806	3326-105
	SGS	L7806	3385-105
		L7806AC	3385-106
		L7806C	3385-107
	SiliconG	SG7806ACK	3385-113
		SG7806ACP	3385-91
		SG7806ACR	3385-114
		SG7806ACT	3385-85
		SG7806AK	3385-115
		SG7806AP	3385-92
		SG7806AT	3385-86
		SG7806CK	3385-116
		SG7806CP	3385-93
		SG7806CR	3385-117
		SG7806CT	3385-87
		SG7806K	3385-118
		SG7806P	3385-94
		SG7806T	3385-88
	ThomsonCSF	μA7806	3385-95
	VersaLogic	VL7806	2017-19
7807	National	DS7807	2893-41
	NEC	μPD7807	1457-481
			1427-14
	Panasonic	AN7807	3385-133
	VersaLogic	VL7807	2017-20
7808	Fairchild	μA7808C	3386-37
		μA7808M	3386-38
	Goldstar	**GL7808**	★ **3580**
			3386-39
	Motorola	**MC7808**	★ **3623**
			3386-45
		MC7808A	★ **3623**
			3386-46
		MC7808AC	★ **3623**
			3386-47
		MC7808C	★ **3623**
			3386-48
	NEC	μPC7808	3386-33
	Panasonic	AN7808	3386-34
	Samsung	**MC7808C**	★ **3679**
			3386-35
	SGS	L7808	3386-49
		L7808AC	3386-50
		L7808C	3386-51
	SiliconG	SG7808ACK	3386-57
		SG7808ACP	3386-36
		SG7808ACR	3386-58
		SG7808ACT	3386-27
		SG7808AK	3386-59
		SG7808AP	3386-68
		SG7808AT	3386-28
		SG7808CK	3386-60
		SG7808CP	3386-69
		SG7808CR	3386-61
		SG7808CT	3386-29
		SG7808K	3386-62
		SG7808P	3386-70
		SG7808T	3386-30

Arranged alphanumerically from left to right.

PART NUMBER INDEX

Base Number	Source	Device	Page-Line
7809	NEC	μPD7809	1457-482
			1427-15
	Panasonic	AN7809	3386-83
	SGS	L7809	3386-84
7810	National	DS7810	864-38
	NEC	μPD7810	1460-1
			1427-16
	Panasonic	AN7810	3386-101
	S-MOS	SVM7810	3320-121
	Sanyo	LA7810	3326-106
78109	Mostek	MK78109	2042-17
7811	National	DS7811	864-39
	NEC	μPD7811	1460-2
			1427-17
78110	Mostek	MK78110	2042-26
7812	Fairchild	μA7812C	3387-24
		μA7812M	3387-25
	Goldstar	**GL7812**	★ **3580**
			3387-26
	IPS	**IP7812**	★ **3599**
			3387-33
		IP7812A	★ **3599**
			3387-34
		IP7812AC	★ **3599**
			3387-35
		IP7812C	★ **3599**
			3387-36
	Motorola	**MC7812**	★ **3623**
			3387-43
		MC7812A	★ **3623**
			3387-44
		MC7812AC	★ **3623**
			3387-45
		MC7812C	★ **3623**
			3387-46
	National	DS7812	864-100
		LM7812	3387-52
	NEC	μPC7812	3387-12
	Samsung	**MC7812C**	★ **3679**
			3387-13
	SGS	L7812	3387-53
			3387-74
		L7812AC	3387-54
		L7812C	3387-55
			3387-75
	SiliconG	SG7812ACK	3387-62
		SG7812ACP	3387-63
		SG7812ACR	3387-16
		SG7812ACT	3387-6
		SG7812AK	3387-64
		SG7812AR	3387-17
		SG7812AT	3387-7
		SG7812CK	3387-65
		SG7812CP	3387-66
		SG7812CR	3387-18
		SG7812CT	3387-8
		SG7812K	3387-67
		SG7812R	3387-19
		SG7812T	3387-9
	Unitrode	UC7812	3387-22
		UC7812A	3387-68
		UC7812AC	3387-69
		UC7812C	3387-23
78146	Mostek	MK78146	2040-23
7815	Fairchild	μA7815C	3388-24
		μA7815M	3388-25
	Goldstar	**GL7815**	★ **3580**
			3388-26
	IPS	**IP7815**	★ **3599**
			3388-33
		IP7815A	★ **3599**
			3388-34
		IP7815AC	★ **3599**
			3388-35
		IP7815C	★ **3599**
			3388-36
	Motorola	**MC7815**	★ **3624**
			3388-41
		MC7815A	★ **3624**
			3388-42
		MC7815AC	★ **3624**
			3388-43
		MC7815C	★ **3624**
			3388-44
	National	LM7815	3388-49
	NEC	μPC7815	3388-11
			(Continued)
7815	**Samsung**	**MC7815C**	★ **3679**
			3388-12
	SGS	L7815	3388-13
		L7815AC	3388-50
		L7815C	3388-14
	SiliconG	SG7815ACK	3388-54
		SG7815ACP	3388-55
		SG7815ACR	3388-15
		SG7815ACT	3388-6
		SG7815AK	3388-56
		SG7815AR	3388-16
		SG7815AT	3388-7
		SG7815CK	3388-57
		SG7815CP	3388-58
		SG7815CR	3388-17
		SG7815CT	3388-8
		SG7815K	3388-59
		SG7815R	3388-18
		SG7815T	3388-9
	Unitrode	UC7815	3388-20
		UC7815A	3388-21
		UC7815AC	3388-22
		UC7815C	3388-23
	WinSystems	LPM-7815	2019-13
		MCM-7815	2019-33
7817	SiliconG	SG7817AP	3388-118
78172	Mostek	MK78172-42	2039-58
		MK78172-56	2039-59
78175	Mostek	MK78175-40	2039-60
78177	Mostek	MK78177-26	2040-6
7818	Fairchild	μA7818C	3388-123
		μA7818M	3388-124
	Motorola	**MC7818**	★ **3624**
			3388-130
		MC7818A	★ **3624**
			3388-131
		MC7818AC	★ **3624**
			3389-1
		MC7818C	★ **3624**
			3389-2
	NEC	μPC7818	3388-111
	Panasonic	AN7818	3388-112
	Samsung	**MC7818C**	★ **3679**
			3388-113
	SGS	L7818	3388-116
		L7818AC	3389-3
		L7818C	3388-117
	SiliconG	SG7818ACK	3389-9
		SG7818ACP	3388-119
			3389-10
		SG7818ACT	3388-107
		SG7818AK	3389-11
		SG7818AP	3388-120
		SG7818AT	3388-108
		SG7818CK	3389-12
		SG7818CP	3389-13
		SG7818CT	3388-109
		SG7818K	3389-14
		SG7818P	3388-121
		SG7818T	3388-110
7819	National	DS7819	864-21
78192	Mostek	MK78192	2040-53
78198	Mostek	MK78198	2042-36
78199	Mostek	MK78199	2042-35
7820	**AD**	**AD7820K**	★ **3126**
			2836-34
		AD7820L	★ **3126**
			2836-10
		AD7820T	★ **3126**
			2836-35
		AD7820U	★ **3126**
			2836-11
	National	DS7820	2887-7
			¶ 395-5
			¶ 395-17
			¶ 396-12
		DS7820A	2887-3
	Panasonic	AN7820	3389-38
	SGS	L7820	2887-11
	SiliconG	SG7820ACT	3389-32
		SG7820AT	3389-33
		SG7820CT	3389-34
		SG7820K	3389-44
		SG7820R	3389-45
		SG7820T	3389-35
7822	National	DS7822	2885-8
7824	**AD**	**AD7824K**	★ **3125**
			2836-30
		AD7824T	★ **3125**
			2836-31
	Fairchild	μA7824C	3389-85
		μA7824M	3389-86
	Goldstar	**GL7824**	★ **3580**
			3389-87
	Motorola	**MC7824**	★ **3624**
			3389-92
		MC7824A	★ **3624**
			3389-93
		MC7824AC	★ **3624**
			3389-94
		MC7824C	★ **3624**
			3389-95
	NEC	μPC7824	3389-74
	Panasonic	AN7824	3389-75
	Samsung	**MC7824C**	★ **3679**
			3389-76
	SGS	L7824	3389-78
		L7824C	3389-79
	SiliconG	SG7824ACK	3389-101
		SG7824ACP	3389-80
		SG7824ACR	3389-102
		SG7824ACT	3389-70
		SG7824AK	3389-103
		SG7824AP	3389-81
		SG7824AT	3389-71
		SG7824CK	3389-104
		SG7824CP	3389-82
		SG7824CR	3389-105
		SG7824CT	3389-72
		SG7824K	3389-106
		SG7824P	3389-83
		SG7824T	3389-73
7828	**AD**	**AD7828K**	★ **3125**
			2836-32
		AD7828T	★ **3125**
			2836-33
7830	National	DS7830	2883-31
			¶ 395-5
			¶ 395-17
			¶ 396-12
7831	National	DS7831	2881-29
			2883-38
			¶ 361-1
			¶ 361-11
			¶ 395-5
	TI	**DS7831**	★ **721**
7832	National	DS7832	2881-23
			2883-40
			¶ 395-5
	TI	**DS7832**	★ **721**
7833	National	DS7833	2889-20
			¶ 395-5
7834	National	DS7834	2889-15
			¶ 395-5
7835	National	DS7835	2889-13
			¶ 395-5
7836	National	DS7836	2885-35
			¶ 395-5
7837	National	DS7837	2885-52
			¶ 395-5
7838	AMD	AM7838	2889-11
	National	DS7838	2889-12
			¶ 395-5
7839	National	DS7839	2889-18
			¶ 395-5
7840	Goldstar	LL7840	4446-5
	LSILogic	**LL7840**	★ **4676**
			4450-26
7842	National	DM7842	¶ 359-12
	VersaLogic	VL7842	2017-21
785	Siemens	TCA785	3405-136
7856	National	DS7856	¶ 398-1
7858	National	DS7858	¶ 398-1
7875	National	DM7875	855-143
	SGS	L7875	3386-5
		L7875C	3386-6
7880	National	DS7880	2877-14
	Pro-Log	7880	2017-8
7885	Fairchild	μA7885C	3386-76
	Pro-Log	7885	2019-19
	Samsung	**MC7885C**	★ **3679**
			3386-77
7889	National	DS7889	2877-61
	Pro-Log	7889	2019-9
78C05	NEC	μPD78C05	1427-18
78C06	NEC	μPD78C06	1427-19
78C120	National	DS78C120	2886-47
78C20	National	DS78C20	2887-8
78C29	National	MM78C29	838-139
			2884-1
78C30	National	MM78C30	838-47
			2883-18
78C75	SGS	L78C75C	3386-7
78H000	**OKI**	**MSM78H000**	★ **4733**
			4453-28
78H05	Fairchild	μA78H05	3385-53
		μA78H05A	3385-54
78H08	Fairchild	μA78H08C	3386-67
78H12	Fairchild	μA78H12A	3387-91
78L00	National	LM78L00	¶ 428-1
78L005	Toshiba	TA78L005	3384-15
		TA78L005A	3384-16
78L006	Toshiba	TA78L006	3385-73
		TA78L006A	3385-74
78L007	Toshiba	TA78L007	3385-129
		TA78L007A	3385-130
78L008	Toshiba	TA78L008	3386-13
		TA78L008A	3386-14
78L009	Toshiba	TA78L009	3386-80
		TA78L009A	3386-81
78L010	Toshiba	TA78L010	3386-91
		TA78L010A	3386-92
78L012	Toshiba	TA78L012	3386-118
		TA78L012A	3386-119
78L015	Toshiba	TA78L015	3387-120
		TA78L015A	3387-121
78L018	Toshiba	TA78L018	3388-96
		TA78L018A	3388-97
78L02	Motorola	MC78L02C	3384-2
78L020	Toshiba	TA78L020	3389-24
		TA78L020A	3389-25
78L024	Toshiba	TA78L024	3389-56
		TA78L024A	3389-57
78L04	Panasonic	AN78L04	3384-4
78L05	Fairchild	μA78L05C	3384-5
	Motorola	**MC78L05AC**	★ **3622**
			3384-7
		MC78L05C	★ **3622**
			3384-8
	National	LM78L05A	3384-10
		LM78L05C	3384-11
	NEC	μPC78L05	3384-12
	Panasonic	AN78L05	3384-13
	Samsung	**MC78L05**	★ **3679**
			3384-14
78L06	Panasonic	AN78L06	3385-72
78L07	Panasonic	AN78L07	3385-128
78L075	Toshiba	TA78L075	3386-3
		TA78L075A	3386-4
78L08	**Motorola**	**MC78L08AC**	★ **3623**
			3386-9
		MC78L08C	★ **3623**
			3386-10
	NEC	μPC78L08	3386-11
	Panasonic	AN78L08	3386-12
78L09	Fairchild	μA78L09C	3386-78
	Panasonic	AN78L09	3386-79
78L10	NEC	μPC78L10	3386-88
	Panasonic	AN78L10	3386-89
78L12	Fairchild	μA78L12C	3386-108
	Motorola	**MC78L12AC**	★ **3623**
			3386-109
		MC78L12C	★ **3623**
			3386-110
	National	DS78L12	886-143
		LM78L12A	3386-113
		LM78L12C	3386-114
	NEC	μPC78L12	3386-115
	Panasonic	AN78L12	3386-116
	Samsung	**MC78L12**	★ **3679**
			3386-117
78L132	Toshiba	TA78L132	3387-101
		TA78L132A	3387-102
78L14	Raytheon	CGA78L14	4454-10
78L15	Fairchild	μA78L15C	3387-110
	Motorola	**MC78L15AC**	★ **3624**
			3387-111
		MC78L15C	★ **3624**
			(Continued)

¶ Indicates page number in Application Note Directory.
★ Indicates additional data is provided on the page noted.

Base Number	Source	Device	Page-Line
78L15	Motorola	MC78L15C	3387-112
	National	LM78L15A	3387-115
		LM78L15C	3387-116
	NEC	µPC78L15	3387-117
	Panasonic	AN78L15	3387-118
	Samsung	**MC78L15**	★**3679** 3387-119
78L18	**Motorola**	**MC78L18AC**	★**3624** 3388-93
		MC78L18C	★**3624** 3388-94
	Panasonic	AN78L18	3388-95
78L20	National	DS78L20	2886-54
	Panasonic	AN78L20	3389-23
78L24	**Motorola**	**MC78L24AC**	★**3624** 3389-53
		MC78L24C	★**3624** 3389-54
	Panasonic	AN78L24	3389-55
78L62	Fairchild	µA78L62C	3385-127
78L82	Fairchild	µA78L82C	3386-72
78LS120	National	DS78LS120	2886-45
78M05	Fairchild	µA78M05C	3384-35
		µA78M05M	3384-36
	Motorola	**MC78M05C**	★**3622** 3384-38
	National	LM78M05	3384-40
	NEC	µPC78M05	3384-41
	Samsung	**MC78M05C**	★**3679** 3384-42
	SGS	L78M05C	3384-47
	TI	**µA78M05M**	★ **720** 3384-52
78M06	Fairchild	µA78M06C	3385-76
		µA78M06M	3385-77
	Motorola	**MC78M06C**	★**3623** 3385-79
	Panasonic	AN78M06	3385-80
	Samsung	**MC78M06C**	★**3679** 3385-81
	SGS	L78M06C	3385-82
78M07	Panasonic	AN78M07	3385-132
78M08	Fairchild	µA78M08C	3386-17
		µA78M08M	3386-18
	Motorola	**MC78M08C**	★**3623** 3386-20
	NEC	µPC78M08	3386-21
	Panasonic	AN78M08	3386-22
	Samsung	**MC78M08C**	★**3679** 3386-23
	SGS	L78M08C	3386-24
	TI	**µA78M08M**	★ **720** 3386-31
78M10	NEC	µPC78M10	3386-97
	Panasonic	AN78M10	3386-90
	Samsung	**MC78M10C**	★**3679** 3386-98
78M12	Fairchild	µA78M12C	3386-122
		µA78M12M	3386-123
	Motorola	**MC78M12C**	★**3623** 3386-125
	National	LM78M12	3386-127
	NEC	µPC78M12	3386-128
	Panasonic	AN78M12	3386-129
	Samsung	**MC78M12C**	★**3679** 3387-1
	SGS	L78M12C	3387-3
	TI	**µA78M12M**	★ **720** 3387-10
78M15	Fairchild	µA78M15C	3387-124
		µA78M15M	3387-125
	Motorola	**MC78M15C**	★**3624** 3387-127
	National	LM78M15	3387-129
	NEC	µPC78M15	3387-130
	Panasonic	AN78M15	3388-1
	Samsung	**MC78M15C**	★**3679** 3388-2
	SGS	L78M15C	3388-4
78M18	**Motorola**	**MC78M18C**	★**3624** 3388-100
	NEC	µPC78M18	3388-101
	Panasonic	AN78M18	3388-102
	Samsung	**MC78M18C**	★**3679** (Continued)
78M18	Samsung	MC78M18C	3388-103
	SGS	L78M18C	3388-104
78M20	**Motorola**	**MC78M20C**	★**3624** 3389-27
	Panasonic	AN78M20	3389-28
	SGS	L78M20C	3389-29
78M24	Fairchild	µA78M24C	3389-60
		µA78M24M	3389-61
	Motorola	MC78M24C	3389-63
	NEC	µPC78M24	3389-64
	Panasonic	AN78M24	3389-65
	Samsung	**MC78M24C**	★**3679** 3389-66
	SGS	L78M24C	3389-67
78N05	Panasonic	AN78N05	3384-33
78N06	Panasonic	AN78N06	3385-75
78N07	Panasonic	AN78N07	3385-131
78N08	Panasonic	AN78N08	3386-16
78N09	Panasonic	AN78N09	3386-82
78N10	Panasonic	AN78N10	3386-94
78N12	Panasonic	AN78N12	3386-121
78N15	Panasonic	AN78N15	3387-123
78N18	Panasonic	AN78N18	3388-98
78N20	Panasonic	AN78N20	3389-26
78N24	Panasonic	AN78N24	3389-58
78P05	Fairchild	µA78P05	3385-66
78P09	NEC	µPD78P09	1457-483 1427-20
78P12	Fairchild	µA78P12	3387-97
78S05	SGS	L78S05	3385-4
		L78S05C	3385-5
78S09	SGS	L78S09	3386-85
		SL78S09C	3386-86
78S10	SGS	L78S10	3386-104
		L78S10C	3386-105
78S12	SGS	L78S12C	3387-76
78S15	SGS	L78S15	3388-63
		L78S15C	3388-64
78S18	SGS	L78S18	3389-18
		L78S18C	3389-19
78S24	SGS	L78S24	3389-111
		L78S24C	3389-112
78S40	Fairchild	µA78S40	¶ 428-2
		µA78S40C	3395-105
		µA78S40M	3395-106
	Motorola	**µA78S40**	★**3626** 3396-35 ¶ 427-18
	Samsung	**µA78S40**	★**3679** 3396-57
78S75	SGS	L78S75	3386-8
78T05	**Motorola**	**MC78T05**	★**3622** 3385-30
		MC78T05A	★**3622** 3385-31
		MC78T05AC	★**3622** 3385-32
		MC78T05C	★**3622** 3385-33
78T06	**Motorola**	**MC78T06**	★**3623** 3385-123
		MC78T06C	★**3623** 3385-124
78T08	**Motorola**	**MC78T08**	★**3623** 3386-65
		MC78T08C	★**3623** 3386-66
78T12	**Motorola**	**MC78T12**	★**3623** 3387-84
		MC78T12A	★**3623** 3387-85
		MC78T12AC	★**3623** 3387-86
		MC78T12C	★**3623** 3387-87
78T15	**Motorola**	**MC78T15**	★**3624** 3388-76
		MC78T15A	★**3624** 3388-77
		MC78T15AC	★**3624** 3388-78
		MC78T15C	★**3624** 3388-79
78T18	**Motorola**	**MC78T18**	★**3624** 3389-15 (Continued)
78T18	**Motorola**	**MC78T18C**	★**3624** 3389-16
78T24	**Motorola**	**MC78T24**	★**3624** 3389-108
		MC78T24C	★**3624** 3389-109
79	Fairchild	µA79GC	3394-58
		µA79HG	3394-51
		µA79MGC	3394-57
7900	Cadnetix	CDX-7900	5017-2
		CDX7900	★**5102**
	Sanyo	LA7900	3326-113
79000	Cadnetix	CDX-79000	5017-3 5023-3
		CDX79000	★**5102**
79004	AT&T	M79004-20	3834-29
		M79004-24	3834-30
7901	AMD	AM7901A	3381-48
79018	AT&T	M79018-150	3839-52
7902	**Motorola**	**MC7902C**	★**3622** 3389-122
	Samsung	**MC7902C**	★**3679** 3389-123
7905	AMD	AM7905A	3381-49
	Fairchild	µA7905C	3390-29
		µA7905M	3390-30
	Goldstar	**GL7905**	★**3580** 3390-31
	IPS	**IP7905**	★**3599** 3390-38
		IP7905A	★**3599** 3390-39
		IP7905AC	★**3599** 3390-40
		IP7905C	★**3599** 3390-41
	Motorola	**MC7905**	★**3622** 3390-75
		MC7905C	★**3622** 3390-44
	National	LM7905	3390-48
	NEC	µPC7905	3390-23
	Panasonic	AN7905	3390-24
	Samsung	**MC7905-2C**	★**3679** 3390-88
		MC7905C	★**3679** 3390-25
	SGS	L7905C	3390-49
	SiliconG	SG7905	3390-55 3390-82 3390-83 3390-84 3390-85
		SG7905A	3390-56
		SG7905C	3390-57
	ThomsonCSF	µA7905	3390-58
	Unitrode	UC7905	3390-59
		UC7905A	3390-60
		UC7905AC	3390-61
		UC7905C	3390-62
79052	Motorola	MC79052C	3390-63
7906	Motorola	MC7906C	3390-96
	Panasonic	AN7906	3390-92
	Samsung	**MC7906C**	★**3679** 3390-93
7907	Panasonic	AN7907	3390-101
7908	Fairchild	µA7908C	3390-109
		µA7908M	3390-104
	Motorola	MC7908C	3390-111
	NEC	µPC7908	3390-112
	Samsung	**MC7908C**	★**3679** 3390-113
	SGS	L7908C	3390-114
	SiliconG	SG7908	3390-120
		SG7908A	3390-121
		SG7908AC	3390-122
		SG7908C	3390-123
7909	**Goldstar**	**GL7909**	★**3580** 3390-128
	Panasonic	AN7909	3390-127
791	Fairchild	A791	¶ 406-17
	NEC	µPD791	3400-68
	ThomsonCSF	µA791	3355-47
7910	AMD	AM7910	3379-103
	Cermetek	AMD7910	¶ 395-18
	Panasonic	AN7910	3391-3 (Continued)
7910	S-MOS	SVM7910	3316-140
	ThomsonCSF	EF7910	3379-104
7911	AMD	AM7911	3380-13
7911CP3	Matrix	7911CP3	2019-3
7911SP9	Matrix	7911SP9	2019-5
7912	Fairchild	µA7912C	3391-36
		µA7912M	3391-37
	Goldstar	**GL7912**	★**3580** 3391-38
	IPS	**IP7912**	★**3599** 3391-45
		IP7912A	★**3599** 3391-46
		IP7912AC	★**3599** 3391-47
		IP7912C	★**3599** 3391-48
	Motorola	MC7912AC	3391-51
		MC7912C	3391-52
	National	LM7912	3391-53
	NEC	µPC7912	3391-30
	Panasonic	AN7912	3391-31
	Samsung	**MC7912C**	★**3679** 3391-32
	SGS	L7912C	3391-54
	SiliconG	SG7912	3391-60
		SG7912A	3391-61
		SG7912AC	3391-62
		SG7912C	3391-63
	ThomsonCSF	µA7912	3391-64
	Unitrode	UC7912	3391-65
		UC7912A	3391-66
		UC7912AC	3391-67
		UC7912C	3391-68
7915	Fairchild	µA7915C	3391-102
		µA7915M	3391-103
	Goldstar	**GL7915**	★**3580** 3391-104
	IPS	**IP7915**	★**3599** 3391-111
		IP7915A	★**3599** 3391-112
		IP7915AC	★**3599** 3391-113
		IP7915C	★**3599** 3391-114
	Motorola	MC7915AC	3391-117
		MC7915C	3391-118
	National	LM7915	3391-119
	NEC	µPC7915	3391-96
	Panasonic	AN7915	3391-97
	Samsung	**MC7915C**	★**3679** 3391-98
	SGS	L7915C	3391-120
	SiliconG	SG7915	3391-126
		SG7915A	3391-127
		SG7915AC	3391-128
		SG7915C	3391-129
	ThomsonCSF	µA7915	3391-130
	Unitrode	UC7915	3391-131
		UC7915A	3391-132
		UC7915AC	3391-133
		UC7915C	3391-134
7918	Motorola	MC7918C	3392-17
	NEC	µPC7918	3392-12
	Panasonic	AN7918	3392-13
	Samsung	**MC7918C**	★**3679** 3392-14
	SGS	L7918C	3392-19
	SiliconG	SG7918	3392-25
		SG7918A	3392-26
		SG7918AC	3392-27
		SG7918C	3392-28
792	NEC	µPD792	3400-63
	Plessey	SL792	3306-10
7920	Panasonic	AN7920	3392-33
	S-MOS	SVM7920	3316-141
	SGS	L7920C	3392-36
	SiliconG	SG7920	3392-39
		SG7920A	3392-40
		SG7920AC	3392-41
		SG7920C	3392-42
7924	**Goldstar**	**GL7924**	★**3580** 3392-56 (Continued)

Arranged alphanumerically from left to right.

Base Number	Source	Device	Page-Line
7924	Motorola	MC7924C	3392-59
	NEC	µPC7924	3392-53
	Panasonic	AN7924	3392-54
	Samsung	**MC7924C**	**★ 3679**
			3392-55
	SGS	L7924C	3392-60
793	Plessey	SL793	3306-11
7930	S-MOS	SVM7930	3316-142
7940	S-MOS	SVM7940	3316-143
795	NEC	µPD795	3400-20
			3400-56
7950	AMD	AM7950	3381-52
	S-MOS	SVM7950	3316-144
7952	SGS	L7952C	3390-76
7953	AMD	AM7953	3381-53
796	Chrislin	CI-796-EDC	2036-48
		CI-796-EDC-2MB	2036-31
7960	S-MOS	SVM7960	3316-145
	Sanyo	LC7960	816-13
7961	Sanyo	LC7961	816-51
7970	AMD	AM7970	3379-31
			1469-116
	S-MOS	SVM7970	3316-146
798	Fairchild	µA798C	3366-55
799	NEC	µPD799	3400-64
7990	AMD	AM7990	1466-96
			1466-99
		Am7990	¶ 378-16
	S-MOS	SVM7990	3316-147
7991	AMD	AM7991A	1466-104
		Am7991	¶ 378-16
7992	AMD	AM7992A	1466-105
7995	AMD	AM7995	1466-106
79H000	**OKI**	**MSM79H000**	**★ 4733**
			4453-23
79L03	Motorola	MC79L03AC	3389-126
		MC79L03C	3389-127
79L04	Panasonic	AN79L04	3390-1
79L05	**Motorola**	**MC79L05AC**	**★ 3622**
			3390-3
		MC79L05C	**★ 3622**
			3390-4
	National	LM79L05	3390-6
		LM79L05A	3390-7
	Panasonic	AN79L05	3390-8
	Samsung	**MC79L05C**	**★ 3679**
			3390-9
79L06	Panasonic	AN79L06	3390-89
79L12	Motorola	MC79L12AC	3391-7
		MC79L12C	3391-8
	National	LM79L12	3391-10
		LM79L12A	3391-11
	Panasonic	AN79L12	3391-12
	Samsung	**MC79L12C**	**★ 3679**
			3391-13
79L15	Motorola	MC79L15A	3391-92
		MC79L15AC	3391-71
		MC79L15C	3391-72
	National	LM79L15	3391-74
		LM79L15A	3391-75
	Panasonic	AN79L15	3391-76
	Samsung	**MC79L15C**	**★ 3679**
			3391-77
79L18	Motorola	MC79L18AC	3392-18
		MC79L18C	3392-6
	Panasonic	AN79L18	3392-7
79L20	Panasonic	AN79L20	3392-30
79L24	Motorola	MC79L24AC	3392-48
		MC79L24C	3392-49
	Panasonic	AN79L24	3392-50
79M05	Fairchild	µA79M05AC	3390-12
		µA79M05M	3390-13
	Motorola	**MC79M05**	**★ 3622**
			3390-14
	National	LM79M05	3390-18
	Samsung	MC79M05C	3390-19
	TI	**µA79M05**	**★ 720**
79M06	Samsung	MC79M06C	3390-91
79M08	Fairchild	µA79M08AC	3390-105
	Samsung	**MC79M08C**	**★ 3679**
			3390-106
79M10	**Samsung**	**MC79M10**	**★ 3679**
			3391-2
79M12	Fairchild	µA79M12AC	3391-20
		µA79M12M	3391-21
	Motorola	MC79M12	3391-22
			(Continued)
79M12	Motorola	MC79M12C	3391-23
	National	LM79M12	3391-25
	Samsung	**MC79M12C**	**★ 3679**
			3391-26
79M15	Fairchild	µA79M15AC	3391-85
		µA79M15M	3391-86
	Motorola	MC79M15	3391-87
		MC79M15C	3391-88
	National	LM79M15	3391-90
	Samsung	**MC79M15C**	**★ 3679**
			3391-91
79M18	**Samsung**	**MC79M18**	**★ 3679**
			3392-9
79M24	**Samsung**	**MC79M24C**	**★ 3679**
			3392-52
79N04	Panasonic	AN79N04	3390-2
79N05	Panasonic	AN79N05	3390-11
79N06	Panasonic	AN79N06	3390-90
79N07	Panasonic	AN79N07	3390-100
79N08	Panasonic	AN79N08	3390-103
79N09	Panasonic	AN79N09	3390-126
79N10	Panasonic	AN79N10	3391-1
79N12	Panasonic	AN79N12	3391-19
79N15	Panasonic	AN79N15	3391-84
79N18	Panasonic	AN79N18	3392-8
79N20	Panasonic	AN79N20	3392-31
79N24	Panasonic	AN79N24	3392-51
7C103	**VTI**	**VL7C103**	**★ 1751**
			★ 1752
			★ 1768
			3380-71
7C122	**Cypress**	**CY7C122-15C**	**★ 4002**
			★ 4005
			3832-113
		CY7C122-25C	**★ 4002**
			★ 4005
			3833-6
		CY7C122-25M	**★ 4002**
			★ 4005
			3833-7
		CY7C122-35C	**★ 4002**
			★ 4005
			3833-12
		CY7C122-35M	**★ 4002**
			★ 4005
			3833-13
7C128	Calmos	CA7C128	3837-46
	Cypress	**CY7C128-35C**	**★ 4002**
			★ 4005
			3837-48
		CY7C128-45C	**★ 4002**
			★ 4005
			3837-53
		CY7C128-45M	**★ 4002**
			★ 4005
			3837-54
		CY7C128-55C	**★ 4002**
			★ 4005
			3837-67
		CY7C128-55M	**★ 4002**
			★ 4005
			3837-68
7C129	**Cypress**	**CY7C129-35C**	**★ 4002**
			★ 4005
			3837-49
		CY7C129-45C	**★ 4002**
			★ 4005
			3837-55
		CY7C129-45M	**★ 4002**
			★ 4005
			3837-56
		CY7C129-55C	**★ 4002**
			★ 4005
			3837-69
		CY7C129-55M	**★ 4002**
			★ 4005
			3837-70
7C147	**Cypress**	**CY7C147-25C**	**★ 4002**
			★ 4005
			3839-74
		CY7C147-35C	**★ 4002**
			★ 4005
			3839-90
		CY7C147-35M	**★ 4002**
			★ 4005
			3839-91
			(Continued)
7C147	**Cypress**	**CY7C147-45C**	**★ 4002**
			★ 4005
			3839-106
		CY7C147-45M	**★ 4002**
			★ 4005
			3839-107
7C148	**Cypress**	**CY7C148-25C**	**★ 4002**
			★ 4005
			3835-48
		CY7C148-35C	**★ 4002**
			★ 4005
			3835-65
		CY7C148-35M	**★ 4002**
			★ 4005
			3835-66
		CY7C148-45C	**★ 4002**
			★ 4005
			3835-85
		CY7C148-45M	**★ 4002**
			★ 4005
			3835-86
7C149	**Cypress**	**CY7C149-25C**	**★ 4002**
			★ 4005
			3835-49
		CY7C149-35C	**★ 4002**
			★ 4005
			3835-67
		CY7C149-35M	**★ 4002**
			★ 4005
			3835-68
		CY7C149-45C	**★ 4002**
			★ 4005
			3835-87
		CY7C149-45M	**★ 4002**
			★ 4005
			3835-88
7C150	**Cypress**	**CY7C150-15C**	**★ 4002**
			★ 4005
			3835-35
		CY7C150-25C	**★ 4002**
			★ 4005
			3835-51
		CY7C150-25M	**★ 4002**
			★ 4005
			3835-52
		CY7C150-35C	**★ 4002**
			★ 4005
			3835-70
		CY7C150-35M	**★ 4002**
			★ 4005
			3835-71
7C161	**Cypress**	**CY7C161-25C**	**★ 4003**
			3844-98
		CY7C161-35C	**★ 4003**
			3844-114
		CY7C161-35M	**★ 4003**
			3844-115
		CY7C161-45C	**★ 4003**
			3845-10
		CY7C161-45M	**★ 4003**
			3845-11
7C162	**Cypress**	**CY7C162-25C**	**★ 4003**
			3844-99
		CY7C162-35C	**★ 4003**
			3844-116
		CY7C162-35M	**★ 4003**
			3844-117
		CY7C162-45C	**★ 4003**
			3845-12
		CY7C162-45M	**★ 4003**
			3845-13
7C164	**Cypress**	**CY7C164-25C**	**★ 4003**
			3844-94
		CY7C164-35C	**★ 4003**
			3844-100
		CY7C164-35M	**★ 4003**
			3844-101
		CY7C164-45C	**★ 4003**
			3844-120
		CY7C164-45M	**★ 4003**
			3844-121
7C166	**Cypress**	**CY7C166-25C**	**★ 4003**
			3844-96
		CY7C166-35C	**★ 4003**
			3844-106
		CY7C166-35M	**★ 4003**
			(Continued)
7C166	Cypress	CY7C166-35M	3844-107
		CY7C166-45C	**★ 4003**
			3845-4
		CY7C166-45M	**★ 4003**
			3845-5
7C167	**Cypress**	**CY7C167-25C**	**★ 4002**
			★ 4004
			3843-108
		CY7C167-35C	**★ 4002**
			★ 4004
			3844-11
		CY7C167-35M	**★ 4002**
			★ 4004
			3844-12
		CY7C167-45C	**★ 4002**
			★ 4004
			3844-24
		CY7C167-45M	**★ 4002**
			★ 4004
			3844-25
7C168	**Cypress**	**CY7C168-25C**	**★ 4002**
			★ 4004
			3840-120
		CY7C168-35C	**★ 4002**
			★ 4004
			3841-13
		CY7C168-35M	**★ 4002**
			★ 4004
			3841-14
		CY7C168-45C	**★ 4002**
			★ 4004
			3841-53
		CY7C168-45M	**★ 4002**
			★ 4004
			3841-54
7C169	**Cypress**	**CY7C169-25C**	**★ 4002**
			★ 4004
			3840-121
		CY7C169-35C	**★ 4002**
			★ 4004
			3841-15
		CY7C169-35M	**★ 4002**
			★ 4004
			3841-16
		CY7C169-40C	**★ 4002**
			★ 4004
			3841-48
		CY7C169-40M	**★ 4002**
			★ 4004
			3841-49
7C170	**Cypress**	**CY7C170-35C**	**★ 4003**
			3841-28
		CY7C170-35M	**★ 4003**
			3841-29
		CY7C170-45C	**★ 4003**
			3841-69
		CY7C170-45M	**★ 4003**
			3841-70
7C171	**Cypress**	**CY7C171-25C**	**★ 4003**
			3841-4
		CY7C171-35C	**★ 4003**
			3841-31
		CY7C171-35M	**★ 4003**
			3841-32
		CY7C171-45C	**★ 4003**
			3841-72
		CY7C171-45M	**★ 4003**
			3841-73
7C172	**Cypress**	**CY7C172-25C**	**★ 4003**
			3841-5
		CY7C172-35C	**★ 4003**
			3841-33
		CY7C172-35M	**★ 4003**
			3841-34
		CY7C172-45C	**★ 4003**
			3841-74
		CY7C172-45M	**★ 4003**
			3841-75
7C185	Cypress	C7C185-55M	3842-127
		CY7C185-35C	**★ 4003**
			3842-115
		CY7C185-45C	**★ 4003**
			3842-119
		CY7C185-45M	**★ 4003**
			3842-120
			(Continued)

¶ Indicates page number in Application Note Directory.
★ Indicates additional data is provided on the page noted.

Base Number	Source	Device	Page-Line
7C185	Cypress	CY7C185-55C	★4003 3842-128
7C186	Cypress	CY7C186-35C	★4003 3842-116
		CY7C186-45C	★4003 3842-121
		CY7C186-45M	★4003 3842-122
		CY7C186-55C	★4003 3842-129
		CY7C186-55M	★4003 3842-130
7C187	Cypress	CY7C187-25C	★4003 3846-88
		CY7C187-35C	★4003 3846-92
		CY7C187-35M	★4003 3846-93
		CY7C187-45C	★4003 3847-3
		CY7C187-45M	★4003 3847-4
		CY7C187-55C	★4003 3847-21
7C189	Cypress	CY7C189-18C	★4002 ★4005 3831-14
		CY7C189-25C	★4002 ★4005 3831-20
		CY7C189-25M	★4002 ★4005 3831-21
		CY7C189C	★4002 ★4005 831-95
		CY7C189M	★4002 ★4005 831-101
7C190	Cypress	CY7C190-18C	★4002 ★4005 3831-15
		CY7C190-25C	★4002 ★4005 3831-22
		CY7C190-25M	★4002 ★4005 3831-23
		CY7C190C	★4002 ★4005 831-96
		CY7C190M	★4002 ★4005 831-97
7C211	VTI	VL7C211	★1751 ★1752 ★1769 3380-50
7C212	VTI	VL7C212A	★1751 ★1770 3379-111
7C225	Cypress	CY7C225-30C	★4006 3815-85
		CY7C225-35M	★4006 3815-88
		CY7C225-40C	★4006 3815-101
		CY7C225-40M	★4006 3815-102
7C235	Cypress	CY7C235-30C	★4006 3817-66
		CY7C235-40C	★4006 3817-81
		CY7C235-40M	★4006 3817-82
7C245	Cypress	CY7C245-18C	★4006 3818-63
		CY7C245-35C	★4006 3818-85
		CY7C245-45C	★4006 3818-106
		CY7C245-45M	★4006 3818-107
		CY7C245-45WC	★4006 3818-108
			(Continued)
7C245	Cypress	CY7C245-45WM	★4006 3818-109
7C261	Cypress	CY7C261-45C	★4006 3821-34
		CY7C261-55C	★4006 3821-43
		CY7C261-55M	★4006 3821-44
		CY7C261-65C	★4006 3821-56
		CY7C261-65M	★4006 3821-57
7C263	Cypress	CY7C263-40C	★4006 3821-31
		CY7C263-55C	★4006 3821-45
		CY7C263-55M	★4006 3821-46
		CY7C263-65C	★4006 3821-58
		CY7C263-65M	★4006 3821-59
7C264	Cypress	CY7C264-40C	★4006 3821-32
		CY7C264-55C	★4006 3821-47
		CY7C264-55M	★4006 3821-48
		CY7C264-65C	★4006 3821-60
		CY7C264-65M	★4006 3821-61
7C281	Cypress	CY7C281-30C	★4006 3817-64
		CY7C281-45C	★4006 3817-85
		CY7C281-45M	★4006 3817-86
7C282	Cypress	CY7C282-30C	★4006 3817-65
		CY7C282-45C	★4006 3817-87
		CY7C282-45M	★4006 3817-88
7C291	Cypress	CY7C291-25C	★4006 3818-72
		CY7C291-35C	★4006 3818-82
		CY7C291-35WC	★4006 3818-84
		CY7C291-50C	★4006 3818-121
		CY7C291-50M	★4006 3818-122
		CY7C291-50WC	★4006 3819-1
		CY7C291-50WM	★4006 3819-2
7C292	Cypress	CY7C292-25C	★4006 3818-73
		CY7C292-35C	★4006 3818-83
		CY7C292-50C	★4006 3818-123
		CY7C292-50M	★4006 3818-124
7C401	Cypress	CY7C401-10C	3809-53
		CY7C401-10M	3809-54
		CY7C401-15C	3809-70
		CY7C401-15M	3809-71
		CY7C401-5C	3809-46
		CY7C401-5M	3809-47
7C402	Cypress	CY7C402-10C	3809-94
		CY7C402-10M	3809-55
		CY7C402-15C	3809-103
		CY7C402-15M	3809-72
		CY7C402-5C	3809-87
		CY7C402-5M	3809-88
7C403	Cypress	CY7C403-10C	3809-56
		CY7C403-10M	3809-57
		CY7C403-15C	3809-73
		CY7C403-15M	3809-74
			(Continued)
7C403	Cypress	CY7C403-25C	3809-83
		CY7C403-25M	3809-84
		CY7C403-5C	3809-48
		CY7C403-5M	3809-49
7C404	Cypress	CY7C404-10C	3809-95
		CY7C404-10M	3809-58
		CY7C404-15C	3809-104
		CY7C404-15M	3809-75
		CY7C404-25C	3809-114
		CY7C404-25M	3809-115
		CY7C404-5C	3809-89
		CY7C404-5M	3809-90
7C510	Cypress	CY7C510	808-9
		CY7C510C	807-80
		CY7C510M	1449-13
7C516	Cypress	CY7C516	855-160
		CY7C516C	1449-18
		CY7C516M	1449-19
7C517	Cypress	CY7C517	855-161
		CY7C517C	1449-20
		CY7C517M	1449-21
7C543	Cypress	CY7C543	808-10
		CY7C543C	1449-14
		CY7C543M	1449-15
7C901	Cypress	CY7C901	844-81
		CY7C901-23C	1405-5
		CY7C901-27M	1405-6
		CY7C901-301C	1448-53
		CY7C901-31C	1405-7
		CY7C901-32M	1448-54 1411-14
		CY7C901-69C	1405-8
		CY7C901-88M	1448-129 1405-9
7C909	Cypress	CY7C909-30C	1448-141
		CY7C909-30M	1448-142
		CY7C909-40C	1448-143
		CY7C909-40M	1448-144
7C910	Cypress	CY7C910C	1462-98
		CY7C910M	1462-99
7C911	Cypress	CY7C911-30C	1448-145
		CY7C911-30M	1448-146
		CY7C911-40C	1448-147
		CY7C911-40M	1448-148
7M134	IDT	IDT7M134L-115	★4050 3843-31
		IDT7M134L-125B	★4050 3843-56
7M135	IDT	IDT7M135L-115	★4050 3845-113
		IDT7M135L-125B	★4050 3845-115
7M164	IDT	IDT7M164L-100	★4066 3847-60
		IDT7M164L-100B	★4066 3847-61
		IDT7M164L-60	★4066 3847-40
		IDT7M164L-70	★4066 3847-53
		IDT7M164L-70B	★4066 3847-54
		IDT7M164L-85	★4066 3847-58
		IDT7M164L-85B	★4066 3847-59
7M203	IDT	IDT7M203S-100	★1083 3810-49
		IDT7M203S-100B	★1083 3810-50
		IDT7M203S-140	★1083 3810-47
		IDT7M203S-140B	★1083 3810-48
		IDT7M203S-65	★1083
			(Continued)
7M203	IDT	IDT7M203S-65	3810-51
		IDT7M203S-65B	★1083 3810-52
7M204	IDT	IDT7M204S-100	★1083 3810-55
		IDT7M204S-100B	★1083 3810-56
		IDT7M204S-140	★1083 3810-53
		IDT7M204S-140B	★1083 3810-54
		IDT7M204S-65	★1083 3810-57
		IDT7M204S-65B	★1083 3810-58
7M464	Dense-Pac	DPS7M464	★4008 3844-118
		DPX7M464	★4008 3845-98
	IDT	IDT7M464S-100B	★4065 3845-96
		IDT7M464S-55	★4065 3845-53
		IDT7M464S-65B	★4065 3845-55
		IDT7M464S-85B	★4065 3845-93
7M624	IDT	IDT7M624L-60	★4060 3847-83 3847-98 3848-11
		IDT7M624L-70B	★4060 3847-85 3847-100 3848-13
		IDT7M624S-65	★4060 3847-84 3847-99 3848-12
		IDT7M624S-85B	★4060 3847-86 3847-101 3848-14
7M656	IDT	IDT7M656L-100B	★4063 3846-8
		IDT7M656L-55	★4063 3846-1
		IDT7M656L-65	★4063 3846-2
		IDT7M656L-65B	★4063 3846-3
		IDT7M656L-85	★4063 3846-4
		IDT7M656L-85B	★4063 3846-5
7M812	IDT	IDT7M812L-60	★4061 3847-75
		IDT7M812L-70B	★4061 3847-76
7M856	IDT	IDT7M856S-100B	★4062 3846-48
		IDT7M856S-60	★4062 3846-39
		IDT7M856S-70	★4062 3846-40
		IDT7M856S-75B	★4062 3846-41
		IDT7M856S-85	★4062 3846-43
			(Continued)

Arranged alphanumerically from left to right.

PART NUMBER INDEX

Base Number	Source	Device	Page-Line
7M856	**IDT**	**IDT7M856S-90B**	★**4062** 3846-45
7M864	**IDT**	**IDT7M864L-120**	★**4064** 3843-50
		IDT7M864L-120B	★**4064** 3843-51
		IDT7M864L-150	★**4064** 3843-78
		IDT7M864L-150B	★**4064** 3843-79
		IDT7M864L-200	★**4064** 3843-95
		IDT7M864L-200B	★**4064** 3843-96
		IDT7M864L-65	★**4064** 3842-135
		IDT7M864L-75	★**4064** 3843-6
		IDT7M864L-75B	★**4064** 3843-7
		IDT7M864L-85	★**4064** 3843-10
		IDT7M864L-85B	★**4064** 3843-12
7M912	**IDT**	**IDT7M912L-60**	★**4067** 3847-78
		IDT7M912L-70B	★**4067** 3847-79
8	**AMD**	**AMPALR8ALM**	4470-76
	Burr-Brown	**MPC8D**	★**3149** 2831-29
		MPC8S	★**3149** 2830-172
	Chrislin	CI-MIV8	2038-5
	Cromemco	8PIO	2038-22
	Datel	**ADC-EK8B**	★**3161** 2835-41
		ADC-ET8BC	★**3161** 2835-44
		ADC-MC8BC	★**3161** 2837-43
		DAC-HF8BMM	★**3160** ★**3162** 2851-42
		DAC-IC8BC	★**3162** 2852-54
		DAC-UP8BC	★**3162** 2853-28
		DAC-UP8BM	★**3162** 2853-29
		HDAS-8MC	★**3160** ★**3163** 2840-19 ★**3160** ★**3163** 3399-3
		HDAS-8MM	★**3160** ★**3163** 3399-4
	DistComp	DCS/IWW/8B	2011-25
	Fairchild	F8	¶ 363-14
	IndComp	ZPM-8	2013-9
	Intech	RGBDAC8E	2855-25 1466-38
		RGBDAC8T	2855-26 1466-39
	IntSolutions	VM-ICP8	2044-27
	IMI	MPY-8	843-27
	LMS	**NVR8**	★**4100** 3813-76
		NVRD8	3813-102 3826-2 3843-82
	LogicDev	LMU8U	843-31
		LMU8UC	807-92
			(Continued)
8	LogicDev	LMU8UM	807-93
	Matrix	RLK8	1817-12
	Matrox	MBC-8b/512B	2025-13
	National	IMP-8	¶ 365-1
		IMP-8C	¶ 367-10 ¶ 378-12
	WinSystems	LPM-D/A8	2040-20
		MCM-D/A8	2039-48
	Zilog	Z8	¶ 369-18 ¶ 376-18
80	Acco	S80 I/M	2036-34
		S80 MEM	2036-29
		S80 OUTPUT	2036-27
	Ampro	LittleBoard/80	2015-16
	AD	ADADC80-12	2841-40
		ADADC80-15	2838-39
		ADADC80Z-10	2838-40
		ADADC80Z-12	2841-41
		ADDAC80	¶ 386-12
		ADDAC80/CBI	★**3107** 2862-27
		ADDAC80/CCD	★**3107** 2869-43
	AppBusComp	CRT-80	2031-8
	ApplSys	ACS/80	2019-17
	Bedford	MCS80-0013	2007-39
	Burr-Brown	**ADC80A-10**	★**3146** 2845-42
		ADC80A-12	★**3146** 2841-46
		DAC80-CBI-I	★**3147** 2862-24
		DAC80-CBI-V	★**3147** 2865-15
		DAC80-CCD-I	★**3147** 2870-1
		DAC80Z-CBI-I	★**3147** 2862-16
		DAC80Z-CBI-V	★**3147** 2865-16
		DAC80Z-CCD-I	★**3147** 2870-2
		SHC80	★**3148** 3403-176
	Comark	MT80	2034-38
	Datricon	ACS-80	2017-22
	DistComp	DCS/80	1813-4
	DiversTech	CBC80C/24	2009-15
	EMM-SESCO	SECS80/10A	2011-5
		SECS80/30	2011-14
		SECS80/544	2011-15
		SECS80/86	2025-8
	Harris	**Z80**	★**1619**
	HybridSys	HSDAC80CBI-I	2864-4
		HSDAC80CBI-V	2864-18
	Intel	PL/M-80	¶ 375-6
		iSBC80/10B	2011-3 ¶ 385-13
		iSBC80/20-4	¶ 385-13
		iSBC80/24	2011-7 ¶ 385-13
		iSBC80/30	2011-6 ¶ 385-13
		iSBC80/40	¶ 385-13
	Intelicom	CMOS-Z80/800	2042-46
	Interdesign	ULA80DS	4444-32
	Matrix	MF80	2015-37
	Matrox	PBC-80	2009-27
		ZBC-80	2009-24
	MCE	MCE80	3354-53
	MicroNet	**DAC80**	★**3204** 2864-41
		MNADC80	★**3203** 2841-45
	Mostek	Z80	¶ 383-14
	National	ADC80	¶ 387-2
		Z80A	¶ 371-9
	RCA	MB80C	2009-2
		MB80N	2009-3
	RELMS	RSBC-Z80/32	2009-20
		RSBC-Z80SP	2009-32
		Z80SAM	2009-19
	SGS	Z80A-CPU	1460-70
		Z80A-CTC	1460-93
		Z80A-DART	1461-18
		Z80A-DMA	1460-110
			(Continued)
80	SGS	Z80A-PIO	1460-124
		Z80A-SIO	1460-138
	SingleBoard	SBS-80	2005-6
	TeledyneP	TPDAC80I	2859-87
		TPDAC80V	2861-18
	TI	Z80	¶ 440-21
	VersaLogic	VID-80	2039-30
	Wintek	**MDS80**	★**2118** 2037-16
	Zendex	ZX80/15	2011-18
	Ziatech	ZT 80	2034-29
	Zilog	Z80	1460-76 ¶ 374-5 ¶ 374-14 ¶ 375-16 ¶ 375-17 ¶ 376-3 ¶ 376-4 ¶ 383-15 1433-2
		Z80A	1460-77 ¶ 377-3 ¶ 377-5 1433-3
		Z80A-DMA	1460-114
		Z80A-SIO	¶ 377-5
		Z80B	1460-78 1433-4
		Z80L	1460-79 1433-5
		Z80MCB/16	2013-6
		Z80MCB/4	2013-7
800	**Burr-Brown**	**DAC800-CBI-I**	★**3147** 2862-19
		DAC800-CBI-V	★**3147** 2862-20
		MPC800K	★**3149** 2831-27
		MPC800S	★**3149** 2831-28
	Datel	**ADC-800**	★**3158**
	Dexter	DR800	2009-14
	Fujitsu	**C800AVB**	★**4624** 4444-46
	Harris	**NSC800**	★**1619**
	Hitachi	TBA800	3316-192
	Matrox	MSBX-800	2032-41
	Miller	MCPU-800	2017-4
	Motorola	**MCA800ECL**	★**4718** 4451-38
	National	NSC800	1460-24 ¶ 368-13 ¶ 369-16 1427-2
		NSC800-1	1460-26 1427-3
		NSC800-4	1460-27 1427-4
	Onset	CPU-800A	2007-3
		MOR-800	2030-6
	SGS	TBA800	3316-220
	Signetics	**DAC800V**	★**3689** ★**3725** 2862-23
	SMC	MPU800	1460-25 1431-3
		MPU800-1	1460-28 1431-4
		MPU800-4	1460-29 1431-5
	TeledyneS	TSC800C	2846-39
	Telefunken	TBA800	3318-16
	ThomsonCSF	TBA800	3318-21
	Unitrode	PIC800	3397-37
	Vatic	**VL800**	★**4804** 4465-21
	VTC	**VJ800**	★**4818** 4465-22 ¶ 444-17
	Wintek	**MP800**	★**2118**
	Zilog	Z800	1461-24 ¶ 383-15
8000	CIC	GAC-8000	4441-46
	Fujitsu	**C8000AV**	★**4624** 4445-11
		C8000VH	★**4624**
			(Continued)
8000	Fujitsu	C8000VH	4444-39
	GouldAMI	**GB8000D**	★**4632** 4446-24
	Holt	HI8000	1468-35
	Honeywell	HE8000	4447-21
	Mostek	GB8000D	4451-30
		MKGB8000D	★**4716** 4451-31
	National	DM8000	¶ 431-7
		Z8000	¶ 371-9
	Plessey	SP8000 Series	¶ 415-17
	Signetics	**MEA8000**	★**3700** ★**3728** 3323-126
		OM8000	★**3728**
	SingleBoard	MBX8000	2027-30
	TI	TAC8000VH	4456-20
		Z8000	¶ 440-21
	Zilog	Z8000	1463-17 ¶ 368-4 ¶ 368-14 ¶ 369-1 ¶ 370-6 ¶ 375-2 ¶ 375-14 ¶ 376-5 ¶ 377-7 ¶ 383-3 ¶ 383-12 ¶ 383-16 ¶ 383-17 ¶ 383-18
80000	Zilog	Z80000	1465-12
8001	AMD	AmZ8001	¶ 378-16
		Z8001	1463-13 1433-34
		Z8001A	1463-14
		Z8001A-8	1463-15
	MonSys	MSC8001	2009-28
	SEEQ	8001	¶ 371-14 ¶ 378-13 ¶ 379-14
	SGS	Z8001	1463-16
	Sharp	LH8001	1463-76 1437-4
		LH8001A	1463-77 1437-5
	Signetics	DAC8001	2862-22
		OM8001	★**3728**
	SingleBoard	MBX8001	2023-35
	Zilog	Z8001	1463-18 ¶ 369-5 1437-24
		Z8001A	1463-19 1437-25
		Z8001B	1463-20 1437-26
		Z8001DM	2025-25
8002	AMD	Z8002	1463-6 1433-35
		Z8002A	1463-7
		Z8002A-8	1463-8
	SEEQ	8002	¶ 371-14 ¶ 379-14 ¶ 412-9
	SGS	Z8002	1463-9
	Sharp	LH8002	1463-74 1437-6
		LH8002A	1463-75 1437-7
	SingleBoard	MBX8002	2023-37
	SSS	SND8002	1466-30
	SMC	CRT8002	3808-17 ¶ 363-11 ¶ 365-16 ¶ 383-8 1466-31
	Zilog	Z8002	1463-10 ¶ 377-3 ¶ 385-12 1437-27
		Z8002A	1463-11 1437-28
		Z8002B	1463-12
			(Continued)

¶ Indicates page number in Application Note Directory.
★ Indicates additional data is provided on the page noted.

Base Number	Source	Device	Page-Line
8002	Zilog	Z8002B	1437-29
		Z8002DM	2025-26
8003	Century	V8003	2021-33
	SEEQ	8003	1466-98
			¶ 371-14
			¶ 378-13
			¶ 379-14
	Zilog	Z8003	1463-21
			1437-30
		Z8003A	1463-22
		Z8003B	1463-23
8004	Century	V8004	2035-56
	MonSys	MSC8004	2009-29
		MSC8004A	2009-30
	SMC	COM8004	2878-2
			¶ 383-5
	Zilog	Z8004	1463-24
			1437-31
		Z8004A	1463-25
		Z8004B	1463-26
8006	Century	V8006	2036-9
8007	Century	V8007	2036-6
	Intersil	**ICL8007**	**★3600**
			★3601
			3345-28
			¶ 408-3
		ICL8007AC	**★3600**
			★3601
			3332-31
			3357-166
		ICL8007AM	**★3600**
			★3601
			3332-32
			3357-167
		ICL8007C	**★3600**
			★3601
			3357-175
		ICL8007M	**★3600**
			★3601
			3357-141
	MonSys	MSC8007/A	2009-31
8009	Century	V8009	2036-18
800 Model 4			
	Gerber	PC800 Model 4	4917-3
			4987-1
			5052-49
801	Burr-Brown	MP801	2035-50
		MPC801K	**★3149**
			2830-64
		MPC801S	**★3149**
			2830-65
	Harris	HIDAC801	2862-31
	Onset	CPU-801	2007-4
	Unitrode	PIC801	3397-38
8010	DistComp	DCS8010A	2011-4
	Holt	HI8010	2874-93
	MicroSys	SB8010	2015-41
	SGS	Z8010-MMU	1463-68
	Sharp	LH8010	1463-69
		LH8010A	1463-70
	Siemens	SDA8010	844-13
	Signetics	**OM8010**	**★3701**
			★3728
			3323-108
	Zilog	Z8010	¶ 369-5
		Z8010-MMU	¶ 377-8
		Z8010-Z-MMU	1463-71
		Z8010A-Z-MMU	1463-72
		Z8010B-Z-MMU	1463-73
8011	**Signetics**	**OM8011**	**★3701**
			★3728
			3323-109
8012	Century	V8012	2036-46
	PMI	**DAC-8012**	**★3637**
			2861-22
8013	Intersil	ICL8013C	3400-130
		ICL8013M	3400-131
80130	Intel	80130	1461-34
8014	Analogic	MP8014	2846-23
	MonSys	MSC8014	2009-33
8015	Analogic	MP8015	2846-36
	Sanyo	LB8015	891-115
	Zilog	Z8015-Z-PMMU	1463-78
8016	AMD	AMZ8016	1463-45
		AMZ8016A	1463-46
			(Continued)
8016	Analogic	MP8016	2846-47
	Intech	A8016	2846-46
		A8016-10	2846-44
		A8016-16	2846-45
		A8016-8	2846-43
	Zilog	Z8016	¶ 384-1
		Z8016-Z-DTC	1463-47
8017	MonSys	MSC8017	2009-34
	SMC	COM8017	2901-60
8018	**Intersil**	**ICL8018AC**	**★3200**
			3404-115
		ICL8018AM	**★3200**
			3404-116
	SMC	COM8018	2901-61
80186	AMD	80186-1	1461-69
		80186-3	1461-70
		80186-6	1461-71
	Fujitsu	**MBL80186**	**★1611**
			1461-59
			1435-7
		MBL80186-6	**★1611**
			1461-60
			1435-8
	Intel	80186	1461-61
			1435-20
80188	AMD	80188-1	1461-65
		80188-3	1461-66
		80188-6	1461-67
	Fujitsu	**MBL80188**	**★1611**
			1417-3
		MBL80188-6	**★1611**
			1417-4
	Intel	80188	1461-68
			1435-21
8019	**Intersil**	**ICL8019AC**	**★3200**
			3404-117
		ICL8019AM	**★3200**
			3404-118
802	Burr-Brown	MP802	2035-51
	CTI	MA802	3381-23
	SBE	802	1821-8
8020	Intel	8020H	1456-101
	Intersil	**ICL8020AC**	**★3200**
			3404-119
		ICL8020AM	**★3200**
			3404-120
	MicroSys	SB8020	2017-3
	Siliconix	**SI8020A**	**★3249**
			★3258
			2868-41
		SI8020C	**★3249**
			★3258
			2868-42
8021	Intel	8021	¶ 365-15
		8021H	1456-102
			1421-3
	Intersil	**ICL8021C**	**★3600**
			★3604
			3347-21
			3334-40
		ICL8021M	**★3600**
			★3604
			3347-22
			3334-41
	Signetics	8021	1429-35
	Siliconix	**SI8021A**	**★3249**
			★3258
			2867-29
		SI8021C	**★3249**
			★3258
			2867-30
	SMC	CRT8021	1466-22
		CRT8021-003	1466-23
8022	Intel	8022	1456-103
			¶ 365-15
	Intersil	**ICL8022C**	**★3600**
			3334-49
			3366-48
		ICL8022M	**★3600**
			3334-50
			3363-51
	Toshiba	BM8022	1821-25
		TMP8022	1456-104
8023	**Intersil**	**ICL8023C**	**★3600**
			3334-54
		ICL8023M	**★3600**
			(Continued)
8023	Intersil	ICL8023M	3334-55
	SEEQ	8023A	1466-102
8024	Holt	HI8024	1468-38
80286	AMD	80286-1	1464-69
		80286-6	1464-70
		80286-8	1464-71
	Fujitsu	**MBL80286-4**	**★1611**
			1462-14
			1435-9
		MBL80286-6	**★1611**
			1462-15
			1435-10
		MBL80286-8	**★1611**
			1462-16
			1435-11
	Intel	80286	1461-41
			1435-22
80287	Intel	80287	1461-33
803	**Burr-Brown**	**ADC803B**	**★3146**
			2839-36
		ADC803C	**★3146**
			2843-10
		ADC803S	**★3146**
			2839-37
		SHC803	**★3148**
			3403-177
	CTI	MA803	3379-89
	Dionics	DI803A	2877-28
	NEC	μPC803	3368-43
	Sharp	SM803	1429-31
8030	AMD	Z8030	1463-79
		Z8030A	1463-80
	Holt	HI-8030	2874-92
		HI8030	2876-45
	SGS	Z8030-SCC	1463-81
	Sharp	LH8030	1463-84
		LH8030A	1463-85
	Zilog	Z8030	¶ 371-11
			¶ 381-12
			¶ 383-3
			¶ 384-2
		Z8030-Z-SCC	1463-82
		Z8030A-Z-SCC	1463-83
8031	AMD	8031AH	1457-37
		8031AH-15	1457-38
		Z8031	1463-28
		Z8031A	1463-29
	Fujitsu	**MBL8031**	**★1611**
			1457-39
			1417-5
	Holt	HI8031	2876-98
	Intel	8031	¶ 380-4
		8031AH	1457-40
			1421-4
	SGS	Z8031	1463-30
	Siemens	8031	1457-43
	Signetics	**SCN8031**	**★1714**
			1457-45
	Zilog	Z8031-Z-ASCC	1463-31
			1465-28
8032	Intel	8032	1421-5
8034	SGS	Z8034-UPC	1463-87
8035	**Fujitsu**	**MBL8035**	**★1611**
			1456-13
			1417-6
	Intel	8035	¶ 365-15
		8035AHL	1456-16
			1421-6
		M8035HL	1421-22
		M8035L	1456-24
	National	INS8035	1456-27
			1425-30
		INS8035L	1456-28
			1425-31
	NEC	μPD8035L	1456-33
			1427-21
	Signetics	8035	1429-36
		SCN8035A	**★1712**
			1456-43
	Toshiba	**TMP8035**	**★1750**
			1456-46
			1431-24
8036	AMD	Z8036	1463-35
		Z8036A	1463-36
	SGS	Z8036-CIO	1463-37
	Sharp	LH8036	1463-38
			(Continued)
8036	Sharp	LH8036A	1463-39
	Zilog	Z8036	¶ 365-12
			¶ 371-11
		Z8036-Z-CIO	1463-40
		Z8036A-Z-CIO	1463-41
8037	Analogic	MP8037	2847-32
8038	AMD	Z8038	1463-52
	Exar	**XR8038**	**★3554**
			3376-40
		XR8038A	**★3554**
			3376-41
		XR8038M	**★3554**
			3376-42
	Intersil	ICL8038	¶ 421-7
		ICL8038C	**★3604**
			3376-43
		ICL8038M	**★3604**
			3376-44
	SGS	Z8038-FIO	1463-53
	Sharp	LH8038	1463-54
		LH8038A	1463-55
	Zilog	Z8038	¶ 367-14
			¶ 371-11
			¶ 377-15
		Z8038-Z-FIO	**★1776**
			1463-56
		Z8038A-FIO	**★1776**
			1463-57
8039	**Fujitsu**	**MBL8039**	**★1611**
			1456-14
			1417-7
	Intel	8039	¶ 365-15
		8039AHL	1456-17
			1421-7
		8039HL	1456-18
		M8039HL	1421-23
	National	INS8039	1456-29
			1425-32
		INS8039L	1456-30
			1425-33
	NEC	μPD8039L	1456-34
			1427-22
	Signetics	8039	1429-37
		SCN8039A	**★1712**
			1456-44
	Toshiba	**TMP8039**	**★1750**
			1456-47
			1431-25
		TMP8039-6	**★1750**
			1456-48
804	**Burr-Brown**	**ADC804**	**★3146**
			2843-49
		ADC804S	**★3146**
			2841-32
		SHC804	**★3148**
			3403-178
	Century	VM804	2036-10
	Dionics	DI804A	2877-29
	National	CIM804	¶ 374-4
8040	Intel	8040AHL	1456-19
			1421-8
	National	INS8040	1456-31
			1425-34
		INS8040L	1456-32
			1425-35
	Rockwell	R8040	3382-48
			¶ 413-12
	Signetics	8040	1429-38
		SCN8040	**★1712**
			1456-45
8041	**Fujitsu**	**MBL8041A**	**★1611**
			1457-17
			1457-269
			1457-429
	Intel	8041	¶ 365-15
			¶ 375-1
		8041A	1457-430
		8041AH	1457-18
			1457-270
			1468-68
		8041AH-2	1457-19
			1457-271
	NEC	μPD8041	1457-26
			1457-274
			1457-432
		μPD8041A	1457-27

Arranged alphanumerically from left to right.

PART NUMBER INDEX

Base Number	Source	Device	Page-Line
8042	**Fujitsu**	**MBL8042**	★**1611**
	Intel	8042	1457-20
			1468-70
8043	**Intersil**	**ICL8043C**	★**3600**
			★**3601**
			3369-1
		ICL8043M	★**3600**
			★**3601**
			3368-59
8044	Intel	8044	1457-31
			1468-72
8046	SMC	COM8046	890-18
			¶ 363-11
			2900-26
		COM8046T	890-19
			2900-27
8048	**Fujitsu**	**MBL8048**	★**1611**
			1456-54
			1417-8
	Intel	8048	1456-56
			¶ 365-15
			¶ 375-1
		8048AH	1456-57
			1421-9
		8048H	1456-58
		M8048H	1456-67
	Intersil	ICL8048	¶ 409-19
		ICL8048C	★**3602**
			3307-13
	National	8048	¶ 371-20
		INS8048	1456-74
			¶ 370-16
			1425-36
		INS8048L	1456-75
			1425-37
	NEC	µPD8048	1456-80
			1427-23
	Signetics	8048	1429-39
		SCN8048A	★**1712**
			1456-89
	Toshiba	**TMP8048**	★**1750**
			1456-92
			1431-26
8049	Intel	8049	¶ 365-15
			¶ 366-15
		8049AH	1456-59
			1421-10
		8049H	1456-60
		8049HL	1456-61
		M8049H	1456-68
	Intersil	ICL8049	¶ 409-19
		ICL8049C	★**3602**
			3307-8
	National	INS8049	1456-76
			1425-38
		INS8049L	1456-77
			1425-39
	NEC	µPD8049	1456-81
			1427-24
	Signetics	8049	1429-40
		SCN8049A	★**1712**
			1456-90
	Toshiba	**TMP8049**	★**1750**
			1456-93
			1431-27
		TMP8049-6	★**1750**
			1456-94
805	**Citel**	**MA805**	★**3155**
	Dionics	DI805A	2877-30
	TeledyneS	TSC805	2848-41
8050	Intel	8050AH	1456-62
			1421-11
	National	ANS8050	¶ 371-20
		INS8050	1456-78
			1425-40
		INS8050L	1456-79
			1425-41
		NS8050	¶ 372-1
	Rockwell	R8050	3381-21
			¶ 413-12
	Signetics	8050	1429-41
		SCN8050A	★**1712**
			1456-91
8051	**Fujitsu**	**MBL8051**	★**1611**
			1457-46
			1417-9
			(Continued)
8051	Intel	8051	¶ 380-4
		8051AH	1457-47
			1421-12
	Intersil	IM8051	1457-51
	Siemens	8051	1457-54
	Signetics	**SCN8051**	★**1714**
			1457-56
	Xicor	8051	¶ 432-18
	Zilog	8051	¶ 368-5
8052	AMD	AM8052	1463-42
	Intel	8052	1457-48
			1421-13
	Intersil	**ICL8052**	★**3199**
			2848-45
			¶ 393-8
		ICL8052A	★**3199**
			2846-12
			2846-32
			2847-31
8053	Intersil	ICL8053	2848-46
		ICL8053A	2848-62
8060	National	INS8060	1460-11
			¶ 364-8
			¶ 366-4
	Rockwell	R8060	3381-19
			¶ 413-12
	SGS	Z8060-FIFO	1463-48
	Sharp	LH8060	1463-49
		LH8060A	1463-50
	Zilog	**Z8060-Z-FIFO**	★**1774**
			1463-51
8063	**Intersil**	**ICL8063C**	★**3602**
			3316-180
		ICL8063M	★**3602**
			3316-181
8064	MicronTech	MT8064-12	3828-29
		MT8064-15	3828-36
		MT8064-20	3828-41
8065	AMD	AMZ8065	1463-32
			1469-102
	MicronTech	MT8065	3828-28
			3828-35
			3828-40
	Zilog	Z8065-Z-BEP	1463-33
8068	AMD	AMZ8068	1463-43
	Intersil	**ICL8068**	★**3199**
			2848-47
			¶ 393-8
		ICL8068A	★**3199**
			2848-63
	Zilog	Z8068-Z-DCP	1463-44
80686	**Harris**	**MC80686**	★**1631**
		MD80686	★**1631**
8069	AD	ICL8069	¶ 427-14
	Intersil	**ICL8069**	★**3604**
			3402-22
		ICL8069M	★**3604**
			3402-23
	Maxim	ICL8069	3402-24
		ICL8069M	3402-25
807	**Datel**	**MVD-807**	★**3163**
			2831-1
		MXD-807	★**3163**
			2831-30
	Octagon	807	2040-27
8070	Rockwell	R8070	3382-49
	Zilog	Z8070-Z-APU	1461-23
			1463-27
			1465-13
8071	Sanyo	LM8071	3321-9
8073	National	INS8073	1456-100
808	**Datel**	**MV-808**	★**3163**
			2830-106
		MX-808	★**3163**
			2830-174
		MX-808M	★**3163**
			2830-175
	Motorola	MHW808A	3307-129
	PMI	DAC-808A	1469-43
		DAC-808B	1469-44
		DAC-808E	1469-45
		DAC-808F	1469-46
		DAC-808G	1469-47
8080	AMD	8080A	1457-61
			1411-25
		8080A-1	1457-62
			(Continued)
8080	AMD	8080A-2	1457-63
	Intel	8080	¶ 364-11
			¶ 375-6
		8080A	1457-66
			¶ 365-3
			¶ 373-15
			1421-14
		8080A-1	1457-67
		8080A-2	1457-68
		M8080A	1457-69
	LSILogic	**LL8080**	★**4676**
			4449-43
	National	INS8080A	1457-70
			¶ 363-10
			¶ 380-16
			¶ 387-16
			¶ 437-19
			¶ 439-13
		INS8080A-1	1457-71
		INS8080A-2	1457-72
	PMI	8080	¶ 388-16
	TI	TMS8080	¶ 381-17
		TMS8080A	¶ 382-3
8085	AMD	8085A	1457-281
			1411-26
		8085A-1	1457-282
		8085A-2	1457-283
		8085AH	1457-284
		8085AH-1	1457-285
		8085AH-2	1457-286
	Intel	8085	¶ 380-5
		8085A	¶ 365-3
			¶ 367-15
			¶ 373-15
		8085AH	1457-289
			1421-15
		8085AH-2	1457-290
		M8085A	1457-291
		M8085AH	1457-292
	NEC	µPD8085A-2	1457-294
			1427-25
		µPD8085AH	1457-295
	Onset	CPU-8085	2007-6
	SMC	8085	¶ 363-11
	Toshiba	**TMP8085A**	★**1750**
			1457-297
			1431-28
		TMP8085A-2	★**1750**
			1431-29
8086	AMD	8086	1461-35
			1433-32
		8086-1	1461-36
		8086-2	1461-37
	Chrislin	CI-8086+	2036-47
	Fujitsu	**MBL8086**	★**1611**
			1461-38
			1435-12
		MBL8086-1	★**1611**
			1461-39
			1435-13
		MBL8086-2	★**1611**
			1461-40
			1435-14
	Intel	8086	1461-42
			¶ 367-15
			1435-23
		8086-1	1461-43
		8086-2	1461-44
		M8086	1461-45
	Mostek	MK8086	1435-29
	NEC	µPD8086	1461-46
		µPD8086-2	1461-47
			1437-3
	Siemens	SAB8086	1437-8
		SAB8086-1	1437-9
		SAB8086-2	1437-10
		SAB8086-4	1437-11
		SAB8086C	1461-48
8086¢2	Chrislin	CI-8086+2MB	2036-32
8087	Intel	8087-2	1435-24
8088	AMD	8088	1462-41
			1433-23
		8088-1	1462-42
		8088-2	1462-43
	Fujitsu	**MBL8088**	★**1611**
			1462-44
			(Continued)
8088	**Fujitsu**	**MBL8088-2**	★**1611**
			1462-45
	Intel	8088	1462-47
		8088-2	1462-48
	MicroSys	SB8088	2019-26
	NEC	µPD8088	1462-49
			1433-28
		µPD8088-2	1462-50
	Onset	CPU-8088	2007-7
	TI	8088	¶ 372-14
	WinSystems	LPM-8088-5	2019-12
		MCM-8088-5	2019-21
8089	AMD	8089	1461-62
		8089A-3	1433-24
	Fujitsu	**MBL8089**	★**1611**
			1461-63
	Intel	8089	1461-64
			1433-27
809	SBE	809	1821-9
8090	Sharp	LH8090	1463-64
		LH8090A	1463-65
	Zilog	Z8090-Z-UPC	1463-66
8093	National	DM8093	856-94
			¶ 361-11
8094	National	DM8094	856-119
			¶ 361-11
	Zilog	Z8094	1463-67
			1468-63
8095	National	DM8095	856-160
8096	Intel	8096	1463-91
	National	DM8096	857-189
8097	National	DM8097	856-161
8098	National	DM8098	857-190
80 System 2	Cromemco	Z80 System 2	1813-1
80 System 3	Cromemco	Z80 System 3	1813-2
80A35	Intel	80A35	1456-20
80A39	Intel	80A39	1456-21
80A48	Intel	80A48L	1456-63
80A49	Intel	80A49	1456-64
80C31	Intel	80C31	1457-41
			1421-16
		M80C31	1421-24
	Intersil	IM80C31	1457-42
	OKI	**MSM80C31**	★**4732**
	Signetics	**SCC80C31**	★**1716**
			1457-44
80C35	Intel	80C35	1456-22
	Intersil	**IM80C35**	★**1645**
			1456-25
			1421-29
	NEC	µPD80C35	1456-35
			1427-26
	OKI	**MSM80C35**	★**4732**
			1456-37
			1427-29
	Signetics	**SCC80C35**	★**1710**
			1456-40
	Toshiba	**TMP80C35A**	★**1750**
			1456-49
80C351	**Signetics**	**SCC80C351**	★**3733**
			1457-57
80C39	**Fujitsu**	**MBL80C39**	★**1611**
			1456-15
			1417-10
	Intel	80C39	1456-23
			1421-17
		M80C39	1421-25
	Intersil	**IM80C39**	★**1645**
			1456-26
			1421-30
	NEC	µPD80C39	1456-36
	OKI	**MSM80C39**	★**4732**
			1456-38
			1427-30
	Signetics	**SCC80C39**	★**1710**
			1456-41
	Toshiba	**TMP80C39A**	★**1750**
			1456-50
			1431-30
		TMP80C39A-6	★**1750**
			1456-51

¶ Indicates page number in Application Note Directory.
★ Indicates additional data is provided on the page noted.

Base Number	Source	Device	Page-Line
80C40	**OKI**	**MSM80C40**	**★4732**
			1456-39
	Signetics	**SCC80C40**	**★1710**
			1456-42
	Toshiba	**TMP80C40A**	**★1750**
			1456-52
		TMP80C40A-6	**★1750**
			1456-53
80C48	Intel	80C48	1456-65
	Intersil	**IM80C48**	**★1645**
			1456-69
			1421-31
	NEC	μPD80C48	1456-2
			1427-27
	OKI	**MSM80C48**	**★4732**
			1456-83
			1427-31
	Signetics	**SCC80C48**	**★1710**
			1456-86
	Toshiba	**TMP80C48A**	**★1750**
			1456-3
80C49	**Fujitsu**	**MBL80C49**	**★1611**
			1456-55
	Intel	80C49	1456-66
			1421-18
		M80C49	1421-26
	Intersil	**IM80C49**	**★1645**
			1456-70
			1421-32
	NEC	μPD80C49	1456-82
	OKI	**MSM80C49**	**★4732**
			1456-84
	Signetics	**SCC80C49**	**★1710**
			1456-87
	Toshiba	**TMP80C49A**	**★1750**
			1456-95
		TMP80C49A-6	**★1750**
			1456-96
80C50	**OKI**	**MSM80C50**	**★4732**
			1456-85
	Signetics	**SCC80C50**	**★1710**
			1456-88
	SiliconSys	**SSI80C50**	**★3737**
			3381-22
	Toshiba	**TMP80C50A**	**★1750**
			1456-97
		TMP80C50A-6	**★1750**
			1456-98
80C51	Intel	80C51	1457-49
			1421-19
		M80C51	1457-50
			1421-27
	Intersil	IM80C51	1457-52
	OKI	MCM80C51	1457-53
		MSM80C51	**★4732**
	Signetics	**SCC80C51**	**★1716**
			1457-55
80C58	OKI	MSM80C58	807-106
80C59	**OKI**	**MSM80C59**	**★4732**
80C60	**SiliconSys**	**SSI80C60**	**★3737**
			3381-20
80C85	Calmos	CA80C85B	1457-287
			1411-28
	Harris	**HS80C85RH**	**★ 624**
			★ 637
			1457-288
	OKI	**MSM80C85A**	**★4732**
			1457-296
			1427-32
80C86	**Harris**	**80C86**	**★ 682**
			★1618
			★1631
			★4029
			★4654
			1461-49
			¶ 369-8
			¶ 376-7
			¶ 376-8
			¶ 379-17
			★ 682
			★1618
			★1631
			★4029
			★4654
			1435-16
		MD80C86	**★4029**
			(Continued)
80C86	**OKI**	**MSM80C86**	**★4732**
			1461-50
80C88	**Harris**	**80C88**	**★1618**
			1462-46
	OKI	**MSM80C88**	**★4732**
			1462-51
80C95	National	MM80C95	809-110
80C96	National	MM80C96	811-94
80C97	National	MM80C97	809-111
80C98	National	MM80C98	811-95
81	PMI	SMP81E	3404-72
		SMP81F	3404-73
810	Burr-Brown	MP810	2035-46
		MP810-AC	2035-45
		MP810-DB	2035-47
		MP810-LV	2035-48
		MP810-NS	2035-49
	Datel	**ADC-810**	**★3160**
			★3161
			844-39
		ADC-810MC	**★3160**
			★3161
			2839-44
		ADC-810MM	**★3160**
			★3161
			2839-45
	Hitachi	TBA810	3316-193
	National	NSC810	1460-36
		NSC810-1	1460-37
		NSC810-4	1460-38
	SGS	TBA810	3316-221
			¶ 409-3
		TBA810CB	3320-40
	SMC	MPU810A	1460-39
		MPU810A-1	1460-40
		MPU810A-4	1460-41
	Telefunken	TBA810	3318-17
	TI	TL810M	3312-26
	ThomsonCSF	TBA810	3318-22
	Unitrode	PIC810	3397-39
8100	Holt	HI8100	4463-11
	Lambda	LAS8100	2894-23
			¶ 425-7
	National	MM8100	3377-158
8101	Lambda	LAS8101	2894-24
			¶ 425-2
8108	ETIMicro	8108	2011-8
	Zilog	Z8108	1461-22
			1433-6
810H8	SPI	SP810H8	4475-73
810L8	SPI	SP810L8	4475-74
811	**Burr-Brown**	**DAC811A**	**★3147**
			2864-5
		DAC811B	**★3147**
			2861-12
		DAC811J	**★3147**
			2865-10
		DAC811K	**★3147**
			2861-20
		DAC811R	**★3147**
			2864-6
		DAC811S	**★3147**
			2861-13
	Datel	**ADC-811MC**	**★3160**
			★3161
			2839-51
		ADC-811MM	**★3160**
			★3161
			2839-52
	NEC	μPC811	3346-145
	TI	TL811M	3314-9
	Unitrode	PIC811	3397-40
8116	Analogic	MP8116	2871-21
	GI	AY5-8116	2900-41
		AY5-8116T	2900-42
	SMC	COM8116	890-6
			2900-45
		COM8116T	890-7
			2900-46
8118	Fujitsu	MB8118-10	3826-43
		MB8118-12	3826-47
812	**Burr-Brown**	**DAC812B**	**★3146**
			2866-20
		DAC812C	**★3146**
			2861-47
			(Continued)
812	NEC	μPC812	3363-44
	Sharp	SM812	1429-32
8120	AMD	AM8120	1463-89
	MicroSys	SB8120	2042-6
		SB8120-16	2042-12
8121	AMD	AM8121	1463-90
	National	DM8121	880-17
8123	National	DM8123	879-74
81256	Fujitsu	MB81256-10	3828-90
			3843-102
		MB81256-12	3829-5
		MB81256-15	3829-39
81257	Fujitsu	MB81257-10	3828-91
		MB81257-12	3829-6
		MB81257-15	3829-40
8126	Sprague	ULN-8126	3396-121
		ULQ-8126	3396-127
		ULS-8126R	3396-128
	SMC	COM8126	890-20
			2900-28
		COM8126T	890-21
			2900-29
8127	AMD	AM8127	1463-34
8128	Fujitsu	MB8128-10	3838-4
		MB8128-15	3838-89
	MicronTech	MT8128	3828-66
			3828-67
			3828-68
812H6	SPI	SP812H6	4475-75
812L6	SPI	SP812L6	4475-76
813	NEC	μPC813	3346-146
	Sharp	SM813	1429-33
8130	GI	AY8130	¶ 417-18
	MicroSys	SB8130-128	2042-27
		SB8130-64	2042-24
	National	DM8130	854-154
	Sprague	ULN-8130A	3401-112
8131	National	DM8131	854-87
8136	GI	AY5-8136	2900-43
		AY5-8136T	2900-44
	National	DM8136	854-89
	SMC	COM8136	890-8
			2900-47
		COM8136T	890-9
			2900-48
8140	**LSILogic**	**LL8140**	**★4676**
			4450-6
81416	Fujitsu	MB81416-10	3826-94
		MB81416-12	3826-95
		MB81416-15	3826-100
8146	SMC	COM8146	890-22
			2900-30
		COM8146T	890-23
			2900-31
81461	Fujitsu	MB81461-12	3827-117
		MB81461-15	3828-1
81464	**Fujitsu**	**MB81464-10**	**★4019**
			3827-100
		MB81464-12	**★4019**
			3827-107
		MB81464-15	**★4019**
			3827-124
814H4	SPI	SP814H4	4475-77
814L4	SPI	SP814L4	4475-78
815	**Datel**	**ADC-815MC**	**★3160**
			★3161
			2833-30
		ADC-815MM	**★3160**
			★3161
			2833-31
	TeledyneS	TSC815	2848-39
8150	AMD	AM8150C	1465-82
	SGS	TDA8150	3308-29
8151	AMD	AM8151C	1465-86
8152	AMD	AM8152AC	1466-43
		AM8152AM	1466-44
8154	National	INS8154	1457-251
			1460-20
8155	AMD	8155	1459-53
			1457-403
		8155-2	1459-54
			1457-404
	Intel	8155	1459-58
			1457-409
		8155-2	1459-59
			1457-410
			(Continued)
8155	Intel	8155H	1459-60
		8155H-2	1457-1
		M8155	1457-413
		M8155H	1457-6
	NEC	μPD8155	1457-7
			1457-416
	OKI	MSM8155	1457-418
	Toshiba	**TMP8155**	**★1750**
			1457-10
8156	AMD	8156-2	1459-55
			1457-405
		8156H	1457-406
	Intel	8156	1457-2
			1457-411
		8156-2	1457-3
			1457-412
		8156H	1457-4
		8156H-2	1457-5
	NEC	μPD8156	1457-8
			1457-417
	SMC	COM8156	890-10
			2900-49
		COM8156T	890-11
			2900-50
	Toshiba	**TMP8156**	**★1750**
			1457-11
8157	AMD	AM8157	1466-41
8158	AMD	AM8158C	1466-55
8159	AMD	AM8159	1466-57
816	ACE	DPC-816	2023-5
	AD	ADADC816	2838-51
	Datel	**ADC-816**	**★3160**
			★3161
			844-37
		ADC-816MC	**★3160**
			★3161
			2838-6
		ADC-816MM	**★3160**
			★3161
			2838-7
	GTEMicro	**816**	**★1617**
8160	National	DM8160	854-81
	SGS	TDA8160	3323-6
	Sprague	ULN-8160	3396-122
		ULS-8160R	3396-129
8161	Sprague	ULN-8161M	3396-123
8162	SGS	TDA8162	3323-7
8163	AMD	AM8163	1463-86
	Sprague	ULN-8163	3395-64
		ULS-8163R	3395-65
8164	**Dense-Pac**	**DPS8164**	**★4008**
			3846-103
		DPX8164	**★4008**
			3847-62
8167	Fujitsu	MB8167A-45	3844-38
		MB8167A-55	3844-55
		MB8167A-70	3844-71
		MB8167A-70W	3844-72
		MBM8167A-85W	3844-86
8168	Fujitsu	MB8168-45	3841-92
		MB8168-70	3842-72
		MB8168-70W	3842-73
		MBM8168-85W	3842-91
	Sprague	ULN-8168M	3396-124
816C1	SPI	SP816C1	4475-116
816H2	SPI	SP816H2	4475-79
816L2	SPI	SP816L2	4475-80
816L8	SPI	SP816L8	4475-81
816R4	SPI	SP816R4	4475-82
816R6	SPI	SP816R6	4475-83
816R8	SPI	SP816R8	4475-84
817	**Datel**	**ADC-817**	**★3160**
			★3161
			844-40
		ADC-817MC	**★3160**
			★3161
			2839-40
		ADC-817MM	**★3160**
			★3161
			2839-41
8170	SGS	TDA8170	3326-145
8172	SGS	TDA8172	3326-146
8177	AMD	AM8177	1466-25
8180	**Hughes**	**HHGA8180**	**★ 683**
			4447-37
		HVGA8180	**★ 683**
			(Continued)

Arranged alphanumerically from left to right.

Base Number	Source	Device	Page-Line
8180	Hughes	HVGA8180	4447-36
	SGS	TDA8180	3325-108
8185	Intel	8185	1457-420
		8185-2	1457-421
		M8185	1457-422
8186	Intel	8186	2025-4
	MonSys	MSC8186	2025-5
8190	SGS	TDA8190	3326-61
8194	Sprague	ULN-8194A	3396-125
8195	Sprague	ULN-8195A	3396-126
81C258	Fujitsu	MB81C258-10	3828-81
		MB81C258-12	3828-104
		MB81C258-15	3829-29
81C28	Intel	81C28-200	3838-110
		81C28L-200	3838-111
81C466	Fujitsu	MB81C466-10	3827-98
		MB81C466-12	3827-104
		MB81C466-15	3827-119
81C55	Calmos	CA81C55	3834-11
	Harris	**HS81C55RH**	★ **626**
			1459-56
			1457-407
	OKI	**MSM81C55**	★ **4732**
			1457-9
			1457-419
81C56	**Harris**	**HS81C56RH**	★ **626**
			1459-57
			1457-408
81C67	Fujitsu	MB81C67-35	3844-13
		MB81C67-45	3844-26
81C68	Fujitsu	MB81C68-35	3841-17
		MB81C68-45	3841-55
		MB81C68A-25	3840-122
81C71	Fujitsu	MB81C71-45	3847-6
		MB81C71-55	3847-25
81C75	Fujitsu	MB81C75-35	3844-108
		MB81C75-45	3845-6
81C78	Fujitsu	MB81C78-45	3842-123
		MB81C78-55	3842-131
81C79	Fujitsu	MB81C79-45	3842-124
		MB81C79-55	3842-132
81C81	Fujitsu	MB81C81-55	3848-5
81C86	Fujitsu	MB81C86-55	3847-71
		MB81C86-70	3847-72
81LS95	AMD	AM81LS95	857-54
	National	DM81LS95	857-66
81LS96	AMD	AM81LS96	858-61
	National	DM81LS96	858-63
81LS97	AMD	AM81LS97	857-55
	National	DM81LS97	857-67
81LS98	AMD	AM81LS98	858-62
	National	DM81LS98	858-64
82	**Burr-Brown**	**ADC82A**	★ **3146**
			2846-42
		DAC82K	★ **3147**
			2852-51
		DAC82S	★ **3147**
			2852-50
	HybridSys	HSADC82	2834-23
	MCE	MCE82	3368-49
	PMI	RPT-82	3380-94
820	ITT	DF820	3378-42
	Motorola	**MVME820**	★ **2112**
	SGS	TBA820	3318-61
			¶ 409-4
		TBA820M	3318-62
	TI	TL820M	3313-44
	ThomsonCSF	TBA820	3318-84
8200	Holt	HI8200	4463-14
	MicroSys	PS8200	2041-60
	Raytheon	RC8200	881-162
		RM8200	881-163
	Signetics	**PCF8200**	★ **3701**
			★ **3728**
			★ **3733**
			3323-120
8201	Raytheon	RC8201	881-164
		RM8201	881-165
8202	Intel	8202	¶ 367-15
		8202A	2892-69
			1457-147
			1457-315
			1461-110
	National	INS8202	1457-116
	Raytheon	RC8202	882-164
			(Continued)
8202	Raytheon	RM8202	882-165
	Signetics	S8202	882-166
8203	GI	AY3-8203	¶ 415-12
	Intel	8203	2892-70
			¶ 438-12
			1457-148
			1457-316
			1461-111
	National	INS8203	1457-117
	Raytheon	RC8203	882-167
		RM8203	882-168
8204	Cherry	CS8204	3382-27
	Mitel	ML8204	¶ 411-16
	Samsung	ML8204	3382-38
8205	Cherry	CS8205	3382-28
	Exar	XRT8205	3382-29
	Intel	8205	2892-71
			1456-117
			1457-141
			1457-314
	Mitel	ML8205	¶ 411-16
8206	Intel	8206	2878-19
			1457-152
	Western	WD8206	2878-20
82062	Intel	82062	1468-82
8207	Intel	8207	1461-112
8208	Intel	8208	1461-113
	National	INS8208	1457-110
821	Burr-Brown	MP821-05	2035-43
		MP821-15	2035-44
	ITT	DF821	3378-43
	Motorola	**MVME821**	★ **2112**
8210	National	DM8210	¶ 359-12
8211	Intersil	ICL8211	¶ 426-2
		ICL8211C	★ **3604**
			3405-39
		ICL8211M	★ **3604**
			3405-40
8212	Intel	8212	1457-174
			¶ 364-11
		M8212	1457-175
	Intersil	ICL8212	¶ 426-2
		ICL8212C	★ **3604**
			3405-41
		ICL8212M	★ **3604**
			3405-42
	National	DP8212	1457-177
			1460-22
			¶ 380-16
		DP8212M	1457-178
		INS8212	1457-179
			1460-23
	NEC	μPB8212	1457-180
	PMI	DAC-8212	2861-23
8214	Intel	8214	1459-20
		M8214	1469-146
	National	DM8214	878-34
			¶ 361-11
8216	AMD	M8216	1457-94
	Intel	8216	1456-108
			1457-88
			1457-299
		M8216	1457-97
	National	DP8216	1457-103
			¶ 380-16
		DP8216M	1457-104
		INS8216	1457-111
	NEC	μPB8216	1456-110
			1457-113
			1457-301
8218	Intel	8218	1457-115
82188	Intel	82188	1461-94
8219	Intel	8219	1457-303
822	Analogic	AD/AM-822	2841-31
	ITT	DF822	3378-44
	Motorola	**MVME822**	★ **2112**
	Telefunken	U822	3375-97
		U822BS	890-77
8220	Cortex	Cortex8220R	2005-16
	LSILogic	**LL8220**	★ **4676**
			4450-12
8221	National	BLC-8221	¶ 385-2
8222	National	BLC-8222	¶ 385-2
8224	Intel	8224	1457-120
			¶ 364-11
		M8224	1457-121
			(Continued)
8224	National	DP8224	1457-122
			¶ 380-16
		INS8224	1457-123
82258	Intel	82258	1461-108
8226	AMD	M8226	1457-95
	Intel	8226	1456-109
			1457-89
			1457-300
		M8226	1457-98
	National	DP8226	1457-105
			¶ 380-16
		DP8226M	1457-106
		INS8226	1457-112
	NEC	μPB8226	1456-111
			1457-114
			1457-302
8228	Intel	8228	1457-260
			¶ 364-11
		M8228	1457-262
	National	DP8228	1457-263
			¶ 380-16
		DP8228M	1457-264
		INS8228	1457-267
	TI	TIM8228	1457-194
82284	**Fujitsu**	**MBL82284**	★ **1611**
			1461-55
	Intel	82284	1461-56
82288	AMD	82288	1461-51
	Fujitsu	**MBL82288**	★ **1611**
			1461-52
	Intel	82288	1461-53
823	ITT	DF823	3378-45
8230	MicroInds	BLC8230	2035-1
	National	DM8230	¶ 361-11
	Raytheon	RC8230	879-143
8231	AMD	AM8231	1457-80
	Intel	8231A	1457-82
			1469-76
		M8231A	1457-83
	Raytheon	RC8231	879-151
		RM8231	879-152
8232	AMD	AM8232	844-73
			1457-153
			1469-118
	Intel	8232	844-74
			1457-154
			1469-119
	Raytheon	RC8232	879-144
		RM8232	879-145
8233	Cortex	8233	2037-20
	Raytheon	RC8233	878-168
		RM8233	878-169
	Signetics	S8233	878-173
8234	Raytheon	RC8234	878-115
		RM8234	878-116
	Signetics	**N8234**	★ **1175**
			878-117
		S8234	878-118
8237	AMD	8237A	1457-350
		8237A-4	1457-351
		8237A-5	1457-352
	Intel	8237	1466-78
		8237A	1457-354
		8237A-4	1457-355
		8237A-5	1457-356
	NEC	μPD8237A-5	1457-359
	VTI	VL8237A	1466-81
8238	Intel	8238	1457-261
	National	DP8238	1457-265
			¶ 380-16
		DP8238M	1457-266
		INS8238	1457-268
	TI	TIM8238	1457-195
824	Analogic	AD/AM-824	2846-25
	Telefunken	U824	3375-98
8241	Motorola	MC8241	874-92
	Raytheon	RC8241	874-96
		RM8241	874-97
	Signetics	S8241	874-64
8242	Motorola	MC8242	874-157
	Raytheon	RC8242	874-158
		RM8242	874-159
	Signetics	**N8242**	★ **1175**
			874-160
			874-177
		S8242	874-178
8243	**Fujitsu**	**MBL8243**	★ **1611**
			1459-8
		MBL8243E	★ **1611**
			1457-164
		MBL8243N	★ **1611**
			1457-165
	Intel	8243	1459-10
			1457-168
			1457-329
			1468-66
		M8243	1459-11
	National	INS8243	1459-12
	NEC	μPD8243	1459-13
			1457-331
	Raytheon	RC8243	888-126
		RM8243	888-127
	Toshiba	**TMP8243**	★ **1750**
			1457-169
8244	National	INS8244	1457-187
8245	National	INS8245	1457-188
8246	National	INS8246	1457-189
8247	National	INS8247	1457-145
8248	National	INS8248	1457-146
	Siemens	SAB8248A	1461-103
825	Analogic	AD/AM-825	2846-37
	Datel	**ADC-825MC**	★ **3160**
			★ **3161**
			2833-40
		ADC-825MM	★ **3160**
			★ **3161**
			2833-41
8250	Motorola	MC8250	862-75
	National	DP8250	1457-84
		INS8250	2901-65
			¶ 363-10
			1457-85
			1460-16
	Raytheon	RC8250	862-76
		RM8250	862-77
	SGS	TDA8250	3327-100
	Signetics	S8250	862-78
	Western	WD8250	2900-16
82501	Intel	82501	1458-18
8251	AMD	8251	1457-197
			1457-341
		8251A	1459-21
	Intel	8251	2901-25
			¶ 364-11
			1456-1
		8251A	1459-22
			1457-199
			1457-342
		M8251A	1457-200
	National	INS8251	1457-202
			1460-17
			¶ 380-16
	NEC	μPD8251	1459-25
			1457-204
			1457-345
		μPD8251A	2901-26
			1459-26
			1457-205
			1457-346
		μPD8251AF	2901-27
			1459-27
	Raytheon	RC8251	862-126
	SMC	COM8251	¶ 363-11
		COM8251A	2901-29
			1457-213
	Toshiba	**TMP8251A**	★ **1750**
			1459-29
8252	Raytheon	RC8252	862-127
8253	AMD	8253	1459-40
			1457-230
		8253-2	1459-41
			1457-231
		8253-5	1457-382
	Intel	8253	1457-384
		8253-5	1457-385
		M8253	1457-387
	National	INS8253	1457-233
		INS8253-5	1457-234
			1457-389
	NEC	μPD8253-2	1459-42
			1457-235
			1457-390
			(Continued)

¶ Indicates page number in Application Note Directory.
★ Indicates additional data is provided on the page noted.

Base Number	Source	Device	Page-Line
8253	NEC	μPD8253-5	1459-43
			1457-236
			1457-391
	Toshiba	**TMP8253-5**	★**1750**
			1457-393
8254	Intel	8254	1457-386
	National	INS8254	1457-242
			1460-15
	UMC	UM8254	1457-394
8255	AMD	8255A	1459-45
			1457-238
		8255A-5	1459-46
			1457-239
			1457-395
	Intel	8255A	1459-47
			1457-240
			1468-7
		8255A-5	1457-396
		M8255A	1457-241
	National	INS8255	1457-243
			1460-19
			¶ 380-16
	NEC	μPD8255	1459-48
			1457-244
		μPD8255A-2	1457-279
		μPD8255A-5	1459-49
			1457-245
			1457-398
	OKI	MSM8255A	1457-246
	Toshiba	**TMP8255A-5**	★**1750**
			1457-400
8256	**Dense-Pac**	**DPS8256**	★**4008**
			3848-4
	Intel	8256	1457-192
			1461-120
	MicronTech	MT8256	3829-109
			3829-116
			3830-7
	Siemens	SAB8256A	1459-19
			1457-338
			1461-121
8257	Intel	8257	1457-217
			1457-364
			1466-79
			¶ 364-11
			¶ 365-3
		8257-5	1457-218
			1457-365
		M8257	1457-219
			1457-357
	MicronTech	MT8257	3829-108
			3829-115
			3830-6
	NEC	μPD8257	1457-221
			1457-367
		μPD8257-5	1457-222
			1457-368
82586	Intel	82586	1458-19
8259	AMD	8259A	1457-370
		8259A-2	1457-371
		8259A-8	1457-372
	Fujitsu	**MBL8259A**	★**1611**
			1461-126
	Intel	8259	1459-30
		8259-5	1459-31
		8259A	1459-32
			1457-223
			1457-374
			1461-127
		8259A-2	1459-33
			1457-224
			1457-375
			1458-10
		8259A-5	1458-11
		8259A-8	1459-34
			1457-225
			1457-376
		M8259A	1457-377
	National	INS8259	1457-226
	NEC	μPD8259	1459-35
			1457-227
			1457-379
		μPD8259-2	1459-36
			1457-228
			1457-380
	Siemens	SAB8259A	1461-129
			(Continued)
8259	Siemens	SAB8259A-2	1461-130
		SAB8259A-8	1461-131
	Toshiba	**TMP8259A**	★**1750**
			1459-38
	UMC	UM8259	1459-39
826	Analogic	AD/AM-826	2846-41
	Datel	**ADC-826MC**	★**3160**
			★**3161**
			★**3162**
			2838-14
		ADC-826MM	★**3160**
			★**3161**
			★**3162**
			2838-15
	TeledyneS	TSC826	2848-1
8260	Motorola	MC8260	855-15
	Raytheon	RC8260	855-16
		RM8260	855-17
8261	Motorola	MC8261	854-158
	Raytheon	RC8261	854-159
8262	Raytheon	RC8262	889-6
		RM8262	889-7
	Signetics	**N8262**	★**1175**
			889-10
		S8262	889-11
8263	Raytheon	RC8263	879-127
		RM8263	879-128
8264	Fujitsu	MB8264	¶ 438-3
		MB8264A-10	3827-11
		MB8264A-12	3827-24
		MB8264A-15	3827-46
		MB8264A-15W	3827-47
		MB8264A-20W	3827-74
	Raytheon	RC8264	879-129
		RM8264	879-130
8265	Fujitsu	MB8265A-10	3827-12
		MB8265A-12	3827-25
		MB8265A-15	3827-48
		MC8265	¶ 438-3
8266	Cortex	8266	2037-18
	Fujitsu	MB8266A	¶ 439-17
		MB8266A-10	3827-13
		MB8266A-12	3827-26
		MB8266A-15	3827-49
	Motorola	MC8266	878-73
	Raytheon	RC8266	878-74
		RM8266	878-75
	Signetics	**N8266**	★**1175**
			878-76
		S8266	878-77
8267	Motorola	MC8267	879-70
	Raytheon	RC8267	879-71
		RM8267	879-72
8268	Cortex	Cortex8268K	2005-17
827	**Datel**	**ADC-827MC**	★**3160**
			★**3162**
			2839-48
		ADC-827MM	★**3160**
			★**3162**
			2839-49
8270	Motorola	MC8270	881-88
			3854-40
	Raytheon	RC8270	881-89
			3854-42
		RM8270	881-90
			3854-44
	Signetics	S8270	867-77
			3854-36
8271	Intel	8271	1459-1
			1457-155
			1457-322
			1467-32
		8271-6	1459-2
	Motorola	MC8271	881-95
			3854-41
	Raytheon	RC8271	881-96
			3854-43
		RM8271	881-97
			3854-45
	Signetics	**N8271**	★**1175**
			881-98
			3854-35
		S8271	881-99
			3854-37
8272	Intel	8272A	1467-54
	UMC	UM8272A	1467-58
82720	Intel	82720	1465-91
8273	Intel	8273	1457-16
			1457-257
			1457-428
	Raytheon	RC8273	883-4
			3856-93
		RM8273	883-5
			3856-94
	Signetics	**N8273**	★**1173**
			883-6
			3856-95
		S8273	883-7
			3856-96
82730	Intel	82730	1461-139
			1466-9
82731	Intel	82731	1462-3
			1466-32
8274	Intel	8274	1457-259
			1469-40
	Raytheon	RC8274	883-1
			3856-90
		RM8274	883-2
			3856-91
	Signetics	**N8274**	★**1173**
			883-3
		S8274	3856-92
8275	Intel	8275	1456-114
			1457-124
			1457-306
			1465-99
			¶ 364-11
	MicroSys	SB8275	2015-19
	Western	WD8275	1465-100
8276	Intel	8276	1457-125
			1465-79
	MicroSys	SB8276	2041-37
	Western	WD8276	1465-75
8277	MicroSys	SB8277	2039-54
8278	MicroSys	SB8278	2039-53
8279	Cortex	8279	2037-21
	Intel	8279	1457-183
			1458-15
			¶ 364-11
		8279-5	1457-184
	NEC	μPD8279-5	1457-186
	Toshiba	**TMP8279**	★**1750**
828	Telefunken	U828	3326-86
8280	National	DM8280	860-110
	Raytheon	RC8280	860-111
		RM8280	860-113
	Signetics	S8280	860-115
8281	Motorola	MC8281	858-80
	National	DM8281	858-87
	Raytheon	RC8281	858-89
		RM8281	858-91
	Signetics	S8281	858-93
8282	**Fujitsu**	**MBL8282**	★**1611**
			1462-32
	Intel	8282	1462-34
		M8282	1462-35
	NEC	μPB8282	1462-37
	Siemens	SAB8282	1462-39
8283	**Fujitsu**	**MBL8283**	★**1611**
			1462-24
	Intel	8283	1462-26
		M8283	1462-27
	NEC	μPB8283	1462-29
	Siemens	SAB8283	1462-31
8284	AMD	8284A	1461-95
	Fujitsu	**MBL8284A**	★**1611**
			1461-96
	Intel	8284A	1461-97
		8284A-1	1461-98
		M8284	1461-99
	NEC	μPB8284A	1461-101
	Raytheon	RC8284	860-50
		RM8284	860-51
	Signetics	S8284	860-52
8285	Raytheon	RC8285	861-69
		RM8285	861-70
8286	AMD	8286	1462-13
	Fujitsu	**MBL8286**	★**1611**
			1462-17
	Intel	8286	1457-437
		M8286	1457-29
			1457-276
			(Continued)
8286	Intel	M8286	1457-434
			1462-19
	NEC	μPB8286	1462-21
	Siemens	SAB8286	1462-23
8287	AMD	8287	1462-5
	Fujitsu	**MBL8287**	★**1611**
			1462-6
	Intel	8287	1457-436
		M8287	1457-30
			1457-277
			1457-435
			1462-8
	NEC	μPB8287	1462-10
	Siemens	SAB8287	1462-12
8288	AMD	8288	1461-81
		AM8288	1461-83
	Fujitsu	**MBL8288**	★**1611**
			1461-84
	Intel	8288	1461-86
		8288-1	1461-93
		M8288	1461-87
	NEC	μPB8288	1461-89
	Siemens	SAB8288	1461-92
8289	AMD	AM8289	1461-73
	Fujitsu	**MBL8289**	★**1611**
			1461-74
	Intel	8289	1461-76
		M8289	1461-77
	NEC	μPB8289	1461-79
	Siemens	SAB8289	1461-80
82891	National	INS82891	1467-88
82893	National	INS82893	1467-89
8290	Raytheon	RC8290	860-112
		RM8290	860-114
8291	Intel	8291	1459-7
		8291A	1457-162
			1457-328
			1461-117
			1458-3
	National	DM8291	858-88
	Raytheon	RC8291	858-90
		RM8291	858-92
8292	Intel	8292	1457-160
			1457-326
			1467-93
8293	Intel	8293	1457-163
			1458-4
	Lambda	LAS8293D	3399-77
8294	Intel	8294	1457-138
			1469-115
	National	INS8294	1457-79
8295	Intel	8295	1468-10
			¶ 367-16
82A203	**Chips&Tech**	**82A203**	★**1604**
			1465-15
82A204	**Chips&Tech**	**82A204**	★**1604**
			1465-16
82A205	**Chips&Tech**	**82A205**	★**1604**
			1465-14
82AC51	S-MOS	SMC82AC51	1457-348
82C03	Intel	82C03	1457-149
			1457-317
82C06	National	INS82C06	1457-170
82C08	**Harris**	**HS82C08RH**	★ **634**
			1457-96
	National	MM82C08	886-112
82C100	SiliconSys	SSI82C100	4473-75
82C101	SiliconSys	SSI82C101	4473-74
82C12	Calmos	CA82C12	1457-278
			1457-438
			1462-40
	Harris	**HS82C12RH**	★ **635**
			1457-173
	OKI	**MSM82C12**	★**4732**
			1457-181
82C19	National	MM82C19	833-163
82C201	**Chips&Tech**	**82C201**	★**1604**
			1465-18
82C202	**Chips&Tech**	**82C202**	★**1604**
			1465-17
82C288	AMD	82C288	1461-82
82C339	**Harris**	**HPL82C339**	★**4655**
82C37	Calmos	CA82C37	1457-353
	Harris	**82C37**	★**1620**
			★**1627**
	OKI	**MSM82C37**	★**4732**
			(Continued)

Arranged alphanumerically from left to right.

Base Number	Source	Device	Page-Line
82C37	S-MOS	SMC82C37	1461-109
		SMC82C37AC	1457-360
		SMC82C37AC-4	1457-361
		SMC82C37AC-5	1457-362
	VTI	**VL82C37A**	★ **1751**
			★ **1752**
			★ **1767**
			1457-363
82C43	Fujitsu	MBL82C43	1459-9
	Intersil	**IM82C43I**	★ **1645**
			1457-166
		IM82C43M	★ **1645**
			1457-167
	NEC	μPD82C43	1459-14
			1457-332
	OKI	MCM82C43	1459-15
		MSM82C43	★ **4732**
	Toshiba	**TMP82C43**	★ **1750**
			1459-16
82C431	**Chips&Tech**	**82C431**	★ **1605**
			1465-90
82C432	**Chips&Tech**	**82C432**	★ **1605**
			1466-7
82C433	**Chips&Tech**	**82C433**	★ **1605**
			1465-66
82C434	**Chips&Tech**	**82C434**	★ **1605**
			1465-77
82C50	**Harris**	**82C50**	★ **1620**
			★ **1628**
			2900-15
			★ **1620**
			★ **1628**
			1461-72
	VTI	**VL82C50**	★ **1751**
			★ **1752**
			★ **1763**
			2901-68
			★ **1751**
			★ **1752**
			★ **1763**
			1457-86
			1460-18
		VL82C50A	★ **1751**
			★ **1752**
			★ **1763**
			2901-69
82C51	**OKI**	**MSM82C51A**	★ **4732**
			2901-28
			1459-28
			1457-206
			1457-347
	S-MOS	SMC82C51A	1457-207
			1457-349
82C52	**Harris**	**82C52**	★ **682**
			★ **1619**
			★ **1620**
			★ **1629**
			★ **1631**
			★ **4029**
			★ **4654**
			2901-73
			★ **682**
			★ **1619**
			★ **1620**
			★ **1629**
			★ **1631**
			★ **4029**
			★ **4654**
			1461-138
82C53	Calmos	CA82C53	1457-232
			1457-442
			1461-132
	OKI	**MSM82C53-5**	★ **4732**
			1457-392
82C54	Calmos	CA82C54	1457-383
			1457-440
	Harris	**82C54**	★ **682**
			★ **1619**
			★ **1620**
			★ **1631**
			★ **4029**
			★ **4654**
			1461-133
	S-MOS	SMC82C54A	1459-44
			1457-237
		SMC82C54AC	1461-134
82C55	**Harris**	**82C55A**	★ **682**
			★ **1619**
			★ **1621**
			★ **1631**
			★ **4029**
			★ **4654**
			1461-135
	OKI	**MSM82C55A**	★ **4732**
			1457-247
	S-MOS	SMC82C55A-5	1459-50
			1457-248
		SMC82C55AC-5	1457-399
		SRM82C55AC	1461-136
	Toshiba	**TMP82C55**	★ **1750**
			1460-131
	UMC	UM82C55A	1461-137
82C56	Harris	82C56	1461-119
82C57	OKI	MSM82C57	1457-369
82C59	Calmos	CA82C59A	1457-373
	Harris	**82C59A**	★ **682**
			★ **1619**
			★ **1621**
			★ **1631**
			★ **4029**
			★ **4654**
			1461-122
	OKI	**MSM82C59A**	★ **4732**
			1461-123
	S-MOS	SMC82C59AC	1461-124
			1461-128
82C82	**Harris**	**82C82**	★ **682**
			★ **1619**
			★ **1622**
			★ **1631**
			★ **4029**
			★ **4654**
			1462-33
			¶ 358-13
			¶ 376-9
82C83	**Harris**	**82C83**	★ **1619**
			★ **1622**
			1462-25
82C84	**Harris**	**82C84A**	★ **682**
			★ **1619**
			★ **1623**
			★ **1631**
			★ **4029**
			★ **4654**
			1461-105
	OKI	**MSM82C84A**	★ **4732**
			1461-106
	UMC	UM82C84A	1461-107
82C85	**Harris**	**82C85**	★ **1619**
			★ **1623**
			★ **1626**
			★ **4029**
			1461-104
82C86	**Harris**	**82C86**	★ **1619**
			★ **1622**
			1462-18
82C87	**Harris**	**82C87**	★ **1619**
			★ **1622**
			1462-7
82C88	**Harris**	**82C88**	★ **682**
			★ **1619**
			★ **1623**
			★ **1631**
			★ **4029**
			★ **4654**
			1461-85
	OKI	**MSM82C88**	★ **4732**
			1461-91
	UMC	UM82C88	1461-54
82C89	**Harris**	**82C89**	★ **682**
			★ **1619**
			★ **1623**
			★ **1631**
			★ **4654**
			1461-75
82HM185			
	Intersil	82HM185C	3849-33
82HS1281			
	Signetics	**N82HS1281**	★ **4167**
			3822-92
82HS181			
	Intel	82HS181	3817-103
82HS187			
	Signetics	**82HS187**	★ **4172**
		N82HS187	★ **4166**
			3817-113
		N82HS187A	★ **4166**
			3817-95
82HS189			
	Signetics	**N82HS189**	★ **4166**
			3817-114
		N82HS189A	★ **4166**
			3817-96
82HS191			
	Intel	82HS191	3819-15
82HS195			
	Signetics	**82HS195**	★ **4169**
		N82HS195	★ **4167**
			3820-6
		N82HS195A	★ **4167**
			3820-3
		N82HS195B	★ **4167**
			3819-111
		S82HS195	3820-15
82HS197			
	Signetics	**N82HS197**	★ **4167**
			3819-39
82HS199			
	Signetics	**N82HS199**	★ **4167**
			3819-40
82HS321			
	Intel	82HS321	3820-37
	Signetics	**82HS321**	★ **4170**
		N82HS321	★ **4167**
			3820-38
		N82HS321A	★ **4167**
			3820-34
		N82HS321B	★ **4167**
			3820-32
82HS641			
	Signetics	**82HS641**	★ **4171**
		N82HS641	★ **4167**
			3821-55
		N82HS641A	★ **4167**
			3821-42
		N82HS641B	★ **4167**
			3821-30
82L43	**Fujitsu**	**MBL82L43**	★ **1611**
82LS05	National	INS82LS05	1457-143
82LS135			
	Signetics	**N82LS135**	★ **4166**
			3815-21
82LS16	**Signetics**	**N82LS16**	★ **4166**
			3832-56
		S82LS16	3832-73
82LS17	Signetics	N82LS17	3832-55
		S82LS17	3832-72
82LS181			
	Signetics	**N82LS181**	★ **1175**
			3817-156
		S82LS181	3817-157
82M56	**Dense-Pac**	**DPS82M56**	★ **4008**
			3848-7
82PC08	National	MM82PC08	886-113
			1460-30
			1460-31
82PC12	National	MM82PC12	1460-47
82S09	**Signetics**	**N82S09**	★ **4166**
		S82S09	3832-25
82S100	Motorola	MC82S100C	4473-72
		MC82S100M	4473-77
	Signetics	N82S100	4473-73
82S101	Motorola	MC82S101C	4473-70
		MC82S101M	4473-76
	Signetics	N82S101	4473-71
82S102	Signetics	82S102	¶ 445-2
		N82S102	4473-46
82S103	Signetics	82S103	¶ 445-2
		N82S103	4473-47
82S104	Signetics	N82S104	4474-64
		N82S104A	4474-60
	TI	TIB82S104A	4474-61
82S105	Signetics	82S105	¶ 399-13
		N82S105	4474-65
		N82S105A	4474-62
	TI	**TIB82S105A**	★ **4788**
			4474-63
82S115	**Signetics**	**N82S115**	★ **4166**
			3816-40
82S123	**Signetics**	**N82S123**	★ **4166**
			3814-56
		S82S123	3814-62
82S126	**Signetics**	**N82S126**	★ **4166**
			3814-105
		S82S126	3814-123
82S129	**Signetics**	**N82S129**	★ **4166**
			3814-108
		S82S129	3814-124
82S130	**Signetics**	**N82S130**	★ **4166**
			3815-40
		S82S130	3815-64
82S131	**Signetics**	**N82S131**	★ **4166**
			3815-44
		S82S131	3815-68
82S135	**Signetics**	**N82S135**	★ **4166**
82S137	**Signetics**	**N82S137**	★ **4166**
			3817-31
		N82S137B	★ **4166**
			3816-97
		S82S137	3817-42
		S82S137A	3817-39
82S141	Signetics	N82S141	3816-41
		S82S141	3816-66
82S147	**Signetics**	**N82S147A**	★ **4166**
			3816-12
82S150	Signetics	N82S150	4473-50
		S82S150	4473-49
82S151	Signetics	N82S151	4473-51
82S152	Signetics	N82S152	4474-5
		N82S152A	4474-3
82S153	Signetics	N82S153	4474-6
		N82S153A	4474-4
82S154	Signetics	N82S154	4475-1
82S155	Signetics	N82S155	4475-2
82S156	Signetics	N82S156	4474-69
82S157	Signetics	N82S157	4474-70
82S158	Signetics	N82S158	4474-66
82S159	Signetics	N82S159	4474-67
82S16	**Signetics**	**N82S16**	★ **4166**
			3832-66
82S167	Signetics	N82S167	4474-52
	TI	**82S167A**	★ **4793**
			4474-50
		TIB82S167B	★ **4792**
			4474-51
82S17	Signetics	N82S17	3832-64
82S180	Signetics	N82S180	3817-127
82S181	Intel	82S181	3817-110
	Signetics	**N82S181**	★ **4166**
			3817-133
		N82S181A	★ **4166**
			3817-115
		N82S181B	★ **4166**
			3817-97
		S82S181	3817-148
		S82S181A	3817-146
82S183	**Signetics**	**N82S183**	★ **4166**
			3817-126
		S82S183	3817-149
82S185	**Signetics**	**N82S185**	★ **4166**
			3818-56
		N82S185A	★ **4166**
			3818-25
		N82S185B	★ **4166**
			3818-18
		S82S185	3818-57
		S82S185A	3818-51
82S19	**Signetics**	**N82S19**	★ **4166**
			3832-20
		S82S19	3832-24
82S191	Intel	82S191	3819-51
	Signetics	**N82S191**	★ **4167**
			3819-65
		N82S191A	★ **4167**
			3818-42
		S82S191	3819-70
		S82S191A	3818-52
82S21	Signetics	N82S21	877-70
			3832-3
82S210	Signetics	N82S210	3834-18
		S82S210	3834-20
82S212	**Signetics**	**82S212**	★ **4168**
		N82S212	★ **4166**
			(Continued)

¶ Indicates page number in Application Note Directory.
★ Indicates additional data is provided on the page noted.

Base Number	Source	Device	Page-Line
82S212	Signetics	N82S212	3834-16
		N82S212A	**★4166**
			3834-13
		S82S212	3834-19
82S23	**Signetics**	**N82S23**	**★4166**
			3814-51
		S82S23	3814-60
82S25	Signetics	N82S25	3831-70
		S82S25	3831-98
82S2708			
	Signetics	S82S2708	3817-150
82S30	Signetics	S82S30	879-146
82S31	Signetics	S82S31	879-147
82S32	Signetics	S82S32	879-148
82S321	Intel	82S321	3820-41
	Signetics	**N82S321**	**★4167**
			3820-63
82S41	**Signetics**	**N82S41**	**★1175**
			874-85
82S42	**Signetics**	**N82S42**	**★1175**
82S50	**Signetics**	**N82S50**	**★1175**
			862-79
82S52	**Signetics**	**N82S52**	**★1175**
			862-147
82S62	AMD	AM82S62C	889-29
		AM82S62M	889-30
	Signetics	**N82S62**	**★1175**
			889-39
82S71	**Signetics**	**N82S71**	**★1175**
82S82	**Signetics**	**N82S82**	**★1175**
			856-68
82S83	**Signetics**	**N82S83**	**★1175**
			854-16
83	ACE	DPC-83U	2021-13
	Apex	**PA83**	**★3525**
			3348-106
			3360-19
			3330-122
			3331-60
			3346-173
		PA83A	**★3525**
			3344-5
		PA83M	**★3525**
			3348-107
			3360-20
			3330-123
			3331-61
			3346-174
	MCE	MCE83	3368-50
	PMI	RPT-83	3380-95
830	Burr-Brown	MP830-72	2036-12
	Datel	**ADC-830**	**★3157**
			★3162
			2835-21
	MicroPwr	**MP830**	**★3605**
			3309-147
	National	NSC830	1460-42
		NSC830-1	1460-43
		NSC830-4	1460-44
	SGS	TCA830S	3318-63
			¶ 409-5
	SMC	MPU830	1460-45
	Telefunken	TCA830	3318-73
8300	Motorola	MC8300	881-28
			3854-33
	National	DM8300	881-32
			3854-100
	Zilog	Z8300-CPU	1460-82
8301	MicroSys	SB8301	2039-38
	Motorola	MC8301	862-120
	National	DM8301	862-124
	NCR	NCR8301	1469-99
8303	AMD	DP8303	2890-4
	MicroSys	SB8303	2039-37
	National	DP8303	2890-13
8304	AMD	DP8304B	885-101
			2889-53
	Analogic	AH8304T	843-132
	Burr-Brown	MP8304	2035-34
	CTI	MA8304	4441-26
	Motorola	MC8304	854-168
	National	DP8304	2889-54
			1457-107
		DP8304B	2890-14
8305	Burr-Brown	MP8305	2035-35
8306	ThomsonCSF	TS8306	1470-62
8307	AMD	DP8307	2890-5
	Motorola	MC8307	2875-70
	National	DP8307	2890-15
8308	AMD	DP8308	2890-6
	Analogic	AH8308E	2855-42
		AH8308T	844-10
			2855-43
		MP8308	2855-46
		MP8308ECL	2855-44
	Datel	DAC-8308	2854-6
	Motorola	MC8308	875-27
	National	DP8308	2890-16
	ThomsonCSF	TS8308	1470-63
8309	Motorola	MC8309	878-5
	National	DM8309	878-7
831	**MicroPwr**	**MP831**	**★3605**
			3309-148
	National	NSC831	1460-32
		NSC831-1	1460-33
		NSC831-4	1460-34
	SMC	MPU831	1460-35
8310	Motorola	MC8310	860-138
	National	DM8310	860-142
		DP8310	2898-133
	NCR	**NCR8310**	**★3214**
			1469-104
831000	Fujitsu	MB831000-15	3853-70
		MB831000-20	3853-76
8311	Motorola	MC8311	863-170
	National	DM8311	863-174
		DP8311	2898-134
831124	**Fujitsu**	**MB831124-35**	**★4019**
			3853-94
8312	Motorola	MC8312	879-139
	National	DM8312	879-141
8314	Motorola	MC8314	875-70
8316	Burr-Brown	MP8316-I	2035-37
		MP8316-V	2035-36
	Motorola	MC8316	858-124
	National	DM8316	858-128
	TI	SBP8316C	3849-49
		SBP8316M	3849-50
8318	Analogic	MP8318	2855-47
		MP8318ECL	2855-45
	Datel	DAC-8318	2854-7
	Motorola	MC8318	888-141
	National	DM8318	888-145
832	Comark	CBX-AD832	2032-44
		MCX-AD832	2035-2
	MicroPwr	**MP832**	**★3605**
			3309-149
	National	LM832	3316-154
			¶ 416-10
	Octagon	832	2040-28
8320	**LSILogic**	**LL8320**	**★4676**
			4450-17
	MicroSys	SB8320	2039-39
	Zilog	Z8320-PIO	1460-130
8321	UMC	UM8321	1466-20
8322	Motorola	MC8322	878-162
	National	DM8322	878-166
8324	Motorola	MC8324	854-52
83256	Fujitsu	MB83256	3852-117
8326	UMC	UM8326	1467-68
		UM8326B	1467-69
8328	Motorola	MC8328	882-156
			3856-86
8329	UMC	UM8329	1467-78
		UM8329B	1467-79
833	**MicroPwr**	**MP833**	**★3605**
			3309-150
	National	LM833	3366-29
			¶ 404-4
	NEC	μPD833	3320-57
	Unitrode	UFN833	¶ 426-13
8330	Zilog	Z8330-CTC	1460-100
8334	National	DM8334	875-129
834	Analogic	AD/AM-834	2846-26
	Panasonic	DN834	891-74
8340	National	DP8340	2901-52
	S-MOS	SMC8340F	1429-18
	Zilog	Z8340-SIO	1461-15
8341	MicroSys	SB8341	2039-34
	National	DP8341	2901-33
8342	National	DP8342	2901-53
			¶ 410-12
8343	National	DP8343	2901-32
			¶ 410-12
8345	MicroSys	SB8345	2039-35
835	Analogic	AD/AM-835	2846-38
	National	LMC835	3316-138
	Panasonic	DN835	891-75
8350	National	DP8350	1457-126
			1465-78
			¶ 363-10
			¶ 365-7
			¶ 366-17
8352	National	DP8352	1457-127
8353	National	DP8353	1457-128
8355	Intel	8355	1457-13
			1457-424
		8355-2	1457-14
			1457-425
	MicroSys	SB8355	2039-36
	Toshiba	**TMP8355**	**★1750**
			1457-427
8356	National	DP8356	1457-250
8360	Sanyo	LM8360	3320-64
83600	GI	K83600	2880-12
8361	Sanyo	LM8361	3320-65
8363	Sanyo	LM8363	3320-77
8364	Sanyo	LM8364	3320-78
837	Panasonic	DN837	891-76
8372	Sanyo	LM8372	3320-152
838	Panasonic	DN838	891-77
839	Panasonic	DN839	891-78
	TI	**TIFPLA839C**	**★4794**
			4473-67
		TIFPLA839M	**★4794**
			4473-68
8392	National	DP8392	1464-97
			1458-17
8396	Intel	8396	1463-92
83C351	**Signetics**	**SCC83C351**	**★3733**
			1457-58
83C55	Calmos	CA83C55	3849-35
	Harris	**HS83C55RH**	**★ 628**
			1457-12
			1457-423
	OKI	**MSM83C55**	**★4732**
			1457-15
			1457-426
83C59	**OKI**	**MSM83C59**	**★4732**
84	AD	ADADC84-10	2839-2
		ADADC84-12	2840-20
		ADDAC84	**★3130**
	Apex	**PA84**	**★3525**
			3348-120
			3360-21
			3330-136
			3331-62
			3346-172
		PA84A	**★3525**
			3344-4
		PA84M	**★3525**
			3346-176
		PA84S	**★3525**
			3346-175
	Burr-Brown	**ADC84K-10**	**★3146**
			2838-29
		ADC84K-12	**★3146**
			2840-29
	Datel	**ADC-84-10**	**★3161**
			2838-22
		ADC-84-12	**★3161**
			2840-21
	MCE	MCE84	3372-19
	MicroNet	**MNADC84-10**	**★3203**
			2838-26
		MNADC84-12	**★3203**
			2840-9
	Signetics	**MAB84**	**★3731**
			★3733
		SCC84C	**★3733**
840	Burr-Brown	MP840	2036-11
	MicroPwr	**MP840**	**★3605**
			3309-151
	TI	**TIFPLA840C**	**★4794**
			4473-64
		TIFPLA840M	**★4794**
			4473-65
8400	**Goldstar**	**Z8400**	**★1612**
			1460-62
	Intech	A8400	3405-100
	National	DP8400	2879-6
			¶ 378-14
			¶ 400-10
			¶ 400-12
	Signetics	**TDA8400**	**★3733**
	Zilog	Z8400	1460-80
8402	Intech	A8402	3405-101
	National	DP8402	887-57
8404	Intech	A8404	3405-102
8408	National	DP8408	2892-88
			2892-95
			¶ 371-9
	ThomsonCSF	TS8408	1470-64
8409	National	DP8409	2892-96
			¶ 371-9
			¶ 378-14
841	**MicroPwr**	**MP841**	**★3605**
			3309-152
8410	Zilog	Z8410-DMA	1460-115
8412	MicroSys	SB8412	2039-33
8414	MicroSys	SB8414	2041-25
8415	NCR	NCR8415	1469-161
8416	Fujitsu	MB8416	3838-103
		MB8416-25W	3839-27
		MB8416A-12	3838-18
		MB8416A-12L	3838-19
		MB8416A-15	3838-53
		MB8416A-15L	3838-54
	MicroSys	SB8416	2040-33
8417	Fujitsu	MB8417	3838-104
		MB8417A-12	3838-20
		MB8417A-12L	3838-21
		MB8417A-15	3838-55
		MB8417A-15L	3838-56
8418	Burr-Brown	MP8418	2035-19
			¶ 373-11
		MP8418-AO	2035-20
		MP8418-EXP	2035-15
		MP8418-ISOE	2035-14
		MP8418-PGA	2035-21
		MP8418-PGA-AO	2035-22
	Fujitsu	MB8418	3838-105
		MB8418A-12	3838-22
		MB8418A-12L	3838-23
		MB8418A-15	3838-57
		MB8418A-15L	3838-58
8419	National	DP8419	2895-65
			¶ 378-14
842	**MicroPwr**	**MP842**	**★3605**
			3309-153
8420	**Goldstar**	**Z8420**	**★1612**
			1460-119
	MicroSys	SB8420	2041-26
	Zilog	Z8420-PIO	1460-128
8422	MicroSys	SB8422	2039-32
84240	National	DP84240	2893-36
84244	National	DP84244	2893-37
84256	Fujitsu	MB84256-100	3846-46
		MB84256-150	3846-56
843	**MicroPwr**	**MP843**	**★3605**
			3309-154
8430	Burr-Brown	MP8430	2035-25
	Goldstar	**Z8430**	**★1612**
			1460-88
	Zilog	Z8430-CTC	1460-98
84300	National	DP84300	2892-103
84312	National	DP84312	2892-97
			1464-24
84322	National	DP84322	2892-98
			1464-25
84332	National	DP84332	2892-99
			1461-114
844	**MicroPwr**	**MP844**	**★3605**
			3309-155
8440	**Goldstar**	**Z8440**	**★1612**
			1460-132
	Signetics	**TDA8440**	**★3733**
	Zilog	Z8440-SIO	1461-2
		Z8440A-SIO	1461-3
		Z8440B-SIO	1461-4
8441	Zilog	Z8441-SIO	1461-5
		Z8441B-SIO	1461-6
84412	National	DP84412	2895-66

Arranged alphanumerically from left to right.

Base Number	Source	Device	Page-Line
8442	**Signetics**	**TDA8442**	★ **3733**
	Zilog	Z8442-SIO	1461-7
		Z8442A-SIO	1461-8
		Z8442B-SIO	1461-9
84422	National	DP84422	1461-115
8443	**Signetics**	**TDA8443**	★ **3733**
8444	**Dense-Pac**	**DPS8444**	★ **4008**
			3847-67
8449	Zilog	Z8449	1461-10
845	**MicroPwr**	**MP845**	★ **3605**
			3309-156
8450	Burr-Brown	MP8450	2035-26
8451	MicroSys	SB8451	2039-26
8460	National	DP8460	2892-28
			1458-6
8463	National	DP8463	2892-23
8464	Fujitsu	MB8464A-100	3843-17
		MB8464A-70	3843-2
	National	DP8464	2892-22
			1458-8
8466	MicroSys	SB8466	2041-27
	National	DP8466	2892-18
847	**Datel**	**ADC-847A**	★ **3157**
			★ **3162**
			2836-39
		ADC-847B	★ **3157**
			★ **3162**
			2833-15
8470	**Goldstar**	**Z8470**	★ **1612**
			1461-16
	Zilog	Z8470	¶ 375-17
		Z8470-DART	1461-20
8471	Sanyo	LM8471	3320-153
848	NEC	μPD848	3319-115
8480	National	DP8480	847-157
8482	National	DP8482	847-158
8488	MicroInds	BLC8488	2034-16
8489	NCR	NCR8489	3319-83
8495	Intech	A8495	3400-129
84C00	S-MOS	SMC84C00	1460-68
	Signetics	**SCC84C00**	★ **1718**
			1429-44
	Toshiba	**TMPZ84C00**	★ **1750**
			1460-74
		TMPZ84C00-3	★ **1750**
			1460-75
	Zilog	**Z84C00**	★ **1773**
			1460-81
84C10	**Toshiba**	**TMPZ84C10**	★ **1750**
			1460-113
84C20	**Signetics**	**SCC84C20**	★ **1718**
			1431-1
	Toshiba	**TMPZ84C20**	★ **1750**
			1460-127
	Zilog	**Z84C20**	★ **1773**
			1460-129
84C30	**Toshiba**	**TMPZ84C30**	★ **1750**
			1460-97
	Zilog	**Z84C30**	★ **1773**
			1460-99
84C40	**Signetics**	**SCC84C40**	★ **1718**
			1431-2
	Toshiba	**TMPZ84C40**	★ **1750**
			1460-145
	Zilog	**Z84C40**	★ **1774**
			1461-11
84C41	**Toshiba**	**TMPZ84C41**	★ **1750**
			1460-146
	Zilog	**Z84C41**	★ **1774**
			1461-12
84C42	**Toshiba**	**TMPZ84C42**	★ **1750**
			1460-147
	Zilog	**Z84C42**	★ **1774**
			1461-13
84C44	**Zilog**	**Z84C44**	★ **1774**
			1461-14
84H08	**Dense-Pac**	**DPS84H08**	★ **4008**
			3842-113
85	AD	ADADC85-10	2838-30
		ADADC85-12	2840-31
		ADDAC85	¶ 386-13
		ADDAC85/CBI	★ **3107**
			★ **3130**
			2862-28
		ADDAC85/CCD	★ **3107**
			★ **3130**
			(Continued)
85	AD	ADDAC85/CCD	2869-44
		ADDAC85C/CBI	★ **3107**
			★ **3130**
			2862-29
		ADDAC85C/CCD	★ **3107**
			★ **3130**
			2869-45
		ADSHC-85	★ **3139**
			3403-159
		ADSHC-85E	3403-160
	Burr-Brown	**ADC85-10**	★ **3146**
			2838-31
		ADC85-12	★ **3146**
			2840-32
		DAC85LD-CBI-V	★ **3147**
			2865-17
		DAC85Z-CBI-V	★ **3147**
			2865-18
		SHC85	★ **3148**
			3403-179
		SHC85ET	★ **3148**
			3403-180
	Comark	MC85	2011-9
		MC85-001	2011-10
		MC85-005	2011-11
		MF85	2034-39
		MR85-032	2036-35
		MR85-064	2036-38
		MR85-096	2036-40
		MR85-128	2036-42
	DDC	DDC-DAC85LD-CBI-I	
			2861-48
		DDC-DAC85LD-CBI-V	
			2864-40
		DDCADC85-10	2838-25
		DDCADC85-12	2840-27
	Datel	**ADC-85-10**	★ **3161**
		ADC-85-12	★ **3161**
			2840-22
		ADC-85C-10	★ **3161**
			2838-23
		ADC-85C-12	★ **3161**
			2840-23
		DAC-85C-CBI-I	2862-11
		DAC-85C-CBI-V	2864-37
	HybridSys	HSADC85B	2840-25
		HSADC85C	2840-26
	Intel	MCS-85	¶ 380-5
	Intelicom	CMOS-85/800	2042-47
	MicroNet	**DAC85-CBI**	★ **3204**
			2862-26
		DAC85-CCD	★ **3204**
			2870-3
		MNADC85-10	★ **3203**
			2838-27
		MNADC85-12	★ **3203**
			2840-10
	MicroDesigns	Multiboard-85	2005-25
	Siemens	SKC-85	2015-9
	Solarcom	SCMT-85	2019-32
		SCMT-85-C	2019 14
	Zendex	ZX85	2011-19
	Ziatech	ZT 85/38	2034-26
850	**Burr-Brown**	**DAC850-CBI-I**	★ **3147**
			2862-17
		DAC850-CBI-V	★ **3147**
			2864-19
8500	Cubit	8500	2025-37
	Intersil	**ICH8500**	★ **3601**
			3332-7
			3357-172
		ICH8500A	★ **3601**
			3332-2
			3357-171
	Lambda	LAS8500	2895-107
			¶ 422-6
	MicroSys	SB8500	2039-21
	Motorola	MC8500	2878-3
	SiliconSys	SSI8500	2878-4
	Zilog	Z8500	¶ 371-12
8501	Lambda	LAS8501	2895-108
	Motorola	MC8501	2879-5
8502	Motorola	MC8502	2879-7
	SiliconSys	SSI8502	2879-8
	SMC	COM8502	2901-62
8503	Motorola	MC8503	2879-12
8504	Motorola	MC8504	888-108
			2879-15
8505	CTI	MA8505	4441-27
	Motorola	MC8505	2892-56
8506	Motorola	MC8506	2879-9
8507	Motorola	MC8507	1470-12
			1469-148
851	**Burr-Brown**	**DAC851-CBI-I**	★ **3147**
			2862-18
			2862-21
		DAC851-CBI-V	★ **3147**
			2864-20
8510	CTI	MA8510	4441-28
	Intersil	ICH8510	¶ 409-1
		ICH8510I	★ **3600**
			2895-69
			3307-70
			3348-72
			3360-56
			3330-88
			3331-97
			3400-94
		ICH8510M	★ **3600**
			2895-70
			3307-71
			3348-73
			3360-57
			3330-89
			3331-98
	MicroSys	SB8510	2039-14
	National	DM8510	¶ 431-7
85101	Fujitsu	MB85101A-10	3827-103
		MB85101A-12	3827-116
85102	Fujitsu	MB85102A-12	3828-64
		MB85102A-15	3828-65
85103	Fujitsu	MB85103A-12	3828-31
		MB85103A-15	3828-37
85108	Fujitsu	MB85108A-10	3828-100
		MB85108A-12	3829-25
8515	CTI	MA8515	4441-33
	Intersil	**ICH8515I**	★ **3600**
			3307-68
		ICH8515M	★ **3600**
			3307-69
8516	DDC	ADH-8516-11	2844-15
		ADH-8516-12	2839-39
	Zilog	Z8516	1466-82
8518	DDC	SH-8518	3403-181
8520	**Intersil**	**ICH8520I**	★ **3600**
			2895-71
			3307-72
			3348-51
			3360-58
			3330-67
			3331-99
			3400-95
		ICH8520M	★ **3600**
			2895-72
			3307-73
			3348-52
			3360-59
			3330-68
			3331-100
	MicroSys	SB8520	2039-27
	Motorola	MC8520	2878-16
	SiliconSys	SSI8520	2878-17
85201	**Fujitsu**	**MB85201**	★ **4019**
8523	Sanyo	LM8523	3324-35
8524	**Dense-Pac**	**DPS8524**	★ **4008**
			3847-74
8528	DDC	DAC-8528-11	2866-24
		DAC-8528-12	2861-46
853	**Burr-Brown**	**SDM853**	★ **3148**
8530	AMD	Z8530	1468-42
		Z8530A	1468-4
	DDC	TH-8530	3404-169
	Intersil	**ICH8530I**	★ **3600**
			2895-73
			3307-74
			3348-47
			3360-60
			3330-63
			3331-101
			3400-96
		ICH8530M	★ **3600**
			2895-74
			(Continued)
8530	Intersil	ICH8530M	3307-75
			3348-48
			3360-61
			3330-64
			3331-102
	VTI	**VL8530**	★ **1751**
			★ **1752**
			★ **1765**
	Zilog	Z8530	¶ 384-2
		Z8530-SCC	★ **1775**
			1468-43
8531	AMD	Z8531	1465-27
	Zilog	Z8531-ASCC	1465-29
8534	MicroInds	BLC8534	2034-36
8536	AMD	Z8536	1465-51
		Z8536A	1465-52
	Zilog	Z8536	¶ 365-12
			¶ 375-16
		Z8536-CIO	★ **1775**
			1465-53
		Z8536A-CIO	★ **1775**
			1465-54
854	**Burr-Brown**	**SDM854**	★ **3148**
			3399-44
	Motorola	MC854	2900-8
8540	**Tektronix**	**8540**	★ **5117**
			1821-11
8542	National	DM8542	864-306
8544	National	DM8544	886-154
8550	**Tektronix**	**8550**	★ **5117**
			1821-12
8551	National	DM8551	866-6
			¶ 361-10
			¶ 361-11
8552	National	DM8552	¶ 361-11
8553	DDC	BUS-8553	2901-48
8554	DDC	BUS-8554	2901-49
8555	DDC	BUS-8555/56	2901-50
8556	National	DM8556	858-118
			¶ 361-9
8557	DDC	BUS-8557	2901-46
8559	DDC	BUS-8559	2901-51
856	**Burr-Brown**	**SDM856**	★ **3148**
			3399-45
		SDM856/857	¶ 364-15
		SDM856J	★ **3148**
			3399-46
		SDM856K	★ **3148**
			3399-47
	Datel	**ADC-856C**	★ **3162**
			2838-8
		ADC-856M	★ **3162**
			2838-9
8560	National	DM8560	861-121
856140	**Tektronix**	**856140**	
		Systems	★ **5117**
			1821-13
8563	National	DM8563	860-21
857	**Burr-Brown**	**SDM857**	★ **3148**
			3399-48
	CTI	MA857	3381-18
8570	National	DM8570	881-171
			3856-53
	Signetics	**PCF8570**	★ **3731**
			★ **3733**
8571	**Signetics**	**PCD8571**	★ **3731**
			★ **3733**
			3832-28
8572	GI	PCD8572	3811-74
	Signetics	**PCD8572**	★ **3733**
8573	Holt	HI8573	3374-15
	Signetics	**PCB8573**	★ **3733**
			1469-106
		PCF8573	★ **3728**
			★ **3731**
8574	Holt	HI8574	3316-52
	Signetics	**PCF8574**	★ **3731**
			★ **3733**
8575	Holt	HI8575	3315-19
	National	DM8575	4476-33
			¶ 445-1
8576	National	DM8576	4476-34
			¶ 445-1
		DM8576AAA	3808-25
	Signetics	**PCF8576**	★ **3726**
			(Continued)

¶ Indicates page number in Application Note Directory.
★ Indicates additional data is provided on the page noted.

Base Number	Source	Device	Page-Line
8576	**Signetics**	**PCF8576**	★**3733**
			2874-88
8577	**Signetics**	**PCF8577**	★**3726**
			★**3733**
			2874-90
858	**Burr-Brown**	**SDM858**	★**3148**
			3399-49
	National	NSC858	1460-46
8581	AD	AD8581B	1460-107
		AD8581L	2835-9
	Zilog	Z8581	1469-108
8585	DDC	ADH-8585-10	2845-39
		ADH-8585-12	2840-30
8586	DDC	ADH-8586-10	2845-38
		ADH-8586-12	2840-7
8589	National	DM8589	877-46
			3831-96
8590	National	DM8590	3855-109
	Zilog	Z8590	¶ 363-16
		Z8590-UPC	1468-64
8591	**Signetics**	**PCF8591**	★**3725**
			★**3733**
8594	**Zilog**	**Z8594-UPC**	★**1776**
			1468-65
8596	National	DM8596	¶ 442-2
8597	National	MM8597	¶ 442-2
8598	National	DM8598	¶ 361-11
8599	National	DM8599	877-53
			3831-76
85S06	National	DM85S06	3814-3
85S07	National	DM85S07	3814-4
85S47	National	DM85S47A	3814-1
85S68	National	DM85S68	877-67
			¶ 379-8
			3831-58
86	AMD	iAPX86/10	1435-1
		iAPX86/20	1435-2
	Comark	MR86-128	2036-41
		MR86-256	2036-44
		MR86-384	2036-45
		MR86-512	2036-49
		MT86	2034-37
	DistComp	DCS-86/16	2025-10
		DCS-ICB/86	2025-11
		DCS/86	1813-5
		DCS/86/16	2025-12
		DCS86/16	2025-16
		DCS86/8	2011-27
	DiversTech	CBC86C/05	2025-2
		CBC86C/14	2025-3
	EMM-SESCO	SECS86/05	2025-7
	Intel	SDK-86	2025-27
		iRMX 86	¶ 381-4
		iSBC86/05	2025-15
			¶ 385-13
		iSBC86/12A	¶ 385-13
		iSBC86/14	2025-19
			¶ 385-13
		iSBC86/25	¶ 385-13
		iSBC86/30	2025-20
		iSBC86/35	2021-34
		iSBC86/40	¶ 385-13
	Matrox	MBC-86/12A	2025-17
	Microbar	DBC86	2025-9
	PMI	DAC-86	¶ 388-6
			¶ 395-14
		DAC-86C	★**3637**
			2856-11
			2859-77
			2869-41
		DAC-86E	★**3637**
			2856-6
			2859-76
			2869-38
	Teletek	SBC-86/87	2027-6
	Zendex	ZX86	2025-18
860	Applicon	APLE860	5040-85
			5041-7
			5041-1
			5040-79
			5041-13
8600	Plessey	SP8600A	890-90
		SP8600B	890-91
	Zilog	Z8600	¶ 370-7
			¶ 373-14
			¶ 383-13
8601	MicroSys	SB8601	2039-6
	Motorola	MC8601	880-104
	National	DM8601	880-106
	Siliconix	**SI8601**	★**3248**
			★**3256**
			2836-15
	Zilog	**Z8601-12**	★**1774**
			1433-7
		Z8601-MCU	★**1774**
			1460-48
			1433-8
8602	Motorola	MC8602	880-165
	National	DM8602	880-167
	Plessey	SP8602A	890-78
		SP8602B	890-79
	Siliconix	SI8602	3399-33
8603	**Zilog**	**Z8603-MCU**	★**1774**
			1460-49
			1433-9
8605	Plessey	SP8605B	890-80
		SP8605M	890-81
8606	Plessey	SP8606B	890-75
		SP8606M	890-76
8607	Plessey	SP8607A	890-82
		SP8607B	890-83
8608	Burr-Brown	MP8608	2035-17
		MP8608-A0	2035-18
861	Siemens	TAA861	3357-87
	ThomsonCSF	TAA861	3357-90
8610	MicroInds	BLS8610	2035-55
	Plessey	SP8610	849-80
8611	Plessey	SP8611A	849-81
		SP8611B	849-82
	Zilog	Z8611	¶ 368-5
		Z8611-12	1433-10
		Z8611-MCU	1460-50
			1433-11
8612	Zilog	Z8612-12	1433-12
		Z8612-MCU	1460-51
			1433-13
8613	National	DM8613	864-206
	Plessey	SP8613	890-86
	Zilog	Z8613-12	1433-14
		Z8613-MCU	1460-52
			1433-15
8614	National	DS8614	891-8
8615	National	DS8615	891-13
8616	Burr-Brown	MP8616	2035-24
		MP8616-A0	2035-23
	National	DS8616	891-16
8617	National	DS8617	891-33
	Plessey	SP8617B	849-83
862	Siemens	TAA862	3350-40
8621	National	DS8621	891-31
			3375-77
			3376-82
8622	National	DS8622	891-38
			3375-80
8627	National	DS8627	891-9
8628	National	DS8628	891-4
8629	National	DS8629	891-35
			3375-73
	Plessey	SP8629	891-36
			3375-74
8630	Comark	MC8630/35	2021-37
	MicroSys	SB8630	2039-2
	Plessey	SP8630A	890-106
		SP8630B	890-107
8632	Burr-Brown	MP8632	2035-28
		MP8632-A0	2035-27
8640	National	DS8640	2885-38
8641	Intel	8641A	1457-21
			1457-272
	National	DS8641	2888-30
8643	Plessey	SP8643	3376-71
		SP8643B	890-111
8647	Plessey	SP8647	3376-72
		SP8647A	890-112
		SP8647B	890-113
8649	**Fujitsu**	**MBL8649**	★**1611**
865	Siemens	TAA865	3357-88
8654	National	DS8654	2896-45
8655	Plessey	SP8655A	891-10
		SP8655B	891-11
8657	Plessey	SP8657A	891-5
		SP8657B	891-6
8658	Plessey	SP8658	891-7
8659	Plessey	SP8659A	891-1
		SP8659B	891-2
8661	Signetics	SCN8661A	1466-92
8665	Plessey	SP8665B	890-104
8668	Plessey	SP8668B	890-105
8669	National	DS8669	2875-147
8671	Zilog	Z8671	¶ 384-3
		Z8671-MCU	1460-53
			1433-16
8678	National	DM8678	3808-3
			3808-12
			¶ 431-12
			¶ 431-14
			¶ 431-15
868	Datel	ADC-868	844-43
8680	Plessey	SP8680	849-89
		SP8680A	890-114
		SP8680B	890-115
8681	**Zilog**	**Z8681-12**	★**1775**
			1433-17
		Z8681-MCU	★**1775**
			1460-54
			1433-18
8682	Zilog	Z8682-MCU	1460-55
8685	Plessey	SP8685	3376-73
		SP8685A	890-116
		SP8685B	890-117
8690	Plessey	SP8690	3376-74
			¶ 415-19
		SP8690A	890-118
		SP8690B	890-119
8692	National	DS8692	2896-46
8693	National	DS8693	2896-47
8694	National	DS8694	2896-48
86L01	Zilog	Z86L01	1460-56
86L11	Zilog	Z86L11	1460-57
86L81	Zilog	Z86L81	1460-58
86LS52	National	DM86LS52	876-135
86LS62	National	DM86LS62	876-136
86M44	**Dense-Pac**	**DPS86M44**	★**4008**
			3847-66
86P11	Zilog	Z86P11	1460-59
86S128	National	DM86S128	3808-4
			3808-13
86S64	National	DM86S64	3808-5
			3808-14
87	**AD**	**ADDAC87/CBI**	★**3107**
			2862-25
	Burr-Brown	**ADC87/MIL**	★**3153**
			2840-12
		ADC87U	★**3153**
			2840-13
		DAC87/CBI	★**3153**
			2865-26
	DDC	DDC-DAC87-CBI-I	
			2861-49
			2864-39
		DDCADC87-10	2838-24
		DDCADC87-12	2840-28
	Datel	ADC-87-10	2838-28
		ADC-87-12	2840-24
		DAC-87C-CBI-I	2862-12
		DAC-87C-CBI-V	2864-38
	HybridSys	HSDAC87ASB	2866-7
		HSDAC87ATB	2865-23
		HSDAC87AUB	2861-21
	MicroNet	**MNADC87**	★**3203**
			2840-11
		MNDAC87	2864-42
	PMI	DAC-87	¶ 388-6
			¶ 395-14
	Ziatech	ZT87	2034-25
870	**Burr-Brown**	**DAC870U**	★**3153**
			2864-35
		DAC870V	★**3153**
			2864-36
	Octagon	870	2041-59
8700	DDC	HMSDC-8700	3403-98
	TeledyneS	8700	¶ 387-8
		TSC8700	2835-42
87001	**Fujitsu**	**MB87001**	★**1611**
			3375-138
87003	**Fujitsu**	**MB87003**	★**1611**
			3378-40
87004	**Fujitsu**	**MB87004**	★**1611**
			3378-41
87007	Fujitsu	MB87007	3378-138
87008	Fujitsu	MB87008	3378-139
8701	TeledyneS	TSC8701	2838-48
8702	National	MM8702A-4	3815-22
	TeledyneS	TSC8702	2843-4
8703	TeledyneS	TSC8703	2835-43
8704	TeledyneS	TSC8704	2838-49
8705	TeledyneS	TSC8705	2843-5
8708	National	INS8708	3817-161
871	Siemens	TCA871	3309-29
8720	Plessey	SP8720	890-85
			3376-55
8735	Plessey	SP8735B	890-99
8737	MicroInds	MIB8737-1	2035-12
		MIB8737-3	2035-13
8740	MicroSys	SB8740	2041-23
	Plessey	SP8740	3376-60
		SP8740A	890-95
		SP8740B	890-96
8741	Intel	8741	¶ 365-15
			¶ 375-1
		8741A	1457-22
			1457-273
			1457-431
			1468-67
		M8741A	1457-24
	NEC	µPD8741A	1457-275
			1457-433
	Plessey	SP8741	3376-63
		SP8741A	890-97
		SP8741B	890-98
	Signetics	µPD8741A	1457-28
8742	**Fujitsu**	**MBL8742**	★**1611**
	Intel	8742	1457-23
			1468-69
8743	Plessey	SP8743	3376-66
		SP8743B	890-102
		SP8743M	890-103
8744	Intel	8744	1457-32
			1468-71
8748	AMD	AM8748	1456-4
	Intel	8748	¶ 365-15
			¶ 375-1
		8748-8	1456-6
		8748H	1456-7
			1421-20
		M8748	1456-10
	NEC	µPD8748	1456-11
			1427-28
8749	**Fujitsu**	**MBL8749**	★**1611**
			1456-5
	Intel	8749H	1456-8
		8749H-8	1456-9
		M8749H	1421-28
	NEC	µPD8749	1456-12
8750	TeledyneS	TSC8750	2848-40
8751	AMD	8751H	1457-33
	Intel	8751	1457-35
			¶ 380-4
		8751H	1421-21
		M8751H	1457-36
	TeledyneS	TSC8751	2848-50
8755	Intel	8755A	1459-51
			1457-318
			1457-401
		M8755A	1457-319
	NEC	µPD8755A	1459-52
			1457-320
			1457-402
	OKI	MSM8755	1457-321
	Plessey	SP8755A	891-18
		SP8755B	891-19
8760	Plessey	SP8760	¶ 415-19
8764	**Fujitsu**	**MB8764**	★**1611**
			886-162
		MBL8764	844-60
8780	**Burr-Brown**	**OPA8780U**	★**3154**
			3357-5
		OPA8780UM	★**3154**
			3357-4
		OPA8780V	★**3154**
			3357-3
		OPA8780VM	★**3154**
			3357-2

Arranged alphanumerically from left to right.

PART NUMBER INDEX

Base Number	Source	Device	Page-Line
8790	Plessey	SP8790	3375-6
			¶ 415-19
		SP8790A	891-62
			3375-2
		SP8790B	891-63
			3375-3
8792	Plessey	SP8792	3376-86
		SP8792A	3376-87
8793	Plessey	SP8793	3376-78
		SP8793A	3376-79
8794	Plessey	SP8794A	891-64
			3375-4
		SP8794B	891-65
			3375-5
8795	**Fujitsu**	**MB8795A**	**★1611**
			1466-97
87C256	**Intel**	**87C256**	**★4079**
			3823-97
		87C256-2	**★4079**
			3823-90
		87C256-20	**★4079**
			3823-91
		87C256-200	**★4079**
			3823-92
		87C256-25	**★4079**
			3823-98
		87C256-250	**★4079**
			3823-99
		87C256-3	**★4079**
			3823-105
		87C256-30	**★4079**
			3823-106
		87C256-300	**★4079**
			3823-107
87C32	Rockwell	R87C32-35	3820-94
		R87C32-45	3820-100
		R87C32-55	3820-112
87C64	**Intel**	**87C64**	**★4078**
			3821-87
		87C64-1	**★4078**
			3821-4
		87C64-15	**★4078**
			3821-5
		87C64-150	**★4078**
			3821-6
		87C64-2	**★4078**
			3821-11
		87C64-20	**★4078**
			3821-12
		87C64-200	**★4078**
			3821-13
		87C64-25	**★4078**
			3821-17
		87C64-250	**★4078**
			3821-18
		87C64-3	**★4078**
			3821-23
		87C64-30	**★4078**
			3821-24
		87C64-300	**★4078**
			3821-25
	Rockwell	R87C64-2	3821-90
		R87C64-25	3822-5
		R87C64-35	3822-52
87LS181			
	National	DM87LS181	3817-154
87P50	National	NS87P50	1456-99
			1427-1
87S180	National	DM87S180	3817-106
87S181	National	DM87S181	3817-130
		DM87S181A	3817-7
87S184	National	DM87S184	3818-29
87S185	National	DM87S185	3818-34
		DM87S185A	3818-17
		DM87S185B	3818-10
87S188	National	DM87S188	3814-7
87S190	National	DM87S190	3819-42
87S191	National	DM87S191	3819-48
		DM87S191A	3818-116
		DM87S191B	3818-97
87S195	National	DM87S195A	3820-5
		DM87S195B	3820-2
87S280	National	DM87S280	3817-107
87S281	National	DM87S281	3817-112
87S288	National	DM87S288	3814-9
87S290	National	DM87S290	3819-43
87S291	National	DM87S291	3819-49
		DM87S291A	3818-117
		DM87S291B	3818-98
87S321	National	DM87S321	3820-48
87S401	National	DM87S401	3809-68
		DM87S401A	3809-79
87S402	National	DM87S402	3809-101
		DM87S402A	3809-108
87S421	National	DM87S421	3820-49
87SR181			
	National	DM87SR181	3817-84
87SR25	National	DM87SR25	3815-91
87SR27	National	DM87SR27	3815-87
87SR474			
	National	DM87SR474	3815-92
87SR476			
	National	DM87SR476	3815-93
88	ACE	DPC-88U	2021-9
	AMD	iAPX88/10	1433-25
		iAPX88/20	1433-26
	Dense-Pac	**DPN88**	**★4008**
			3813-1
	DistComp	DCS-IWW/88	2011-20
	DiversTech	CBC88C/25	2011-1
	Intel	iSBC88/25	2011-22
		iSBC88/40	2011-23
		iSBC88/45	2023-7
			2031-37
	MicroNet	**DAC88**	**★3204**
			2865-34
	Onset	MEM-88	2030-12
	PMI	**DAC-88E**	**★3637**
			2856-7
			2859-74
		DMX-88E	2830-186
		DMX-88F	2830-188
		MUX-88	¶ 401-3
		MUX-88E	2830-180
		MUX-88F	2830-185
	Solarcom	SCMT-88	2019-20
	Vesta	iPC-STD88-3	2023-1
		ipc-SBC88-1	2005-26
		ipc-SBC88-2	2005-27
		ipc-STD88-1	2023-2
		ipc-STD88-2	2023-3
	Zendex	ZX88	2011-28
880	Intech	A-880	3404-21
	Octagon	880 CPU	2023-4
8800	CalDevices	CDI8800	4440-26
	National	DS8800	886-139
	Zilog	**Z8800**	**★1776**
			1460-60
8801	MonSys	MSC8801	1817-14
8802	MonSys	MSC8802	1817-15
8803	National	DS8803	2893-42
8804	Mitel	MT8804A	3378-17
			¶ 401-16
		MT8804B	3378-18
8805	National	MH8805	2892-124
8806	MonSys	MSC8806	1817-16
	Ziatech	ZT8806	2019-22
8807	MonSys	MSC8807	1817-17
	National	DS8807	2893-43
8808	**Harris**	**HM8808**	**★4026**
			3843-76
		HM8808A	**★4026**
			3843-77
		HM8808AB	**★4026**
			3843-48
		HM8808AS	**★4026**
			3843-25
		HM8808B	**★4026**
			3843-49
		HM8808S	**★4026**
			3843-26
881	Octagon	QBC-881	2023-12
8810	National	DS8810	864-40
	Ziatech	ZT8810	2019-23
8811	National	DS8811	864-41
	Plessey	NJ8811	3375-104
8812	National	DS8812	864-101
	Plessey	NJ8812	3375-105
	Ziatech	ZT8812/8813	2019-27
8814	Ziatech	ZT8814/8815	2019-15
8815	**Signetics**	**N8815**	**★1175**
8816	Harris	HM8816	3845-116
		HM8816H	3845-109
	Ziatech	ZT8816	2025-38
8817	Ziatech	ZT8817	2025-39
8819	National	DS8819	864-22
882	Intech	A-882	3404-22
8820	National	DS8820	2887-9
			¶ 395-5
			¶ 395-17
			¶ 396-12
		DS8820A	2887-4
	Plessey	MJ8820	3376-3
	Ziatech	ZT 8820	2041-50
88200	**Fujitsu**	**MB88200**	**★1611**
88201	Fujitsu	MB88201	1450-52
			1405-11
88202	Fujitsu	MB88202	1450-53
			1405-12
88205	Aptek	AMS88205-5NC	3382-4
8821	Ziatech	ZT 8821	2042-28
88210	Mitel	MH88210	¶ 410-14
			¶ 410-16
8822	National	DS8822	2885-9
	Ziatech	ZT8822	2042-2
8823	Ziatech	ZY8823	2042-1
8824	Ziatech	ZT8824	2041-56
8830	National	DM8830	¶ 431-7
		DS8830	2883-32
			¶ 395-5
			¶ 395-17
			¶ 396-12
	Ziatech	ZT8830	2019-28
88303	**Fujitsu**	**MB88303**	**★1611**
			3325-93
			1468-58
88304	**Fujitsu**	**MB88304**	**★1611**
88305	**Fujitsu**	**MB88305**	**★1611**
	Mitel	MH88305	3382-6
			¶ 410-14
			¶ 410-16
88306	**Fujitsu**	**MB88306**	**★1611**
88307	**Fujitsu**	**MB88307**	**★1611**
88308	**Fujitsu**	**MB88308**	**★1611**
88309	**Fujitsu**	**MB88309**	**★1611**
8831	National	DS8831	2881-30
			2883-39
			¶ 361-1
			¶ 361-11
			¶ 395-5
	Ziatech	ZT8831	2019-29
88315	**Fujitsu**	**MB88315**	**★1611**
88316	**Fujitsu**	**MB88316**	**★1611**
88317	**Fujitsu**	**MB88317**	**★1611**
8832	Harris	HM8832	3846-57
	National	DS8832	2881-24
			2883-45
			¶ 395-5
8833	National	DS8833	2889-21
			¶ 395-5
			1457-108
8834	National	DS8834	2889-16
			¶ 395-5
8835	National	DS8835	2889-14
			¶ 395-5
			1457-109
8836	National	DS8836	2885-36
			¶ 395-5
8837	National	DS8837	2885-54
			¶ 395-5
8838	National	DS8838	2888-2
			¶ 395-5
8839	National	DS8839	2889-19
			¶ 395-5
883C21C16			
	SSS	883C21C16-45	3837-58
		883C21C16-55	3837-78
		883C21C16-70	3837-94
883C23C32			
	SSS	883C23C32M	3849-99
883C23C33			
	SSS	883C23C33M	3849-100
883C23C64			
	SSS	883C23C64M	3851-16
883C4000			
	SSS	883C4000B	827-5
883C4001			
	SSS	883C4001B	827-180
		883C4001UB	827-181
883C4002			
	SSS	883C4002B	827-53
883C4006			
	SSS	883C4006B	836-194
			3855-61
883C4007			
	SSS	883C4007UB	810-171
883C4008			
	SSS	883C4008B	806-71
883C4009			
	SSS	883C4009UB	809-3
883C4010			
	SSS	883C4010B	809-59
883C4011			
	SSS	883C4011B	825-110
		883C4011UB	825-111
883C4012			
	SSS	883C4012B	824-163
883C4013			
	SSS	883C4013B	820-70
883C4014			
	SSS	883C4014B	836-137
			3856-33
883C4015			
	SSS	883C4015B	835-5
			3855-40
883C4016			
	SSS	883C4016B	2824-35
883C4017			
	SSS	883C4017B	814-105
883C4018			
	SSS	883C4018B	816-112
883C4019			
	SSS	883C4019B	826-18
883C4020			
	SSS	883C4020B	814-6
883C4021			
	SSS	883C4021B	835-134
			3856-34
883C4022			
	SSS	883C4022B	816-87
883C4023			
	SSS	883C4023B	825-37
883C4024			
	SSS	883C4024B	813-68
883C4025			
	SSS	883C4025B	827-106
883C4026			
	SSS	883C4026AB	814-50
883C4027			
	SSS	883C4027B	823-51
883C4028			
	SSS	883C4028B	817-47
883C4029			
	SSS	883C4029B	816-131
883C4030			
	SSS	883C4030B	828-85
883C4033			
	SSS	883C4033AB	814-64
883C4034			
	SSS	883C4034B	835-152
			3855-104
883C4035			
	SSS	883C4035B	835-84
			3855-10
883C4040			
	SSS	883C4040B	813-156
883C4041			
	SSS	883C4041UB	808-121
883C4042			
	SSS	883C4042B	829-49
883C4043			
	SSS	883C4043B	829-86
883C4046			
	SSS	883C4046B	837-125
			3375-60
883C4047			
	SSS	883C4047B	833-181
883C4049			
	SSS	883C4049UB	809-47
883C4050			
	SSS	883C4050B	809-92
883C4051			
	SSS	883C4051B	2830-141

¶ Indicates page number in Application Note Directory.
★ Indicates additional data is provided on the page noted.

Base Number	Source	Device	Page-Line
883C4052	SSS	883C4052B	2830-38
883C4053	SSS	883C4053B	2826-68
883C4060	SSS	883C4060B	814-37
883C4066	SSS	883C4066B	2824-26
883C4068	SSS	883C4068B	825-182
883C4069	SSS	883C4069UB	811-71
883C4070	SSS	883C4070B	828-86
883C4071	SSS	883C4071B	826-171
883C4072	SSS	883C4072B	826-82
883C4073	SSS	883C4073B	824-40
883C4075	SSS	883C4075B	826-119
883C4076	SSS	883C4076B	820-172
883C4077	SSS	883C4077B	828-127
883C4078	SSS	883C4078B	828-15
883C4081	SSS	883C4081B	824-98
883C4082	SSS	883C4082B	823-187
883C4085	SSS	883C4085B	826-38
883C4086	SSS	883C4086B	826-65
883C4093	SSS	883C4093B	838-174
883C4094	SSS	883C4094B	835-172
			3856-81
883C4099	SSS	883C4099B	831-26
883C4160	SSS	883C4160B	815-20
883C4161	SSS	883C4161B	812-31
883C4162	SSS	883C4162B	814-154
883C4163	SSS	883C4163B	811-167
883C4174	SSS	883C4174B	821-42
883C4192	SSS	883C4192B	815-74
883C4193	SSS	883C4193B	812-108
883C4402	SSS	883C4402B	828-149
883C4404	SSS	883C4404B	813-115
883C4412	SSS	883C4412B	824-169
883C4416	SSS	883C4416B	2824-40
883C4426	SSS	883C4426AB	814-51
883C4428	SSS	883C4428B	817-172
883C4433	SSS	883C4433AB	814-65
883C4441	SSS	883C4441UB	808-105
883C4445	SSS	883C4445B	834-132
883C4446	SSS	883C4446B	837-126
			3375-61
883C4449	SSS	883C4449UB	811-72
883C4502	SSS	883C4502B	809-14
883C4508	SSS	883C4508B	829-13
883C4510	SSS	883C4510B	815-75
883C4511	SSS	883C4511B	819-166
			2875-166

Base Number	Source	Device	Page-Line
883C4512	SSS	883C4512B	833-69
883C4514	SSS	883C4514B	818-204
883C4515	SSS	883C4515B	818-205
883C4516	SSS	883C4516B	812-109
883C4517	SSS	883C4517B	835-18
			3857-13
883C4518	SSS	883C4518B	816-4
883C4520	SSS	883C4520B	812-169
883C4522	SSS	883C4522B	815-104
883C4526	SSS	883C4526B	812-131
883C4527	SSS	883C4527B	838-44
883C4528	SSS	883C4528B	834-94
883C4531	SSS	883C4531B	842-110
883C4532	SSS	883C4532B	842-81
883C4534	SSS	883C4534B	819-102
			2876-8
883C4555	SSS	883C4555B	817-67
883C4556	SSS	883C4556B	817-81
883C4581	SSS	883C4581B	807-5
883C4582	SSS	883C4582B	807-24
883C4584	SSS	883C4584B	839-50
883C4585	SSS	883C4585B	807-66
883C5101	SSS	883C5101-4	3834-3
8840	**Fujitsu**	**MB8840**	★**1611**
	Mitel	MT8840	3380-75
	National	DM8840	¶ 361-11
	Ziatech	ZT 8840	2040-52
88400	**Fujitsu**	**MB88400**	★**1611**
88401	Fujitsu	MB88401	1450-54
			1405-13
8841	Fujitsu	MB8841	1450-40
			¶ 369-2
			1405-14
88410	**Fujitsu**	**MB88410**	★**1611**
88411	Fujitsu	MB88411	1450-55
			1405-15
88413	Fujitsu	MB88413	1450-56
			1405-16
8842	Fujitsu	MB8842	1450-41
			1405-17
	National	DM8842	¶ 359-12
			¶ 361-11
88420	**Fujitsu**	**MB88420**	★**1611**
88421	Fujitsu	MB88421	1450-57
			1405-18
88423	Fujitsu	MB88423	1450-58
			1405-19
8843	Fujitsu	MB8843	1450-42
			1405-20
8844	Fujitsu	MB8844	1450-43
			1405-21
8845	Fujitsu	MB8845	1450-44
	Ziatech	ZT8845	2040-58
8846	Fujitsu	MB8846	1450-45
	National	DM8846	¶ 361-11
8847	Fujitsu	MB8847	1450-46
	Ziatech	ZT8847	2039-20
8848	Fujitsu	MB8848	1450-47
	Ziatech	ZT8848	2039-24
8849	Fujitsu	MB8849	1450-48
8850	**Fujitsu**	**MB8850**	★**1611**
	Ziatech	ZT8850	2039-9
88500	**Fujitsu**	**MB88500**	★**1611**
	Mitel	MH88500	3381-62
88501	Fujitsu	MB88501	1450-59
			1405-22

Base Number	Source	Device	Page-Line
88503	Fujitsu	MB88503	1450-60
			1405-23
8851	Fujitsu	MB8851	1450-31
			1405-24
		MB8851A	1450-32
			1405-25
		MB8851L	1450-33
			1405-26
8853	Fujitsu	MB8853	1450-34
			1405-27
88535	Fujitsu	MB88535	1450-61
			1405-28
88536	Fujitsu	MB88536	1450-62
			1405-29
8854	Fujitsu	MB8854	1405-30
		MB8854A	1450-35
			1405-32
		MB8854L	1450-36
			1405-33
88540	**Fujitsu**	**MB88540**	★**1611**
88541	Fujitsu	MB88541	1450-63
			1405-31
8855	Fujitsu	MB8855	1450-37
8856	National	DS8856	2875-82
			¶ 398-1
8857	Fujitsu	MB8857	1450-38
	National	DS8857	2876-12
			¶ 398-1
8858	Fujitsu	MB8858	1450-39
	National	DS8858	2876-15
			¶ 398-1
8859	National	DS8859	2876-38
8860	GTEMicro	G8860X	3381-136
	Mitel	MT8860	3381-121
			¶ 410-16
	Plessey	MV8860	3381-124
8861	National	DS8861	¶ 398-1
8862	Mitel	MT8862	3381-122
			¶ 410-16
	Plessey	MV8862	3381-125
8863	Mitel	MT8863	3381-123
			¶ 410-16
	National	DS8863	2877-32
			¶ 398-1
	Plessey	MV8863	3381-126
8864	National	DS8864	2877-70
			¶ 398-1
8865	GTEMicro	G8865X	3377-28
	Mitel	MT8865	3377-17
			¶ 410-14
			¶ 410-16
	National	DS8865	¶ 398-1
	Plessey	MV8865	3377-29
8866	Fujitsu	MB8866	1461-27
			1467-34
	National	DS8866	¶ 398-1
8867	National	DS8867	2877-65
8868	**Fujitsu**	**MB8868A**	★**1611**
			2901-86
8869	National	DS8869	2876-39
8870	**GTEMicro**	**G8870**	★**3594**
			3382-5
	Mitel	MT8870	¶ 410-14
			¶ 410-17
		MT8870-1	3380-117
		MT8870B	3382-7
	National	DS8870	2876-139
8871	National	DS8871	2877-33
8872	National	DS8872	2877-66
8874	National	DS8874	2877-71
8875	National	DM8875	855-144
8876	**Fujitsu**	**MB8876A**	★**1611**
			1453-115
			1466-110
			¶ 379-4
8877	**Fujitsu**	**MB8877A**	★**1611**
			1453-116
			1466-111
			¶ 379-4
	National	DS8877	2876-140
888	Intech	VDAC888E	2855-48
		VDAC888T	2855-49
	National	NSC888	2013-1
	PMI	**DAC-888A**	★**3637**
			2851-27
		DAC-888B	★**3637**
			(Continued)

Base Number	Source	Device	Page-Line
888	PMI	DAC-888B	2852-42
		DAC-888E	★**3637**
			2851-28
		DAC-888F	★**3637**
			2852-43
8880	Mitel	MT8880	3382-8
	National	DS8880	2877-15
			¶ 397-18
	Signetics	DS8880	2877-17
8881	National	DS8881	2877-88
	Signetics	8881	2877-89
		N8881	★**1175**
			871-145
8882	Ziatech	ZT8882	2042-37
8884	National	DS8884A	2877-16
			¶ 397-18
8885	National	DS8885	¶ 397-18
8887	National	DS8887	¶ 397-18
8889	National	DS8889	2877-62
			¶ 397-18
8890	**Signetics**	**N8890**	★**1175**
			857-82
8891	National	DS8891	2876-132
	Signetics	8891	2876-133
		N8891	★**1175**
			857-83
		S8891	857-84
8897	National	DS8897	2877-31
8898	National	DM8898	887-88
8899	National	DM8899	887-81
88C120	National	DS88C120	2886-48
88C20	National	DS88C20	2887-10
88C29	National	MM88C29	838-140
			2884-2
88C30	National	MM88C30	838-48
			2883-19
88C681	EXEL	XL88C681	2900-59
			1462-4
			1462-89
88H04	**Dense-Pac**	**DPS88H04**	★**4008**
			3842-105
88H08	**Dense-Pac**	**DPS88H08**	★**4008**
			3842-118
88H16	**Dense-Pac**	**DPS88H16**	★**4008**
			3845-107
88L12	National	DS88L12	886-144
88LS120	National	DS88LS120	2886-46
89	**PMI**	**DAC-89E**	★**3637**
			2856-8
			2859-75
	Siemens	S89	890-73
890	Signetics	TBA890	3326-25
8900	National	INS8900	¶ 440-9
8901	Plessey	SP8901	891-57
			3375-106
			3376-92
	Siliconix	**SI8901A**	★**3248**
			★**3252**
			3403-137
8906	National	DS8906	3375-125
	Plessey	SP8906	891-42
			3375-107
			3376-91
8907	National	DS8907	3375-126
8908	National	DS8908	3375-127
8910	GI	AY3-8910A	3319-81
			3327-112
			1468-50
	National	DS8910	3321-19
8912	GI	AY3-8912A	3319-82
			3327-113
			1468-51
	GTEMicro	G8912B	3379-62
8913	GI	AY3-8913	3319-89
			1468-12
8915	DDC	HSDC-8915	3403-108
8916	DDC	HSDC-8916	3403-109
8917	DDC	HSDC-8917	3403-110
8918	DDC	HSDC-8918	3403-111
8919	DDC	HSDC-8919	3403-112
8920	DDC	HSDC-8920	3403-113
8921	DDC	HSDC-8921	3403-114
8922	DDC	HSDC-8922	3403-115
8930	GI	AY8930	1466-94
8931	GI	AY8931	1466-95

Arranged alphanumerically from left to right.

Base Number	Source	Device	Page-Line
89311	**Fujitsu**	**MB89311**	★ **1611**
			1466-107
89321	**Fujitsu**	**MB89321**	★ **1611**
			1455-1
89322	**Fujitsu**	**MB89322**	★ **1611**
			1457-130
8937	DDC	BUS-8937	2900-57
8940	Mitel	MT8940	3379-28
8942	Sanyo	LM8942	891-92
8950	Mitel	MT8950	3377-136
8953	Mitel	MT8953	3379-13
8960	Mitel	MT8960	3377-126
8961	Mitel	MT8961	3377-65
8962	Mitel	MT8962	3377-127
89620	Mitel	MH89620	3381-63
8963	Mitel	MT8963	3377-66
	National	DS8963	2877-34
89630	Mitel	MH89630	3377-41
8964	Mitel	MT8964	3377-128
8965	Mitel	MT8965	3377-67
8970	Mitel	MT8970	3379-14
			¶ 411-10
			¶ 412-7
89700	Mitel	MH89700	3379-18
			¶ 411-10
			¶ 411-11
			¶ 411-12
			¶ 412-7
8972	Mitel	MT8972	3379-15
			¶ 412-8
	Sanyo	LM8972	3320-154
8973	National	DS8973	2877-67
8975	Mitel	MT8975	3379-26
	National	DS8975	2877-68
89750	Mitel	MH89750	3379-27
89755	Mitel	MH89755	3379-29
8978	Mitel	MT8978	3379-25
89780	Mitel	MH89780	3379-23
89785	Mitel	MH89785	3379-24
8980	GouldAMI	S8980	3379-20
	Mitel	MT8980	3379-22
	National	DS8980	¶ 397-18
8981	Mitel	MT8981	3379-21
			1455-6
	National	DS8981	¶ 397-18
8A1200	Signetics	8A1200	4455-16
			4455-18
			¶ 357-8
8A1260	Signetics	8A1260	4455-17
			4455-19
			¶ 357-8
8A1542	Signetics	8A1542	4455-22
			4455-23
			¶ 357-8
8A1664	Signetics	8A1664	4455-24
			4455-25
8A1864	Signetics	8A1864	4455-27
			4455-28
8A2176	Signetics	8A2176	4455-31
			4455-32
8C49	**Fujitsu**	**MBL8C49**	★ **1611**
8C901	Cypress	CY8C901-69C	1405-10
8L14	**MMI**	**PAL8L14AC**	★ **4682**
			4470-35
8L48	**Raytheon**	**CGA8L48**	★ **700**
			★ **4740**
			4454-1
8M464	**IDT**	**IDT8M464S-100B**	
			★ **4065**
			3845-97
		IDT8M464S-55	★ **4065**
			3845-54
		IDT8M464S-65	★ **4065**
			3845-56
		IDT8M464S-65B	
			★ **4065**
			3845-57
		IDT8M464S-85	★ **4065**
			3845-94
		IDT8M464S-85B	
			★ **4065**
			3845-95
8M864	**IDT**	**IDT8M864-120**	★ **4064**
			3843-36
		IDT8M864-120B	
			★ **4064**
			(Continued)
8M864	IDT	IDT8M864-120B	3843-52
		IDT8M864-150	★ **4064**
			3843-61
		IDT8M864-150B	
			★ **4064**
			3843-62
		IDT8M864-200	★ **4064**
			3843-86
		IDT8M864-200B	
			★ **4064**
			3843-87
		IDT8M864-85	★ **4064**
			3843-11
		IDT8M864L-65	★ **4064**
			3842-136
		IDT8M864L-75	★ **4064**
			3843-8
		IDT8M864L-75B	
			★ **4064**
			3843-9
		IDT8M864L-85B	
			★ **4064**
			3843-13
8P4	MMI	PLE8P4C	4474-10
		PLE8P4M	4474-11
8P8	MMI	PLE8P8C	4474-12
		PLE8P8M	4474-13
8T04	Signetics	S8T04	2875-96
8T05	Signetics	S8T05	2875-83
8T09	Raytheon	RC8T09	864-16
		RM8T09	864-17
	Signetics	**N8T09**	★ **1175**
			864-18
			2881-25
		S8T09	864-19
			2881-26
8T10	**Signetics**	**N8T10**	★ **1175**
			866-9
		S8T10	866-10
8T125	**Signetics**	**N8T125**	★ **1175**
			885-20
			2891-2
		S8T125	885-21
			2891-3
8T126	**Signetics**	**N8T126**	★ **1175**
			888-59
			2888-57
		S8T126	888-62
			2888-60
8T127	**Signetics**	**N8T127**	★ **1175**
			888-60
			2888-58
		S8T127	888-63
			2888-61
8T128	**Signetics**	**N8T128**	★ **1175**
			888-73
			2889-6
		S8T128	888-76
			2889-9
8T129	**Signetics**	**N8T129**	★ **1175**
			888-74
			2889-7
		S8T129	888-77
			2889-10
8T13	**Signetics**	**N8T13**	★ **1175**
			2881-6
		S8T13	2881-7
8T15	**Signetics**	**N8T15**	★ **1175**
			2881-15
8T16	**Signetics**	**N8T16**	★ **1175**
			2885-6
		S8T16	2885-7
8T20	Raytheon	RC8T20	880-90
		RM8T20	880-91
	Signetics	**N8T20**	★ **1175**
			880-92
8T22	**Signetics**	**N8T22**	★ **1175**
8T23	**Signetics**	**N8T23**	★ **1175**
			2881-2
8T24	**Signetics**	**N8T24**	★ **1175**
			2885-11
8T245	**Signetics**	**N8T245**	★ **1175**
			885-121
		S8T245	885-122
8T26	**Motorola**	**MC8T26A**	★ **3210**
			888-56
			(Continued)
8T26	Motorola	MC8T26A	2888-54
			1452-139
	National	DS8T26A	888-57
			2888-55
			1452-141
		DS8T26AM	888-58
			2888-56
	Signetics	8T26A	¶ 373-8
		N8T26A	★ **1175**
			888-61
			2888-59
		S8T26A	888-64
	TI	N8T26	888-65
		N8T26A	888-66
8T28	AMD	N8T28	888-68
	Motorola	**MC8T28**	★ **3210**
			888-70
			2889-3
			1452-140
	National	DS8T28	888-71
			2889-4
			1452-142
		DS8T28M	888-72
			2889-5
	Signetics	8T28	¶ 373-8
		N8T28	★ **1175**
			888-75
			2889-8
		S8T28	888-78
8T31	Signetics	N8T31	888-114
			1457-456
8T32	Signetics	N8T32	888-115
			1457-459
		S8T32	888-118
			1457-464
8T33	Signetics	N8T33	888-116
			1457-460
		S8T33	888-119
			1457-465
8T34	**Signetics**	**N8T34**	★ **1175**
			2889-17
8T3404	Signetics	N8T3404	875-123
8T35	Signetics	S8T35	888-120
			1457-453
8T36	Signetics	N8T36	888-117
			1457-451
		S8T36	888-121
			1457-454
8T37	**Signetics**	**N8T37**	★ **1175**
			2885-55
8T38	**Signetics**	**N8T38**	★ **1175**
			2888-3
8T380	**Signetics**	**N8T380**	★ **1175**
			887-139
8T39	Signetics	S8T39	888-122
8T80	Signetics	S8T80	864-46
8T90	Signetics	S8T90	857-144
8T95	**Motorola**	**MC8T95**	★ **3209**
			857-36
			1452-143
	Signetics	8T95	¶ 373-8
		N8T95	★ **1175**
			857-38
			1452-147
		S8T95	1452-151
8T96	**Motorola**	**MC8T96**	★ **3209**
			858-46
			1452-144
	Signetics	**N8T96**	★ **1175**
			858-48
			1452-148
8T97	**Motorola**	**MC8T97**	★ **3209**
			857-37
			1452-145
	Signetics	**N8T97**	★ **1175**
			857-39
			1452-149
		S8T97	857-40
			1452-152
8T98	**Motorola**	**MC8T98**	★ **3209**
			858-47
			1452-146
	Signetics	**N8T98**	★ **1175**
			858-49
			1452-150
			(Continued)
8T98	Signetics	S8T98	858-50
			1452-153
8TS805	Signetics	N8TS805	876-26
		S8TS805	876-27
8TS806	Signetics	N8TS806	866-102
		S8TS806	876-28
8TS807	Signetics	N8TS807	876-76
8TS808	Signetics	N8TS808	866-103
8X01	Signetics	8X01A	2878-7
		N8X01A	886-157
8X02	Signetics	8X02	¶ 375-18
			¶ 377-12
		N8X02A	887-52
8X300	**Signetics**	**8X300**	★ **1742**
			1429-42
			¶ 381-7
		N8X300	1457-443
		S8X300-1	1457-445
		S8X300-2	1457-446
8X300KT100			
	Signetics	8X300KT100SK	2013-36
8X305	Signetics	8X305	1429-43
			¶ 382-17
		N8X305	1457-444
		S8X305	1457-447
8X310	Signetics	N8X310	1457-471
		S8X310	1457-472
8X320	Signetics	N8X320	887-25
			1457-470
8X330	Signetics	8X330	¶ 379-3
		N8X330	1457-450
8X350	**Signetics**	**N8X350**	★ **4166**
			3834-9
			1457-479
		S8X350	3834-10
			1457-480
8X353	Signetics	N8X353	1457-477
		S8X353	1457-478
8X355	Signetics	N8X355	1457-473
		S8X355	1457-474
8X360	**Signetics**	**N8X360**	★ **1744**
			1457-475
		S8X360	1457-476
8X371	Signetics	N8X371	1457-457
		S8X371	1457-458
8X372	Signetics	N8X372	1457-461
		S8X372	1457-466
8X374	Signetics	N8X374	1457-468
		S8X374	1457-469
8X376	Signetics	N8X376	1457-452
		S8X376	1457-455
8X382	Signetics	N8X382	1457-462
		S8X382	1457-467
8X401	**Signetics**	**N8X401**	★ **1745**
8X41	**Signetics**	**N8X41**	★ **1193**
			886-148
			1465-33
			1469-85
8X42	Signetics	N8X42	1457-463
8X450	**Signetics**	**N8X450**	★ **1746**
8X470	**Signetics**	**N8X470**	★ **1747**
8X60	**Signetics**	**8X60**	★ **4174**
			3810-59
		N8X60	887-16
			2892-36
			1457-448
		S8X60	2892-37
			1457-449
9	Apex	PA9	3331-75
	Interdesign	ULA9C	4443-44
			4443-46
		ULA9N	4443-47
			4443-48
		ULA9RA	4443-8
		ULA9RB	4443-9
		ULA9RC	4443-11
		ULA9RD	4443-15
	Matrix	CP9	2019-6
		MF9	2019-7
		TS9	2019-8
	Supertex	ED-9	¶ 400-1
		ED9	838-9
			¶ 399-16
	Xicor	X9MME	3401-86
90	**Burr-Brown**	**DAC90B**	★ **3147**
			2852-39
			(Continued)

¶ Indicates page number in Application Note Directory.
★ Indicates additional data is provided on the page noted.

Base Number	Source	Device	Page-Line
90	**Burr-Brown**	**DAC90S**	★**3147**
			2852-4
	Heurikon	MLZ-90	2009-17
	InnovRes	SBC-90A	2009-26
	Quay	90MPS	2013-11
900	AnalogSys	MI900	3400-69
	ArrayTech	DHS900	4439-21
	CalDevices	**DLM900**	★**4605**
			4440-27
	Cherry	IC900	3367-5
	Matrox	SX-900	2034-18
	Miller	MCPU-900	2017-10
	SGS	TCA900	¶ 420-14
	Signetics	ACE900	4455-11
	Stynetic	TDS900	2007-8
	TeledyneS	TSC900A	3335-20
		TSC900B	3335-30
	Unitrode	PIC900	2895-101
			¶ 398-15
	Vatic	**VL900**	★**4804**
			4465-19
9000	**AD**	**AD9000J**	★**3121**
			2832-12
		AD9000S	★**3121**
			2832-13
	Fairchild	9000M	867-92
	TI	**SBR9000**	★ **731**
90000	**OKI**	**MSM90000**	★**4733**
			4481-4
9001	AD	A9001	844-2
	Fairchild	9001C	867-93
		9001M	867-94
9002	National	DM9002C	870-188
9004	SMC	COM9004	2900-83
9006	National	DM9006C	872-134
	SMC	CRT9006	¶ 381-1
		CRT9006-135	1465-80
		CRT9006-83	1465-81
9007	SMC	CRT9007	¶ 381-1
			¶ 381-8
		CRT9007A	1466-34
		CRT9007B	1466-35
		CRT9007C	1466-36
9008	Western	CP9008	1437-22
901	Burr-Brown	MPV901	2044-15
		MPV901A	2044-21
		MPV901P	2044-22
	DataTrans	DT901/901-I	2030-4
9016	AMD	AM9016C	3826-92
		AM9016D	3826-81
		AM9016E	3826-67
		AM9016F	3826-55
	National	MM9016	3324-105
9021	SMC	CRT9021	¶ 381-1
		CRT9021B	1466-21
9022	Sharp	IR9022	3365-44
9024	Fairchild	9024C	867-102
		9024M	867-103
9026	SMC	COM9026	1458-21
			¶ 379-16
			¶ 383-6
			¶ 383-11
9028	GI	AY9028	1468-73
	SMC	CRT9028	1466-45
			¶ 378-10
903	National	LM903	3400-70
9032	SMC	COM9032	1458-22
			¶ 383-6
9034	SMC	SCF9034	3379-55
904	Burr-Brown	MPV904	2044-18
9041	SMC	CRT9041A	1466-17
		CRT9041B	1466-18
		CRT9041C	1466-19
9044	AMD	AM9044B	3840-104
		AM9044BM	3840-105
		AM9044CM	3840-86
		AM9044D	3840-63
		AM9044DM	3840-64
		AM9044E	3840-57
9046	SMC	COM9046	3323-119
905	Burr-Brown	MPV905	2044-17
9053	SMC	CRT9053	1466-46
9064	MicronTech	MT9064-12	3828-30
		MT9064-15	3828-49
		MT9064-20	3828-54
9065	MicronTech	MT9065	3828-45
			3828-48
			3828-53
908	Kontron	KDS-908-04	1815-18
9080	AMD	9080A	¶ 377-6
		AM9080A	1411-27
		AM9080A-1	1457-64
		AM9080A-2	1457-65
	LSILogic	LL9080	4449-45
909	Harris	HA-909	¶ 406-11
			¶ 406-12
9093	**Fairchild**	**9093**	★ **618**
9099	**Fairchild**	**9099**	★ **618**
90C255	AMD	AM90C255-10	3828-78
		AM90C255-12	3828-101
		AM90C255-15	3829-26
90C256	AMD	AM90C256-10	3828-79
		AM90C256-12	3828-102
		AM90C256-15	3829-27
90C257	AMD	AM90C257-10	3828-80
		AM90C257-12	3828-103
		AM90C257-15	3829-28
90L44	AMD	AM90L44B	3840-106
		AM90L44BM	3840-107
		AM90L44C	3840-87
		AM90L44CM	3840-88
		AM90L44D	3840-65
91	Heurikon	MLZ-91A	2009-21
910	**Motorola**	**MVME910**	★**2112**
	SGS	TCA910	2896-5
			¶ 420-14
9100	Cadnetix	CDX-9100	4906-3
		CDX9100	★**5102**
	Tex/CAE	**DAS9100**	★**5114**
			5032-2
	LogicalDes	VME-9100D	2044-31
	Siliconix	**SI9100**	★**3260**
			3396-120
91000	GI	RO91000B	3853-105
		RO91000C	3853-97
		RO91000CS	3853-102
		RO91000DS	3853-90
		ROC91000	3853-81
	LSILogic	**LL91000**	★**4676**
			4450-27
	OKI	**MSM91000**	★**4733**
			4481-3
91001	GI	RO91001	3853-38
91002	GI	RO91002	3852-74
91009	Fairchild	91009C	886-142
9101	AMD	AM9101A	3833-115
		AM9101AM	3833-116
		AM9101B	3833-95
		AM9101BM	3833-96
		AM9101C	3833-77
		AM9101CM	3833-78
		AM9101D	3833-69
9102	Plessey	MN9102	¶ 357-14
9103	**Xicor**	**X9103**	★**4281**
			3401-74
9104	**Xicor**	**X9104**	★**4281**
			3401-75
9105	Plessey	MN9105	¶ 357-14
	Xicor	**X9105**	★**4281**
			3401-76
9106	Plessey	MN9106	¶ 357-14
	Toshiba	TC9106B	3375-133
9107	Plessey	MN9107	¶ 357-14
9108	Plessey	MN9108	¶ 357-14
9109	**Fairchild**	**9109**	★ **618**
	Toshiba	TC9109B	3375-134
911	Harris	HA-911	¶ 406-11
			¶ 406-12
	TeledyneS	TSC911	3335-29
9111	AMD	AM9111A	3833-117
		AM9111AM	3833-118
		AM9111B	3833-97
		AM9111BM	3833-98
		AM9111C	3833-79
		AM9111CM	3833-80
		AM9111D	3833-70
	Toshiba	TC9111B	3375-135
9112	AMD	AM9112A	3833-111
		AM9112AM	3833-112
		AM9112B	3833-99
		AM9112BM	3833-100
			(Continued)
9112	AMD	AM9112C	3833-81
		AM9112CM	3833-82
		AM9112D	3833-71
	Fairchild	**9112**	★ **618**
9114	AMD	AM9114B	3836-119
		AM9114BM	3836-120
		AM9114C	3836-95
		AM9114CM	3836-96
		AM9114E	3836-63
		AM9114EM	3836-64
91160	IMI	G91160	4449-27
9118	TI	TMS9118	1466-26
912	OKI	MSL912R	2877-49
9120	GI	RO9120	3851-99
	S-MOS	STC9120C	3380-72
9121	Toshiba	TC9121	3324-16
9122	AMD	AM9122-25	3833-9
		AM9122-35	3833-16
		AM9122-35M	3833-17
	Cypress	CY9122-25C	3833-8
		CY9122-35C	3833-14
		CY9122-45C	3833-27
	Toshiba	TC9122	816-25
91230	UMC	UM91230	3378-137
9124	AMD	AM9124	¶ 439-9
		AM9124B	3836-121
		AM9124BM	3836-122
		AM9124C	3836-97
		AM9124CM	3836-98
9128	AMD	AM9128-10	3838-3
		AM9128-12M	3838-38
		AM9128-15M	3838-88
		AM9128-20	3839-18
		AM9128-20M	3839-19
		AM9128-70	3837-97
	GI	AY9128	1468-74
		RO9128B	3852-58
		RO9128C	3852-44
		RO9128D	3852-2
	MicronTech	MT9128	3828-69
			3828-70
			3828-71
	SMC	CRT9128	1466-47
	TI	TMS9128	1466-27
9129	TI	TMS9129	1466-28
9130	AMD	AM9130A	3837-6
		AM9130AM	3837-7
		AM9130B	3836-113
		AM9130BM	3836-114
		AM9130C	3836-109
		AM9130CM	3836-110
		AM9130D	3836-85
		AM9130E	3836-77
	Toshiba	TC9130	838-26
91308	Sharp	IR91308	3355-58
9132	Toshiba	TC9132	3323-87
9134	Toshiba	TC9134	3323-88
9135	Toshiba	TC9135	838-27
9137	Toshiba	TC9137B	3325-86
9138	Toshiba	TC9138A	3324-10
9139	Toshiba	TC9139A	3324-11
9140	AMD	AM9140A	3840-112
		AM9140AM	3840-113
		AM9140B	3840-99
		AM9140BM	3840-100
		AM9140C	3840-95
		AM9140CM	3840-96
		AM9140D	3840-74
		AM9140E	3840-61
	LSILogic	**LL9140**	★**4676**
			4450-5
	Toshiba	TC9140	3321-68
9142	Toshiba	TC9142	3316-148
9143	Toshiba	TC9143	3324-18
9144	Toshiba	TC9144	3324-19
91458	Sharp	IR91458	3366-56
9146	Toshiba	TC9146	3321-69
9147	Toshiba	TC9147	3321-70
9148	Toshiba	TC9148	3323-89
9149	Toshiba	TC9149	3323-90
915	OKI	MSL915R	2877-50
	Signetics	TDA915	3318-69
9150	AMD	AM9150-20	3835-47
		AM9150-25	3835-57
		AM9150-35	3835-76
		AM9150-35M	3835-77
			(Continued)
9150	AMD	AM9150-45	3835-103
		AM9150-45M	3835-104
	Cadnetix	CDX-9150	4907-1
		CDX9150	★**5102**
	Toshiba	TC9150	3323-91
9151	AMD	AM9151-40	3835-78
		AM9151-50	3835-106
		AM9151-50M	3835-107
		AM9151-60	3836-17
		AM9151-60M	3836-18
	GI	AY5-9151A	3378-71
		AY5-9151B	3378-72
	UMC	UM9151	3378-68
		UM9151-2	3378-69
9152	UMC	UM9152	3380-110
9153	SMC	CRT9153	1466-48
	Toshiba	TC9153	3319-105
91531	UMC	UM91531	3382-56
9154	Toshiba	TC9154	3319-103
9155	Toshiba	TC9155	3319-99
9156	Toshiba	TC9156	3319-98
9158	Toshiba	TC9158	3321-109
9159	Toshiba	TC9159	3321-110
916	OKI	MSL916R	2877-51
9160	Toshiba	TC9160	3383-8
	UMC	UM9160	3378-136
91603	UMC	T91603	3378-133
9161	UMC	UM9161	3379-30
91610	UMC	UM91610	3378-131
91611	UMC	UM91611	3378-132
9162	Toshiba	TC9162	2895-58
9163	Toshiba	TC9163	2895-59
9164	Toshiba	TC9164	2895-60
9165	Toshiba	TC9165	3324-7
9166	Toshiba	TC9166	3324-9
9167	Toshiba	TC9167	3324-8
9169	Toshiba	TC9169	3316-136
	UMC	UM9169A	3382-105
917	OKI	MSL917R	2877-52
9170	Toshiba	TC9170	3316-135
91764	IMI	G91764	4449-32
918	TeledyneS	TSC918	3338-32
91L01	AMD	AM91L01A	3833-119
		AM91L01AM	3833-120
		AM91L01B	3833-101
		AM91L01BM	3833-102
		AM91L01C	3833-83
		AM91L01CM	3833-84
91L11	AMD	AM91L11A	3833-121
		AM91L11B	3833-103
		AM91L11BM	3833-104
		AM91L11CM	3833-85
91L12	AMD	AM91L12A	3833-113
		AM91L12AM	3833-114
		AM91L12B	3833-105
		AM91L12BM	3833-106
		AM91L12C	3833-86
		AM91L12CM	3833-87
91L14	AMD	AM91L14B	3836-123
		AM91L14BM	3836-124
		AM91L14C	3836-99
		AM91L14CM	3836-100
		AM91L14E	3836-65
		AM91L14EM	3836-66
91L22	AMD	AM91L22-35	3833-18
		AM91L22-45	3833-32
		AM91L22-45M	3833-33
		AM91L22-60	3833-47
	Cypress	CY91L22-35C	3833-11
		CY91L22-45C	3833-28
91L24	AMD	AM91L24B	3836-125
		AM91L24BM	3836-126
		AM91L24C	3836-101
		AM91L24CM	3836-102
91L30	AMD	AM91L30A	3837-8
		AM91L30AM	3837-9
		AM91L30B	3836-115
		AM91L30BM	3836-116
		AM91L30C	3836-111
		AM91L30CM	3836-112
91L40	AMD	AM91L40A	3840-114
		AM91L40AM	3840-115
		AM91L40B	3840-101
		AM91L40BM	3840-102
		AM91L40C	3840-97
		AM91L40CM	3840-98

Arranged alphanumerically from left to right.

Base Number	Source	Device	Page-Line
91M2	Harris	HM91M2	3847-87
			3847-103
92	Heurikon	MLZ-92A	2009-22
920	**Motorola**	**MVME920**	★**2113**
	Plessey	ML920	3323-46
	RCA	CA920A	3325-129
	ThomsonCSF	TBA920	3325-138
9200	Cadnetix	CDX-9200	4907-2
		CDX9200	★**5102**
9201	Exar	XR9201	2853-11
	NEC	μPB9201	1467-74
9203	**Xicor**	**X9203**	★**4281**
			3401-77
9204	**Xicor**	**X9204**	★**4281**
			3401-78
921	**Motorola**	**MVME921**	★**2113**
921000	Sharp	LZ921000	4454-40
9212	SMC	CRT9212	1466-87
			¶ 381-1
92128	AMD	AM92128B	3852-57
		AM92128C	3852-43
		AM92128D	3852-23
		AM92128E	3852-1
921500	Sharp	LZ921500	4454-41
9216	SMC	FDC9216	1467-66
			¶ 379-1
		FDC9216B	1467-67
	Western	WD9216-00	1467-70
		WD9216-01	1467-71
9218	AMD	AM9218B	3849-56
		AM9218C	3849-51
922	**Motorola**	**MVME922**	★**2113**
	Plessey	ML922	3323-47
9220	**LSILogic**	**LL9220**	★**4676**
			4450-10
922200	Sharp	LZ922200	4454-42
9224	SMC	HDC9224	1468-93
9225	SMC	HDC9225	2894-14
			1466-63
92256	AMD	AM92256C	3853-13
		AM92256D	3852-126
		AM92256E	3852-99
9226	SMC	HDC9226	1468-84
9229	SMC	FDC9229	1467-75
		FDC9229B	1467-76
923	Plessey	ML923	3323-48
92300	Sharp	LZ92300	4454-36
923000	Sharp	LZ923000	4454-43
9232	AMD	AM9232C	3849-103
		AM9232D	3849-89
9233	AMD	AM9233BC	3850-3
		AM9233BM	3850-4
		AM9233C	3849-104
		AM9233D	3849-90
9239	SMC	FDC9239	1467-77
924	Plessey	ML924	3323-49
924000	Sharp	LZ924000	4455-1
92450	Sharp	LZ92450	4454-37
925000	Sharp	LZ925000	4455-2
9256	GI	R09256B	3824-84
		R09256CS	3824-80
		R09256D	3824-28
		R09256DS	3824-54
	MicronTech	MT9256	3830-16
			3830-24
			3830-32
92560	**Harris**	**HM92560**	★**4027**
			3846-11
			3846-60
		HM92560-5	★**4027**
			3846-16
			3846-69
		HM92560-8	★**4027**
			3846-12
			3846-21
			3846-61
			3846-74
		HM92560-9	★**4027**
			3846-13
			3846-22
			3846-62
			3846-75
925605	**Harris**	**HM925605**	★**4027**
92562	Harris	HM92562	3846-6
			3846-7
			3846-44
9257	MicronTech	MT9257	3830-15
			3830-23
			3830-31
92570	**Harris**	**HM92570-5**	★**4027**
			3846-27
			3846-80
		HM92570-8	★**4027**
			3846-17
			3846-23
			3846-70
			3846-76
		HM92570-9	★**4027**
			3846-18
			3846-24
			3846-71
			3846-77
9259	NEC	μPD9259A	1459-37
			1457-229
			1457-381
926	Plessey	ML926	3323-50
92600	Sharp	LZ92600	4454-38
9264	AMD	AM9264B	3851-71
		AM9264C	3851-22
		AM9264D	3850-103
		AM9264E	3850-61
9265	AMD	AM9265B	3851-79
		AM9265C	3851-37
		AM9265D	3850-119
		AM9265E	3850-72
9266	SMC	FDC9266	1467-31
927	Plessey	ML927	3323-51
	Teltone	M927	3382-14
928	AMD	AM928	3849-1
	Plessey	ML928	3323-52
92800	Sharp	LZ92800	4454-39
929	Plessey	ML929	3323-53
92L44	AMD	AM92L44B	3840-108
		AM92L44BM	3840-109
		AM92L44C	3840-89
		AM92L44CM	3840-90
		AM92L44D	3840-66
93	Heurikon	MLZ-93	2009-23
930	**Fairchild**	**930**	★ **609**
			★ **618**
			★ **622**
			★ **623**
	Motorola	**MVME930**	★**2113**
9300	Cadnetix	CDX-9300	4907-3
		CDX9300	★**5102**
	Fairchild	**9300C**	★ **609**
			★ **617**
			881-25
			★ **609**
			★ **617**
			3854-84
		9300M	★ **609**
			★ **617**
			881-26
			★ **609**
			★ **617**
			3854-85
	Motorola	MC9300	881-29
			3854-34
	National	DM9300	881-33
			3854-101
	Toshiba	TC9300-003A	3375-136
		TC9300-008	3375-137
9301	**Fairchild**	**9301C**	★ **617**
			862-115
		9301M	★ **617**
			862-116
	Motorola	MC9301	862-121
	National	DM9301	862-125
	Signetics	**N9301**	★**1175**
9302	Fairchild	9302C	862-117
		9302M	862-118
9304	Fairchild	9304C	854-166
		9304M	854-167
	Motorola	MC9304	854-169
9305	Fairchild	9305C	859-48
		9305M	859-49
9306	National	NMC9306	3811-2
		NMC9306/COP494	
			¶ 434-9
			¶ 434-19
			(Continued)
9306	NEC	μPD9306	1458-7
	SGS	M9306	3811-10
9307	Fairchild	9307C	2875-65
		9307M	2875-66
	Motorola	MC9307	2875-71
9308	**Fairchild**	**9308C**	★ **617**
			875-25
		9308M	★ **617**
			875-26
9309	**Fairchild**	**9309C**	★ **609**
			★ **617**
			★ **622**
			★ **623**
			878-3
		9309M	★ **609**
			★ **617**
			★ **622**
			★ **623**
			878-4
	Motorola	MC9309	878-6
	National	DM9309	878-8
	Signetics	**N9309**	★**1175**
			878-9
		S9309	878-10
931	**Motorola**	**MVME931**	★**2113**
9310	Fairchild	9310C	860-135
		9310M	860-136
	Motorola	MC9310	860-139
	National	DM9310	860-143
	Signetics	**N9310**	★**1175**
			860-146
9311	**Fairchild**	**9311C**	★ **617**
			863-167
		9311M	★ **617**
			863-168
	Motorola	MC9311	863-171
	National	DM9311	863-175
9312	**Fairchild**	**9312C**	★ **617**
			879-137
		9312M	★ **617**
			879-138
	Motorola	MC9312	879-140
	National	DM9312	879-142
	Signetics	**N9312**	★**1175**
9313	Fairchild	9313C	879-149
		9313M	879-150
9314	**Fairchild**	**9314C**	★ **617**
			875-68
		9314M	★ **617**
			875-69
	Motorola	MC9314	875-71
	Signetics	S9314	875-72
9316	**Fairchild**	**9316C**	★ **617**
			858-121
		9316M	★ **617**
			858-122
	GI	R03-9316B	3849-58
		R03-9316C	3849-54
	Motorola	MC9316	858-125
	National	DM9316	858-129
	Signetics	**N9316**	★**1175**
			858-132
9317	Fairchild	9317BC	2875-106
		9317BM	2875-107
		9317CC	2875-133
		9317CM	2875-134
93174	Fairchild	93174C	866-26
9318	Fairchild	9318C	888-139
		9318M	888-140
	Motorola	MC9318	888-142
	National	DM9318	888-146
9319	Fairchild	9319C	861-63
		9319M	861-64
932	**Fairchild**	**932**	★ **618**
	Motorola	**MVME932**	★**2113**
9320	Fairchild	9320C	888-52
		9320M	861-65
	LSILogic	**LL9320**	★**4676**
			4450-15
9321	Fairchild	9321C	863-3
		9321M	863-4
9322	**Fairchild**	**9322C**	★ **609**
			★ **617**
			★ **622**
			★ **623**
			878-159
			(Continued)
9322	**Fairchild**	**9322M**	★ **609**
			★ **617**
			★ **622**
			★ **623**
			878-160
	Motorola	MC9322	878-163
	National	DM9322	878-167
	Signetics	**N9322**	★**1175**
			878-172
9324	**Fairchild**	**9324C**	★ **617**
			854-47
		9324M	★ **617**
			854-48
	Motorola	MC9324	854-53
	Signetics	**N9324**	★**1175**
			854-67
9328	**Fairchild**	**9328C**	★ **617**
			882-154
			3856-88
		9328M	★ **617**
			882-155
			3856-89
	Motorola	MC9328	882-157
			3856-87
933	**Motorola**	**MVME933**	★**2113**
9331	HybridSys	DAC9331-14	2870-27
		DAC9331-16-4	2872-12
		DAC9331-16-5	2871-37
		DAC9331-16-6	2871-27
	MicroPwr	**MP9331-4**	★**3206**
			2872-13
		MP9331-5	★**3206**
			2871-38
		MP9331-6	★**3206**
			2871-28
	Sharp	IR9331	3405-74
9334	Fairchild	9334	¶ 361-8
		9334C	★ **617**
			875-125
		9334M	★ **617**
			875-126
	National	DM9334	875-130
	Signetics	**N9334**	★**1175**
			875-131
		S9334	875-132
9338	**Fairchild**	**9338C**	★ **617**
			876-145
		9338M	★ **617**
			876-146
	HybridSys	HS9338-0	2869-2
		HS9338-1	2867-33
		HS9338-2	2865-12
9340	Fairchild	9340C	856-17
		9340M	856-18
	ThomsonCSF	EF9340	1468-75
			¶ 418-6
			¶ 418-9
			¶ 418-10
			¶ 430-4
93403	Sharp	IR93403	3373-40
93407	Fairchild	93407C	876-147
		93407M	876-148
9341	Fairchild	9341C	855-19
		9341M	855-20
	ThomsonCSF	EF9341	1468-76
			¶ 418-6
			¶ 418-9
			¶ 418-10
			¶ 430-4
93412	AMD	AM93412	3833-23
		AM93412AC	3833-19
		AM93412AM	3833-34
		AM93412M	3833-48
93415	AMD	AM93415AC	3834-63
		AM93415AM	3834-73
		AM93415C	3834-79
		AM93415M	3834-95
	Fairchild	**93415AC**	★**4011**
			3834-65
		93415C	★**4011**
			3834-81
		93415M	★**4011**
			3834-89
	Motorola	**MCM93415C**	★**4123**
			3834-82
			(Continued)

¶ Indicates page number in Application Note Directory.
★ Indicates additional data is provided on the page noted.

Base Number	Source	Device	Page-Line
93415	**Motorola**	**MCM93415M**	★**4123**
			3834-92
93419	Fairchild	93419A	3832-19
		93419C	3832-21
		93419M	3832-23
	Fujitsu	MBM93419	3832-22
9342	Fairchild	9342C	855-84
		9342M	855-85
	HybridSys	HS9342B	2843-24
		HS9342C	2843-25
93422	AMD	AM93422	3833-24
		AM93422AC	3833-20
		AM93422AM	3833-36
		AM93422M	3833-50
	Cypress	CY93422AC	3833-15
		CY93422AM	3833-29
		CY93422C	3833-25
		CY93422M	3833-45
	Fairchild	**93422AC**	★**4012**
			3833-21
		93422AM	★**4012**
			3833-30
		93422C	★**4012**
			3833-38
		93422M	★**4012**
			3833-52
	Motorola	**MCM93422A**	★**4123**
			3833-39
93425	AMD	AM93425AC	3834-64
		AM93425AM	3834-74
		AM93425C	3834-83
		AM93425M	3834-96
	Fairchild	**93425AC**	★**4012**
			3834-66
		93425AM	★**4012**
			3834-87
		93425C	★**4012**
			3834-85
		93425H-20	★**4012**
			3816-75
			3834-52
			3834-54
		93425H-25	★**4012**
			3816-76
			3834-57
			3834-59
		93425M	★**4012**
			3834-93
	Motorola	**MCM93425**	★**4123**
			3834-86
9344	Fairchild	9344M	855-130
9345	ThomsonCSF	EF9345	1458-5
9346	National	NMC9346	3811-37
		NMC9346/COP495	
			¶ 434-19
93475	Fairchild	93475	3835-105
93479	**Fairchild**	**93479AC**	★**4012**
			3834-12
		93479AM	★**4012**
			3834-14
		93479C	★**4012**
			3834-15
		93479M	★**4012**
			3834-17
9348	**Fairchild**	**9348C**	★ **617**
			889-57
		9348M	★ **617**
			889-58
9349	HybridSys	DAC9349-12	2865-41
		DAC9349-3D	2870-10
935	**Motorola**	**MVME935**	★**2113**
93500	IMI	G93500	4449-36
9353	OKI	MSM9353	2875-19
93546	Fairchild	93546M	854-82
9356	HybridSys	DAC9356	2865-48
	OKI	MSM9356	2875-20
936	**Fairchild**	**936**	★ **609**
			★ **618**
			★ **622**
			★ **623**
9362	OKI	MSL9362	3323-44
9363	OKI	MSL9363	3323-45
9364	ThomsonCSF	EF9364	1465-98
			¶ 418-11
			¶ 430-2

Base Number	Source	Device	Page-Line
9365	ThomsonCSF	EF9365	1465-83
			¶ 371-5
			¶ 417-12
			¶ 418-7
			¶ 441-8
9366	ThomsonCSF	EF9366	1465-84
			¶ 371-5
			¶ 418-7
			¶ 441-8
9367	ThomsonCSF	EF9367	1465-85
			¶ 371-5
			¶ 417-12
			¶ 418-8
			¶ 441-8
9368	Fairchild	9368C	2875-32
9369	ThomsonCSF	EF9369	1470-46
937	**Fairchild**	**937**	★ **618**
	Teltone	M937	3382-15
9370	Fairchild	9370C	2875-29
9373	**Goldstar**	**GL9373**	★**3580**
			3322-154
9374	Fairchild	9374C	2876-14
9377	HybridSys	DAC9377-16-4	2869-3
		DAC9377-16-5	2867-35
		DAC9377-16-6	2871-34
		DAC9377-4D	2870-17
	MicroPwr	**MP9377-16-4**	★**3206**
			2872-38
		MP9377-16-5	★**3206**
			2871-41
		MP9377-16-6	★**3206**
			2871-44
9386	Fairchild	9386C	874-154
		9386M	874-155
	Signetics	**N9386**	★**1175**
			874-161
		S9386	874-162
93C06	Hyundai	HY93C06A	3811-9
93C46	Hyundai	HY93C46	3811-35
	ICT	93C46	3811-39
93L00	**Fairchild**	**93L00C**	★ **618**
			3854-31
		93L00M	★ **618**
			3854-32
93L01	**Fairchild**	**93L01**	★ **618**
93L02	**Fairchild**	**93L02**	★ **618**
93L08	**Fairchild**	**93L08**	★ **618**
93L09	**Fairchild**	**93L09**	★ **618**
93L10	**Fairchild**	**93L10**	★ **618**
93L12	**Fairchild**	**93L12**	★ **618**
93L14	**Fairchild**	**93L14**	★ **618**
93L21	**Fairchild**	**93L21**	★ **618**
93L22	**Fairchild**	**93L22**	★ **618**
93L24	**Fairchild**	**93L24**	★ **618**
93L28	**Fairchild**	**93L28C**	★ **618**
			3856-84
		93L28M	★ **618**
			3856-85
93L34	**Fairchild**	**93L34**	★ **618**
93L38	**Fairchild**	**93L38**	★ **618**
93L412	AMD	AM93L412	3833-49
		AM93L412AC	3833-35
		AM93L412AM	3833-42
		AM93L412M	3833-55
93L415	AMD	AM93L415A	3834-80
		AM93L415C	3834-88
		AM93L415M	3834-101
	Fairchild	**93L415**	★**4011**
			3834-90
		93L415C	★**4011**
			3834-91
		93L415M	★**4011**
			3834-102
93L421	Fairchild	93L421M	3832-81
93L422	AMD	AM93L422	3833-51
		AM93L422AC	3833-37
		AM93L422AM	3833-43
		AM93L422M	3833-56
	Cypress	CY93L422AC	3833-26
		CY93L422AM	3833-41
		CY93L422C	3833-46
		CY93L422M	3833-54
	Fairchild	**93L422AC**	★**4012**
			3833-31
		93L422AM	★**4012**
			3833-44
			(Continued)

Base Number	Source	Device	Page-Line
93L422	**Fairchild**	**93L422C**	★**4012**
			3833-53
		93L422M	★**4012**
			3833-57
	Motorola	**MCM93L422**	★**4123**
			3833-10
			3833-22
		MCM93L422A	★**4123**
			3833-40
93L425	AMD	AM93L425A	3834-84
		AM93L425M	3834-103
	Fairchild	**93L425C**	★**4012**
			3834-94
		93L425M	★**4012**
			3834-104
93S00	Fairchild	93S00C	881-55
			3854-117
		93S00M	881-56
			3854-118
93S10	Fairchild	93S10C	860-177
		93S10M	860-178
93S12	Fairchild	93S12C	880-9
		93S12M	880-10
93S137	Fairchild	93S137C	863-159
		93S137M	863-160
93S16	AMD	AM93S16C	858-166
		AM93S16M	858-167
	Fairchild	93S16C	858-170
		93S16M	858-171
93S41	Fairchild	93S41C	855-71
		93S41M	855-72
93S42	Fairchild	93S42C	855-110
		93S42M	855-111
93S43	Fairchild	93S43	¶ 353-5
		93S43C	855-140
		93S43M	855-141
93S46	Fairchild	93S46C	854-83
93S47	Fairchild	93S47C	854-84
		93S47M	854-85
93S48	AMD	AM93S48C	889-59
		AM93S48M	889-60
93S62	Fairchild	93S62C	889-32
		93S62M	889-33
93Z450	Fairchild	93Z450	3817-89
		93Z450A	3817-73
93Z451	**Fairchild**	**93Z451**	★**4015**
			3817-91
		93Z451A	★**4015**
			3817-77
93Z459	Fairchild	93Z459	¶ 445-4
			¶ 445-5
			¶ 445-13
			¶ 445-15
93Z510	Fairchild	93Z510C	3818-110
		93Z510M	3819-28
93Z511	**Fairchild**	**93Z511C**	★**4015**
			3818-113
		93Z511M	★**4015**
			3819-31
93Z564	Fairchild	93Z564	3821-37
93Z565	**Fairchild**	**93Z565**	★**4015**
			3821-38
94	Quay	99/94FMWS	1819-16
940	ITT	TBA940	3325-113
	Motorola	**MVME940**	★**2113**
	SGS	TCA940	3318-130
			¶ 409-6
		TCA940E	3316-222
	ThomsonCSF	TCA940	3318-23
9400	TeledyneS	9400	3405-122
			¶ 386-6
			¶ 387-7
9401	AMD	AM9401C	3854-16
	Fairchild	9401C	886-155
			2878-5
			1448-5
		9401M	886-156
			2878-6
			1448-6
	Signetics	N9401	886-158
			2878-10
			1448-7
		S9401	2878-11
			1448-8
	TeledyneS	9401	3405-123
9402	TeledyneS	9402	3405-124

Base Number	Source	Device	Page-Line
9403	Fairchild	9403AC	1448-2
		9403AM	1448-3
	HybridSys	HS9403B	2843-29
		HS9403C	2843-30
	Signetics	N9403	3809-5
			1448-4
	TeledyneS	TSC9403	2874-12
			3856-111
9404	HybridSys	HS9404J	2845-5
		HS9404K	2844-7
		HS9404SB	2845-6
		HS9404TB	2844-8
	Intech	TSC9404	¶ 399-10
	TeledyneS	TSC9404	2874-13
			¶ 394-9
			3856-112
9408	HybridSys	HS9408J	2845-3
		HS9408K	2844-5
		HS9408SB	2845-4
		HS9408TB	2844-6
941	**Motorola**	**MVME941**	★**2113**
9410	HybridSys	HS9410J	2845-1
			3399-34
		HS9410K	2844-3
			3399-35
		HS9410S/B	3399-36
		HS9410SB	2845-2
		HS9410T	3399-37
		HS9410TB	2844-4
	ThomsonCSF	ETC9410	1451-20
		ETL9410	1451-27
9411	ThomsonCSF	ETC9411	1451-21
		ETL9411	1451-28
9413	ThomsonCSF	ET9413	1451-16
		ETL9413	1451-29
94132	GI	R094132	3820-110
9414	Fairchild	9414STC	886-159
			1448-9
		9414STM	886-160
			1448-10
		F9414STC	1469-113
		F9414STM	1469-114
942	**Motorola**	**MVME942**	★**2113**
9420	**LSILogic**	**LL9420**	★**4676**
			4450-20
	S-MOS	SED9420D	1467-64
	ThomsonCSF	ET9420	1451-17
		ETC9420	1451-22
		ETL9420	1451-30
9421	ThomsonCSF	ET9421	1451-18
		ETC9421	1451-23
		ETL9421	1451-31
9422	ThomsonCSF	ET9422	1451-19
		ETC9422	1451-24
		ETL9422	1451-32
943	**Motorola**	**MVME943**	★**2113**
9431	Sharp	IR9431	3404-107
9432	GI	R09432B	3850-7
		R09432D	3849-80
9433	GI	R09433B	3850-8
		R09433C	3850-9
		R09433D	3849-81
944	**Fairchild**	**944**	★ **618**
	Motorola	**MVME944**	★**2113**
9440	Fairchild	F9440	1435-3
		F9440M	1463-93
9444	ThomsonCSF	ETC9444	1451-25
		ETL9444	1451-33
9445	**Fairchild**	**F9445**	★**1609**
			1435-4
	HiLevel	DP9445	1815-1
	ThomsonCSF	ETC9445	1451-26
		ETL9445	1451-34
944516	Fairchild	F944516	1463-94
944518	Fairchild	F944518	1463-95
944520	Fairchild	F944520	1463-96
944524	Fairchild	F944524	1463-97
945	**Fairchild**	**945**	★ **618**
9450	**Fairchild**	**F9450**	★**1607**
			844-59
			¶ 366-16
		F9450C	★**1607**
			1435-5
		F9450M	★**1607**
			1435-6

Arranged alphanumerically from left to right.

PART NUMBER INDEX

Base Number	Source	Device	Page-Line
9451	**Fairchild**	**F9451**	★ **1608**
			1463-99
9452	**Fairchild**	**F9452**	★ **1608**
			1463-98
94558	Sharp	IR94558	3367-35
94559	Sharp	IR94559	3367-36
9458	**Goldstar**	**GM9458**	★ **3580**
946	**Fairchild**	**946**	★ **609**
			★ **618**
			★ **622**
			★ **623**
9460	HybridSys	HS9460	1469-42
9464	GI	RO9464AB	3851-72
		RO9464AC	3851-23
		RO9464AD	3850-62
		RO9464B	3851-73
		RO9464C	3851-24
		RO9464D	3850-63
947	Teltone	M947	3382-16
9471	S-MOS	STC9471	3380-11
9472	S-MOS	STC9472	3380-9
9474	HybridSys	HS9474J	2844-51
		HS9474K	2844-1
		HS9474S	2844-52
		HS9474SB	2844-53
		HS9474T	2844-54
		HS9474TB	2844-2
948	**Fairchild**	**948**	★ **618**
	Teltone	M948	3382-17
9480	GI	AY5-9480	3382-58
9481	S-MOS	STC9481	3380-32
9482	S-MOS	STC9482	3380-31
949	**Fairchild**	**949**	★ **618**
9491	TeledyneS	9491AM	3401-151
		9491B	3402-1
		9491BM	3402-2
9494	Sharp	IR9494	3396-70
9495	TeledyneS	TSC9495C	3402-134
9496	TeledyneS	TSC9496C	3403-64
94P128	GI	RO94P128	3850-27
94P64	GI	RO94P64	3850-26
950	AppBusComp	FP950	2031-7
	Burr-Brown	MPV950D	2044-14
		MPV950S	2044-16
	ITT	TBA950	3325-114
	National	TBA950-2	3325-122
9500	ITT	TDA9500	3325-116
9503	ITT	TDA9503	3325-117
	Xicor	**X9503**	★ **4281**
			3401-79
9504	**Xicor**	**X9504**	★ **4281**
			3401-80
9508	GI	RO9508	3850-28
95087	UMC	UM95087	3382-99
95089	UMC	UM95089	3382-100
9510	OKI	MSL9510R	2877-53
	TI	THCT9510	843-103
		THCT9510E	808-21
		THCT9510M	808-22
			808-23
9511	AMD	AM9511	¶ 382-5
		AM9511A	890-1
			1469-72
		AM9511A-1	1457-81
		AM9511A-4	1469-73
	OKI	MSL9511R	2877-54
9512	AMD	AM9512	1469-74
			¶ 382-5
		AM9512-1	1469-75
	GI	RO9512B	3853-64
		RO9512C	3853-59
		RO9512CS	3853-62
		RO9512DS	3853-54
95120	GI	RO95120	3853-43
95121	GI	RO95121	3852-73
			3853-37
9513	AMD	AM9513A	1469-158
	ITT	TDA9513	3325-118
9516	AMD	AM9516A-1	1461-140
		AM9516A-4	1461-141
		AM9516A-6	1462-1
		AM9516A-8	1462-2
	HybridSys	HS9516-4	2846-48
		HS9516-5	2847-3
		HS9516-6	2847-18
		HS9516B-4	2847-19
			(Continued)
9516	HybridSys	HS9516B-5	2847-4
		HS9516B-6	2846-52
		HS9516C-4	2847-20
		HS9516C-5	2847-5
		HS9516C-6	2846-53
9517	AMD	AM9517A	1466-75
		AM9517A-1	1466-76
		AM9517A-4	1466-77
		AM9517A-5	1457-216
9518	AMD	AM9518	1457-137
9519	AMD	AM9519A	1465-49
952	**Datel**	**DAS-952R**	★ **3163**
			3399-52
	Plessey	SL952	3326-115
9520	AMD	AM9520	1469-101
955	Siemens	TCA955	2896-6
9551	AMD	AM9551	1457-198
	Siliconix	**SI9551**	★ **3260**
			2874-46
9552	**Siliconix**	**SI9552**	★ **3260**
			2874-40
9553	**Siliconix**	**SI9553**	★ **3260**
			2874-43
9554	**Siliconix**	**SI9554**	★ **3260**
			2874-37
9555	**Siliconix**	**SI9555**	★ **3260**
9556	**Siliconix**	**SI9556**	★ **3260**
9559	UMC	UM9559E	3382-101
		UM9559F	3382-102
956	Teltone	M956	3382-18
957	**SiliconSys**	**SSI957**	★ **3737**
			3381-130
			3382-13
	Teltone	M957	3382-19
958	Teltone	M958	3382-20
9580	AMD	AM9580	2892-27
	GI	RO9580	3851-38
			1451-90
9581	AMD	AM9581	2892-19
9582	AMD	AM9582	1468-48
959	Teltone	M959	3378-35
95C85	AMD	AM95C85	1468-11
96	Rockwell	V96P/1	¶ 414-3
960	Burr-Brown	MPV960	2044-13
	Calmos	CA960	4441-11
9600	CreMicro	9600A	2007-28
	Fairchild	**9600C**	★ **609**
			880-124
		9600M	★ **609**
			880-125
	LSILogic	**LL9600**	★ **4676**
			4450-23
	SMC	KR9600	2880-13
9601	**Fairchild**	**9601C**	★ **609**
			★ **617**
			★ **622**
			★ **623**
			880-102
		9601M	★ **609**
			★ **617**
			★ **622**
			★ **623**
			880-103
	Motorola	MC9601	880-105
	National	DM9601	880-107
	Raytheon	RF9601	880-108
	Signetics	**N9601**	★ **1175**
		S9601	880-109
	SMC	KR9601	2880-14
9602	**Fairchild**	**9602C**	★ **609**
			★ **617**
			★ **622**
			★ **623**
			880-161
		9602M	★ **609**
			★ **617**
			★ **622**
			★ **623**
			880-162
	Motorola	MC9602	880-166
	National	DM9602	880-168
	Signetics	**N9602**	★ **1175**
			880-169
		S9602	880-170
	SMC	KR9602	2880-16
9609	CreMicro	9609	2007-29
9610	CreMicro	9610	2031-4
96101	Fairchild	96101	864-47
		96101C	2881-27
		96101M	2881-28
96103	CreMicro	96103	2030-59
	Fairchild	96103M	2888-4
96106	Fairchild	96106	2885-39
9611	CreMicro	9611	2030-66
9612	CreMicro	9612	2031-5
	Fairchild	9612C	2883-20
9614	Fairchild	9614C	2883-21
		9614M	2883-22
9615	Fairchild	9615C	2886-56
		9615M	2886-57
9616	CreMicro	9616	2030-70
	Fairchild	μA9616HC	2881-20
		μA9616HEC	2881-21
		μA9616HM	2881-22
96172	**Fairchild**	**μA96172**	★ **3568**
			2884-29
96173	**Fairchild**	**μA96173**	★ **3570**
			2887-37
96174	**Fairchild**	**μA96174**	★ **3568**
			2884-30
96175	**Fairchild**	**μA96175**	★ **3570**
			2887-38
96176	**Fairchild**	**μA96176**	★ **3574**
			2891-21
96177	**Fairchild**	**μA96177**	★ **3573**
			2891-19
96178	**Fairchild**	**μA96178**	★ **3573**
			2891-20
9619	CreMicro	9619	2007-24
962	**Fairchild**	**962**	★ **609**
			★ **618**
			★ **622**
			★ **623**
		μA962AM	886-133
9620	CreMicro	9620A	2030-58
9622	CreMicro	9622	2030-53
9623	CreMicro	9623	2031-3
9625	CreMicro	9625	2030-60
9633	CreMicro	9633	2030-78
9634	CreMicro	9634	2030-77
9635	CreMicro	9635	2030-73
9636	Fairchild	9636A	¶ 396-13
		μA9636AC	2881-12
		μA9636AM	2881-13
	Motorola	**μA9636**	★ **3212**
			2881-14
96364	ThomsonCSF	SFF96364	1466-10
96366	ThomsonCSF	SFF96366	1466-11
9637	CreMicro	9637A	2030-68
	Fairchild	9637A	¶ 396-13
		μA9637AC	2886-49
		μA9637AM	2886-50
	TI	**μA9637AC**	★ **722**
			2886-53
9638	CreMicro	9638	2030-72
	Fairchild	9638	¶ 396-13
		μA9638C	2883-54
		μA9638M	2883-55
9639	CreMicro	9639	2007-25
	Fairchild	**μA9639A**	★ **3578**
			2886-44
		μA9639AC	★ **3578**
			2886-55
9640	CreMicro	9640A	2031-1
	Fairchild	μA9640C	888-87
			2889-42
		μA9640M	888-88
			2889-35
9641	CreMicro	9641	2007-9
9642	CreMicro	9642	2030-61
9643	Fairchild	μA9643C	2892-105
9645	Fairchild	μA9645C	2893-9
965	Siemens	TCA965	3405-126
9650	CreMicro	9650A	2030-52
	Fairchild	μA9650C	3398-120
	OKI	MSL9650	3808-8
9657	CreMicro	9657	2030-57
9659	CreMicro	9659	2030-48
966	OKI	MSL966	2874-109
9661	CreMicro	9661	2030-64
9662	OKI	MSL9662	3808-21
9663	CreMicro	9663	2030-51
	OKI	MSL9663	3808-22
9664	OKI	MSL9664	3808-19
9665	Fairchild	μA9665C	2894-103
			3310-102
	OKI	MSL9665	3808-20
9666	Fairchild	μA9666C	2894-121
			3310-103
		μA9666M	2894-122
			3310-104
9667	Fairchild	μA9667C	2894-74
			3310-105
		μA9667M	2894-75
			3310-106
9668	Fairchild	μA9668C	2894-55
			3310-107
		μA9668M	2894-56
			3310-108
967	Teltone	M967	3381-139
9670	CreMicro	9670	2030-65
96702	CreMicro	96702	2031-2
9671	CreMicro	9671	2030-40
9673	CreMicro	9673	2030-55
968	Kontron	KDS-968	1817-1
		KDS-968-07	1817-2
9680	Plessey	SP9680	3314-47
96810	Mitel	MH96810	3381-64
9685	AD	AD9685	3312-59
	Plessey	SP9685	3314-21
			¶ 414-9
9687	AD	AD9687	3312-60
	Plessey	SP9687	3314-22
			¶ 414-9
96L02	Fairchild	96L02C	880-163
		96L02M	880-164
96LS02	**Fairchild**	**96LS02C**	★ **615**
			★ **5311**
			881-1
		96LS02M	★ **615**
			★ **5311**
			881-2
96LS32	**Fairchild**	**96LS32**	★ **5311**
			2892-62
		96LS32C	★ **5311**
			2892-63
96LS42	Fairchild	96LS42C	2892-65
		96LS42M	2892-66
96LS488			
	Fairchild	96LS488	¶ 361-5
		96LS488DC	887-21
			1467-95
		96LS488DM	887-22
			1467-96
96S02	Fairchild	96S02C	881-5
		96S02M	881-6
97	AllenSys	FX-97	2023-21
970	Intech	A970	3399-62
	National	TBA970	3327-27
9700	**AD**	**AD9700**	★ **3106**
			844-14
		AD9700B	★ **3106**
			2850-15
		AD9700S	★ **3106**
			2850-16
97000	**HoneywellSPT**	**HDAC97000**	★ **3682**
			844-20
			2854-5
9706	Fairchild	μA9706C	2850-13
9708	Fairchild	μA9708	3399-2
			1469-49
		μA9708C	2837-40
		μA9708M	2837-41
	TI	SBP9708C	855-156
			1462-64
		SBP9708M	855-157
			1462-65
		SPB9708	843-39
9709	National	AM9709C	2828-72
971	Siemens	TCA971	3309-30
9710	National	AM9710C	2828-79
9711	National	AM9711C	2828-58
9712	National	AM9712C	2828-64
9716	AMD	AM9716	3819-73
	National	NMC9716	¶ 434-10
9725	Sharp	IR9725	3346-147
9740	OEI	9740	3357-1

¶ Indicates page number in Application Note Directory.
★ Indicates additional data is provided on the page noted.

Base Number	Source	Device	Page-Line
9750	Plessey	SP9750	¶ 414-9
9754	Signetics	HEF9754V	2874-1
9761	AMD	AM9761	1457-34
9768	AD	AD9768	844-12
			2850-14
	Plessey	SP9768	2855-36
9770	Plessey	SP9770	844-36
			2858-3
			2859-73
9791	SMC	FDC9791	1467-3
9793	SMC	FDC9793	1467-4
9795	SMC	FDC9795	1467-5
9797	SMC	FDC9797	1467-6
97C09	National	AM97C09	2828-73
980	Kontron	KDS-980	1817-3
		KDS-980-02	1817-4
		KOS-980	1817-5
	Signetics	TCA980	3307-51
	SiliconSys	**SSI980**	★ **3737**
			3377-36
	Teltone	M980	3377-38
9808	OEI	9808	3345-1
981	SiliconSys	SS981	3377-35
		SSI981	★ **3737**
	Teltone	M981	3377-39
9817	National	NMC9817-20	3812-27
		NMC9817-25	3812-53
		NMC9817-35	3812-103
9818	TI	SBP9818C	3849-36
		SBP9818M	3849-37
982	**SiliconSys**	**SSI982**	★ **3737**
			3377-37
	Teltone	M982	3377-40
9826	OEI	9826	3357-160
9840	**LSILogic**	**LL9840**	★ **4676**
			4450-25
9864	AMD	AM9864	3813-31
		AM9864-25	3813-32
		AM9864-25M	3813-33
		AM9864-3	3813-62
		AM9864-35M	3813-63
	GI	RO9864AB	3851-80
		RO9864AC	3851-39
		RO9864AD	3850-73
		RO9864B	3851-81
		RO9864C	3851-40
		RO9864D	3850-74
990	Telefunken	TBA990	3325-30
	TI	TM990	¶ 385-1
			¶ 385-6
			¶ 385-8
			¶ 385-9
			¶ 385-10
			¶ 385-11
		TM990/1481	2027-8
		TM990/201	2042-64
		TM990/202	2042-63
		TM990/203A	2042-66
		TM990/204	2042-65
		TM990/303B	2042-50
		TM990/304	2042-62
		TM990/307	2042-67
		TM990/308	2042-69
		TM990/309	2042-56
		TM990/310	2042-59
		TM990/311	2042-60
		TM990/314	2042-51
		TM990/315	2042-58
		TM990/317	2042-68
		TM990/959	2042-57
		TM990/u89	¶ 385-3
9900	GouldAMI	S9900	1462-53
			¶ 364-13
			¶ 366-13
			¶ 369-14
			¶ 380-13
			1435-15
	TI	TM9900/100MA	2025-23
		TM9900/101MA	2025-24
		TM9900/102	2027-7
		TMS9900	1462-54
			¶ 365-19
			¶ 366-1
			¶ 367-6
			¶ 380-12
			¶ 381-17
			(Continued)
9900	TI	TMS9900	¶ 382-4
			1437-13
		TMS9900-40	1462-55
			1437-14
9901	GouldAMI	S9901	1462-82
	TI	**SBP9901**	★ **731**
		SBR9901	★ **731**
		SPB9901	1464-78
		TMS9901	★ **731**
			1462-83
9902	GouldAMI	S9902	1462-62
	TI	TMS9902A	1462-63
9903	TI	TMS9903	1462-85
9904	TI	TIM9904	1462-66
9905	TI	TIM9905	1462-68
9906	OEI	9906	3331-43
			3334-252
			3357-42
	TI	TIM9906	1462-61
9907	TI	TIM9907	1462-78
9908	TI	TIM9908	1462-81
991	Siemens	TCA991	3309-31
9910	OEI	9910	3306-40
			3329-36
99105	TI	TMS99105A	1462-58
			1437-15
9911	OEI	9911	3306-41
			3329-30
99110	TI	TMS99110A	1462-59
			1437-16
9914	OEI	9914A	3330-128
			3331-21
			3334-273
			3357-169
	TI	**TMS9914A**	★ **729**
			1462-72
	Western	WD9914	1467-94
9915	OEI	9915	3313-27
9916	OEI	9916	3331-42
			3334-269
			3357-168
9918	OEI	9918	3330-129
			3334-270
9923	TI	TMS9923	1465-31
9927	TI	TMS9927	¶ 365-19
			¶ 368-1
9940	TI	TMS9940	¶ 367-18
99531	TI	TMS99531	1462-84
99532	Cermetek	TMS99532	¶ 395-18
	TI	TMS99532	3380-16
			1462-71
		TMS99532A	3380-10
99534	TI	TMS99534	3380-17
		TMS99534A	3380-12
99542	TI	TMS99542	3380-20
9963	OEI	9963	3306-37
			3329-11
9965	**TI**	**SBP9965**	★ **731**
			1464-77
		SBP9965C	★ **731**
			1462-76
		SBP9965M	★ **731**
			1462-77
		SBR9965	★ **731**
99650	TI	TMS99650	1462-75
9966	**TI**	**SBP9966**	★ **731**
			1464-76
			¶ 366-14
		SBR9966	★ **731**
9980	GouldAMI	S9980A	1419-2
	TI	TMS9980A	1462-56
			1437-17
9981	TI	TMS9981	1462-57
			1437-18
9989	**TI**	**SBP9989**	★ **731**
			1464-75
			¶ 366-14
			¶ 372-6
			1433-29
9990	Cybersys	CYKEY9990	1813-3
9995	TI	TM9995	1462-52
		TMS9995	1437-19
99C68	AMD	AM99C68-35	3841-12
		AM99C68-45	3841-51
		AM99C68-45M	3841-52
		AM99C68-55	3841-98
			(Continued)
99C68	AMD	AM99C68-55M	3841-99
		AM99C68-70	3842-37
		AM99C68-70M	3842-38
99C88	AMD	AM99C88-10	3843-15
		AM99C88-10M	3843-16
		AM99C88-12	3843-32
		AM99C88-12M	3843-33
		AM99C88-15	3843-57
		AM99C88-15M	3843-58
		AM99C88-20M	3843-83
		AM99C88-70	3843-1
9K08	Sharp	IR9K08	2850-45
9LP00	**Signetics**	**ACE9LP00**	★ **4747**
			4455-13
9P4	MMI	PLE9P4C	4474-14
		PLE9P4M	4474-15
9P8	MMI	PLE9P8C	4474-16
		PLE9P8M	4474-17
9R8	MMI	PLE9R8C	4474-18
		PLE9R8M	4474-19
9T00	**Signetics**	**ACE9T00**	★ **4747**
9T04	Signetics	ACE9T04	4455-12

Arranged alphanumerically from left to right.

PART NUMBER INDEX

Base Number/Device	Source	Page-Line
3u CMOS	NCR	4485-13
64K/CMOS	Cortex	2013-17
64K/S	Cortex	2013-20
90F/MPS	Quay	2013-10
94/MPS	Quay	2013-12
A PLUS	Altera	5007-2
		5040-55
ABEL	**Datal/O**	★**5109**
		5007-1
		5048-19
		4477-1
		4477-3
		4477-5
ADV-CMOS	GTEMicro	4479-13
		4479-14
		4479-15
AIDSSIM	Gateway	4954-1
		5050-31
		4969-1
		5050-37
AIDSSIM-A	Gateway	5029-1
AIDSTG	Gateway	5050-49
ALGA	Matra	4992-1
ALIS	GTEMicro	4459-62
ALLSPICE	Acotech	4944-1
ALPHAMAP	Alphatron	4478-1
ALPS	Hughes	4483-35
AMSSeries	Siemens	2011-13
Analog	MicroPwr	4489-11
Analog Analysis	AdvEngSol	4944-2
Analog Designer	Valid	4936-2
		4944-3
Analog Workbench	AnalDesTools	4904-2
ANALOG WORKBENCH	AnalDesTools	4466-15
AnalogSim	VAMP	4945-1
APLE	Applicon	5040-79
		5040-85
		5041-1
		5041-7
		5041-13
APLE860	Applicon	4466-9
		4466-17
ARCIS	Matra	4954-2
ARIES	Applicon	4461-7
		4484-4
ASPEC	ControlData	4945-2
AT&T OMNIBOARDS	Omnicad	4976-1
AT&T OMNIROUTE	Omnicad	4976-2
AT&T OMNISIM	Omnicad	4954-3
Automatic Schematic	DraftingDyn	5048-55
AutoRouter	VAMP	4976-3
AV, UM	Fujitsu	4485-35
AV Library	Fujitsu	4478-18
AVM, UM	Fujitsu	4485-35
BHC Library	Barvon	4478-4
		4478-13
BHN Library	Barvon	4478-5
Bipolar	Fujitsu	4485-32
Block/Cell Lib	IMP	4480-4
Board Designer	Valid	4936-3
		4990-3
Board Master	**Daisy**	★**5108**
		4977-1
Board Sta	VAMP	4940-3
Board Station	Mentor	4921-1
BRAVO	Applicon	4461-31
Building Blocks	VIA-Systems	4996-1
CA	GouldAMI	4459-53
CAD Magic	ProtoCAD	5035-1
CADAT	HHB-Sys	4955-1
		5052-61
CADAT Fault Sim	HHB-Sys	4969-2
CADDS	CompVision	4977-2
		5045-85
CADEXEC	GESemi	4459-40
		4459-46
		4483-17
CAE	PCAD	4927-1
		4927-2
CAE-1	PCAD	4484-51
CAE-1, -2	PCAD	4460-47
		4460-52
		4460-56
		4460-60
		(Continued)
CAE-1, -2	PCAD	4460-71
		4460-74
		7761-12
CAE-1, CAE-2	PCAD	4459-48
		4483-19
CAE-1 (-2)	PCAD	4460-23
		4483-50
		4483-51
CAE-2	PCAD	4461-39
		4484-31
CAE-2000	Tex/CAE	4459-23
		4459-49
		4483-58
CAE2000	Tex/CAE	4459-2
		4459-9
		4459-15
		4461-15
CAEPAC I	**CAECO**	★**5105**
		5000-2
CAL-MP	SilvarLisco	4996-2
		5062-13
		4459-55
		4461-42
		4483-4
		4484-40
CALOS	Calos	5044-25
Capture Station	Mentor	4921-2
Cards II	Calma	4977-3
Case Layout Sys	**CaseTech**	★**5106**
		4978-1
CASS/CAL-MP	SilvarLisco	4484-52
CATS	HHB-Sys	5017-1
		5023-1
		5029-2
CATSCOPE	Calma	5032-1
CBD	GouldAMI	4479-3
CBX-FDC	Comark	2032-38
CC/CD	SiliconSys	4491-40
CCB	GouldAMI	4479-4
		4479-9
		4479-12
CCD	GouldAMI	4479-7
CCF	GouldAMI	4479-6
		4479-10
CCL	**Signetics**	★**4747**
CD	SiliconSys	4491-38
		4491-42
CELL-BASED CUSTOM	**GouldAMI**	★**4632**
Cell Edge	SDA-Systems	4930-3
CELL MASTER	Daisy	4483-14
		4483-28
		4483-31
		4483-56
		4484-5
		4484-8
Cell Station	Mentor	4921-3
CELL STATION	Mentor	4483-1
		4483-10
		4483-18
		4483-26
		4483-29
		4483-32
		4483-57
		4483-66
		4484-6
		4484-9
		4484-12
		4484-16
		4484-20
		4484-27
		4484-42
		4484-50
CELLGRAPH	Mentor	4996-3
CELLMOS	CTI	4478-8
		4478-9
		4478-10
		4478-11
		4478-12
CELLPLACE	Mentor	4996-3
CellPlus	Calma	4997-1
CELLROUTE	Mentor	4996-3
CHECK & EVAL	Matra	5011-1
Chip Designer	Valid	4937-1
Chip Edge	SDA-Systems	4931-1
Chip Master	**Daisy**	★**5108**
		5001-1
CHIP MASTER	Daisy	4466-1
		4466-5
		4466-20
Chip Master	Daisy	4466-11
Chip Station	Mentor	4922-1
CHIPGRAPH	Mentor	5000-3
		5055-31
ChipTool	VIA-Systems	5001-2
CI-PCMT	Chrislin	2031-30
CIPAR	GouldAMI	4483-23
CIPMF	OhioSci	2005-18
CLAMP	Plessey	4992-2
Classic	Plessey	4955-2
CLASSIC	Plessey	4461-19
Classic/Faults	Plessey	4969-3
CMOS	Plessey	4481-5
		4481-6
	TLSI	4482-5
	Unicorn	4493-42
CMOS-CPU	Intelicom	2015-18
CMOS-DP	TLSI	4482-3
CMOS-II Library	**NCR**	★**4722**
		★**4727**
		4481-1
CMOS-III Library	**NCR**	★**4722**
		★**4727**
		4481-2
CMOS-PIO	Intelicom	2040-65
CMOS-SIO	Intelicom	2041-5
CMOS/SOS	**RCA**	★**4742**
CMOS Chip	**Holt**	★**4662**
CMOS II	**RCA**	★**4742**
	TLSI	4482-4
CMOS II-DM	TLSI	4482-2
CMOS Library	ArrayTech	4478-2
	Calmos	4478-6
		4478-7
	CMA	4478-16
	Fairchild	4478-17
	Fujitsu	4478-20
	GI	4478-24
		4478-25
		4479-1
		4479-2
	IntCirSys	4463-15
		4479-19
		4479-20
		4479-21
		4479-22
		4479-25
	IMI	4479-27
	Intersil	4478-22
	MicroTech	4480-12
	Sahni	4481-17
	Sierra	4481-19
		4481-20
	SiliconSys	4481-26
	SMC	4481-29
	VTI	4482-19
		4482-20
CMOSII Library	TLSI	4482-1
CNI	Cromemco	2038-26
COFIS	Matra	4970-1
COMPARE	CompVision	5011-2
Compare	Valid	5012-3
COMPILE	**Unicorn**	★**4802**
		4482-12
		4484-39
COMPUTE ENGINE	Mentor	5021-1
		5021-2
		5024-1
		5029-3
COPS Series	National	¶ 368-8
		¶ 372-7
COSMAC	RCA	¶ 368-9
CPlace	VAMP	4978-3
CSP	Cromemco	2038-29
CT1000/SILOS	CaseTech	4460-38
		4483-60
CTD	Vatic	4466-25
CTI	Cromemco	2038-30
CUPL	AsstTech	4477-4
	PCAD	5007-3
		5058-79
Custom	**LSIComp**	★**4675**
	Micro-Rel	★**4680**
Custom Designer	Valid	4937-2
Custom Edge	SDA-Systems	5001-3
Custom Plus	Calma	5002-1
CV	CompVision	4466-10
		4466-19
DAC-HFBMC	Datel	2851-43
DACHK	**MicroNet**	★**3204**
		2865-11
Daisy Logic Sim	**Daisy**	★**5108**
		4955-3
		5047-49
DANA	Hughes	4460-4
		4460-8
		4460-11
		4483-36
DAS	**Tex/CAE**	★**5114**
		5032-2
DASH	**Datal/O**	★**5109**
	FutureNet	5049-43
		4459-31
		4459-36
		4459-45
		4460-14
		4460-17
		4460-29
		4460-32
		4460-44
		4460-49
		4461-2
		4461-9
		4461-34
		4483-16
		4483-46
		4483-47
		4483-72
DASH-1	FutureNet	4461-37
		4484-29
DASH-2	FutureNet	4459-52
DASH-FAULTSIM	FutureNet	4970-2
DASH-PCB	FutureNet	4879-2
DASH EDITOR	FutureNet	4916-2
DASH II	FutureNet	4459-26
DASH STRIDES	FutureNet	4916-3
DASLINK	**Tex/CAE**	★**5114**
Dasoft	Dasoft	4879-3
DCALC	**Tex/CAE**	★**5114**
DDSC	**Tex/CAE**	★**5114**
		5064-73
Design Cap Sys	HP	5052-49
Design Master	Multiwire	4980-1
		4980-2
Design Station	Chancellor	4911-3
	Mentor	4922-2
Designer V-X	CompVision	4912-1
Designers W/Sys	**Tex/CAE**	★**5114**
		4932-2
Device Characterization Lab	**MetaSoft**	★**5112**
DFS	**Daisy**	★**5108**
		4970-3
DHS/HCD	ArrayTech	4485-12
Digital Analysis	AdvEngSol	4956-1
Digitalker	National	1469-154
DIGITALKER II	National	¶ 428-3
DIR Board Maker	DIR-AdvTech	5035-2
Distributed Des Sta	Vectron	4941-2
DLM CMOS	GouldAMI	4479-8
DNA	Vectron	4980-3
		5067-85
DOC Station	Mentor	4922-3
DPU	Cromemco	2027-5
Dracula	ECAD	5011-3
		5048-67
DRACULA	ECAD	4483-2
DRAWING EDITOR II	Daisy	5047-55
DRC	CompVision	5012-1
	SDA-Systems	5012-2
	Valid	5012-3
DSIO	Mostek	2044-29
DSM	RACAL	4929-1
		4981-1
		5059-19
DVS	NCA	5013-1
		5057-13

Base Number/Device	Source	Page-Line
Dynamic Chip Checker	HHB-Sys	5032-3
ECA	Tatum	4945-3
Economega	GI	¶ 415-12
EDA	PCAD	4927-3
	Telesis	4935-2
		4981-2
		5065-79
		5065-73
EDA Des W/S	Telesis	4935-3
EDA Personal W/S	Telesis	4925-1
EDGE	ESP	4914-3
Edge	NCA	5002-2
EiCOMPuMOS	DiversTech	1813-6
ElectroCADDS	CompVision	4981-3
		5046-43
Electronic Des Sta	Applicon	4904-3
Electronic Des W/S	ControlData	4913-2
		4982-1
EM-SERIES	AppMicroSys	1811-2
EM Series	AppMicroSys	1811-3
Engineering Test Sys	**Daisy**	★**5108**
		5033-1
Entry Station	AdvEngSol	4903-2
	Mentor	4923-1
EPL	VTI	4474-38
ERC	CompVision	5013-2
ES-SERIES	AppMicroSys	1811-4
		¶ 379-7
ES Series	AppMicroSys	1811-5
ESP	ESP	4915-1
EXORciserII	Motorola	1817-18
Expediter	Zycad	5024-2
		5068-37
Expert	Versatec	4942-2
Expert Logic Sim	Versatec	4956-3
Expert PCB	Versatec	4982-2
Expert Timing Ver	Versatec	4956-3
Extract	Valid	5012-3
F68-PEP	Fairchild	2009-35
F SPICE	Ferranti	4946-2
Factron SPICE	Factron	4946-1
FAIRCAD	Fairchild	4915-3
		4459-25
		4483-7
FAIRLOGS	Fairchild	4957-1
FAIRLOGS/PFAULT	Fairchild	4971-1
		5030-1
FARCAD	**Fairchild**	★**4622**
Fast-Mask Engine	**SiliconSol**	★**5113**
Fast Mask Engine	Calma	5013-3
	SiliconSol	5014-1
Fault Evaluator	**Zycad**	★**5121**
		5030-2
		5068-13
FML	**Tex/CAE**	★**5114**
Formulator Mark III	Fairchild	1813-12
FREND	Torric	5035-3
		4466-28
		4466-29
FREND/CASE	Torric	4459-56
		4459-57
		4484-33
		4484-36
FREND/FUTURE NET	Torric	4459-60
FREND/FUTURENET	Torric	4484-34
		4484-37
FREND/PCAD	Torric	4459-58
		4459-59
		4484-35
		4484-38
Full Custom	CompVision	4912-2
Full Custom W/Sys	**Tex/CAE**	★**5114**
		4932-3
GALA	Hughes	4460-5
		4460-9
		4460-12
GARDS	SilvarLisco	4992-3
		5062-31
Gate Array	**Hughes**	★ **683**
Gate Array W/Sys	**Tex/CAE**	★**5114**
		4933-1
Gate Designer	Valid	4937-3
GATE DESIGNER	Valid	4459-28
		4460-42
		4460-57
		4460-75
		4461-6
		4461-44
		4483-64
		4484-3
Gate Master	**Daisy**	★**5108**
		4993-2
		5048-1
GATE MASTER	Daisy	4459-21
		4459-22
		4459-24
		4459-29
		4459-34
		4459-39
		4460-13
		4460-16
		4461-1
	Mentor	4459-73
Gate Station	Mentor	4924-3
GATEGRAPH	Mentor	4993-1
GATEMASTER	Daisy	4459-10
		4459-16
		4459-51
		4459-61
		4459-64
		4460-43
		4460-48
		4460-54
		4460-58
		4460-61
		4460-64
		4460-67
		4460-69
		4460-72
		4460-76
		4461-1
		4461-8
		4461-22
		4461-43
		4466-24
		4483-71
GATEPLACE	Mentor	4993-1
GATEROUTE	Mentor	4993-1
GATESTATION	Mentor	4459-54
		4461-4
		4461-14
		4461-35
		4461-41
		4484-1
Gateway Des Auto	Gateway	4917-2
Gateway Test Sys	Gateway	5018-1
		5033-2
GDS-II	Calma	4461-32
GDS I	Calma	5043-7
GDS II	Calma	5002-3
		5043-13
		4466-14
GDSII	Calma	4466-18
Generator Dev Tools	SiDesignLabs	5036-1
Genesil	SiCompilers	4931-3
Genesil Functional Simulator	SiCompilers	4957-2
Genesil Timing Analyzer	SiCompilers	4957-3
Genesis	SiCompilers	4932-1
		5009-3
		5061-79
GPIB	Cromemco	2038-24
Grale/Lognet	Telesis	5057-25
Graphic Editor	ControlData	5046-67
Graphic System	DraftingDyn	4914-2
GREENFIELD	Quantic	5036-2
H-Series	**Hughes**	★ **683**
Hall MOS	**MicroPwr**	★**4678**
Hardware Mod Lib	Mentor	5018-2
Hardware Ver Sys	Mentor	5033-3
HASS	Aldec	4971-2
		5024-3
		5030-3
HAZITALL	Lomas	2038-42
HCA Macro	**Harris**	★ **657**
HCAP-H	**Vatic**	★**4804**
HCMOS Library	Hughes	4479-18
HD/CTC	Teletek	2038-12
HDG	AD	¶ 394-1
HDG Series	**AD**	★**3115**
		¶ 394-2
HDXXXXRH	**Harris**	★ **660**
HELIX	SilvarLisco	4958-1
		5062-55
HELP	Harris	4477-2
HICHIP	Genrad	5018-3
Hierarch Sch Ed	Cadnetix	5041-61
High Volt	Micro-Rel	4480-14
High Voltage	Micro-Rel	4480-15
Highland	Mostek	4925-3
HIGHLAND 2	Mostek	4460-41
		4483-63
HILO	Genrad	4958-2
		5050-85
		4971-3
		4461-3
		4483-3
		4483-73
HITACHI DA SYSTEM	Hitachi	4459-66
		4459-68
		4459-71
HMOS Library	VTI	4482-21
		4482-22
HSC Cell	**Harris**	★**4656**
HSCXXXRH	Harris	4479-16
HSCXXXXRH	**Harris**	★ **661**
HSDXXXXRH	**Harris**	★ **658**
HSPICE	**MetaSoft**	★**5112**
		4946-3
		5056-67
I/O A+	AppBusComp	2031-20
IC Designer	Valid	5003-1
IceboxA	RELMS	1821-2
IceboxT	RELMS	1821-3
IDAM	Golden	2005-15
IDEA 1000	Mentor	4460-6
		4483-37
Idea Sta	VAMP	4941-1
Idea Station	Mentor	4923-2
IDEA STATION	Mentor	4459-13
		4459-19
		4459-67
		4459-72
		4460-15
		4460-18
		4460-27
		4461-17
		4466-27
		4483-27
		4483-69
		4484-45
		4484-47
Ideal	**Tex/CAE**	★**5114**
		4958-3
IDEAL	Tex/CAE	4460-25
		4483-43
		4483-44
IDEASTATION	Mentor	4459-5
		4460-33
		4461-38
		4483-49
		4484-30
IEDS	Intergraph	4982-3
		5054-61
IEDS/TANCELL	Intergraph	4483-25
ILA	**Tex/CAE**	★**5114**
ILOGS	Simucad	5064-37
Impel Library	IMP	4480-1
		4480-2
		4480-3
Integrated Elec Des Sys	Genrad	5054-67
Intellec Series II	Intel	¶ 374-13
IntellecIII	Intel	1815-12
IntelliTest	Caedent	5036-3
INTER	Signetics	4481-24
		4481-25
Inter Rules Checker	**Daisy**	★**5108**
		5014-2
InterceptJr	Intersil	2023-19
INTERCHIP A	IntMicCir	4449-1
INTERCHIP B	IntMicCir	4449-2
INTERCHIP C	IntMicCir	4449-3
INTERCHIP D	IntMicCir	4449-4
INTERCHIP E	IntMicCir	4449-6
INTERCHIP F	IntMicCir	4449-7
Interpro	Intergraph	4919-1
IOP	Cromemco	2030-15
IPC	Cadam	4983-1
ipc-MEM	Vesta	2041-46
iPDS	Intel	1815-15
ISL	Signetics	4481-23
ISO-HCMOS I	Mitel	4480-20
KDS	Kontron	1815-17
KLGA	Matra	4993-3
KPDS	Kontron	1817-6
KPI/KSE/KSA	Kontron	1817-7
Laser	Teradyne	4959-1
		5066-1
		4972-1
LCAD	Fujitsu	4459-30
		4459-35
LCD-III	Hitachi	1407-11
LCD-IV	Hitachi	1407-12
LDS	Daisy	5054-85
	LSILogic	4460-24
		4483-48
LDS/Apollo W/S	LSILogic	4919-2
LDS/Sun W/S	LSILogic	4920-1
LDS/uVAX W/S	LSILogic	4919-3
LEAP	Applicon	5041-25
LEIA	**Tex/CAE**	★**5114**
		5003-2
LIBSIM	**ACASI**	★**5101**
		4959-2
		5039-1
Lightning One	Lomas	2027-4
Linear CAD I	MicroLinear	4925-1
Little Board	Ampro	2015-14
Little Board/PLUS	Ampro	2015-15
LLXXXX	LSILogic	4488-12
Logic Des Sta	HP	4918-2
Logic Design	CompVision	4912-3
Logic Designer AT	Valid	4938-1
Logic Evaluator	**Zycad**	★**5120**
		5025-1
		5068-19
Logic Master	IntMeasSys	5034-1
		5054-49
LOGICIAN	Daisy	4459-4
		4459-11
		4459-17
		4459-43
		4459-65
		4459-69
		4459-70
		4460-10
		4460-26
		4460-31
		4460-39
		4461-16
		4461-20
		4461-26
		4461-33
		4461-36
		4483-9
		4483-20
		4483-34
		4483-45
		4483-61
		4483-65
		4483-68
		4484-11
		4484-15
		4484-19
		4484-26
		4484-28
		4484-41
		4484-48
		4484-54
LogicSim	VAMP	4959-3
Lognet	ESP	5048-85
LOGSIM	SilvarLisco	4960-1
Low Volt	Micro-Rel	4480-16
Low Voltage	Micro-Rel	4480-17
LPHDI	CIC	4478-14
LPKF-COLOR CAM	LPKF-Pacific	5037-1
LPM-DSIO	WinSystems	2041-20

PART NUMBER INDEX

Base Number/Device	Source	Page-Line
LPM-PIO	WinSystems	2040-60
LPM-UMC	WinSystems	2041-52
LSS	Tatum	4960-2
LTSZ	LinearTech	3402-161
Mach	**SiliconSol**	★**5113**
		5025-2
		5025-3
		5031-1
Macro Designer	Valid	4938-2
Macro Matrix	AMCC	4485-1
MACROBLOCK	**Holt**	★**4662**
Macrologic Bipolar	Fairchild	1411-15
Macrologic CMOS	Fairchild	1411-16
MAGA A¢	AppBusComp	2031-32
MALV Series	MasterLogic	4480-7
MAP	**Motorola**	★**1658**
MASG Series	MasterLogic	4480-8
MASKAP	Phoneix	4483-38
Maxi II	RACAL	4929-2
		4983-2
		5059-19
MCA	Interdesign	4442-30
MCA-series	Motorola	3403-82
MCA Des Sys	Motorola	5055-25
MCAD	MicroPwr	4925-2
MCAIII	**Motorola**	★**4720**
MCB	Interdesign	4442-31
MCC	Interdesign	4442-32
MCD	Interdesign	4442-42
MCE	Interdesign	4442-37
MCF	Interdesign	4443-6
MCG	Interdesign	4443-7
MCM-CLK	WinSystems	2039-4
		2039-5
MCM-D/A	WinSystems	2041-31
MCM-DSI/O	WinSystems	2041-11
MCM-HDI	WinSystems	2040-32
		2041-24
MCM-SBC	WinSystems	2017-15
MCM-SPI/O	WinSystems	2041-12
MCM-UMC	WinSystems	2041-61
		2042-3
MCS	Bedford	2007-40
MCU	Cromemco	2038-33
MDFS	Daisy	4972-2
MDS	Matra	4920-2
		4460-30
MDS ON DEC VAX 11/785	Matra	4483-54
MDS ON IBM PC XT/AT	Matra	4483-55
MDX-PIO	Mostek	¶ 379-13
MECL	Motorola	¶ 358-2
		¶ 358-3
		¶ 358-6
		¶ 358-9
Meds	SciCalc	4994-1
		4997-2
		5003-3
MEGA LOGICIAN	Daisy	4483-6
Megacell Layout Ed	Plessey	4997-3
MegaFAULT	**Daisy**	★**5108**
		4972-3
MegaFault	Daisy	5031-2
MegaLogician	**Daisy**	★**5108**
		5026-1
		5031-3
MEGALOGICIAN	Daisy	4483-21
		4484-49
MEGARAM	Lomas	2038-35
MEM-MAX	VersaLogic	2042-5
Mercury	CompVision	4947-1
Merlyn-G	Tex/CAE	4994-2
		5065-55
Merlyn-PCB	**Tex/CAE**	★**5114**
		4983-3
		5065-61
Merlyn-S	**Tex/CAE**	★**5114**
		4998-1
		5065-67
MFAxx	Sahni	4464-44
MICAD	EEsof	4984-1
Micro-Cap II	Spectrum	4947-2
Micro-logic	Spectrum	4960-3
MICROLINK	**Tex/CAE**	★**5114**
MicroMAP	**Motorola**	★**1658**

Base Number/Device	Source	Page-Line
Microwave SPICE	EEsof	4947-3
MIDAS	ControlData	4460-53
MINIBOX	Heurikon	1813-16
MLA	Interdesign	4464-1
MLB	Interdesign	4463-10
MLZ-DAQ	Heurikon	2009-18
MLZ-VDC	Heurikon	2009-25
MM1-MSC	ContLogic	2013-5
MMC/EPA	Brachman	2037-30
MOA	Interdesign	4463-33
		¶ 444-9
		¶ 444-11
MOB	Interdesign	4463-40
		¶ 444-9
		¶ 444-11
MOC	Interdesign	4463-31
		¶ 444-11
MOD	Interdesign	4463-32
		¶ 444-11
MOE	Interdesign	4463-35
		¶ 444-9
		¶ 444-11
MOF	Interdesign	4463-42
		¶ 444-9
		¶ 444-11
MOG	Interdesign	4463-38
		¶ 444-9
		¶ 444-11
MOH	Interdesign	4463-37
		¶ 444-9
		¶ 444-11
MOJ	Interdesign	4463-34
		¶ 444-9
		¶ 444-11
MOL	Interdesign	4463-41
		¶ 444-9
		¶ 444-11
MOLE	National	1819-5
MOM	Interdesign	4463-44
		¶ 444-9
MON	Interdesign	4463-45
		¶ 444-9
MONOCHIP	Interdesign	¶ 357-10
		¶ 357-11
		¶ 362-3
		¶ 407-16
		¶ 410-4
		¶ 410-7
		¶ 410-10
		¶ 417-3
		¶ 419-4
		¶ 419-10
		¶ 419-11
		¶ 419-17
		¶ 421-15
		¶ 421-16
		¶ 422-13
		¶ 424-15
		¶ 425-16
		¶ 427-13
		¶ 428-10
Monochip	Interdesign	¶ 427-11
		¶ 444-14
		¶ 444-15
		¶ 444-16
Monochips	Interdesign	¶ 418-16
MOP	Interdesign	4463-43
MOQ	Interdesign	4463-36
MOR	Interdesign	4463-39
MOS IID	**RCA**	★**4742**
MPF	**Vatic**	★**4804**
		3398-11
MSII	STC	4465-5
MSIMON	Mentor	4948-1
MSPICE	Mentor	4948-2
MSPICE Station	Mentor	4923-3
MUA	Interdesign	4463-46
MUB	Interdesign	4463-47
MUC	Interdesign	4463-48
Multicell	VLSIDesign	4494-6
MULTISIM	**Tex/CAE**	★**5114**
MXD	Pacific	2036-23
MXK	Pacific	2036-22
N(dot)	ENDOT	5037-2
NDS-I	Intel	1815-13
NDS-II	Intech	1815-10

Base Number/Device	Source	Page-Line
NETED	Mentor	5055-43
NMOS	Plessey	4481-7
	TLSI	4482-7
NMOS Library	ArrayTech	4478-3
	IntCirSys	4479-23
		4479-24
	MicroTech	4480-13
	TLSI	4482-6
Occam	Inmos	1461-57
		1464-47
		1464-74
OCTAPORT	Lomas	2038-21
OCTRT	Cromemco	2038-27
Omnicard	Octagon	2021-42
OPTIMATE	SilvarLisco	4984-2
ORI	**Matra**	★**1908**
P-SILOS	Simucad	4961-2
PaCMOS	RCA	4491-36
PACMOS II	**RCA**	★**4742**
		4481-9
PACMOS IID	RCA	4481-10
PACMOS III D	RCA	4481-8
PACMOS SOS	**RCA**	★**4742**
		4481-15
PALASM	MMI	5056-79
Parallel SPICE	Elxsi	4948-3
PATHLINK/AUTOLINK	Mentor	4984-3
		5056-55
PC	DraftingDyn	4985-1
PC-CAPSs	PCAD	5057-55
PC-CARDS	PCAD	4986-2
		4986-3
PC-USPICE	ESP	4949-1
pc Dial/Log	CMCIntl	2034-15
PC LOGS	PCAD	5058-67
PCB	PCAD	4928-1
		4928-2
		4928-3
		4986-2
		4986-1
		4986-3
PCB Design	VAMP	4985-2
PCB Layout	AdvEngSol	4985-3
	Applicon	4986-1
PCB Station	AdvEngSol	4903-3
PCB W/Sys	**Tex/CAE**	★**5114**
		4933-2
Personal Des Sta	Vectron	4941-3
Personal Engineer	CompVision	4913-1
PERSONAL ENGINEER	CompVision	4466-26
		4484-44
		4484-46
Personal Logic Des Sta	HP	4918-3
PERSONAL LOGICIAN	Daisy	4459-12
		4459-18
		4459-44
		4483-15
		4483-22
Personal Silicon Foundry	**DataI/O**	★**5109**
	FutureNet	4917-1
PF-AP	Proximity	2030-1
PF-PC	Proximity	2031-17
PFG	ViewLogic	4973-1
PHLEX	CompVision	5014-3
Phys Mod Ext (PMX)	**Daisy**	★**5108**
		5019-1
PLD Model Lib	Mentor	5008-1
PLDSMOD	Altera	5040-1
PLDtest	DataI/O	4973-2
PLE	Altera	5040-67
		5040-73
Polyuse k	**Vatic**	★**4804**
		4457-40
Polyuse U	Vatic	4465-20
Power SPICE	Shiva	5061-43
PRANCE	AutoSys	4987-2
PRANCE/SIGMA REMOTE	AutoSys	4987-3
Precise	**EES**	★**5110**
		4949-2
PRI	Cromemco	2038-28

Base Number/Device	Source	Page-Line
Princess	SilvarLisco	5004-1
Pro Designer	Valid	4938-3
Probe	Waferscale	4482-25
PROBE	Waferscale	4495-24
Programmable Industrial Controller	DEC	¶ 366-10
PROPRIETARY	Exar	4466-2
		4466-4
		4466-6
		4466-8
	Mitsubishi	4460-34
	Sahni	4466-16
	VTI	4461-30
		4484-23
PSPICE	Chancellor	4949-3
	MicroLinear	4950-1
	Microsim	4950-2
	ValleyData	4950-3
	ViewLogic	4951-1
PSPICE/Turbine	Microsim	5021-3
		5022-1
Q-CHIP	**TriQuint**	★**4801**
		844-108
		851-17
		4457-9
Q-chip	TriQuint	4457-8
QDRT	Cromemco	2030-16
QUASAR	AMCC	4459-1
QUICKFAULT	Mentor	4973-3
QUICKSIM	Mentor	4961-3
		5056-61
QUICKTIME	Mentor	4961-3
QUIKIE	Tek/ICO	4466-23
QWIKDRAW	Augat	5037-3
		5041-43
RCA DESIGN SYSTEM	RCA	4461-21
		4461-24
		4461-28
		4484-13
		4484-17
		4484-21
Real Chip	Valid	5019-2
		5066-67
Real Fast	Valid	5026-2
Real Model	Valid	5019-3
		5026-3
Redboard	RACAL	4988-1
		5059-19
Redcad	RACAL	4929-3
Redlog	RACAL	5059-73
Redsim	RACAL	4930-1
Redsim CADAT	RACAL	4962-1
		4974-1
RH Gate Array	**Harris**	★ **657**
RL Series	Reticon	¶ 423-16
Route Editor	**Cadnetix**	★**5102**
		4988-2
		5041-79
RSU	Intelicom	2046-44
S80-CPU	Acco	2009-16
SA Series	**Mostek**	★**4717**
		4480-22
SAJI-IV	Harris	4479-17
SAJI V	Matra	4488-48
SALT	ControlData	4962-2
Satellite	NCA	6 4926-1
SAXX, SBXX, STANDARD CELLS	Mostek	4490-46
SB Series	Mostek	4480-21
SBC-I	Teletek	2021-16
SBC-II	Teletek	2021-14
SBSxFDC	SingleBoard	2032-37
SBX/SASI	EnergySci	2032-49
SCALD	Valid	5066-73
		4459-14
		4459-20
		4459-33
		4459-38
		4461-18
		4466-13
		4466-22
		4483-11
		4483-30
		4483-33

Base Number/Device	Source	Page-Line
SCALD STATION	Valid	4483-67
		4483-70
SCALD STATION/REDL CHIP	Valid	4484-53
SCALD SYSTEM	Valid	4460-28
		4484-7
		4484-10
SCALDSTAR	Valid	4461-25
		4461-29
		4484-14
		4484-18
		4484-22
SCALDSYSTEM	Valid	4459-6
		4460-35
		4461-40
		4483-52
		4483-53
		4484-32
SCARP	Plessey	4992-2
SCC	Cromemco	2021-11
SCEPTRE	GouldAMI	4483-24
SCEPTRE II	GouldAMI	4918-1
		4962-3
		4998-2
		5015-1
Schedit	CompVision	5046-48
Schematic Capture	Versatec	5068-1
Schematic Designer	Valid	4939-1
Schematics	VAMP	5067-67
SCICARDS	SciCalc	4988-3
		5060-55
SCMOS I	Waferscale	4482-27
SCMOS II	Waferscale	4482-26
SCSI/IOP-STD	Ampro	2019-30
SCSI/QIC	EnergySci	2032-50
SCX-WS, SCX2-WS	National	4491-13
SDD	Cromemco	2038-10
SDI	Cromemco	2038-20
SDS	SilvarLisco	4483-5
Server Station	Mentor	4924-1
SFA	**Tex/CAE**	**★5114**
		4974-2
SHM-HUMC	**Datel**	**★3163**
		3404-4
SHM-HUMM	**Datel**	**★3160**
		3404-5
SHM-HUMR	**Datel**	**★3163**
SIERRA CUSTOM DESIGN SYSTEM	Sierra	4484-24
		4484-25
Silicon Compilers	**VTI**	**★4812**
Silicon Design System	Ferranti	4916-1
Siliconmaster	Daisy	5010-1
SILOS	Simucad	4963-1
		5064-37
Sim	Mostek	4963-2
SimIC	Mosaid	4951-2
		5057-7
Simon	ECAD	4951-3
SIMULOG	Chancellor	4964-1
SIMULOGIC	ValleyData	4963-3
SLAV	Aldec	4964-2
SLAV/HASS	Aldec	4904-1
SLM CMOS	GouldAMI	4479-5
smARTWORK	Wintek	4989-1
Software Dev W/Sys	**Tex/CAE**	**★5114**
		4933-3
SPICE	RELMS	1821-4
	UCBerkeley	4466-12
		4466-21
Spice Accelerator	Weitek	5022-2
SPICE Engine	Shiva	5022-3
SPICE Plus	AnalDesTools	4952-1
Stand Alone	NCA	4926-2
Stand Alone Des Sta	Vectron	4942-1
Standard	NCA	4926-3
Standard Cell	**Motorola**	**★4719**
Standard Cell W/Sys	**Tex/CAE**	**★5114**
		4934-1
Standard Edge	SDA-Systems	4931-2
		4998-3
Starplex	National	¶ 376-2
		¶ 383-2
STARPLEX	National	1819-6
STARPLEXII	National	1819-7
STD CELL	iLSi	4487-18
STI-DIO	Solarcom	2040-67
STI-DIO-C	Solarcom	2040-68
STI-STD	Solarcom	2042-44
STI-STD-CK	Solarcom	2042-42
Structured Cell	LSILogic	4480-5
Structured Cost W/Sys	**Tex/CAE**	**★5114**
Structured Cust W/Sys	Tex/CAE	4934-2
SUMMARY	AdvEngSol	4903-1
	CaseTech	**★5106**
		4911-1
	Chancellor	4911-2
	Daisy	**★5108**
		4913-3
	Mentor	4920-3
	Valid	4936-1
	VAMP	4940-2
SuperboardII	OhioSci	2013-18
Supercell	Motorola	4491-4
	NCR	**★4722**
		★4727
Supercells	NCR	4491-27
Supermacros	Fairchild	4485-17
Suppermacros	Fairchild	4485-17
SUXES	**MetaSoft**	**★5112**
Symbolic Layout	CompVision	5004-2
SYMCAP	Chancellor	4952-2
		4989-2
SYMGRAPH	Chancellor	4989-3
		5004-3
	ValleyData	4990-1
		5005-1
Symgraph	ValleyData	4940-1
Sys Development Engine	Zycad	5027-1
SYSCAP	ControlData	5047-43
System-on-a-chip	**MicroPwr**	**★4678**
System Designer	Valid	4939-2
System One	Cromemco	1811-20
Systemaster	Teletek	2021-15
SystemasterII	Teletek	2021-17
T-Arrays	Calma	4994-3
T-Boards	Calma	4990-2
Tancell	Tangent	4999-1
		5054-76
Targa I	CMCIntl	2034-14
Targa II	CMCIntl	2034-12
Targa III	CMCIntl	2034-13
TATTLETALE II	Onset	2005-14
TBD	Mostek	2040-41
TCAT	Calma	4974-3
Techplus	Calma	4977-3
TEGAS	Calma	4964-3
		5043-61
		4459-3
		4459-41
		4459-50
		4459-63
		4483-12
TEGAStation	Calma	4910-1
TEGASTATION	Calma	4459-42
		4460-37
		4483-13
		4483-59
TEKSTATION 2000	Tex/CAE	4460-36
TEKWRITER	**Tex/CAE**	**★5114**
Test&Meas W/Sys	**Tex/CAE**	**★5114**
Test & Meas W/Sys	**Tex/CAE**	**★5114**
		4934-3
Test Edge	SDA-Systems	4975-1
Test Station	Mentor	4924-2
TEXSIM	Calma	4460-7
TEXSIM/B	Calma	4965-1
		5044-13
The WorkSystem	VIA-Systems	4942-3
TI Des Sys	TI	5066-55
Timing Analyzer	SDA-Systems	4965-2
TMA	**Tex/CAE**	**★5114**
TMP	National	¶ 372-10
Touchstone	EEsof	4952-3
Transputer	Inmos	1465-22
		844-58
TRT	Cromemco	2038-31
TSCAN	Calma	4965-3
Tubo Chip	**Tex/CAE**	**★5114**
Turbo Chip	**Tex/CAE**	**★5114**
		5020-1
U-Series	**Hughes**	**★ 683**
UDL	Orion	1819-14
ULA Check	Ferranti	5015-2
ULA Series	MCE	4480-11
ULA Silicn Comp	Ferranti	4999-2
ULA Silicon Comp	Ferranti	4995-1
		5005-2
		5010-2
		5049-19
UniCELL	MCE	4480-9
UniCELL MGA	MCE	4480-10
UNIX	AT&T	1465-1
USPICE	ESP	4953-1
	NCA	4953-2
UTMOST	Silvaco	5038-1
V-Series	**Hughes**	**★ 683**
V-Systems	**Tektronix**	**★5117**
		1821-14
VALE	CompVision	5005-3
Valid ROUTE	Valid	4990-3
Valid SIM	Valid	4966-1
Valid TIME	Valid	4966-2
Validation Designer	Valid	4939-3
Varicell	Torric	4482-8
VECHECK	Calma	5015-3
VERILOG	Gateway	4966-3
		5050-43
VERILOG-XL	Gateway	4967-1
		5027-2
		5027-3
		5028-1
VERILOG-XL-1	Gateway	5027-2
VERILOG-XL-2	Gateway	5027-3
VERILOG-XL-3	Gateway	5028-1
VERSAdos	**Motorola**	**★2108**
VERSAmodule	**Motorola**	**★2114**
		2027-11
VH Library	Fujitsu	4478-19
Viewsim	ViewLogic	4967-2
Visula	RACAL	4930-2
		4991-1
		5059-19
Visula CADAT	RACAL	4967-3
VL2000	VTC	4494-52
VLA CADAT	**Cadnetix**	**★5102**
		5008-2
VLSI	Factron	4915-2
		5006-1
VLSI DESIGNER III	**CAECO**	**★5105**
VLSI DESIGNER IV	**CAECO**	**★5105**
VLSI DESIGNER V	**CAECO**	**★5105**
VLSI DESIGNR V	**Tex/CAE**	**★5114**
VLSI DESYGNER III	**CAECO**	**★5105**
		4908-1
VLSI DESYGNER IV	**CAECO**	**★5105**
		4908-2
VLSI DESYGNER V	**CAECO**	**★5105**
		4908-3
VLSI DRC	Factron	5016-1
VMC Series	**VTI**	**★4810**
VME-HSMEM	IntSolutions	2045-23
VME-IMIO	IntSolutions	2044-36
VME-MEMI	IntSolutions	2045-24
VME-NOCI	Mostek	2044-49
VME-SBC	Mostek	2023-15
VME-SCSI	IntSolutions	2044-45
VMEbus	**Motorola**	**★2109**
VMEmodule	**Motorola**	**★1659**
VMEmodules	**Motorola**	**★2108**
VMXF	Pacific	2045-16
VO	Calay	4991-2
		5042-19
VR SYSTEM	Tex/CAE	4461-5
		4484-2
VSC Series	**VTI**	**★4809**
		4482-18
WACC	Motorola	4460-46
		4460-51
		4460-55
		4460-59
		4460-63
		4460-66
		4460-68
		(Continued)
WACC	Motorola	4460-70
		4460-73
		4460-77
		4461-11
WDI-II	Cromemco	2038-32
Workview	ViewLogic	4943-1
WRAPID	Augat	5038-2
		5041-43
	dataCon	5038-3
		5048-13
XDOS	Motorola	¶ 375-7
XR-CMA	**Exar**	**★4618**
		4442-1
XR-CMB	**Exar**	**★4618**
		4442-4
XR-CMC	**Exar**	**★4618**
		4442-5
XR-CMD	**Exar**	**★4618**
		4442-8
XR-IIL-CHIP	Exar	¶ 359-8
Z-SCC	Zilog	¶ 377-15
Z8-SCB	Zilog	2013-4
Z80-CPU	SGS	1460-69
Z80-CTC	SGS	1460-92
	Zilog	¶ 382-10
Z80-DART	SGS	1461-17
	Zilog	1461-19
Z80-DMA	SGS	1460-109
Z80-PIO	SGS	1460-123
Z80-SIO	Mostek	¶ 370-5
	SGS	1460-137
	Zilog	1461-1
		¶ 373-12
Z80/A	SGS	1429-20
Zodiac	SGS	4481-18
ZPU	Cromemco	2021-10
ZYP	ZyMOS	4484-43
ZyPSIM/ZySPICE	ZyMOS	4466-30

Last Page This Section. Next Page 300.

IS THIS A BORROWED COPY?

Avoid the hassle and order your own personal two-volume set of IC MASTER. It's the surest way to simplify your IC selection efforts.

Only IC MASTER allows you to examine and compare the specifications, relative strengths, and weaknesses of all devices in serious contention for your application. And only IC MASTER brings you actual manufacturers' data sheets, allowing you to make complete and definitive device selections.

You can order IC MASTER simply by charging it to your VISA or Master Card credit card.
To place your order (USA only)
call now: (408) 249-6800/(516) 227-1300.
To order outside the USA,
see list of authorized IC MASTER
distributors on page 1471 of Vol. I.

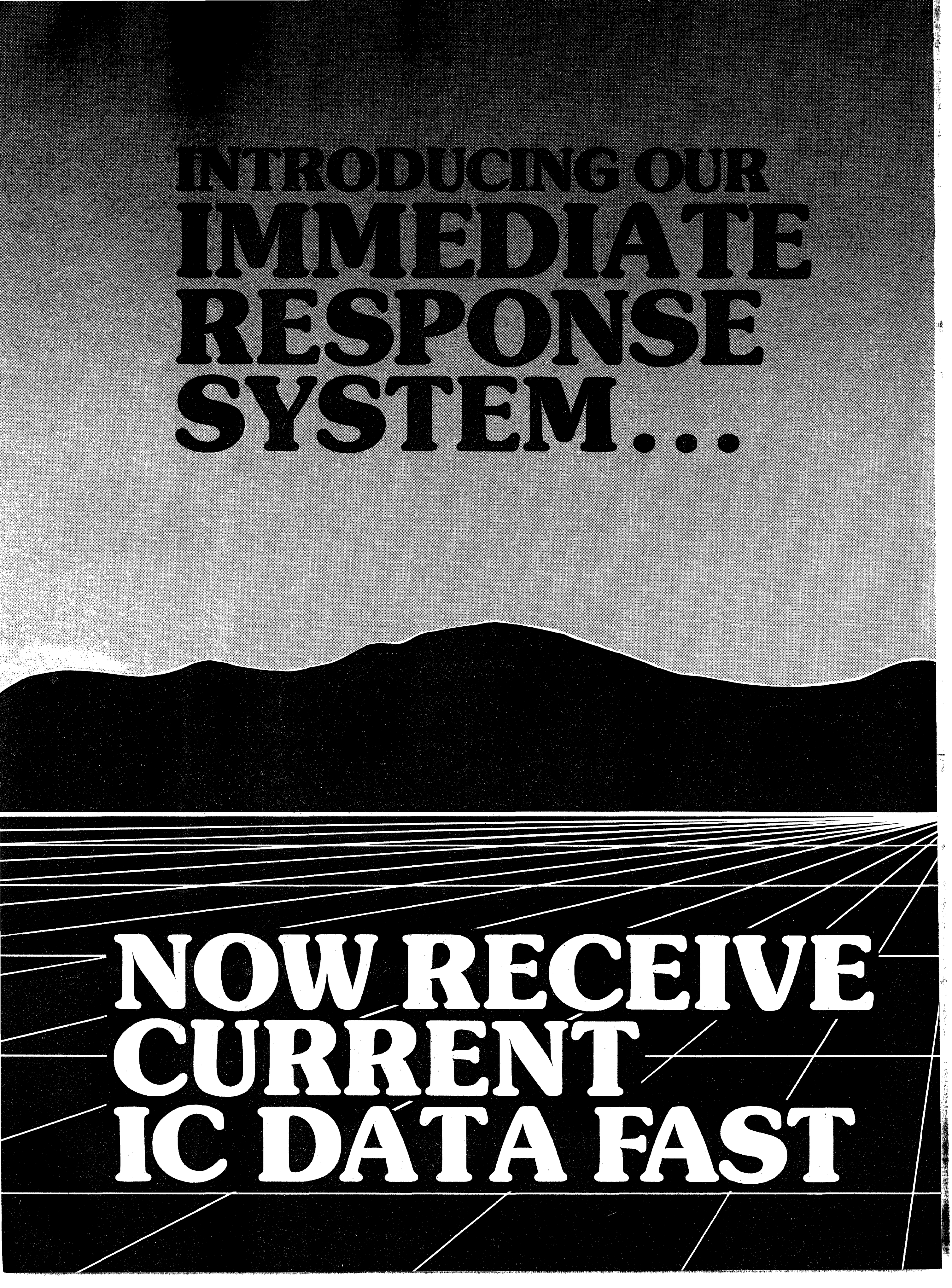
INTRODUCING OUR
IMMEDIATE
RESPONSE
SYSTEM...
NOW RECEIVE
CURRENT
IC DATA FAST

Dear IC MASTER User:

ANNOUNCING . . . A **new**, innovative way to request and receive up-to-date IC product data.

The IC MASTER introduces an IMMEDIATE response system. Operational **24 hours a day, 7 days a week**, you can now phone in your requests for the most current IC product data available from IC manufacturers who have product data sheets in the IC MASTER, at no cost to you. Here's all you do:

Step 1 **Phone 800-443-0100** and ask for Extention #518

Step 2 When asked, simply tell the operator the name(s) of the manufacturer whose part you are interested in . . . the **specific** part number you want information on . . . if you want a data sheet and/or an application note . . . and if you want a salesperson to call.

Step 3 Provide you name, title, company, address, and phone number.

That's all you do! We do the rest. Your request will be in the hands of the company you inquired about within 24 hours.

We will follow up within a week to make sure your request was expedited and your needs were met.

It's important to us that we provide you with the best source of up-to-date IC product data available in the market . . . we've been doing it for over ten years, and we aren't stopping now.

We hope this **added new** service will contribute to a further reduction in your IC selection time.

call 800-
443-0100
518 (ext.)

WHAT'S NEW IN IC Updates

DON'T MISS THE IC UPDATES

The updates
keep your IC Master
current the year 'round.

Look for them in the

SPRING, SUMMER

and **FALL**

and remember our year 'round
immediate response system
toll free number for up-to-date
product information: **800**
443-0100
(EXT.) **518**

WHAT'S NEW IN IC MASTER

DON'T MISS THE NEW SURFACE MOUNT DEVICE IC SECTION

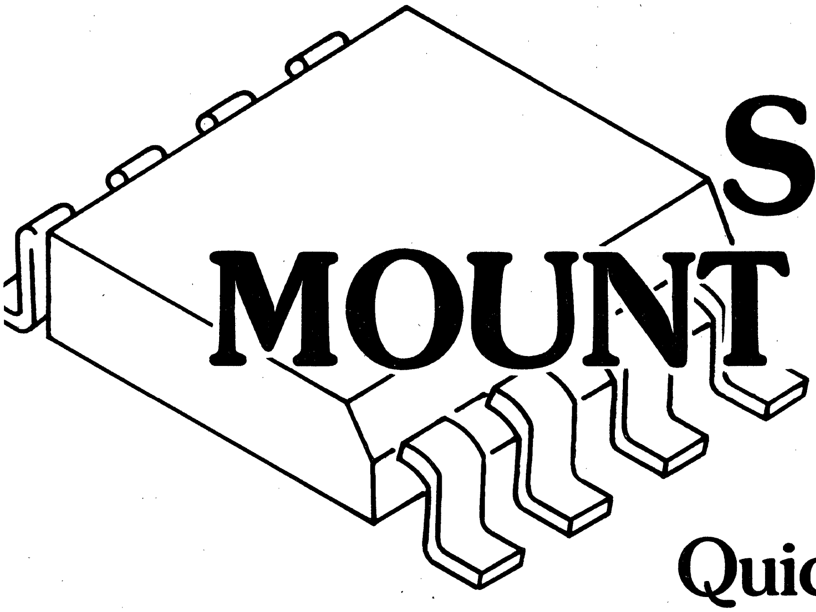

Quickly shows you by base number and package, what surface mount devices are available and from which manufacturers.

Volume II, Page 5201

WHAT'S NEW IN IC MASTER

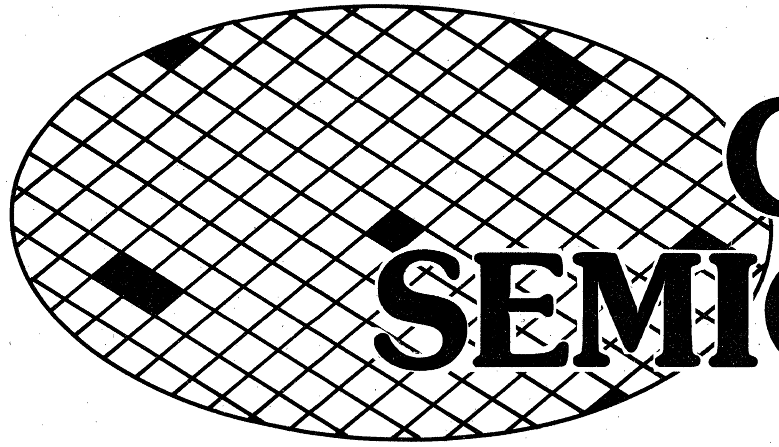

DON'T MISS THE EXPANDED CUSTOM/ SEMICUSTOM IC SECTION

Lists software design tools available for Programmable Logic Devices, Gate Arrays, Standard Cells, and Linear and Linear/ Digital Arrays. Major macros in VLSI/LSI Macrocell Libraries are listed by source.

Volume II, page 4401

WHAT'S NEW IN IC MASTER

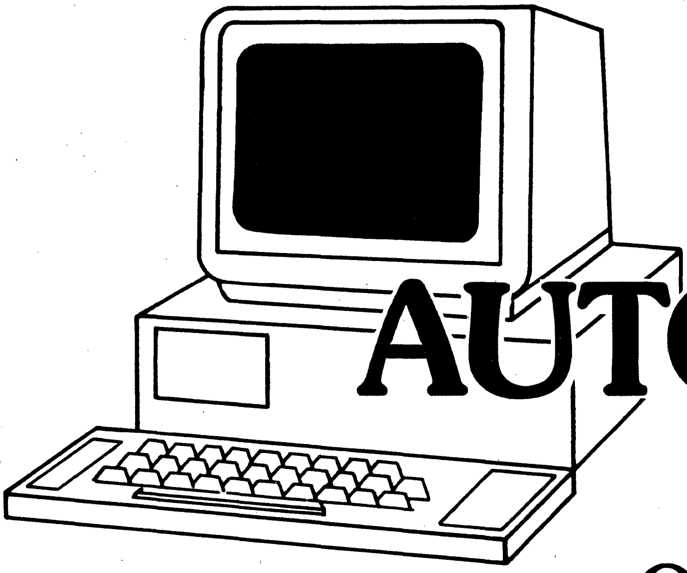

DON'T MISS THE NEW DESIGN AUTOMATION IC SECTION

Quick and easy way to determine relationships between workstations, computers, software, semicustom manufacturers and CAE/CAD providers.

Volume II, page 4901

PART NUMBER GUIDE

Each IC manufacturer has his own special method of identifying products, usually through a system of logos, device number prefixes and suffixes. This Part Number Guide is arranged alphabetically by manufacturer and describes each company's part number system. JAN nomenclature is also covered.

Manufacturer Device Identification | Part Number: Prefix | Part Number: Suffix | Example

ADVANCED MICRO DEVICES

Note: Alternate source devices follow original manufacturer's part number and marking system.

Prefix

Functional Group

Code	Group
21	MOS Memory
25	MSI
26	Computer Interface
27	Bipolar Memory & EPROM
28	MOS Memory
29	Bipolar Microprocessor
54/74	Same as 25
60	Analog, bipolar
61	Analog, bipolar
66	Analog, bipolar
79	Telecommunications
80	MOS Microprocessor
81	MOS and Bipolar Peripherals
82	MOS and Bipolar Peripherals
90	MOS
91	MOS RAM
92	MOS
93	Bipolar Logic, Memory
94	MOS
95	MOS Peripherals
1004	ECL Memory
104	ECL Memory
PAL	Program Logic
98	EEPROM
99	CMOS Memory

Type

Code	Type
L	Low Power
S	Schottky
LS	Low Power Schottky
(Blank)	Standard

Suffix

Package

Code	Package
D	Hermetic DIP
P	Molded
F	Flat
X	Dice
L	Leadless chip-carrier

Temperature Range

Code	Range
C	Commercial
M	Military

Example

Prefix AM25 — **Device** S 05 — **Suffix** D M

AM25 — Functional Group

S — Type

05 — Device Number

D — Package

M — Temperature Range

ANALOG DEVICES

Prefix

Code	Meaning
AD	Analog Devices
HA	Hybrid A/D
HD	Hybrid D/A

Suffix

General Information

Code	Meaning
A	Second Generation
DI	Dielectrically Isolated
Z	Operation on ±12V

Temperature Range

Code	Range
A,B,C	Industrial
J,K,L,M	Commercial
S,T,U	Military

Package

Code	Package
D	Hermetically Sealed Dip, ceramic or metal
E	Leadless chip carrier
F	Ceramic Flatpack
G	Pin grid array
H	Metal can, hermetically sealed
M	Metal can DIP, hermetically sealed — computer labs
N	Plastic DIP
Q	Cerdip
CHIPS	Monolithic chip

Example

Monolithic and Hybrid ICs

Prefix AD — **Device** 7516 — **Suffix** AJN

A — General Information

J — Temperature

N — Package

Video Hybrid Products

Prefix HAS — **Device** 1015 — **Suffix** EMB

E — ECL

M — Package

B — Mil Screening

BROOKTREE

Prefix

Family

Code	Family
100-199	D/A Converters
200-299	A/D Converters
300-399	Video Amplifiers
400-449	Color Lookup Tables
450-499	RAMDACS

Suffix

Package

Code	Package
C	Ceramic
P	Plastic
M	Metal
L	Leadless chip carrier
G	Pin grid array
F	Flat package

Example

Prefix Bt — **Device** 100 — **Suffix** K C M

100 — Family

K — Temperature Range and Grade

C — Package

M — High-Rel Screening

Manufacturer Device Identification	Part Number Prefix	 Suffix	Example
BROOKTREE (continued)		**Temperature Range and Grade** **J** Low grade **K** Middle grade 0°C to 70°C **L** High grade **A** Low grade **B** Middle grade −25°C to +85°C **C** High grade **R** Low grade **S** Middle grade −55°C to +125°C **T** High grade **EVM** Evaluation module	
BURR-BROWN (Data Products Division) BURR-BROWN®	**General Information** **A** Improved Performance **L** Latched **Z** ±12V supply **HT** Wide Temp Range **Temperature Range** **J,K,L** 0°C to +70°C **A,B,C** −25°C to +85°C **R,S,T,V** −55°C to +125°C	**Package** **M** Metal Can, Hermetic **L** Leadless Chip Carrier **P** Molded Plastic **H** Ceramic, Hermetic **G** General Ceramic **Screening** **Q** Enhanced Reliability **IQM** MIL-STD 883 Screening Methods	**Prefix** **Device** **Suffix** **ADC** 803 XXXX General Information Temperature Range Package Screening
(Analog Products Division)	**Temperature Range** **H,J,K,L** 0 to 70°C **A,B,C** −25°C to +85°C **R,S,T,V** −55°C to +125°C	**Package** **M** Metal Can, Hermetic **P** Plastic **G** Ceramic **Screening** **Q** Enhanced Reliability **IQM** MIL-STD-883 Screening Methods	**Prefix** **Device** **Suffix** **OPA** 111 XXX Temperature Range Package Screening
(Military Products Division)	**Temperature Range** **V** −55°C to +125°C **U** −25°C to + 85°C **W** −55°C to +125°C (None)	**Package** **M** Metal **L** Chip Carrier **HiRel Designation** Mil 883/B (None)	**Amplifiers/Multipliers/ADC's/VFC's:** **Prefix** **Device** **Suffix** **OPA** 105 XM/XXX Temperature Range Package HiRel Designation
	Temperature Range **V** −55°C to +125°C **U** −25°C to + 85°C (None) **Input Coding** **CBI** **COB** **Output** **V** Voltage **I** Current	**HiRel Designation** Mil 883/B (None)	**DAC's:** **Prefix** **Device** **Suffix** **DAC** 87 X-XXX-X/XXX Range °C Input Coding Output HiRel Designation
CHERRY SEMICONDUCTOR	**CS** Cherry Semiconductor **D** Diode Flip Chip **N** NPN Flip Chip **P** PNP Flip Chip	**Package** **0** Loose Component **D** Dual-In-Line **P** "Pill," Small Round Package **T** TO-Can **4** 4 Leads **8** 8 Leads **Circuit Style** **B** National Dual Source **S** Signetics Dual Source	**Prefix** **Device** **Suffix** **CS** 122 0D8 **CS** 555 B **D** 823 Package/Circuit
CIRCUIT TECHNOLOGY			**Prefix** **Device** **Suffix** **CT** 3078 A Company ID Modification (If used)

Manufacturer Device Identification	Part Number Prefix	Part Number Suffix	Example

CYBERNETIC MICRO SYSTEMS

(CMS may be used instead of logo)

Prefix

CY Chip
CYP IC programmer
CYB Development board
CYS Interface software

Description

CY232 Parallel/Serial Interface Device
CY250 Multi Chip Controller
CY300 LCD/Console Controller
CY360 Waveform Synthesizer
CY480 Printer Controller
CY500 Stepper Motor Controller
CY512 Stepper Motor Controller
CY600 Data Acquisition Controller
CY750 Programmable Controller

Suffix

no suffix NMOS, Commercial
C CMOS/ML Military 883B

Example

Prefix	Device	Suffix
CY	600	C/ML

IC
Data Acquisition
CMOS
Military

CYPRESS SEMICONDUCTOR

Processing
B Hi Rel

Temperature
C Commercial (0-70°C)
M Military (−55 to +125°C)

Package
P Plastic
D Cerdip
L LCC

Example

Prefix	Device	Suffix
CY	7C 128	-45DMB

Speed Selection
Package
Temperature
Processing

DATEL

Family

ADC A/D Converters
AM Amplifiers
DAC D/A Converters
DAS Data Acquisition System
FLT Filters
MV, MX Multiplexer
SHM Sample-Hold
VF Voltage to Freq. Converters
VR Voltage Reference
VI Voltage Inverter
TT Temperature Transducer

Package — Monolithic
1 14 Pin DIP
2 TO-99

Seal — Hybrid
G Epoxy
M Hermetic

Temperature
C 0°C to 70°C
M −55°C to 125°C
R −25°C to +85°C

Example

Prefix	Device	Suffix
AM	490	2 A

Package
Selection

DAC	HZ12B	G C

Seal
Temperature

EXAR CORPORATION

XR Exar

Grade
C Commercial
M Military Ceramic package and −55°C to 125°C
( ) The absence of C or M Indicates a Commercial Part with Tighter Specs

Package
D Dice
P Plastic
N Ceramic

Example

Prefix	Device	Suffix
XR	567	CP

Grade
Package

EXEL

Exel Designator. All parts start with XL.

Temperature Range
S 0°C to +70°C
E −40°C to +85°C
A −40°C to +105°C
M −55°C to +125°C

Basic Part Number
Memory Products start with either 2 or 4.
Microperipheral Products start with 6 or 8.
'C' in the middle of the Part Number indicates a CMOS Device.

Package Type
C Cerdip
D Plastic Leaded CC
L Ceramic Leadless CC
P Plastic DIP
S Side Braze Ceramic DIP
U Unpackaged (Die)

Speed*
Usually in nanoseconds for memories. See Data Sheet.

Special Features*
See Data Sheet.

For Example:

XLS2816AP-250/E2
2Kx8 E²PROM, 0°C to +70°C, Plastic, 250 nsec, 100 cycle endurance

XLE88C681C/28L
CMOS DUART, −40°C to +85°C, Cerdip, 28 pin & low power version

Example

Prefix	Device	Suffix
XL T	NNNNN P	-SSS /FFFFF

Temperature
Package Type
Speed
Special Features

Note: Fields marked '*' are optional.

Manufacturer Device Identification	Part Number Prefix	Part Number Suffix	Example
FAIRCHILD F (Current) FAIRCHILD A Schlumberger Company (Current) FAIRCHILD (Discontinued) Note: Alternate source devices follow original manufacturer's part number and marking systems.	**F** Fairchild **SH** Hybrid **μA** Linear F (Current) (Discontinued)	**Package** **D** Ceramic DIP **E** Plastic Can **F** Flat Pack **H** Metal Can **J** Metal Power Package (TO-66) **K** Metal Power Package (TO-3) **P** Plastic DIP **R** Ceramic Mini DIP **S** Ceramic DIP (F6800 Family) **T** Mini DIP **U** Power Package (Molded, TO-220) **W** Plastic TO-92 **Temperature — Check Device Data for Specific Values** **C** 0°C to 70°C/75°C (CMOS −40°C to 85°C) **L** MOS −55°C to 85°C Hybrid −20°C to 85°C **M** −55°C to 125°C	**Prefix** **Device** **Suffix** μA 741 AHM Electrical Class (if used) Package Temperature
FUJITSU F (Current) (Discontinued)	**MB** Micro Block **MBM** Micro Block Modified and Industry Standard Numbers	**Performance Variation** **Y** **E** **H** **L** Low Power **Package** **C** Ceramic **P** Plastic **Z** Cerdip	**Prefix** **Device** **Suffix** MB 8116 E P Speed or Performance Variation Package (Ordering purposes only)
GENERAL INSTRUMENT	**Designation** **AY** Array **RA** RAM **RO** ROM **ER** Electrically Erasable Programmable ROM **SP** Speech **SPR** Speech ROM **KB** Keyboard Encoder/Interface **PIC** Microcomputer/Microprocessor **LA** Logic Array **Temperature/Screening Options** 0° to +70°C Hi-Rel MIL-STD 883, −55° to +125°C Hi-Rel, −55° to +125°C Industrial MIL-STD 883, −40° to +85°C Industrial, −40° to +85°C High Temp (Automotive) −40° to +110°C	**Packages Available** Dice **8** Lead DIP **14** Lead DIP **16** Lead DIP **18** Lead DIP **22** Lead DIP **24** Lead DIP **28** Lead DIP **40** Lead DIP **48** Lead DIP **44** Lead Plastic Chip Carrier **52** Lead Plastic Chip Carrier **68** Lead Plastic Chip Carrier **84** Lead Plastic Chip Carrier **14** Lead Ceramic **16** Lead Ceramic **18** Lead Ceramic **24** Lead Ceramic **28** Lead Ceramic **40** Lead Ceramic Chip On Board	**Prefix** **Device** **Suffix** RO-6 WXYZ (XX) Designation Temp. and Processing Description Package Identification
GOULD AMI SEMICONDUCTORS GOULD AMI Semiconductors (Current) AMI A Subsidiary of Gould Inc. (Discontinued) (Discontinued)	**Family** **S** Standard	**Package Type** **P** Plastic **D** Cerdip **C** Ceramic **L** Leadless Chip Carrier **Pins/Package** **8** Plastic **14** Plastic, Ceramic **16** Plastic, DIP and SOIC, Cerdip, Ceramic **18** Plastic, Cerdip, Ceramic **22** Plastic, Cerdip, Ceramic **24** Plastic, Cerdip, Ceramic **28** Plastic, DIP and SOIC, Cerdip, Ceramic **40** Plastic, Cerdip, Ceramic **48** Plastic, Ceramic **64** Plastic, Ceramic **20** Lead Chip Carrier **24** Lead Chip Carrier	**Prefix** **Device** **Suffix** S 68A00 P 5101L-1 C 2559A P Version Package Type

Manufacturer Device Identification	Part Number: Prefix	Part Number: Suffix	Example

GOULD AMI SEMICONDUCTORS (continued)

Suffix	
28	Lead Chip Carrier
40	Lead Chip Carrier
44	Lead Chip Carrier - Plastic, Ceramic
48	Lead Chip Carrier
68	Lead Chip Carrier - Plastic, Ceramic, Pin Grid Array
84	Lead Chip Carrier - Plastic, Ceramic, Pin Grid Array
28	Lead Plastic Mini-Flat Package
44	Lead Plastic Mini-Flat Package
68	Lead Plastic Mini-Flat Package
100	Ceramic Pin Grid Array
124	Ceramic Pin Grid Array
144	Ceramic Pin Grid Array

(Note: see pages B.19 - B.35 of AMI's 1985 MOS PRODUCTS CATALOG)

GTE MICROCIRCUITS

Microcircuits

Prefix

Description
- C Special
- G Standard
- X Dice

Package
- P Plastic
- C Ceramic
- D Cerdip
- E Leaded Chip Carrier
- L Leadless Chip Carrier

Suffix

Temperature Range
- None 0°C to +70°C
- I −40°C to +85°C
- M −55°C to +125°C (Commercial)
- B −55°C to +125°C (MIL-883, Level B)

Example

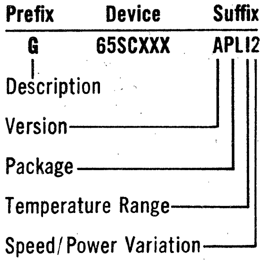
Prefix
Device
Suffix
G
65SCXXX
APLI2
Description
Version
Package
Temperature Range
Speed/Power Variation

Prefix

Description
- C Special
- G Standard

Package
- P Plastic
- C Ceramic
- D Cerdip
- E Leaded Chip Carrier
- L Leadless Chip Carrier
- X Dice

Suffix

Temperature Range
- 74 −40°C to +85°C
- 54 −55°C to +125°C

Processing
- B MIL-883, Level B

Example

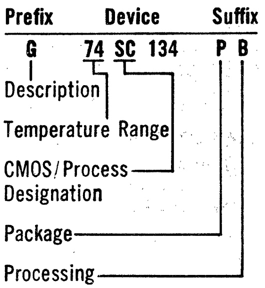
Prefix
Device
Suffix
G
74 SC 134
P B
Description
Temperature Range
CMOS/Process Designation
Package
Processing

HARRIS SEMICONDUCTOR

Prefix

Family
- A Analog
- B Board Products
- C Communications
- D Digital
- I Interface
- M Memory
- PL Programmable Logic
- S CICD
- V High Voltage
- Y Multi-Chip Components

Package
- 1 Ceramic DIP
- 1B Brazed Seal
- 2 TO-5
- 3 Epoxy DIP
- 4 Leadless Carriers
- 5 Ceramic Substrate
- 7 Mini DIP
- 9 Flat Pack
- 0 Chip Form

Suffix

Temperature
- 1 −55°C to +200°C
- 2 −55°C to +125°C
- 4 −25°C to +85°C
- 5 0°C to +70°C
- 6 100% 25°C Probe (Dice Only)
- 7 Dash 7 Program, High Reliability −5 Temp, Range
- 8 Dash 8 Program; hi-rel processing with burn-in
- 9 −40°C to +85°C
- 9+ −40°C to +85°C with 96 hour burn-in
- RH Radiation Hardened

Example

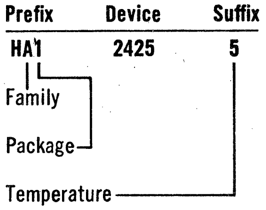
Prefix
Device
Suffix
HA1
2425
5
Family
Package
Temperature

80C86 Family Product Number

Prefix

Temperature Range
- C Commercial (0°C to +70°C)
- I Industrial (−40°C to +85°C)
- M Military (−55°C to +125°C)
- X −25°C

Suffix

SPEED

Peripherals
- 5 5 MHz
- Blank 8 MHz

CPU
- Blank 5 MHz
- 2 8 MHz

Example

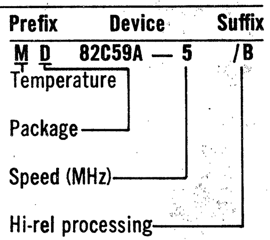
Prefix
Device
Suffix
M D
82C59A — 5
/B
Temperature
Package
Speed (MHz)
Hi-rel processing

Manufacturer Device Identification | Part Number: Prefix | Suffix | Example

HARRIS (continued)

Prefix

Package Type
- **P** Plastic
- **D** Ceramic DIP
- **X** Chip Form
- **R** Leadless Chip Carrier
- **S** Plastic Leaded Chip Carrier

Suffix

Hi-Rel Processing
- **B** Dash 8 Program; hi-rel processing with burn-in
- **+** Industrial temperature grade with 96 hour burn-in

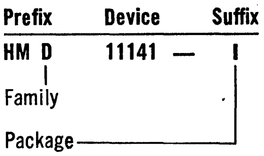
Prefix
Device
Suffix
HM D
11141
—
I
Family
Package

Harris Microwave (Gallium Arsenide) Products

Family
- **A** Amplifiers (GaAs FETs)
- **D** Digital (GaAs)
- **F** Field Effect Transistors (GaAs)
- **K** Evaluation and Test Kits
- **P** High Power FETs (GaAs)

Package
- **1** 32-Pin Hermetic Metal Flat Pack
- **2** 16-Pin Hermetic Metal Flat Pack
- **3** 48-Pin Hermetic Metal Flat Pack

HITACHI

Prefix

Type
- **HA** Analog
- **HD** Digital
- **HM** Memory (RAM)
- **HN** Memory (ROM)

Suffix

Package
- **P** Plastic DIP
- **C** Ceramic DIP
- **CP** Plastic Leaded Chip Carrier
- **FP** Flat Plastic Package
- **SO** Small Outline Package
- **PG** Pin Grid Array
- **S** Shrink Type Plastic DIP
- **CG** Glass Sealed Ceramic Leadless Chip Carrier
- **G** CERDIP

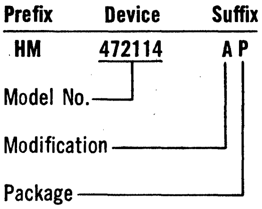
Prefix
Device
Suffix
HM
472114
A P
Model No.
Modification
Package

HONEYWELL

Prefix
- **H** Honeywell

Technology
- **E** ECL
- **T** TTL
- **M** Mixed Mode I/O
- **C** CMOS

Suffix

Temperature
- **C** Commercial
- **M** Military

Screening Level
- **B** 883B Screen
- **S** 883S Screen

Package
- **LA** 68 Pin LCC
- **LB** 84 Pin LCC
- **LC** 148 Pin LCC
- **GA** 100 Pin Grid Array
- **GB** 144 Pin Grid Aray
- **GC** 152 Pin Grid Array
- **GD** 172 Pin Grid Array
- **DA** 40 Pin CERDIP
- **DB** 64 Pin CERDIP
- **X** Dice

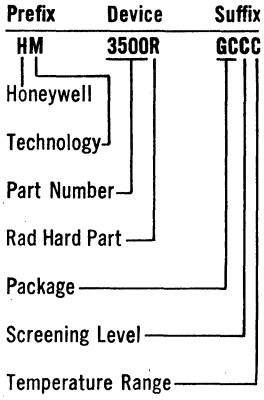
Prefix
Device
Suffix
HM
3500R
GCCC
Honeywell
Technology
Part Number
Rad Hard Part
Package
Screening Level
Temperature Range

HUGHES AIRCRAFT

HUGHES AIRCRAFT COMPANY

Prefix

Product Flow
- **HC** Commercial
- **HI** Industrial
- **HB** Class B
- **HM** Military

Suffix

Package
- **P** Plastic
- **D** Ceramic
- **H** Dice
- **L** Leadless Chip Carrier
- **Y** Cerdip
- **Q** Quad Pack
- **F** Flat Pack

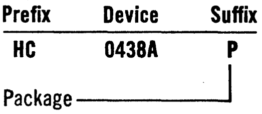
Prefix
Device
Suffix
HC
0438A
P
Package

HYBRID SYSTEMS

Hybrid Systems CORPORATION

Prefix

Family
- **ADC94** Commercial Analog to Digital Converter
- **DAC3** Digital to Analog Converter
- **DAC93** Commercial Digital to Analog Converter
- **HS5** Analog to Digital Converter
- **R6** Precision Voltage Reference
- **HS97** Sample/Hold
- **HS95** A/D Converter
- **HS93** D/A Converter

Suffix

Processing
- **C** Commercial Industrial Use
- **B** Per MIL-STD883B, Class B

Resolution
- **8** 8-Bits Binary
- **10** 10-Bits Binary
- **11** 11-Bits Binary
- **12** 12-Bits Binary
- **14** 14-Bits Binary
- **16** 16-Bits Binary
- **18** 18-Bits Binary
- **2D** 2-Decade BCD
- **3D** 3-Decade BCD
- **4D** 4-Decade BCD

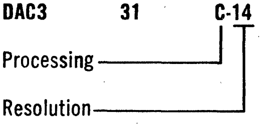
Prefix
Device
Suffix
DAC3
31
C-14
Processing
Resolution

ILC DATA DEVICE

DDC ILC DATA DEVICE CORPORATION

Prefix

Family
- **ADC** Analog to Digital
- **ADH** Analog to Digital (Hybrid)
- **BUS** Data Bus Device
- **DAC** Digital to Analog
- **DDAC** Deglitched, Digital to Analog
- **DRC** Digital to Resolver
- **DSC** Digital to Synchro

Suffix

Converter Resolution
- **-6** 6-Bits
- **-8** 8-Bits
- **-10** 10-Bits
- **-11** 11-Bits
- **-12** 12-Bits
- **-14** 14-Bits
- **-16** 16-Bits

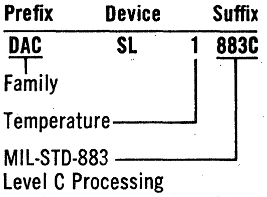
Prefix
Device
Suffix
DAC
SL
1
883C
Family
Temperature
MIL-STD-883
Level C Processing

Manufacturer Device Identification | Part Number: Prefix | Suffix | Example

ILC DATA DEVICE (continued)

Prefix

HDSC Hybrid Digital to Synchro or Resolver
HDP Hybrid Data Processor
HMSDC Hybrid Multiplexed Synchro to Digital
HSCT Hybrid Solid State Control Transformer
HSDC Hybrid Synchro to Digital
IDC Inductosyn to Digital
MSDC Multiplexed Synchro to Digital
RDC Resolver to Digital
SBA Synchro Booster Amplifier
SDC Synchro to Digital
SH Sample and Hold
TD Torque Driver
TH Track and Hold

Suffix

Temperature Ranges
-1 Extended Temperature Range
-3 0°C to +70°C

Voltage Range (Synchro Converters Only)
-H 90V at 400 Hz
-M 26V at 400 Hz
-L 11.8V at 400 Hz
-6 90V at 60 Hz

INMOS

inmos®

Type
1 Static RAM
2 Dynamic RAM
3 EEPROM

Size (2^n) K
4 = 16K
5 = 32K
6 = 64K
etc. . . .

Organization (2^n) Bits
0 = x1
1 = x2
2 = x4
etc. . . .

Version
0 Standard
I High Speed

Package
S Ceramic DIP
W Ceramic Chip Carrier
P Plastic DIP

Speed
45 — 45ns Access Time
55 — 55ns Access Time
12 — 120ns Access Time
etc. . . .

Screening
(Blank) Commercial
M MIL-883B
E Extended Temperature

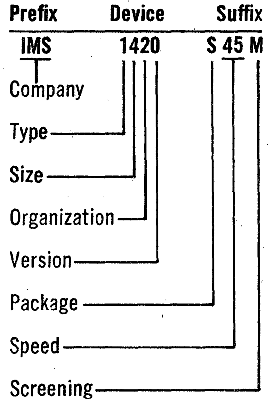

INTEGRATED POWER SEMICONDUCTORS

INTEGRATED POWER SEMICONDUCTORS, LTD.
IPS

Family
A Amplifier
D DC/DC Converter
H Hybrid
L Linear Regulator
M Motor Control
P Power Driver
S SMPS Controller
T Transducer Interface

Temperature
1 (Military Range) −55°C to +125°C
2 (Industrial Range) −25°C to +85°C
3 (Commercial Range) 0°C to +70°C

Package
D Ceramic
H TO-5, 99, etc. Can
J Cerdip
K TO-3
N Plastic Dip
T TO-220

Performance
A Enhanced
B Enhanced

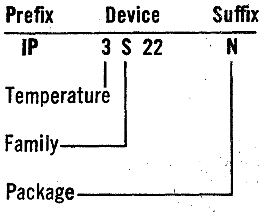

INTEL

intel® i

Description
M Indicates Military Operating Temperature Range
I Indicates Industrial Grade
J Indicates a JAN qualified device, but is for internal identification purposes only. All JAN devices must be ordered by M38510 part number (Example: M38510/42001 BQB), and will be marked in accordance with MIL-M-38510 specifications.

Package Type
B Hermetic Package, Type B
C Hermetic Package, Type C
D Hermetic Package, Type D
G Hermetic Package, Pin Grid Array
I Crystal Package
M Metal Can Package
P Plastic Package
R Hermetic Package, Leadless Chip Carrier
X Unpackaged Device

Examples:
D2147H1 High Speed 4096x1-Bit Static Ram (35ns, 180/30mA)
C8080A2 8080A Microprocessor with 1.5 s cycle time, hermetic package Type C, commercial temperature range
MD8080A/B 8080A Microprocessor, hermetic package Type D, military temperature range. MIL-STD-883 Level B processing*

* On military devices, B suffix indicates MIL-STD-883 Level B processing.

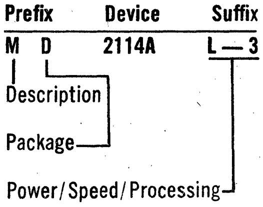

Manufacturer Device Identification | **Part Number: Prefix** | **Part Number: Suffix** | **Example**

INTERNATIONAL MICROCIRCUITS

Circuit Technology
- **4** Metal Gate CMOS, Single Metal
- **7** Silicon Gate CMOS, Single Metal
- **9** Silicon Gate CMOS, Double Metal
- **6** Silicon Gate CMOS, Double Metal

Revision Level — Serialized
- **A** First Design

Customer and Job Code — Serialized
- **00** Unassigned

Package Type
- **P** Plastic
- **Q** Cerdip
- **R** Chip Carrier
- **S** Special
- **T** No Package (Die)
- **U** Side Brazed
- **X** Prototype Part

Temperature Range
- **V** Special
- **W** 0°C to +70°C
- **X** Prototype Part
- **Y** −25°C to +85°C
- **Z** −55°C to +125°C

Assurance, Testing
- **K** Full Functional Test at 25°C
- **L** Special Test/Screen
- **M** MIL-STD-883B, 5004
- **X** Prototype

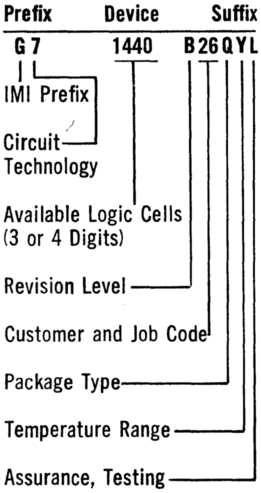
Prefix **Device** **Suffix**

G 7 **1440** **B 26 Q Y L**

IMI Prefix
Circuit Technology
Available Logic Cells (3 or 4 Digits)
Revision Level
Customer and Job Code
Package Type
Temperature Range
Assurance, Testing

INTERSIL

INTERSIL

(Current)

INTERSIL

(Discontinued)

i

(Discontinued except for very small parts)

Prefix
- **AD** Analog Devices Alternate Source
- **D** Lriver/Level Translator IC
- **DG** Siliconix Analog Switch Alternate Source
- **DGM** Monolithic DG Analog Switch Replacement
- **ICL** Linear IC
- **ICM** Microperipheral IC
- **ICH** Hybrid IC
- **IM** Microcontroller IC
- **LH** National Semiconductor Hybrid Alternate Source
- **LM** National Semiconductor Alternate Source
- **MM** High Voltage Analog Switch
- **NE** Signetics Alternate Source
- **SE** Signetics Alternate Source

Package
- **A** TO-237
- **B** SOIC
- **C** TO-220
- **D** Ceramic dual-in-line
- **E** Small TO-8
- **F** Ceramic flat-pack
- **H** TO-66
- **I** 16 pin (.6 x .7 pin spacing) hermetic hybrid dip
- **J** Cerdip dual-in-line
- **K** TO-3
- **L** Leadless, ceramic
- **P** Plastic dual-in-line
- **S** TO-52
- **T** TO-5 type (also TO-78, TO-99, TO-100)
- **U** TO-72 type (also TO-18, TO-71)
- **V** TO-39
- **Z** TO-92
- **/W** Wafer
- **/D** Dice

Temperature Range
- **C** Commercial: 0°C to 70°C
- **I** Industrial: Either −25°C to 85°C or −40°C to 85°C (Specified on Datasheet)
- **M** Military: −55°C to +125°C

Number of Pins
- **A** 8
- **B** 10
- **C** 12
- **D** 14
- **E** 16
- **F** 22
- **G** 24
- **H** 42
- **I** 28
- **J** 32
- **K** 35
- **L** 40
- **M** 48
- **N** 18
- **P** 20
- **Q** 2
- **R** 3
- **S** 4
- **T** 6
- **U** 7
- **V** 8 (0.230″ pin circle, isolated case)
- **W** 10 (0.230″ pin circle, isolated case)
- **Y** 8 (0.200″ pin circle, case to pin 4)
- **Z** 10 (0.230″ pin circle, case to pin 5)

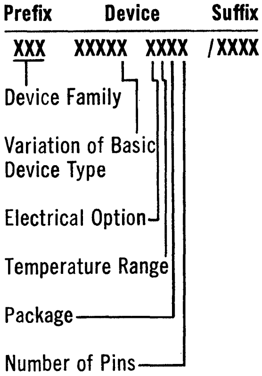
Prefix **Device** **Suffix**

XXX **XXXXX** **XXXX** **/XXXX**

Device Family
Variation of Basic Device Type
Electrical Option
Temperature Range
Package
Number of Pins

Manufacturer Device Identification	Part Number Prefix	Part Number Suffix	Example

INTERSIL (continued)

High Reliability Designator

- **/883B** MIL-STD-883B Screened Device
- **/HR** High-Reliability Device
- **/BR** Cost-Effective High-Reliability Device
- **/BI** Burn-in Only Process Flow

JAN NOMENCLATURE

Prefix

- **J**
- **JAN** Qualified Device
- **M38510** Military Designation

Device

The "Slash" numbering signifies the specification and specifies the device type. See Military Parts Directory. **Note:** The J or JAN prefix is very important. If it is not there it is not a JAN device.

Device Class

- **A** Missiles and manned Spacecraft
- **B** General Military
- **C** Less Critical Military Applications

Case Outline

- **A** ¼" x ¼" Flat Pack, 14-Pin
- **B** ⅛" x ¼" Flat Pack, 14-Pin
- **C** ¼" x ¾" Dual-In-Line, 14-Pin
- **D** ¼" x ⅜" Flat Pack, 14-Pin
- **E** ¼" x ¾" Dual-In-Line, 16-Pin
- **F** ¼" x ⅜" Flat Pack, 16-Pin
- **G** 8-Lead Can
- **H** ¼" x ¼" Flat Pack, 10-Lead
- **I** 10-Lead Can
- **J** ½" x 1¼" Dual-In-Line, 24-Pin
- **K** ⅜" x ½" Flat Pack, 24-Pin
- **L** ⅜" x ½" Flat Pack, 24-Pin
- **Z** ¼" x ⅜" Flat Pack, 24-Pin

Lead Finish

- **A** Kovar or Alloy 42, with Hot Solder Dip
- **B** Kovar or Alloy 42, with Bright Acid Tin Plate
- **C** Kovar or Alloy 42, with Gold Plate

Example

Prefix	Device	Suffix
JM38510	/XXXXX	B C B

Device Class — B
Case Outline — C
Lead Finish — B

LAMBDA

- **L** Overvoltage regulator
- **LAS** Regulator
- **PMD** Discrete Transistor
- **PMR** Dual Rectifier
- **PMS** Switching Transistor

Example

Prefix	Device	Suffix
LAS	14	12

Voltage — 12

LATTICE

LATTICE

Power

- **Blank** Standard
- **L** Low
- **Q** ¼ Power

Package

- **C** Sidebrazed
- **D** Cerdip
- **P** Plastic
- **R** Leadless Chip Carrier
- **J** PLCC (J Lead)

Temperature

- **Blank** 0°C to +70°C (75°C for GAL)
- **M** −55°C to +125°C
- **I** −25°C to +85°C

Burn-In

- **Blank** No Burn-in
- **B** Burned In

Mil Process

- **Blank** No Mil Process
- **1883C** 883C Process

Example

Prefix	Device	Suffix
GAL	16V8	XX X X X X/883C

Speed — XX
Power — X
Package — X
Temperature — X
Burn-In — X
MIL Process — /883C

Manufacturer Device Identification	Part Number		Example
	Prefix	Suffix	
LINEAR TECHNOLOGY CORPORATION	**Description** **LT**..Linear Technology **LF, LH, LM** Alternate Source to NSC **OP** Alternate Source to PMI **SG** Alternate Source to Silicon General **UC** Alternate Source to Unitrode **Temperature** **C** Commercial Range 0°C to 70°C **M** Military Range −55°C to +125°C	**Package** **H** TO-5, TO-46 can **J8** 8 lead Cerdip **J** 14, 16, 18 lead Cerdip **K** TO-3 (Steel) **N8** 8 lead molded dip **N** 14, 16, 18 lead molded dip **S8** 8 lead SOIC **T** 3, 5 lead molded TO-220 **Z** 2, 3 lead molded TO-92	Prefix Device Suffix LT 1001A C H Temperature Range Package Type
MASTER LOGIC ML (Most ICs are marked with ML prefix as well as purchaser's marks)	**Family** **ML** CMOS Gate Array **MLA** CMOS Custom **F** Other **Gate Capacity** **50** 50 Gates **75** 75 Gates **100** 100 Gates **150** 150 Gates **200** 200 Gates **350** 350 Gates	**Package** **P** Plastic **CD** CerDIP **SB** Side Brazed **Pins** By Count	Prefix Device Suffix ML 150 P-24 Family Gate Capacity Package Pins
MICRO NETWORKS	**MN** Micro Networks	**Package Designator (if applicable)** **FP** Flat Pack **CD** Ceramic DIP **PD** Plastic DIP **TC** TO-can **CL** Ceramic Leadless **LC** Leadless Chip Carrier **LP** Plastic Lealdess Carrier **Temperature Range** — 0°C to +70°C **E** −25°C to +85°C **F** −55°C to +85°C **G** −55°C to +100°C **H** −55°C to +125°C **Processing and Screening** — Micro Networks "Commercial Plus" processing and screening **B** 100% screening to MIL-STD-883 Method 5008	Prefix Device Suffix MN 5250 A CL H B Model Rev Letter Package Temperature Range Processing
MICRO POWER SYSTEMS	**MP** Micro Power	**Temperature Range** **J, K, L** Commercial/Industrial **S, T, U** Military **Package** **D** Ceramic DIP **N** Plastic DIP **H** TO-100 Type Can	Prefix Device Suffix MP 7520 T D XXXX Level of Performance Package Special Processing
MITEL SEMICONDUCTOR	**Family** **MD** Digital **MRXXHCT** Digital Product Family High Speed ISO-CMOS **MH** Hybrid **ML** Linear **MT** Telecommunications	**Package** **C** Ceramic Dual-in-Line (Cerdip) **D** Ceramic Dual-in-Line (Side-Braze) **E** Plastic Dual-in-Line **H** Die in Tray Pack **K** Ceramic Leaded Quad Pack **P** Plastic Leaded Quad Pack **W** Die in Probed Wafer Form **Y** Ceramic Leadless Chip Carrier	Prefix Device Suffix MT 8804 A E Electrical Specification Package Type

Manufacturer Device Identification	Part Number Prefix	Part Number Suffix	Example

MITSUBISHI

Prefix

M Mitsubishi Integrated Circuit

Temperature Range
- **5** Industrial/Commercial
- **9** High Reliability

Series (Original Products)
- **01-09** CMOS
- **1** Linear Circuit
- **3** TTL
- **10-19** Linear Circuit
- **32-33** TTL
- **41-47** TTL
- **84** CMOS
- **85, 86** PMOS
- **87** NMOS
- **88** PMOS
- **89** CMOS
- **9** DTL
- **S0-S2** Schottky TTL

Series (Alternate Source)
- **K** Mostek MK Series
- **L** Intel Series
- **T** TI TMS Series
- **G** General Instrument
- **C** Motorola MC Series
- **W** Western Digital Series

Suffix

Package Style
- **K** Glass-Sealed Ceramic
- **P** Molded Plastic
- **S** Metal-Sealed Ceramic
- **SP** Molded Plastic (Shrink DIL)
- **FP** Molded Plastic (Flat)

Package Outline
- **1** DIL Without Fin
- **2** Flat Without Fin
- **4** DIL Without Fin (Improved)
- **4B** Shrink DIL Without Fin
- **10** DIL Without Fin and With Quartz Lid

Example

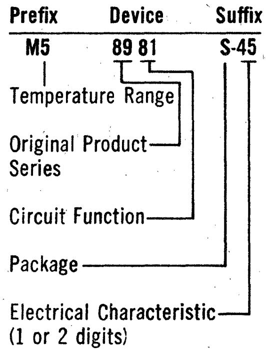
Prefix
Device
Suffix
M5
89 81
S-45
Temperature Range
Original Product Series
Circuit Function
Package
Electrical Characteristic (1 or 2 digits)

Second Source

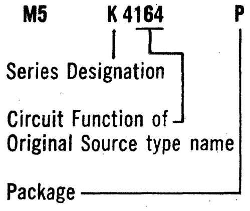
M5
K 4164
P
Series Designation
Circuit Function of Original Source type name
Package

MONOLITHIC MEMORIES

Prefix

PAL/HAL — Family
- **PAL** Programmable Array Logic
- **HAL** Hard Array Logic

Output Type
- **H** Active High
- **L** Active Low
- **C** Complementry
- **R** Registered
- **X** Exclusive or Registered
- **A** Arithmetic Registered

Temperature Range
- **C** Commercial
- **M** Military

Suffix

Package Type
- **J** Ceramic Dual-In-Line
- **N** Plastic Dual-In-Line

Screening Level
- **883B** MIL-STD-883, Method 5004 and 5005, Level B
- **883C** MIL-STD-883, Method 5004 and Level C

Example

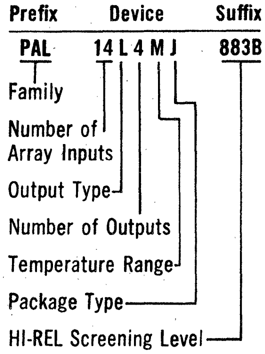
Prefix
Device
Suffix
PAL
14 L 4 M J
883B
Family
Number of Array Inputs
Output Type
Number of Outputs
Temperature Range
Package Type
HI-REL Screening Level

Prefix

Interface

Temperature Range
- **74** Commercial
- **54** Military

Family
- **S** Schottky
- LS Low Power Schottky

Suffix

Package Type
- **J** Ceramic Dual-In-Line (600 Mil Wide)
- **JS** Ceramic Dual-In-Line (300 Mil Wide)
- **N** Plastic Dual-In-Line (600 Mil Wide)
- **NS** Plastic Dual-In-Line (300 Mil Wide)
- **D** Side Brazed Ceramic Dual-In-Line
- **F** Flat Pack
- **L** Leadless
- **T** Inverted "D" Package

Example

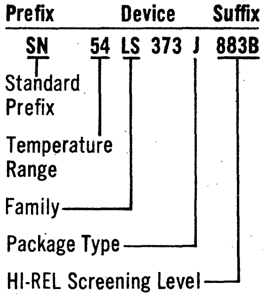
Prefix
Device
Suffix
SN
54 LS 373 J
883B
Standard Prefix
Temperature Range
Family
Package Type
HI-REL Screening Level

Prefix

FIFOs

Arithmetic

Temperature Range
- **67** Commercial
- **57** Military
- **C** CMOS

Suffix

Package Type
- **J** Ceramic-In-Line
- **N** Plastic Dual-In-Line

Example

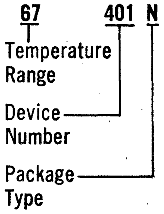
67
401
N
Temperature Range
Device Number
Package Type

Prefix

ECL

All ECL Products are for commercial temperature range only

Family 10KH 10KH Technology

Suffix

J Ceramic

Example

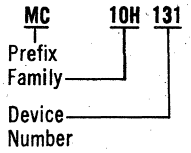
MC
10H
131
Prefix
Family
Device Number

Manufacturer Device Identification | **Part Number: Prefix** | **Part Number: Suffix** | **Example**

MONOLITHIC MEMORIES (continued)

PROMs-ROMs Character Generator-Logic

Temperature Range
- **6** Commercial
- **5** Military

Product
- **0** Character Generator O.C.
- **1** Character Geerator T.S.
- **2** Read Only Memory (ROM)
- **3** Programmable Read Only Memory (PROM)
- **7** LSI Logic Product

Screening Level
See previous page

Family
- **-1** Schottky Process (PROMs)
- **-2** Improved Performance Over -1

Package Type
See Interface

Screening Level
See previous page

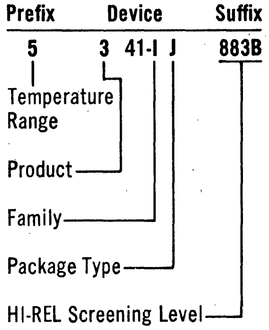
Prefix
Device
Suffix
5
3 41-1 J
883B
Temperature Range
Product
Family
Package Type
HI-REL Screening Level

High Performance PROMs

Temperature Range
- **6** Commercial
- **5** Military

Product
- **3** Programable Read Only Memory (PROM)

Family
- **S** Schottky
- **LS** Low Power Schottky
- **RA** Registered
- **DA** Diagnostic

Memory Size
- **0** 256 Bit
- **1** 1024 Bit
- **2** 2048 Bit
- **4** 4906 Bit
- **8** 8192 Bit
- **16** 16384 Bit
- **32** 32768 Bit

No. of Outputs
- **4** 4 Bit
- **8** 8 Bit

Output/Pin Out Designator
- 0 Open Collector
- **1** Three State
- **3** Two State

Performance
- **None** Standard
- **A** Enhanced

Package Type
See Interface

Screening Level
See previous page

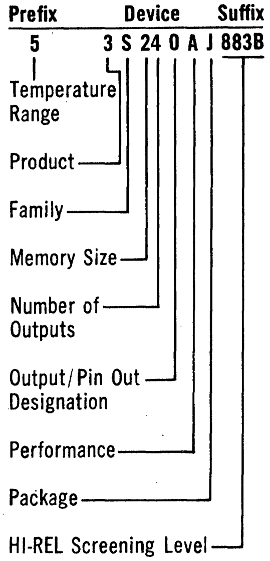
Prefix
Device
Suffix
5
3 S 24 0 A J 883B
Temperature Range
Product
Family
Memory Size
Number of Outputs
Output/Pin Out Designation
Performance
Package
HI-REL Screening Level

MOSTEK

UNITED TECHNOLOGIES MOSTEK

Prefix: **MK** Mostek

Package
- **E** Ceramic Leadless Chip Carrier
- **J** CER-DIP
- **K** Tin Side-Brazed Ceramic DIP
- **N** Epoxy DIP (Plastic)
- **P** Gold Side-Brazed Ceramic DIP
- **T** Ceramic DIP with Transparent Lid

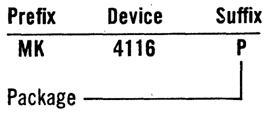
Prefix
Device
Suffix
MK
4116
P
Package

MOTOROLA

(ICs may not have the circle on the marking)

Some second source ICs follow the original marking system.

Description
- **MC** Packaged Integrated Circuits
- **MCC** Unencapsulated Integrated Circuit Chips
- **MCCF** Flip-Chip Linear Integrated Circuits
- **MCM** Integrated Circuit Memories
- **LM** Pin-for-Pin Equivalent to Linear Integrated Circuits Made by National Semiconductor
- **MMS** Memory Systems

Package
- **F** Flat Ceramic Package
- **G** Metal Can Package (TO-5 Types)
- **K** Metal Power Package (TO-3 Types)
- **L** Ceramic Dual-In-Line Case
- **P** Plastic Package
- **PQ** ICs Packaged In Staggered-Lead Plastic DIP Packages
- **R** Metal Power Packages (TO-66 Types)
- **T** Plastic Package (TO-220 Type)
- **U** Ceramic Package

SOIC package (small outline IC package),

Package
Dual-In-Line plastic in 8, 14 and 16 leads
SOT package (small outline, transistor package), such as SOT 23, etc.
Leadless Ceramic Chip Carriers
Leaded Plastic Chip Carriers
Now: A ceramic package with a lead count, up to 68 leads of more for direct socketing with boards

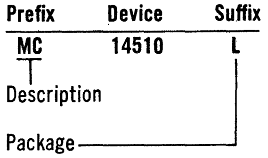
Prefix
Device
Suffix
MC
14510
L
Description
Package

Manufacturer Device Identification	Part Number Prefix	Part Number Suffix	Example

NATIONAL SEMICONDUCTOR

National Semiconductor Corporation

Family	
ADC	Analog-Digital Converter
ADS	Data Acquisition
AEE	Microcomputer Product
AF	Active Filter
AH	Analog Switch (Hybrid)
ALS	Advanced Low Power Schottky
AM	Analog Switch (Monolithic)
BLC	Board Level Computer
BLMX	Board Level Multi-Tasking Executive
BLX	Board Level Expansion
C	CMOS
CD	CMOS (4000-Series Only)
CIM	CMOS Microcomputer Board
COP	Family of Microcontrollers
DA-AD	Digital to Analog — Analog to Digital
DAC	Digital to Analog Converter
DB	Development Board
DH	Digital (Hybrid)
DL	Alpha Numeric Integrated Display
DM	Digital (Monolithic)
DP	Interface (Microprocessor)
DS	Interface
DT	Digitalker
DTSW	Digitalker Software
ECL	Emitter Coupled Logic
FOE	Fiber Optics Emitter
FOR	Fiber Optics Receiver
FOT	Fiber Optics Transmitter
HC	High Speed CMOS
HCT	High Speed CMOS (TTL)
HPC	High Performance Microcontrollers
HS	Hybrid
ICM	Integrated Computer Module
IDM	Microprocessor (2901)
IMP	Microprocessor (IMP)
INS	Microprocessor (4004/8080A)
IPC	Microprocessor (PACE)
ISE	In-System Emulator
ISP	Microprocessor (SC/MP)
JM	MIL-M38510
LED	LED
LF	Linear (BI-FET)
LF	Linear (BI-FET II)
LH	Linear (Hybrid)
LM	Linear (Monolithic)
LMC	Linear Monolithic CMOS
LP	Linear Low Power
MA	Module Macrocomponents
MAN	LED Display
MCA	Gate Array
MF	Monolithic Filter
MH	MOS (Hybrid)
MM	MOS (Monolithic)
MMBF	FET SOT-23
MMBFJ	FET SOT-23
MMBT	Bipolar Transistor SOT-23
MMBTA	Bipolar Transistor SOT-23
MMBTH	Bipolar Transistor SOT-23
MV	LED Lamp
NH	Hybrid (Obsolete)
NMC	MOS Memory
NMH	National Memory Hybrid
NPDS	Surface Mount Dual JFETS
NS	Microprocessor Component (Memory Systems)
NS	Microprocessor Component (Microprocessors, 32000)

Prefix	Device		Suffix
LF	356	N	/A+

Device Family

Device Number (Generic Type) and Suffix Letter (Optional)
A: Improved Electrical Specification
C: Commercial Temperature Range (2nd Source Products)

Package Type

Reliability Program (Optional)

Manufacturer Device Identification	Part Number Prefix		Part Number Suffix	Example
NATIONAL SEMICONDUCTOR (continued)	**NSA**	LED — Numeric Arrays		
	NSB	LED Numerics (Quad/Quint)		
	NSC	LED — Dice (or Chip)		
	NSC	Microprocessor (800)		
	NSL	LED — Lamp		
	NSL	Opto		
	NSM	LED — Integrated Display Modules		
	NSN	LED — Numerics (Dual)		
	NSW	LED — Watch Die Set PNP, NPN, 2N		
	PAL	Programmable Array Logic		
	PL	Programmable Logic		
	PN	Bipolar Plastic Transistor		
	PNP	Discrete		
	PROCESS	Transistor Die		
	RA	Resistor Array		
	RETS	Reliability Electrical Test Specifications		
	RMC	Rack Mount Computer		
	SC/MP	Storage Computer/ Microprocessor		
	SCX	Gate Array		
	SD	Special Digital		
	SF	Special FET		
	SFW	Software		
	SH	Special Hybrid		
	SK	Special Kit		
	SL	Special Linear		
	SM	Special MOS		
	SN	Digital (2nd Source)		
	SPM	Development Systems		
	SPX	Development Systems		
	TBA	Linear (2nd Source)		
	TDA	Linear		
	TP	Telecom Products		
	TRC	Tone Receiver Card		
	U	FET		
	μP	Microprocessor		

Temperature Ranges
Linear Devices
With proprietary linear circuits, a 1-2-3 numbering system is employed.
The 1 denotes a Military temperature range device (−55°C to 125°C), the 2 denotes an Industrial device (−25°C to 85°C), and the 3 denotes a Commercial device (0°C to 70°C). i.e. LM101/LM201/LM301. Exception to this are the LM1800 Series; some hybrid circuits which employ a "C" Suffix; and second-source products which follow the original manufacturer's numbering system.

Digital Devices
CDXXXX-CMOS—
C Suffix −40°C to 85°C,
M Suffix −55°C to 125°C.

DM54XX — All numbers beginning with 5 denote −55°C to 125°C temperature operation.

DM74XX — If the "74" is indicated, the operating temperature is 0°C to 70°C.

DM7XXX — All other numbers beginning with 7 (besides the "74" shown above) are NSC proprietary products and a 7 here indicates −55°C to 125°C.

DM8XXX — All numbers beginning with 8 denote 0°C to 70°C temperature operation.

Converter Products
Resolution

08	8 Bits
10	10 Bits
12	12 Bits
25	2½ Digit
35	3½ Digit
37	3¾ Digit
45	4½ Digit

Form

C	Complete
B	Building Block
D	Digital Panel Meter Chip
M	Module
S	Card Systems

Technology

P	PMOS
C	CMOS
H	Hybrid
B	Bipolar
N	NMOS
L	Linear
I	I^2L
	Micro CMOS

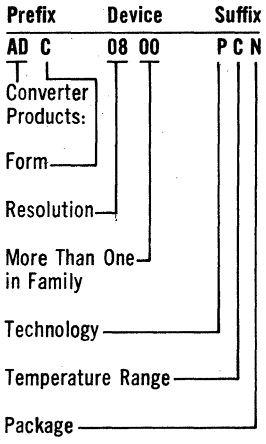

PART NUMBER GUIDE

Manufacturer Device Identification	Part Number: Prefix	Part Number: Suffix	Example

NCM CORPORATION

ncm corporation

Temperature

Code	Meaning
C	Commercial
M	Military

Package

Code	Meaning
D	Ceramic DIP
F	Ceramic Flatpack
L	Leadless Carrier
N	Plastic DIP

Digits 1, 2

Code	Meaning
20	Metal Gate, Full Custom
30	Metal Gate, Semi Custom
40	Si-gate, Full Custom
50	Bipolar Array
60	Analog, Custom
70	Si-gate, Semi Custom

Digits 3, 4

Device No.
Device No.
Device No.
Device No.
Device No.

Example

Prefix	Device	Suffix
NCM	40 02	Z N

Technology
Device Number
Revision
Package

NEC ELECTRONICS INC.

NEC Electronics Inc.

Product Family

Code	Meaning
μPB	Bipolar Products
μPC	Linear Products
μPD	MOS Products

Package

Code	Meaning
B	Ceramic Flat Pack
C	Plastic DIP
D	Ceramic DIP
E	Ceramic Piggyback DIP
L	Plastic Leadless Chip Carrier
G	Plastic Miniflat
G2	Plastic Molded SO
K	Ceramic Leadless Chip Carrier

Example

Prefix	Suffix	Device
μPD	7220A	D

Family
Device
Package

OPTICAL ELECTRONICS

Description

Code	Meaning
2000	Log/Anti-Log
3000	V/F - F/V Phase Detector
5000	Non-Linear Functions
6000	3-D System Card
9000	Op Amps, Comparators, Current Booster, etc.

PANASONIC (MATSUSHITA)

MATSUSHITA

Description

Code	Meaning
AN	Analog
DN	Digital Bipolar
M,J	Development Type
MN	MOS

Example

Prefix	Device
DN	74LS00

PLESSEY

PLESSEY

(All ICs are marked **PLESSEY**)

Description

Code	Meaning
MJ	N-Channel MOS
ML	MOS Linear w/Gate Protection
MN	MNOS Digital
MP	MOS Digital
MT	MOS Linear (without Gate Protection)
MV	CMOS
NJ	N-Channel MOS
NOM	MNOS Memory Elements and Arrays
TAA, TBA, TCA, TDA	Alternate Sourced Consumer Devices
SL	Bipolar Linear
SP	Bipolar Digital

Package

Code	Meaning
CM	Multilead TO-5
DC	Dilmon
DG	Ceramic Dual-In-Line
DP	Plastic Dual-In-Line
EP	Power Stud
FM	Ten Lead Flatpack
GC	Leadless Carrier
GM	Fourteen Lead Flatpack
KM	TO-3
QG	Ceramic Quad-In-Line
QP	Plastic Quad-In-Line
RP	Power Findip
SP	Plastic Single-In-Line

Example

Prefix	Device	Suffix
SP	8735B	DG

Description
Package

PRECISION MONOLITHICS

PMI®

Description

Code	Meaning
AMP	Instrumentation Amplifier
BUF	Buffer (Voltage Follower)
CMP	Comparator
DAC	Digital-to-Analog Converter
DMX	De-Multiplexer
GAP	General Purpose Analog Processor
JAN	Mil-M-38510 Slash Sheet
MAT	Matched Transistors
MUX	Multiplexer
OP	Operational Amplifier
PKD	Peak Detector
PM	PMI Second Source Product
REF	Voltage Reference
RPT	PCM Line Repeater
SMP	Sample/Hold Amplifier
SW	Analog Switch

Package

Code	Meaning
H	6 lead TO-78
J	8 lead TO-99
K	10 lead TO-100
P	Epoxy B DIP
Q	16 lead Ceramic DIP
R	20 lead Ceramic DIP
T	28 lead Ceramic DIP
V	24 lead Ceramic DIP
X	18 lead Ceramic DIP
Y	14 lead Ceramic DIP
Z	8 lead Ceramic DIP

Example

Prefix	Device	Suffix
DAC	08	BI E Q/883

Burn-In Option
Electrical Grade
Package
MIL-STD-883 Class B

Manufacturer Device Identification | Part Number: Prefix | Suffix | Example

PRO ELECTRON

Prefix

First Two Letters

Digital

FA - FZ	
GA - GZ	Identify the Family
etc.	

Solitary Circuits

S	Solitary Digital Circuit
T	Analog Circuit
U	Mixed Analog/Digital

(The second letter has no special significance, except H means Hybrid.)

Third Letter

Temperature Range

A	Temp. Range not specified below
B	0°C to +70°C
C	−55°C to +125°C
D	−25°C to +70°C
E	−25°C to +85°C
F	−40°C to +85°C
G	−55°C to +85°C

If a circuit is designed for a wider temperature range, the letter indicating a narrower temperature range or the letter "A" can be used.

Device or Serial Number

Either a 4-digit number assigned by PRO ELECTRON or the serial number (even a combination of figures and letters) of an existing type designation which can be extended to a minimum of a 4-digit number by adding zeros in front of it.

Suffix

Suffix or Version Letter (Recommended)

Single Letter

C	Cylindrical	**Q**	Quad-In-Line
P	Plastic DIL	**F**	Flat Pack
D	Ceramic DIL	**U**	(Uncased) Chip

Other letters have no fixed meaning except Z means customized wiring.

Two Letters

First Letter: General Shape

C	Cylindrical
D	Dual-In-Line (DIL)
E	Power DIL (with External Heat Sink)
F	Flat (Leads on 2 Sides)
G	Flat (Leads on 4 Sides)
K	Diamond (TO-3 Family)
M	Multiple-In-Line (Except Dual-, Triple-, Quad-In-Line)
Q	Quad-In-Line (QUIL)
R	Power QUIL (with External Heat Sink)
S	Single-In-Line (as TO-127 or TO-220)
T	Triple-In-Line

Second Letter: Material

C	Metal-Ceramic
G	Glass-Ceramic (cerDIP)
M	Metal
P	Plastic

Example

Prefix	Device	Suffix
GFB	7400	-DP
GMB	74LS00A	-DC
SAC	2000	
TDA	1000	P

RAYTHEON SEMICONDUCTOR

Raytheon

Prefix

Temperature

LH1, LM1	−55°C to 125°C
LM2	−25°C to 85°C
LM3	0°C to 70°C
RC	0°C to 70°C
RM	−55°C to 125°C
RV	−40°C to 85°C

HA Series

HA1	14-Pin Ceramic DIP
HA3	14-Pin Plastic DIP
XR	All Temps

Microcomputer Components

R

Beam Lead Chips

RC	0 to +70°C, C-level (commercial) visual
RM	−55 to +125°C, B-level (military) visual
NRF	Ray I, II, III TTL device
RG	−55 to +125°C
RL	B-level visual
54LS	Low-Power Schottky TTL, −55 to +125°C, B-level visual

Suffix

Package

Most Devices

BM	16-Pin Epoxy-B DIP
CH	Chip, Visually Inspected to MIL-STD-883B, Method 2010, and Packaged in Waffle Pack
CJ	14-Pin Ceramic Flatpak
CL	16-Pin Ceramic Flatpak
CK	14-Pin Ceramic Flatpak
CQ	10-Pin Ceramic Flatpak
DC	14-Pin Ceramic DIP
DD	16-Pin Ceramic DIP
DE	8-Pin Ceramic DIP
DM	16-Pin Ceramic DIP
DZ	40-Pin Ceramic DIP
F	Flatpak
FD	64-Lead Ceramic Flatpak, Side Brazed
FV	28-Pin Ceramic Flatpak
FZ	42-Pin Ceramic Flatpak
H	3, 8 or 10-Pin Metal Can
K	TO-3 Power Pack
M	8 or 14-Pin Plastic Micro-Pak
LS	20-Lead Chip Carrier (Square)
LV	28-Lead Chip Carrier (Rectangular)
LW	28-Lead Chip Carrier (Square)
MB	16-Pin Epoxy-B DIP
ML	16-Pin Ceramic DIP, Side Brazed
MS	20-Pin Ceramic DIP, Side Brazed
MZ	40-Pin Ceramic DIP, Side Brazed
N	24-Pin Flatpak
N	Epoxy-B DIP (LM Series)
NB	8-Pin Epoxy-B DIP
PS	20-Pin Epoxy-B DIP
PU	24-Pin Epoxy-B DIP
PV	28-Pin Epoxy-B DIP
PZ	40-Pin Epoxy-B DIP
R	24-Pin Ceramic DIP
S	Ceramic "Slim-DIP"
T	3, 8, 10 or 12-Pin Metal Can
TK	9-Pin TO-66 Power Pack

Example

Prefix	Device	Suffix
RC	4136	DB
LM		H
HA1	4741	5
XR	2207	CN

Prefix	Device	Suffix
RC	4151	DE / 883B

Temperature

RC 0 to 70°C

RM −55 to 125°C

RV −40 to 85°C

Package

Processing to MIL-STD-883B

Prefix	Device	Suffix
LM	139	J / 883B

Package

Processing to MIL-STD-883B

Prefix	Device	Suffix
DAC	10 B D	M / 883B

Electrical Grade

Package

Temperature

C 0 to 70°C

M −55 to 125°C

Processing to MIL-STD-883B

Manufacturer Device Identification	Part Number Prefix	Part Number Suffix	Example

RAYTHEON SEMICONDUCTOR (continued)

Raytheon ICs are identified by an **RAY** prefix to the date code.

Package
Beam Lead Chips
- **BL**

HA Series
- **2** −55°C to +125°C
- **5** 0°C to +70°C
- **8** −55°C to +125°C

XR Series
- **M** Ceramic −55°C to +125°C
- **N** Ceramic −40°C to +85°C
- **P** Epoxy −40°C to +85°C
- **CN** Ceramic 0°C to +75°C
- **CP** Epoxy 0°C to +75°C

Microcomputer Components Package
- **D** Hermetic DIP
- **F** Flatpak
- **P** Plastic DIP
- **X** Chip

Temperature
- **C** 0°C to +75°C
- **M** −55°C to +125°C

Process to MIL-M-883B
- **B** Level B
- **S** Level S

Prefix	Device	Suffix
REF	01	C T

Electrical Grade and Temperature — C
Package — T

Prefix	Device	Suffix
	29611	A D M B

Performance — A
A — Enhanced
E — AMD Equivalent
Package — D
Temperature — M
Processing to MIL-STD-883B — B

Prefix	Device	Suffix
RFII	2	CJ

Temperature — 2
0 or 1 −55 to 125°C
2 or 3 0 to 70°C
Package — CJ

RCA

RCA Solid State

Description
- **CA** Linear ICs
- **CD** CMOS Digital ICs
- **CDM** CMOS — LSI
- **CDP** CMOS — LSI
- **CMM** CMOS — LSI
- **MWS** CMOS — LSI
- **LM** Linear ICs
- **PA** Gate Arrays

Version
- **A** Modified Version, Unilaterally Interchangeable with Prototype
- **B** Modified Version, Unilaterally Interchangeable with A Version, and with Prototype
- **C** Modified Version

Package
- **D** Ceramic DIP
- **E** Plastic DIP
- **EM** Modified Dual-In-Line Plastic Package with "Power Slab"
- **F** Ceramic DIP, Frit Seal
- **H** Chip
- **J** 3-Layer Ceramic Leadless Chip Carrier
- **K** Ceramic Flat Package
- **L** Single Layer Ceramic Leadless Chip Carrier
- **M** TO-220 Package with Horizontal-Mount Lead Form
- **P** Dual-In-Line Plastic Package with "Power Slab"
- **Q** Quad-In-Line Plastic Package
- **QM** Modified Quad-In-Line Package
- **S** TO-5 Package with DIL-CAN
- **T** TO-5 Package with Straight Leads
- **V1** TO-5 Package with Radial Formed Leads
- **W** Staggered Quad-In-Line Plastic Package

Prefix	Device	Suffix
CD	4070	AD

Version — A
Package — D

Manufacturer Device Identification	Part Number Prefix	Part Number Suffix	Example

RETICON

EG&G RETICON

Prefix

Previous Products
- **RA** Area Array
- **RL** Linear Array
- **SAD** Serial Analog Delay
- **SAM** Serial Analog Memory
- **TAD** Tapped Analog Delay

New Analog Products
- **R5** Reticon Analog

Family
- **0** Complex Special Functions
- **1** Simple Delays
- **2** Tapped Delay
- **3** Analog Memory
- **4** Correlator
- **5** Multiplexer, Parallel to Serial Converter
- **6** Filters

Suffix

Code (for Corresponding Products)
- No. of Columns and Lines
- No. of Elements
- No. of Storage Elements
- No. of Storage Elements
- No. of Storage Elements
- No. of Taps

Example

Prefix	Device	Suffix
RA	50x50	A
RL	1024	C
TAD	32	A

Code
Revision

Prefix	Device	Suffix
R5 X	YY	A -1

Family
Revision (If Required)
Member of Device Type (If Required)

ROCKWELL

Rockwell

Prefix

R Rockwell

Suffix

NMOS Devices

Frequency Range
- **No Suffix** 1 MHz
- **A** 2 MHz
- **B** 3 MHz

Package
- **C** Ceramic
- **P** Plastic
- **Q** QUIP

Temperature
- **No Suffix** 0°C to 70°C
- **E** −40°C to 85°C (Industrial)
- **MT** −55°C to 125°C (Military)
- **M** MIL-STD-883, Class B

CMOS Devices

Frequency Range
- **1** 1 MHz
- **2** 2 MHz
- **3** 3 MHz
- **4** 4 MHz

Package
- **C** Ceramic
- **P** Plastic
- **Q** QUIP

Temperature
- **No suffix** 0°C to +70°C
- **E** −40°C to +85°C
- **MT** −55°C to 125°C (Military)
- **M** MIL-STD-883, Class B

Example

Prefix	Device	Suffix
R	65C02	C4E

Package
Frequency Range
Temperature

Prefix	Device	Suffix
R	6531	ACE

Frequency Range
Package
Temperature

SANYO

Prefix

Designation
- **LA** Bipolar Linear
- **LB** Bipolar - Digital
- **LC** CMOS
- **LE** MNMOS
- **LM** PMOS, NMOS
- **STK** Thick Film

Example

Prefix	Device
LA	1230

SEEQ

seeQ Technology, Incorporated

Prefix

Temperature Range
- **Q** For Commercial Temperature 0°C to +70°C
- **E** For Extended Temperature −40°C to +85°C
- **M** For Military Temperature −55°C to +125°C

Suffix

MIL-STD-883
Level B Processing
Read access time of memory device (ns)

Package
- **D** For Cerdip
- **L** For Leadless Chip Carrier

Example

Prefix	Device	Suffix
D Q	2816	350 B

Package Type
Temperature Range
Read Access Time of Memory Device (ns)
MIL-STD-883 Level B Processing

Manufacturer Device Identification	Part Number: Prefix	Part Number: Suffix	Example

SGS SEMICONDUCTOR CORPORATION

(Marking)

SGS. SEMICONDUCTOR CORPORATION
(Current Logo)

Prefix

Prefixes assigned by the European Association "PRO ELECTRON" (See PRO ELECTRON)

H	High Level Logic
HB, HC	CMOS
L, LS	Linear Professional
M	MOS
TAA	Linear Consumer
TBA	Linear Consumer
TCA	Linear Consumer
TDA	Linear Consumer

Example

Prefix	Device
TDA	1200

SIEMENS

Prefix

Prefixes assigned by the European Association "PRO ELECTRON". (See PRO ELECTRON)

Example

Prefix	Device
SDA	5010
TDA	2030
UAA	170

SIERRA SEMICONDUCTOR

SIERRA SEMICONDUCTOR

Suffix

Temperature Range

C	Commercial 0 to +70 deg. C
E	Extended −40 to +85 deg. C
M	Military −55 to +125 deg. C

Package Type

N	Molded dual in-line
J	Cerdip

Example

Prefix	Device	Suffix
SC	12345	A B 1

SC — Sierra CMOS
12345 — Part Number
A — Temp. Range
B — Package Type
1 — Speed Selection

SIGNETICS

signetics

Prefix

Temperature

N	0°C to +70°C
S	−55°C to +125°C
NE	0°C to +70°C
SA	−40°C to +85°C
SE	−55°C to +125°C
SU	−25°C to +85°C
55	−55°C to +125°C
75	0°C to +70°C
DS	Alternate Source to National Part Number
MC	Alternate Source to Motorola Part Number
ULN	Alternate Source to Sprague Part Number
μA	Alternate Source to Fairchild Part Number
AM	Alternate Source to AMD Part Number

Device Family

CA, DS	Linear Industry Standard
DAC	D/A Converter
HEF	LOCMOS Family
JB	Mil Rel — Jan — Old Desig.
JM	Mil Rel — Jan — New Desig.
LF, LH	Linear Industry Standard
LM, MC	Linear Industry Standard
MB, MJ	CMOS
OM	Linear Industry Standard
PCD, PCE	CMOS
SAA, SAB	Digital Industry Standard
SAF	Digital Industry Standard
SD	Linear DMOS
SG, TAA	Linear Industry Standard
TBA, TCA	Linear Industry Standard
TDA, TDB	Linear Industry Standard
TEA	Linear Industry Standard
UA, ULN	Linear Industry Standard
SCN	Microprocessor N Channel
SCB	Microprocessor Bipolar
SCC	Microprocessor CMOS

Suffix

Package

CK	Philips Die
D	8, 14, 15-Lead DIL Plastic Microminiature (SO)
EC	4-Lead TO-46 can
EE	4-Lead TO-72 can
F	14, 16, 18, 20, 22, 24, 28-Lead DIL CERDIP
FE	8-Lead DIL CERDIP
G	20, 28, 44-Lead Square Leadless
H	4, 8, 10-Lead TO-5 can
I	8, 10, 14, 16, 18, 24, 28, 40, 50-Lead DIL CERAMIC
K	2-Lead TO-3 can
N	8, 14, 16, 18, 20, 22, 24, 28, 40-Lead DIL PLASTIC
N14	14-Lead DIL Plastic for those products available in both 8 and 14-Lead packages, the 14-Lead package will be identified with N14
Q	10, 14, 16, 24-Lead CERAMIC Flat
R	16, 18, 24, 28, 40-Lead CERAMIC-Beryllia-Flat
SK	Microprocessor Kits
TA	8-Lead TO-5 can
U	9-, 13-Lead Single-in-Line
Y	24-Pin Ceramic Square Flat-pack with Radial Leads
W	10, 14, 16, 24-Lead CERPAC

Example

Prefix	Device	Suffix
	74123	N
N	8X02	N

N — Temperature
N — Package

Manufacturer Device Identification	Part Number Prefix	Part Number Suffix	Example
SILICON GENERAL Silicon General	**SG** Silicon General	**Characteristics** **A** Improved Electrical Specifications **C** Reduced Temperature Range **Package** **F** Flat Pack **J** 14, 16-Pin DIP (CerDIP) **K** TO-3 Power Pack **M** 8-Pin Plastic DIP **N** 14, 16-Pin Plastic DIP **P** TO-220 Plastic **R** TO-66 (3-Pin and 8-Pin) **T** TO-5 Metal Can (TO-39/99/100/101) **Y** 8-Pin DIP (CerDIP) **W** 16-Pin Batwing (CerDIP) **S** Multiwatt 15 **L** Leadless Chip Carrier	Prefix Device Suffix SG 1524 J SG 108A T Characteristics Package
SILICONIX	**Description** **(1, 2 or 3 letters)** **D** Drivers for FET Switches **DF** Digital Function **DG** Analog Switches **DG** Analog Switches and Multiplexers **G** Multi-Channel FETs **L** Linear **LD** Linear Digital Combinations **PWM** Pulse Width Modulator **SD** Siliconix DMOS Product **SI** Siliconix Proprietary or Second Source Parts **SJM** QPL Listed Part	**Operating Temperature Range — ICs** **(1 Letter)** **A** −55°C to +125°C **B** −20°C to + 85°C **C** 0°C to + 70°C **D** −40°C to + 85°C **B and D** temperature rane parts receive industrial processing unless a process option dash number is added **Packages** **(1 Letter)** **A** Metal Can — Hermetic **J** Dual-In-Line Package — Plastic **K** Dual-In-Line Package — CERDIP **L** Flat Package **P** Dual-In-Line Package — Side Braze — Hermetic **R** Dual-In-Line Package — Side Braze — Hermetic **Y** Small Outline Package **Process Option** **/883** MIL-STD-883. Class B Compliant — Non JAN **−2** Non Compliant — Non JAN **(−4)** 160 Hour Burn-In **BS9000** BS9000 Compliant **Packages — MOSPOWER** **Hermetic** **A** TO-3 **B** TO-39 **E** TO-52 **G** TO-18 **P** Sidebraze DIP **Plastic** **D** TO-220 **F** TO-202 **J** Plastic DIP **L** TO-92 **M** TO-237 **V** TO-218 4-Pin DIP & SOT-23 also available	**ICs** Prefix Device Suffix DG 187 A P /883 DG 303 A B P (-4) DG 506 A C J Family Device Revision Operating Temperature Range Package Process Option **MOSPOWER** Prefix Device Suffix V N 6 7 A B Vertical MOSPOWER Substrate Voltage [x10] Selection Geometry Package
S-MOS SYSTEMS SMOS SYSTEMS (Current Logo) (Product Marking)	**S** S-MOS **Family** **RM** RAM **TC** Telecom **VM** Melody **CI** Converter **ED** Display Driver **LA** Logic Array **MM** Masked ROM **MC** Microcomputer/Peripheral	**Package** **C** Plastic DIP **D** Die Form **H** Cerdip **F** Flatpack **M** Mini Flatpack	Prefix Device Suffix SRM 2016 C15 Family Package Speed (15 = 150 ns)

Manufacturer Device Identification | Part Number: Prefix | Suffix | Example

SOLITRON

(Current) (Discontinued)

Prefix

- **CM** CMOS
- **UC4xxx** Linear
- **UC6xxx** PMOS Memory (discontinued)
- **UC7xxx** PMOS Memory (discontinued)

Suffix

Process (CMOS)

- **(None)** Limited Operating Voltage Range
- **A** 3-15 Volt Operating Voltage
- **B** 3-18 Volt Operating Voltage

Package Style, Temperature Range (CMOS)

- **D** Ceramic DIP, −55°C to 125°C
- **E** Epoxy DIP, −40°C to 85°C
- **F** Cer DIP (Frit Seal) −55°C to 125°C
- **H** Uncased Die
- **K** Flatpack, −55°C to 125°C

Package Style, Temperature Range (Linear)

- **(None)** TO-99, −65°C to 125°C
- **C** TO-99, 0°C to 70°C
- **CE** 8 lead MINI DIP, 0°C to 70°C
- **ID** Uncased Die

Example

Prefix	Device	Suffix
CM	4000	AD

AD: Package/Temperature

SPRAGUE ELECTRIC

SPRAGUE

Prefix

Family

- **UC** CMOS/Complex Arrays
- **UD** Power Drivers
- **UG** Hall Effect Circuits
- **UL** Linear Circuits
- **UT** Thyristor Arrays (discontinued)

Temperature

- **N** Limited Temperature Range −20°C to +85°C Typical
- **Q** Industrial Temperature Range −40°C to +85°C
- **S** Military Temperature Range −55°C to +125°C
- **X** Preproduction Device

Suffix

Package

- **A** Plastic DIP
- **B** Plastic DIP with Heat Sink Tabs
- **C** Chip
- **CW** Probed Wafer
- **D** 3-Pin Metal Can
- **E** Leadless Chip Carrier
- **H** Hermetic DIP
- **J** 14-Pin Hermetic Flat Pack
- **L** Plastic SOIC
- **M** 8-Pin Plastic DIP
- **Q** Batwing Quad In-Line
- **R** Ceramic DIP
- **S** 4-Pin SIP
- **T** 3-Pin SIP
- **U** Thin 3-Pin SIP
- **V** Flange Mount TO-3
- **W** 12-Pin SIP
- **Y** TO-92 Transistor
- **Z** 5-Lead TO-220

Example

Prefix	Device	Suffix
UL N	2111	A

UL: Family
N: Temperature
A: Package

Prefix

Family

- **UH** Peripheral Power/Display Drivers

Suffix

Package

- **C** Hermetic Flatpack
- **D** Hermetic DIP
- **K** Chip
- **P** Plastic DIP

Example

Prefix	Device
UH P	400

UH: Family
P: Package

SPRAGUE SOLID STATE

SPRAGUE SOLID STATE

Prefix

Screening Level

- **BCL** High Reliability Logic
- **BCM** High Reliability Memory
- **BPL** High Reliability Programmable Logic
- **SCL** Standard Logic
- **SCM** Standard Memory
- **SPL** Standard Programmable Logic
- **SS** Standard High Performance Logic
- **883C** MIL-STD-883C
- **JM38510/** MIL-M-38510

Suffix

Options

- **1** 100 ns
- **2** 200 ns
- Etc.

Temperature Range

- **C** −55°C to 125°C
- **D** −55°C to 125°C
- **E** −40°C to 85°C
- **H** −55°C to 125°C

Package

- **C** Cerdip
- **E** Epoxy
- **F** Epoxy Flatpack
- **HN** Dice
- **HW** Wafers
- **Q** Quartz-Widowed Cerdip
- **T** Small Outline Epoxy

Example

Prefix	Device	Suffix
SCL	4XXXB	C +

SCL: Screening Level
4XXXB: Device Type
C: Package
+: Blank or Solid Plus

Prefix	Device	Suffix
SCM	23C128	E - 9898

SCM: Screening Level
23C128: Device Type
E: Package
-: Standard Program
9898: Option or

4 Digit custom ROM number specifying data pattern and speed option

Manufacturer Device Identification	Part Number Prefix	Part Number Suffix	Example

SPRAGUE SOLID STATE (continued)

Example

Prefix	Device	Suffix
SS	74HC139	C

- SS: Screening Level
- 74HC139: Device Type
- C: Package

STANDARD MICROSYSTEMS

Family

Code	Family
COM	Data Communications
CRT	CRT Display
SR	Shift Register
KR	Keyboard Encoder
FDC	Floppy Disk
CCC	Cassette/Cartridge
HDC	Hard Disk
MPU	Microprocessor

Functional Options

Code	Option	
T	TTL Clock Input	
H	High Speed	
ST	ROM	
STD	Program Options	
PRO	See Catalog	
HR	MIL-STD-883 Level B Equivalent	
BI	Burned-In	
A	Speed 20 MHz	
B	Speed 15 MHz	CRT Devices Only
C	Speed 10 MHz	

Program Options

X or XXX Specifies Mask Program

Package

Code	Package
No Letter	Ceramic
CD	Cerdip
P	Plastic

Example

Prefix	Device	Suffix
COM	5016	T X P

- COM: Family
- T: Function
- X: Program Option
- P: Package

TECHNITROL, INC.

Technitrol, Inc.

Family

MEDM 2

Example

Prefix	Device	Suffix
NEDM 2	100	M Y

- 100: Frequency 10 MHz
- M: Military
- Y: Special Testing

TELEDYNE PHILBRICK

TELEDYNE PHILBRICK

Description

Series	Description
1000 Series	Operational Amplifier, Module
1300 Series	Operational Amplifier, IC
1400 Series	Operational Amplifier, FET IC
1700 Series	Operational Amplifier Chopper Stabilized
2200 Series	Power Supply, AC Input, PC Mount
2300 Series	Power Supply, DC Input, PC Mount
2400 Series	Power Supply, AC Input, Chassis Mount
4000 Series	Digital to Analog Converters
4100 Series	Analog to Digital Converters
4200 Series	Modular Instrumentation Amplifiers
4300 Series	Non-Linear Function Modules
4700 Series	Voltage to Frequency and Frequency to Voltage Converters
4800 Series	Sample-Hold Amplifiers
4900 Series	Deglitchers

TELEDYNE SEMICONDUCTOR

Temperature

Code	Temperature
C	0°C to 70°C
M	−55°C to 125°C
I	−25°C to +85°C

Package

Code	Package
J	CerDIP
P	Plastic Dip
Y	Dice
BQ	Quad Flat Package

Example

Device	Suffix
TSC7109	CP

- C: Temperature
- P: Package

TELEFUNKEN

TELE FUN KEN

Note: ICs are marked **TFK**

Prefixes Assigned by the European Association "PRO ELECTRON" (See Pro Electron)

Proprietary Devices

Code	Device
U	Integrated Circuits
B	Bipolar
M	MOS

Example

Prefix	Device	Suffix
U	113	B

TEXAS INSTRUMENTS

Prefix	Description
AC	Advanced Bipolar Circuits
SBP	Bipolar Microprocessor
SMJ	MOS Memory and Microprocessor 883B
SN	Standard Circuit
SNJ	Standard Circuit: 883B, JEDEC Std 101
TAC	CMOS Logic Array
TAL	Low-Power Schottky TTL Logic Array
TAT	STL Logic Array
TL	Linear Circuit
TLC	LinCMOS™ Circuit
TIEF	Transimpedance Amplifiers
TIES	Infrared Source
TIFPLA	Bipolar Field Programmable Logic Array
TIBPAL	Bipolar Programmable Array Logic

Package

Code	Package
JT	Ceramic DIP, 24-pin, 300-mil
J, JG	Ceramic DIP
JD	Side braze ceramic DIP
KA, KC, KD, KF	Plastic power tab
LP	Plastic 3-lead
N, NE	Plastic DIP
N	Plastic DIP
T	Metal Flat Pack
WA, W	Ceramic Flat Pack
NT	Plastic DIP, 24 pin 300 mil
U	Ceramic Flat Pack
NF	Plastic DIP, 28 pin 400 mil
FH	Ceramic Single Layer Sq. Chip Carrier JEDEC Standard
FN	Plastic Single Layer Sq. Chip Carrier

Example

Prefix	Device	Suffix
SN 74	S188	J

- SN: Description
- 74: Temperature Range
- J: Package

Prefix	Device	Suffix
TMS	4027	-15 JL

- -15: Speed
- J: Package
- L: Temperature Range

Manufacturer Device Identification	Part Number: Prefix	Part Number: Suffix	Example

TEXAS INSTRUMENTS (continued)

Prefix		Suffix	
FP	Rect. Chip Carrier for DRAMs	**FK**	Multi-Layer Sq. Chip Carrier JEDEC Standard
TMS	MOS Memory/Microprocessor	**FE**	Multi-Layer Rect. Chip Carrier
TM	Microcomputer Module	**WC**	Ceramic Flat Pack
TBP	Bipolar Memory	**FG**	Multilayer Rect. Chip Carrier JEDEC Standard
TC	CCD Imager	**8D**	Small-outline Package
TCM	Telecommunications IC	**14D**	Small-outline Package
TIED	Infrared Detector	**16D**	Small-outline Package
TIL	Optoelectronic Circuit		
VM	Voice Memory Circuit		
JANB	JM38510 — Qualified Circuits, Level B		
JBP	Bipolar PROM: 883C, JEDEC Std 101		

Temperature (Most Devices) Digital & Interface Prefixes

Series: −55°C to 125°C	Series: 0°C to 70°C	Description
54	**74**	Standard TTL Circuits
54H	**74H**	High-speed TTL
54L		Low-power TTL
54LS	**74LS**	Low-power Schottky TTL
54S	**74S**	Schottky TTL
55	**75**	Standard Interface Circuits
54AS	**74AS**	Advanced Schottky TTL
54HC/54HCT	**74HC/74HCT***	High-Speed CMOS
54ALS	**74ALS**	Advanced Low-power Schottky TTL
	76	Advanced Circuits

* −40°C to 85°C

Bipolar Suffixes	MOS Suffixes	Speed (MOS Only)
C 0°C to 70°C	**L** 0°C to 70°C	—15 150 ns Max. Access
E −40°C to 85°C	**M** −55°C to 125°C	—20 200 ns Max. Access
I −25°C to 85°C or * −40°C to 85°C	**E** −40°C to 85°C	—25 250 ns Max. Access
M −55°C to 125°C	**I** −25°C to 85°C or −40°C to 85°C	— 35 350 ns Max. Access
	S Special Range	—45 450 ns Max. Access

TOSHIBA

Description		Package	
TA	Bipolar Linear	**P**	Plastic
TC	CMOS	**M**	Metal
TD	Bipolar Digital	**A**	Improved Type
TM	MOS	**C**	Ceramic

Prefix	Device	Suffix
TA	7173	AP

TRW LSI PRODUCTS

LSI Products Division
TRW Electronic Components Group

Multiplier Family

- **H** 3rd Generation (2 m)
- **K** 4th Generation (1 m)

Example

MPY012HJ1C
MPY112KJ4C

Family

- **MPY** Triple Diffused Bipolar Multipliers
- **TDC** TRW Triple Diffused Bipolar Catalog Products
- **TMC** TRW CMOS Catalog Products

Screening and Temperature

Temp/Process	Com	Hi-Rel.	Only Com B.I.
T_A = 0 to 70°C	C	S	G
T_C = 55 to 125°C	F	A	N

For screening and temperature specifics, you must check in each data sheet to see applicable temperature range

Packages

B	CERDIP
C	Ceramic Chip Carrier (CCP — JEDEC Type C)
E	Eurocard PC Board
F	Flatpack (FPK)
J	Ceramic DIP
L	Leaded Chip Carrier
P	PC Board
B6	28 Pin CERDIP
B7	24 LD CERDIP
B8	18 Pin CERDIP
C1	68 CCP, 50 MIL
C2	44 CCP, 50 MIL
C3	28 CCP, 50 MIL
E1	Eurocard Format PC Board
F1	64 LD FPK w/o H/S
G7	88 Pin Grid
J0	64 Pin, Lid Up, No H/S
J1	64 Pin, Lid Down, Flat H/S
J3	64 Pin, Lid Down, No H/S
J4	48 Pin
J5	40 Pin
J6	28 Pin
J7	24 Pin
J8	18 Pin
J9	16 Pin
L1	68 Leaded Chip Carrier
P1	Printed Circuit Board

Prefix	Device			Suffix
TDC	1016	J5	C	10

Package — J5
Screening — C
Electrical — 10

Manufacturer Device Identification	Part Number Prefix	Part Number Suffix	Example
UNIVERSAL SEMICONDUCTOR UNIVERSAL SEMICONDUCTOR INC.	**Family** **5, 3, 2 A thru I** Gate Arrays	**Temperature** **No Letter** 0°C to +70°C **X** Special **Package** **C** Ceramic DIP **P** Plastic Molded DIP **S** Sidebraze **X** Chip Carrier **Y** Plastic Leadless	**Prefix** 5D **Device** 2147 **Suffix** XD 5D: 5 Micron, 960 Gate X: Temperature Range D: Package
VLSI TECHNOLOGY	**Description** **VC** Custom **VF** Foundry **VG** Gate Array **VH** Hybrid **VL** Logic **VM** Military **VP** Programmable Devices **VS** User-designed VLSI **VT** Memory **VU** Design Center **Temperature Range** **A** Automotive **C** Commercial **I** Industrial **M** Military	**Package Type** **A** Leaded Plastic Chip Carrier **C** Sidebrazed Ceramic **F** Leadless Ceramic Chip Carrier **G** Pin Grid Array **P** Plastic DIP **T** Leaded Ceramic Chip Carrier **V** Die-Plated **W** Die in Wafer Form **Y** Dip on PC Board **Z** Chip on PC Board **Environmental Codes** **B** Mil Std 883, Level B **C** Mil Std 883, Level C **I** Burn In **J** JAN Product **S** Mil Std 883, Class S	**Prefix** VC **Device** 9999999 **Suffix** BB PTE BB: Bin Code P: Package T: Temperature Range E: Environmental Code
WESTERN DESIGN CENTER WDC	**Family** **WC** Custom **W** Standard	**Package** **P** Plastic **C** Ceramic **D** Cerdip **E** Leadless Chip Carrier **X** Dice **Temperature** **Blank** 0°C to +70°C **I** −40°C to +85°C **M** −55°C to +125°C **Performance** **2** 2 MHz **4** 4 MHz **6** 6 MHz **8** 8 MHz	**Prefix** W **Device** 65C816 **Suffix** P I -2 W: Family P: Package I: Temperature -2: Performance
WESTERN DIGITAL WESTERN DIGITAL CORPORATION (Current) (Discontinued)	**Package (Obsolete)** **A** 40 Lead DIP-Ceramic **B** 40 Lead DIP-Relpak **C** 24 Lead DIP-Ceramic **E** 28 Lead DIP-Ceramic **F** 28 Lead DIP Relpak **L** 18 Lead DIP-Ceramic **M** 18 Lead DIP-Plastic (Totally Encapsulated) **P** 40 Lead DIP-Plastic (Totally Encapsulated) **R** 28 Lead DIP-Plastic (Totally Encapsulated) **T** 48 Lead DIP-Ceramic **U** 20 Lead DIP-Ceramic **V** 20 Lead DIP-Plastic (Totally Encapsulated) **X** Ceramic Kit **Y** Plastic Kit **Package (Current)** **A** Ceramic Side Braze **C** Cerdip **P** Plastic (Encap) **D** Ceramic Chip Carrier-Leadless **G** Ceramic Chip Carrier-Leaded **H** Plastic Chip Carrier-Leadless **J** Plastic Chip Carrier-Leaded		**Prefix** WD **Device** 1943 **Suffix** M 00 M: Package 00: Special Parameter **Prefix** WD **Device** 1943 **Suffix** PD 00 PD: Package 00: Special Parameter

Manufacturer Device Identification | Part Number: Prefix | Suffix | Example

WESTERN DIGITAL (continued)

Lead Count

A	< 14 Lead
B	14 Lead
C	16 Lead
D	18 Lead
E	20 Lead
F	22 Lead
G	24 Lead
H	28 Lead
L	40 Lead
M	44 Lead
N	48 Lead
S	64 Lead
T	68 Lead
Z	Kit

XICOR

Xicor

Prefix

X Xicor

Suffix

Package

D	Ceramic DIP
E	Ceramic DIP
H	Die
J	Plastic LDCC
P	Plastic DIP

Temperature Range

Blank	0 to 70°C
I	−40 to 85°C
M	−50 to 125°

Process Technology

Blank	NMOS
C	CMOS

Speed

20	200 ns
25	250 ns
Blank	300 ns
35	350 ns
45	450 ns

Processing Level

Blank	Standard
B	Class B

Endurance

Blank	1000 Data Changes/Bit
/5	5000 Data Changes/Bit
/10	10000 Data Changes/Bit

Example

E²PROMs

Prefix	Device	Suffix
X	28C64A	D M B-35

Process Technology
Package
Temperature Range
Processing Level
Access Time

Serial E²PROMs

Prefix	Device	Suffix
X	24C04	D M B

Package
Temperature Range
Processing Level

NOVRAMs

Prefix	Device	Suffix
X	2212	D M B/10-35

Package
Temperature Range
Processing Level
Endurance
Access Time

Serial NOVRAMs

Prefix	Device	Suffix
X	2444	D M/10

Package
Temperature Range
Endurance

ZILOG

Zilog
an affiliate of
EXXON Corporation
(Current)

Zilog
(Discontinued)

Prefix

Family

Z80
Z

Speed

A	4.0 MHz
blank	2.5 MHz
B	6.0 MHz
L	Low Power
H	8.0 MHz

Device

CPU	Central Processor Unit
PIO	Parallel Input/Output Unit
CTC	Counter Timer
SIO	Serial Input/Output
DMA	Direct Memory Access

Suffix

Package

C	Ceramic
D	Cerdip
P	Plastic
Q	Ceramic Quad-in-Line
R	Ceramic Piggyback

Temperature

E	−40°C to +85°C
M	−55°C to +125°C
S	0°C to +70°C

Definition Of Symbols

↑	— Price Increase
↓	— Price Decrease
N	New Product

Screening

S	Standard
M	Military

Example

Prefix	Device	Suffix
Z	8400	B P S XX

Speed
Package
Temperature
Environmental Flow
(E.G. B1)

Last Page This Section. Next Page 351.

WHAT'S NEW IN IC MASTER

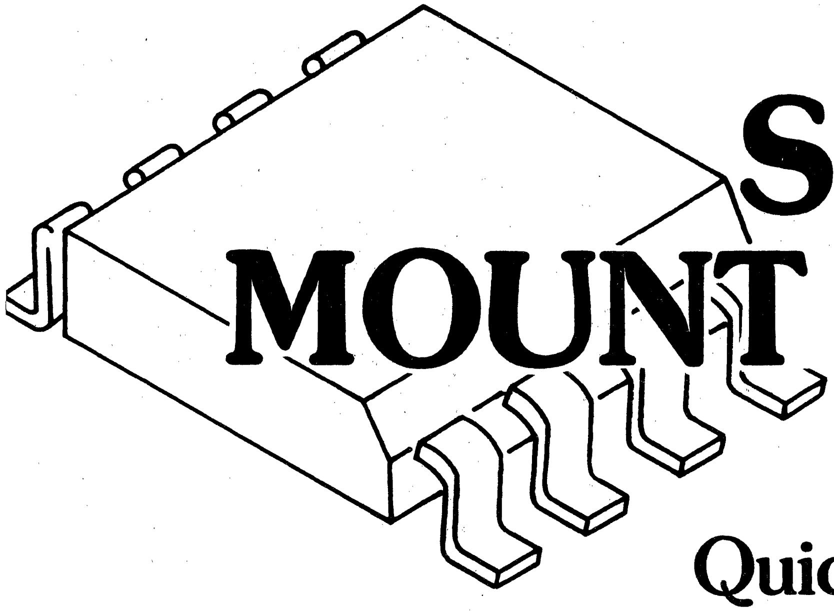

DON'T MISS THE NEW SURFACE MOUNT DEVICE IC SECTION

Quickly shows you by base number and package, what surface mount devices are available and from which manufacturers.

Volume II, Page 5201

WHAT'S NEW IN IC MASTER

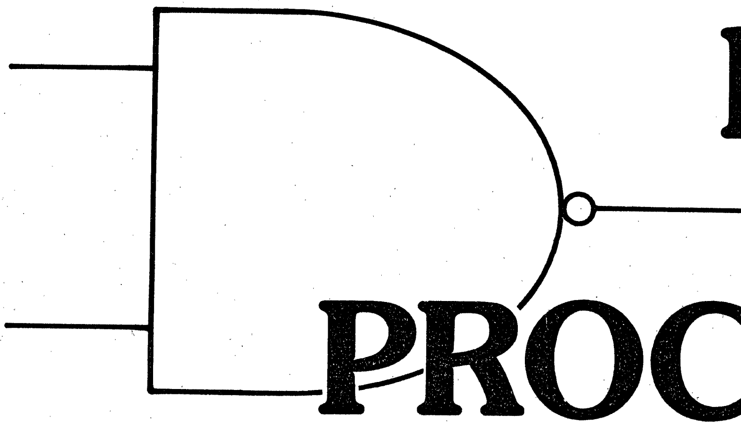

DON'T MISS THE NEW DIGITAL SIGNAL PROCESSING IC SECTION

Easy to find DSP devices.

Volume I, Page 801

WHAT'S NEW IN IC MASTER

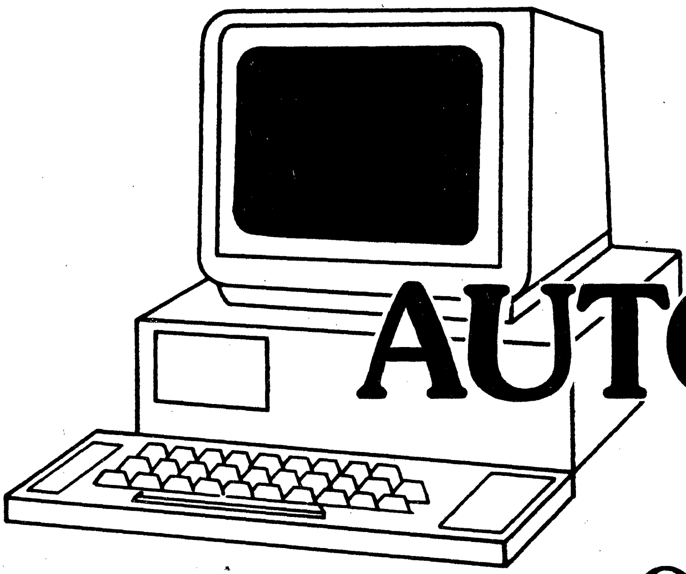

DON'T MISS THE NEW DESIGN AUTOMATION IC SECTION

Quick and easy way to determine relationships between workstations, computers, software, semicustom manufacturers and CAE/CAD providers.

Volume II, page 4901

SECTION	PRODUCTS IN SECTION
Digital	Arithmetic functions, buffers/inverters, counters, decoders, drivers, flip-flops, gates, latches, memories, multiplexers, multivibrators, oscillators/dividers, shift registers, translators.
Military	Military-commercial and commercial-military cross-references; QPL-38510/xx list; military ICs.
Microprocesser	Microprocessors, microcomputers, and microprocessor system components.
Microprocessor Development Systems	Systems covered range from simple, single-user, text-editing stations to multi-user computers dedicated to software development.
Microcomputer Support Boards	Boards with functions and peripheral controllers.
Interface	Analog switches, analog-to-digital converters, digital-to-analog converters, display converters, display drivers, error checking circuits, keyboard encoders-decoders, drivers, sense amplifiers, and transmitters/receivers.
Linear	Special-purpose amplifiers, arrays, comparators, consumer circuits, followers, operational ampliflers, phase locked loop circuits, telecommunication circuits, timers, voltage regulators, and special functions.
Memory	Character generators, code converters, FIFOs, LIFOS, E²PROMs, PROMs, RAMs, ROMs and shift registers.
Custom/ Semicustom	Custom/Semicustom linear and digital gate arrays, standard cells, programmable logic arrays (PLAs), and all compatible design tools.
Design Automation	Design Automation interrelated tables showing relationships among workstations, computers, software, semicustom manufacturers and CAE/CAD providers.
SMD Packages	Surface Mount Directory from base device numbers to surface mount packages and suppliers.
Alternate Source Directory	Alternate Source Directory... Industry-wide alternate source cross reference pin-for-pin and functional equivalents to available ICs.

SIX KEY PHASES OF NEW SYSTEM DEVELOPMENT

Planning

A good design

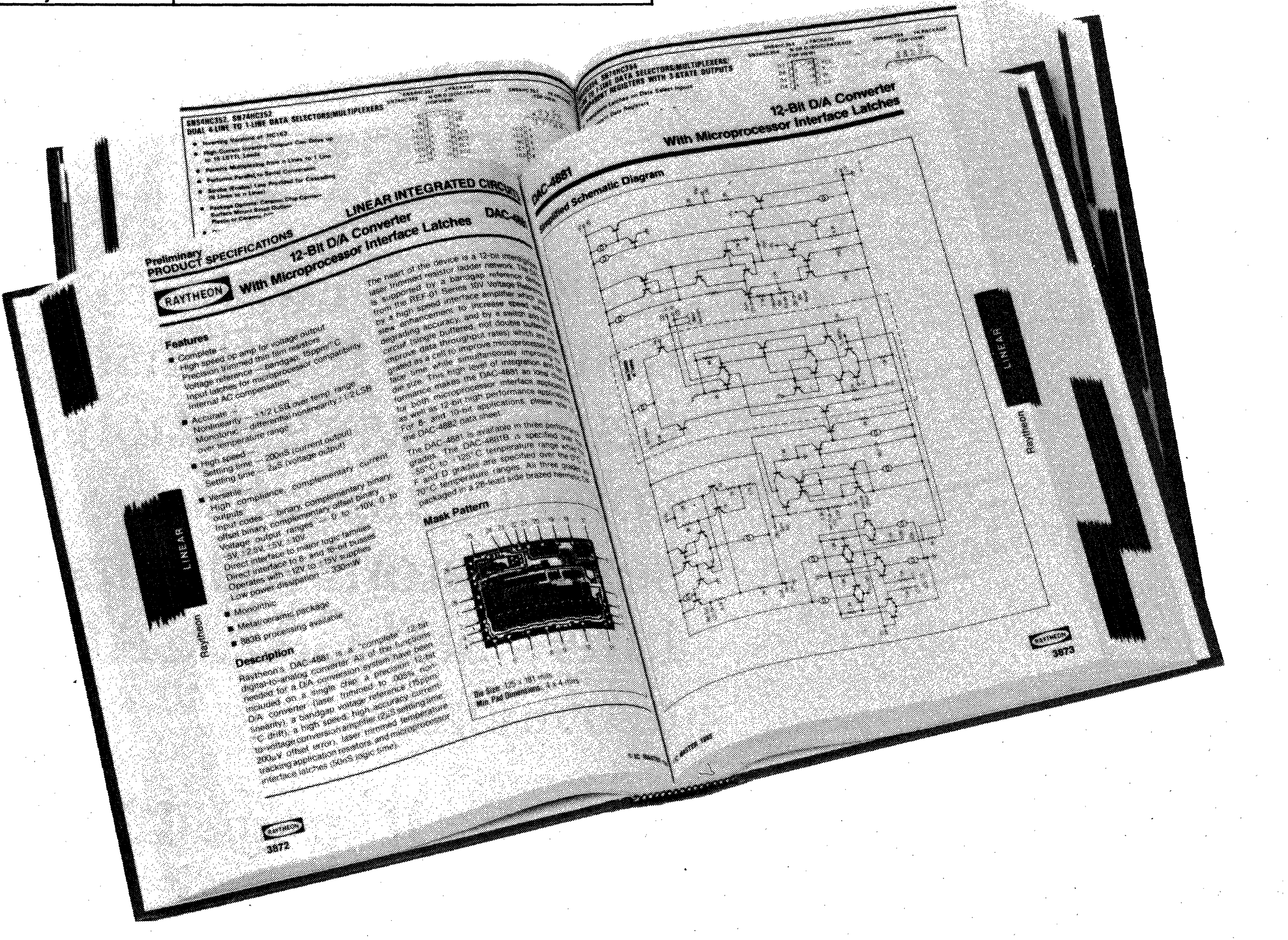
LINEAR INTEGRATED CIRCUITS

Preliminary PRODUCT SPECIFICATIONS

RAYTHEON

12-Bit D/A Converter With Microprocessor Interface Latches

DAC-4881

Features

Description

Mask Pattern

Simplified Schematic Diagram

LINEAR

Raytheon

3872

3873

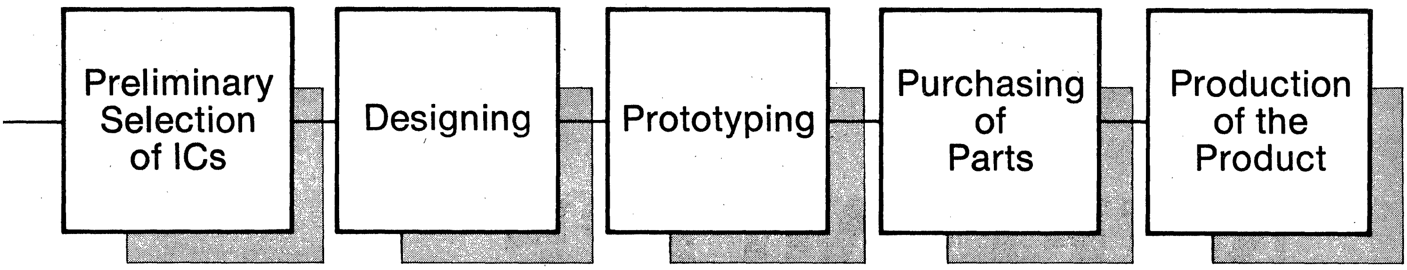

is "mastered" early.

The best time for an engineer to pick the integrated circuits that will go into his next design is at an early stage in the design process when the engineer's plans are still flexible enough to take full advantage of the features selected.

There is a point in the early phases of every design when engineers focus on selecting integrated circuits. They examine specifications, weigh relative strengths and weaknesses of various devices, and choose the field of candidates. This critical time in the design cycle when designers want to be sure the right devices are in serious contention for their applications.

This is when the engineer reaches into his technical reference library. Of the material on his shelves, **IC MASTER** is the only reference source that has been especially prepared for this moment.

The engineer can look up each precise function that he needs and see all of the devices—and their manufacturers—that might satisfy his requirements. He sees this information for all manufacturers, not just for advertisers. But if an IC maker has chosen to include technical data for his products in **IC MASTER**, the engineer sees each index listing for that manufacturer in **bold face type** accompanied by the **page number** on which the data appears; the engineer can then turn immediately to the advertiser's technical data to see if the device fits his needs.

Next time, begin with the MASTER...where engineering design begins!

IC MASTER

NEED MORE PRODUCT DETAILS?

Use the IC MASTER's NEW Telemarketing response system to request additional product information from IC manufacturers and CAE/CAD providers. CALL **800 443-0100 (EXT.) 518**

48 hour turn-around on your request . . . 24 hours a day, 7 days a week service.

APPLICATION NOTE DIRECTORY

The Application Note Directory is a comprehensive guide to the many IC and Microcomputer Board application notes available. It lists the devices covered, describes each note, and tells who publishes each one.

HOW TO USE THE APPLICATION NOTE DIRECTORY

The application notes in this directory can be located by function or device number.

1. To find out what is published by function, locate the closest topics in the index at right, turn to the pages indicated, and scan through the listings.
2. To find all the application notes covering a given device, look up the device in the Part Number Index at the front of this book. The ¶ sign leads to application notes.

The application note descriptions are organized under the headings: Digital, Microprocessor, Microcomputer Boards, Interface, Linear, Memory, Custom/Semicustom and Packaging. Beneath those headings are functional and applications categories arranged alphabetically. Within each category the notes are arranged in alphabetical sequence by title. The mixing of functions and applications is necessary, since application notes do not lend themselves to classification entirely by function or entirely by application. When an application note fits under several categories, it is listed in one and cross referenced by the others. This may mean that you have to spend five minutes checking a number of categories to be sure you've found everything you want, but finding suitable information can save you considerable design time. If an application note covers specific devices or it shows in some detail how certain devices are used, these device numbers are listed in parentheses just below the title.

The application note descriptions are as short as possible. They are designed to save you time in reading while giving an overall sense of the contents. The length of each note is indicated in parentheses on the last line; if the note is bound into a book, the last line will show that it is part of a handbook, databook, catalog, etc.

Once you have determined which application notes you need, contact the manufacturer's sales office or write to the manufacturer. Be sure to give both the title and the application note number. Addresses and phone numbers are listed in the Manufacturers and Distributors Directory.

Category	Page
DIGITAL	
Arithmetic	352
CMOS	352
Consumer	356
Counters	356
Gallium Arsenide	357
General	357
High-Speed Logic	358
I^2L	359
LSI, General	359
Multiplexers	359
Pulse Handling	359
Signal Processing	359
TTL, General	360
Trigger Circuits	361
MICROPROCESSOR	
Applications	363
General	368
I/O	370
Programming	373
Systems	376
MICROCOMPUTER BOARDS	
Applications	385
INTERFACE	
Converters	386
Data Acquisition Systems	394
Data Transmission	394
Drivers	397
Encoders	399
Error Correction and Detection	400
MOS/Bipolar	400
Multiplexers	401
Switches	401
LINEAR	
Active Filters	404
Amplifiers, Current	404
Amplifiers, Instrumentation	404
Amplifiers, Isolation	404
Amplifiers, Operational	404
Amplifiers, Power	409
Amplifiers, Preamplifier	409
Amplifiers, RF	409
Amplifiers, Special Purpose	409
Amplifiers, Video	410
Arrays	410
Communications	410
Comparators	414
Consumer, AM/FM	414
Consumer, Audio	416
Consumer, TV	416
Current Sources	418
Displays	418
Followers	418
General	418
Industrial Control	420
Instrumentation	421
Modulators	421
Motor Control	422
Multipliers	422
Phase-Locked Loops	422
Photosensitive Devices	423
Power Control	424
Power Supplies	425
Rectifiers	426
Regulators	426
Speech	428
Telecommunications	428
Thermal Considerations	428
Timers	428
Transducers	429
Video	430
Voltage References	430
MEMORY	
Analog	431
Bubble Memories	431
Character Generators	431
Controllers	431
E^2PROMs	432
FIFOs/LIFOs	435
General	435
Microprogramming	436
PROMs	436
RAMs	437
ROMs	441
Shift Registers	442
CUSTOM/SEMICUSTOM	
Gate Arrays	444
General	444
Linear and Linear/Digital Arrays	444
Programmable Logic	444
Standard Cells	445
PACKAGING	
General	446

DIGITAL

Arithmetic

1 **"A 22-Bit Floating Point Registered Arithmetic Logic Unit"**
Preliminary information on a 6 MHz registered ALU able to store, retrieve, add, subtract, and normalize floating point numbers.
TRW LSI (4pp)

2 **"A Four-Cycle Butterfly Arithmetic Architecture"**
Explains the background of the FFT and the computational element called the butterfly. A block diagram of the FFT processor is presented and the DAU (data arithmetic unit) architecture is described in detail. The text's description of the four FFT instructions are supplemented by computational diagrams, block diagrams, a data flow chart and a timing diagram.
TRW/LSI

3 **"A Single-Board Floating Point Signal Processor"**
(TDC1022, TDC1033, TDC1042)
Describes a finite impulse response filter built from a family of floating point devices.
TRW LSI TP24 (6pp)

4 **"AM25S10 Four-Bit Shifter"**
(AM25S10)
Provides functional description and discusses logic equivalents. Applications: up-shift, down and around end shifts, scaling and fixed multiplication.
Advanced Micro Devices (10pp)

5 **"Applications of the TTL/MSI 93S43 4-Bit by 2-Bit Two's Complement Multiplier"**
(93S43)
Describes how to implement a combinatorial multiplication array of any size for two's complement numbers. Shows how to multiply in other number representations. Discusses speed/hardware tradeoffs, normalization of floating point numbers after multiplying, rounding or truncation of double length products.
Fairchild AN-329 (15pp)

6 **"Arithmetic Arrays Using Standard COS/MOS Building Blocks"**
(CD4001, CD4008, CD4011, CD4013, CD4019)
Describes design of a 32-bit full adder/arithmetic logic system. Discusses a four-bit full adder, quad AND-OR select gate, dual D-type flip-flop, input NAND geat, input NOR gate, and an arithmetic register.
RCA ICAN-6600 (6pp)

7 **"COS/MOS Rate Multipliers—Versatile Circuits for Synthesizing Digital Functions"**
(CD4089, CD4527)
Describes operation of a rate multiplier, and the effects of cascading. Covers addition, subtraction, multiplication, division, square and higher order roots, frequency ratios and integration. Also discusses symmetric operations.
RCA ICAN-6739 (12pp)

"Fast Multipliers Using TTL Read Only Memories"
See listing under (Memory) ROMs. (Texas Instruments)

8 **"Floating Point Multiplier"**
Explains how to implement a 24-bit floating point multiplier using one MPY-12HJ multiplier and other devices.
TRW/LSI

Arithmetic (cont)

9 **"High-Speed TTL Adders"**
(DM5483, DM7483)
Describes 16-bit parallel adders, using the DM7283/DM8383, and connections for ripple-carry addition. Also describes BCD adder techniques implemented with these devices. Shows how the devices can be used to improve the performance of MOS storage systems.
National AN-35 (6pp)

10 **"Introducing and Applying the 8x8 CMOS/SOS Multiplier, GP503"**
(GP503)
Provides a detailed description of an asynchronous, 8 x 8-bit expandable multiplier that can be interfaced as an I/O device to most parallel-bus-driven CPU systems.
RCA ICAN-7211 (7pp)

11 **"LSI Multipliers Application Notes"**
Describes larger and smaller word multiplication, higher speed multiplication and division using multiplication.
TRW/LSI

"MECL 10,000 Arithmetic Elements MC10179, MC10180, MC10181"
See listing under (Digital) High Speed Logic (Motorola).

12 **"Multiplier-Accumulator Application Notes"**
Covers the use of multiplier-accumulators including an explanation of the clock, input and output controls. Other discussions include: larger word accumulations, multiplication plus a constant, operation with microprocessors, digital filters and complex multiplication.
TRW/LSI

13 **"NBCD Sign and Magnitude Adder/Subtracter"**
(MC14560, MC14561)
Describes CMOS parallel adder-subtracters for both signed and unsigned natural binary coded decimal (NBCD) numbers.
Motorola AN-738 (7pp)

CMOS

14 **"54C/74C Family Characteristics"**
(MM54C Series, MM74C Series)
Discusses output, noise and temperature characteristics, power consumption, and propagation delay for the 54C/74C logic family.
National CMOS Databook AN-90 (6pp)

"A 3½ Digit DVM Using an Integrated Circuit Dual Ramp System"
See listing under (Linear) Instrumentation (Motorola)

15 **"A COS/MOS PCM Telemetry and Remote Data Acquisition Design"**
(CD4000 Series)
Describes data transmission formats and the following data acquisition sections: analog and digital multiplexers, A/D converters, transmission formatters and system programmers.
RCA ICAN-6289 (12pp)

16 **"A Simplified Approach to Testing CMOS Inverters and Gates"**
Bench tests using a power supply and a V-O-M are described. They include continuity, input leakage, quiescent device current, output voltage, noise immunity, output drive current and threshold voltage.
Solid State Scientific AN-107 (4pp)

DIGITAL

CMOS (cont)

1 **"A Typical Data-Gathering & Processing System Using CD4000A-Series COS/MOS Parts"**
(CD4000 Series)
Describes data-gathering and processing system using CMOS circuits. Includes discussion of input signal conditioning and transmission, the digital processor unit, receiver, memory, arithmetic unit, display unit, output buffer, output transmitter, receiver, and control unit.
RCA ICAN-6210 (11pp)

2 **"AC Characteristics of MM54HC/MM74HC High-Speed CMOS"**
(MM54/74HCXXX)
Even though HC-CMOS logic has speeds similar to LSTTL, there are differences in how this family's speeds are specified. This note discusses how the various measurements of timing parameters are carried out for the HC-CMOS family.
National Semiconductor AN-317 (6pp)

3 **"AC Characteristics of the V54/74ACT Interface Family"**
(V54/74ACT)
Discusses the impact on performance of variations in temperature, power supply, external capacitive loading, and rise, fall, setup, and hold times.
VTC Data Book and Applications Manual, Section 4 (9pp)

4 **"An Introduction to ISO-CMOS Technology"**
Describes the ISO-CMOS process, which offers the low power, high noise immunity, and wide power supply tolerance of CMOS; speeds comparable to those of low-power Schottky TTL; and high functional density.
Mitel Semiconductor MSAN-104 (6pp)

"Application of CD4016A Quad Bilateral Switch"
See "Transmission and Multiplexing of Analog or Digital Signals Using the CD4016A Quad Bilateral Switch" Under (Interface) Data Transmission. (RCA)

5 **"Application of the RCA-CD4093B COS/MOS Schmitt Trigger"**
(CD4093B)
Describes characteristics of the CD4093 quad 2-input Schmitt trigger. Covers applications in waveshaping (sinewave to squarewave, edge delay, edge detection), power-on reset, astable multivibrators and use as a Schmitt trigger for noise immunity.
RCA ICAN-6346 (6pp)

6 **"Applications of CD40107BE COS/MOS Dual Buffer"**
(CD40107BE)
Describes the characteristics of the CD40107BE and applications including a lamp driver, an LED driver, and a relay driver.
RCA ICAN-6564

7 **"Applications of CMOS Integrated Circuits in Communications Equipment"**
(SCL4000 Series)
Uses of SCL4000 Series circuits as frequency synthesizers, digital frequency displays, frequency scanners, and squelch circuits.
Sprague Solid State AN-108 (4pp)

CMOS (cont)

8 **"Astable and Monostable Oscillators using RCA COS/MOS Digital Integrated Circuits"**
(CD4000 Series)
Describes several techniques used to compensate for the normal threshold variation of MOS devices in the design of stable multivibrator circuits for operation at frequencies up to 1 MHz. Also covers applications for multivibrator circuits including VCOs, voltage controlled pulse-width circuits, and phase-locked VCOs.
RCA ICAN-6267

9 **"Battery-Powered Digital-Display Clock/Timer and Metering Applications Utilizing the RCA CD4026A and CD4033A Decade Counters 7-Segment Output Types"**
(CD4009, CD4010, CD4026, CD4033)
Describes the CD4026A/33A ICs and their use with 7-segment display units. Discusses interface packages and methods to help the designer optimize his system. Includes a discussion of battery-operated systems for digital clocks and watches.
RCA ICAN-6733 (16pp)

10 **"CMOS Analog Multiplexers and Switches; Applications, Considerations"**
Covers selection criteria, parameter definitions, handling and design precautions, typical applications, and other topics concerning CMOS analog multiplexers and switches.
Harris Semiconductor AN-520 (9pp)

11 **"CMOS Databook"**
Primarily contains data sheets, but also includes the following application notes individually described elsewhere: AN-77, 88, 90, 118, 138, 140, 177, 200; DB-5, and MB-18.
National Semiconductor $6

12 **"CMOS Expandable Gates"**
(SCL4402A, SCL4412A)
Compares the transfer characteristics of ordinary CMOS gates to those gates using double buffered output. Includes performance characteristics and discusses expansion of SCL4412A and SCL4402A to 12-input NOR, 16-input OR, and other combinations.
Sprague Solid State AN-102 (3pp)

13 **"CMOS Linear Applications"**
(MM74C00, MM74C02, MM74C04)
Describes use of CMOS devices biased to operate at the midpoint of the transfer characteristics.
National CMOS Databook AN-88 (3pp)

14 **"CMOS Oscillators"**
Describes square wave oscillators that can be built with CMOS logic elements.
National CMOS Databook AN-118 (4pp)

15 **"CMOS Wave Shaping and Level Detection"**
Describes methods to obtain modified transfer characteristics of double buffered NAND gates, by connecting inputs together, connecting extra inputs to Vcc, etc. Shows how to obtain variable amounts of hysteresis, and describes systems of level detection using trigger circuits.
Sprague Solid State AN-109 (5pp)

16 **"CMOS, the Ideal Logic Family"**
Talks about the characteristics of CMOS logic. Describes system considerations, interfacing to other logic types, and timing considerations.
National CMOS Databook AN-77 (7pp)

"CMOS/MOS Interfacing Simplified"
See listing under (Interface) MOS/Bipolar (RCA)

"CMOS/MOS Rate Multipliers—Versatile Circuits for Synthesizing Digital Functions"
See listing under (Digital) Arithmetic (RCA)

DIGITAL

CMOS (cont)

1 **"COS/MOS Electrostatic-Discharge Protection Networks"**
(CD4000 Series)
Discussion and illustrations of the various electrostatic-discharge protection networks provided on RCA CMOS parts.
RCA ICAN-6572 (2pp)

2 **"COS/MOS Integrated Circuits Manual"**
(CD4000 Series)
Discusses fabrication, logic system design, and applications of RCA COS/MOS circuits.
RCA CMS-272 $5.00 (168pp)

3 **"Characterization and Specification of the V54/74ACT Interface Family"**
(V54/74ACT)
Covers methods of testing V54/74ACT logic and explains how to design and use a universal test fixture to characterize the circuits.
VTC Data Book and Applications Manual, Section 6 (9pp)

4 **"Comparison of MM54HC/MM74HC to 54LS/74LS, 54S/74S and 54ALS/74ALS Logic"**
(MM54/74HCXXX, 54LS/74LSXXX)
The MM54/74HC family of high-speed logic provides a combination of speed and power characteristics that is not duplicated by bipolar logic families or any other CMOS family. This note compares the electrical and speed characteristics of these families.
National Semiconductor AN-319 (6pp)

5 **"Comparison of the V54/74ACT to 54/74LS, 54/74S, and 54/74ALS Interface Families"**
(V54/74ACT, 54/74LS, 54/74S, 54/74ALS)
A detailed comparison of logic families.
VTC Data Book and Applications Manual, Section 8 (8pp)

6 **"DC Characteristics of the V54/74ACT Interface Family"**
(V54/74ACT)
Compares DC characteristics of the V54/74ACT ICs with those of other logic families, covering data sheet specifications, input and output characteristics, and power supply voltage and quiescent currents.
VTC Data Book and Applications Manual, Section 5 (8pp)

7 **"Design Case: VME Backplane Drive Circuitry"**
(V54/74ACT)
Gives specifics of the use of V54/74ACT parts as VME bus drivers, illustrating their power advantage over ALS parts for the application.
VTC Data Book and Applications Manual, Section 2 (7pp)

"Design of Fixed and Programmable Counters Using the RCA 4018A COS/MOS Presettable Divide-by-"N" Counter"
See listing under (Digital) Counters. (RCA)

8 **"Designing with MM74C908, MM74C918 Dual High Voltage CMOS Drivers"**
(MM74C908, MM74C918)
Presents curves for power dissipation design limits. Shows simple driver circuits plus flasher, oscillator, siren and latch applications.
National CMOS Databook AN-177 (12pp)

9 **"ESD and Latchup"**
(V54/74ACT)
A discussion of the latchup and electrostatic discharge protection circuitry incorporated into V54/74ACT parts.
VTC Data Book and Applications Manual, Section 7 (6pp)

CMOS (cont)

10 **"Follow PC-Board Design Guidelines for Lowest CMOS EMI Radiation"**
(54HC/74HC)
The application of high-speed CMOS logic circuits, such as 54HC/74HC, requires special attention to circuitboard design to minimize conducted and radiated noise. This note describes empirical and analytical techniques for effective EMI control.
National Semiconductor AN-399 (8pp)

11 **"Fundamentals of Testing COS/MOS Integrated Circuits"**
Describes the techniques employed in testing CMOS devices to assure their adherence to data sheet specs.
RCA ICAN-6532 (14pp)

12 **"Getting the Most Out of CMOS Devices for Analog Switching Jobs"**
Describes latch-proof junction isolation, floating-body junction isolation, and dielectric isolation as solutions to CMOS problems when applied to analog design.
Harris Semiconductor AN-521 (7pp)

13 **"Guide to Better Handling and Operations of CMOS Integrated Circuits"**
Recommends specific handling and operating practices to minimize the probability of damage in manufacturing and field environments.
RCA ICAN-6525 (5pp)

14 **"HD-6440 Applications in Multiplexed Bus Systems"**
(HD6640)
Explains the advantages of the HD-6440 CMOS decoder/driver's internal latching of address inputs.
Harris TB-33 (5pp)

15 **"High-Speed CMOS (MM54HC/MM74HC) Processing"**
(MM54HC/MM74HC)
Discusses the advantages of polycrystalline silicon-gate CMOS over metal-gate CMOS. The higher speed is achieved because parasitic capacitances are reduced and transistor gains are increased.
National Semiconductor AN-310 (8pp)

16 **"Improved CMOS Gate Design"**
(SCL4000 Series)
Description of the output buffering of the SCL4000 Series.
Sprague Solid State AN-105 (3pp)

17 **"Interfacing Analog and Digital Displays with CMOS Integrated Circuits"**
(CD4000 Series)
Details some of the CMOS ICs most suitable for interfacing the electronic circuit and the display. For digital displays, basic display operation is also covered as an aid in selecting the appropriate interfacing device.
RCA ICAN-6595 (12pp)

18 **"Interfacing COS/MOS with Other Logic Families"**
(CD4000A Series)
Describes conditions governing interface of CMOS 4000A series with other logic families.
RCA ICAN-6602 (12pp)

19 **"Interfacing to MM54HC/MM74HC High-Speed CMOS Logic"**
(MM54/74HCXXX)
Describes techniques for interfacing MM54/74HC high-speed CMOS devices to other types of logic or to other control circuits.
National Semiconductor AN-314 (10pp)

DIGITAL

CMOS (cont)

1 **"Interfacing with CMOS"**
Describes the electrical characteristics of CMOS inputs and outputs. Discusses interfacing CMOS with CMOS, PMOS, NMOS, DTL/TTL, HTL, and ECL.
Sprague Solid State AN-104 (5pp)

2 **"Introduction to CMOS Integrated Circuits with Three-State Outputs"**
Describes a wide variety of CMOS ICs incorporating transmission gates with standard logic. Gives design rules. Covers applications in analog switching and multiplexing, digital multiplexing, and data bussing.
Motorola AN-715 (19pp)

"MM54C/74C Voltage Translation/Buffering"
See listing under Interface (National)

"NBCD Sign and Magnitude Adder/Subtracter"
See listing under Arithmetic (Motorola)

3 **"National's Process Enhancements Eliminate the CMOS SCR Latch-Up Problem in 54HC/74HC Logic"**
(54/74HCXXX)
Discusses several layout and process enhancements that have eliminated the SCR latch-up problem in National's 54/74HC logic devices. Includes user system design solutions for preventing SCR latch-up in older CD4000 devices.
National Semiconductor AN-339 (8pp)

4 **"Noise Immunity Comparison of CMOS Versus Popular Bipolar Logic Families"**
Compares the noise immunities of TTL, DTL, HTL, and CMOS logic families. Discusses common noise sources, precautions against noise, noise specification, and standard noise tests.
Motorola AN-708A (8pp)

5 **"Noise Immunity of COS/MOS B-Series Integrated Circuits"**
(CD4000UB Series, CD4000B Series)
Evaluates noise immunity of B-Series CMOS devices with respect to noise-energy immunity, and dc/ac noise-immunity. Includes definitions of test terms, discussion of logic-system noise and rejection, and schematics.
RCA ICAN-6587 (9pp)

6 **"Noise Immunity of COS/MOS Integrated-Circuit Logic Gates"**
(CD4000A, CD4001A)
Evaluates noise immunity of the CD4000A/01A gates with respect to external noise, crosstalk, transmission-line reflections, power-line noise, and ground-line noise. Includes schematics and logic diagrams.
RCA ICAN-6176 (8pp)

7 **"Parallel Clocking of Sequential CMOS Devices"**
(CD4000A Series, CD4000B Series)
Shows how to avoid logic-state errors in cascaded CMOS devices by optimizing clock transition time.
RCA ICAN-6948 (2pp)

8 **"Power Dissipation for the V54/74ACT Interface Family"**
(V54/74ACT)
Complete information on the power consuming components of V54/74ACT parts.
VTC Data Book and Applications Manual, Section 3 (5pp)

9 **"Rad-Tolerant ICs are Available Off the Shelf"**
An introduction to the effects of radiation on ICs, radiation tolerance testing, and a family of rad-tolerant microprocessors, RAMs, and ROMs.
Harris CMOS Military

CMOS (cont)

10 **"Radiation Resistance of the COS/MOS CD4000A and CD4000B Series"**
(CD4000 Series)
Discusses the effects of permanent and transient radiation on CMOS devices.
RCA ICAN-6563 (3pp)

11 **"TSC426/427/428 System Design Practice"**
(TSC426, TSC427, TSC428)
Addresses system issues of power supply decoupling and stray lead inductance, critical for the application of high-speed CMOS circuits.
Teledyne Semiconductor AN-25 (4pp)

12 **"Transmission-Line Effects Influence High-Speed CMOS"**
(54HC/74HC)
Discusses the design precautions needed to minimize adverse transmission line effects with high-speed 54HC/74HC devices.
National Semiconductor AN-393 (6pp)

13 **"Understanding Buffered and Unbuffered CMOS Characteristics"**
Presents the relative merits of buffered and unbuffered CMOS devices. Provides background, definitions, and an applications chart.
RCA ICAN-6558 (8pp)

14 **"Understanding CMOS"**
Programmed text covers basic theory, construction, and characteristics of COS/MOS digital integrated circuits. Describes RCA COS/MOS circuits, packaging, specifications, and design factors. Programmed instruction format enables a reader to learn at his own pace.
RCA CPI-279 (80pp) $2.00

15 **"Understanding and Eliminating Latch-Up in CMOS Applications"**
Reviewing the basic theory of SCR operation and its application to CMOS input and output structures, this note explains how design techniques can reduce the risk of latch-up occurences in CMOS analog and digital circuit designs.
Mitel Semiconductor MSAN-107 (16pp)

16 **"Using the CD4047A in COS/MOS Timing Applications"**
(CD4047)
Compares this monostable-astable multivibrator with simpler types of oscillator circuits and discusses applications, including a noise discriminator, low-pass and band-pass filters, a frequency discriminator, and a pulse generator.
RCA ICAN-6230 (13pp)

17 **"Using the CD4520B to Design Dividers with Symmetrical Outputs"**
(CD4520B)
Describes how to use this CMOS counter to divide an input frequency by N where N is any integer from 2 to 256 and obtain outputs with approximately 50% duty cycles.
RCA ICAN-6362 (10pp)

18 **"Using the SCL 4528 Dual Monostable Multivibrator"**
(SCL4528)
Describes operating modes and timing, equations for pulse width calculations.
Solid State Scientific AN-111 (6pp)

DIGITAL

Consumer

1 **"Calculator Learns to Keep Time"**
Describes stopwatch and keyboard controlled interval timing functions using the MM5736 calculator chip.
National MOS/LSI Databook AN-119 (8pp)

2 **"Handheld Calculator Battery Systems"**
Describes the tradeoffs in battery performance for 6.5 to 9.5v calculators driven by 2, 3 and 4 cell as well as 9v. batteries.
National MOS/LSI Databook AN-149 (4pp)

"High Voltage Shift Registers Move Displays"
See listing under (Memory) Shift Registers (National)

3 **"Keyless Lock Circuit"**
(LS7220)
Describes device operation and implementation in a digital lock.
LSI Computer Systems (6pp)

4 **"Timekeeping Advances Through COS/MOS Technology"**
Discusses basic oscillator design considerations, practical oscillator circuits, and some typical timing-circuit applications, including wrist watches, wall clocks, and auto clocks.
RCA ICAN-6086 (12pp)

5 **"Universal Count/Display Circuit"**
(ZN1040AE)
Examines range of applications for a 4-decade up/down counter with BCD and seven-segment outputs. Covers external circuit connections and component values for zero suppression, blanking, decimal-point input, lamp test, and common anode or common cathode LED displays.
Ferranti (23pp)

6 **"Using Standard National Calculators in Industrial and Microprocessor Applications"**
Discusses keybounce and noise rejection, ready signal operation, and zero suppression as they pertain to using calculator circuits in applications.
National MOS/LSI Databook AN-176 (4pp)

Counters

7 **"A 200 MHz Autoranging MECL-McMOS Frequency Counter"**
(MC10000 Series)
Presents basic frequency counter design along with the schematics and diagrams needed to build a 200 MHz autoranging frequency counter.
Motorola AN-742 (11pp)

8 **"A BASIC Program to Configure the CD4059A Programmable Divide-by-N Counter"**
(CD4059A)
Presents a BASIC program to assist the designer in configuring the Jam and Mode input pins of the CD4059A for a desired divide-by-N. A program flow chart and sample output are included.
RCA ICAN-7228 (5pp)

9 **"A Basic Selection Guide to Digital Counters"**
(CD4017, CD4024, CD4518)
Discusses the advantages of the binary ripple counter and compares it with the Johnson decade counter and the BCD counter. Also covers selection of the most suitable counter for specific applications.
RCA ICAN-6552 (6pp)

Counters (cont)

"An MSI 500 MHz Frequency Counter Using MECL and MTTL"
See listing under (Digital) High Speed Logic. (Motorola)

10 **"Applications Using the MK50395 Six Decade Counter Display Totalizer"**
(MK50395, MK50396, MK50397)
Discusses use of the counter in batch control position measurement, greater-than less-than detection, automatic stop, frequency counter, darkroom timer, digital tuning, and N-Pulser applications.
Mostek (16pp)

11 **"Battery-Powered 5 MHz Frequency Counter"**
Describes a battery operated 5 MHz counter built with CMOS for low power operation. Discusses methods to minimize power consumption.
Motorola AN-717 (9pp)

12 **"Calculator Chip Makes A Counter"**
(MM5736, MM5739)
Discusses use of the MM5736 calculator chip as a counter operating up to 120 Hz.
National MOS/LSI Databook AN-112 (6pp)

13 **"Design of Fixed and Programmable Counters Using the RCA 4018A COS/MOS Presettable Divide-by-"N" Counter"**
(CD4018)
Describes the use of this device in single-decade and multi-decade fixed and programmable divide-by-"N" counters. System considerations, such as switch simplifications, component minimization, and speed are also discussed.
RCA ICAN-6498 (6pp)

14 **"Five Digit Accumulator/Elapsed Time Indicator"**
(MC14534)
Describes in detail the circuit for a CMOS 5 digit elapsed time indicator and a 99,999 count accumulator with a 1-999 prescaler.
Motorola AN-743 (5pp)

15 **"Keyboard Programmable Divide-by-"N" Counter with Symmetrical Output"**
(MM54C922, MM74C922)
Describes a circuit to divide by 1 through 16 by pushing a single key for each division ratio.
National DB-5 (2pp)

16 **"New CMOS Counting Functions for Real-Time Applications"**
(CDP1878, CDP1879)
This note describes the CDP1878 dual counter-timer; and the CDP1879 real-time clock, a device offering control features, clock generation, and "wall clock" time. Compatible with many general-purpose CPUs, both devices can operate in memory-mapped and I/O modes of CDP1800 Series microprocessors.
RCA ICAN-7116 (11pp)

17 **"Using the 'AS867 and 'AS869 8-Bit Counters"**
(SN54AS867, SN74ASA87, SN54AS869, SN75AS869)
Describes of how to cascade these 40 to 50 MHz counters with carry look-ahead, program for modulo N applications, and interface with bused systems.
Texas Instruments AR-SDAA002 (8pp)

DIGITAL

Counters (cont)

1 **"Using the MK5009P MOS Counter Time-Base Circuit"**
(MK5009)
Describes the use of the MK5009 along with complete circuits for a digital frequency meter, pulse generator and digitally-programmable one-shot. Discusses operation of the units oscillator circuit.
Mostek AN-104 (4pp)

2 **"Using the SN74160 Family of Synchronous Counters"**
(SN74160, SN74161, SN74162, SN74163)
Describes carry circuit operation, cascading and programming.
Texas Instruments Application Report CA-174 (7pp)

Gallium Arsenide

3 **"Capacitor Diode FET Logic Circuit Approach for GaAs D-MESFET ICs"**
Describes a new circuit design approach for GaAs depletion-mode MESFET digital ICs (capacitor diode-coupled FET logic) that yields 3-GHz clock rates and 100-picosecond rise and fall times.
Gigabit Logic AR-5 (6pp)

4 **"Packages for Ultrahigh-Speed GaAs ICs"**
Describes two 36-pin chip-carrier packages for GaAs ICs.
Gigabit Logic AR-3 (4pp)

5 **"The Operation and Application of PicoLogic GaAs Integrated Circuits"**
Provides a guide to the operation and use of GaAs integrated circuits. Focuses on power supply and application of PicoLogic's unique input-logic switching circuits, and output driver diode clamps.
GigaBit Logic AN-1 (12pp)

General

"Criteria for Choosing Resins and Evaluation Tests for Discrete and Integrated Power Devices in Plastic Packages"
See listing under (Linear) General (SGS-ATES)

6 **"Custom Bipolar Integrated Circuits for Automotive Applications"**
Provides overview of bipolar ICs for customized systems in automotive and other applications. Reviews a typical custom development cycle and examines tradeoffs with other approaches.
Sprague TP79-2 (8pp)

7 **"Digital Telephone-System Components - CODECs—and the μ and A Laws"**
Defines terminology associated with converting telephone systems from analog to digital operation; discusses design and operation of codecs as governed by μ and A laws.
RCA ICAN-6941 (7pp)

General (cont)

8 **"Economics of ISL Gate Arrays"**
(8A1200, 8A1260, 8A1542)
Describes manufacturing cost savings achievable by replacing standard 74-series logic with ISL gate arrays.
Signetics

9 **"HMOS Reliability"**
Describes HMOS technology and device operation. Presents failure mechanisms, reliability testing, and test results.
Intel RR-18 (9pp)

10 **"How Cost Effective Are Custom IC's?"**
(MONOCHIP)
Looks at the relative economies of discrete circuit designs versus semicustom IC's at various volume levels. Economic costs often not analyzed such as rework, supervisory overhead, inventory maintenance, quality assurance, purchasing and stocking costs are included.
Interdesign APN-5 (6pp)

11 **"Logic Design for CMOS and NMOS Monochips"**
(MONOCHIP)
Describes techniques for transforming breadboard logic into MONOCHIP compatible logic using equivalent gates. Uses the 4008 binary adder and 4516 up/down counter as examples.
Interdesign APN-14 (15pp)

12 **"MOS 100-Bit Word Generator"**
Describes how to build a 100-bit word generator using MOS ICs.
National MB-1 (2pp)

13 **"MOS Clock Savers"**
Design and use of MOS Clock-Drive Networks. Offers tips for saving power and lowering component costs.
National MB-5 (2pp)

14 **"Nonvolatile Logic Applications"**
(MN9102, MN9105, MN9106, MN9107, MN9108)
Provides theory and application of several MNOS ICs that combine logic and nonvolatile memory functions. Example applications include an elapsed-time indicator, last-program memory and decade counter.
Plessey (40pp)

15 **"Special Functions Databook"**
Primarily contains data sheets, but also includes the following application notes described elsewhere: AN-10, 13, 28, 33, 38, 48, 49, 63, 75, 76, 156, 159, 180, 215, 219, 221; MB-9, LB-2, 14, 17.
National Semiconductor $6

16 **"Touchcontrol Circuits for Capacitance Switching"**
Describes seven MOS ICs that interface with a capacitive keypad panel to form a nonmechanical switching system. Includes discussion on keyboard scanning, noise immunity, switch size, capacitance values, multiplexing, panel construction and output considerations.
American Microsystems Inc. (15pp)

17 **"Worst Case Design For Integrated Circuits"**
Discusses defining worse case conditions of an IC design parameter variations, breadboarding for verification of worse case conditions and parasitic effects.
Interdesign APN-2 (5pp)

DIGITAL

High Speed Logic

1 **"A High Speed FIFO Memory Using the MECL MC1143 Register File"**
(MCM10143)
Describes the required features of a high speed FIFO design. Different approaches are compared and a design is shown using the MC10143 Multiport Register File.
Motorola AN-730 (6pp)

2 **"An MSI 500 MHz Frequency Counter Using MECL and MTTL"**
(MECL)
Describes design of 8-digit LED readout counter using MECL III, 10,000 and TTL. Discusses two prescalers using MECL, two input amplifier designs, and a time-base controller for the counter's multiphase clock.
Motorola AN-581 (9pp)

"Bussing with MECL 10,000 Integrated Circuits"
See listing under (Interface) Data Transmission (Motorola)

3 **"Interconnection Techniques for Motorola's MECL 10,000 Series Emitter Coupled Logic"**
(MECL)
Describes some of the characteristics of high digital signal lines and gives wiring rules for MECL 10,000 circuits. Discusses p-c board interconnects, board-to-board interconnects, and includes wire-wrapping techniques.
Motorola AN-556 (22pp)

4 **"Interfacing with MECL 10,000 Integrated Circuits"**
(MC1650, MC1692, MC10115, MC10116, MC10124, MC10125, MC10128, MC10129, MC10216)
Discusses circuits to interface ECL with TTL, TTL and IBM busses, MOS, low level signals, and LEDs.
Motorola AN-720 (9pp)

5 **"M10800 MECL LSI Circuits are Designed for High-Performance Microprogrammed Processors"**
Describes individual family members and how they tie together in a system. Includes block diagrams of devices and an instruction set table for the processor.
Motorola AN-792 (12pp)

6 **"MECL Positive and Negative Logic"**
(MECL)
Describes equivalences between positive and negative ECL logic and provides guides for converting between them.
Motorola AN-567 (2pp)

7 **"System Design Considerations"**
(V54/74ACT)
Discusses a family of high-speed, low-power CMOS logic ICs and systems considerations of applying the parts.
VTC Data Book and Applications Manual, Section 1 (13pp)

8 **"The MC1600 Series MECL III Gates"**
(MC1660, MC1661, MC1662, MC1663, MC1664, MC1665)
Gives typical operating characteristics and explains the operation of various gates in the MECL III family. Describes recommended layout, breadboarding, and testing procedures.
Motorola AN-504 (14pp)

9 **"Understanding MECL 10,000 DC and AC Data Sheet Specifications"**
(MECL)
Discusses basic MECL 10,000 gate structure, transfer curve and dc levels. Covers specifications data sheet, including power supply drain current, high and low output voltages, propagation delay, rise and fall times, and toggle frequency.
Motorola AN-701 (7pp)

High-Speed Logic (cont)

10 **"Video Terminal Strips Down to 26 MOS/LSI Chips"**
Discusses the use of single or multiple chip sets to implement the functions of a smart video terminal—programmable I/O and counters, keyboard scanner and encoder, baud rate generator, memory and video timer and controller.
Standard Microsystems AR3-3 (4pp)

11 **"QMOS High Speed CMOS Logic"**
Discusses the design of astable multivibrators using high-speed CMOS integrated circuits, and multivibrator performance up to 10 MHz.
RCA ICAN-7337 (5pp)

12 **"An Introduction to and Comparison of 54HCT/74HCT TTI Compatible CMOS Logic"**
(54HCTXXX, 74HCTXXX)
Describes the HCT logic family with respect to speed versus propagation delay, noise margin tradeoffs, power consumption, and electrostatic discharge.
National Semiconductor AN368 (6pp)

13 **"High-Speed CMOS Demands Proper Decoupling Techniques"**
(82C82)
Explains the design precautions required to avoid the variations in power supply voltage levels that can cause undesirable changes in thresholds and operation of high-speed CMOS parts.
Harris TB-49 (4pp)

14 **"Interfacing FAST to Multiport Memories"**
Discusses applications of the FAST logic family to multi-port, or shared, memory circuits.
Signetics AN-204 (7pp)

15 **"Interfacing HC/HCT QMOS Logic with Other Families and Various Typs of Loads"**
Describes HC/HCT interfaces with LSTTL, CMOS CD4000B-series, NMOS, and ECL devices. Also treats interfaces with terminated buses, displays, and relay or stepping-motor coils.
RCA ICAN-7325 (8pp)

16 **"Modification of LSTTL Test Programs to Test HCT High-Speed-CMOS Logic ICs"**
Describes modifications required in test programs in switching from testing LSTTL devices to HC/HCT devices. The Teradyne J283 test system is used as a frame of reference, but the information given is applicable to most other test equipment.
RCA ICAN-7323 (4pp)

17 **"Power Consumption in QMOS High-Speed Logic"**
Discusses the causes of quiescent and dynamic power dissipation in HC and HCT devices. Presents formulas needed to compute power dissipation in these devices and gives sample calculations.
RCA ICAN-7315 (6pp)

18 **"Power Supply Distribution and Decoupling for QMOS High-Speed-Logic ICs"**
Switching transients generated on the ground and supply rails can dangerously reduce logic noise margin. This note focuses on power supply distribution and decoupling to reduce switching noise in HC/HCT devices.
RCA ICAN-7329 (2pp)

DIGITAL

High-Speed Logic (cont)

1 **"Replacing LSTTL with QMOS High-Speed Logic ICs"**
Compares the performance characteristics of the HC/HCT QMOS family with the LSTTL family. Also discusses precautions to take in driving coaxial cable and ribbon cable with HC/HCT devices.
RCA ICAN-7330 (6pp)

2 **"System Level Comparison of High Speed Technologies"**
Compares the system-level performance of silicon, GaAs, MESFET, HEMT and Josephson technologies for different computer architectures.
GigaBit Logic AR-4 (7pp)

3 **"Terminating F100K ECL Inputs"**
(F100K)
A guide to F100K input characteristics, giving schematics for HIGH termination, utilizing unused gates to terminate multiple HIGHs and LOWs, and pull-up circuits.
Fairchild MHSL-3 (2pp)

4 **"Testing and Specifying FAST Logic"**
Describes the way FAST logic parts are specified, why they are specified in the way they are, and how their performance may be tested in the qualification lab and at incoming inspection.
Signetics AN-202 (6pp)

5 **"Using FAST Logic Functions in Microprocessor Systems"**
The FAST family of oxide-isolated TTL has addressed the problems of interfacing high-performance microprocessors to the rest of the system. This note describes many devices in the FAST family, including octal functions that combine simple buffers and transceivers with other more complex functions such as error detection and correction, specialized memory control circuits, and dual-bus data transfer circuits.
Signetics AN-201 (6pp)

6 **"Using FAST Logic Functions in Microprocessor Systems"**
(74FXX, 74SXX, 74LSXX)
An introduction to FAST oxide-isolated TTL logic devices, including octal buffers and transceivers, octal latches, and error detection/correction chips. Emphasis is on their use in microprocessor systems.
Signetics AN-201 (7pp)

I^{2}L

7 **"Injection Current Sources"**
Describes isoplanar integrated injection logic and its need for an injection current source and gives several source circuits.
Fairchild MC-1 (4pp)

8 **"Custom IC Design Using I^{2}L Technology"**
(XR-IIL-CHIP)
Compares I^{2}L to other technologies. Describes design procedure for linear and digital circuits using master chips.
Exar (5pp)

9 **"Digital Display Systems"**
Discusses decoding, format, multiplexing, zero suppression for LED, LCD, incandescent, fluorescent and gas discharge displays.
Fairchild AN-212/2 (24pp)

I^{2}L (cont)

10 **"Monolithic I^{2}L Test Circuit Using XR-C409"**
(XR-C409)
A monolithic test circuit has been developed for evaluation of speed and performance capabilities of Exar's (I^{2}L technology. This test circuit, designated the XR-C409, is intended to familiarize the I^{2}L user and the system designer with some of the performance features of I^{2}L such as its frequency capability and power-speed tradeoffs.
Exar AN-17 (4pp)

LSI, General

11 **"Semi-Custom LSI Design with I^{2}L Gate Arrays Using XR300 and XR500"**
A design approach to developing complex LSI systems using the devices is described.
Exar AN-16 (6pp)

Multiplexers

12 **"TTL MSI Multiplexers and Demultiplexers"**
(DM7210, DM7842, DM8210, DM8842)
Describes features of DM7210 multiplexer and DM7842 demultiplexer and discusses their use in a synchronous digital data transmission system, a keyboard entry decoder, and as minterm generators.
National AN-37 (8pp)

Pulse Handling

13 **"Nanosecond Pulse Handling Techniques in I/C Interconnections"**
Discusses problems of pulse transmission and measurement for TEM mode on coax, stripline, and above-ground wire systems.
Motorola AN-270 (6pp)

Signal Processing

14 **"A Guide to the Use of the TDC1028: A Digital Filter Building Block"**
(TDC1028)
Gives details on the design of a finite impulse response digital filter, covering such topics as signal data word size, filter length, and coefficient and data word expansion.
TRW LSI TP-22 (10pp)

15 **"A Single Board Floating Point Signal Processor"**
(TDC1022, TDC1033, TDC1042)
Describes the realization of a finite impulse response (FIR) filter using a family of floating point devices.
TRW LSI Products TP-24

16 **"An LSI Approach to Digital Signal Processing Enhances Telemetry Systems"**
Examines the impact of LSI building block hardware on telemetry systems, focusing on digital filtering and spectrum analysis.

Signal Processing (cont)

1 **"Components for Instruments that Employ Digital Signal Processing Techniques"**
Discusses A/D converters as they are used in digital instruments, reviews "flash" A/D technology, and outlines future directions of A/D design.
TRW LSI Products TP-27

2 **"Correlation—A Powerful Technique for Digital Signal Processing"**
Electronic systems that perform correlation are generally bulky and inefficient. This note describes a new LSI chip that enables correlation to be performed with a minimum number of components.
TRW LSI Products TP-17

3 **"Floating Point Hardware for Digital Signal Processing"**
Describes several VLSI chips that reduce the number of components and cost of high-speed, wide-dynamic-range DSP circuits. Discusses chip architecture and applications.
TRW LSI Products TP-25

4 **"2920 Analog Signal Processor Design Handbook"**
(2920)
Through background review and design examples, explains how analog signal processing can be performed with digital signal processing techniques.
Intel (128pp) $7.50

5 **"A Floating Point ALU for Digital Signal Processing"**
(TDC1022)
A brief guide to the operation and application of the TDC1022, a 22-bit VLSI floating point arithmetic unit for digital signal processing.
TRW LSI TP28 (4pp)

6 **"An Introduction to Two Different Finite Impulse Response Structures"**
Discusses an efficient alternative to the tapped delay line implementation of FIR filters.
TRW LSI TP-31 (5pp)

7 **"An LSI Digital Signal Processor for Airborne Applications"**
Discusses the background of digital signal processing with emphasis on radar processors. Described is a digital signal processing board, employing a multiplier-accumulator IC, that includes the basic processor, address generators, controller and system interface.
TRW/LSI

8 **"Bipolar VLSI for High Performance Digital Signal Processing"**
Explains the triple diffusion process used by TRW LSI Products to produce multipliers and multiplier-accumulators. Also included are multiplier configurations for recursive and non-recursive filters and FFTs.
TRW/LSI

9 **"Digital Signal Processing for Radar Systems"**
Shows how VLSI multipliers and multiplier-accumulators can be used in a radar signal processor to achieve: data rate reduction, by means of predictive mechanization; pulse compression, utilizing an FIR matched filter; maximum computational capabilities, via pipelining; high speed convolution, using 2-point DFTs and a complete FFT processor.
TRW/LSI

Signal Processing (cont)

10 **"Floating Point: The Second Generation for Digital Signal Processing"**
(TDC1022, TDC1042, TDC1033)
Discusses the significance of 22-bit floating point ICs for digital signal processing applications, describing an arithmetic unit, multiplier, and registered ALU.
TRW LSI TP26 (7pp)

11 **"General Purpose Format Speech Synthesizer Module Using the Intel 2920 Signal Processor"**
(2920)
Describes phoneme-based speech synthesizer design using the 2920 signal processor.
Intel AP-111 (24pp)

12 **"Hardware Development for a General Purpose Digital Filter Computing Machine"**
Describes the architecture and design of the arithmetic logic unit (ALU) for a digital filter computing machine. The computer control unit (CCU) required to drive the ALU is also explained; the CCU receives user-programmed instructions, interprets them and directs the ALU to perform the appropriate computations.
TRW/LSI

13 **"High-Speed Servo Control with the 2920 Signal Processor"**
(2920)
Describes techniques and principles associated with digital (vs. analog) control system design; includes detailed application examples.
Intel AP-124 (40pp)

14 **"Introduction to the Z-Transform and its Derivation"**
A tutorial discussion of LaPlace and Z-transforms and their use in sampled data systems. Application of the Z-transform to filter synthesis is also treated.
TRW/LSI

15 **"Second Order Recursive Digital Filter Design with the TRW Multiplier-Accumulators"**
Develops the fundamental concepts for second order recursive digital filters and describes some efficient hardware implementations using the TDC1010J multiplier-accumulator.
TRW/LSI

16 **"Using the 2920 Signal Processor in Modem Applications"**
Discusses modem design using digital signal processing techniques and detailed design examples for various modems.
Intel AP-117 (40pp)

TTL, General

17 **"54ALS/74ALS Schottky TTL Applications"**
Complete family characteristics and guidelines for system designs are provided.
Texas Instruments AR-B215 (40pp)

18 **"54ALS/74ALS Schottky TTL applications"**
(54/74ALS Series)
Describes applications of the 54ALS/74ALS Series. Includes discussion of fanouts, transfer characteristics, I/O parameters, speed/power data, and noise margins.
Texas Instruments B215 (40pp)

DIGITAL

TTL, General (cont)

1 **"Characteristics and Applications of Tri-State IC's"**
(DM7093, DM7490, DM7214, DM7230, DM7551, DM7598, DS7831, DS8831)
Describes application of the general configuration of the Tri-State logic family and discusses application of the following: quad bus-buffer gates, dual 4:1 multiplexer, demultiplexer and bus-interchange switch, quad-D flip-flop, expandable 256-bit ROM, and quad driver.
National AN-45 (12pp)

2 **"Digital Phase-Locked Loop Design Using SN54/74LS297"**
(SN54LS297, SN74LS297)
The SN54/74LS297 provides three of the four elements required to implement a phase-locked loop design: a phase detector, K counter, and increment/decrement counter. This note describes how the all-digital design eliminates the need for A/D and D/A conversion and the adverse effects of temperature and supply voltage variations.
Texas Instruments SCA-206A (28pp)

3 **"Digital Phase-Locked Loop Design Using SN54/74LS297"**
(SN74LS297, SN54LS297)
Describes the operation and typical applications of digital phase-locked loop design.
Texas Instruments AR-SCA-206A (28pp)

4 **"Metastable Characteristics"**
The metastable characteristics of a flipflop used for data synchronization can greatly affect system reliability. This report helps the system designer decide what type flip-flop to use and what its metastable characteristics will be.
Texas Instruments SDAA004 (4pp)

5 **"Microprocessor—GPIB Interfacing with the 96LS488"**
(96LS488)
Shows how to interface instruments and system components that talk, listen or talk and listen in accordance with the IEEE-488 standard for programmable instrumentation. Sample applications demonstrate use with various microprocessors.
Fairchild Application Note 351 (24pp)

6 **"Post Molded Leaded Chip Carrier"**
(74LS245)
Describes the advantages of chip carriers over dual in-line packages in terms of real estate savings and reduced manufacturing costs.
Texas Instruments SSYA001 (4pp)

7 **"TTL Integrated Circuits—Applications of MSI Devices"**
Covers counters, modulo-N dividers, decoders, switches, adders, comparators, parity generators, shift registers and bus-ORable flip-flop. Describes many applications, including up/down counters, a stepping waveform generator, shift registers, frequency synthesizers, digital data demultiplexer, analog commutator, minterm generator, ripple carry parallel adder and tape position locator.
National AN-36 (23pp)

8 **"TTL/MSI 9334 8-Bit Addressable Latch"**
(9334)
Describes operation and application, including 16 and 32-bit addressable latches, 16-word by 4-bit memory, demultiplexer and decoder, 8-bit A/D converter and a 16-bit serial-to-parallel converter.
Fairchild Application Note 220 (8pp)

TTL, General (cont)

9 **"Tri-State Logic Applied in a Computer System Can Reduce System Cost and Provide Added Performance"**
(DM8556)
Analyzes Tri-State characteristics using the DM8556 counter/register as an example. Shows how performance of PDP-8 can be improved using TSL.
National AN-73 (7pp)

10 **"Tri-State Logic in High Speed Memories of Microprogrammed Computers"**
(DM8551)
Discusses tri-state logic in general and its use in scratchpad memories. Covers storage of microinstructions and program constants in high-speed ROMs.
National AN-47 (5pp)

11 **"Tri-State Logic in Modular Systems"**
(DS7831, DM8093, DM8094, DM8214, DM8230, DM8551, DM8552, DM8598, DS8831, DM8840, DM8842, DM8846)
Discusses output drive characteristics logical control, safety factors in Tri-State Logic circuits. Describes applications, including complex switching functions, driving and transmitting, multiplexing, data storage, decoding, and data manipulation.
National AN-43 (16pp)

Trigger Circuits

"1.3 Volt IC Flasher, Oscillator, Trigger, or Alarm"
See listing under (Linear) Timers (National)

12 **"CMOS Schmitt Triggers"**
(MC14093B, MC14583B, MC14584B)
Operating characteristics, theory of operation, and Schmitt trigger applications are covered for digital logic systems.
Motorola AN-768A (8pp)

13 **"CMOS Schmitt Trigger—a Uniquely Versatile Design Component"**
(MM54C14, MM74C14)
Analyzes CMOS Schmitt triggers and outlines applications including a light activated switch, an RC oscillator, and a pulse stretcher. Also outlines the benefits of hysteresis.
National MOS/LSI Databook AN-140 (6pp)

14 **"Designer's Encyclopedia of One-Shots"**
Difficulties in the application of bipolar monostable multivibrators are generally due to pulse width or triggering problems. This note presents an overview of one-shots and describes how they work and how to use them properly.
National Semiconductor AN-366 (30pp)

15 **"Designing with SN54/74LS123 Dual Retriggerable Monostable Multivibrators"**
(SN54LS123, SN74LS123)
Includes descriptions of device used in frequency discrimination, missing pulse detection, pulse width detection, frequency doubling.
Texas Instruments Application Report CA-196 (12pp)

16 **"IFL Programmable Retriggerable One Shot"**
Explains the implementation and operation of a programmable retriggerable one-shot using an FPLS82S159 and external clock.
Signetics AN-1 (6pp)

DIGITAL

Trigger Circuits (cont)

1 **"Latches and Flip-Flops with PLS153"**
(PLS153)
Explains how the simple AND, OR, and INVERT functions of the PLS153 can be used to implement memory functions such as latches and edge-triggered flip-flops without external wiring.
Signetics AN-14 (13pp)

2 **"PLD Programmable Retriggerable One-Shot"**
(PLS159)
Details on the construction and operation of a programmable, retriggerable one-shot circuit consisting of a PLS159 and external clock.
Signetics AN-11 (4pp)

Trigger Circuits (cont)

3 **"Schmitt Triggers and Multivibrators"**
(MONOCHIP)
Discusses implementation of Schmitt triggers and multivibrators on an NMOS gate array. Presents design considerations and electrical characteristics for both at 5 and 12 V.
Interdesign APN-13 (7pp)

"Using the CMOS Dual Monostable Multivibrator"
(MM54C221, MM74C221)
Discusses device theory, accuracy, and diagrams typical applications including oscillator circuits, a frequency magnitude comparator, and a linear VCO.
National CMOS Databook AN-138 (6pp)

MICROPROCESSOR

Applications

1 **"Designing with the Microprogram Sequencer GP502"**
(GP502)
The GP502 is an address sequencer designed to control the execution sequence of microinstructions stored in a microprogram memory. This note describes the system architecture and operation, and discusses the use of the GP502 in designing a 16-bit microprogrammable bit slice microcomputer.
RCA ICAN-7327 (28pp)

2 **"Keyless Entry System Using the CDP6805F2 8-Bit Microcomputer Unit"**
(CDP6805F2)
Describes a keyless entry system in which a dedicated CDP6805F2 MCU is used to execute a program that can control a larger configuration to form a secure entry system. Intended only as an aid in better understanding the CDP6805F2 and how it fits into a secure entry system.
RCA ICAN-7197 (10pp)

3 **"279X Application Note No. 1"**
(WD279X)
Describes 279X floppy disk controller design with 8080, 8085, and Z80 microprocessors. Includes timing charts and software examples.
Western Digital AN-1 (24pp)

4 **"279X Application Note No. 2"**
(WD279X)
Describes 279X floppy disk controller design with 6800, 6809, and 6502 microprocessors. Includes timing charts and software examples.
Western Digital AN-2 (22pp)

5 **"279X Application Note No. 3"**
(WD279X)
Describes 279X floppy disk controller design with 8086, Z8000 and 68000 microprocessors. Includes timing charts and software examples.
Western Digital AN-3 (26pp)

6 **"68047 Video Display Generator"**
(S68047)
Describes a low cost IC that provides a link between an MPU and a standard black and white or color television set. Includes software implementation.
Gould AMI AN796801 (12pp)

7 **"A Dual Processor System for Use in the EXORciser"**
Introduces dual processing and presents the design of a dual processor system for use in the EXORciser. In the system discussed, the μP's have control of a common bus on opposite phases of the clock.
Motorola AN-777 (13pp)

8 **"A Dual-Processor System Using Two MC6809E MPUs on a Common Bus"**
(MC6809E)
Provides a description of a dual-processor system in which two microprocessors control a common bus on alternate phases of the clock. Using two MC6809E processors, the system features a single bus structure, the use of common memory by both processors, and one clock generation circuit.
Motorola AN-892 (9pp)

9 **"A General Purpose Frequency Counter Using an M6805 HMOS/M146805 CMOS Family Microcomputer"**
(M6805, M146805)
Provides information for designing a general-purpose microcomputer-controlled frequency counter.
Motorola Semiconductor AN885 (6pp)

Applications (cont)

10 **"A Low Component Count Video Data Terminal Using the DP8350 CRT Controller and the INS8080 CPU"**
(DP8350, INS8080A, INS8250)
Describes a video data terminal system. Provides block diagrams and short descriptions of individual circuit elements as well as system schematic.
National Interface Databook AN-199 (10pp)

11 **"A Low Cost-MOS/LSI Based Smart CRT Terminal"**
(CRT5037, KR3600, ROM4732, CRT8002, COM8046, COM8251, 8085)
Presents design of a "smart" word editing CRT terminal with 29 IC's and programmable format.
Standard Microsystems AN3-1 (20pp)

12 **"A Low-Cost Regulator for Microprocessor Applications"**
(VN4000A)
Describes the construction of a 100 kHz multiple output switching regulator using two VN4000A MOSPOWER FETs.
Siliconix DA80-1 (11pp)

13 **"A Low-Cost Terminal Using the MC6801"**
(MC6801, MC6847, MC1372)
Provides instructions by using an unmodified television set as a monitor terminal by applying a microcomputer, a video display generator and an RF modulator. Includes wiring diagram, program flow chart and program listing.
Motorola AN-798A (21pp)

14 **"A Matrix Printer Controller Using the F8 and F3870 Circuits"**
(F8, F3870)
Describes the construction of a matrix printer controller using the devices. Includes software listings and diagrams.
Fairchild AN-340 (15pp)

15 **"A Radio Set Phase-Lock Loop (PLL) Using an MC6805T2()2 Single-Chip Microcomputer"**
(MC6805T2)
Discusses an application of the MC6805T2 in a system providing keypad tuning of a radio transmitter/receiver. Designed with PLL applications in mind, the chip has a 10-bit mask-programmable reference divider, 14-bit program-accessible divide-by-N register, and phase/frequency comparator.
Motorola AN-883 (42pp)

16 **"A Single Board Terminal Using the Z8690 Universal Peripheral Controller"**
(Z8590)
Describes the I/O part of a computer system in its most rudimentary form, and shows how a universal peripheral controller can be used to offload routine processing tasks from a CPU.
Zilog (23pp)

17 **"A Zero-Crossing Application for the M6805 HMOS Family"**
(MC6805, MC68705U3)
Zero-crossing circuits are typically used when a software time-of-day clock for real-time operating systems or events counting is required. This note gives several examples of zero-crossing detectors, discusses their advantages and disadvantages, and describes a triac controller application using an EPROM-equipped microcomputer.
Motorola Semiconductor AN 902 (16pp)

MICROPROCESSOR

Applications (cont)

1 **"An Application Adding Analog Input/Output to AIM 65 Microcomputer"**
(RM65-5303E)
This note gives an example of how to use an analog I/O module to interface an analog joystick to an AIM 65 microcomputer and provide visual feedback through a CRT display while controlling an X-Y plotter.
Rockwell AN-2171 (6pp)

2 **"An Expanded MC146805F2/G2 Emulator Using the MC146805E2 Microprocessor Unit"**
(MC146805E2, MC146805F2, MC146805G2)
Describes an expanded version of an emulator based on the stand-alone emulators described in Motorola Application Note AN-853. The board includes real-time emulation of the MC146805F2/G2 MCUs; optional on-board debug monitor; external download from EXORciser bus or through serial interfaces; and optional EPROM or static RAM for user program storage.
Motorola AN-884 (28pp)

3 **"An Interactive Graphic System Using the MC6809"**
(MC6809, MC6847, MC1372)
Details procedures for implementing cost-effective graphic displays on the video screen of a small business computer.
Motorola Semiconductor AN-825 (28pp)

4 **"An Introduction to Digital Spectrum Analysis including a High Speed FFT Processor Design"**
Describes the design of a high-speed FFT processor, particularly the architecture and address generation. Also included is an explanation of the use of bit-slice microprocessors as FFT sequencers.
TRW/LSI A-11

5 **"An R6500/1 Microcomputer-Based Printer Controller"**
(R6500/1)
Details the cost-effective application of the R6500/1 to printer control. Covers printer interface, drive, and timing, buffer management, and interrupt routines.
Rockwell No. 237 (55pp)

6 **"Analog-to-Digital Conversion Using the S2000 Family"**
(S2000)
Presents four a/d conversion schemes of varying complexity incorporating the device. Block diagrams are supplied.
Gould AMI AN-79-2K-10 (4pp)

7 **"Application Summary for the MC6805R2-1 Single-Chip Microcomputer"**
(MC6805R2-1)
Gives a detailed explanation and circuit diagrams of the five application modes in which the MC6805R2-1 may be operated (monitor mode, software serial loop, stand-alone A/D Converter, triac controller mode, and color organ mode). A complete program listing for the device is included.
Motorola Semiconductor AN-869 (50pp)

8 **"Automatic Multipoint Pressure Measurement"**
(INS8060)
Details design procedures for making a multipoint pressure measurement and control system using a microcomputer with 12-bit A/D resolution; includes software program listing.
National Semiconductor AN-235 (16pp)

Applications (cont)

9 **"Bicycle Computer Using the CDP6805G2 Microcomputer"**
(CDP6805G2)
Provides schematics, parts layout and computer program listing for construction of a bicycle computer. The computer features include instantaneous speed and average speed measurement, resettable trip odometer, resettable long-distance odometer, cadence, and calibration for wheel size.
RCA ICAN-7198 (28pp)

10 **"Bicycle Computer Using the MC146805G2 Microcomputer"**
(MC146805G2)
Provides schematics, parts layout and computer program listing for construction of a bicycle computer. The computer features include instantaneous speed and average speed measurement, resettable trip odometer, resettable long-distance odometer, cadence, and calibration for wheel size.
Motorola Semiconductor AN-858 (28pp)

11 **"CRT Terminal Design Using the 8275 and 8279"**
(8275, 8279, 8224, 8080, 8257, 8228, 8212, 8251, 2708, 2714, 2716)
Provides component descriptions and system design details needed to apply the 8275 programmable CRT controller and 8279 programmable keyboard/display interface in CRT systems. Flowcharts, sample code, and schematics included.
Intel AP-32 (57pp)

12 **"Communication Interfaces for the IMP-16"**
(IMP-16)
Describes the use of this microprocessor in leased line and switched line applications with the communications conforming to EIA standard RS232-C.
National AN-152 (13pp)

13 **"Controlled Dot Matrix Printer S9900"**
(S9900)
Describes use of the device to control a 7040 series dot matrix printer. Supplies block diagram, flowchart, and software listing.
Gould AMI AN-79-99-03 (7pp)

14 **"Cordless Telephone Sets"**
(PIC7000, ER5901, SP0256, SPR-32)
Describes how the PIC7000 Series microprocessor can be used as a feature telephone controller in conjunction with a DTMF dialer, speech synthesizer, and memory chips. The microprocessor can be programmed to add such functions as a real-time clock, call timer, least-cost routing, and auto redial.
General Instrument AB-202 (2pp)

15 **"Correcting Errors Digitally in Data Acquisition and Control"**
(SDM856/857, MP20, MP21)
Describes how to combine a microprocessor with analog techniques to optimize the compensation of gain and offset errors in digital data-acquisition and control applications.
Burr-Brown Research AN-101 (6pp)

16 **"DCT11-Based Microcomputer System"**
(T11)
Describes a cost-effective application of the T11 microprocessor as a stand-alone system or as an intelligent terminal connected to a host computer.
Digital Equipment Corp. (17pp)

17 **"Data Acquisition Networks with NMOS and CMOS"**
(MC14433, MC6800)
Discusses an 8-channel acquisition network using the MC14433 A/D converter and the MC6800 microprocessor.
Motorola AN-770 (11pp) MP000500

MICROPROCESSOR

Applications (cont)

1 **"Data Handling with the IMP-8"**
(IMP-8, IMP-16)
Covers basic concepts for transferring data from a memory to peripherals.
National AN-117 (4pp)

2 **"Details of INS1771 FDC"**
(INS1771)
Introduces the device and its command set. Provides timing diagrams and system block diagrams.
National AN-220 (10pp)

3 **"Direct Memory Access with the 8257 DMA Controller"**
(8257, 8080A, 8085A)
Examines determining the need for DMA, operation of the device and its application in an MCS-85 system controlling a Burroughs self-scan display panel. Includes diagrams, flowcharts, and software.
Intel AP-48 (4pp)

4 **"FD179X Application Notes"**
(FD179X)
Describes devices and their operation. Includes schematics and timing diagrams.
Western Digital (16pp)

5 **"Feature Telephones"**
(PIC7000, AY-5-9400, SP0256, ER5901, SPR-16)

6 **"Function/Application of the LD122/LD121A ±4½ Digit A/D Converter Set in Measurement Systems"**
An updated version of AN77-3 extending system resolution beyond 10 μV. Describes interfacing guidelines and precautions.
Siliconix AN80-8 (9pp)

7 **"Graphics Using the DP8350 Series of CRT Controllers"**
(DP8350)
General discussion on using the device in CRT graphics applications. Topics covered include using line buffers and memory mapped graphics.
National AN-212 (4pp)

8 **"High-Speed Data Communications Link Using an MC68121 IPC and MC6844 DMAC"**
(MC68121, MC6844)
Describes a microcomputer system designed to provide efficient data transfer. In the system, direct memory access is used to perform data transfers between memory and the data communication link. Includes schematics and timing diagrams.
Motorola Semiconductor AN-886 (8pp)

9 **"High-Speed Digital Servos for Motor Control Using the 2920/21 Signal Processor"**
(2920, 2921)
Describes the use of a single 2920 for implementing a whole position, servo control loop, including tachometer, compensation networks, nonlinear velocity control, and the logic operations required to switch between the different control modes.
Intel AP-124 (36pp)

10 **"How to Use a COP420R/COP444LR"**
(COP420R, COP444LR)
Through the use of programmed EPROMs, the COP420R/COP444LR piggyback EPROM microcontrollers can be used to emulate most of the COPS microcontrollers. This note explains how to configure the devices in various systems.
National Semiconductor AN-330 (4pp)

Applications (cont)

11 **"Implementing an 8-Bit Buffer in COPS"**
(COP440, COP444L)
Sometimes a COP microcontroller must input and/or output 8-bit data, e.g., when handling ASCII data. In some applications the processor must also provide temporary storage for 8-bit data before it is output. This note describes how the COP instruction set and RAM structure can provide a 32 digit, 8-bit buffer for a solution to these applications.
National Semiconductor AN-329 (4pp)

12 **"Initializing the CIO"**
(Z8536, Z8036)
Explains how to initialize the Z8536 and Z8036 counter/timer and parallel I/O units, whose handshake control, bit manipulation, pattern recognition, and interrupt control capabilities extend the range of applications beyong that of traditional counter/timer and parallel I/O circuits.
Zilog (13pp)

13 **"Intelligent Fast Disk Controller Using AM29116"**
(AM29116)
Describes a disk controller using the AM29116 16-bit bipolar microprocessor. Includes microcode.
Advanced Micro Devices (67pp)

14 **"Interfacing M6800 Peripheral Devices to the MC68000 Asynchronously"**
(M6800, MC68000)
Describes a technique for interfacing peripheral devices to an MC68000 microprocessor using a 4-chip TTL circuit.
Motorola Semiconductor AN-808 (9pp)

15 **"Keyboard Display Scanning with Intel's MCS-48 Microcomputers"**
(8035, 8039, 8048, 8049, 8021, 8022, 8748, 8041, 8741)
Presents a software package for interfacing the devices to keyboards and displays. Includes circuit diagrams as well as program details.
Intel AP-40 (24pp)

16 **"Low Cost Versatile CRT Terminal Using the CRT5027 and CRT8002"**
(CRT5027, CRT8002)
Describes devices and their uses in a CRT terminal with a screen format of 16 rows of 64 characters. Provides schematics, block diagram, and the changes required for an 80 character/row, 24 row format.
Standard Microsystems AN2-1 (11pp)

17 **"Low Voltage Inhibit (LVI) Capability of the M6805 HMOS Microcomputer (MCU) Family"**
(M6805)
The low-voltage inhibit option for many M6805 family devices provides a means for the MCU to sense a drop in supply voltage and then shut itself down in a well-defined manner. This note describes the LVI option in detail and discusses several applications.
Motorola AN-892 (20pp)

18 **"MD68SC49 Bus Monitor Applications Guide"**
(MD68SC49)
Outlines use of the MD68SC49 for transparent bus analysis, monitoring several microprocessor elements transparently, and replacing logic analyzers and emulators for hardware/-software development and testing.
Mitel MSAN-109 (11pp)

19 **"Memory-Mapped I/O"**
(TMS9900, TMS9927)
Discusses a technique for transferring 8 or 16 bits in parallel to an I/O port. The method is useful for applications requiring the transfer of complete bytes or words such as for parallel communication links.
Texas Instruments (6pp)

Applications (cont)

1 **"Microprocessor I/O Techniques"**
(TMS9900)
Discusses the selection of the proper I/O mode for different applications to simplify hardware interface and associated software.
Texas Instruments (6pp)

2 **"Microprocessor Mates with MOS/LSI Keyboard Encoder"**
(IMP-16)
Shows how to interface a keyboard to the IMP-16 microprocessor for text editing.
National MOS/LSI Databook AN-128 (6pp)

3 **"Microprocessor Multiplication Accelerator"**
(NCR45CM16)
The repeated multiply-accumulate operations common in many applications slow down an unaided general purpose microprocessor. Designed specifically as a microprocessor "multiplication accelerator," the NCR45CM16 microprocessor bus compatible, 16 x 16 multiplier provides a relatively inexpensive solution to this problem. This note explains how this low-power chip can be interfaced to a system with little additional circuitry.
NCR Corporation M-1 (12pp)

4 **"Motor RPM Control: An INS8060 Multiprocessor Example"**
(INS8060)
Examines multiprocessor theory and system implementation. Includes circuit diagrams and software listings.
National AN-201 (10pp)

5 **"Multimicroprocessor-Based Transistor Test Equipment"**
A modular, low-cost, multiprocessor transistor test system is described, along with its use for testing both traditional parameters and those characteristics directly related to an application.
RCA ICAN-7020 (8pp)

6 **"Multiprocessing Capabilities of the MC68020 32-bit Microprocessor"**
(MC68020)
The MC68020 is the first member of the Motorola 68000 family to support the M68000 Coprocessor Interface directly in hardware. With the addition of two new instructions and an enhanced bus interface, it also supports loosely coupled multiprocessor systems more efficiently than earlier members. This note explains how the M68020 is able to perform these functions, using multiple processors.
Motorola AR-220 (16pp)

7 **"Multiprocessor Controller Using the MC6809E and the MC68120"**
(MC6809E, MC68120)
Discusses the advantages of using a multiprocessor system to provide for throughput expansion without the need for total redesign of the existing system. Includes schematics, block diagrams and flow charts.
Motorola AN-850 (20pp)

8 **"Musical Application for the S2000 Microcomputer"**
(S2000)
Describes capabilities on the device when programmed to generate any of 60 musical frequencies and play on command any one of the twelve pre-programmed tunes.
American Microsystems AN-79-2K-02 (14pp)

Applications (cont)

9 **"Programmable Appliance/Outlet Controller using the S2000/2150"**
(S2000/2150)
Discusses hardware and software considerations for designing a programmable timer based on the S2000/2150 microprocessor interfacing with an LED display and keypad.
Gould AMI AN-79-2K-14 (3pp)

10 **"Programmable Industrial Controller"**
(Programmable Industrial Controller)
Presents the DCT11-AA single-chip microprocessor in 8-bit mode applied to driving an inexpensive, user-friendly programmable industrial controller.
Digital Equipment Corp. (4pp)

11 **"S2000 Software Seconds Timing and Display"**
(S2000)
Gives introductory software program demonstrating use of instructions and programming techniques for controlling LED time display.
Gould AMI AN-79-2K-07 (3pp)

12 **"S2000 Software—Touch Control Keyboard Scan and Display Output"**
(S2000)
Describes the display and keyboard scan subroutines for a typical display output program.
Gould AMI AN792506 (6pp)

13 **"S9900 Simplifies Design of Bidirectional I/O Module"**
(S9900)
Demonstrates a bidirectional I/O module built by incorporating standard addressing and multiplexing logic with the device.
Gould AMI AN-79-99-01 (2pp)

14 **"SBP9989-SBP9966 Software Interrupt Simulation Application"**
(SBP9966, SBP9989)
Discusses the operation of an interrupt controller circuit that can artificially simulate interrupts without INT1/INT15 input, a self-test feature that aids in system traceability and debugging.
Texas Instruments AN-SBP9989 (3pp)

15 **"Serial I/O and Math Utilities for the 8049 Microcomputer"**
(8049)
Provides several program modules which illustrate the increased capabilities of the device over initial members of the family. Modules cover full duplex serial I/O, binary multiply and divide, and binary to BCD and BCD to binary conversions.
Intel AP-49 (22pp)

16 **"Simple Console Controller for the F9450"**
(F9450, MK38P70)
Describes how a specially programmed MK38P70 microprocessor performs the console function for the F9450 microprocessor.
Fairchild MC-2 (11pp)

17 **"Simplify CRT Terminal Design with the DP8350"**
(DP8350)
Describes a low-cost CRT data terminal design based on the DP8350 CRT controller and SC/MP microprocessor. Features screen scroll, RS-232C interface, and adjustable band rate. Includes schematics, flowcharts, and PC board layout.
National Interface Databook AN-198 (10pp)

MICROPROCESSOR

Applications (cont)

1 **"Single-Chip Microprocessor DCT11-AA (8-Bit Mode)"**
(DCT11-AA)
The DCT11-AA provides a choice of multiple hardware operating modes. This note outlines its use in a dynamic 8-bit mode, which reduces overall system cost and simplifies integration into designs using commercially available 8-bit peripheral devices.
Digital Equipment Corp. (9pp)

2 **"Soft Scrolling with the CRT5037 VTAC"**
(CRT5037)
Describes method of performing "soft scroll" with the CRT5037.
Standard Microsystems AN1-3 (4pp)

3 **"Special Considerations in Using the MC6801 Interrupt Capabilities"**
(MC6801)
Reviews MC6801 interrupt operation and discusses important interrupt design constraints.
Motorola Semiconductor AN-807 (11pp)

4 **"Speech Recognition"**
(DCT11-AA)
Describes a minimal speech recognition system, for demonstration purposes, built around the DCT11-AA.
Digital Equipment Corp. (3pp)

5 **"TMS1000 Series Preprogrammed and Standard Devices"**
(TMS1000)
Presents ten different uses of the TMS1000 4-bit microcomputer family in applications ranging from appliance controller to sound generator.
Texas Instruments Application Report MP059 (18pp)

6 **"TMS9900 CRT Controller"**
(TMS9900)
Analyzes a CRT controller system that employs a TMS9900 microprocessor. Contains diagrams of the system and a software monitor routine.
Texas Instruments Application Report MOSA6 (32pp)

7 **"Text to Speech System"**
(SP0256-AL2, PIC7041)
Describes a low-cost text-to-speech synthesis system with unlimited vocabulary. A typical configuration combines a PIC7041 microcomputer, SP0256-AL2 speech processor chip, RAM input buffer, filter, amplifier, and speaker.
General Instrument AB-197 (2pp)

8 **"The CRT5027/37/57: Video Timer-Controller"**
(CRT5027, CRT5037, CRT5057)
Characterizes the device and explains how to program it. Provides examples for systems with 80 characters by 24 rows and 40 characters by 12 rows. Schematics and system block diagrams are included.
Standard Microsystems AN-1-1 (18pp)

9 **"The IMP-16 in Communication Applications"**
(IMP-16)
Discusses communication processor functions, requirements for communications microprocessors and system considerations. Gives programming examples including status monitoring, data transmission, message routing, interrupt handling and error control.
National AN-134 (6pp)

10 **"The IMP-8C as a Data Concentrator"**
(IMP-8C)
Describes the use of this microprocessor in data concentrator applications. Covers use with a full duplex modem, and the terminal controller interface.
National AN-113 (6pp)

Applications (cont)

11 **"The MM58274 Adds Reliable Real-Time Keeping to Any Microprocessor System"**
(MM58274)
Discusses the design constraints and hardware and software considerations that are necessary when a real-time clock is added into a microprocessor system.
National Semiconductor AN-365 (16pp)

12 **"The MM58274 Adds Reliable Real-Time Keeping to Any Microprocessor System"**
(MM58274)
Discusses the design constraints and hardware and software considerations that are necessary when a real-time clock is added into a microprocessor system.
National Semiconductor AN-365 (16pp)

13 **"The WC-11 Portable Computer System"**
(T11)
Demonstrates a portable, battery-powered computer system built around the T11 microprocessor and running standard PDP-11 software. The system includes an 80 x 28-pixel graphic LCD, 4 line x 32 character LCD, thermal printer, 128 Kbyte bubble memory, and microcassette tape drive.
Digital Equipment Corp. (11pp)

14 **"The Z-FIO in a Data Acquisition Application"**
(Z8038)
Illustrates the use of an intelligent 128x8 FIFO buffer in a simple data acquisition application. The device allows the CPU to handle data in blocks rather than requiring it to service an interrupt every 100 TRANSLATION ERRORs.
Zilog (8pp)

15 **"Using the 8202 Dynamic RAM Controller"**
(8202, 8085A, 8086)
Describes the device in detail and illustrates its use. Covers functionality, interfacing, decoupling, and speed selection of memory array. Provides 8085A application examples and an interconnect of the 8086 max mode system with 128K bytes of dynamic RAM.
Intel AP-45 (25pp)

16 **"Using the 8295 Printer Controller"**
(8295)
Describes device which interfaces microprocessors to the LRC 7040 series of dot matrix impact printers. Provides software and schematics for various interface schemes.
Intel AP-54 (31pp)

17 **"Using the CRT5027 VTAC for Double Height Characters"**
(CRT5027)
Outlines procedures for obtaining double height characters using the device and a 32 x 8 PROM. Circuit diagram and program for both the device and PROM included.
Standard Microsystems AN1-2 (2pp)

18 **"Vacuum Fluorescent Display Driven by TMS9940"**
(TMS9940)
Describes how the TMS9940 single-chip microcomputer makes an efficient, low-cost controller for multi-character fluorescent displays.
Texas Instruments Applications Report MP717 (28pp)

19 **"Versatile Thermostat Using CMOS MC146805E2 MPU"**
(MC146805E2)
Describes the design and operation of a dual-setback electronic thermostat using an MC146805E2 microprocessor. Includes schematics, block diagrams and flow charts.
Motorola Semiconductor AN-855 (20pp)

Applications (cont)

1 **"Video Terminal Interface Design Using TMS9927 Controller/Timer"**
(TMS9927)
Describes a terminal interface design for connecting a TM990 microcomputer module with a keyboard and an RS Video Monitor to form a complete stand alone terminal.
Texas Instruments Application Report MP024 (48pp)

General

2 **"Monitor for the CDP6805G2 Microcomputer"**
(CDP6805G2)
The CDP6805G2 ROM contains a monitor routine that makes it possible to evaluate the CDP6805G2 using a standard RS232 terminal. Describes monitor operation along with an assembled listing of the actual program.
RCA ICAN-7200 (16pp)

3 **"16-Bit Operations in the CDP1802 Microprocessor"**
(CDP1802)
Describes various software routines and a few interface circuits that can be used to manipulate full 16-bit values in the CDP1802.
RCA ICAN-6842 (6pp)

4 **"28000 vs 6800 Register Architecture"**
(Z8000)
Examines the difference between the Z8000 and 6800 register architectures on the basis of general-purpose vs special-purpose registers, pairing vs telescoping of subregisters and register-set extensibility.
Zilog (5pp)

5 **"A Comparison of Microcomputer Units: Benchmark Report"**
(Z8611, 8051, MC6801)
Compares the Zilog Z8611, Intel 8051, and Motorola MC6801 microcomputers in terms of functions and features.
Zilog Microprocessor Applications Reference Book 1-15 (13pp)

6 **"A Logical Tester for the R6500/1 One-Chip Microcomputer"**
(R6500/1)
Explains a method of implementing a logical tester for the R6500/1 single-chip microcomputer. The device tests each instruction in every implemented addressing mode of the CPU, I/O port, interrupts, counter-timer, RAM, and ROM.
Rockwell No. 258 (40pp)

"A Non-Volatile Microprocessor Memory Using 4K N-Channel MOS RAMS"
See listing under (Memory) RAMS (Motorola)

7 **"A Study of the Crystal Oscillator for CMOS-COPS"**
Discusses cost/performance tradeoffs in selecting oscillator circuits that cover the frequency range of CMOS COPS.
National Semiconductor AN-400 (rpp)

8 **"A Users Guide to COPS Oscillator Operation"**
(COPS Series)
Provides a brief overview of the COPS microcontroller oscillator circuits in terms of complex frequency analysis.
National Semiconductor AN-326 (4pp)

General (cont)

9 **"An Introduction to Microprocessors and the RCA COSMAC COS/MOS Microprocessor"**
(COSMAC)
Provides an introduction to the fundamentals of microprocessors and to the specific capabilities of the RCA COSMAC microprocessor.
RCA ICAN-6416 (8pp)

10 **"An Introduction to the Use of the General Processor Unit, GP001"**
(GP001)
Covers the functional operation of the GP001 bit-slice processor, emphasizing register file architecture and data sources, port buffer modes, data type selectors, and arithmetic-logic circuitry. Several programming examples are given.
RCA ICAN-7202 (10pp)

11 **"CDP1804 and CDP1805 Processors Improve System Performance and Lower Chip Count"**
(CDP1804AC, CDP1805AC)
Describes the architecture and outlines the capabilities of the CDP1804/5 8-bit CMOS microprocessors. Hardware and software support for the CDP1800 Series is also discussed.
RCA ICAN-6957 (6pp)

12 **"CDP6805 CMOS Family Emulators"**
(CDP6805)
Describes a method of emulation using a processor that can execute the same code as the MCU and can be interfaced with different external memory and peripheral configurations. Gives design criteria and emulator examples for the CDP6805F2 and CDP6805G2.
RCA ICAN-7199 (8pp)

13 **"Comparison Study NSC800 vs 8085, Z80"**
(NSC800)
Compares the NSC800, 8085 and Z80 MPUs on the basis of critical selection factors, including speed, bus structure, architecture, instruction sets and I/O requirements.
National Semiconductor uB 3 (3pp)

14 **"Cost Effective Memory Selection for Z8000 CPUs"**
(Z8000)
Many factors enter into the selection of a CPU and memory characteristics for a given application. This note examines a simple formula that relates these factors to each other and provides examples of the formula applied in common situations.
Zilog (5pp)

15 **"Design Considerations for Conversion to Rockwell R6500/11 and R6501Q from Intel 8051/8031"**
(R6500/11, R6501Q)
Discusses the similarities and differences between two families of microcomputers and the changes required for converting from one to the other.
Rockwell AN-2178 (20pp)

16 **"Designing with the H.E.L.P. Logic Minimizer Utility"**
Describes two software design tools, a virtual array program and logic minimizer, which automatically eliminate the need for manual analysis and reduction of redundant terms.
Harris AN-100 (5pp)

17 **"Error Detection and Correction Using SN54/74ALS632 through SN54/74ALS635"**
(SN54ALS632, SN54ALS633, SN54ALS634, SN54ALS635, SN74ALS632, SN74ALS633, SN74ALS634, SN74ALS635)
Discusses error detection and correction in 32-bit systems. Other areas covered are byte-write, diagnostics, and applications in 16-bit systems.
Texas Instruments AR-SDAA001 (7pp)

MICROPROCESSOR

General (cont)

1 **"Fast Block Moves with the Z8000 CPU"**
(Z8000)
Shows how to use two different mechanisms in Z8000 CPUs to accomplish memory-to-memory transfers at speeds usually associated with DMA equipment. The performance of the mechanisms is compared for both short and long block moves.
Zilog (2pp)

2 **"Four-Bit Single-Chip Microcomputers: Their Nature and Applications"**
(MB8841)
After a brief review of computer architecture, this note explains the design optimization possible by using a "bit wiggler" like the MB8841.
Fujitsu Microelectronics AR-003 (10pp)

3 **"GAPP Memory Expansion"**
Outlines methods by which the Geometric Arithmetic Parallel Processor chip can expand its memory by using external static RAM.
NCR AN-2 (6pp)

4 **"GTE CMOS Brings New Life to 6500-Series Microprocessors"**
(G65SC00)
Describes CMOS replacements for NMOS 6500 microprocessors. Discusses an enhanced instruction set for reducing software bugs, additional op codes for reducing program size, and a bus enable signal for reducing complexity in DMA applications.
GTE Microcircuits 3002-04-00 (16pp)

5 **"Initializing the Z8001 CPU for Segmented Operation with the Z8010 MMU"**
(Z8001, Z8010)
Explaines how a Z8001 CPU with at least one Z8010 memory management unit attached is initialized for segmented operation. Also describes the specification of the initial CPU status to be established in response to RESET, the execution of the first program out of unmapped memory, and the initialization of the first MMU.
Zilog (6pp)

6 **"Keyless Entry System Using an MC146805F2 8-Bit Microcomputer Unit"**
(MC146805F2)
Describes a keyless entry system in which a dedicated MC146805F2 MCU is used to execute a program that can control a larger configuration to form a secure entry system. Intended only as an aid in better understanding the MC146805F2 and how it fits into a secure entry system.
Motorola Semiconductor AN-863 (10pp)

7 **"Memory Mapping Using SN54/74LS610 through SN54/74LS613"**
(SN54LS610, SN54LS611, SN54LS612, SN54LS613, SN74LS610, SN74LS611, SN74LS612, SN74LS613)
Discusses memory mapping philosophy and implementation using the LS610 Series devices.
Texas Instruments AR-SCA-205 (16pp)

8 **"Microprocessor Family Turns to Low-Power CMOS"**
(80C86)
Discusses the 80C86 CMOS microprocessor family, its functional compatibility with NMOS parts, and its advantages for military applications.
Harris CMOS Military Applications p. 8 (7pp)

General (cont)

9 **"New CMOS CDP1800 Series Processors Enhance System Performance"**
Reviews the features and advantages of the CDP1800 Series of CMOS microprocessors.
RCA ICAN-6971 (6pp)

10 **"Product Development for the MC68020"**
(MC68020)
An introduction to the MC68020, the 32-bit implementation of the MC68000 family of microprocessors.
Motorola Semiconductor AR227 (5pp)

11 **"Real-Time Interrupts Using the CDP1804A/5A/6A CMOS Microprocessors"**
(CDP1804A, CDP1805A, CDP1806A)
Explains the theory of real-time interrupt-driven software and gives two sample programs for implementation on the 1804A/5A/6A CMOS microprocessors: one for generating a once-per-second tick rate and 24-hour time; and one for selecting timer-counter coefficients and calculating inherent error.
RCA ICAN-7144 (4pp)

12 **"S6802 Microprocessor Crystal Specification"**
(S6802)
Explains method for specifying the oscillator crystal for the S6802 microprocessor.
Gould AMI AN796803 (1pp)

13 **"S68045 Compared with Motorola MC6845"**
(S68045)
Describes the fundamental difference between the two devices.
Gould AMI

14 **"S9900 Technical Article Reprints"**
(S9900)
A Compilation of six articles covering: a comparison of the 9900, Z8000 and 8086; a real-time control software design using the 9900; a multiprocessor system design using the 9900; and using the 9900 to implement the NBS data encryption standard.
Gould AMI

15 **"Self-Contained Self-Check Unit for M6805 Family Single-Chip Microcomputers"**
(M6805)
Single-chip self-contained microcomputers are significantly more difficult to test than other LSI ICs. This note describes an easy-to-build self-testing unit which uses the on-chip processor to test itself and other sections of the part.
Motorola Semiconductor AN-910 (16pp)

16 **"Software Comparison NSC800 vs 8085, Z80"**
(NSC800)
Compares the instruction sets of the NSC800, 8085 and Z80.
National Semiconductor uB4 (3pp)

17 **"Software Debug Techniques Using the MD68SC49B"**
(MD68SC49B)
Gives debug routines and implementations of an LSI device designed to monitor microprocessor address, data, and control buses.
Mitel MSAN-115 (6pp)

18 **"The Advanced Architectural Features of the Z8 Microcomputer"**
(Z8)
Gives an architectural overview of the Z8 including memory space, register organization, I/O and interrupt structures, counter/timers, and instruction set. Sample application describes a graphics computing system built around the Z8.
Zilog Microprocessor Applications Reference Book 1-3 (12pp)

General (cont)

1 **"The MC6809/MC6809E Sync Instruction"**
(MC6809, MC6809E)
In many applications external interrupts are used to synchronize a microprocessor to external events. However, the latent period required for stacking operations prior to the interrupt routine is often too long. This note describes a solution to this problem by using the SYNC instruction of the MC6809.
Motorola Semiconductor AN-865 (4pp)

2 **"User-Callable Self-Check Subroutines for the M6805 HMOS/M146805 CMOS Family of Microcomputers"**
(M6805, M146805)
Explains the features of self-check routines within members of the M6805 HMOS and M146805 CMOS families. Included are user-callable self-check firmware subroutines. These subroutines check RAM, ROM, Timer, and an A/D converter.
Motorola Semiconductor AN-903 (36pp)

3 **"Using the M6805 Family On-Chip 8-Bit A/D Converter"**
(MC6805R2, MC6805S2)
Written for the digital designer with little or no programming experience, this note covers the factors to be taken into consideration when using microcomputer-resident A/D converters.
Motorola Semiconductor AN900 (20pp)

4 **"Vectoring by Device Using Interrupt Sync Acknowledge with the MC6809/MC6809E"**
(MC6809, MC6809E)
Describes a circuit in which the interrupting device provides all or part of the vector address, thus eliminating the often lengthy time required to poll various devices to determine which peripheral is requesting services.
Motorola Semiconductor AN-866 (6pp)

5 **"Z80 Designers Guide"**
(Z80-SIO, MK3805, MK3807)
Includes general information, technical manuals on the Z80 and MDL families, and several Z80 microcomputer application notes.
Mostek Z80 Designers Guide (464pp) $10.00

6 **"Z8000 vs. 68000: the Address/Data Bus"**
(Z8000, 68000)
The Z8000 time multiplexes one set of lines for address and data, while the 68000 uses two separate sets of lines. This note considers the tradeoffs of the two approaches.
Zilog Microprocessor Applications Reference Book 3-63 (1p)

7 **"Z8600 Interrupt Request Register"**
(Z8600)
Describes the interrupt request register of the Z8600, and explains how to avoid undesirable interrupt requests after the interrupt system is enabled.
Zilog Microprocessor Applications Reference Book 1-29 (1p)

I/O

8 **"A 2.0 MHz MC68B09E System with Transparent Refresh of Dynamic RAM"**
(MC68B09E)
Describes an interface of a MC68C09E to an array of 64K dynamic RAMs, creating the basis for such applications as a smart memory spooler and a virtual RAM disk.
Motorola Semiconductor AN941 (24pp)

I/O (cont)

9 **"A Terminal Interface, Printer Interface, and Background Printing for an MC68000-Based System Using the MC68681 DUART"**
(MC68681)
Presents a complete MC68000/MC68681 interface and a dual-task sample application. Describes software routines for initializing and driving the MC68681 serial channels and counter and for implementing the dual-tasking scheme.
Motorola AN899 (35pp)

10 **"Add Serial Communication Capability to the 8086/8088 Family Using the Z80-SIO"**
(MK3884, MK3885, MK3887)
Explains how the Z80-SIO (MK3884/5/7), a dual full-duplex USART device, can be adapted to the 8086, 8088, and other microprocessors. Includes a schematic for an 8086 minimum system and a sample subroutine.
Mostek 1982/83 Z80 Designers Guide V-1 (5pp)

11 **"An IEEE-488 Bus Interface Using DMA"**
(MC6809, MC68488, MC6844)
Provides information about using the MC6809 processor to form a Talker/Listener IEEE-488 System. Discusses hardware and software considerations of system implementation, and includes a review of data transfer operation, the GPIB, and direct memory access techniques.
Motorola Semiconductor AN-831 (22pp)

12 **"Application Prototype Board (APB) for MC6801/MC6803/MC68701 MCUs"**
(MC6801, MC6803, MC68701)
Describes the design and fabrication of an application prototype board for evaluating single-chip microcomputers in the MC6801 family. Includes a parts list and artwork needed to generate the p-c board.
Motorola AN799A (12pp)

13 **"Asynchronous Communications for the MC68000 Using the MC6850"**
(MC68000, MC6850)
Discusses operation of an asynchronous communications interface adapter and interconnection requirements for use with the MC68000 microprocessor.
Motorola Semiconductor AN-817 (4pp)

14 **"Connecting an EF6800 Family Peripheral to the 8085 Bus"**
(EF6800)
Explains how to derive the control signals required by the EF6800 family of peripheral ICs from 8085 control signals.
Thomson CSF Components NA-017A (11pp)

15 **"Dual-Ported RAM for the MC68000 Microprocessor"**
(MC68000, MCM68B10)
Discusses the use of dual-ported RAMs to provide a means for multiprocessor systems to exchange data without directly interfering with each other. Includes hardware considerations, schematic diagrams, and test programs.
Motorola Semiconductor AN-881 (9pp)

16 **"Expanding 48-Series Program Space in 4K Byte Increments"**
(INS8048)
Reviews the external memory interface for the 48-Series microcomputers and shows how to use external ICs for paging control of add-on memory.
National AN254

MICROPROCESSOR

I/O (cont)

1 **“General Application Principles for EF4440 (ILA) and EF4442 (RTA)”**
(EF4440, EF4442)
Describes the procedures for exchanging data between a microprocessor and the EF4440/2 ARINC 429 circuits.
Thomson CSF Components NA018-A (12pp)

2 **“Hardware Considerations for Direct Memory Access Using the MC6809 Microprocessor Unit and MC6844 DMA Controller”**
(MC6809, MC6844)
Discusses hardware considerations regarding DMA in systems using the MC6809 microprocessor, with emphasis on DMA dead-state protection.
Motorola Semiconductor AN-820 (5pp)

3 **“Increasing Throughput for IMP-16 Serial Input/Output”**
(MM5303)
Describes use of device to improve communication between microprocessor and peripheral with little increase in component count.
National AN-160 (7pp)

4 **“Intelligent Display Controller Designer’s Notes”**
(10937, 10951, 10957, 10939)
Covers a family of vacuum fluorescent display drivers, with details on interfacing to a host microprocessor and to various display formats.
Rockwell AN-2175 (48pp)

5 **“Interfacing EF9365, EF9366, and EF9367 Graphic Display Processors to Z80A, 8085A, 6502 and 2650A-1 Microprocessors”**
(EF9365, EF9366, EF9367)
Gives timing and special requirements for interfacing these graphic display processors to various microprocessors.
Thomson CSF Components NA-032A (13pp)

6 **“Interfacing Higher-Speed R6502s to Low-Speed I/O and Memory”**
(R6502)
Although the 2-MHz and 3-MHz R6502 CPUs can be used to build high-performance microcomputer systems, memory and I/O devices able to operate at these speeds are either costly or unavailable. This note discusses three methods of interfacing an R6502 to slower peripheral devices.
Rockwell No. 296 (3pp)

7 **“Interfacing Microprocessors and Microcomputers with HI5712 High Performance Analog-to-Digital Converter”**
(HI5712)
Discusses use of the HI5712 A/D converter in conjunction with various microprocessors.
Harris Semiconductor AN-528 (6pp)

8 **“Interfacing Multiplexed Bus Peripherals with Non-Multiplexed MPUs”**
(MC6800, MC6809, MC146818, MC146823)
Discusses methods for providing an interface between non-multiplexed bus MPUs and multiplexed bus peripherals.
Motorola Semiconductor AN-864 (4pp)

9 **“Interfacing the DP8408/09 to Various Microprocessors”**
(DP8408, DP8409, Z80A, Z8000, MC68B09)
Demonstrates a typical application of the DP8408 dynamic RAM controller/driver in Z80, Z8000 and MC68B09E-based systems.
National Semiconductor AN-309 (16pp)

10 **“Interfacing the Series 3200 CPUs to the Multibus”**
(3200)
Presents an implementation of the arbitration section of a Multibus interface specially designed for the Series 32000 CPUs.
National Semiconductor AN-406 (5pp)

I/O (cont)

11 **“Interfacing the Z-BUS Peripherals to the 8086/8088”**
(Z8030, Z8036, Z8038)
Discusses a general design that enables the 8086/8088 processors to interface with the Z-Bus peripherals.
Zilog (8pp)

12 **“Interfacing the Z8500 Peripherals to the 68000”**
(Z8500)
This note discusses the Z8500/Z6800 interfaces and presents hardware examples and verification techniques.
Zilog (12pp)

13 **“Interlaced Video Displays Utilize Low Cost CRT Controllers”**
Discusses the design of interlaced raster scan CRT displays that refresh at half the usual rate and thus require less expensive components.
Standard Microsystems AR1-5 (6pp)

14 **“Low-Cost CSMA/CD Using FIFO/8001 EDLC Interconnection”**
(8001, 8002, 8003)
Describes a method for interfacing an Ethernet communications channel to a computer bus using FIFO buffer memory, turning the channel into an I/O port through which message bytes can be serially transferred.
SEEQ AN-7 (6pp)

15 **“MM58167A Real Time Clock Design Guide”**
(MM58167A)
Covers hardware interface to microprocessors, clock interrupts, oscillator operation, accuracy, calibration techniques, software, and battery backup considerations for the MM58167A real-time 24-hour clock.
National Semiconductor AN353 (18pp)

16 **“Microcomputer I/O Systems-Glossary of Terms and Definitions”**
Explains terminology used in microcomputer I/O Systems.
Burr-Brown AN-124 (2pp)

17 **“Microprocessor Interface Methods for High-Speed Data Acquisition Systems”**
(HI5900, HI5712)
Describes system configurations and operation of high-speed data acquisition systems using the HI5900 analog signal processor and the HI5712 12-bit A/D converter.
Harris Semiconductor AN-529 (3pp)

18 **“Microprocessor-Compatible DACs and the MC6890”**
(MC6890)
A microprocessor-compatible DAC requires latches on the digital input lines and an enable input. The MC6890 microprocessor-compatible DAC meets these requirements by incorporating two input latches and a latched enable signal. This note discusses DAC theory, specific interface examples with several microprocessors, and sample applications.
Motorola Semiconductor AN-842 (32pp)

19 **“Microprocessors—An Introduction”**
Shows system components, defines terms and describes operation of an elementary computer system.
National AN-114 (4pp)

20 **“NS8050U Microwire Plus Interface”**
(ANS8050, 8048)
Describes the features of the Microwire Plus, a serial communications interface between 8048 microcontrollers and peripheral devices. Several programming examples are given.
National Semiconductor AN-358 (6pp)

I/O (cont)

1 **“NS8050U Microwire Plus® Interface”**
(NS8050)
Describes the operation and applications of a serial communications interface for the 8048 microcontroller family.
National Semiconductor AN358 (5pp)

2 **“Printer Control with the R6522 Versatile Interface Adapter (VIA)”**
(R6522)
Describes how a dot matrix printer mechanism can be interfaced to an AIM 65 microcomputer using an on-board VIA to control all printer functions.
Rockwell No. 256 (22pp)

3 **“Prioritized Individually Vectored Interrupts for Multiple Peripheral Systems with the MC68000”**
(MC68000)
Reviews MC68000 interrupt structure and discusses circuits comprised of standard TTL parts for generating interrupt vector numbers.
Motorola Semiconductor AN-819 (6pp)

4 **“R6551 Asynchronous Communications Interface Adapter (ACIA)”**
(R6551)
Details the operation, interface requirements, and diagnostic operating modes of the R6551 ACIA, a program-controlled interface between 8-bit microprocessor-based systems and serial communications data sets and modems.
Rockwell No. R6551 (19pp)

5 **“RS-232C Interface for AIM 65”**
(R6500)
Two low-cost methods are described for allowing the AIM 65 to communicate with CRTs and printer terminals having a standard RS-232C serial channel.
Rockwell No. 230 (1p)

6 **“SBP9989 Memory Interface to SMJ5517 16K CMOS SRAM”**
(SBP9989, SMJ5517)
Outlines the requirements for interfacing the SMJ5517 static RAM to an SBP9989. Details include line loading factors, timing considerations, and address line buffering.
Texas Instruments ANSP9989 (4pp)

7 **“Selecting Input/Output Options on COPS Microcontrollers”**
(COPS Series)
Provides a guide to the user-selectable input and output options available for COPS microcontrollers. Summarizes capabilities of each I/O option.
National Semiconductor AN-401 (10pp)

8 **“Standard SCSI Bus Facilitates Peripheral Control”**
(MC68230)
Explains how the MC68230 interface/timer chip makes the most of the SCSI peripheral bus compared with simple microprocessor interface chips.
Motorola AR224 (9pp)

9 **“System 65 Bus Interfacing”**
(R6500)
This note aids users designing their own modules for the System 65 bus. Descriptions of bus signals, drive capabilities, loading, and timing are included.
Rockwell No. 240 (4pp)

I/O (cont)

10 **“TMP Dynamic RAM Interfacing”**
(TMP)
Describes the techniques for interfacing the TMP video controller to dynamic RAM.
National Semiconductor AN355 (5pp)

11 **“TMS 4500A/6809E Interface”**
(TMS4500A, 6809E)
Describes a circuit configuration that interfaces the 6809E microprocessor to dynamic RAM memory via the TMS4500A-20 dynamic RAM controller. The memory array is 32K bytes deep and uses the TMS4416 16Kx4 dynamic RAM. The output enable function of the TMS4416 is used to allow late write operation of the memory without the need of external bus buffers.
Texas Instruments SMCA005 (8pp)

12 **“TMS4500A DRAM Controller Configured for the TMS99000 Series 16-Bit Microprocessors”**
(TMS4500A)
Describes two memory system configurations showing how the TMS4500A can be configured to work with the TMS99000. A memory mapping scheme is provided that is flexible enough to work with many microprocessor applications using the TMS99000 without modification.
Texas Instruments SMCA003 (12pp)

13 **“TMS4500A/6502 Interface”**
(4500A, 6502)
Presents a circuit configuration using the TMS4500A dynamic RAM controller to interface the 6502 microprocessor to a dynamic memory array. The memory array is 32K bytes deep and features the TMS4416 16Kx4 dynamic RAM. The output enable function of the TMS4416 is used to allow late write operation of the memory without the need for an external data bus buffer.
Texas Instruments SMCA004 (6pp)

14 **“TMS4500A/8088 Interface”**
(TMS4500A, 8088)
Presents a circuit configuration to interface dynamic memories to the 8088 microprocessor using the TMS4500A dynamic RAM controller. The memory array is implemented with TMS4416 dynamic RAMs for increased modularity.
Texas Instruments SMCA006 (8pp)

15 **“TMS4500A/MC68000 Interface”**
(TMS4500A, MC68000)
Discusses several circuit configurations interfacing three speed ranges of the MC68000 microprocessor to dynamic RAM memory via the TMS4500A-15 dynamic RAM controller. The MC68000-8 and MC68000-10 operate with one wait on normal memory access cycles. The memory array is organized as 32K words utilizing the TMS4416 arranged as two rows of 16Kx16 bits.
Texas Instruments SMCA008 (16pp)

16 **“The MC68230 Parallel Interface/Timer Provides an Effective Printer Interface”**
(MC68230, MC68000)
This application note describes a parallel interface/timer interfaced with a Printronix Model 300 printer using the industry-standard Centronics interface.
Motorola Semiconductor AN-854 (6pp)

MICROPROCESSOR

I/O (cont)

1 **"The Video Display Generator as a Color Television Interface"**
(MC6847, MC1372)
Describes two ICs that convert a television display into an active, intelligent terminal when used with an MPU, some memory devices and about a dozen passive discrete components.
Motorola Semiconductor AN-822 (18pp)

2 **"Understanding the CDP1851 Programmable I/O"**
(CDP1851)
Outlines the operating and interrupt modes and the timing requirements of the CDP1851 general-purpose programmable I/O device. Two sample applications are included.
RCA ICAN-7063 (6pp)

4 **"Use of the CDP1852 8-Bit I/O Port with RCA Microprocessor Evaluation Kit CDP18S020"**
(CDP1852)
Describes several applications of the CDP1852 I/O Port and specifically explains its use in the CDP18S020 Evaluation Kit.
RCA ICAN-6538 (4pp)

5 **"Use of the CDP1854 UART with RCA Microprocessor Evaluation Kit CDP18S020 or EK/Assembler-Editor Design Kit CDP18S024"**
(CDP1854)
Describes several methods of interfacing the CDP1854 with the CDP1802 microprocessor and specifically explains the use of the CDP1854 in the CDP18S020 and CDP18S024 Kits.
RCA ICAN-6632 (6pp)

6 **"Using Dynamic RAM with Series 32000 CPUs"**
(3200)
Gives the results of a timing analysis for two DRAM interfaces: one built from off-the-shelf components and one using specialized high-speed circuitry.
National Semiconductor AN-405 (7pp)

7 **"Using High-Speed CMOS Logic for Microprocessor Interfacing"**
(MC54HC240, MC54HC241, MC54HC242, MC54HC243, MC54HC244, MC54HC245)
Explores the possibility of using high-speed CMOS devices in microprocessor systems where LSTTL, because of its speed, has generally been used. Includes a discussion of the digital logic needs of a microprocessor system.
Motorola Semiconductor AN-868 (18pp)

8 **"Using Interface Circuits in Microprocessor Systems"**
(8T26A, 8T28, 8T95)
Discusses a wide range of quad transceivers, hex buffers, octal transceivers, quad buffers, flip flops, and latches and their use as interface ICs for microprocessor systems.
Signetics AN-200 (17pp)

9 **"Using R65XX Family Peripheral Devices with the Z80 CPU"**
(R6522, R6545, R6520, R6551)
Presents one approach to interfacing the Z80 bus to the R6522 Versatile Interface Adapter, R6545 CRT Controller, R6520 Peripheral Interface Adapter, and R6551 ACTA.
Rockwell No. 287 (4pp)

I/O (cont)

10 **"Using the CRT5037 VTAC for a 512 x 512 Dot Matrix"**
(CRT5037)
Describes the design of dot-graphic terminals using CRT controllers. Includes a detailed example of a 512 x 512 dot graphic terminal.
Standard Microsystems AN1-4 (8pp)

11 **"Using the MP8418 Microcomputer Analog I/O System"**
(MP8418)
Discusses theory and application of a board-level data acquisition system that interfaces with the Intel Multibus. Includes troubleshooting software for system checking.
Burr-Brown AN-95 (12pp)

12 **"Using the Z89 SIO in Asynchronous Communications"**
(Z80-SIO)
Describes the use of the Z80-SIO controller in asynchronous communications in both polled and interrupt environments. Software requirements and with sample programs are given.
Zilog Microprocessor Applications Reference Book 2-47 (23pp)

"Z80 Interfacing Techniques for Dynamic RAM"
(See listing under (Memory) RAMs. (Mostek)

13 **"Z80 Interfacing Techniques for Dynamic RAM"**
(MK4027, MK4116)
Provides examples of ways to interface 16-pin dynamic RAMs to the Z80. Z80 timing and memory control signals, as well as interface circuits, are described.
Mostek 1982/83 Z80 Designers Guide V-7 (16pp)

"Z8000 Memory Interfacing Techniques"
(See listing under (Memory) RAMs. (Mostek)

Programming

14 **"12-Bit Addressing with the Z8600 Series Family"**
(Z8600)
Shows how to use 12-bit addressing to manipulate data in the internal program memory, external program memory and the external data memory of a Z8600-based system.
Zilog (2pp)

15 **"8080/8085 Assembly Language Programming Manual"**
(8080A, 8085A)
Primarily a reference manual, this manual describes the 8080/8085 instruction set, assembly language concepts, assembler directives, macros, programming techniques and interrupts.
Intel $10.00 (210pp)

16 **"A Methodology for Programming COSMAC 1802 Applications Using Higher-Level Languages"**
(COSMAC 1802)
Discusses a method for optimizing time-critical portions of programs written in higher-level languages for COSMAC 1802 applications by recoding those portions in assembly language.
RCA ICAN-6918 (4pp)

17 **"A Microprogram Development System"**
(IMP-16)
Describes the application of microprogramming to LSI processors and the advantages of a microprogram development system for hardware and software.
National AN-123 (6pp)

18 **"A Microprogrammed CPU Using AM29116"**
(AM29116)
Shows techniques for designing a high-performance CPU using the AM29116 16-bit bipolar microprocessor.
Advanced Micro Devices MPR-919 (16pp)

MICROPROCESSOR

Programming (cont)

1 **"A Primer on Microprogramming and Bit-Slice Architecture Exemplified in Systems Using Members of the EPIC (Emulation and Programmable IC) CMOS/SOS Family"**
(GP001, GP502)
Defines the concepts of microprogramming and bit-slice architecture, outlining advantages, limitations, and applications. The functional elements of a microprogrammed bit-slice system are examined individually and then tied together in a hypothetical 16-bit computer.
RCA ICAN-7226 (10pp)

2 **"AIM 65 Program Timer"**
(R6500)
As an alternative to counting instruction cycle times in a program, this note presents a routine that will measure the execution time of a program up to 65,535 microseconds long.
Rockwell No. 274 (4pp)

3 **"An Introduction to RIO Text Processing"**
Presents for the beginning microcomputer user an introductory overview of the fundamentals of Relocatable Modules and Input/Output Management.
Zilog AN1 (24pp)

4 **"An Introduction to Software Development on the CIM System"**
(CIM804)
Intended for the first-time user of a CIM operating under CP/M, this note covers the entire process from writing the source code to burning the software onto a PROM.
National Semiconductor AN-403 (18pp)

5 **"Binary Synchronous Communication Using the Z80 SIO"**
(Z80)
Discusses design considerations for using the Z80 SIO for implementing communication protocol for information exchange between data-processing devices.
Zilog Microprocessor Applications Reference Book 2-83 (4pp)

6 **"CBUG05 Debug Monitor Program for MC146805E2 Microprocessor Unit"**
(MC146805E2, MCM65516)
CBUG05 is a debug monitor program written for the MC146805E2 microprocessor unit and contained in the MCM65516 ROM. CBUG05 allows for rapid development and evaluation of hardware and M6805 Family software, using memory and register examine/change commands as well as breakpoint and single instruction trace commands.
Motorola Semiconductor AN-823A (42pp)

7 **"CBUG05 Debug Monitor Program for the CDP6805E2 Microprocessor Unit"**
(CDP6805E2)
Describes a debug monitor program contained in the CDP65516 ROM which allows for rapid development and evaluation of hardware and 6805 family software.
RCA ICAN-7201 (40pp)

8 **"CDP1802 Microprocessor-Based Setback Thermostat"**
(CDP1802)
Covers the design of a programmable, setback thermostat circuit for controlling heating and air-conditioning systems.
RCA ICAN-6901 (7pp)

9 **"COSMAC Software Development Program on GE Mark III Time Sharing System"**
(CDP 1802)
Describes the COSMAC Software Development Packages (CSDP) available for the GE Mark III time sharing system. Briefly covers the assembler and the simulator debugger which make up the package.
RCA ICAN-6656 (4pp)

Programming (cont)

10 **"How To Use Fortran with Other Intel Languages"**
Shows how to link together program modules comprised of Fortran, PL/M and assembly language; example application is included.
Intel AP-44 (22pp)

11 **"IMP-16 Programming Techniques"**
(IMP-16)
Discusses several aspects of the instruction set to enable programmer to code more efficiently. Includes discussion of subroutines, subroute parameter passing, recursive subroutines, as well as sample programs.
National AN-111 (6pp)

12 **"ISIS-II System Calls"**
Discusses how ISIS routines facilitate program generation by providing interface functions such as program I/O, diskette directory maintenance and program loading and execution routines.
Intel AP-80 (20pp)

13 **"Inter-Intellec Communications"**
(Intellec Series II)
Illustrates how to establish a communications link between two Intellec Series II development systems to allow file transfer and increased program development flexibility.
Intel AP-81 (30pp)

14 **"Interfacing 8500 Peripherals to the Z80"**
(Z80)
Describes hardware interface requirements and interrupt structure of 8500 series peripherals in a Z80 system.
Zilog Microprocessor Applications Reference Book 2-97 (5pp)

15 **"Interfacing PLM Code to CDOS System Functions"**
Describes an array of PLM procedures and supportive macro definitions for interfacing PLM programs to CDOS system functions; includes example program.
RCA ICAN-6928 (6pp)

16 **"Letting the MC68702 Program Itself"**
(MC68701)
Describes how the MC68701 MCU controls data flow to an on-chip EPROM and gates programming power during programming with the help of only a few external devices.
Motorola Semiconductor AN-832 (8pp)

17 **"M6800 Microprocessor Programming Manual"**
(MC6800)
Provides information needed to program the unit, discusses the instruction set, source language, assembler, simulator, Build-Virtual-Machine and HELP program. Gives programs examples.
Motorola $10.00 (303pp)

18 **"MC68705P3/R3/U3 8-Bit EPROM Microcomputer Programming Module"**
(MC68705P3, MC68705Rs, MC68705U3)
Contains a schematic diagram and instructions for programming the MC68705P3/R3/U3 EPROM microcomputers. Includes a parts list and parts layout.
Motorola Semiconductor AN-857 (4pp)

MICROPROCESSOR

Programming (cont)

1 **"MCS-48 and UPI-41 Assembly Language Manual"**
(8041, 8048, 8741, 8748, MCS-48, UPI-41)
Describes the assembly language for programming the MCS-48 and UPI-41 single device microcomputers. Covers procedures and controls for operating the assemblers to translate the source file into object code.
Intel $10.00 (192pp)

2 **"Memory-Mapped vs Explicit I/O"**
(Z8000)
Compares two approaches to the addressing of microprocessor I/O transactions: the memory-mapped I/O of the 68000 and the explicit I/O scheme of the Z8000.
Zilog Microprocessor Applications Reference Book 3-61 (2pp)

3 **"Microprogram Design with the AM2900 Family"**
(AM2900)
Covers one of the more difficult areas of microprogramming a computer—the transformation of machine op codes into microinstruction addresses and data words. Implementation examples are included with emphasis on the use of the 2900 family.
Advanced Micro Devices (Naval Ocean Systems Center Technical Note 178) (10pp)

4 **"Microprogramming Handbook"**
(2911, 2909, 29811, 2922, 29803)
Discusses microprogramming a bipolar processor. Includes sections on microprogram memory, sequencing, branching, jumping, and subroutines.
Advanced Micro Devices, $5.00 (44pp)

5 **"OS3.1 Monitor ROM and Macro Assembler/Linking Loader"**
(OS3.1, R6500/11, R6500/41, M65-651-3)
Discusses updates to the System 65 debug monitor/editor assembler.
Rockwell AN-2129 (2pp)

6 **"PL/M-80 Programming Manual"**
(8080, PL/M-80)
Provides in readable format a complete description of the PL/M language as implemented by the PL/M-80 compiler.
Intel $10.00 (134pp)

7 **"Partitioning a Basic-M Source Program"**
(XDOS)
Describes how to partition a source program into several separately compiled modules that can reside in ROMs in the final environment. Outlines user-program design constraints and illustrates the assembly routine for calling one module from another.
Motorola Semiconductor AN-813 (6pp)

8 **"Preparing an AIM 65 BASIC Program for PROM/ROM Operation"**
(R6500)
Describes a method of preparing a BASIC program for operation in a (P)ROM in the AIM 65. A program executing address DOOO-DFFF is illustrated, as are relocator and driver support programs.
Rockwell No. 241 (4pp)

9 **"Programming the MC1468705G2 Microcomputer EPROM"**
(MC1468705G2)
Provides information for programming early mask-set versions of this EPROM single-chip microcomputer. Includes a schematic diagram of a circuit with simple jumpering, which can be used when programming devices with any of the mask-set versions.
Motorola Semiconductor AN-907 (10pp)

Programming (cont)

10 **"R6500 Software Preparation System Development Configurations"**
(R65C02)
Introduces a low-cost development system for the R6500 family of CMOS CPUs. Four configurations are illustrated.
Rockwell AN-2166 (8pp)

11 **"S2000 Software Routines: Keyboard Entry, LED Display, Software Timing and Sound Generation"**
(S2000)
Describes software program that demonstrates capability of the S2000 single-chip MCU.
Gould AMI (8pp)

12 **"S2000/S2150 Single-Chip Microcomputer Positive BCD Integer Arithmetic Routines"**
(S2000/S2150)
Offers software routines for performing positive BCD integer arithmetic operations with the S2000/S2150 MCU.
Gould AMI (20pp)

13 **"SC/MP NIBL ROM Hardware Implementation"**
Shows the design of the RAM and ROM memories needed to implement National's Industrial Basic Language on the SC/MP LCDS.
National AN-204 (2pp)

14 **"Segmented vs Linear Addressing"**
(Z8000)
Compares two approaches used for addressing microprocessor memory: the segmented addressing method of the Z8000 and the linear addressing method of the 68000.
Zilog Microprocessor Applications Reference Book 3-65 (9pp)

15 **"Self-Programming the MC68701 and the MC68701U4"**
(MC68701, MC68701U4)
Explains how the MC68701/U4 EPROM versions of the M6801 microcomputer family can program themselves. Also describes a fully tested self-programmer including software and 1:1 artwork.
Motorola AN-906 (12pp)

16 **"Serial Clock Generation Using the Z8536 CIO"**
(Z80, Z8536)
Describes the use of a counter/timer I/O device for generating bit-rate clocks for asynchronous communications in a Z80-based system.
Zilog Microprocessor Applications Reference Book 2-103 (4pp)

17 **"Serial Communication with the Z80 DART"**
(Z80, Z8470)
Covers hardware and software considerations for using the Z80 DART, an IC that provides two independently programmable, asynchronous communication channels for a Z80-based system.
Zilog Microprocessor Applications Reference Book 2-87 (9pp)

18 **"Signetics Micro Assembler Reference Manual"**
(N3002, 8X02)
Describes this FORTRAN program developed as a design tool for writing microprograms. This microprogram defines its own assembly language, writes the microprogram, then assembles it to generate tapes to load memory. Program is suitable for most microprogrammed applications.
Signetics $4.00 (74pp)

Programming (cont)

1 **"Software Control of Microprocessor-Based Realtime Clock"**
(CDP1802)
Shows how to use software to implement a 12-hr clock, 4-yr calendar and a 12-hr elapsed time indicator with a microprocessor-based timing system.
RCA ICAN-6677 (9pp)

2 **"Starplex's "Submit Utility" Speeds Program Development"**
(Starplex)
Illustrates how the Submit utility program increases programming speed and accuracy.
National Semiconductor SB SPX-AP-8 (7pp)

3 **"The Z80 Family Interrupt Structure"**
(Z80)
Describes the Z80 interrupt structure, which includes one non-maskable and three software maskable interrupt modes. Provides flow charts, timing diagrams, and circuit diagrams.
Zilog Microprocessor Applications Reference Book 2-23 (12pp)

4 **"Using the Z80 SIO with SDLC"**
(Z80)
Covers the use of the Z80 SIO with synchronous data-link control communication protocol.
Zilog Microprocessor Applications Reference Book 2-71 (12pp)

5 **"Z8000 CPU Programmers Guide"**
(Z8000)
Demonstrates how the features of the Z8000 can be used to solve typical software problems. Specific programming techniques are offered, and a variety of complete programs are presented.
Zilog (54pp)

Systems

6 **"2670/71/72/73 CRT Set Application Briefs"**
(2670, 2671, 2672, 2673)
Gives details on a CRT terminal controller constructed from as few as 15 packages, including a standard microcomputer, memory, and an LSI chip set.
Signetics AN-403 (8pp)

7 **"80C86 Static Circuit Design Advantages"**
(80C86)
Explains the advantages of the CMOS 80C86 CPU and peripheral support circuits over the NMOS versions.
Harris DS-2 (1pp)

8 **"80C86 System Overview"**
(80C86)
Describes members of a CMOS family of chips consisting of a 16-bit CPU, programmable interval timer, programmable peripheral interface, priority interrupt controller, octal latch, clock generator and driver, and bus controller.
Harris DS-1 (5pp)

9 **"82C82 Eases Mixed System Design"**
(82C82)
Addresses 82C82 features that simplify system design, including its TTL-compatible input specifications, gated inputs, and consistent output load capacitance ratings.
Harris TB-48 (3pp)

Systems (cont)

10 **"A 16-bit Microprogrammable Bit-Slice Computer Design Using the GP001 CPU and GP502 Controller from the EPIC Family"**
(GP001, GP502)
Presents a practical implementation of microprogramming and bit-slice architecture using EPIC family parts. Discusses the use of development aids for hardware and software debugging.
RCA ICAN-7241 (17pp)

11 **"A CDP1800-Based CRT Controller"**
(CDP1800, CDP1809, CDP1870, CDP1876)
Discusses the application of the RCA two-chip video interface system to a CRT controller system.
RCA ICAN-7038 (8pp)

12 **"A Counter/Timer for COSMAC Systems"**
(CDP18S005, CDP18S007, CDP18S008)
Describes a counter/timer that can be built and used in conjunction with COSMAC development systems or any system using the COSMAC Microboard Universal Backplane. The counter/timer can be used to determine how much time a program is spending in a particular area of code.
RCA ICAN-6907 (8pp)

13 **"A Data Communications System Using an MC6809 MPU, MC68652 MPCC, and/or the MC68661 EPCI"**
(MC68009, MC68652, MC68661)
Describes hardware considerations for interfacing the MC68661 Enhanced Programmable Communications Interface and the MC68652 Multi-Protocol Communications Controller with the MC6809. Test software is included to illustrate the use of MC6809 instructions to operate both devices.
Motorola Semiconductor AN-839 (12pp)

14 **"A Guide to the Selection of Support Components for the Series 3000 Microprocessor"**
(N3001, N3002)
Categorizes the various components used to implement major sections of a typical microprocessor system.
Signetics AM-1 (4pp)

15 **"A Low-Cost MOS/LSI-Based "Smart" CRT Terminal"**
Offers a software listing for a low-cost smart terminal design using state of the art MOS/LSI circuits.
Standard Microsystems AN3-2 (16pp)

16 **"A Microcomputer System Bus Technical Comparison"**
Compares the VME bus and Multibus II, the VMX bus and iLBX II, and the VMS bus and iSSB. Covers protocols, arbitration, interrupt handling, and utilities.
Motorola Semiconductor BR172 (64pp)

17 **"A Minimal S6802/S6846 Systems Design"**
(S6802, S6846)
Presents a minimal prototyping system design using the devices.
Gould AMI AN-79-68-02 (3pp)

"A PROM Programmer for the SC/MP LCDS"
See listing under (Memory) PROMs (National)

18 **"A Programmer's Guide to the Z8 Microcomputer"**
(Z8)
This note describes the important features of the Z8, with software examples that illustrate its power and ease of use. Topics include accessing register, program, and external data memory, context switching, bit manipulations, stack operations, interrupts, timer/counter and I/O functions, and arithmetic routines.
Zilog Microprocessor Applications Reference Book 1-35 (25pp)

MICROPROCESSOR

Systems (cont)

1 **"A Simple High Speed Bipolar Microprocessor Illustrates System Design and Microprogram Techniques"**
(MC10801, MC10803)
Describes a complete bipolar LSI systems design using 10 ICs to perform 2's complement add, subtract, multiply and divide.
Motorola AN-774 (12pp)

2 **"A Slave CDP1802 Serial Printer Buffer System"**
(CDP1802)
Describes a CDP1802-based stand-alone line-printer buffer that links a master processor system to a serial printer through an RS232C interface.
RCA ICAN-6991 (8pp)

3 **"A Small Z8000 System"**
(Z80A, Z8002)
Outlines the hardware design implementation of a small computer using the Z8002 microprocessor, ROMs, EPROMs, dynamic RAMs, and parallel and serial I/O devices. The interface requirements of the Z8002 to memory and Z80A peripherals are described, with design alternatives given.
Zilog Microprocessor Applications Reference Book 3-17 (11pp)

4 **"A User's Guide to the Series 3000 Microprocessor Chip Set"**
(N3001, N3002)
Describes devices, instruction sets. Design examples included.
Signetics AM-2 (14pp)

5 **"A Z80-Based System Using the DMA with the SIO"**
(Z80A, Z80A-SIO)
Describes the use of the Z80A-SIO and Z80A-DMA hardware/software in a Z80-based system to transfer data to the SIO via the DMS.
Zilog. Microprocessor Applications Reference Book 2-35 (11pp)

6 **"AM2914 Priority Interrupt Encoder"**
(AM2913, AM2914, AM2900, 9080A)
Provides data sheet information on devices. Outlines construction of a microprogrammable, bipolar, LSI interrupt structure for the 2900 and 9080A processors using the 2914.
Advanced Micro Devices (33pp)

7 **"Advanced Architectural Features of the Z8000 CPU"**
(Z8000)
Describes the organization, memory use, interrupt and trap handling, instructions, and data capabilities of the Z8000 family of microprocessors.
Zilog Microprocessor Applications Reference Book 3-3 (14pp)

8 **"An Introduction to the Z8010 Memory Management Unit (MMU)"**
(Z8010-MMU)
Examines the uses of memory management in computer systems, and explains how the Z8010 MMU supports the Z8001 processor in the use of its large address space.
Zilog Microprocessor Applications Reference Book 3-29 (19pp)

9 **"An M6800 Clock System That Handles DMA and Memory Refresh Cycle Stealing"**
(MC6800, MC6875)
Presents a method for stealing cycles from the MPU for DMA transfers, refreshing memory through cycle stealing, and also providing refresh to an MC6800 dynamic MPU after each cycle stolen. Block diagrams included.
Motorola AN-787 (6pp)

Systems (cont)

10 **"An Optimizing Driver for NEC Spinwriter and Diablo Printers"**
Presents a driver program for NEC and Diablo full character printers. Prepared as a companion to the ZFORM text formatting utility program, it nevertheless suits a variety of applications, especially those for printing long lines of text as in business-oriented data base management systems.
Zilog Microprocessor Applications Reference Book 6-3 (56pp)

11 **"Analog Input/Output for Microprocessors Made Easy"**
(MP10, MP11, MP20, MP21)
Outlines features of devices and describes various ways each can be handwired to suit user configurations. Includes block diagrams of hookups with SC/MP, Z80, F8, 6800, 8080, 8085 and 9002 MPUs as well as discussion of memory mapped vs. accumulator I/O.
Burr Brown AN-87 (6pp)

12 **"Application Memo to Control Store Sequencer 8X02"**
(8X02)
Presents a functional description and gives microprogramming system suggestions.
Signetics Bipolar Application Memo 3 (7pp)

13 **"Application Technique for the 2651 PCI"**
(2651)
Shows application techniques for the 2651 programmable communications interface.
Signetics M26 (2pp)

14 **"Applying the Z80 SIO in Asynchronous Data Communications"**
(MK3884)
Describes the operation of the Z80-SIO in serial asynchronous data links. Programming examples are given for initialization, data transfer and error detection and recovery.
Mostek 1982/83 Z80 Designers Guide V-23 (6pp)

15 **"Architectural Concepts for Microprocessor Peripheral Families"**
(Z8038, Z-SCC)
Discusses local buses as a way of overcoming the constraints of limited available signal lines in 16-bit processors. Focuses on the use of an intelligent FIFO I/O device in a high-speed parallel/serial front-end processor for a high-end microcomputer system.
Zilog Microprocessor Applications Reference Book 3-105 (3pp)

16 **"Basic Microprocessors and the 6800"**
(MC6800)
Introduces microprocessor basics and the M6800 microcomputer system including details of the hardware addressing modes, system configuration, and instruction set. Supplies programming examples complete with flow charts, source program, and assembled output.
Motorola $12.90 (272pp)

17 **"Benefits of Demand Page Virtual Memory"**
(TI32000 family)
Virtual memory is a viable memory management alternative to overlay procedures when using secondary storage. This note covers virtual memory as implemented in the TI32000 system.

MICROPROCESSOR

Systems (cont)

1 **"Bit-Slice Microprocessor Design Takes a Giant Step Forward with "Schottky-Coupled-Logic" Circuits"**
(IDM2900)
Covers a four-bit slice Schottky-coupled-logic design that combines the flexibility of the industry standard 2900 microprocessor architecture with advanced LSI processing.
National Semiconductor AN-203 (12pp)

2 **"Build Your Own Microprocessor-Based Data Distribution System"**
Covers the selection of D/A converters and the logic design for interfacing the converters to a microprocessor's data, address, and control buses.
Micro Networks AN203 (6pp)

3 **"Buildiing an Inexpensive but Powerful Color Terminal"**
(N5455)
Describes a simple, low-cost approach to add color capabilities to the N5455 Terminal Management Processor.
National Semiconductor AN-374 (6pp)

4 **"CDP1800-Based Video Terminal Using the RCA Video Interface System, VIS"**
(CDP1800, CDP1869, CDP1870, CDP1876)
Discusses the application of the RCA Video Interface System to video terminals, industrial displays and broadcast-TV text overlays. Describes hardware and software implementation. Includes schematics, block diagrams, flowcharts, and VIS operating system listing.
RCA ICAN-7032 (36pp)

5 **"CDP1800-Series Multiprocessing for Maximum Performance"**
(CDP1800)
Discusses the mechanics of multiprocessing and gives practical examples of how a CDP1800 CPU can be used in the realm of intelligent control.
RCA ICAN-7079 (10pp)

6 **"CDP1800-Series Peripherals—Building Blocks of a Complete Processor Family"**
(CDP1800)
Discusses an array of auxiliary chips that make available to the system designer the functions and performance levels that were once only achievable with NMOS.
RCA ICAN-7023 (8pp)

7 **"CDP1802-Based Designs Using the 8283 Programmable Counter/Timer"**
(CDP1802)
Describes methods by which the 8283 programmable counter/timer can be incorporated in RCA COSMAC-based microprocessor systems (CDP1802)
RCA ICAN-6693 (4pp)

8 **"CDP1804 and CDP1805 Processors Improve System Performance and Lower Chip Count"**
(CDP1804, CDP1805)
Describes the use of the CDP1804 and CDP1805 processors in extending the capability of the CDP1802, both in higher performance and additional system functions, while maintaining upward software and hardware compatibility.
RCA ICAN-6957 (6pp)

9 **"CMOS User 65 System 65 Development System"**
(R65C00)
Describes the use of the System 65 development system, equipped with a buffer module, for emulating the R65C00 family of CMOS microprocessors.
Rockwell AN-2158 (6pp)

Systems (cont)

10 **"CRT9028 VTLC: A New Video Terminal Logic Controller"**
(CRT9028)
The 9028 CRT controller reduces additional control electronics requirements for a CRT terminal to as few as to five to ten ICs. Describes a typical display system configuration and includes discussions of video timing, display formatting, and display memory access.
Standard Microsystems TN4-5 (6pp)

11 **"Cassette Tape I/O for COSMAC Microprocessor Systems"**
(CDP18S020, CDP18S024, CDP18S025, CDP18S005, CDP18S007, CDP18S691)
Describes circuit and software for adding cassette-tape I/O to the COSMAC evaluation kit and development system, or the Microboard prototyping kit.
RCA ICAN-6934 (4pp)

12 **"Clock-Hold Schemes for the IMP Microprocessor Family"**
(IMP-8C, IMP-16C)
Presents scheme to extend the clock-hold function for additional periods of the main system clock, using the DM8570 shift register.
National AN-105 (4pp)

13 **"DMA Interconnection to the 8003 EDLC"**
(8001, 8003)
Discusses DMA design considerations in an Ethernet node for achieving the right balance between cost and performance, flexibility and simplicity for different system requirements.
SEEQ AN-6 (7pp)

14 **"DP8400/8409 Error Correcting Dynamic RAM Memory System for the Series 32000"**
(NS32016, DP8400, DP8409, DP8419)
Describes an error correcting memory system for the Series 32000 microprocessors using three programmable logic arrays to interface between the NS32016, DP8409 and DP8400.
National Semiconductor AN-387 (16pp)

"Data Acquisition System Interface to Computers"
See listing under (Interface) Converters (National)

15 **"Debugging a 32032 Based System with an ISE/16"**
(32032)
Explains how an ISE/16 and simple adapter can be used to debug a 32032-based system.
National Semiconductor AN-396 (8pp)

16 **"Design Considerations for the Ethernet Node"**
(AmZ8001, Am7990, Am7991)
An introduction to Ethernet, covering software support, system interfacing, initialization, diagnostics, interrupt service latency, and transmit/receive driver routines.
Advanced Micro Devices Analog and Communications Products Data Book (14pp)

17 **"Design of Clock Generators for Use with RCA COSMAC Microprocessor"**
(CDP1802)
Describes a crystal controlled clock generator using on-chip circuits and crystal and RC generators using external circuits.
RCA ICAN-6565

18 **"Designing Microcomputer Systems for Electrically Noisy Environments"**
Describes some electrical noises and noise environments. Reviews design techniques that reduce noise susceptibility, including layout, power supply distribution and decoupling, and shielding and grounding techniques. Automotive and ESD environments are emphasized.
Intel AP-125 (24pp)

MICROPROCESSOR

Systems (cont)

"Device Operation and System Implementation of the Asynchronous Communications Interface Adapter MC6850"
See listing under (Interface) Data Transmission (Motorola)

1 **"FDC9216 Floppy Disk Data Separator"**
(FDC9216)
Explains the functions of a data separator and the theory of operation of the FDC 9216/B. FM and MFM encoding schemes are illustrated, as are two system configurations using the 9216: one with the FDC 179X floppy disk formatter controller; one with the NEC 765 floppy disk controller. Includes test results for the 9216 used with 5¼-inch and 8-inch floppy disk drives.
Standard Microsystems TN6-1 (11pp)

2 **"Fine Tuning the ALU Carry Path"**
(DM74S182)
Provides a look at higher speed look-ahead carry techniques. Covers four basic methods (ripple carry, single level, multilevel, shifted) and examines factors affecting choice of technique.
National AN-230 (7pp)

3 **"Floppy Disk Controller"**
(8X330)
Describes hardware and software of a floppy-disk controller design that demonstrates the capabilities of the 8X330 floppy disk formatter/controller.
Signetics

4 **"Floppy Disk Drive Controller Design Considerations Using the MB8876A/MB8877A"**
(MB8876A, MB8877A)
A comprehensive description of the MB8876A and MB8877A floppy disk drive controllers, including interfaces registers, register selection, error detection, command structure, formatting techniques, encoding, and write precompensation.
Fujitsu Microelectronics AN-002 (18pp)

5 **"General Purpose Interface Adapter"**
(S68488)
Defines limitations and characteristics of a general-purpose interface adapter and discusses software considerations for interfacing with the IEEE488-1978 standard instrument bus.
Gould AMI (3pp)

6 **"Generating Non-Standard Baud Rates with R6551"**
(R6551)
Describes how the R6551 can be used to generate baud rates other than 15 selectable ones specified for the device.
Rockwell Document No. 6500 No. 3 (2pp)

7 **"How to Simplify Design Integration of Microprocessor-Based Systems Using the Event Monitor System"**
(ES-SERIES)
Describes use of the ES Series Emulator to diagnose and debug complex integration problems. Several sample problems are given.
Applied Microsystems Corp. (9pp)

8 **"IDM2901A File Expansion Using the DM85S68"**
(DM85S68, IDM2901A)
Discusses file expansion for the μP using a register array.
National Memory Applications Handbook (1pp)

9 **"IMP-16L DMA—What It Is and How to Use It"**
(IMP-16)
Discusses general theory of the DMA Bus, gives examples of priority expansion and data transfer.
National AN-135 (6pp)

Systems (cont)

10 **"Increasing the Number of Control Flags and Jump Conditions in the IMP-16C"**
(IMP-16C)
Describes simple and economical method of increasing the number of testable jump conditions and the number of control flags on the IMP-16C microprocessor.
National AN-101 (4pp)

11 **"Intel Multibus Interfacing"**
Provides an overview of the Multibus system bus, including an examination of bus signals, operating characteristics, and interface circuits. A complete description of a slave design example is included.
Intel AP-28A (39pp)

12 **"Interface Techniques for the 2651 PCI"**
(2651)
Covers interfacing the 2652 programmable communications interface with the SC/MP, Z80, 8085, and 6800 microprocessors.
Signetics M22 (8pp)

13 **"Interfacing Mostek's MDX-PIO to OPTO-22's PB24"**
(MDX-CPU2, MDX-PIO)
Shows how to interface a microcomputer system to an OPTO-22 PB24, a 24-channel I/O panel using solid-state relays.
Mostek Applications Brief (8pp)

14 **"Interfacing the 8001/8003 EDLC to a 16-Bit Bus"**
(8001, 8002, 8003)
Explains the data link and physical layers of the Ethernet protocol as implemented by an Ethernet data link controller chip and a Manchester code controller chip.
SEEQ AN-5 (7pp)

15 **"Low Cost Crystal Oscillator for Clock Input"**
(R6500)
Describes a low cost oscillator circuit which produces the baud input frequency required by the clock generator circuits in the R650X series microcomputers. The circuit uses one of two readily available low cost crystals. Circuit diagram.
Rockwell Document No. 1 (1pp)

16 **"Low-Cost, High-Performance Token Pass LAN Controller"**
(COM9026)
Describes operation of the COM9026, an ARCNET controller chip that makes network configuration and reconfiguration completely transparent to a host. Includes a comparison of ARCNET and ETHERNET networks.
Standard Microsystems TN5-6 (9pp)

17 **"Low-Power System Design with Harris CMOS 80C86 Products"**
(80C86)
Shows how the 80C86 family of CMOS ICs helps eliminate the need for pull-up resistors.
Harris DS-3 (2pp)

18 **"Low-Power Techniques for Use with CMOS CDP1800-Based Systems"**
(CDP1800)
Describes techniques for reducing the power requirements of microcomputer systems.
RCA ICAN-7029 (6pp)

MICROPROCESSOR

Systems (cont)

1 **"M6800 Systems Utilizing the MC6875 Clock Generator/Drive"**
(MC6875)
Gives extensive design examples using the MC6875 in systems including slow or dynamic memories, and DMA (multiprocessor) applications.
Motorola AN-775 (20pp)

2 **"MC14500B Development System"**
(MC14500B)
Describes the design and construction of an easy-to-use development system that provides keyboard data/address entry, wide supply voltage range, seven-segment readout, and accommodation of 256 program steps.
Motorola AN-889 (8pp)

3 **"MC6801/03 Port Expansion"**
(SN74LS374, MC6821, SN74LS163, SN74LS154, SN74LS175, SN74LS377, SN74LS165)
Shows various methods for expanding I/O capability of the MC6801/03 microcomputers using various peripheral chips.
Motorola AN-797 (8pp)

4 **"MCS-51 Microcomputer User's Manual"**
(8051, 8751, 8031)
Describes system architecture, instruction set and software; includes applications examples and data sheets.
Intel (448pp) $7.50

5 **"MCS-85 User's Manual"**
(8085, MCS-85)
Describes this 8085 based system and peripheral components. Extensive coverage through data sheets.
Intel $5.00 (273pp)

6 **"MIL-STD-1553A and MIL-STD-1553B Overview"**
(COM1553, COM1553B)
A tutorial note on the DOD's Aircraft Internal Time Division Command/Response Multiplex Data Bus communications protocol. Includes a brief description of two VLSI ICs that implement the protocol.
Standard Microsystems TN5-3

7 **"MM58167A Real Time Clock Design Guide"**
(MM58167A)
Covers operating issues of a real-time 24-hour clock, including hardware interface to microprocessors, calibration techniques, software and battery backup.
National Semiconductor AN-353 (18pp)

8 **"MN1400 Series 4-Bit One-Chip Microcomputers User's Manual"**
(MN1400, MN1402, MN1498, MN1499)
Introduces the MN1400 family. Encompasses system architecture, timing, and the instruction set including examples of various commands and routines.
Panasonic (65pp)

9 **"Memory Management Techniques Using the MC6829"**
(MC6829, MC6809)
Describes an MC6809-based system in which an MC6829 memory management unit is used to increase the memory capacity of the system to a maximum of 2M bytes. With the mapping RAM technique described, data can be written to sequential addresses that correspond to the upper N bits of an expanded address. Includes block diagrams, timing diagrams and tables.
Motorola Semiconductor AN-859 (48pp)

Systems (cont)

10 **"Microcomputer Applications Handbook"**
Provides application hardware and software information for the entire microcontroller line, which includes both the MCS-48 and the MCS-51 families.
Intel $7.50

11 **"Microprocessor Systems Handbook"**
Explains μP hardware, the interaction of hardware and software, and the interfacing of μP's with A/D and D/A converters. Topics covered include memory addressing, I/O operations, and applications of various microprocessors.
Analog Devices $9.50 (218pp)

12 **"Minimum System Design TMS 9900 16-Bit Microprocessor"**
(TMS9900)
Explains system design, system performance, and minimum system configuration.
Texas Instruments Application Report CA-184A (7pp)

13 **"Minimum System Design with the S9900 16-bit Microprocessor"**
(S9900)
Describes device and basic system configuration. Includes timing and block diagrams.
Gould AMI AN-79-99-02 (6pp)

14 **"Monitor for the MC146805G2L1 Microcomputer"**
(MC146805G2L1)
The MC146805G2L1 ROM contains a monitor routine that provides the user with the ability to evaluate the microcomputer using a standard RS232 terminal. The user can enter short programs into the on-chip RAM and execute them via the monitor. A description of the monitor program is given along with an assembled listing of the actual program.
Motorola Semiconductor AN-852 (16pp)

15 **"Multi-Processor Controller Using the MC6809E and the MC68120"**
(MC6809E, MC68120)
Two alternatives for providing additional throughput in developing any microprocessor system include single processor and multi-processor. This note investigates both alternatives and describes a basic multi-processor system.
Motorola Semiconductor AN-850 (20pp)

16 **"N8080 System Design Manual"**
(INS8080A, DP8212, DP8216, DP8224, DP8226, DP8228, DP8238, INS8251, INS8255)
Describes the INS8080A μP including architecture, timing, data and instruction representation, and I/O operation and control. Also covers use of various support chips.
National $5.00 (72pp)

17 **"New CMOS CDP1800-Series Processors Enhance System Performance"**
(CDP1800)
Reviews the features of the CDP1800 Series processors and discusses the attributes of the CDP1804 and CDP1805 microprocessors.
RCA ICAN-6971 (6pp)

18 **"New CMOS CDP1800-Series Processors Reduce Chip Count"**
(CDP1800, CDP1804)
Combining CPU, memory, and peripheral functions on a single chip, the CDP1804/1805 can provide a compact system design along with battery operation.
RCA ICAN-6968 (4pp)

MICROPROCESSOR

Systems (cont)

1 **"Next Generation CRT Systems"**
(CRT9007, CRT9006, CRT9212, CRT9021)
Enumerates the benefits brought to new-generation CRT systems by a video processor and controller, single- and double-row buffer, and a video attributes controller. Schematics for typical configurations are given, and various operating and addressing modes are described.
Standard Microsystems AN4-4 (23pp)

2 **"Number Cruncher (MM57109) Interface to Microprocessor"**
(MM57109)
Describes the MM57109 number cruncher unit which can perform most arithmetic functions found in complex hand-held calculators and interfaces either to a microprocessor or a random logic system. Provides schematics of interface logic and a flow chart for initialization of the device.
National AN-186 (10pp)

3 **"Optimizing Hardware/Software Trade-Offs in RCA CDP1802 Microprocessor Applications"**
(CDP1802)
Presents examples of processor interfaces that minimize external hardware and through programming techniques, minimize speed requirements on the CPU.
RCA ICAN-6704 (10pp)

4 **"Optimizing the iRMX 86 Operating System Performance on System 86/310 and System 86/330"**
(iRMX 86, 86/310, 86/330)
Identifies system configuration options that will improve the overall performance of an operating system at the human interface level. Issues covered include loader buffers, volume granularity of devices, BIOS buffers, device interleave factor, and performance testing.
Intel AP-174 (28pp)

5 **"Peripheral Components for Microcomputers"**
(U250B, U265B, U427B, U180M, U327M, U328M, U338M, U340M, U3040M, U3042M, U3060M, U3070M, U3082M)
Discusses peripheral ICs designed for use with single-chip microcomputers.
AEG-Telefunken SI 6.81 (3pp)

6 **"Power-On Reset/Run Circuits for the RCA CDP1802 COSMAC Microprocessor"**
(CDP1802)
Provides diagrams and discussion of several circuits which enable a power-on reset/run capability for the device.
RCA ICAN-6581 (2pp)

7 **"Product Capabilities Manual"**
(8X300)
Describes the capabilities of the 8X300 microcontroller family in high-speed applications, including computer peripherals, industrial controllers and telecommunications.
Signetics

8 **"Programming and Interfacing to the CRT 9007 VPAC"**
(CRT9007)
Worksheets and schematics are provided for implementing a video terminal using the CRT9007 video processor and controller.
Standard Microsystems AN4-5 (21pp)

9 **"R6531 Address Lines for Contiguous ROM"**
(R6502, R6531)
Describes an 8-bit μC system using seven R6531's (ROM-RAM-I/O-Counter) and a single R6502. The ROMs are designed to be a contiguous block extending from highest address down. Supplies diagrams and table for address line selection.
Rockwell Document No. R6500 No. 6 (2pp)

Systems (cont)

10 **"Register-Based Output Functions for RCA COSMAC Microprocessors"**
(CDP1802, CDP1852)
Describes circuits using the CDP1852 I/O port for outputting information from any of the 16 general purpose scratch pad registers of the CDP1802 microprocessor.
RCA ICAN-6562

11 **"S2000 Family Extended Memory Implementation"**
(S2000)
Shows four method for connecting external memory to members of the S2000 single-chip microcomputer family.
Gould AMI AN-79-2K-01 (3pp)

12 **"SCC in Binary Synchronous Communication"**
(Z8030)
This note examines the implementation of a communications controller in binary synchronous mode with a Z8002 CPU acting as a controller for the Z8030 serial communications controller.
Zilog (10pp)

13 **"Serial I/O, Timer, and Interface Capabilities of the MC68901 Multifunction Peripheral"**
(MC68901)
Illustrates a system utilizing several functions of the MC68901, including USART serial I/O, internal timers to generate a serial I/O baud rate and external interrupts, and general-purpose I/O pins to provide a cassette interface.
Motorola AN896 (10pp)

14 **"Single Chip Multiprocessor Arbiter"**
Describes use of Signetics' Field Programmable Logic Sequencer to provide a convenient and cost effective means for implementing a synchronous arbiter, to control system communication with peripherals, by a single chip.
Signetics AN-007 (8pp)

15 **"Smooth Scrolling with the SCN2675"**
(SCN2674)
Discusses the importance of smooth scrolling and the use of the SCN2674 advanced video display controller for offloading the function from a CPU. Illustrates both single- and dual-region scrolling applications.
Signetics AN-404 (8pp)

16 **"Software Conversion of Analog Outputs to Analog Inputs"**
(MP10, MP11)
Discusses using the devices as an analog input system with diagrams illustrating hookups to the 6800 and 8080. Includes software program for each processor as well.
Burr Brown AN-88 (4pp)

17 **"Software Design for Microprocessors"**
(SBP0400, TMS1000, TMS5501, TMS8080, TMS9900)
Presents basic microprocessor fundamentals. Includes such topics as basic terms, basic machine architecture, instruction sets, and programming. Sample design problems are examined.
Texas Instruments $12.50 (385pp)

18 **"TI32000 Interface to the TI32081 Floating Point Unit"**
(TI32081)
After providing a brief tutorial on floating point concepts, this note examines internal structure, architecture, programming, and instruction set of the TI32081 Floating Point Unit.
Texas Instruments (8pp)

MICROPROCESSOR

Systems (cont)

1 **"TMP Extended Program Memory Application"**
(NS455)
Describes methods for expanding the program memory of the NS455 series Terminal Management Processor (TMP) and discusses software techniques for efficient utilization of the expanded memory. Also describes a video memory address circuit that switches between two or more 8k memory arrays.
National Semiconductor AN-399 (6pp)

2 **"TMP Extended Program Memory Application Note"**
(NS455)
Describes methods for expanding the program memory of the NS455 series Terminal Management Processor (TMP) and discusses software techniques for efficient utilization of the expanded memory. Also describes a video memory address circuit that switches between two or more 8k memory arrays.
National Semiconductor AN-399 (6pp)

3 **"TMS 5501 I/O in TMS 8080A μP Systems"**
(TMS5501, TMS8080A)
Describes operation and use of this input/output controller.
Texas Instruments Application Report CA-185A (18pp)

4 **"TMS9900 Family System Design Manual"**
(TMS9900)
Covers the general operation of TI's TMS9900 16-bit family of microprocessors and peripheral support devices.
Texas Instruments Application Report MP702 (120pp)

5 **"The AM9511/12 Floating Point MPU"**
(AM9511, AM9512)
Discusses device features and command set. Outlines algorithm and error that can be expected from its use.
Advanced Micro Devices (21pp)

6 **"The Bisync Protocol and a Bisync Data Link Between Two MC68000 MPU Based Systems"**
(MC68000, MC68661, MC2661, MC68652, MC2652, MC68653, MC2653)
Describes the hardware and software required to implement a Binary Synchronous Communications (BISYNC) data link between two MC68000 based systems. Includes circuit diagrams and flow charts.
Motorola Semiconductor AN-882 (34pp)

7 **"The M10800 MECL LSI Processor Family—Three Descriptive Articles"**
(MC10800, MC6800)
Presents three articles about the device: "Get the Best Microprocessor Performance"; "The MSP: GTE Sylvania's Microsignal Processor"; "M10800 Microprogrammed Demonstrator". The first examines features of the processor; the second discusses a customer application; and the third describes a demonstrator treated as a peripheral to the M6800 system.
Motorola AN-776 (21pp)

8 **"The MM58174A Real Time Clock in Battery Backed-Up Design Provides Reliable Clock and Calendar Functions"**
(MM58174A)
Explains how to interface the MM58174A real time clock to microprocessors with battery-backed circuits. Includes functional circuit description, troubleshooting tips, and crystal oscillator adjustments.
National Semiconductor AN359 (80pp)

Systems (cont)

9 **"Throughput Considerations in NS455 System Planning"**
(NS455)
The NS455 is a complete video controller that reads in video data, processes it and outputs it to a CRT. The intricate timing relationships inherent in video generation require that a designer have a firm grasp of the fundamentals of NS455 operation to achieve his design objectives. This note discusses the key facets of NS455 operation.
National Semiconductor AB-14 (2pp)

10 **"Timing in an Interrupt-Based System with the Z80 CTC"**
(Z80-CTC)
Details both continuous time-interval operations and single-interval operations performed by the Z80-CTC in a Z80-based system.
Zilog Microprocessor Applications Reference Book 2-107 (11pp)

11 **"Understanding and Using the CDP1855 Multiply/Divide Unit"**
(CDP1855)
Shows how the use of hardware can eliminate complex and slow software routines for performing arithmetic and signal-processing algorithms in 8-bit microprocessor systems.
RCA ICAN-6970 (11pp)

12 **"Use of CMOS RAM CDP1824 with RCA Microprocessor Evaluation Kit CDP18S020"**
(CDP1824)
Describes the CDP1824 and its application in the CDP18S020 Evaluation Kit, and presents examples of how the CDP1824 can be combined with the CDP1831 ROM to form efficient ROM-RAM systems.
RCA ICAN-6537 (4pp)

13 **"Use of CMOS ROMs CDP1831 and CDP1832 With the RCA Microprocessor Evaluation Kit CDP18S020"**
(CDP1831, CDP1832)
Describes the operation and design of CDP1831- and CDP1832-based read-only memory systems in the CDP18S020 Evaluation Kit.
RCA ICAN-6536 (4pp)

14 **"Use of CMOS-SOS RAM CDP1822 with RCA Microprocessor Evaluation Kit CDP18S020"**
(CDP1822)
Describes the CDP1822, its operation, and its application in the CDP18S020 Evaluation Kit.
RCA ICAN-6539 (4pp)

15 **"Use of the CDP1856 and CDP1857 Buffer/Separator in CDP1802 Microprocessor Systems"**
(CDP1802, CDP1856, CDP1857)
Describes use of the CDP1856 and CDP1857 four-bit buffers or separators in the CDP18S020 Evaluation Kit and CDP18C024 E-K/Assembled-Editor Design Kit. Includes functional diagrams.
RCA ICAN-6657 (4pp)

16 **"User Manual for the CDP1802 COSMAC Microprocessor"**
(CDP1802)
Describes the device architecture and its instruction set with examples of each command. Reviews basic programming techniques and supplies timing diagrams.
RCA MPM-201B $5.00 (115pp)

17 **"User's Manual for 8X305 Controller"**
(8X305)
Provides hardware/software details pertaining to the 8X305 microprocessor and its family of supportive parts with emphasis on timing, programming and system interface.
Signetics

MICROPROCESSOR

Systems (cont)

1 **"Using Low-Cost 1 MHz Peripherals in a 2 MHz System with the MC68B09 and the MC68B09E"**
(MC68B09, MC68B09E)
Discusses how to minimize system cost by manipulating 2 MHz MPU access time to accommodate slower peripherals and memories.
Motorola Semiconductor AN-836 (7pp)

2 **"Using NSC-800 & 8085 ISE as Automatic Test Equipment"**
(Starplex)
Discusses techniques for using a microprocessor development system and in-circuit emulators for functional tests on production systems.
National Semiconductor SA SPX-AP-7 (16pp)

3 **"Using SCC with Z8000 in SDLC Protocol"**
(Z8030, Z8000)
Outlining the basics of the SDLC communications protocol, this note explains how to use the Z8030 SCC with a Z8000 CPU to implement an SDLC controller.
Zilog (12pp)

4 **"Using the 2651 with BISYNC"**
(2651)
Details how the 2651 PCI supports IBM's Binary Synchronous Communications protocol.
Signetics M24 (4pp)

5 **"Using the COM8004 for High Data Integrity in Bit-Oriented Protocols"**
(COM8004)
Describes the advantages of the COM7004's 32-bit generating polynomial in cyclic-redundancy-check schemes for error detection in bit-oriented protocols.
Standard Microsystems TN5-1 (5pp)

6 **"Using the COM9026 Local Area Network Controller and the COM9032 Local Area Network Transceiver"**
(COM9026, COM9032)
Presents schematics and the information required to implement the clock generator and cable transceiver for the COM9026 LAN controller. Includes a discussion of transmission media and network topology.
Standard Microsystems TN5-2 (12pp)

7 **"Using the COSMAC Microboard Battery-Backup RAM, CDP18S622"**
(CDP18S622)
Describes circuits, operation and application of an 8-kbyte, CMOS RAM board with on-board rechargeable batteries.
RCA ICAN-6955 (5pp)

8 **"Using the CRT8002 in a Color Display Terminal"**
(CRT8002)
Describes how the CRT 8002 video display-attributes controller, a 2-1 multiplexer, and a pair of octal latches can be used to convert existing monochrome terminal designs for use with eight-color terminals.
Standard Microsystems AN2-2 (2pp)

9 **"Using the MK3807 VCU in a Microprocessor Environment"**
(MK3807)
The MK3807 is a programmable CRT video control unit with the logic functions required to generate all the timing signals for the formatting and presentation of interlaced or noninterlaced video data on standard and nonstandard CRT monitors. This note describes application examples for 80-character by 24-row, 40-character by 12-row, and 256-pixel by 256-pixel graphic displays.
Mostek 1982/83 Z80 Designers Guide V-29 (19pp)

Systems (cont)

10 **"VIS—A Commercially Competitive CRT Controller Chip Set"**
(CDP1802, CDP1869, CDP1870, CDP1876)
Gives an industry-wide comparison of various CRT controllers, and discusses the application of the RCA two-chip video interface system to CRT display applications.
RCA ICAN-7067 (4pp)

11 **"VLSI Circuit Provides Complete Controller for Token-Pass Systems"**
(COM9026)
A discussion of local area network issues and the COM9026 LAN controller chip. Topics include line and network protocols, network configuration and topologies, and the 9026-to-microprocessor interface.
Standard Microsystems TN5-5 (7pp)

12 **"Z-Bus Component Interconnect"**
(Z8000)
Describes the Z-Bus, a high-speed parallel shared bus that links components of the Z8000 family, and discusses bus signals, timing transactions, and interrupts.
Zilog Microprocessor Applications Reference Book 5-3 (15pp)

13 **"Z8 Family Software Framing Error Detection"**
(Z8600)
Describes a simple, low-overhead software method for detecting framing errors in the Z8600 UART microcomputer.
Zilog Microprocessor Applications Reference Book 1-33 (2pp)

14 **"Z80 Interfacing Techniques for Dynamic RAM"**
(Z80, MK4027, MK4116)
Provides specific examples of interfacing 16-pin dynamic memories to the Z80 microprocessor. Includes timing diagrams and refresh information.
Mostek

15 **"Z80 Memory Expansion for the Z800"**
(Z80, Z800)
Describes a way for the Z80 user to increase memory addressing space to 16Mb and incorporate memory protection features while maintaining object code compatibility with application software.
Zilog (12pp)

16 **"Z8000 vs. 68000: Introduction"**
(Z8000)
Outlines the similarities and differences of the Z8000 and 68000 CPUs.
Zilog Microprocessor Applications Reference Book 3-57 (2pp)

17 **"Z8000 vs. 68000: Operating System Support Features"**
(Z8000)
This note explains the importance of operating system support features in microprocessors, and contrasts the design of the Z8000 and 68000 in this area.
Zilog Microprocessor Applications Reference Book 3-75 (9pp)

18 **"Z8000 vs. 68000: Register Architecture"**
(Z8000)
Discusses the different approaches of the Z8000 and 68000 to register architecture: general purpose vs. special purpose registers, pairing vs. telescoping of subregisters, and extensibility of register sets.
Zilog Microprocessor Applications Reference Book 3-59 (2pp)

MICROPROCESSOR

Systems (cont)

1 **"Z8016 Z8000 DTC DMA Translation Controller"**
(Z8016)
Describes the advantages of a DMS transfer controller in high-speed data processing, and explains the interface to Z8000 and 8086 CPUs, as well as peripheral devices.
Zilog (26pp)

2 **"Z8530 and Z8030 SCC Initialization: A Worksheet and an Example"**
(Z8530, Z8030)
This note describes the software initialization procedure for the Z8530 and Z8030 serial communications controllers. In a sample program, the Z8000 initializes the Z8530 for asynchronous operation.
Zilog (8pp)

Systems (cont)

3 **"Z8671 Seven Chip Computer"**
(Z8671)
The Z8671 is a Z8601 single-chip microcomputer with a Basic/Debug Interpreter and Debug monitor preprogrammed into 2 Kbytes of on-chip ROM. This note describes the design of a low-complexity board that runs the interrupter and monitor with an external 4K RAM and 2K ROM.
Zilog (7pp)

MICROCOMPUTER BOARDS

Applications

1 **"A Microcomputer Industrial Control Interface Using I/O Modules"**
(TM990)
Describes Industrial Control Systems with TM990 Microcomputer Modules and 5MT ac/dc Input/Output Modules.
Texas Instruments Application Report MP 716 (20pp)

2 **"Designing Floppy Disk Systems (and a Sample CP/M Implementation)"**
(BLC-8221, BLC-8222)
Reviews theory of floppy-disk operation and describes how to use a floppy-disk drive with intelligent controller boards.
National Semiconductor SA4-8221/22 (54pp)

3 **"Introduction to Microprocessors"**
(TM990/u89)
This microprocessor textbook, based on the TM990/u89 University Board, provides an introduction to microcomputers and assembly language programming. Includes many program examples illustrating instructions, programming techniques, and I/O interfacing.
Texas Instruments (MPB30 Rev.*) $19.95 (570pp)

4 **"Microboard Equipment Control"**
(18S02, CDP18S641, CDP18S644, CDP18S661, CDP18S693)
Describes the use of RCA Microboards in specialized manufacturing-test equipment.
RCA ICAN-7026 (6pp)

5 **"RSC-FORTH Development Board"**
(R65F11, R65F12, F65FR1)
A description and schematic for an RSC-FORTH single-chip microcomputer development board. A PC board layout is also provided, including RS-232 and floppy disk drive interfaces.
Rockwell No. 2162 (12pp)

6 **"Reentrant Programming"**
(TM990)
Describes the use of reentrant software to eliminate the need for providing separate copies of common subroutines for concurrently executing tasks.
Texas Instruments (6pp)

7 **"Scout Naked Mini 4/04"**
Describes the Scout Computer System incorporating the Naked Mini 4/04 processor. Discusses the basic machine, I/O and peripheral devices, and system software.
Computer Automation (272pp)

Applications (cont)

8 **"Software Development Using TM990/302 SDB and TIMBER"**
(TM990)
Covers the development of TM990 Series software with a TM990/302 Software Development Module, and TIMBER, a ROM-based executive program.
Texas Instruments Applications Report MP712 (92pp)

9 **"TM990 Analog Modules Applications Report"**
(TM990)
Describes the general operation of the TM990 Serial Analog modules and the software necessary for control.
Texas Instruments Applications Report MP714 (54pp)

10 **"TM990 Microcomputer Handbook"**
(TM990)
Describes the technical features of the TM990 product line. In addition to CPU, Memory and I/O Interface Modules, the book discusses software products, development systems, the TM99 System Bus, and customer support services.
Texas Instruments (207pp)

11 **"TM990/101M EIA Communications Link"**
(TM990)
Describes the development of a software communications link between the TM990 board, a host computer, and an EIA RS232 interface for software development.
Texas Instruments Applications Report MP705 (52pp)

12 **"Z8002 CPU Small Single Board Computer"**
(Z8002)
This note describes a demonstration system built around the Z8002 and Z-Bus peripherals.
Zilog (13pp)

13 **"iSBC Applications Handbook"**
(iSBC80/40, iSBC80/10B, iSBC80/20-4, iSBC80/24, iSBC80/30, iSBC86/05, iSBC86/12A, iSBC86/14, iSBC86/25, iSBC86/40)
Contains application notes, reliability reports, and reprints of articles on the iSBC single-board computer family. Discusses hardware, software, and industrial control products.
Intel 501315 ($10.00)

14 **"Systems Applications for the G65SC150 Communications Terminal Unit"**
(G65SC150)
Briefly describes a communications terminal unit and its system application, providing sample hardware configurations and software programs.
GTE AN-3009-04-02 (20pp)

INTERFACE

Amplifiers, PG

1 **“PGA's Give Your DAS Designs Autoranging, Wide Dynamic Range”**
Explains how data acquisition systems can utilize programmable-gain amplifiers to offer flexibility and features in a minimum number of packages.
Micro Networks AN204 (5pp)

Converters

2 **“An Evaluation Board for the RCA 41051 and CA3318 8-Bit A/D Converter”**
(41051, CA3318)
As A/D converter designs advance to higher frequencies, layout, bypassing and input-amplifier design become more critical. This note describes a demonstration board that will accept either the RCA 41051 or CA3318 8-bit flash A/D converters.
RCA ICAN-7310 (13pp)

3 **“200 kHz Current-Mode Converter Provides 500W”**
Describes a push-pull converter which develops up to 100A at 5V from a standard 48V input.
Unitrode U-101 (9pp)

4 **“3 IC 8-Bit Binary Digital to Process Current Converter with 4-20 mA Output”**
(REF-01, DAC-08, OP-14)
Delineates the construction of a process current converter operating from −5v and 23v supplies. Complete theory of operation followed by calibration procedures and a detailed parts list are included.
Precision Monolithics AN-21 (2pp)

5 **“A Cookbook Approach to High Speed Data Acquisition and Microprocessor Interfacing”**
Shows how to design a complete data acquisition board with multiplexers, programmable gain amplifiers, track and hold, A/D converter, D/A converter, address decoding, read and write timing and interfacing to a microprocessor bus.
Intersil A020 (20pp)

6 **“A Digital Multimeter That Measures Frequency Using the 9400 F/V Converter”**
(9400)
Shows how to add frequency measurement capability to a low-cost standard DMM by adding an external circuit consisting of a F/V converter, resistors and capacitors.
Teledyne Semiconductor AN-14 (2pp)

7 **“A High-Speed Color-Pallette Memory for the TDC1034 ‘Graphics Ready’ D/A Converter”**
(TDC1034)
Describes the color-pallette method of defining colors and its ability to reduce both display memory requirements and the calculation burden on a pixel data processor.
TRW LSI TP-35 (7pp)

8 **“A Low Cost, Easy-to-Build Successive Approximation Analog-to-Digital Converter”**
(DAC-100, CMP-01)
General discussion of feedback A/D converters. Operation of A/D converter capable of 8-bit conversions in 6 μs. The system is expandable to 10-bit resolution. It uses DAC-100, CMP-01, and a successive approximation register.
Precision Monolithics AN-11 (8pp)

Converters (cont)

9 **“A Low Cost, High-Performance Tracking A/D Converter”**
(DAC-100, CMP-01)
Basic operation of 8-bit tracking converter that uses DAC-100 series 10-bit D/A converter, CMP-01 series comparator, and 4-bit MSI up/down counters.
Precision Monolithics AN-6 (8pp)

10 **“A Monolithic 16 Bit D/A Converter”**
(HI-DAC16)
Discusses applications and interface considerations for the HI-DAC16 D-A Converter.
Harris Semiconductor AN539 (5pp)

11 **“A −55°C to +200°C 12-bit Analog-to-Digital Converter”**
(ADC10HT)
Presents design details of the ADC10HT, a 12-bit successive approximation hybrid A/D converter that operates over a −55°C to +200°C temperature range. The results of a 1000-hour life test are included.
Burr-Brown AN-112 (7pp)

12 **“AD DAC80 Reliability Predictions”**
(ADDAC80)
Describes model for calculating predicted failure rate of hybrid circuits per MIL-HDBK-217B and corresponding performance data for device.
Analog Devices (1pp)

13 **“AD DAC85 Reliability Predictions”**
(ADDAC85)
Presents model for calculating predicted failure rate of hybrid circuits per MIL-HDBK-217B and corresponding device data.
Analog Devices (1pp)

14 **“AD7224 Provides Programmable Voltages over Varying Ranges”**
(AD7224)
Discusses some uses of a monolithic voltage-mode CMOS D/A converter for providing programmable output voltages over varying ranges.
Analog Devices AN-E910-15-5/85 (3pp)

15 **“Am6012 12-Bit High-Speed DAC”**
(AM6012)
Describes characteristics of a 12-bit DAC and discusses various modes of operations and microprocessor interface considerations.
Advanced Micro Devices LIC-165 (12pp)

16 **“Am6012 12-Bit High-Speed DAC”**
(AM6012)
Gives applications of the AM6012 converter as a voltage-output DAC, bipolar reference, ±10V full-scale unipolar-/bipolar DACs, and successive approximation A/D converter.
Advanced Micro Devices Analog and Communications Products Data Book (13pp)

17 **“An Accurate Method for Measuring Setting Time of High Speed D/A Converters”**
(HA-4950)
Describes a reliable measurement technique, based on use of a high performance comparator.
Harris Semiconductor AN-536 (7pp)

INTERFACE

Converters (cont)

1 **"An Analysis of the Price and Performance of the AD558"**
(AD558)
Compares sample implementations of an 8-bit DAC function using discrete components versus an AD558 plus a single bypass capacitor. Advantages of the latter approach are detailed in terms of cost, speed, accuracy, reliability, power consumption, and real estate.
Analog Devices (3pp)

2 **"An Auto-Error Correction, Auto-Gain Ranging Analog Data Acquisition System"**
(ADC80)
Describes the implementation of software error correction and gain ranging techniques to improve the range and accuracy of analog data acquisition systems.
National Semiconductor AN 360 (8pp)

3 **"An Evaluation System for High-Speed A-D and D-A Converters"**
Describes a printed-circuit board for evaluating converters at the component level as well as the system level. A functional description of the components and the theory involved is included.
Motorola Semiconductor AN-848 (12pp)

4 **"An Introduction to the Sampling Theorem"**
Analyzes the sampling theorem and pitfalls encountered in its application to signal processing systems. Hardware implementation includes discussion of antialiasing filters, S/H circuits and D/A converters.
National Semiconductor AN236 (12pp)

5 **"Analog-Digital Conversion Notes"**
Covers many aspects of A/D and D/A converters including use, testing and specifying. Extensive applications information includes data systems, acquisition, distribution, communication.
Analog Devices $5.95 (254pp)

"Analog-to-Digital Conversion Techniques with the M6800 Microprocessor System"
See listing under (Microprocessor) Systems (Motorola)

6 **"Applications"**
Covers the CMOS DAC as a multiplier, attenuator, divider, calibration trimmer, low-frequency function generator, and programmable gain element. Includes applications such as programmable power supplies and digitally controlled filters.
Analog Devices CMOS DAC Application Guide, Chapter 6 (35pp)

7 **"Applications for the 9400 Voltage to Frequency/Frequency to Voltage Converter"**
(9400)
Contains 25 block diagrams of applications in which the device is used.
Teledyne Semiconductor AN-10 (8pp)

"Applications of a Monolithic Sample-and-Hold/Gated Operational Amplifier"
See (Linear) Amplifiers, Operational (Harris)

8 **"Applications of the 8700 Series A/D Converters"**
(8700)
Supplies diagrams showing interface to autoranging circuits, to gas discharge displays, and to two independent displays, operated from one A/D.
Teledyne Semiconductor AN-9 (16pp)

Converters (cont)

9 **"Applications of the AD537 IC Voltage-to-Frequency Converter"**
(AD537)
Describes device theory and operation. Presents various applications including strain-gauge input, position transducers, and a photodiode input. Block diagrams are provided.
Analog Devies (20pp)

"Applications of the MC1405/MC14435 in Digital Meters"
See listing under (Linear) Instrumentation (Motorola)

10 **"Applications of the ZN425E 8-Bit A-D/D-A Converter"**
(ZN425)
Covers converter definitions, calibration, bipolar operation. Applications: ramp generation, peak detect, channel selection, weighing system, bargraph drive, multiply/divide, and function generation.
Ferranti (31pp)

11 **"Audio Applications for the DAC-76 Companding Converter"**
(DAC-76)
Discusses the multiplying and control characteristics of the DAC-76 in audio applications. High performance digitally-controlled attenuators are featured.
Precision Monolithics AN-28 (8pp)

12 **"Autoranging Digital Multimeter Using the MC14433 CMOS A/D Converter"**
(MC14433)
Describes using the MC14433 A/D converter to build an autorange digital multimeter. The multimeter includes ac and dc voltage ranges from 200mV to 200V, ac and dc current from 2mA to 2A full scale, and resistance ranges from 2 kilohms to 2 megohms full scale.
Motorola AN-769 (5pp)

13 **"Basic Applications Circuits for CMOS DACs Operated in the Conventional Current-Steering Mode"**
Discusses current-steering mode operation, covering op amp selection, output variations, gain changes, and voltage references.
Analog Devices CMOS DAC Application Guide, Chapter 3 (6pp)

14 **"Build a Low Cost Data Acquisition System with Standard DIPs"**
(MN7130)
Shows how a complete 12-bit, 16-channel data acquisition system can be built by adding a few standard ICs to the MN7130 multiplexed sample/hold amplifier.
Micro Networks AN201 (6pp)

15 **"CA330 CMOS/SOS Flash A/D Converter Operates at Video Speed on Low Power"**
(CA330)
The CA330, a 6-bit A/D converter combining CMOS with an SOS process, brings cost, power, and real estate benefits to video speed applications. Two CA330s can be stacked to make a video-speed 7-bit converter, or three can be combined with a DAC, binary adder, control logic, and op amp to produce a very high-speed 12-bit A/D converter.
RCA ICAN-6956 (5pp)

16 **"CMOS A/D Converter Chips Easily Interface to 8080A Microprocessor Systems"**
(ADC3511, ADC3711, INS8080A)
Outlines techniques for interfacing AID converter devices to 8080A μP systems. Includes description of A/D conversion, BCD output capability, flowcharts, schematics, and block diagrams.
National CMOS Databook AN-200 (9pp)

INTERFACE

Converters (cont)

1 **"CMOS D/A Converter Circuits for Single +5V Supplies"**
(AD7528, AD7545, AD7548)
Covers the basic design techniques for using three CMOS D/A converters with a single +5V supply and methods of integrating them into microcomputers with minimal additional hardware.
Analog Devices AN-E828a-5-10/84 (4pp)

2 **"CMOS DACs in the Voltage-Switching Mode"**
(AD7500 Series)
Explains how the AD7520 and other CMOS DACs can be used in a voltage-switching mode with no offset-induced nonlinearity. System benefits include the possibility of single-supply operation (including output op amp), increased speed, and economical digital bipolar operation.
Analog Devices (2pp)

3 **"CMOS DACs in the Voltage-Switching Mode Can Work from a Single Supply, Including Output Op Amp, for Fast Response, No Offset-Induced Nonlinearity"**
(AD7520, AD7521, AD7522, AD7523, AD7524, AD7530, AD7531, AD7533)
Describes techniques for making the above CMOS D/A converters operate in the voltage-switching mode with specified linearity.
Analog Devices (2pp)

4 **"CMOS DACs: Important Considerations Above 12 Bits"**
(HS3160)
Describes the technical issues and problems involved in applying D/A converters with resolutions above 12 bits. Topics covered include temperature stability, output capacitance, settling time, digital feedthrough, output offset, reference voltage level, and finite gain effects of the output amplifier.
Hybrid Systems AB-11 (11pp)

5 **"Circuit Applications for a 12-bit ECL DAC"**
(DAC63, MC10176, MC10176, MC10136, MC10101, MCM10149)
Compares operation of T^2L and ECL D/A converters with respect to data skew, ground currents, line driving and receiving capability; includes discussions on amplitude and phase synthesis and the use of an ECL DAC in a 12-bit, 250ns A/D converter.
Burr-Brown Research AN-105 (6pp)

6 **"Companding Digital-to-Analog Converter"**
(DAC-86, DAC-87)
Discusses how a companding digital-to-analog converter (DAC) is the key component in PCM CODEC Systems.
Precision Monolithics AN-39 (13pp)

7 **"Comparison of the TML1070 with Respect to RCA CA3300"**
(TML1070)
Discusses the operating characteristics of these flash converters.
Telmos AN-1 (2pp)

8 **"Computer Programs for Computing Computational Errors, Output Ripple, and 1% Settling Time for RMS Converters"**
Gives programs for the Apple II to calculate values of DC error, ripple, and averaging error for RMS converters.
Analog Devices RMS to DC Conversion Application Guide C (2pp)

9 **"Counter Type A to D Converter"**
(HI1080)
Circuit details of an A to D converter employing a unidirectional digital counter and the HI-1080 eight-bit D to A converter to generate a ramp voltage.
Harris Semiconductor AN-512 (3pp)

Converters (cont)

10 **"Current-Steering Chip Upgrades Performance of D/A Converter"**
Explains how a monolithic array of bit switches uses current steering to improve the speed and precision of D/A converters.
Teledyne Philbrick AN-17 (6pp)

11 **"D/A Converter Differential Linearity Error-It Really Shows Up"**
Discusses differential linearity, the difference in analog output for a change between two successive digital input codes. Gives graphs of two examples with the same linearity specification.
Burr-Brown AN-58 (2pp)

12 **"D/A Converter Generates Hyperbolic Functions"**
(DAC-20)
Explains operating theory and design considerations of two IC hyperbolic function generator. Includes circuit diagrams.
Precision Monolithics AN-23 (3pp)

13 **"DAC-08 Applications Collection"**
(DAC-08)
Discusses the benefits of dual output, and high compliance. Covers use as a CRT display driver, bridge transducer control system, A/D converter, waveform generator, digital addition/subtraction with analog output, digital attenuator and microprocessor controlled A/D converter.
Precision Monolithics AN-17 (12pp)

14 **"DAC-08 Control of A 555 Timer IC"**
(DAC-08)
Describes a digitally or microprocessed controlled one-shot and an astable multivibrator using two of the low cost building blocks, the DAC-08 and the 555 timer. Digital control ranges of 255 to 1 and 510 to 1 are shown for one-shot and astable applications allowing periods of 18 μsec to 1.4 seconds and frequencies of 1 Hz to 60 kHz.
Precision Monolithics AN-36 (3pp)

"Data Acquisition Networks with NMOS and CMOS"
See listing under (Microprocessors) Applications (Motorola)

15 **"Data Acquisition and Conversion Handbook"**
Discusses data acquisition/conversion principles. With applications and glossary.
Datel-Intersil $4.95 (250pp)

16 **"Data Conversion Interfacing with the 8080 Microprocessor"**
(8080)
Discusses Analog-to-Digital Conversion (ADC) and Digital-to-Analog Conversion (DAC) and their importance in input/output (I/O) control functions when interfacing with the 8080 Microprocessor. Describes low cost and system simplicity in the versatility of a DAC as it progresses from a μP output device to an ADC input function and finally to its use in a complete Data Acquisition System.
Precision Monolithics, Inc. AN-30 (12pp)

17 **"Data Conversion with Companding DAC Devices"**
Introduces companding principles and use of companding DACs in industrial and PCM transmission systems. Provides companding DAC circuit description and discussion of how μP based data acquisition systems, motion control, audio systems, and telecommunication systems.
Advanced Micro Devices (36pp)

INTERFACE

Converters (cont)

1 **"Data Conversion with Companding DAC Devices"**
(AmDAC-08, Am6072, Am6070, Am6071)
Explains the principles of companding transfer functions and the use of companding D/A converters in A/D conversion, industrial systems, and PCM transmission systems.
Advanced Micro Devices Analog and Communications Products Data Book (35pp)

2 **"Data Converter Test Methods for Digital Audio Applications"**
(PCM50, PCM52, PCM53, PCM75)
Discusses the relative importance of operating parameters of data converters when applied to digital audio systems as opposed to traditional instrumentation applications. The primary parameters are pinpointed, with appropriate test circuits and evaluation methods given.
Burr-Brown AN-113 (6pp)

3 **"Designing High Speed Data Acquisition Systems"**
Discusses the basics of data acquisition systems; focusing on A/D converters, sample-and-hold circuits, and multiplexer modules.
Teledyne Philbrick AN-21 (12pp)

4 **"Differential and Multiplying Digital-to-Analog Converter Applications"**
(DAC-08)
Describes use in 2-quadrant, 4-quadrant, 4-quadrant and AC-coupled multiplication. Also covers differential and ratiometric conversion, a nulling bridge circuit, a power monitor, and algebraic computation circuits with analog output.
Precision Monolithics AN-19 (8pp)

5 **"Digital Voltmeters and the MM5330"**
(MM5330)
Describes basic counting techniques for building digital voltmeters and shows how the MM5330 can be used in a dual slope system.
National MOS/LSI Databook AN-155 (8pp)

6 **"Digital to Analog Converter High Speed DAC Family"**
(HI562, HI5608, HI5610)
Provides functional and operational diagrams plus descriptions of the devices.
Harris Semiconductor AN-523 (4pp)

7 **"Digital to Analog Converter Terminology"**
Explains need to D/A and terms used in specifying it.
Harris Semiconductor AN-522 (3pp)

8 **"Digital to Analog Converter: High Speed ADC Applications"**
Discusses tracking and successive-approximation a/d converter design. Presents a data acquisition system including block diagrams.
Harris Semiconductor AN-524 (3pp)

9 **"Digital-to-Analog Conversion Using the RCA CD4007A COS/MOS IC"**
(CD4007A)
Discusses resistance networks for DAC's and a voltage-follower amp for single-supply operation. Describes a 9-bit COS-MOS DAC.
RCA ICAN-6080 (6pp)

10 **"Digital-to-Analog Converter Applications"**
(HI1080, HI1085)
Operating modes and applications of HI-1080 converter, which features resistor ladder network and switching devices on same chip. Discusses cascaded D to A converter as well as up-down counter and successive approximation A to D converters.
Harris Semiconductor AN-511 (7pp)

Converters (cont)

11 **"Direct Bus Interfacing using the ZN427/ZN428"**
(ZN427, ZN428)
Describes how A/D and D/A converter chips are interfaced to most popular 8-bit microprocessors. Provides timing diagrams and electrical characteristics.
Ferranti Application Report 14 (9pp)

12 **"Do's and Don't's of Applying TML1070 Flash A/D Converter"**
(TML1070)
The TML1070 can be operated over a wide range of parameters, but certain precautions must be taken for optimum performance. This note tells how to achieve maximum signal integrity or lowest power operation.
Telmos AN-3 (2pp)

13 **"Do's and Don'ts of Applying A/D Converters"**
Examines topics concerning proper system design when using A/D converters. Subjects treated include ground loop errors, components, references, capacitive coupling, and thermal effects.
Intersil A018 (2pp)

14 **"Dynamic Resolution Switching on the 1S74 Resolver-to-Digital Converter"**
(1S74)
The 1S74 resolver-to-digital converter can be switched from 10- to 16-bit resolution by external TTL signals in some high-resolution applications. This note describes the precautions to be taken when changing gear while the converter is tracking.
Analog Devices

15 **"Exploring the AD667 12-Bit Analog Output Port"**
(AD667)
Describes a 12-bit D/A converter in which an on-board voltage reference, output amplifier, and double-buffered latch permit it to function as a self-contained analog voltage output port for a microprocessor.
Analog Devices AN-E875-15-11/84 (8pp)

16 **"Exponential Digitally Controlled Oscillator Using DAC-76"**
(DAC-76)
Depicts a 4-IC microprocessor-controlled oscillator with a 8159 to 1 frequency range covering 2.5 Hz to 20 kHz. The circuit uses an exponential current output D/A converter as a programmable current source.
Precision Monolithics AN-20 (3pp)

17 **"Extending the Capabilities of the MC10315/10317 Flash A/D Converters"**
(MC10315, MC10317)
Recent advances have provided the means to produce 7-bit flash converters in monolithic form. This note discusses some ways in which users can extend the resolution and speed of the basic devices.
Motorola Semiconductor AN-844 (6pp)

18 **"Flash Analog to Digital Converters: Optimizing Performance"**
Presents background information on analog to digital conversion, the basics of flash A/D techniques, and practical considerations for the successful implementation of a flash A/D.
Comlinear AN-103-1 (3pp)

INTERFACE

Converters (cont)

1 **"Flyback Converter"**
(LAS6320)
Covers the field of single-output and multiple-output flyback converters.
Lambda Semiconductors Applications Handbook II (16pp)

2 **"Function and Application of 3½ Digit A/D Converter Set"**
(LD110, LD111)
Describes the operation of the LD110 digital processor and the LD111 analog processor. Various DVM circuits are shown including circuits for ratio, current, ac voltage and frequency measurements. A detailed error analysis is provided.
Siliconix AN74-1 (12pp)

3 **"Function/Application of the LD120/LD121A 4¼-Digit A/D Converter Set in Measurement Systems"**
(LD120, LD121A)
The application of the LD120/1A ICs to A/D conversion systems in panel members and voltmeters is discussed. Operation of the devices is described, application circuits are considered, and a trouble-shooting chart is provided.
Siliconix AN77-1 (10pp)

4 **"Function/Application of the LD122/LD121A 4½ Digit A/D Converter Set in Measurement Systems"**
(LD122, LS121A)
Discusses differential measurement techniques, input buffer selection considerations, system layout, grounding methods and troubleshooting in thermocouple, resistance bridge and strain-gage measurement systems using an A/D converter set.
Siliconix AN80-8 (8pp)

5 **"Gain Error and Gain Temperature Coefficient of CMOS Multiplying DACs"**
(AD7542, AD7527)
Details the parameters that affect the gain of CMOS multiplying DACs, including gain temperature coefficient due to gain trim resistors R1 and R2, gain shift due to leakage from V_{DD}, and offset shift due to leakage across the switches.
Analog Devices (4pp)

7 **"Generate Non-Linear Transfer Functions with Flash A/D Converters"**
(TDC1019)
Explains how using a flash converter in nonlinear mode can solve the speed vs resolution tradeoff in applications requiring large dynamic range.
TRW LSI TP-19 (4pp)

8 **"Getting the Best Performance from Video D/A Converters"**
Offers guidance to the design engineer and printed circuit board designer on ways to obtain optimal performance from a video D/A converter.
Brooktree AN-1 (4pp)

9 **"High Speed Digital-to-Analog and Analog-to-Digital Techniques"**
Gives overview that includes voltage and current output D/A, parallel (flash), tracking, successive approximation, and parallel ripple A/Ds as well as nonsynchronous and synchronous VTF A/D. Glossary of terms.
Motorola AN-702 (14pp)

Converters (cont)

10 **"High-Performance Frequency-to-Voltage Converter Using the XR-2211"**
(XR2211)
Discuss the design of a stable, highly linear F/V converter using the XR-2211 phase locked loop.
Exar AN-23 (2pp)

11 **"How to Specify and Test Voltage-to-Frequency and Frequency-to-Voltage Converters"**
Defines device parameters, specifications, and test techniques.
Teledyne Philbrick AN-22 (4pp)

12 **"Input Buffer Amplifier Requirements"**
(AD536, 636, 637)
Explains the necessity of an input buffer amplifier for RMS converters and how to configure one.
Analog Devices RMS to DC Conversion Application Guide B (6pp)

13 **"Inside CMOS DACs"**
Details on the basic design and processes of CMOS DACs, with a guide to typical operating parameters.
Analog Devices CMOS DAC Application Guide, Chapter 2, (8pp)

14 **"Interfacing Precision Monolithics Digital-to-Analog Converters with CMOS Logic"**
(DAC-100, DAC-01)
Analyzes input circuits of these DACs and CMOS interfaces. Describes a complete 10-bit DAC and an 8-bit A/D.
Precision Monolithics AN-14 (4pp)

15 **"Interfacing the AD2036 6 Channel Digital Scanning Thermometer with the ANP-9 Thermal Printer."**
(AD2036)
Describes the use of the AD2036 digital scanning thermometer as an interface to the Gulton ANP-9 thermal head alpha-numeric printer. The system provides a low-cost means of achieving a permanent record of temperature readings.
Analog Devices

16 **"Interfacing the AD558 Dacport to Microprocessors"**
(AD558)
Examines considerations for interfacing an 8-bit DAC with the 8080A, 8085A, 8048/8758, 6800/650X and 1802 microprocessors. Example applications include ramp generation and software-controlled analog-to-digital conversion.
Analog Devices (6pp)

17 **"Introduction to CMOS DACs"**
An introduction to CMOS D/A converters based on an R-2R resistive ladder network. Covers basic concepts, multiplying properties, codes and terminology.
Analog Devices CMOS DAC Application Guide, Chapter 1 (4pp)

18 **"Introduction to Quantized Feedback"**
(LD111A, LD120, LD122, LD130, LD110, LD121A, LD114)
Describes propietary approach to A/D conversion using an analog processor and digital controller and with auto-polarity, auto-zero and ratiometric operation.
Siliconix AN81-2 (10pp)

19 **"Low Cost Four Channel DAC gives BCD or Binary Coding"**
(DAC-08, DAC-20)
Describes the construction of a four-channel digital-to-analog converter using four multiplying DACs, a precision quad op amp, a system IC voltage reference, and a DIP-packaged thin-film resistor network.
Precision Monolithics AN-26 (4pp)

INTERFACE

Converters (cont)

1 **"Low Cost, High Speed Analog-to-Digital Conversion with the DAC-08"**
(DAC-08)
Discusses the successive approximation technique to A/D and describes three designs with conversion times of 1, 2, and 4 μsec.
Precision Monolithics AN-16 (7pp)

2 **"Magnitude-Plus-Sign ADC Using a V-F Converter"**
(4701, 4703, 4705)
Explains how an absolute-value circuit and counter can transform an inexpensive V/F module into a magnitude-plus-sign A/D converter with better than 11-bit linearity.
Teledyne Philbrick AN-6 (1pp)

3 **"Methods for Generating Complex Waveforms and Vectors Using Multiplying D/A Converters"**
(AD7544)
Describes analog waveform synthesis using CMOS multiplying D/A converters, including staircase, triangle and sawtooth waveforms.
Analog Devices (6pp)

4 **"Microprocessor Interface Techniques as Applied to the Siliconix A/D Converter Family"**
(L121A, LD130)
Discusses cost and speed advantages of using A/D converters instead of a peripheral interface device for synchronous or asynchronous interface to a microprocessor.
Siliconix AN81-1 (4pp)

5 **"Microprocessor Interfacing Using the ZN427/ZN428 Data Converters"**
(ZN427, ZN428)
Demonstrates the design of an analog I/O system using A/D and D/A converters with 6800 and 8085A microprocessors. Includes circuit, timing and logic flow diagrams plus example programs.
Ferranti Application Notes 10, 11 and 12 (28pp)

6 **"Microprocessor Interfacing Using the ZN432 10-Bit ADC"**
(ZN432)
Describes a 10-bit A/D converter IC and techniques for interfacing with 8-bit microprocessors using a minimum of external discrete components and standard TTL logic elements.
Ferranti Electric AR-16 (9pp)

7 **"Modelling Analysis and Compensation of the Current Mode Converter"**
(UC1846)
Demonstrates how the performance of any current-mode converter can be improved while reducing or eliminating problems with instability subharmonic oscillation, nonideal loop response, and noise sensitivity.
Unitrode U-97 (6pp)

8 **"Modelling, Analysis and Compensation of the Current-Mode Converter"**
Explains how adding a fixed amount of slope compensation to a sensed current waveform can improve the performance of any current-mode converter.
Unitrode U-97 (6pp)

9 **"Modular DC Output Power Supply Parameter Definition and Measurement"**
Describes basic specifications, current limiting, and output protection of DC output power supplies. Also gives information on the input, output, and common mode noise of DC/DC converters.
Teledyne Philbrick AN-26 (3pp)

Converters (cont)

10 **"Modular VFs and FVs: Simple Solutions to Everyday Conversion Problems"**
Describes applications for V/F and F/V converters, with schematics and design tips.
Teledyne Philbrick AN-32 (7pp)

11 **"Need a 1 kHz Full-Scale V-F?"**
(4701, 4703, 4705, 4709)
Offers three techniques by which a V/F converter can be used to produce a full-scale frequency lower than its rated frequency.
Teledyne Philbrick AN-2 (1pp)

12 **"Operation Applications of the AD654 IC V-to-F Converter"**
(AD654)
Describes the theory of operation of the AD654, discusses general application precautions, and presents numerous application examples.
Analog Devices AN-E923-25 (28pp)

13 **"Principles and Applications of the ICL7660 CMOS Voltage Converter"**
(ICL7660)
Describes operation and application of a monolithic voltage converter that provides a complementary voltage output of − 1.5V to − 10V with a + 1.5V to + 10V input.
Intersil A051 (8pp)

14 **"Principles of Data Acquisition and Conversion"**
Discusses basic principles of analog to digital systems including sampling rate, aperture error, accuracy, resolution, throughput, and codes.
Burr-Brown AN-79 (5pp)

15 **"Quick Selection Guide for DC/DC Converter Design Equations"**
Gives information on design equations, waveforms and maximum electrical stresses for step-up, step-down, inverting step-up, and Cuk step-down/step-up converters.
Lambda Semiconductors Applications Handbook IV (10pp)

16 **"RC4151/52/53 Voltage-to-Frequency Converters"**
(RC4151, RC4152, RC4153)
Describes the principles of operation and applications involving data conversion, data transmission, motor speed controls and other uses for VFCs.
Raytheon Semiconductor AN25 (32pp)

17 **"RMS Applications Circuits"**
(AD534, 536A, 580, 741)
Discusses an RMS automatic gain control amplifier and its applications in audio processing, instrumentation, and data acquisition.
Analog Devices RMS to DC Conversion Application Guide III (12pp)

18 **"RMS to DC Conversion—Basic Design Considerations"**
(AD536A, 636, 637)
Discusses the accuracy of RMS-to-DC converters, averaging and filtering considerations, settling time, using internal buffer amplifiers, and the effects of symmetry, DC offset, and input waveform duty cycle.
Analog Devices RMS to DC Conversion Application Guide II, (16pp)

Converters (cont)

1 **"RMS-DC Conversion Theory"**
(AD536A, 636, 637)
A tutorial on basic definitions on RMS-to-DC conversion, methods of AC measurement, conversion techniques, and the operating principles of available converters.
Analog Devices RMS to DC Conversion Application Guide I (4pp)

2 **"Ready-to-Use DC/DC Converter Circuit Collection"**
(LAS6320, LAS6300, LAS1612)
A collection of circuits for designing step-up, step-down, flyback, and negative-to-positive buck-boost converters. Dual-output transformerless converters and voltage inverting DC/DC converters are also covered.
Lambda Semiconductors Applications Handbook III (14pp)

3 **"Remote Control Dual Range A/D Converter Using the 7106"**
(7106)
Discusses design of a remote-control, dual-range voltage-measuring circuit using a A/D converter-display driver chip.
Teledyne Semiconductor AN-13 (1pp)

4 **"Repetitive Mode Operation for Models 4109/4111 Integrating A/D Converters"**
(4109, 4111)
Runs through external trigger generator and sure start circuit schemes which are used when the devices must run without ceasing to convert.
Teledyne Philbrick AN-28 (2pp)

5 **"Resolver-to-Digital Conversion—A Simple and Cost-Effective Alternative to Optical Shaft Encoders"**
(1S60)
Discusses the advantages of using resolvers in the cost-effective measurement of position.
Analog Devices AN-E903-10 (4pp)

6 **"Selecting A/D Converters"**
Compares and contrasts successive approximation and integrating A/D conversion techniques with respect to speed, accuracy, and cost.
Intersil A016 (6pp)

7 **"Settling Time"**
Explains the importance of settling time and discusses ways of measuring it for high-speed 12-bit D/A converters and operational amplifiers.
Burr-Brown AN-115 (14pp)

8 **"Simple Interface between D/A Converter and Microcomputer Leads to Programmable Sine-Wave Oscillator"**
(AD7542)
Outlines a simple interface between a 12-bit CMOS D/A converter and an 8-bit MCS-48 microcomputer as part of a circuit that generates programmable low-distortion sine waves.
Analog Devices AN-E889-15-2/85 (6pp)

9 **"Simplify A/D Converter Interface with Software"**
(TSC7135)
Discusses use of the strobe output of the TSC7135 4-1/2-digit A/D converter in simplifying interfacing to displays.
Teledyne Semiconductor AN-17 (4pp)

10 **"Single-Supply Operation for CMOS DACs Using the Voltage-Switching Mode"**
Explains the differences between current and voltage switching modes of operation, offering guidelines and tips on the implementation of the letter.
Analog Devices CMOS DAC Application Guide, Chapter 4 (4pp)

Converters (cont)

11 **"Software Combines with CMOS LSI to Form 3-3/4-digit DVM"**
(SY6522, TS7109, TS7211A)
Describes the capabilities of 3-3/4-digit DVM using a display driver, A/D converter, and interface adapter.
Teledyne Semiconductor AN-22 (4pp)

12 **"Software Combines with CMOS LSI to Form 3¾-Digit DVM"**
(TSC7211A, TSC7109)
Explains how a CMOS A/D converter and display driver can be programmed to expand a DVM's display capabilities from 3½ to 3¾ digits and its resolution from a typical 1,999 to 4,095 counts.
Teledyne Semiconductor AN-22 (4pp)

13 **"Software Controlled A/D Conversion Using DAC-08 and the 8080A Microprocessor"**
(DAC-08)
Describes software controlled, 8-bit A/D conversion using the DAC-08 and the 8080A. Subjects include I/O interface considerations, I/O control using memory mapping, and a successive approximation A/D conversion algorithm.
Precision Monolithics AN-22 (4pp)

14 **"Solve Sensor Offset Problems with the TSC7106"**
(TSC7106)
Shows how an A/D converter can solve problems caused by nonideal sensors by providing input offset and reference voltages.
Teledyne Semiconductor APB-7 (1pp)

15 **"Solve Your Measurement Problems"**
Discusses V/F and F/V converters and their use in data acquisition problems.
Teledyne Philbrick AN-20 (6pp)

16 **"Specifying and Testing Analog-to-Digital Converters"**
Defines the basic parameters, specifications, and test methods.
Teledyne Philbrick AN-24 (7pp)

17 **"Specifying and Testing Digital-to-Analog Converters"**
Defines basic parameters, specifications and test methods.
Teledyne Philbrick AN-25 (7pp)

18 **"Squeeze High Performance Out of Low-Cost Hybrid Data Converters"**
Lists ways in which converter performance can be improved by the addition of a few external components.
Burr-Brown AN-86 (4pp)

19 **"Static and Dynamic Testing of Digital-to-Analog Converters"**
Describes test procedures and equipment for measuring offset, full-scale, gain and linearity errors in DACs. Test equipment discussed ranges from DVMs to automatic testers.
Burr-Brown AN-99 (6pp)

20 **"Step-Down Converter"**
(LAS6300)
Comprehensive text on designing with step-down converters.
Lambda Semiconductors Applications Handbook I (30pp)

21 **"Strobing the DAC-08 Under Logic Control"**
(DAC-08)
Gives connections for strobing the output of this DAC.
Precision Monolithics AB-1 (1pp)

INTERFACE

Converters (cont)

1 **"Synchro and Resolver Conversion"**
Discusses synchros and resolvers, their relationship to other angular transducers, synchro/resolver to digital conversion, digital to synchro/resolver conversion, and potential applications.
Analog Devices (191pp)

2 **"TSC7109 Records Remote Data Automatically"**
(TSC7109)
Details a low-cost, low-power, flexible data logging system composed of an A/D converter, 2 Kbyte static RAM, and a few gates and counters.
Teledyne Semiconductor AN-24 (2pp)

3 **"TSC7135 to 6502/6522 Microprocessor Measurement System"**
(TSC7135)
Describes use of the TSC7135 A/D converter in an interrupt driven measurement system that requires only one 6522 I/O port.
Teledyne Semiconductor AN16

4 **"TSC7660 Powers RS-232 Data Loop"**
(TSC7660)
Explains how a low-cost circuit using a DC/DC converter and optoisolator converts TTL signals to RS-232 levels without the added expense of a negative power supply.
Teledyne Semiconductor APB-8 (1pp)

5 **"Testing the Critical Parameters of RMS Converters"**
Covers the two basic parameters of RMS converters that require different testing procedures than precision rectifier circuits.
Analog Devices RMS to DC Conversion Application Guide A (6pp)

6 **"The AD7574 Analog to Microprocessor Interface"**
(AD7574)
A guide to microprocessor interfacing for the AD7574 8-bit A/D converter.
Analog Devices (5pp)

7 **"The AD7574 Analog to Microprocessor Interface"**
(AD7574)
Describes the AD7574 in its three main microprocessor interface modes with reference to external clock source, input range switching and input multiplexing applications.
Analog Devices E694-10 (5pp)

8 **"The ICL7104—A Binary Output A/D Converter for Microprocessors"**
(ICL7104, ICL8052, ICL8068)
Describes the operation of the ICL7104, and either the ICL8052 or ICL8068, as a dual-slope integrating converter.
Intersil A030 (14pp)

9 **"The Integrating A/D Converter"**
Discusses the dual slope technique with considerable attention to error analysis.
Intersil A017 (4pp)

10 **"The Logic Interface"**
(AD7524, AD7528, AD7533, AD7545)
A practical guide to CMOS-to-TTL level shifting in CMOS DACs.
Analog Devices CMOS DAC Application Guide, Chapter 5 (4pp)

Converters (cont)

11 **"The Multiplying DAC Application Guide"**
(AD7520, AD7521, AD7522, AS7523, AD7524, AD7525, AD7530, AD7531, AD7533, AD7541)
Discusses applications which take advantage of the MDAC's ability to accept AC or DC references, which can be of either polarity. Applications include digitally-controlled gain and attenuation circuits.
Analog Devices (40pp)

12 **"The OP-17, OP-16, OP-15 as Output Amplifiers for High Speed D/A Converters"**
(DAC-08, DAC-20, DAC-76, OP-15, OP-16, OP-17)
Illustrates design of high speed, voltage output D/A converters using these devices. Circuit diagrams for high speed, low drift, and low power applications are provided.
Precision Monolithics AN-24 (3pp)

13 **"The TDC1048: A New Low-Power 8-Bit A/D Converter"**
(TDC1048)
Gives design features, process features, and performance characteristics of an 8-bit flash A/D converter.
TRW LSI TP-32 (3pp)

14 **"Three-Phase Sine-Wave Generation Using the AD7226 Quad DAC"**
(AD7226)
Describes a quad 8-bit CMOS D/A converter and its use for generating three-phase sine waves for driving small three-phase motors.
Analog Devices AN-E924-15-7/85 (3pp)

15 **"Tips for Using Single-Chip 3½ Digit A/D Converters"**
(ICL7106, ICL7116, ICL7107, ICL7117, ICL7126)
Provides answers to commonly asked questions regarding A/D converter application in display systems. Includes troubleshooting guide, normal waveforms and equations for component values.
Intersil A052 (8pp)

16 **"Understanding Flash A/D Converters Technology"**
Gives in-depth explanations of the specified parameters of flash A/D converters.
TRW LSI TP-30 (12pp)

17 **"Understanding LOGDACS"**
(AD7100 Series)
Basic information on a series of CMOS multiplying D/A converters characterized by an exponential D/A transfer function.
Analog Devices (4pp)

18 **"Understanding LOGDACs"**
(AD7100 Series)
Outlines the theory of LOGDACs (multiplying DACs characterized by an exponential digital-to-analog transfer function), and describes basic circuit configurations.
Analog Devices E797-10 (4pp)

19 **"Understanding the Auto-Zero and Common-Mode Performance of the ICL7106/7107/7109 Family"**
(ICL7106, ICL7107, ICL7109)
Shows how to avoid application problems with differential-input A/D converters having differential reference and separate analog and digital ground references.
Intersil Application Bulletin A032 (8pp)

20 **"Using the 4130 ADC Series, 4855 Sample-Hold, and 4550 Multiplexer in High Speed Data Acquisition Systems"**
(4130, 4855, 4550)
Analyzes several types of data acquisition systems built from an A/D converter, S/H amplifier, and buffered multiplexer.

INTERFACE

Converters (cont)

1 **"Using the ECL HDG-Series in a TTL World"**
(HDG)
A discussion of the benefits of ECL over TTL and an ECL D/A converter's application in TTL systems.
Analog Devices (2pp)

2 **"Using the ECL HGD-Series in a TTL World"**
(HDG Series)
Describes techniques for using the HDG series digital-to-analog converters with TTL interfacing.
Analog Devices E756-10 (2pp)

3 **"Using the TDC1018 and TDC1034 in a TTL Environment"**
(TDC1018, TDC1034)
Although designed for operation in systems employing ECL logic, the TDC1018 and TDC1034 D/A converters can be used in TTL environments, as this note illustrates.
TRW LSI TP-33 (3pp)

4 **"VF's as Long-Term Integrators"**
(4701, 4703, 4705)
Explains the benefits of using a V/F converter as a long-term integrator instead of analog approaches.
Teledyne Philbrick AN-9 (2pp)

5 **"VFC32 Operation at 500 kHz"**
(VFC32)
Explains the operation of the VFC32 voltage-to-frequency converter at 500 kHz. Four interface circuit configurations are given.
Burr-Brown AN-109 (2pp)

6 **"VFs, FVs, and Audio Tape Recorders"**
(4701, 4702)
Discusses the use of V/F and F/V converters as a link between a tape recorder and X-Y plotter.
Teledyne Philbrick AN-11 (3pp)

7 **"What Designers Should Know About Data-Converter Drift"**
Examines components of drift as they apply to A/D and D/A converters. Includes discussion of the effect of reference drift and computation of worst case error.
Burr-Brown AN-89 (4pp)

8 **"Why the Velocity Output on the 1S74 and 1S64 Series Converters is Continuous and Step Free Down to Zero Speed"**
(1S64, 1S74)
Explains why the 1S64/1S74 series of devices, although, in effect A/D converters, have a velocity output that is not quantized.
Analog Devices AN-E893-15 (1p)

9 **"Two-Digit Serial Input LED Display Driver using TSC9404"**
(TSC9404)
A serial to 16-biy parallel converter minimizes the number of I/O lines required for a microprocessor to display data on 7-segment LEDs. Note gives operating and programming details.
Teledyne Semiconductor AN-20 (2pp)

Data Acquisition Systems

10 **"A Data Acquisition and Conversion System with less than ± LSB Offset Error"**
(HI-5900, HI-5901, HI-5712)
Describes a system incorporating automatic digital correction of offset error.
Harris Semiconductor AN-530 (2pp)

11 **"Design Considerations for a Data Acquisition System (DAS)"**
Provides a collection of guidelines for the design of a data acquisition system. Includes signal conditioning, transducers, single-ended vs. differential signal paths, low level signals, filters, programmable gain amplifiers, sampling rate, and computer interfacing.
Harris Semiconductor AN-535 (7pp)

Data Transmission

12 **"2661 Operating Mode Switching Procedures"**
(2661)
Covers methods for switching the 2661 Enhanced Programmable Communications Interface from echoplex or remote loop-back mode to normal operation and vice versa.
Signetics AN-402 (1pp)

13 **"A 20-Mbaud Full Duplex Fiber Optic Data Link Using Fiber Optic Active Components"**
(SN74LS40B, MF0D4-02F, MC1733, MC75107)
Describes the design, construction, testing and performance of a TTL-compatible, optical data link. Includes schematic, parts list and printed circuit artwork.
Motorola AN-794 (28pp)

"A COS/MOS PCM Telemetry and Remote Data Acquisition Design"
See listing under (Digital) CMOS (RCA)

"A Typical Data-Gathering and Processing System Using CD4000A-Series COS/MOS Parts"
See listing under (Digital) CMOS (RCA)

14 **"An Introduction to the Video Interface System (VIS) Devices - CDP1869 and CDP1870"**
(CDP1869, CDP1870, CDP18S020)
Describes circuit and software for mating a video-interface chip set to the CDP18S020 evaluation kit for assessing chip-set capability in the video portion of a CRT terminal.
RCA ICAN-6953 (11pp)

15 **"Applying the HI5900 Analog Data Acquisition Signal Processor"**
(HI5900)
Discusses uses and interfaces for a fully integrated hybrid analog "front-end" for a data acquisition system.
Harris Semiconductor AN-527 (4pp)

16 **"Asynchronous Receiver/Transmitter"**
(TR1602, TR1865)
General description of asynchronous transmission and operation of TR1602, which is capable of full or half duplex operation. Describes application in distributed computer networks.
Western Digital Application Report 1 (12pp)

INTERFACE

Data Transmission (cont)

1 **"Binary Synchronous Communications"**
(2661, 2653)
Covers procedures and hardware for implementing character-oriented and bit-oriented protocols in a data communications network.
Signetics TB-4001 (3pp)

2 **"Building a Complete FSK Modem Using XR-2211 and XR-2206"**
(XR2206, XR2211)
Describes the construction of a modem system using frequency shift keying for serial data transmission.
Exar AN-20 (4pp)

3 **"Bussing with MECL 10,000 Integrated Circuits"**
(MC10111, MC10123)
Describes use of MECL 10,000 circuits in high speed data transmission systems with emphasis on transmission line construction and termination.
Motorola AN-726 (6pp)

4 **"Convolution: Digital Signal Processing"**
Discusses the Impulse function and its effect on linear systems in terms of the fundamental convolution theorem. Analytical and illustrative examples.
National Semiconductor AN237 (8pp)

5 **"Data Bus and Differential Line Drivers and Receivers"**
(DS7820, DS7830, DS7831, DS7832, DS7833, DS7834, DS7835, DS7836, DS7837, DS7838, DS7839, DS8820, DS8830, DS8831, DS8832, DS8833, DS8834, DS8835, DS8836, DS8837, DS8838, DS8839, DS1488, DS1489)
Includes schematics and describes the operation of these line drivers, receivers and transceivers.
National AN-83 (12pp)

6 **"Data Comm Async and Sync Transmission"**
(2661, 2652, 2681)
Reviews fundamental considerations and describes controller chips for implementing synchronous and asynchronous data transmission.
Signetics TB-4004 (3pp)

7 **"Data Comm Error Control"**
(2652, 2653, 2661)
Describes chip set for implementing error control at system protocol levels in data communication systems.
Signetics TB-4003 (3pp)

8 **"Data Comm Protocols"**
(2652, 2653, 2661)
Discusses procedures, conventions and hardware governing data transfer between data-processing machines.
Signetics TB-4000 (2pp)

9 **"Device Operation and System Implementation of the Asynchronous Communications Interface Adapter"**
(MC6850)
Provides information on ACIA transmitter and receiver operation, initialization, status register bits, use in a microcomputer based communications system, software requirements, and transmission subroutines.
Motorola AN-754 (11pp)

10 **"Digital Data Comm Message Protocol"**
(2652, 2661, 2653)
Covers operating modes, format, control set, error detection and recovery, and implementation of message protocols.
Signetics TB-4005 (3pp)

Data Transmission (cont)

11 **"Eight Channel Codec Demonstrator"**
Explains how a codec demonstrator system is used to provide a working digital transmission system incorporating eight analog input channels digitally interfacing to eight output channels.
Precision Monolithics AN-37 (8pp)

12 **"FOT/FOR110 Link Length Calculations"**
(FOT110, FOR110)
Transmitter output power, receiver sensitivity, and optical fiber characteristics are all taken into account in determining the maximum length achievable in a fiber optic link. Four sample calculations are given.
Burr Brown AN-111 (4pp)

13 **"Fiber Optic Transmitter Accepts Most Analog Signals"**
(3714T)
Describes the capabilities of the 3714T fiber optic transmitter and its applications in the transmission of low-level analog signals in hostile environments. Various implementations for different system requirements are discussed.
Burr-Brown AN-110 (7pp)

14 **"Four-Channel Shared Codec"**
(DAC-86, DAC-87)
Describes a four-channel CODEC assembled from LSI components as a cost-effective digital transmission system requiring a relatively small number of devices. The system makes use of a single COMDAC® companded DAC-86 or DAC-87 digital-to-analog converter for both encoding and decoding.
Precision Monolithics AN-38 (6pp)

15 **"Generate 4-Channels of Analog Output Using AD 7542 12-Bit D/A Converters and Control the Lot with Only Two Wires"**
(AD7542)
Shows how a Universal Asynchronous Receiver Transmitter can be configured to drive four AD 7542 12-bit D/A converters.
Analog Devices AN-E909-15

16 **"High Speed Digital Communications"**
(HD245, HD246, HD545, HD546)
Describes the use of the HD-245 family in a current mode digital communication system (up to 2 Mbs over 1,000-ft-long line.)
Harris Semiconductor AN-205 (4pp)

17 **"Integrated Circuits for Digital Data Transmission"**
(DS7820, DS7830, DS8820, DS8830)
Describes the operation and use of the DS7830 line driver and DS7830 line receiver for transmission systems using twisted-pair lines. Includes a mathematical design analysis of this line receiver.
National Special Functions Databook AN-22 (16pp)

18 **"LSI Modem Integration: The Communication Link for the 1980s"**
(MC6860, MC14412, AMD7910, TMS99532, CH1810, CH1812)
Gives a historical perspective on the role of modems in data communications equipment and explains modem functions.
Cermetek (17pp)

19 **"Low Speed Modem Fundamentals"**
(MC6860)
Describes interface circuitry and performance of the MC6860 low speed modem. Evaluation of the system performance in the presence of Gaussian noise is given, as well as a brief description of data couplers.
Motorola AN-731 (15pp)

INTERFACE

Data Transmission (cont)

1 **"Low Speed Modem System Design Using the MC6860"**
(MC6860)
Describes the MC6860 modem. Provides filter design tables and equations to develop a complete 100 series compatible system.
Motorola AN-747 (13pp)

2 **"Manchester II Transfers Data with Integrity, Speed"**
(HD6409)
Discusses Manchester serial data transmission theory, offers comparisons between industry standard codes, and describes operation of the HD6409.
Harris Semiconductor AR-14

3 **"Mixed Data Link Extends Length, Reduces Cost"**
(3712R, 3713T)
Describes how to use a fiber-optic transmitter and receiver to form a fiber-optic data link for extending link length or reducing link cost. Provides a performance chart for comparing various cable types.
Burr-Brown AN-97 (4pp)

4 **"Monolithic Bipolar Circuits for Video Speed Data Conversion"**
(TDC1007J, TDC1016J)
Describes the "flash" A/D converter, TDC1007J, and the TDC1016J, D/A converter. Also included are appoaches for extending the performance of the TDC1007J.
TRW/LSI A-5

5 **"PABX Circuit Line Using the AMS2002"**
(AMS2002)
Outlines a typical PABX line circuit design using the AMS2002 subscriber line interface circuit. Focuses on performance parameters that are influenced by the choice of external components.
Aptek Microsystems (3pp)

6 **"Receiver/Transmitter Noise Immunity"**
(HD245, HD246, HD545, HD546)
Discusses HD-245 transmitter/receiver system noise: External magnetic and capacitive effects, crosstalk, and ground line noise. Includes a comparison with voltage mode and differential voltage switching type systems.
Harris Semiconductor AN-207 (4pp)

7 **"Revised Data Interface Standards"**
(MC1489, MC1488, MC3487, MC3488, MC3486, AM26LS31, AM26LS32, SN75172, SN75174, SN75173, SN75175)
Provides a brief overview and comparison of the RS232-C, RS422, RS423, RS449, and RS485 communication interface standards.
Motorola AN781A (96pp)

8 **"Stable FSK Modems Featuring the XR-2207, XR-2206, and XR-2211"**
(XR2206, XR2207, XR2211)
Describes designing a modulator-demodulator for use in frequency-shift keying. Circuit designs and the adjustment procedure for frequency tuning is included.
Exar AN-01 (5pp)

9 **"Successive Approximation Register Design for Multi-Channel Codec's"**
Explains a low cost, high speed Successive Approximation Register (SAR) design for use with 24-channel or 32-channel encoders.
Precision Monolithics AN-31 (4pp)

Data Transmission (cont)

10 **"Synchronous Data Link Control (SDLC)"**
(2652)
Reviews protocols used in data communications networks; discusses message format, error detection and the operation of a controller chip.
Signetics TB-4002 (4pp)

11 **"The HD-6402 CMOS UART"**
(HD6402)
Discusses the power consumption, data format, control, and microprocessor interface for a universal asynchronous receiver-transmitter.
Harris TB-41 (5pp)

12 **"Transmission Line Characteristics"**
(DM7400, DS7820, DS7830, DS75452, DS8820, DS8830)
Describes the characteristics of digital signals in transmission lines and the characteristics of the line that affect transmission quality. Also compares the performance of unbalanced and balanced circuits in digital systems.
National Interface Databook AN-108 (6pp)

13 **"Transmission Line Drivers and Receivers for RS-422 and RS-423"**
(9636A, 9637A, 9638)
Reviews requirements of EIA standards RS-422 and RS-423 for interfacing data terminals and data-communications equipment with transmission live drivers and receivers. Describes theory and application of Schottky driver and receiver circuits. Circuit diagrams, performance curves and tables, and system design assistance are provided.
Fairchild Application Note 354 (16pp)

14 **"Transmission and Multiplexing of Analog or Digital Signals Utilizing the CD4016A Quad Bilateral Switch"**
(CD4016A)
Describes features and operation of this switch. Discusses applications, including switching, gating digital or analog signals, multiplexing and demultiplexing, D/A conversion, sample and hold, and squelch-control.
RCA ICAN-6601 (12pp)

15 **"Tri-State FSK Modem Design Using XR2206/XR2211"**
(XR2206, XR2211)
Design of FSK modems with carrier detection and control capability are discussed.
Exar AN-05 (6pp)

16 **"Understanding the FOT110 Fiber Optic Transmitter"**
(FOT110)
Reviews the operating parameters and features of the FOT110 fiber optic transmitter. Outlines the differences of the KG and KG-IR versions in output wavelength, power, and speed. Fiber selection and connector maintenance are also covered.
Burr-Brown AN-108 (4pp)

17 **"Use of the AM26LS29, 30, 31, and 32 Quad Driver/Receiver Family in EIA RS-422 and 423 Applications"**
(AM26LS29, AM26LS30, AM26LS31, AM26LS32)
Reviews use of the devices in implementing RS-422 and 423 with emphasis given to the EIA RS-422 balanced interface.
Advanced Micro Devices (12pp)

18 **"Using the 2653 Polynomial Generator and Checker"**
(2653)
Describes techniques and hardware for monitoring parallel data transfer between a CPU or memory and a serial receiver/transmitter or other bus oriented device.
Signetics AN-400 (16pp)

INTERFACE

Data Transmission (cont)

1 **"Using the 2670/71/72/73 CRT Terminal Chip Set"**
(2670/71/72/73)
Reviews major elements of a CRT terminal and covers the application of a display character and graphics generator, a programmable keyboard and communication controller, a programmable video timing controller and a video and attributes controller.
Signetics AN-401 (16pp)

Drivers

2 **"7106/7107 Digital Meter Applications"**
(7106, 7107)
Presents diagrams, circuit board design, test information and sources of supply for building LED or LCD digital meters around display driver ICs.
Teledyne Semiconductor AN-11 (6pp)

3 **"A Dot Matrix Controller System Design Using the 10938/10939 Display Drivers and R6500/1EB Microcomputer"**
(10938, 10939, R6500/1)
Explains how the 10938/9 dot matrix display controller chip set can be used to drive a 40-character, 5x7 dot matrix vacuum fluorescent display. Operation of the general-purpose MOS/LSI controller chip set is explained, a demonstration system is described, and several methods are given for software control of display drivers and output.
Rockwell No. 2163 (4pp)

4 **"A Monolithic IC Series for Gas Discharge Display Interface"**
(UDN-7180, UDN-7183A, UDN-7184A, UDN-7186A)
Describes a series of high-voltage drivers that provide an inexpensive, easy-to-use interface for gas discharge displays.
Sprague Electric Data Book WR-503 (6pp)

5 **"A New Driver Circuit for Displays"**
(U1096B)
Explains how the U1096B universal integrated driver component can be used to control high-resolution LED displays.
AEG-Telefunken SI 5.81 (9pp)

6 **"A New IC Optimizes High-Speed Power MOSFET Drive for Switching Power Supplies"**
(UC1706)
Explains the dynamics of high-speed power MOFSET switching as an aid in defining optimum gate drive signals for specific applications.
Unitrode U-98 (12pp)

7 **"A Novel Process for VF Display Drivers"**
Discusses the appropriateness of VF displays for automotive applications, and the mechanisms of high-voltage VF display drivers
National Semiconductor AN-378 (6pp)

8 **"A Single IC Digital Thermocouple Thermometer Using the 7106"**
(7106)
Describes design and application details of a thermometer circuit built around a display driver and for use with type J and K thermocouples.
Teledyne Semiconductor AN-12 (2pp)

9 **"AC Plasma Display"**
(SN75500A, SN75501A)
Describes the construction and operating characteristics of ac plasma displays. Explains drive requirements and how they are met by the SN75500A and SN75501A.
Texas Instruments SCA-204 (17pp)

Drivers (cont)

10 **"An IC Driver for a PM Bifilar Stepping Motor"**
(UCN-4202A)
Describes a custom circuit and its application in a stepping motor interface.
Sprague TP80-4 (2pp)

11 **"Applications of the MOC3031 and MOC3041 Zero-Crossing Triac Drivers"**
(MOC3031, MOC3041)
Describes the MOC3031 and MOC3041 optically isolated triac drivers and their application in high-wattage incandescent lamps, matrix switching, power relays, ac motors, and a microprocessor interface.
Motorola AN916 (7pp)

12 **"BCD Analog-to-Digital Converter Interface to Dot Matrix LEDs"**
(TSC14433)
Describes a TSC14433 ADC interface to 4x7 dot matrix LEDs. Within each dot matrix LED digit is an integrated circuit display latch, decoder and driver. The numeric display font matches the style used in alpha character displays so that instrument panels can be designed without resorting to mixed readout styles.
Teledyne Semiconductor AN-19 (2pp)

13 **"Basics of EL Panel Drive Techniques"**
(HV04, HV03, HV05, HV06)
Describes the application of a family of high-voltage display drivers to a 512x256-pixel electroluminescent display.
Supertex Inc. AN-5 (4pp)

14 **"BiMOS II High-Speed Interface ICs for Peripheral and Power Driver Applications"**
(UDN-5800, UDN-5810, UDN-5820)
A second generation of chips combining CMOS logic and bipolar power brings new functions and higher switching speeds at reduced cost. Describes drivers for displays, motors, printers, relays and solenoids.
Sprague Electric WR-203 (12pp)

15 **"CMOS Line Drivers"**
States reasons for using CMOS line drivers.
National AN-158 (4pp)

16 **"Design Background"**
(PBL 3717)
Explains the advantages and disadvantages of different schemes for driving a four-phase unipolar permanent magnet stepping motor.
RIFA I-01 (7pp)

17 **"Designing an LCD Dot Matrix Display Interface"**
(MM58201)
Explains the drive requirements of a liquid crystal display and the use of a CMOS LCD driver capable of handling up to 192 segments. Initialization, graph, text, and scroll programs are given.
National Semiconductor AN-350 (19pp)

18 **"Driving 7-Segment Gas Discharge Display Tubes with National Semiconductor Circuits"**
(DS8880, DS8884A, DS8885, DS8887, DS8889, DS8980, DS8981)
Explains each of the device's characteristics and operation. Application circuit diagrams also supplied.
National Interface Databook AN-84 (4pp)

INTERFACE

Drivers (cont)

1 **"Driving 7-Segment LED Displays with National Semiconductor Circuits"**
(DM5446A, DM5447A, DM5448A, DM7446A, DM7447A, DS75491, DS75492, DS7856, DS7858, DS8856, DS8857, DS8858, DS8861, DS8863, DS8864, DS8865, DS8866)
Discusses configurations and construction of 7-segment LEDs and drive modes. Describes BCD to 7-segment decoder drivers, BCD to 7-segment LED drivers, MOS to LED segment drivers, four and five segment drivers, as well as digit drivers. Describes calculator and digital clock applications.
National AN-99 (12pp)

2 **"Driving Burroughs' Bar Graph Display"**
Shows the use of comparators and flip-flops to drive these displays.
National DB-4 (2pp)

3 **"Driving Vacuum Fluorescent Displays"**
(UCN4810A, TL4810A, SN75512A, SN75513A, SN75501C)
The basic operating principles of vacuum fluorescent displays are discussed. Details various drive schemes for different display formats.
Texas Instruments SCA-208 (16pp)

4 **"Driving Vacuum Fluorescent Displays"**
(UCN4810, TL4810A, SN75512A, SN75513A, SN75501C)
Describes principles of vacuum fluorescent displays including construction and performance trade-offs; also discusses interface driver/circuit requirements and features.
Texas Instruments SCA-208 (16pp)

5 **"Expanding the Frontiers of IC Interface for Electronic Displays"**
Presents interface IC basics concerning incandescent, gas discharge, LED, plasma, fluorescent, and hot wire displays.
Sprague Electric AN29304.9 (10pp)

6 **"Hermetic BiMOS ICs"**
(UCS-4401H, UCS-4801H, UCS-4807H, UCS-4808H, UCS-4810H, UCS-4815H, UCS-4820H)
Presents simplified applications of BiMOS power drivers in interfacing with printers, displays, and motors.
Sprague WR-198 (6pp)

7 **"High-Voltage Interface Power Drivers"**
(UDN-6116A-1 to 7186A, UHP-500, UHP-533, UCN-5823, UCN-5910A, ULN-7001, ULN-7074B)
Discusses the advantages of using high supply voltages and describes a range of bipolar, DMOS, and BiMOS III driver ICs for display and printer applications.
Sprague Electric Company WR-207 (12pp)

8 **"Integrated Circuits for Current Sourcing Applications"**
(UDN-2850A, UDN-2580A, UDN-2980A, UDN6100A)
The use of source drivers can eliminate noise and transient problems by separating the logic and power returns. This note describes a number of applications of source drivers for controlling printers, relays, and displays.
Sprague Electric Data Book WR-503 (10pp)

9 **"Interface Considerations for Numeric Display Systems"**
(MC14511, MC14543)
Gives basic information on LDC, LED, gas discharge, fluorescent and incandescent displays. Discusses interfacing 7 segment displays to logic with emphasis on multiplexed systems.
Motorola AN-741 (25pp)

Drivers (cont)

10 **"Interface ICs for Motor Drive Applications"**
(UCN-4202A, UDN-2949Z, ULN-3701Z, ULN-2800A, UDN-2980A, UDN-2580A, UDN-2845B, UDN-2846B)
Presents simplified applications for monolithic bipolar ICs in driving stepper motors, ac and dc motors, and brushless dc motors.
Sprague WR-185 (7pp)

11 **"Line Driver and Receiver Considerations"**
(MC1488, MC1489, MC3486, MC3487, MC3488, MC10194, MC75107, MC75110)
Discusses line driver and receiver related topics including system description, definition of terms, important parameter measurements and application example.
Motorola AN-708A (18pp)

12 **"Line Drivers and Receivers: SN55107 Series"**
(SN55107)
Gives technical details on the SN55107 Series of line drivers and receivers. Emphasizes system considerations, including different cabling types and transmission configurations.
Texas Instruments CA-130 (33pp)

13 **"MOS Clock Drivers"**
(MH0007, MH0009, MH0012, MH0013)
Lists the characteristics of various MOS clock drivers and how they differ in their input stages.
National Special Functions Databook MB-9 (2pp)

14 **"New Power-Interface ICs"**
(UDN-2585A, UDN-2595A, UDN-6514A, UDN-2541B)
Provides overview of new monolithic bifilar ICs for high-current or high-voltage, medium-power switching applications.
Sprague TP83-10 (8pp)

15 **"PIC900 H-Bridge Motor and Solenoid Driver"**
(PIC900)
Gives the characteristics and applications of a hybrid motor driver comprised of four Darlington transistors and two base-emitter pull-up resistors.
Unitrode U-92 (10pp)

"PIN Diode Drivers"
See listing under (Interface) Switches. (National)

16 **"Power Integrated Circuits for Motor-Drive Applications"**
(UDN-2953, UDN2953, UDN-2878W, UDN-2879W, UDN-2965W, UDN-2993B, UCN-5800A, UCN-5801A, UCN-5813B, UCN-5814B, ULN-2074B, UDN-2941B, UDN-2952B, UDN-2952W, UDN-2935Z, UDN-2950Z, UDN-2933B, UDN-2934B)
Describes a broad range of power ICs usable in motor-drive applications, including unipolar and bipolar drives, full- and half-bridge drivers and Darlington switches.
Sprague Electric WR-202 (16pp)

17 **"Reliability of Series ULN-2000A and ULN-2800A High-Current Darlington Drivers"**
(ULN-2000A, ULN-2800A)
Explains the qualification tests, accelerated tests, and burn-in used to measure the reliability of ICs, with emphasis on this series of high-current Darlington drivers. Supplies information for calculating failure rate at normal junction operating temperatures.
Sprague EB-29304.6 (4pp)

18 **"Reliability of UDN-6100A High-Voltage Display Drivers"**
(UDN-6100A)
Summarizes the accelerated life tests performed on the UDN-6100A series of high-voltage display drivers, and provides information required for calculating failure rate at any junction operating temperature.
Sprague EB-29313.2 (4pp)

INTERFACE

Drivers (cont)

1 **"Self-Scanned Cascade Readout of the LS7060 and LS7061"**
(LS7060, LS7061)
Describes two 32-bit binary counter-latch-output driers and their use in system-oriented pulse counting applications.
LSI Computer Systems (3pp)

2 **"Series ULN-2000A Darlington Transistor Arrays"**
(ULN-2000A, ULN-2800A)
Describes several applications of these high-voltages, high-current Darlington transistor arrays for driving resistive, inductive or tungsten filament loads up to 125 watts.
Sprague Electric Data Book WR-503 (7pp)

3 **"Series ULN-2000A Darlington Transistor Arrays-Description and Application"**
(ULN-2001A, ULN-2002A, ULN-2003A, ULN-2004A)
Describes circuit capabilities and its use as an interface.
Sprague AN29304.9 (7pp)

4 **"Simple Voltmeter Monitors TTL Supplies"**
(LM3914)
Explains how to use a bar/dot display driver chip, a few resistors and some LEDs to make a simple expanded-scale voltmeter that runs on 5V and provides TTL undervoltage and overvoltage warning signals.
National Semiconductor Linear Brief 48 (2pp)

5 **"Solving the Stepper Motor Interface Problem"**
(SI7250)
Discusses the application of the SI7250 H-Bridge predriver and controller and MOSPOWER devices to efficient interfacing of a TTL-level output from a microcontroller to a stepper motor.
Siliconix AN82-1 (4pp)

6 **"TSC700A Drives LED Display for TSC14433 ADC"**
(TSC14433, TSC700A)
Provides details on a digital measurement system using a 3-1/2 digit analog to digital converter and a high-segment-current driver. The 0.05% resolution system requires only a 5-volt supply with a TSC7660 dc to dc converter generating the A/D converter's negative 5-volt supply.
Teledyne Semiconductor AN-21

7 **"TSC7211AM/TSC7212AM Display Driver Interface"**
(TSC7211AM, TSC7212AM)
Covers the interface between 4-digit CMOS drivers for LED and LCD displays and a Z-80, 6502, or 8080 microprocessor.
Teledyne Semiconductor AN-18 (4pp)

8 **"The MM58348/342/341/248/242/241 Directly Drive Vacuum Fluorescent Displays"**
(MM58348, MM58342, MM58341, MM58248, MM58242, MM58241)
Demonstrates several ways in which a series of display drivers can be configured to drive and control a wide range of VF displays.
National Semiconductor AN-371 (12pp)

9 **"Trends in IC Interface for Electronic Displays"**
(UDN-2980, UDN-6116A, UDN-2580A, ULN-2804A, UCN-4810A, UCN-4815A)
Discusses IC interface drivers for different types of displays, device technologies, packaging and future trends.
Sprague Electric Data Book WR-503 (11pp)

Drivers (cont)

10 **"Two-Digit Serial Input LED Display Driver Using TSC9404"**
(TSC9404)
Describes the use of the TSC9404 to minimize the number of I/O lines needed for a serial to 16-bit parallel output conversion. Application illustrates driver circuit for a two-digit, seven-segment LED display.
Teledyne Semiconductor AN-20 (2pp)

11 **"UC1637/2637/3637 Switched Mode Controller for DC Motor Drive"**
(UC1637, UC2637, UC3637)
Complete details on switched mode controllers for DC motors, including operating principles and methods of optimizing performance.
Unitrode U-102 (11pp)

"Using the MM5704 Keyboard Interface in Keyboard Systems"
See listing under (Digital) Encoders (National)

Encoders

12 **"60 Key Keyboard Encoder Applications Note"**
Describes implementation of keyboard scanning, key debouncing, key encoding, and key data availability indication functions.
Signetics AN-002 (8pp)

13 **"60-Key Keyboard Encoder"**
(82S105)
Explains the basics of keyboard encoder operation and the implementation of a 60-key encoder device utilizing the 82S105 bipolar programmable state machine.
Signetics AN-002 (6pp)

14 **"A Single Channel Codec Integrated Circuit"**
(ZNPCM1)
Includes tables of recommended operating conditions, electrical characteristics and pinouts for 24-pin DIP codec. Single-channel, 30-channel, and switching application examples include circuit and timing diagrams.
Ferranti (15pp)

15 **"AY5-3600 Keyboard Encoder Operation"**
(AY5-3600)
Characterizes the device and supplies a chart of the code assignments it uses.
General Instrument Bulletin 1402 (3pp)

16 **"Cascading Encoder-Decoder"**
(ED5, ED9, ED11, ED15, DC-7)
Explains how a simple, low-cost method can be implemented for addressing a large number of remote devices.
Supertex AN-4 (4pp)

17 **"Control Circuits for LED Scales with Linear and Logarithmic Behavior"**
(U237B, U247B, U257B, U267B)
Discusses circuit design for driving up to 10 LEDs in a linear or logarithmic bar display. Includes suggestions for using various colors for emphasizing selected parts of the display.
AEG-Telefunken Halbleiter Informationsdienst 8.78 (3pp)

18 **"Designing with the HD-0165 Keyboard Encoder"**
(HD0165)
The organization and truth table for this encoder are presented. The use of two circuits for encoding up to 256 keys, battery operation, examples of a teletypewriter keyboard and universal keyboard encoders are described.
Harris Semiconductor AN-204 (8pp)

INTERFACE

Encoders (cont)

1 **"ED Family of Remote Control Encoder/Decoders"**
(ED-5, ED-9, ED-11, ED-15)
Describes how to incorporate the ED-15, ED-11, ED-9, and ED-5 into user's system. Contains information covering various transmission media, as well as using ED with microprocessor interface.
Supertex 1 (9pp)

2 **"Exclusive-OR Code Converters"**
(DM7086)
Covers use of exclusive-OR gates to do Gray/Binary and Binary/Hamming code conversion.
National DB-2 (2pp)

3 **"Harris CMOS Manchester Encoder-Decoders"**
(HD15531, 15530, 6408)
Describes the advantages of Manchester II code over NRZ and four CMOS Manchester encoder-decoders operating at data rates up to 1 MHz.
Harris TB020 (2pp)

4 **"Keyboard Encoder and PROM/EPROM Application"**
(AY5-3600)
Describes use of the device in 64 key 4 mode and 90 key 4 mode applications. The device's binary outputs are organized to provide direct interface with a PROM/EPROM thus enabling the specific pattern format to be verified prior to a "custom" encoder commitment.
General Instrument Bulletin 1401 (4pp)

5 **"RS-232C Compatible Data Encryption Unit"**
(T7000, T7001)
Describes the design, operation and construction of a low-cost, RS-232C Compatible Data Encryption Unit used to encode digital data.

6 **"Using the MM5704 Keyboard Interface in Keyboard Systems"**
(MM5704)
Discusses features, operation, and programming of this device. Discusses use with the MM5702 timing and control chip of the Microprogrammable Arithmetic Processing System, and in a standard ASCII encode system.
National AN-52 (11pp)

Error Correction and Detection

7 **"Error Correction Codes"**
(2104A)
Examines different methods of error encoding, especially Error Correction Codes, to increase the reliability of a memory system.
Intel 1985 Memory Components Handbook AP-46 (12pp)

8 **"Error Detection and Correction Using SN54/74ALS632 through SN54/74ALS635"**
(SN54ALS632, SN74ALS632, SN54ALS633, SN74ALS633, SN54ALS634, SN74ALS634, SN54ALS635, SN74ALS635)
As the density of dynamic RAMs increases, so does the probability of errors. This note describes how these error correction and detection circuits ensure data integrity for 16-, 24-, and 32-bit systems.
Texas Instruments SDAA001 (8pp)

9 **"Error Detection and Correction Using SN54/74LS630 and SN54/74LS631"**
(SN54LS630, SN74LS630, SN54LS631, SN74LS631)
Summarizes the common types of error detection schemes, and describes the functions performed by the SN54/74LS630 and 631 EDAC chips. Also gives details on a memory board implementing the devices.
Texas Instruments SDLA003 (19pp)

Error Correction and Detection (cont)

10 **"Expanding The Versatility of the DP8400"**
(DP8400)
The addition of error correction capabilities to a memory requires extra memory, longer access times and additional control circuits. This note shows how the DP8400 can minimize the last two and, for some data word lengths, reduce the amount of extra memory required.
National Semiconductor AN-306 (12pp)

11 **"Memory System Reliability with ECC"**
(2117)
Presents step-by-step procedures for calculating memory system reliability.
Intel 1985 Memory Components Handbook AP-73 (45pp)

12 **"DP8400s in 64-Bit Expansion"**
(DP8400)
Provides information on the DP8400 error detection/correction chips parallel expansion method, which allows fast check-bit generation, error detection, and error correction. Includes diagrams for 64-bit configuration.
National Semiconductor AN-308 (8pp)

Line Circuits

13 **"Advanced Schottky Family of Bus Transceivers"**
(SN54/74ALS245, SN54/74'AS245, SN54/74'ALS620A, SN54/74'AS620-'623, SN54/74'ALS638-9A, SN54/74'AS638-9, SN54/74'AS640-645A)
Discusses applications of the Advanced Schottky family of bus transceivers in high-performance digital logic systems.
Texas Instruments SDAA005 (19pp)

MOS/Bipolar

"Applications of the RCA CD4093B COS/MOS Schmitt Trigger"
See listing under (Digital) CMOS (RCA)

14 **"COS/MOS Interfacing Simplified"**
(CD4000 Series)
Covers interfacing 4000A and B series with TTL, DTL, ECL, NMOS, PMOS, industrial and power control circuits, op amps and displays.
RCA ICAN-6315 (7pp)

"Interfacing COS/MOS with Other Logic Families"
See listing under (Digital) CMOS (RCA)

15 **"MM54C/MM74C Voltage Translation/Buffering"**
(MM54C901, MM54C902, MM54C903, MM54C904, MM74C901, MM74C902, MM74C903, MM74C904)
Interfacing PMOS to CMOS, CMOS to CMOS with different voltage levels, and CMOS to two standard TTL loads, are illustrated using 74C901 series devices.
National MB-18 (2pp)

INTERFACE

MOS/Bipolar (cont)

1 **"TTL/MOS/DTL Interfaces"**
Techniques for coupling the above devices and characteristics of the interfaces.
National MB-7 (2pp)

Multiplexers

2 **"New Multiplexers Simplify System Design"**
(HI-506L, HI-507L)
Gives applications for the HI-50XL family of latched, overvoltage protected multiplexers.
Harris AN-545 (8pp)

3 **"Single Supply Operation of PMI Multiplexers"**
(MUX-08, MUX-16, MUX-24, MUX-28, MUX-88)
Explains single supply operation as it applies to BIFET and CMOS multiplexers. Common applications are in microprocessor-based, single supply data acquisition systems.
Precision Monolithics AN-32 (2pp)

4 **"Specifying and Testing Multiplexers"**
Discusses time division multiplexers, including their basic parameters, temperature effects, and parameter testing.
Teledyne Philbrick AN-31 (4pp)

5 **"Understanding Crosstalk in Analog Multiplexers"**
Explains the three crosstalk components, Static (CT), Dynamic (DCT), and Adjacent Channel (ACCT) qualitatively and quantitively. The discussion tells what component(s) should be considered in various applications. The qualitative discussion uses both theoretical and empirical information to arrive at conclusions about what performance should be expected.
Precision Monolithics AN-35 (8pp)

Power Supplies

6 **"Line-Operated Switching Power Supplies"**
(LAS3840)
Discusses line-operated switchers, including how to eliminate transformer imbalance in double-ended switching converters and how to achieve fast switching speeds.
Lambda Semiconductors Applications Handbook V (26pp)

Switches

7 **"A New J-FET Structure—the VARAFET"**
(IT401, IT401A)
Lists advantages of an integrated J-FET switching circuit. Covers cell structure, electrical characteristics and device operation.
Intersil Application Bulletin AO22 (4pp)

8 **"Additional Information on the HI-300 series"**
(HI-300 series)
Discusses "ON" resistance, leakage currents, switching speeds, power supply requirements, internal switch operation and schematics, single supply operation, charge injection power supplies conditions and protective circuitry.
Harris Semiconductor AN-534 (5pp)

Switches (cont)

9 **"Analog CMOS Switches and Multiplexers"**
(AD7501, AD7503, AD7506, AD7507, AD7510, AD7511, AD7513, AD7516, AD7519)
A Selection Guide for Analog Devices line of multiplexers and switches. Includes data sheets, bonding diagrams, application information and terminology.
Analog Devices (40pp)

10 **"Analog Switch Applications in A/D Data Conversion Systems"**
(HI-200, HI-201, HI-300, HI-5900, HI-5901)
Discusses system configurations, analog switch types, CMOS switch selection guidelines and alternate uses of CMOS switches.
Harris Semiconductor AN-531 (4pp)

11 **"Analog Switches and Their Applications"**
Introduces basic semiconductor theory and discusses in detail FET analog switches. Various circuit combinations including driver cicuits, multiplexing, sample-and-hold circuits, N-path filters, and converters are also analyzed.
Siliconix $7.95 (324pp)

12 **"Analog Switches in Sample and Hold Circuits"**
Covers the effects of FET analog switch current handling capability on settling time and the effects of offset characteristics on sample and hold system accuracy. Describes inverting and non-inverting sample and hold circuits.
Siliconix AN74-2 (4pp)

13 **"Analog-Signal Commutation"**
(MM450, MM451, MM454, MM550, MM551, MM552)
Describes dc characteristics involved in MOS IC switching of analog signals when the signal input range varies between ± 10 v.
National Special Functions Handbook AN-33 (6pp)

14 **"Application of the MC3416 Crosspoint Switch"**
(MC3416)
Describes operation and use of this 4 X 4 balanced cross point switch in telephone applications including PABX. Appendices cover dielectric isolation, SCR action and testing.
Motorola AN-760 (15pp)

15 **"Applications of MOS Analog Switches"**
(LH0014, LH0019)
Discusses basic commutation circuits and describes the use of the LH0014 and LH0019 in linear amplifier applications, including reset functions and chopper circuits. Covers use of MOS switches as suppressed carrier double-sideband modulators and double-side-band demodulators. Also describes a circuit for a phase-locked loop AM-FM detector without tuned circuits.
National Special Functions Databook AN-38 (8pp)

16 **"Applications of the MT8804A 8x4 Analog Switch Array"**
(MT8804A)
Provides functional and parametric details of the MT8804A CMOS analog switch array, an 8x4 device with minimal interchannel crosstalk that lends itself to crosspoint switching applications.
Mitel Semiconductor MSAN-101 (16pp)

INTERFACE

Switches (cont)

1 **"CMOS Analog Switches—A Powerful Design Tool"**
Describes CMOS switch construction, characteristics and operating precautions. Applications include: a four channel switch to multiplex a scope input, a low pass filter with digitally controlled frequency response, an amplifier with programmable inputs and gain, a sample and hold circuit, a latching switch, high frequency switching and multiplexer systems.
Siliconix AN75-1 (16pp)

2 **"Common Questions Concerning CMOS Analog Switches"**
(HI-50XX)
Describes power supply considerations, input overvoltage protection and single supply operation.
Harris Semiconductor AN-532 (4pp)

3 **"DG300 Series Analog Switch Applications"**
(DG300, DG301, DG302, DG303, DG304, DG305, DG306, DG307)
Discusses performance characteristics and applications of the DG300 analog switch family. Includes circuit diagrams.
Siliconix AN76-6 (14pp)

4 **"Designing with Monolithic FET Switches"**
Describes MOSFET and JFET switch operation, including driver consideratins.
Siliconix TA73-2 (4pp)

5 **"Driver Circuits for the JFET Analog Switch"**
Discussion and comparison of resistor-coupled diode charge transfer, space transistor charge transfer, and switched resistor driver circuits for JFET switches.
Siliconix AN73-5 (12pp)

6 **"Electronic Switches in NMOS - Silicon Gate Technology"**
(U353M, U354M)
Lists performance parameters for NMOS silicon-gate transistor arrays of up to 5 devices for use as a relay replacement. Includes discussions on electrical principles and large signal operation.
AEG-Telefunken Halbleiter Informationsdienst 11.78 (6pp)

7 **"FETs as Analog Switches"**
General discussion of FET operation: detailed discussion of factors affecting switch performance, including specific load problems and applicable driver circuits.
Siliconix AN72-2 (12pp)

8 **"Features and Applications of RCA IC Zero-Voltage Switches"**
(CA3058, CA3059, CA3079)
Discusses zero-voltage switch operation in general. Operation primarily with thyristors in ac power control and switching applications, including electric heating, oven/broiler control, machine control, light control and industrial systems.
RCA ICAN-6182 (6pp)

9 **"Guide to Analog CMOS Switches and Multiplexers"**
Discusses the dynamic performance of CMOS switches, CMOS protection schemes, and switch/multiplexer terminology. Applications include a sample/hold amplifier, data acquisition system, commutating bandpass filter, and ramp generator.
Analog Devices (8pp)

10 **"High Speed Analog Switches"**
(AM1000, AM1001, AM1002)
Discusses time domain multiplexing, current mode multiplexing, the switching characteristics of the AM1000 JFET switches, and drive circuits.
National AN-53 (6pp)

Switches (cont)

11 **"High Speed MOS Commutators"**
(MM451, MM453, MM454)
Discusses the lowered threshold voltages in commutators, on and off resistances, switching speed, noise and high-frequency noise control.
National Special Functions Databook AN-28 (8pp)

12 **"IC Multiplexer Increases Analog Switching Speeds"**
(DG506, DG181)
Describes single and two level IC multiplexing systems, including the advantages and disadvantages of each.
Siliconix AN73-2 (5pp)

13 **"Interface ICs for Current-Sourcing Applications"**
(UDN-2580A, UDN-2956A, UDN-2980A, UDN-6100A)
Gives basic circuit design ideas using current-sourcing integrated circuits to interface with relays, printers, solenoids, V-F and LED displays.
Sprague WR-189 (10pp)

14 **"New High Speed Switch Offers Sub 50 ns Switching Times"**
(HI-201HS)
Describes applications of the HI-201HS in high-speed multiplexers, high-speed sample and hold, analog switch and op amp circuitry, integrator with start/reset, low pass filter with select break frequency and an amplifier with programmable gain.
Harris Semiconductor AN-543 (7pp)

15 **"PIN Diode Drivers"**
(DH0035, DH003C)
Describes PIN diode switching requirements and application of DH0035 as a driver. Includes discussion of anode ground and cathode ground designs and of repetition rate considerations.
National Special Functions Databook AN-49 (6pp)

"Some Applications of Programmable Power Switch/Amplifier"
See listing under (Linear) Power Control (RCA)

16 **"Switching High-Frequency Signals with FET Integrated Circuits"**
(DG133, DG171, DG181, DG200)
Discussion of DG133/171/181/200 as rf switches. Gives equivalent circuits. "Off" isolation and "On" performance data. Applications: control of video monitor and switching between two video cameras.
Siliconix AN73-3 (16pp)

17 **"The DG308 Digitally Switches Analog Signals"**
(DG308)
Describes a quad, single-pole, single-throw, latchproof CMOS analog switch. Includes applications in programmable gain circuits, peak detector circuits, integrators, and programmable filters.
Siliconix AN83-1 (8pp)

18 **"The IH5009 Series of Low Cost Analog Switches"**
(IH5009 Series)
Describes circuit parameters, logic compatibility, and virtual ground switching applications including 4-channel multiplexer, gain ranging circuit, gain programmable amplifier and 16-channel multiplexer.
Intersil Application Bulletin A0004 (8pp)

INTERFACE

Switches (cont)

1 **"The Versatile DG308 Supercedes 74C901/CD4066 Combination in New Analog Switch Designs"**
(DG308)
The DG308 has an internal level shifter that enables it to replace a pair of chips for switching bipolar analog signals in 4000 Series CMOS logic.
Siliconix DA81-1 (1p)

2 **"The Versatile DG308 Supercedes LM339/CD4066 Combination in New Analog Switch Designs"**
(DG308)
Switching bipolar analog signals in 4000 Series CMOS logic often requires a logic-level shifter between the positive-supply-voltage referenced logic and the plus-minus-supply referenced analog signals. This note shows how the DG308 simplifies logic interfacing by operating directly from a CMOS input.
Siliconix DA81-2 (1p)

3 **"Use CMOS Analog Switches More Effectively When You Consider Them As Circuits"**
(AD7510DI, AD7590DI)
Discusses low-frequency errors in CMOS analog switches due to resistances and current leakage. Focuses on methods of minimizing the effect of variable series-on resistance on circuit accuracy.
Analog Devices (2pp)

LINEAR

Active Filters

1 **"Active Filter Design with IC OP Amps"**
(XR3403, XR4136, XR4202, XR4558)
Provides table of transfer functions and equations for low, high and bandpass filters as well as filter responses for Bessel, Butterworth and Chebychev types. Working schematic of an active filter in a modem application included.
Exar AN-03 (8pp)

2 **"Band-Pass Active Filter with Easy Trim for Center Frequency"**
(1421)
Presents a method of trimming a band-pass active filter circuit to give the exact center frequency desired using just a single resistor trim.

"Function Circuits, Design and Applications"
See listing under (Linear) General (Burr-Brown)

Amplifiers, Operational

3 **"Compensation Techniques for Use with the NE/SE5539"**
(NE5539, SE5539)
Gives details on a pair of ultrahigh-frequency op amp ICs and methods of providing external compensation for gains below 17 dB.
Signetics AN-140 (8pp)

4 **"High-Performance Audio Applications of the LM833"**
(LM833)
Presents methods by which the LM833 dual op amp can deliver improved audio performance.
National Semiconductor AN-346 (9pp)

5 **"Operational Amplifier Parameter Definition and Measurement Guide"**
Defines the parameters involved in op amp specification and gives the fundamentals necessary to duplicate testing procedures for accurate measurement of those parameters.
Teledyne Philbrick AN-23 (8pp)

Amplifiers, Current

6 **"Application of the LH0002 Current Amplifier"**
(LH0002)
Circuit operation. Describes uses in a differential input-output op amp, booster amplifier, level shifter, pulse transformer driver, and transmission line driver.
National Special Functions Databook AN-13 (4pp)

Amplifiers, Instrumentation

7 **"A User's Guide to IC Instrumentation Amplifiers"**
(AD522)
Explains where and when an instrumentation amplifier may best be employed. Provides basic theory, specifications and examples of use.
Analog Devices (12pp)

8 **"Applications of Wide-Band Buffer Amplifiers"**
Describes high and low frequency operation of several wide-band, high-current, unity-gain buffer amplifiers. Discusses application techniques and illustrates their use in driver, sample and hold amplifier, and active filter circuits.
National Semiconductor AN227 (16pp)

Amplifiers, Instrumentation (cont)

9 **"Instrumentation Amplifiers—Versatile Differential Input Gain Blocks"**
(3660)
Describes the feaures and general operation of instrumentation amplifiers. Depicts their use in bridge circuits, in reducing ground loop interference, and in driven guard input circuits.
Burr-Brown AN-75 (6pp)

10 **"Isolation and Instrumentation Amplifiers Designers Guide"**
Primer on the operation, application, and selection of isolation and instrumentation amplifiers.
Analog Devices (20pp)

11 **"OP-10 Instrumentation Amplifier CMRR Versus Frequency Improvement"**
(OP-10)
Discusses optimization of CMRR versus frequency response of a three op amp instrumentation amplifier.
Precision Monolithics AB-2 (1pp)

12 **"Testing of Analog-to-Digital Converters"**
Discusses methods, circuits and instruments for testing accuracy of A/D converters with conversion times under 100μs; includes a circuit for testing high-speed converters with less than 10μs conversion times.
Burr-Brown Research An-100 (6pp)

13 **"The Instrumentation Amp VS the Op Amp—Which, When, & How to Use Them"**
(741)
Discusses four design options: a general-purpose op amp connected as a differential amplifier, an instrumentation amplifier built from several general-purpose op amps, a purchased modular or IC instrumentation amplifier, and a purchased instrumentation amplifier in a box.
Teledyne Philbrick AN-29 (5pp)

14 **"Theory and Applications of Logarithmic Amplifiers"**
(LM331A, LM329)
Describes the design and use of logarithmic and exponential signal processing techniques in instrumentation applications.
National Semiconductor AN-311 (6pp)

Amplifiers, Isolation

15 **"Applications Guide for Isolation Amplifiers and Signal Conditioners"**
(AD289, AD293, AD294A, AD295, AD290A, AD292A, AD284, AD286)
Gives tutorial information on the importance of isolation and the use of isolation amplifiers and signal conditioners in industrial, instrumentation, and medical applications.
Analog Devices AN-G813b-25-3/85 (19pp)

16 **"The Key to Understanding Sources of Error in the ISO100 Isolation Amplifier"**
(ISO100)
Some applications of the ISO100 isolation amplifier require error correction. This note describes how to quantify the effects of errors and identify the most appropriate means of correction.
Burr-Brown AN-126 (8pp)

APP. NOTE DIRECTORY

LINEAR

Amplifiers, Operational

2 **"A High Impedance Hysteresis Circuit"**
(HA-2520, HA-2620)
Describes HA-2520/HA-2620 used as a hysteresis amplifier and covers output voltage limiting.
Harris Semiconductor AN-505 (2pp)

3 **"A Simple Comparator Using the HA-2620"**
(HA-2620)
Describes op amp comparator circuit capable of driving approximately ten logic gates.
Harris Semiconductor AN-509 (1pp)

4 **"A Simple Square-Triangle Waveform Generator"**
(HA-2510, HA-2600, HA-2620)
Circuit for waveform generator using three op amps.
Harris Semiconductor AN-510 (2pp)

5 **"An IC Amplifier User's Guide to Decoupling, Grounding, and Making Things go Right for a Change"**
Contains considerable information on good grounding practices and op amp decoupling.
Analog Devices (8pp)

6 **"An IC Operational-Transconductance-Amplifier (OTA) with Power Capability"**
(CA3094)
Describes what an OTA is and the characteristics of the device. Outlines its use in such consumer applications as a power amplifier and a companion RIAA preamplifier.
RCA ICAN-6077 (12pp)

7 **"Analog Products: Features and Applications"**
Discusses the use of op amps, buffers, and voltage references in instrumentation amplifiers, I/V converters, current transmitters, precision rectifiers, and Wien-bridge rectifiers.
Precision Monolithics Inc. (23pp)

8 **"Analysis and Design of the Op/Amp Current Source"**
Develops expressions for the transfer function and output impedance of voltage controlled op amp current source using both ideal and non-ideal models. Discusses effects of parameter and temperature variations on performance.
Motorola AN-587 (7pp)

9 **"Application of the CA080 BiMOS Op Amp Series in Low-Cost Instruments and Audio Circuits"**
(CA080, CA081, CA082, CA083)
Describes the characteristics of CA080 operational amplifiers and their benefits when used in audio preamplifiers, notch filters, low-current amplification circuits, and ac voltmeter front ends.
RCA ICAN-6933 (2pp)

10 **"Applications of Operational Amplifiers"**
Presents op amp applications including designs for signed controls, processors, waveform generators, and special purpose circuits. Provides information on error sources, circuit values, and design equations.
Burr-Brown $33.50 (220pp)

11 **"Applications of a Monolithic Sample-and-Hold/Gated Operational Amplifier"**
(HA-2420, HA-2425)
Describes HA-2420/2425 circuit. Applications include various track-and-hold/sample-and-hold configurations, an A/D converter, a demultiplexer, an integrated-hold-reset amplifier, a gated operational amplifier, and a peak detector with reset.
Harris Semiconductor AN-517 (8pp)

Amplifiers, Operational (cont)

12 **"Applications of the CA3080 and CA3080A High-Performance Operational Transconductance Amplifiers"**
(CA3090, CA3080A)
This device has an additional control terminal for flexibility. Circuit operation is discussed. Applications covered: communications and industrial systems, modulators, multiplexers, sample and hold circuits, gain control circuits, and micropower comparators. Appendix discusses current mirrors.
RCA ICAN-6668 (16pp)

13 **"Applications of the Gated Linear Amplifier ZN424"**
(ZN424)
Details the operation of the ZN424 and describes a variety of specific applications including filters, comparators, and peak hold circuits.
Ferranti (46pp)

14 **"Applications of the RCA CA3048 Integrated Circuit Amplifier Array"**
(CA3048)
Discusses operating parameters for this 4-amplifier array and covers applications, including Hartley and Colpitts oscillators, an astable multivibrator, four-channel linear mix, and a gain-controlled amplifier.
RCA ICAN-4072 (8pp)

15 **"Applying Dual and Quad FET Op Amps"**
(LF347, LF353)
Shows how dual and quad FET op amps can be used as a temperature controller, high-temperature thermometer, sine wave oscillator, voltage reference, A/D converter and current amplifier.
National Semiconductor AN-262 (7pp)

16 **"Applying a New Precision Op Amp"**
(LM11)
Details characteristics of the LM11 which combines low offset voltage with low bias current. Applications include meters, differential instrumentation amplifiers and coupling with existing fast op amps.
National Semiconductor AN242 (16pp)

17 **"Combine Two Op Amps to Avoid the Speed Accuracy Compromise"**
(3521)
Discusses interconnecting low drift and wideband op amps to form a composite op amp.
Burr-Brown AN-64 (2pp)

18 **"Considerations for Low-Noise Applications"**
(MA-106, MA-333)
Describes a low-noise single-ended input and output preamplifier and JFET op amps. Also discusses several methods of reducing system noise.
Analog Systems AN-1004 (1pp)

19 **"Current Limiting the MA-329"**
(MA-329)
Shows how to select valves of external resistors to determine negative and positive output-current limits.
Analog Systems AN-1005 (1pp)

Amplifiers, Operational (cont)

1 **"D.C. Servo Motor Systems Using the ICH8510"**
See listing under (Linear) Amplifiers, Power (Intersil)

2 **"Design of a Unique Precision Controlled Current Source"**
(3500)
Diagrams a current source using an op amp and a complementary FET pair to form a current source with differential input and bipolar current output.
Burr-Brown AN-74 (2pp)

3 **"Designing Femtoampere Circuits Requires Special Considerations"**
(1702)
Discusses key design considerations for high-impedance, low-current applications of measurement amplifiers.
Teledyne Philbrick AN-3 (4pp)

4 **"Designing Junction FET Input Op Amps"**
(U401, 421 Series)
Discusses the advantages, behavior and design of JFET input operational amplifiers.
Siliconix AN74-3 (17pp)

5 **"Designing with Operational Amplifiers: Application Alternatives"**
Amplifier improvement techniques, signal analyzers, signal conditioners, absolute value circuits, signal generators, computing circuits, data transmission circuits, as well as test and measurement circuits are discussed. Circuit designs and explanations of circuit operation are provided.
Burr-Brown $29.50 (220pp)

6 **"Digital Auto-Zeroing Extends the Capabilities of Semi-Custom CMOS Operational Amplifiers"**
Describes the use of a digital auto-zero technique to reduce the worst-case offset voltage of CMOS metal-gate array op amps to approximately 1 mV. Discusses application of the technique to a heart-rate detector chip.
Telmos AN2 (2 pp)

7 **"Digital Nulling of OP-05 and SSS725"**
(DAC-08, OP-05, SSS725)
Shows digitally controlled offset nulling achieved by imbalancing the first stage collector currents of the op amp with a D/A.
Precision Monolithics AB-3 (1pp)

8 **"Diode-Connected FET Protects Op Amps"**
(BB3528CM)
Shows how to use an FET to protect an op amp from overload in a circuit that measures dielectric properties.
Burr-Brown AN-106 (1pp)

9 **"Fast Settling Operational Amplifier"**
(HA-5190, HA-5195)
Covers operation at elevated temperatures, frequency compensation techniques and performance enhancement methods for op amps used in pulse, RF and video amplifiers, waveform generators, data requisition and instrumentation.
Harris Application Note 525 (4pp)

10 **"HA-5170 Precision Low Noise J-FET Input Operational Amplifier"**
(HA-5170)
Discusses internal design and technology, J-FET noise and trimming of offset voltage. Applications include single op amp instrumentation amplifier, sine wave oscillator, high impedance transducers interface, current source/sink and curent sense circuits.
Harris Semiconductor AN540 (4pp)

Amplifiers, Operational (cont)

11 **"HA-909 Operational Amplifier"**
(HA-909, HA-911)
Discusses applications as a unity gain breadboard op amp, servo preamplifier, high-Q bandpass filter, Wien bridge oscillator, and phase-delay filters.
Harris Semiconductor AN-501 (2pp)

12 **"HA-909 Operational Amplifiers Performance Tailoring"**
(HA-909, HA-911)
Discusses how to optimize HA-909's offset, power dissipation, bandwidth, large signal bandwidth, slew rate, transient response, and stability with reactive loads.
Harris Semiconductor AN-502 (3pp)

13 **"High-Frequency Oscillations and Analog ICs"**
Discusses the various sources of instability in op amps and causes and solutions for parasitic oscillations.
Analog Systems AN-1001 (1pp)

14 **"How To Select Output Amplifiers for CMOS MDACs"**
(AD542, AD544)
Discusses unique problems of amplifying CMOS, multiplying-DAC outputs. Provides performance comparison of two op amp families to aid in selection.
Analog Devices (4pp)

15 **"How to Select Operational Amplifiers"**
Selecting the right op amp for a specific application requires a clear knowledge of design objectives and a firm understanding of what published specifications mean. This note puts the many decision factors into perspective and aids the designer in making meaningful buying decisions.
Analog Devices Application Notes, Vol. 1, 21-3 (6pp)

16 **"How to Test Basic Operational Amplifier Parameters"**
Describes the many pitfalls involved in testing op amp specifications of offset voltage, input bias current, open loop voltage gain, frequency response and CMRR. Includes test-circuit diagrams.
Analog Devices (3 pp)

17 **"IC Power Op Amps (Revised)"**
(μA759, μA791)
Discusses evolution of power op amps with specific reference to the μA759 and μA791. Included are applications to voltage regulators, audio amplifiers and servo motor drivers.
Fairchild AN347 (8pp)

18 **"L144 Programmable Micro-Power Triple Op Amp"**
(L144)
Describes device function, elements of programming, effects of slew rate limiting. Applications discussed include instrumentation amplifier, tone detectors, triple-amplifier active filters, and a micropower double-ended limit detector.
Siliconix AN73-6 (6pp)

19 **"Linear Power Operational Amplifiers"**
(ULN-3751, 3753, 3755)
Gives specifications and applications for a line of single and dual power op amps.
Sprague Electric W-206 (7pp)

20 **"Linearity and the MA-332"**
(MA-332)
Discusses the linearity characteristics of the MA-332 op amp.
Analog Systems AN-1002 (1pp)

APP. NOTE DIRECTORY

LINEAR

Amplifiers, Operational (cont)

1 **"Low Power Operational LH0001 Amplifier"**
(LH0001)
Operation of circuit offering 0.2 mv typical offset voltage at 25°C and quiescent supply currents in 100 μA range.
National Linear Applications Handbook AN-10 (4pp)

2 **"Measurement of Burst (Popcorn) Noise in Linear Integrated Circuits"**
Discusses "pass-fail" criteria and describes a test set-up for measuring burst noise. The set-up includes a high gain amplifier-filter, a bipolar comparator, and a counter-latch-timer control circuit.
RCA ICAN 6732 (8pp)

3 **"Micro Power Applications Collection"**
(OP-20)
Discusses the OP-20 Micro-Power Operational Amplifier as a combination of precision performance, ultra-low supply current and single power supply operation.
Precision Monolithics AN-34 (4pp)

4 **"Micropower Op Amp Family"**
(HA-5141, RC4132, OP-20, LM10C, LM741)
Compares speed/power relationships in op amps, describing applications in a remote sensor loop transmitter, bar-code scanner, monostable multivibrator, and low-voltage Wein bridge oscillator.
Harris AN-544 (6pp)

5 **"Minimization of Noise in Operational Amplifier Applications"**
(OP-07)
Describes internal and external sources of noise. Helps to locate noise sources by frequency. Gives examples of noise calculation using the OP-07 as an example.
Precision Monolithics AN-15 (11pp)

6 **"Monolithic Sample/Hold Combines Speed and Precision"**
(HA-5320)
Describes electrical specifications for the HA-5320 sample/hold amplifiers, including explanation of error sources, and HA-5320 applications.
Harris Semiconductor AN-538 (7pp)

7 **"New Design Techniques for FET Op Amps"**
(LH0022, LH0022C, LH0042C, LH0052, LH0052C)
Gives parameters for LH0022, LH0042 and LH0052 operational amplifiers. Discusses rationale for FETs in these devices, describes the circuits. Describes application as voltage followers, integrators, sample/hold amplifiers, comparators, instrumentation and charge amplifiers.
National Special Functions Databook AN-63 (12pp)

8 **"Operational Amplifier Noise Prediction"**
Provides a noise model, a procedure for computing output noise, and spot noise curves for many Harris amplifiers.
Harris Semiconductor AN-519 (10pp)

9 **"Operational Amplifier Stability: Input Capacitance Considerations"**
(HA-2600, HA-2605)
Discusses overcoming stray capacitance in op amps, such as the HA-2600.
Harris Semiconductor AN-515 (2pp)

10 **"Operational Amplifiers—Design and Application"**
Covers basic theory, amplifier design techniques and applications.
Burr-Brown $33.50 (470pp)

Amplifiers, Operational (cont)

11 **"Power Operational Amplifiers—General Operating Considerations"**
Provides guidelines for operation of power op amps, including discussions of stability, current limit adjust, heat sinking and grounding.
Apex Microtechnology AN-1 (1p)

12 **"Power Operational Amplifiers—Optoelectronic Position Control"**
(PA-07)
Discusses techniques for using power op amps for optoelectronic position control.
Apex Microtechnology AN-2 (2pp)

13 **"Precision Digital Gain Set Applications"**
(LF13006, LF13007)
Outlines several digital gain set applications that provide programming capability in circuits such as filters, precision references, and current sources.
National Semiconductor AN-344 (6pp)

14 **"Precision Digital Gain Set Applications"**
(LF13006, LF13007)
Outlines several digital gain set applications that provide programming capability in circuits such as filters, precision references, and current sources.
National Semiconductor AN-344 (6pp)

15 **"Precision Magnetic Deflection"**
Explains how power op amps provide better precision than single-element drives for current control and other advantages.
Apex Microtechnology (4pp)

16 **"Precision Op Amp on a Semicustom Chip"**
(MONOCHIP)
Discusses building an op amp on a semicustom chip with performance comparable to standard precision units. Covers all phases of design and thermal considerations as well.
Interdesign APN-9 (10pp)

17 **"Precisional Operational Amplifier"**
(μA714)
Describes operation of the μA714 and compares key parameters with other precision op amps. Discusses applications including use as a replacement for chopper-stabilized amplifiers.
Fairchild AN348 (10pp)

18 **"Protect Op Amps from Overloads"**
Discusses protection from power-supply faults, keeping input voltages at safe levels, and limiting output currents.
Burr-Brown AN-60 (3pp)

19 **"Protecting Inputs and Outputs"**
Protecting Inputs and OutputsLINEARAmplifiers, OperationalAnalog Systems AN-1006 (1pp)
Analog Systems AN-1006 (1pp)
Describes methods of protecting signal inputs to op amps to prevent damage from excessive current.
Analog Systems AN-1006 (1pp)

20 **"Simple Precision Millivolt Reference Uses No Zeners"**
(OP-05)
Describes −3.5 mv to 3.5 mv reference built with instrumentation op amp and a potentiometer.
Precision Monolithics AN-10 (1pp)

LINEAR

Amplifiers, Operational (cont)

1 **"Some Recent Application Notes on Operational Amplifiers"**
"How to Select Operational Amplifiers" Discusses selection of the right op amp for a specific application. Includes consideration of gain/bandwidth, offset and drift, current amplifiers, and steady-state vs transient applications.
Analog Devices (6 pp)

2 **"Test Procedures for Operational Amplifiers"**
Circuit for measuring offset voltage, bias current, offset current, open loop voltage gain, common mode and power supply rejection ratios, output voltage/current, power dissipation, and making continuity checks.
Harris Semiconductor AN-508 (2pp)

3 **"The 8007—A High Performance FET-Input Operational Amplifier"**
(ICL8007)
Circuit description, applications as log and antilog amplifiers, photocell amplifier, peak detector, sample and hold circuits, high impedance buffer, and Wien Bridge oscillator.
Intersil Application Bulletin A005 (6pp)

4 **"The HA-2400 PRAM Four Channel Operational Amplifier"**
(HA-2400, HA-2405)
This is a programmable input stage, operational amplifier. This note describes its applications including an analog multiplexer with buffered input and output, an inverting or non inverting amplifier with a programmable gain, a sine wave oscillator with programmable frequency, and a track and hold/sample and hold circuit.
Harris Semiconductor AN-514 (8pp)

5 **"The HA-2530/2535 Wideband High Slew Inverting Amplifier"**
(HA-2530, HA-2535)
Briefly discusses internal circuit. Shows how closed-loop frequency response can be predicted. Describes application as a fast settling coaxial driver, a 10 MHz coaxial line driver, a wide range signal separator, a high frequency triangular wave generator, and a current-to-voltage converter.
Harris Semiconductor AN-516 (11pp)

6 **"The HA-2900 Monolithic Chopper Stabilized Amplifier"**
(HA-2900)
Discusses offset voltage and current drift and chopper stabilization, then describes the circuit. Applications include a high impedance differential instrumentation amplifier, use as an integrator, and several wide bandwidth configurations.
Harris Semiconductor AN-518 (8pp)

7 **"The ICL7650: A New Era in Glitch-Free Chopper Stabilized Amplifiers"**
Discusses the development of a monolithic CMOS chopper-stabilized amplifier that uses a single full-time main amplifier to eliminate output glitches and area- and charge-balancing on the input-switching network to minimize input switching glitches. Includes schematics, operating characteristics and application techniques.
Intersil A053 (16 pp)

8 **"The Monolithic Op Amp: A Tutorial Study"**
Detailed paper on the design of IC operational amplifiers.
National Linear Applications Handbook (18pp)

Amplifiers, Operational (cont)

9 **"The OP-07 Ultra-Low Offset Voltage Op Amp—A Bipolar Op Amp that Challenges Choppers, Eliminates Nulling"**
(OP-07)
Describes circuit design, compares performance to other devices. Covers application in a voltage reference, a high accuracy buffer, a D/A test system, a composite summing amplifier, an absolute value circuit, an analog computer building block, and as a thermocouple amplifier.
Precision Monolithics AN-13 (12pp)

10 **"Typical Operational Amplifier Applications for Modelling, Measuring, Manipulating, and Much Else"**
Describes op amp applications such as a precision variable voltage source, floating supply bridge amplifier, adding subtractor, three-term controller, floating source preamplifier, and current-to-voltage transresistor.
Teledyne Philbrick AN-7 (1pp)

11 **"Understanding and Using the CA3130, 3130A, and 3130B BiMOS Operational Amplifiers"**
(CA3130, CA3130A, CA3130B)
Summarizes the characteristics and unique features of the CA3130 Series of BiMOS op amps. Sample applications include a voltmeter with high input resistance, thermocouple temperature control with zero-voltage load switching, a photodiode current-to-voltage converter, and a precision voltage-controlled oscillator.
RCA ICAN-6386 (5pp)

12 **"Using HA-2539 Very High Slew-Rate Wideband Operational Amplifier"**
(HA-2539)
Includes prototyping considerations, output short-circuit protection, offset voltage adjustment, frequency compensation, composite amplifier scheme and dc error reduction.
Harris Semiconductor AN541 (4pp)

13 **"Using Op Amps in Low Noise Applications"**
Discusses shot noise and noise from source resistances.
Burr-Brown AN-68 (2pp)

14 **"Using the HA-2541"**
(HA-2541)
Describes the HA-2541, a fast, unity gain stable, monolithic op amp, along with prototyping and thermal considerations, and discusses applications in a variety of amplifier types.
Harris AN-550 (6pp)

15 **"Using the HA-2542"**
(HA-2542)
Discusses prototyping guidelines, heat sinking, performance enhancements, and applications of the HA-2542 amplifier.
Harris AN-552 (5pp)

16 **"Using the IT500 Family to Improve the Input Bias Current of BIFET Op Amps"**
(IT500)
Shows how the variation of input bias current with input voltage in BIFET op amps can be reduced by using the IT500 as a preamplifier.
Intersil A050 (1 p)

17 **"Working with High Impedance Op Amps"**
Describes a low offset voltage op amp that also has low input current error, especially at high temperatures. Discusses techniques for eliminating problems with high impedance circuits.
National Semiconductor AN241 (6pp)

LINEAR

Amplifiers, Power

1 **"D.C. Servo Motor Systems Using the ICH8510"**
(ICH8510)
Explains servo systems in general and use of the device for velocity control, position control, and torque control in particular.
Intersil Application Bulletin A026 (4pp)

2 **"Power D/A Converters Using the IH8510"**
See listing under (Interface) Converters (Intersil)

3 **"TBA810S/AS Thermally Protected Power Amplifier"**
(TBA810)
Description of the device followed by discussion of its performance. Also shows examples of use in tone control, TV, radio and tape playback channel applications.
SGS-ATES Technical Note 120 (16pp)

4 **"TBA820 Two-Watt Monolithic Audio Amplifier"**
(TBA820)
Lists main electrical characteristics of device and presents typical applications.
SGS-ATES Technical Note 114 (11pp)

5 **"TCA830S-Thermally Protected Audio Power Amplifier"**
(TCA830S)
Briefly describes how the device functions followed by an examination of performance under different supply and load conditions. Portable AM/FM receiver, intercom, and magnetic tape player circuits are shown.
SGS-ATES Technical Note 126 (15pp)

6 **"TCA940 Fully Protected Audio Amplifier"**
(TCA940)
Presents temperature and output short circuit protection features of the device along with a description of its performance. Illustrates use of the device in a stereo amplifier and an equalized amplifier for magnetic pickups.
SGS-ATES Technical Note 119 (15pp)

7 **"TDA2020/TDA2010 HI-FI Monolithic Amplifiers"**
(TDA2020, TDA2010)
Describes these power amplifiers and how to apply them.
SGS-ATES Technical Note 130 (12pp)

Amplifiers, Preamplifier

8 **"DC Coupled Tape Head Pre-amplifiers"**
(LM1897, 1837)
Explains the problems eliminated by DC coupling tape heads and the advantages of the two-amplifier per channel design of two preamp ICs.
National Semiconductor AN-407 (7pp)

Amplifiers, RF

9 **"A High Gain Integrated Circuit RF-IF Amplifier with Wide Range AGC"**
(MC1590G)
Describes operation and Y parameters of the MC1590G. Applications include mixer plus IF, video, single and two-stage RF amplifiers.
Motorola AN-513 (10pp)

10 **"A Two-Stage 1kW Solid-State Linear Amplifier"**
Discusses the design of 50W and 300W linear amplifiers for the 1.6 to 30 MHz frequency band.
Motorola AN-758 (16pp)

Amplifiers, RF (cont)

11 **"Application of the RCA CA3028A and CA3028B Integrated-Circuit RF Amplifiers in the HF and VHF Ranges"**
(CA3028A, CA3028B)
Describes circuits and operating modes. Covers use as an RF amp, autodyne converter, IF amp, and limiter.
RCA ICAN-5337 (10pp)

12 **"Logarithmic IF Strips Using Monolithic Integrated Circuits"**
(SL521)
Describes operation of this log amplifier in successive detection type IF strips with center frequencies from 10 to 100 MHz. Covers broadband and narrow band circuits and describes in detail a 60 MHz wide-range logarithmic amplifier.
Plessey Semiconductor Technical Communication (3pp)

13 **"Logging IF Strip"**
(SL1521)
Describes a logging IF strip using Plessey IC's.
Plessey Semiconductor (2pp)

Amplifiers, Special Purpose

14 **"Applications for Models 4350/4351 and 4362/4363 Logarithmic Amplifiers"**
(4350, 4351, 4362, 4363)
Dicusses methods of changing sensitivity factors and reference voltage and current in logarithmic amplifiers.
Teledyne Philbrick AN-14 (4pp)

15 **"Designer's Guide to Logarithmic Amplifiers"**
(4351)
Summarizes the basic theories involved in using transistors and op amps to perform accurate, wide-range logarithmic conversion. Also discusses the practical considerations of designing circuits using logarithmic devices.
Teledyne Philbrick AN-12 (10pp)

16 **"How to Specify Parameters of Nonlinear Circuits"**
(4351)
A detailed specifier's guide for amplifiers with stable nonlinear outputs, this note describes the common problems such amps can overcome.
Teledyne Philbrick AN-15 (5pp)

17 **"Logarithmic Amplifiers and Operators Parameter Definition and Measurement"**
(4350, 4351, 4362, 4363)
Explains major operating parameters of logarithmic amplifiers and describes relevant testing methods.
Teledyne Philbrick AN-27 (3pp)

18 **"Specifying and Testing Sample-Hold Amplifiers"**
Covers the basic operating parameters of S/H amplifiers and parameter testing procedures.
Teledyne Philbrick AN-30 (5pp)

19 **"Using the 8048/8049 Monolithic Log-Antilog Amplifier"**
(ICL8048, ICL8049)
Describes in detail the operation of the 8048 log amp, and its counterpart, the 8049 antilog amp.
Intersil A007

LINEAR

Amplifiers, Video

1 **"Gated Video Amplifier Applications Using the MC1545"**
(MC1545)
Reviews the operation of the MC1545 and discusses some applications for the device. Included are several modulator types, temperature compensation of the active gate, AGC, gated oscillators, FSK systems, and single-supply operation.
Motorola Semiconductor AN-491 (16pp)

"Television Video IF Amplifier Using Integrated Circuits"
See listing under (Linear) Consumer, TV (Motorola)

2 **"The SG1401 Video Amplifier"**
(SG1401, SG3401)
Describes a number of applications for SG1401-SG3401 general-purpose, wide-frequency-range amplifiers.
Silicon General AN-SG1401 (2pp)

3 **"Video Applications"**
(HA-5190, HA-5195)
Discusses power supply requirements and temperature considerations, and provides design and prototyping tips for using an op amp as a video amplifier.
Harris AN526 (5pp)

Amplifiers, preamplifier

4 **"Audio Preamplifiers"**
(MONOCHIP)
Provides schematics and parameters for using the device in three separate preamplifier configurations.
Interdesign APN-11 (6pp)

Arrays

5 **"Application of the RCA CA3018 Integrated Circuit Transistor Array"**
(CA3018)
Array of two isolated silicon epitaxial transistors plus two transistors with emitter-base common connections, suited for closely matched device requirements or interconnections with non-integrable components. Applications covered include IF-RF, video, AGC, audio and dc amplifiers.
RCA ICAN-5296 (5pp)

6 **"Application of the RCA CA3019 Integrated-Circuit Diode Array"**
(CA3019)
Describes circuit configuration, operating characteristics and applications, including balanced modulator, high-speed gates, balanced mixer, and a ring modulator.
RCA ICAN-5299 (6pp)

7 **"Super-Matched Differential Pair"**
(MONOCHIP)
Illustrates matching capabilities of interconnected NPN devices on the Monochip family. The circuit described consists of 2 transistors implemented by interconnecting 18 small geometry devices in parallel.
Interdesign APN-20 (5pp)

8 **"Using the SL362C Low Noise Transistor Pair"**
(SL362)
Provides general data on noise performance plus application in DC to 200 MHz amplifier.
Plessey Semiconductor Technical Communication (4pp)

Communications

9 **"2400 BPS DPSK Modem System Using the MC6172/6173"**
(MC6172, MC6173)
Describes the design procedure for implementing a low-cost modem system using the MC6172/6173 chip set as a core.
Motorola Semiconductor AN-870 (14pp)

10 **"A CB Audio Compression System"**
(MONOCHIP)
Describes using the device to provide an on-chip regulator, audio pre-amp, AGC amplifier, DC volume control, and a headphone driver amplifier for use in a CB transceiver.
Interdesign APN-10 (7pp)

11 **"A Four-Wire Full Duplex 1200 Baud Modem Implementation Using the MC145450 and the MC145415"**
(MC145450, MC145415)
Outlines how a 1200-baud four-wire modem may be used as a basis for a Bell 202T modem where four dedicated wires are available for long-distance communications.
Motorola AN-904 (4pp)

12 **"A Manchester-Coded Fiber-Optic Serial Data Link Interfacing Parallel Data Buses at Data Rates to 200 kbytes/sec"**
(FOE300B, FOR361B, DP8342, DP8343)
Describes a fiber optic data link that accepts parallel data at rates up to 200 kbytes/sec and transmits serial data over distances to 1 km.
National Semiconductor AN-323 (8pp)

13 **"A Monolithic Subscriber Line Interface Circuit"**
(HC-5502A, HC5504)
Gives a functional description and pin descriptions of PBX SLICS.
Harris Semiconductor AN-533 (6pp)

14 **"An Introduction to Mitel DTMF Receivers"**
(MT8865, MT8870, MH88210, MH88305)
Illustrates the cost, performance and real-estate benefits of the DTMF signaling medium for conventional dialing applications, as well as for certain data transmission and remote control applications.
Mitel Semiconductor MSAN-106 (7pp)

15 **"Applications of Hybrid Active Filters to Telecommunication Systems"**
(AF133, AF134)
Transmit and receive filters in 8 kHz sample rate PCM systems such as D3 channel bank and band splitting filters for DTMF receivers are described, and their application to these systems is discussed.
National AN-221 (4pp)

16 **"Applications of the MT8860 Family of DTMF Receivers"**
(MT8860, MT8862, MT8863, MT8865, MH88210, MH88305)
The MT8865 filter and MT8860 decoder can be used to update rotary-dial telephones by tone-to-pulse conversion and to create a call restrictor for a private telephone or private branch exchange. Applications include the remote control of test, measurement, and industrial equipment, and of home appliances, alarm systems, and unattended message recorders.
Mitel Semiconductor MSAN-105 (7pp)

17 **"Applications of the MT8870 Integrated DTMF Receiver"**
(MT8870)
Discusses the operation of DTMF receivers in general and the MT8870 in particular. Includes several applications in DTMF receiver systems, mobile radios, and remote control systems.
Mitel MSAN-108 (27pp)

LINEAR

Communications (cont)

2 **"CMOS 300 Baud Modem"**
(MM74HC942)
Discusses the advances in CMOS and circuit design technology that have made possible a high-performance, low-power, Bell 103 compatible single-chip modem.
National Semiconductor AN-349 (6pp)

3 **"Current Sources"**
(MK50992)
Discusses the use of constant-current sources in pulse dialer application circuits.
Mostek Applications Brief (2pp)

4 **"DTMF Receiver System"**
(MK5102, MK5103)
Describes the construction of a DTMF receiver system.
Mostek Applications Brief (2pp)

5 **"Data Conversion, Switching, and Transmission using the Intel 2910A/11A Codec and 2912 PCM Filter"**
(2910A/2911A, 2912)
Provides general telecommunications concepts and terminology. Includes technical reviews of codecs and PCM filters and gives application guidelines.
Intel AP-64 (40pp)

6 **"Delta Modulation for Voice Transmission"**
Provides introduction to delta modulation basics and describes various applications, including telecommunications and audio delay lines, in which it can be used.
Harris Semiconductor AN-607 (6pp)

7 **"Design Considerations for a DTMF Receiver System Using the MK5102-5"**
(MK5102-5)
Describes all of the requirements for building a high-quality DTMF receiver using the MK5102-5 DTMF decoder and hybrid filters, including output formatting, receiver testing, input squaring, squaring circuit-to-decoder coupling, and power supply and band separation filter considerations.
Aptek Microsystems (9pp)

8 **"Designing Second-Generation Digital Telephony Systems Using the Intel 2913/14 Codec/Filter Combochip"**
(2913, 2914)
Describes the features and capabilities of the 2913 and 2914 codec/filter combochips, and relates these capabilities to the design and manufacture of transmission and switching linecards.
Intel AP-142 (18pp)

9 **"Designing with TCM1500A Bell Tone Ringer/Detector Family"**
(TCM1501A, TCM1505A, TCM1506A, TCM1512A, TCM1520A)
Discusses the use of BIDFET ICs to cost effectively replace up to ten discrete components. Applications include telephones, auto-answer modems, and small-current power supplies.
Texas Instruments AR-SCTA001 (28pp)

10 **"Digital Line Interface Application Guide"**
(MT8970, MH89700)
Presents diagrams of sample digital line interfaces, including an ST-Bus port to a PABX backplane, a microprocessor port to a PC, and a digital channel bank.
Mitel MSAN-113 (11pp)

Communications (cont)

11 **"Digital Line Interface Module Application Guide"**
(MH89700)
Gives simplified block diagrams of DLIM links and interfaces to a digital trunk, PABX backplane, and controlling microprocessors communicating with mainframes, local area networks, desktop computers, and CAD/CAM equipment.
Mitel MSAN-110 (11pp)

12 **"Digital Line Interface Module User's Guide"**
(MH89700)
Gives operating characteristics and application details on a general-purpose interface module for use in digital telephony.
Mitel MSAN-111 (31pp)

13 **"Digital Telephony and the Integrated Circuit CODEC"**
(TP3000, TP3001)
Discusses in detail PCM CODECs. Covers theory, μ-law and A-law characteristics, and device specifications. Also provides test controller examples, transmission applications, and switching applications.
National AN-215 (16pp)

14 **"Dual Tone Decoding"**
(XR567, XR2567)
Discusses and presents diagrams for a fast, narrow band tone decoder, a touch-tone decoder, and a low cost frequency indicator.
Exar AN-08 (2pp)

15 **"EX-C277 Low-Voltage PCM Repeater IC"**
(XR-C277)
Explains PCM repeater fundamentals, device operation, and presents schematic for a repeater application.
Exar An-04 (6pp)

16 **"Electronic Tone Ringer to Replace the Telephone Bell"**
(ML8204, ML8205)
Investigates the considerations involved in defining an electronic tone ringer to replace the mechanical telephone bell. Illustrates a tone ringer using the ML8204, including construction and electrical and acoustical characteristics.
Mitel Semiconductor MSAN-103 (7pp)

17 **"Full-Duplex 1200 BPS/300 BPS Modem System"**
(XR2120, XR2123, XR14412)
Describes a full-duplex modem system operating at 1200 baud synchronous with phase-shift-keying encoding or 300 baud asynchronous with frequency-shift keying.
Exar AN-25 (3pp)

18 **"Gain Measurements in a CODEC System"**
(TP3000)
Explains aspects of telecommunication measurement techniques and units as they apply to the single channel CODEC.
National AN-219 (4pp)

19 **"Glossary of Digital Telecommunications Terms"**
Presents definitions of terms commonly encountered in telecommunications in relation to digital switching and transmission of speech signals.
Mitel Semiconductor MSAN-102 (7pp)

20 **"HC-55516/32 CVSD Concept and Operations"**
(HC55516, HC55532)
Outlines Continuously Variable Slope Delta Modulation and compares it to pulse code modulation.
Harris Semiconductor (5pp)

LINEAR

Communications (cont)

1 **"HD-15530/31 Product is MIL-STD-1553A"**
(HD15530, HD15531)
Describes the HD-15530 and its application to the MIL-STD-1553 protocol for a twisted-pair, party-line bus.
Harris TB-15 (2pp)

2 **"High Performance PCM Repeater Using XR-C262"**
(XR-C262)
The design principle and the electrical characteristics of the XR-C262 high performance PCM repeater IC are described. Circuit connection and application examples are given in its use in 1.5 Megabit or 2 Megabit PCM systems.
Exar AN-10 (8pp)

3 **"High-Frequency FSK Modem Design"**
(XR-2206, XR210)
Describes the design and construction of a 100-kilobaud full-duplex FSK modem.
Exar AN-26 (6pp)

4 **"Hybrid Fiber Optic Transmitter Serves Analog Instrumentation Requirements"**
(FOT114)
Describes several applications of this fiber optic transmitter in gathering analog data in industrial environments.
Burr-Brown AN-116 (8pp)

5 **"Logarithmic Units of Measure in Telecommunications"**
An introduction to the logarithmic units used in the telecommunications industry.
RCA ICAN-7037 (4pp)

6 **"MK5380 Typical Telephone Application"**
(MK5380)
Presents a scheme for using the MK5380 tone dialer in a telephone dialing system.
Mostek Applications Brief (4pp)

7 **"MT8970/MH89700 User's Guide"**
(MT8970, MH89700)
Describes general-purpose interface parts for use in digital telephony.
Mitel MSAN114 (31pp)

8 **"MT8972 Application Circuits"**
(MT8972)
Discusses line connection, generation of bus timing signals, microprocessor interfacing, and integrated voice and data.
Mitel Issue 1 (7pp)

9 **"Manchester Encoding and Decoding for Local Area Networks"**
(8002)
Describes discrete implementation of encoder/decoder circuitry.
SEEQ (16pp)

10 **"Microcontroller Implementation of an Intelligent, Full Duplex, 300 Baud Modem"**
(COP2440)
Describes a cost-effective microcontroller implementation of a full duplex, 300-baud frequency shift keyed modem. The approach shifts the focus from traditional hardware-dominated solutions to a software adaptation of the modem.
National Semiconductor AN-324 (6pp)

11 **"Modem Modules: The Complete Data Communications Solution"**
(CH1765)
Describes hybrid modem modules that eliminate the additional design work required when using single-chip modems.
Cermetek AN-72 (5pp)

"Modems"
See listings under (Interface) Data Transmission

Communications (cont)

12 **"Monolithic Dual-Tone Multi-Frequency Receiver"**
(SSI201)
Describes device and its operation, gives performance data and three application circuits: a 16-channel remote control, a 2-of-8 decoder, and a DTMF to rotary dial pulse converter.
Silicon Systems (8pp)

13 **"Monolithic Modem Chip Eases Phone Access"**
(MM74HC943)
Describes a single-chip CMOS modem device which, together with a few peripheral ICs, allows you to configure a simple, inexpensive microprocessor-telephone interface system with autodial and autoanswer capabilities.
National Semiconductor AN-394 (12pp)

14 **"One-Chip Telephone"**
(PBL 3780)
Describes the operating characteristics of a complete electronic telephone chip with DTMF signaling. Topics covered include line impedance, microphone selection, gain regulation, and DTMF interfacing.
RIFA PBL 3780 (12pp)

15 **"Optimum Hybrid Design"**
Presents a method by which the dynamic range of a modem can be increased.
National Semiconductor AN-397 (15pp)

16 **"PCM Line Interface"**
(XR-T5680)
Gives details on a monolithic PCM transceiver used in short-line PCM transmission applications.
Exar AN-31 (5pp)

17 **"PCM Repeater Application Notes"**
(TCM 2101, TCM 2102)
Covers the key features, operations, and applications of PCM repeater/regenerators. Topics covered include data recognition and slicing, output data latches, line drivers, and timing waveforms.
Texas Instruments (34pp)

18 **"Picture Plotter Data Transmission System"**
(R24DC/V96P/1, AIM 65/40)
Note describes a picture plotter data transmission system handling both video and text data via the domestic telephone switched network.
Rockwell AN-637 (22pp)

19 **"Pulse Dialer Comparison"**
(MK5098, MK5099, MK50981, MK50982, MK50992)
Compares the major differences between Mostek pulse dialers.
Mostek Applications Brief (6pp)

20 **"Quality of Received Data for R24 Modem"**
(R24)
Gives characteristics and meanings of the digital signals involved for quadrature eye pattern and phase error generation for a 1200/2400-baud modem module. Typical external decode circuitry is illustrated.
Rockwell AN-608 (10pp)

LINEAR

Communications (cont)

1 **"R24 Modem Options"**
(R24)
Discusses the user-selectable options of a modem module, and presents guidelines for configuring a 2400-baud modem.
Rockwell AN-607 (14pp)

2 **"R24DC Interface to U.S. Switched Telephone Network"**
(R24DC)
Explains the FCC regulations relevant to connecting a modem directly to the domestic telephone network.
Rockwell AN-622 (7pp)

3 **"R24DC Modem Options"**
(R24DC)
Outlines a modem's interface options, detailing the implementation of such functions as auto-answering and origination.
Rockwell AN-624 (5pp)

4 **"R24DC Modem/EIA RS-232-C Interface"**
(R24DC)
Explains how to interface a modem with TTL/CMOS electrical characteristics to an RS-232-C connector.
Rockwell AN-619 (2pp)

5 **"R24LL Modem Options"**
(R24LL)
Explains the various user-selectable options of a modem module and presents some general guidelines for configuring a 2400-baud modem.
Rockwell AN-635 (11pp)

6 **"R24LL Modem/EIA RS-232-C Interface"**
(R24LL)
Describes the RS-232-C serial interface and its use with a CMOS/TTL-compatible modem module.
Rockwell AN-623 (2pp)

7 **"S2559 Digital Tone Generator"**
(S2559)
Describes a tone generator designed specifically to implement a dual tone telephone dialing system.
American Microsystems ANT01 (12pp)

8 **"SL560 Low Noise Amplifier Owner's Manual"**
(SL560)
Describes operation of a high-power 50-ohm amplifier, includes design examples of a 2-channel, variable-gain preamplifier.
Plessey Semiconductor (9pp)

9 **"SL600 Series—Integrated Circuits for Radio Communications"**
(SL600 Series)
Describes circuits and applications for the following: RF/IF amplifiers; limiting RF amplifier/detector; AGC generators; AF amplifier, VOGAD side tone amplifier, AM detector, AGC amplifier and SSB demodulator; multimode detector; microphone/headphone amplifier; double balanced modulators; and a square log device. Describes synchrodyne, superhet, SSB and multimode receivers; SSB and AM transmitters; SSB transceiver, a multi/mode transceiver and a Morse keyer.
Plessey Semiconductor Applications Manual (92pp)

10 **"Speakerphone Design Using XR-T6420-1 and XR-T6421"**
(XR-T6420-1, XR-T6421)
Illustrates a speakerphone circuit consisting of two audio channels, a control circuit, and a hybrid interface circuit.
Exar AN-30 (4pp)

Communications (cont)

11 **"Subscriber Line Control Circuits"**
(TCM3101)
Describes a subscriber line control IC that combines digital and analog functions in a single CMOS chip.
Texas Instruments (10pp)

12 **"T-1 Primer"**
(R8040, R8050, R8060)
Details the carrier and pulse code modulation techniques of an NMOS LSI tri-port memory, serial transmitter, and serial receiver.
Rockwell AN-310 (55pp)

13 **"TD1 (10371) Standalone"**
(10371, 10706)
This note describes the connections required to use a telecommunications data interface for standalone serial operation with a clock generator supplying A and B clocks.
Rockwell AN-618 (2pp)

14 **"Telephone Dialing Techniques Using the MC6805"**
(MC6805)
Illustrates two cost-effective methods of utilizing the M6805 family of microcomputers for telephone dialing. Hardware and software are given for both Dual Tone Multi-Frequency (DTMF) and rotary pulse-type dialing systems.
Motorola Semiconductor AN-940 (18pp)

15 **"The CMOS Bit Rate Generator"**
(HD4702)
A tutorial on a programmable CMOS bit-rate generator and its applications.
Harris TB-40 (4pp)

16 **"The HC-550X Telephone Subscriber Line Interface Circuits"**
(HC-550X)
An introduction to the HC-550X family of SLICs, which integrate most of the BORSCHT functions of the traditional hybrid and transformer interface circuits onto a single chip.
Harris AN-549 (19pp)

17 **"The Subscriber Line Card in a Distributed Control Switching System"**
(TP3110, TP3120)
Describes a digital line interface controller (DLIC) and associated set of integrated circuits that form a major portion of a complete subscriber line card subsystem. The DLIC is a multi-purpose system interface and control circuit for a line card of between four and thirty-two subscribers. The same circuit if also useful as the interface device for trunk, special service, maintenance and administration circuit cards.
National Semiconductor AN-316 (6pp)

18 **"The TCM1705A and TCM1706 Speech Transmission Circuit for the Telephone Instrument"**
(TCM1705A, TCM1706)
Describes the functional characteristics of a pair of speech transmission ICs for designing electronic telephones. Discusses dc characteristics, gain regulation, amplifier configurations, dynamic range, and bridge ratio.
Texas Instruments (13pp)

19 **"Understanding Telephone Key Systems"**
Explains telephone key systems, presenting a theoretical architecture based loosely on many of the 16-station key systems now in existence.
Motorola Semiconductor AN893 (7pp)

LINEAR

Communications (cont)

1 **"Using Integrated Detector/Preamplifiers in Fiber Optic Systems"**
(MC75452, MFOE102F)
Discusses the advantages of using an integrated detector/preamplifier for fiber optics communication links by (1) simplifying circuit design and layout and (2) allowing the entire "front-end" of the receiver to be enclosed in a shielded connector.
Motorola AN-814 (4pp)

2 **"Using the S3525A/B DTMF Bandsplit Filter"**
(S3525A/B)
Presents applications of this bandsplit filter in DTMF receiver circuits.
American Microsystems (26pp)

3 **"V27P/1 and V96P/1 4800/9600 BPS Modem Interfacing"**
(V27P/1, V96P/1)
Provides some basic techniques for control and interface of 4800 and 9600-baud modems. Typical user-controlled interfaces are included for TTL, CMOS, switch-selectable, and user strap-selectable options.
Rockwell AN-617 (4pp)

4 **"XR-212ACS Performance Testing"**
(XR-212ACS)
Explains test procedures for a 300/1200 bps full-duplex modem system.
Exar AN-29 (2pp)

5 **"XR-212AS Modem System"**
(XR-212AS)
A description of a four-chip Bell 212A modem set, functions, relationships, and testing procedures.
Exar AN-28 (2pp)

6 **"XR-C240 Monolithic PCM Repeater"**
(XR-C240)
Provides device description, description of circuit operation, and schematics for a typical repeater system.
Exar AN-02 (6pp)

Comparators

"A Simple Comparator Using the HA2620"
See listing under (Linear) Amplifiers, Operational (Harris)

7 **"AM685/AM686/AM687: Designing with High-Speed Comparators"**
(AM685, AM686, AM687)
Gives information on comparators, relaxation oscillators, operating frequency, offset errors, and input hysteresis.
Advanced Micro Devices Analog and Communications Products Data Book (10pp)

8 **"Application of Programmable Micropower Comparators"**
(L161)
Describes the device and how to program it. Also describes the effects of programming on AC characteristics, limit, zero crossing, and level detectors; DC to DC converter applications.
Siliconix AN76-7

9 **"High-Speed Comparator Applications"**
(SP9750, SP9685, SP9687)
Describes a family of high-speed comparators and circuits for A/D converters. Reviews all parallel, parallel/series and successive approximation conversion techniques.
Plessey (50pp)

Comparators (cont)

10 **"RC4805 High Speed Precision Latching Comparator"**
(RC4805)
Describes the principles of operation and details several applications of a high-speed latching comparator.
Raytheon Semiconductor AN27 (16pp)

"Radiation Testing of Linear Microcircuits"
Includes the 702. See listing under (Linear) General. (Fairchild).

11 **"The 725 Op Amp as a Low Level Comparator"**
(PM725)
Provides the circuit and design curves for a submillivolt level comparator based on the 725 op amp.
Precision Monolithics AN-25 (4pp)

12 **"Varying Comparator Hysteresis without Shifting Initial Trip Point"**
Describes adding a positive feedback circuit to introduce precise variable hysteresis into the usual comparator switching action.
Burr-Brown AN-62 (1pp)

Consumer, AM/FM

13 **"AM and FM Integrated Circuits for Electronically Tuned Radios"**
(LM1865, LM1863)
The increasing popularity of digital tuning systems and the anticipated introduction of AM stereo broadcasts has motivated the development of new signal-processing ICs. This note discusses applications of these devices to achieve more features and better performance, particularly in automobile radios.
National Semiconductor AN-382 (14pp)

14 **"AM-FM Radio Designs Using the ULN-2242A, ULN-2241A and ULN-2240A Integrated Circuits"**
(ULN-2242A, ULN-2241A, ULN-2240A)
Describes ICs containing all the active circuits needed for the AM tuner, FM IF amplifier and detector of a radio receiver. Details options for implementing these functions.
Sprague AN27121.63 (14pp)

15 **"AM/SSB Transceivers and Noise Blanking Using SL1600 Series Circuits"**
(SL1623, SL1626, SL1640, SL1641)
Describes the sub-systems used in AM-SSB transceivers.
Plessey Semiconductor (10pp)

16 **"An AM Radio IC for Electronically Tuned Radios"**
(LM1863)
Provides complete circuit board layout and typical performance curves for an AM radio using the LM1863 signal processing circuit. The circuit is especially suited for radios with varactor tuning and frequency synthesis.
National Semiconductor AN-381 (14pp)

17 **"An AM Receiver Using the Plessey SL1600 Series"**
(SL1600 Series)
Describes the design of a simple AM receiver.
Plessey Semiconductor (7pp)

18 **"An Am Radio IC For Electronically Tuned Radios"**
(LM1863)
Provides complete circuit board layout and typical performance curves for an AM radio using the LM1863 signal processing circuit. The circuit is especially suited for radios with varactor tuning and frequency synthesis.
National Semiconductor AN-381 (14pp)

LINEAR

Consumer, AM/FM (cont)

1 **"An SSB Transceiver for Citizens' Band Using Plessey SL1600 Integrated Circuits"**
(SL1600 Series)
Describes the design of an SSB transceiver.
Plessey Semiconductor (4pp)

2 **"Application of the CA3089E FM-IF Subsystem"**
(CA3089)
Discusses stability considerations and following circuits: quadrature-detector, audio and AFC, mute, tuning meter and rf-AGC, if amplifier/detector system and stereo decoder. Also covers operation at frequencies other than 10.7 MHz.
RCA ICAN-6257 (8pp)

3 **"Applications of the One-Chip-Radio Integrated Circuit Family"**
(TDA1083, U410B, U411B, U416B, U417B, U418B)
Gives sample applications of the U410B 1W audio amplifier, U411B 1W audio amplifier with variable gain, U417B and U418B single-chip radio ICs, U416B RF section of the U418B with an additional audio preamplifier, and TDA 1083 standard single-chip radio IC.
AEG-Telefunken SI 2.81 (8pp)

4 **"Binary Synthesizers Users Guide"**
Full details on components of a two-device binary synthesizer. Includes programming information.
Plessey Semiconductor (13pp)

5 **"Designing FM Tuners with TDA1062 and TDA1093 Integrated Circuits"**
(TDA1062, TDA1093)
Includes functional diagrams, schematics, and typical performance charts along with discussion of FM tuner design.
AEG-Telefunken (46pp)

6 **"Development of High-Quality Receivers for A-M Stereo"**
(ULN2241A, ULN2249A)
Outlines circuit techniques for achieving high-quality AM stereo receivers using existing ICs. Includes two circuit designs for driving A-M stereo decoders.
Sprague Electric Data Book WR-503 (4pp)

7 **"Development of High-Quality Receivers for AM Stereo"**
(ULN-2241A, ULN-2249A)
Gives design parameters for rf and if sections of am stereo receivers with examples utilizing standard integrated circuits.
Sprague TP80-5 (5pp)

8 **"Frequency Selective AM Detection Using Monolithic Phase-Locked Loops"**
(XR2228, XR215, XR2212)
Design of frequency selective coherent AM and AM/FM demodulator systems using these devices is described.
Exar AN-13 (4pp)

9 **"IF Amplifier/Detectors for FM Receivers"**
(SL6600, SL6640, SL6650, SL6690)
Describes monolithic ICs containing an IF strip, an FM demodulator and a squelch system for use in FM receivers for mobile, portable,base-station and paging systems. Provides circuit diagrams of typical applications and includes printed circuit layouts and component location.
Plessey (32pp)

10 **"Integrated Circuits for FM Broadcast Receivers"**
(CA3005, CA3011, CA3012, CA3013, CA3014)
Discusses circuits for FM tuner, IF amplifier, limiter, and detector applications.
RCA ICAN-5269 (7pp)

Consumer, AM/FM (cont)

11 **"Integrated-Circuit Stereo Decoder Using the CA3090AQ Stereo Multiplex Demodulator"**
(CA3090AQ)
Gives circuit description. Describes the LC oscillator, reactance, stereo defeat, dc coupled flip-flop preamplifier and phase splitter circuits.
RCA ICAN-6259 (10pp)

12 **"Manual and Automatic FM Tuning System Using Economega I"**
(Economega, AY3-8203, ER1400, MEM4956)
Describes a system that allows manual tuning of a Goodman 1-20 tuner with non-volatile electronic storage of tuning data for 16 stations. Diagrams, schematic.
General Instrument Bulletin 0414 (4pp)

13 **"Radio Receiver Frequency Counter/Clock"**
Supplies diagram and operating instructions for using each device to display time or frequency on a 3½ digit display.
General Instrument Bulletin 0411 (3pp)

14 **"SL1600 Series Transceiver Applications"**
(SL1600 Series)
Discusses simple SSB and multimode transceiver design.
Plessey Semiconductor (32pp)

"Scanning Logic for RF Scanner-Receivers Using CMOS Integrated Circuits"
See listing under (Digital) CMOS (Motorola)

15 **"TDA1083—Integrated Circuit for AM/FM Receivers"**
(TDA1083)
Shows external connections for using integrated receiver circuit in low and medium power AM/FM radios, VHF and microwave receivers, and in TV sound channels.
AEG-Telefunken Halbleiter Informationsdienst 2.78 (11pp)

16 **"TDA1200 FM-IF System for High Performance Radio Receivers"**
(TDA1200)
Gives a detailed description of the device. Describes relative performance of device when used in an FM tuner, an AM/FM car radio, and a portable AM/FM radio.
SGS-ATES Technical Note 117 (12pp)

17 **"The Design of Programmable Dividers for UHF and VHF Synthesizers"**
(SP8000 Series)
Details considerations for designing a programmable frequency synthesizer using high-speed frequency dividers and standard TTL devices. Example problems demonstrate device selection procedures.
Plessey AN2 (24pp)

18 **"ULN-2204A AM/FM Receiver System"**
(ULN-2204)
Presents operation of device and discusses typical applications.
Sprague AN-27121.51 (12pp)

19 **"VHF Synthesizer"**
(SP1648, SL1521, SP8690, SP8790, SP8760)
Describes a phase-lock loop synthesizer used in marine UHF radio telephone, weather broadcasts, air-traffic control and the amateur 2-meter band. Provides electrical diagrams and circuit board layout.
Plessey (3pp)

APPLICATION NOTE DIRECTORY

LINEAR

Consumer, Audio

1 **"A Non-Complementary Audio Noise Reduction System"**
(LM1894)
Deals with the design and operating characteristics of the LM1894, a single-ended noise reduction system for sources that are not encoded.
National Semiconductor AN-386 (10pp)

"An AGC Building Block"
See (Linear) Consumer, TV (Interdesign)

2 **"An Electronic Music Synthesizer Using the XR2207 and the XR2240"**
(XR2207, XR2240)
The design of a simple, low-cost music synthesizer system is described.
Exar AN-15 (2pp)

3 **"Application of Audio Amplifier - Transistor Array ICs"**
(LM389)
Discusses the use of audio amplifier ICs with on-chip transistor arrays in a variety of audio circuits including a dc-dc converter, bistable touch switch, frequency standard, oscillator and logarithmic amplifier.
National Semiconductor AN-264 (5pp)

4 **"Applications for Audio and Electronic Music"**
(SSM2030, SSM2040, SSM2050)
Analysis of the 2030 voltage controlled oscillator, the 2040 voltage controlled filter and the 2050 transient generator in electronic music systems. Discusses error sources and techniques for improving accuracy and temperature stability. Circuit diagrams are included.
Solid State Micro Technology for Music (8pp)

5 **"Audio Amplifiers"**
Discusses basic design considerations, performance capabilities, and circuit configurations for audio amplifiers intended for a wide range of power-output levels. Covers preamplifiers, intermediate stages, overload protection circuits, as well as audio output circuits. Features circuit diagrams and per-data for a wide variety of practical circuits, including discrete-component types, integrated-circuit types, or a combination of discrete components and integrated circuits.
RCA APA-551 (104pp) $5.00

6 **"Audio Noise Reduction and Masking"**
(LM1894)
Describes the DNR non-complementary noise reduction system in terms of functional blocks and the psychoacoustic background necessary to understand the operating principles.
National Semiconductor AN-384 (6pp)

7 **"Build a Simple Comb-Filter or Flanger with a Bucket Brigade Delay Line"**
(SAD1024A)
Describes a flanger (electronic sound modifier) and what is needed to build one.
Reticon AN-113 (4pp)

8 **"Cassette Tape Players using TDA7270"**
(TDA7270)
Describes circuit operation and gives application guidelines for an IC that provides control functions for a cassette/radio unit.
SGS-ATES DN347 (8pp)

Consumer, Audio (cont)

9 **"DC Coupled Tape Head Pre-amplifiers"**
(LM1897, LM1837)
Describes the use of two dc coupled tape head preamplifiers in a low-noise, high-gain and low-distortion audio cassette playback circuit.
National Semiconductor AN-407 (8pp)

10 **"DNR Applications of the LM1894"**
(LM1894, LM832)
Describes applications of this Dynamic Noise Reduction chip in audio and video tape recorders, radio and TV receivers, and automobile radio-cassette receivers.
National Semiconductor AN-390 (9pp)

11 **"M252 and M253 Rhythm Generators for Electronic Organs"**
(M252, M253)
Defines and describes rhythm generators. Presents these two devices, and describes their use in electronic organs.
SGS-ATES Technical Note 131 (21pp)

"TCA600/900 and TCA610/910 Integrated Motor Speed Regulators"
See listing under (Linear) Industrial Control (SGS-ATES)

12 **"TDA105M—Cassette Recorder Preamplifier with ALC"**
(TDA1054M)
Discusses features of the device and preamplifier noise. Applications in Hi-Fi, stereo, and dynamic range compressors are described.
SGS-ATES Technical Note 124 (24pp)

13 **"The Use of Floating Point Arithmetic in Digital Filters and Equalizers"**
Describes floating point processors and how they are used in digital audio systems to provide noise control, accurate response control, and maintenance of effective signal-to-noise ratio.
TRW LSI Products TP-29

14 **"Use of Analog Delay Lines for Audio Speed Change without Pitch Changes"**
(SAD1024A)
Describes technique for increasing or slowing the speed of a recording.
Reticon AN-112 (4pp)

15 **"Writing Music for the AY3-1350 Tunes Synthesizer"**
(AY3-1350)
Provides coding scheme for writing music to be incorporated in a PROM and played back by a music synthesizer chip.
General Instrument Bulletin 0502 (4pp)

Consumer, TV

16 **"A High Stability Syn-AGC and Horizontal-Vertical Countdown System for 525-Line Color Television Receiver Applications Using the RCA CA3154G and CA3157G Integrated Circuits"**
(CA3154, CA3157)
Provides detailed description of each circuit and how they are used in 525-line color TV applications. Contains schematics and waveforms for selected terminals.
RCA ICAN-6802 (20pp)

LINEAR

Consumer, TV (cont)

1 **"A New Low-Level Luminance Processing System"**
(CA3143, CA3144)
In addition to performing the traditional functions of peaking, gain control, subcarrier removal, and black-level clamping for color television receivers, the Colortrak luminance processing system handles nonlinear transient compression and ambient light tracking.
RCA ICAN-7173 (6pp)

2 **"A Single IC for the Complete PIX-IF-System in TV Receivers"**
(CA3068)
Gives a detailed description of the circuit functions of the CA3068 and its use in color and b/w TV receivers.
RCA ICAN-6303 (17pp)

3 **"An AGC Building Block"**
(MONOCHIP)
Describes four AGC circuits using a semi-custom chip. Includes graphs of characteristics and schematics.
Interdesign APN-17 (6pp)

4 **"Application of the CA3126Q Chroma-Processing IC Using Sample-and-Hold Circuit Techniques"**
(CA3126Q)
Detailed circuit description of the device, which requires only one adjustment; a trimmer capacitor to tune the crystal filter. Discusses performance data, the phase detector, sample and hold circuits, the VCO loop, first chroma amplifier and ACC servo loop, and the second chroma amplifier.
RCA ICAN-6247 (8pp)

5 **"Application of the CA3143 and CA3144 TV Luminance Processors"**
(CA3143, CA3144)
Describes application information for both the CA3143 and CA3144 luminance processors.
RCA ICAN-6718 (4pp)

6 **"Application of the MC1374 TV Modulator"**
(MC1374)
The MC1374 was designed for use in applications where separate audio and composite video signals are available, and which need converting to a high-quality VHF television signal. Examples include an output device for subscription TV decoders, video disk and video tape players.
Motorola Semiconductor AN-829 (12pp)

7 **"Applications of the CA3134G Sound IF and Output Subsystem in Television Receivers"**
(CA3134)
Describes device and its application in TV sound systems.
RCA ICAN-6728

8 **"CA3210 Horizontal, Vertical and Regulator Control IC"**
(CA3210)
This note describes the use of the CA3210 deflection IC in generating horizontal and vertical drive signals, generating a control signal for a receiver's voltage regulator, regulating an IC supply, controlling IC and receiver start-up, correcting for VCR skew error, and preamplifying a vertical scan signal.
RCA ICAN-7164 (5pp)

9 **"DIDON Demodulator General Operating Principles"**
(TEA2585, TEA2586)
Explains the use of a two-chip DIDON demodulator for the transmission of filtered digital data over television broadcast channels. Topics include the extraction of digital data, data clock regeneration, and validation signal generation.
Thomson CSF Components NA-021A (22pp)

Consumer, TV (cont)

10 **"Description and Application of the RCA CA3120E and CA3142E Integrated-Circuit TV-Signal Processors"**
(CA3120E, CA3142E)
Gives circuit description and application instructions for two ICs that process video signals in monochrome or color TV receivers and supply noninverted and video outputs, dual-polarity composite synchronization signals and AGC signals.
RCA ICAN-6302 (9pp)

11 **"Description and Use of the Vertical Deflection IC TEA 2015A"**
(TEA 2015A)
Explains the operation of the TEA 2015A vertical deflection IC and describes its application in small-screen black and white sets.
Thomson CSF Components NA-013A (15pp)

12 **"EF9365, EF9367 External Synchronization"**
(EF9365, EF9367)
Describes a complete 625-line synchronization system for the EF9365/7 processors. Covers incrustation on a standard TV equipped with a SCART connector.
Thomson CSF Components NA-016R1A (9pp)

13 **"Integrated NTSC Chrominance/Luminance Processor"**
(CA3217)
Beginning with a brief historical review of the improvements in color television receivers, this note then gives a detailed description of the operation of the CA3217 chrominance/luminance processor IC.
RCA ICAN-7175 (11pp)

14 **"Monomax—Application of the MC13001 Monochrome Television Integrated Circuit"**
(MC13001)
Describes the design and construction of a complete 12-inch black and white line-operated television receiver. Includes schematics and artwork for the p-c board layout.
Motorola AN-879 (12pp)

15 **"Programmable TV Timer/Time-Channel Display"**
(MM53107, MM53100, MM5840)
Describes an on-screen TV real time and channel display based on the devices. Includes schematics and PC board layout.
National Semiconductor AN-196 (10pp)

16 **"TEA 2020, A Vertical Deflection IC for 110° Large-Screen Colour TV Sets"**
(TEA2020)
Gives specs, block and schematic diagrams, and typical applications of the TEA 2020 vertical deflection IC.
Thomson CSF Components NA-012A (36pp)

17 **"TEA2017 Horizontal and Vertical Scanning Integrated Circuit for Black-White TV and Display Applications"**
(TEA2017)
Describes the operations of the TEA2017 IC, which provides synchronization and horizontal and vertical scanning with minimum external component requirements.
Thomson CSF Components NA-037A (17pp)

18 **"TV Tuner/Channel Display"**
(AY8130)
Describes a phase-locked loop TV tuning controller IC that interfaces through a prescaler divider to a TV's varactor section. A keyboard interface is provided for channel selection and volume control, along with nonvolatile memory to store channels and volume levels.
General Instrument AB-201 (2pp)

LINEAR

Consumer, TV (cont)

1 **"Television Video IF Amplifier Using Integrated Circuits"**
(MC1350, MC1352, MC1353, MC1330)
Considers the requirements of the video IF amplifier section of a television receiver, and gives working circuit schematics using integrated circuits that have been specifically designed for consumer-oriented products.
Motorola Semiconductor AN-545A (12pp)

3 **"The LM 1823: A High Quality TV Video I.F. Amplifier and Synchronous Detector for Cable Receivers"**
(LM1823)
Describes a video I.F. amplifier/detector combination that can provide high-quality baseband video signals inside the decoder box. Includes schematic of external components and pc-board layout.
National Semiconductor AN-391 (16pp)

4 **"Video Game FM Sound Generator"**
Describes a system that enables a TV sound system to be used for game sounds as well.
General Instrument Bulletin 0405 (2pp)

Current Sources

5 **"Monolithic Current Mirrors"**
(TL011, TL012, TL014, TL021)
Describes the advantages inherent in a monolithic approach to matching transistors in implementing the Wilson current mirror circuit. Applications include a voltage-to-current converter, current buffer, constant-current sink, and lower-power light detector.
Texas Instruments CL-576 (10pp)

Displays

6 **"25 by 80 Character Display Unit Using the EF9340 and EF9341"**
(EF9340, EF9341)
Gives a design example of a 25 line by 80 character display unit using the EF9340/1 ICs and two standard 1K by 8 static RAMs.
Thomson CSF Components NA-022A (21pp)

7 **"Basic Routines for EF9365 and EF9366 Graphic Display Processors"**
(EF9365, EF9366)
Presents a selection of Assembly Language programs for the EF9365/6 processors, including programs for generating extended character sets, circles, rings, disks, and convex quadrilaterals.
Thomson CSF Components NA-028A (39pp)

8 **"EF9367 Graphic Display Processor Application Principles"**
(EF9367)
Discusses design considerations and principal applications of the EF9367 display processor in 512x640, 512x768, and 512x1024 resolution devices.
Thomson CSF Components NA-036A (28pp)

Displays (cont)

9 **"Semi-Graphic Display Unit Using EF9340 and EF9341"**
(EF9340, EF9341)

10 **"Use of the Extended Character Generator with the EF9340 and EF9341 Display Circuits"**
(EF9340, EF9341)
Explains how to extend the character set provided by the EF9340/1 ICs beyond 128 alphanumeric and 128 semi-graphic characters. A sample hardware implementation and programming are included.
Thomson CSF Components NA-029A (19pp)

11 **"Using the EF9364 Clock Inhibition Signal"**
(EF9364)
Describes the use of the clock inhibition signal on the EF9364 display circuit to inhibit dot clock for retrace blanking.
Thomson CSF Components NA-002A (7pp)

Followers

"Monolithic Operational Amplifiers—The Universal Linear Component"
See (Linear) Amplifiers, Operational (National)

General

12 **"A Cookbook Approach to High Speed Data Acquisition and Microprocessor Interfacing"**
Shows how to design a complex data-acquisition system as a series of building blocks using a mixture of LSI, MSI, SSI and discrete devices.
Intersil Application Bulletin A020 (20pp)

13 **"A Guide to Hybrid Circuit Design"**
Discusses techniques that aid the hybrid designer in the design and development of thin and thick film hybrid MICRO CIRCUITS. Emphasis is placed on assembly techniques and procedures with general design rules that help to avoid common design problems.
Precision Monolithics AN-33 (4pp)

14 **"Analog Data Manual"**
Covers linear IC processing and design, data sheets and characteristics of operational amplifiers, video amplifiers, power controllers, timers, comparators, memory interfaces, transistor arrays, display drivers, D/A-A/D converters, PLL, microprocessor interface, and radio, audio and TV circuits. 1981.
Signetics $7.00 (448pp)

15 **"Applications Data Book"**
Contains Application Notes 1-17 individually described elsewhere.
Exar (80pp)

16 **"Bipolar Semi-Custom ICs in Non Entertainment Consumer Applications"**
(Monochips)
Discusses a semicustom approach to designing linear bipolar ICs in consumer, medical, telecommunications, military, industrial and automotive products.
Interdesign APN-24 (12pp)

LINEAR

General (cont)

1 **"Bridge Circuit Drives"**
(PA12)
Discusses use of bridge circuit drivers, including their disadvantages and desired features.
Apex Microtechnology Corp. AN-3 (2pp)

2 **"Bucket-Brigade Devices"**
Discusses bucket-brigade devices and their application in real-time and erasable delays, tapped delays, programmable tapped delays, and in correlators and transversal filters.
EG&G Reticon AN-107 (18pp)

3 **"Building Blocks for the Linear I.C. Designer"**
Presents approximate models for various basic circuit elements. Emphasizes key parameters of circuit and neglects complications.
Analog Devices (29pp)

"CMOS Linear Applications"
See listing under (Digital) CMOS (National)

4 **"Computer Analysis of Linear Semicustom IC's"**
(MONOCHIP)
Describes a computer aided design program jointly developed by Interdesign and UCC. Illustrates the use of this program by analyzing a high performance integrated phase-locked loop.
Interdesign APN-12 (6pp)

"Constant Current LED"
See listing under (Linear) Regulators (National)

5 **"Criteria for Choosing Resins and Evaluation Tests for Discrete and Integrated Power Devices in Plastic Packages"**
Describes the criteria and experimental procedures used in the choosing of moulding resin for plastic packaged devices.
SGS-ATES Technical Note 132 (15pp)

"Custom IC Design Using I²L Technology"
See (Digital) I²L (Exar)

6 **"Design Aid to Build a Smoke Detector with the SM110 IC"**
(SM110)
The SM110 functions applicable to building a smoke detector are discussed: a MOSFET input smoke sensing comparator, low-battery reference voltage, low-battery detector, internal timing, and output driver. A smoke detector schematic is given, along with application and construction aids.
Siliconix DA78-4 (6pp)

7 **"Electronic Combination Lock"**
(PLS157)
Describes the construction of an electronic combination lock with user-settable security code implemented using the PLS157.
Signetics AN-17 (3pp)

8 **"Failure Avoidance"**
Discusses circuit techniques to reduce power component failure during the design-board phase of development. Some of the techniques also apply on a production basis.
Apex Microtechnology Corp. AN-4 (2pp)

9 **"Function Circuits, Design and Applications"**
Covers design theory and applications for such analog functions as multipliers, dividers, logarithmic amplifiers, exponentiators, RMS converters, and active filters. Includes notes on specifying and testing these functions.
Burr-Brown $29.50 (300pp)

General (cont)

10 **"IC Crystal Oscillators"**
(MONOCHIP)
Covers crystal oscillator basics and interfacing them with device.
Interdesign APN-4 (3pp)

11 **"Integrated High Speed Operational Amplifier"**
(MONOCHIP)
Explains how modern high speed, high stability circuits can be constructed using semicustom IC technology. A representative op amp with a bandwidth of 40 MHz and an open loop gain of 10,000 is presented.
Interdesign APN-7 (7pp)

12 **"Interface Databook"**
Primarily data sheets, but includes the following application notes individually described elsewhere: AN-22, 84, 108, 198, 199.
National $6

13 **"Linear Applications Handbook"**
Published 1980, includes National application notes (AN) 2-4, 13, 20, 21, 23, 24, 29-32, 41, 42, 46, 48, 56, 64, 69-72, 74, 75, 79, 81, 82, 87, 88, 97, 103, 104, 110, 115, 116, 125, 127, 129, 132, 146, 147, 151, 153, 154, 156, 159, 161, 173, 178, 179, 181, 182, 184, 192, 193, 210, 211, 222, 225, 233, 234, 238, 240, 241, 242 and Linear Briefs (LB) 1-29, 32-39, 40-50 individually described elsewhere.
National $16 (623pp)

14 **"Nonlinear Circuits Handbook"**
Covers principles, circuits, performance, specifications, testing and applications for multipliers, dividers, squares, log circuits, multi-function and rms-to-dc converters.
Analog Devices $5.95 (535pp)

15 **"Optoelectronics Handbook"**
Covers discrete LED lamps, LED numeric displays, multidigit numeric displays, bar graphs, and interface devices. Both product descriptions and applications included.
National $6 (160pp)

16 **"Polarity Programmable Peak Detector"**
Details a circuit that gives positive or negative peak detection and reset levels over a ± 10 V range.
Precision Monolithics AN-27 (2pp)

17 **"Rectifier Circuits for Linear IC's"**
(MONOCHIP)
Discusses techniques for designing rectifiers using the components available on semicustom IC's. Design precautions are examined in detail and illustrative diode, peak detector, and averaging rectifier circuits are presented.
Interdesign APN-6 (7pp)

18 **"Simplified Design of Astable RC Oscillators Using the CD4060B or Two CMOS Inverters"**
(CD4060B)
Stresses practical aspects of design and provides easy-to-use algebraic equations that permit values of R and C for a given oscillator frequency to be quickly determined.
RCA ICAN-6883 (2pp)

19 **"Single MOSFET Crystal Oscillator Design for Integrated Circuits"**
Presents a procedure for designing a single MOS transistor crystal oscillator requiring only one external pin for the crystal. The technique is incorporated into an HP-67 and HP-41C calculator program. Code listings and a bar code of the program are provided.
Interdesign APN-29 (17pp)

LINEAR

General (cont)

1 **"Solid-State Devices Manual"**
Provides tutorial information on discrete devices and ICs, with emphasis on consumer, hobbyist and experimenter applications.
RCA SC-16 $5.00 (750pp)

2 **"Summary of Electrical Characteristics of Some Well Known Digital Interface Standards"**
Summarizes the important electrical characteristics of the most commonly accepted interface standards (IEEE488, RS357, RS366, etc.) and offers recommendations on how to use the companies' products to meet those standards.
National AN-216 (15pp)

3 **"Thermal Resistance—A Reliability Consideration"**
Covers the relationship between junction temperature and reliability. Describes a thermal model for plastic dual-in-line packages.
Sprague TP80-2 (9pp)

Industrial Control

4 **"A Modern Infrared Remote Control System"**
(U143M, U327M, U328M, U3034M, U3036M, U3037M, U3038M, U3043M, U250B, U427B, U3870, U4013, U4051, U4052)
Outlines the requirements for a modern IR remote control system and explains how the TFK system solves associated problems. Sample applications include the use of a single transmitter to control eight different appliances.
AEG-Telefunken SI 4.81 (21pp)

5 **"A ROM-Digital Approach to PWM-Type Speed Control of AC Motors"**
Describes a pulse width modulation scheme to control motor speed. Shows a CMOS-ROM system to provide variable frequency drive for 1, 2, or 3 phase motors.
Motorola AN-733 (12pp)

6 **"A Variable Frequency Control for 3 ∅ Induction Motors"**
Describes a variable frequency, variable voltage drive system for 3-phase inducton motor controls.
Motorola AN-766 (10pp)

7 **"An Electronic Lamp Monitor"**
(ULN-2435A)
Discusses requirements of lamp monitoring systems and describes a new monolithic circuit to monitor all exterior lamps of an automobile.
Sprague TP81-7 (5pp)

8 **"Applications of the CNY70 and K170P Reflective Optocouplers"**
(CNY70, K170P)
The basic operation of reflective optocouplers is explained, and application considerations such as the influence of temperature, ambient light, and distance from the reflecting surface are discussed. Sample applications include the detection of position, motion, and direction.
AEG-Telefunken SI 7.81 (14pp)

Industrial Control (cont)

9 **"Electronic Controller with an Equilibrium Sustaining Mode"**
(3500 Series)
Discusses a controller formed with two operational amplifiers in a pulse width modulation circuit with feedback. The feedback operates from a heater through the medium being heated to sense amplifiers.
Burr-Brown AN-63 (2pp)

10 **"Infrared Remote Control with TI Products"**
(SN76832, SN76881, SN76882, SN76891)
Describes the design of transmitter and receiver systems capable of implementing highly reliable unobstructed remote control functions for ranges up to 50 feet.
Texas Instruments AR-SGDA001 (12pp)

11 **"Pulsed IR Light Barrier"**
(TDA4180P, U113B)
Describes electro-optical proximity-sensing system using a pulsed infrared light barrier. Provides circuit diagrams for receiver and transmitter, and includes curves for selecting external circuit RC values.
AEG-Telefunken Halbleiter Informationsdienst 1/77 (5pp)

12 **"Real Remote Control"**
(S2742, S2743)
Describes a remote control system using the S2742/2743 with IR transmission. Demonstrates a simple, effective alignment technique.
American Microsystems

13 **"Simplifying High-Efficiency Motor Drive Systems with a New Family of PWM Integrated Circuits"**
(SG1731, SG2731, SG3731)
Describes a pulse width modulator circuit specifically designed for dc motor control.
Silicon General (6pp)

14 **"TC900 and TC910 Integrated Motor Speed Regulators"**
(TCA900, TCA910)
Introduces speed regulator basic and describes device performance. Portable and car mounted applications are depicted.
SGS-ATES Technical Note 113 (10pp)

15 **"Temperature Measurement Method Based on Matched Transistor Pair Requires No Reference"**
(MAT-01, OP-10)
Discusses properties of matched transistor pairs, then describes temperature measuring systems built with a matched pair, constant current sources, and a differential amplifier (OP-10).
Precision Monolithics AN-12 (8pp)

16 **"Variable Speed Control System for Induction Motors"**
(MC673, MC688)
Describes control scheme implemented with discrete components and IC logic coupled by an LED and a photo transistor. Gives example of a circuit used to drive a Class F, 60 Hz, permanent-split, capacitor induction motor with a 13 oz. in. load rating.
Motorola AN-575A (5pp)

17 **"µA7392 Motor Speed Controller"**
(uA7392)
Describes device operating principles and performance. Includes schematics, design considerations, and applications in a tape recorder, an optical tach, and for bidirectional motor control.
Fairchild AN-343 (20pp)

LINEAR

Instrumentation

1 **"A Complete Function Generator System Using the XR2206"**
(XR2206)
A self contained function generator system is described, using the device. Complete circuit connection diagram, parts list and assembly instructions are given for a DC to 100 kHz self-contained function generator system with AM/FM capability and triangle, sine and square wave output.
Exar AN-14 (4pp)

2 **"A Digital Multimeter Using the ADD3501"**
(ADD3501)
Describes a 3½ digit multimeter capable of measuring ac and dc voltages, currents and resistance with the device. Includes circuit diagram.
National AN-202 (4pp)

3 **"A Universal Sinewave Converter Using the XR2208 and XR2211"**
(XR2208, XR2211)
A circuit technique is described which can convert any periodic waveform into a low-distortion sinewave. The circuit operation is completely independent of input waveform amplitude and frequency as long as the input signal is periodic and can operate over a frequency range of 1 Hz to 100 kHz.
Exar AN-11 (4pp)

4 **"Building a Battery Operated Auto Ranging DVM with the ICL7106"**
(ICL7106)
Describes a technique for autoranging a battery-operated DVM suitable for panel-meter applications. Includes circuit ideas for measuring conductance, resistance and current, and for 9V and 5V supply operations.
Intersil Application Bulletin A046 (4pp)

5 **"Design Aid of the LD110/LD111 3½-Digit DVM Demonstrator Board"**
(LD110, LD111)
Gives schematics, parts list, and art work for a 3½-digit DVM demonstrator board using the LD110/LD111.
Siliconix DA74-1 (4pp)

6 **"Dual Polarity 3½ Digit DVM Realized with Simple CMOS Interface"**
(ADC3711, LF11300)
Describes an auto-zero, auto-polarity 3½-digit DVM using the LF11300 and the MM74C928 (ADC3711).
National AN-165 (2pp)

7 **"Everything You Always Wanted to Know About the 8038"**
(ICL8038)
Presents answers to the most frequently asked questions about the 8038 function generator and its applications.
Intersil A013 (4pp)

8 **"Implementation of a Scanning Spectrum Analyzer Using the 2920 Signal Processor"**
(2920)
Reviews sampling theory and describes operation of a signal-processing chip used in spectrum analysis for speech processing, industrial control, medical electronics, signal detection and analog signal processing. Includes assembly code listings for processing functions.
Intel AP-29 (23pp)

Instrumentation (cont)

9 **"Instrumentation Amplifiers—They're Great Problem Solvers When Correctly Applied"**
(MN2200)
Covers basic operation and application considerations for instrumentation amplifiers.
Micro Networks AN202 (4pp)

10 **"LD120/LD121 4½ Digit DVM"**
(LD120, LD121)
Details construction of a DVM using these devices.
Siliconix DA77-2 (4pp)

11 **"LM2907, LM2917 Tachometer/Speed Switch Building Block Applications"**
(LM2907, LM2917)
Covers basic circuit and use. Applications illustrated include: speed switch, analog display drive, automotive tachometer, motor speed controls, skid sensor, A/D converter, frequency doubler.
National Linear Applications Handbook AN-162 (16pp)

12 **"Low Cost Digital Panel Meter Designs"**
(ICL7106, ICL7107)
Supplies complete assembly instructions for Intersil's LCD and LED evaluation kits as well as descriptions of individual components.
Intersil A023 (6pp)

13 **"RMS Converters and Their Applications"**
(LH0091)
Covers RMS converter basics and specifications. Sketches applications including spectrum analysis, harmonic distortion, noise, vibration analysis, and DVM uses.
National Special Functions Databook AN-180 (4pp)

14 **"Solid State Altimeter for Transponder Applications"**
(LX3702)
Describes a solid state altimeter using a pressure transducer. The unit provides an altitude transmission code for use with transponders, plus digital readout.
National AN-109 (8pp)

"The Integrating A/D Converter"
See (Interface) Converters (Intersil)

15 **"Thermometer for Albacore Fishing"**
(MONOCHIP)
Discusses characteristics of a thermometer used for albacore fishing built on a semi-custom chip. Includes schematic and block diagram.
Interdesign APN-21 (3pp)

16 **"Waveform Generator"**
(MONOCHIP)
Describes using two of the devices in a wave form generator application that produces sine, triangle, and square wave outputs. Provides schematics and a discussion of performance.
Interdesign APN-8 (10pp)

Modulators

17 **"Application of the CA1524 Series Pulse-Width Modulator ICs"**
(CA1524, CA2524, CA3524)
Reviews pulse-width modulated circuits and gives several applications of the CA1524 series in power supply circuits.
RCA ICAN-6915 (19pp)

LINEAR

Modulators (cont)

1 **"Deadband Control with the SG1524 Regulating Pulse Width Modulator Circuit"**
(SG1524, SG2524, SG3524)
Discusses techniques to control the amount of deadband in push-pull inverter applications.
Silicon General Linear Brief 6 (1pp)

2 **"Designing with the SG1525/1527 Series of Pulsewidth Modulators"**
(SG1525, SG1527)
Discusses application of pulsewidth modulator ICs in a variety of output configurations, including bipolar power transistor, power FET, low-power transformer and single ended.
Silicon General ANSG1525/1527 (7pp)

3 **"Simplifying Converter Design with a New Integrated Regulating Pulse Width Modulator"**
(SG1524, SG2524, SG3524)
Describes various functions within the device and describes such applications as a low current polarity converter, a DC to DC converter, and a +5 to ±15V flyback converter.
Silicon General (7pp)

4 **"The CA1524E Pulse-Width Modulator-Driver for an Electronic Scale"**
(CA1524E)
Details the application of the CA1542E pulse-width modulator IC as the driving source for an electronic scale.
RCA ICAN-7174 (2pp)

5 **"The RCA CA1524E Pulse-Width Modulator-Driver for an Electronic Scale"**
(CA1524E)
Although the CA1524E is most often used in voltage-regulator applications, it can also be employed as the driving source for an electronic scale.
RCA ICAN-7174 (2pp)

Motor Control

6 **"Motor Control"**
(LAS6300, LAS8500)
Gives details on DC motor control, half-bridge motor drivers, and stepper motor drivers.
Lambda Semiconductors Applications Handbook VI (12pp)

7 **"Moving Toward Monolithic Circuits in Small Motors"**
Discusses the application of integrated circuits in low-power motors used in peripherals, fans, and industrial controls. Covers different motor types and packaging considerations.
Sprague TP-82.3 (6pp)

8 **"Use Motor-Drive IC to Solve Tricky Design Problems"**
Describes uses of the SG3635 as a switch-mode motor-speed controller, driver for long communications lines or power transistors, and (in combination with a pH probe) as a 3-mode controller.
Silicon General AN-SG3635 (6pp)

9 **"Using the HV-1000 Induction Motor Energy Saver"**
(HV-1000)
Discusses load anticipation and basis circuit application of HV-1000 also treats measurement of power savings, handling precautions and reliability.
Harris Semiconductor AN-542 (9pp)

Multipliers

10 **"Analog Multiplier"**
(RC4200)
Includes functional description, electrical characteristics and circuit designs for multiplier and divider, square root, squaring and rms-to-dc converter circuits.
Raytheon (23pp)

11 **"Analog Shaping"**
(4301)
Describes the use of the 4301 multifunction circuit which has the transfer function XY/Z. Includes rms to dc conversion, exponentiation, trigonometric functions, vector computation, and use as a log amp.
Burr-Brown AN-70 (5pp)

"Function Circuits, Design and Applications"
See listing under (Linear) General (Burr-Brown)

12 **"Linear-Antilog Voltage Controlled Amplifiers"**
(SSM2000, SSM2020)
Discusses control circuits, voltage controlled amplifiers, and a four quadrant multiplier among other applications.
Solid State Micro Technology for Music (9pp)

13 **"Log/Lin Multiplier"**
(MONOCHIP)
Describes an IC multiplier which achieves low noise and distortion. Covers all phases of development from initial concept and breadboarding to integration in an audio sweep function generator.
Interdesign APN-3 (11pp)

14 **"Multiplier Application Guide"**
(AD530, AD531, AD532, AD533, AD534, AD536)
Explains multiplier basics, upkeep, and use in a variety of applications including instrumentation functions, signal generators and filters, and to augment the performance of other circuits.
Analog Devices (40pp)

15 **"Wideband Amplifier/Multiplier"**
(SG1402)
Operation and applications of the SG1402. Describes use as a single-ended variable gain amplifier, a modulator, and a demodulator.
Silicon General Linear IC Product Guide (4pp)

Phase Locked Loops

"A Medium Cost PLL Varactor Tuning System Utilizing Off-the-Shelf Logic"
See listing under (Linear) Consumer, TV (Motorola)

16 **"A New Generation of Integrated Avionic Synthesizers"**
Discusses several different types of servo phase locked loop systems and describes a synthesizer for avionic equipment.
Motorola AN-553 (9pp)

"A Phase-Locked Loop Tuning System for Television"
See listing under (Linear) Consumer, TV (Motorola)

17 **"A Wide Tracking Range Precision PLL System Using the XR2212 and XR4151"**
(XR2212, XR4151)
A two-chip PLL system is described which offers extremely wide tracking range without harmonic locking.
Exar AN-12 (3pp)

LINEAR

Phase Locked Loops (cont)

1 **"Applications of the COS/MOS CD4059A Programmable Divide-by-N Counter: Digital Frequency Synthesis for FM Tuners and CB Transceivers"**
(CD4059)
Discusses frequency synthesis using the counter for an FM digital tuner and a CB transceiver.
RCA ICAN-6374 (12pp)

2 **"Clock Recovery System"**
(XR2212, XR320)
Describes the design of a PLL system that can be used to recover the clock from a serial data stream using NRZI protocol with excellent stability.
Exar AN-19 (4pp)

3 **"Crystal Switching Methods for MC12060/MC12061 Oscillators"**
(MC12060, MC12061)
Discusses methods of using diodes as rf switches to select crystals for these oscillators. The techniques are useful for electronic selection of one of a group crystals with minimum disturbance to the series resonant frequency of the selected crystal.
Motorola AN-756 (5pp)

4 **"Designing Wide Tracking Phase-Locked Loop Systems"**
(XR2212, XR320, XR084)
Describes the design of a tracking PLL with a tracking range of greater than 100:1, with no harmonic locking problems.
Exar AN-18 (4pp)

5 **"Low-Power Digital Frequency Synthesizers Utilizing COS/MOS ICs"**
(CD4000 Series)
Reviews digital phase-locked loops. Describes their implementation with CMOS for use in FM receiver synthesizers, both heterodyne and prescaling types.
RCA ICAN-6716 (15pp)

6 **"Phase-Locked Loop Design Fundamentals"**
(MC4016, MC4024, MC4044, MC4316, MC4324, MC4344)
Outlines fundamental-design concepts for phase locked loops implemented with ICs. Gives equations using Laplace Transforms needed to evaluate the basic loop performance and briefly describes a design using MC4000 series devices.
Motorola AN-535 (11pp)

7 **"Precision Narrow-Band Tone Detector"**
(XR2213, XR2208)
Describes the use of the XR2213 PLL in conjunction with the XR2208 analog multiplier as a frequency mixer.
Exar AN-21 (4pp)

8 **"Precision PLL System Using the XR2207 and the SR2208"**
(XR2207, XR2208)
Defines phase locked loop parameters and describes this two-chip PLL system. Includes circuit interconnections for both single supply and split-supply operation. Also gives PLL design equations.
Exar AN-06 (6pp)

9 **"SL650 Phase-Locked Loop Applications"**
(SL650, SL651)
Describes the circuit and application of this device that can operate to 0.5 MHz. Applications: Modulators-AM, FM, FSK, PAN, SCAM, tone burst, phase shift, delta, PWM, Waveform Generators-sine, triangle, mark/space ratio, staircase: Demodulators; Modem Systems, and a Digital Voltmeter.
Plessey Semiconductor SL650 Applications (32pp)

Phase Locked Loops (cont)

10 **"Sinusoidal Output from XR-215 Monolithic PLL Circuit"**
(XR215)
Discusses obtaining a sinusoidal output signal which is synchronized to a desired reference or clock output using the device. Provides schematics of device and application.
Exar AN-09 (2pp)

11 **"The RCA COS/MOS Phase-Locked-Loop: A Versatile Building Block for Micro-Power Digital and Analog Applications"**
(CD4046A)
Discusses PLL basics, characteristics of device, and circuit elements. Describes application in FM demodulation, a frequency synthesizer, split-phase synchronization and decoding, and PLL lock detection.
RCA ICAN-6101 (4pp)

12 **"The Solid State Scientific Phase-Locked Loop"**
(SCL4046B, SCL4446B)
Reviews fundamentals and design considerations of phase-locked loops and briefly describes application in FM demodulation, frequency shift keying, PLL lock detection, AM detection, frequency synchronization, signal conditioning and frequency synthesis.
SSS AN-112 (15pp)

13 **"The Technique of Direct Programming by Using a Two-Modulus Prescaler"**
(MC12009, MC12011, MC12013)
Offers a new approach to the construction of a phase-locked-loop divider.
Motorola Semiconductor AN-827 (6pp)

14 **"XR-210/XR-215/XR-S200 Phase Locked Loops"**
(XR210, XR215, XRS200)
Discusses the various parameters and equations used in applying the XR-210, XR-215, and XR-S200 phase locked loops.
Exar AN-22 (12pp)

Photosensitive Devices

15 **"A Precision Light-Sensing Integrated Circuit"**
(ULN-3310Y)

16 **"Applications of Reticon Photodiode Arrays in Electron and X-Ray Detectors"**
(RL Series)
Describes the use of self-scanning photodiode arays for detecting soft X-rays (1 to 10A) and electrons in the 10 to 100 KEV range.
Reticon AN-101 (4pp)

17 **"Understanding Optronics"**
Covers the basic concepts and areas of optoelectronic technology, including light-emitting diodes, photodetectors, photocoupled systems, and lasers. Includes many applications of optoelectronic devices.
Texas Instruments LCB 5472 (225pp) $6.95

Photosensitive Devices (cont)

1 **"Spectral Response of Reticon Linear Photodiode Arrays"**
Gives information on the spectral response and quantum efficiency of the company's linear arrays. Discusses the effects of using different light sources and window materials.
EG&G Reticon AN-121 (15pp)

Power Control

2 **"5 Volt 100 Watt Line Operated Supply with Auxiliary =15V Output"**
(Am6301)
Explains the operation and advantages of the Am6301 in a specific application.
Advanced Micro Devices Analog and Communications Products Data Book (4pp)

3 **"A Conceptually New Quad Power Fault Monitor"**
(SG1548)
Describes a comprehensive fault monitoring system that provides ac line voltage monitoring, real-time clock generation, and programmable switching supply undervoltage lockout protection. Typical applications are provided.
Silicon General AN-SG1548 (8pp)

4 **"A Review of Transients and Their Means of Suppression"**
Discusses different types of transients and provides guidelines for deciding what type and size suppressor to choose for a certain level of protection.
Motorola AN-843 (12pp)

5 **"Applications of the MOC3031 and MOC3041 Zero-Crossing Triac Drivers"**
(MOC3031, MOC3041)
Describes the improved parameters of these devices, and discusses their applications with high-wattage incandescent lamps, matrix switching, microcomputer interfaces, and ac motors.
Motorola AN-916 (8pp)

6 **"Applications of the VN10KM MOS Power FET"**
(VN10KM)
Reviews MOS power technology and characteristics, including load considerations, techniques for interfacing to logic circuits, drive techniques, and example applications.
Siliconix AN79-7 (8pp)

7 **"Controlling Secondary Breakdown in Bipolar Transistors"**
(LT10)
Describes a resistive ballasting technique that allows bipolar single and Darlington power transistors to operate at higher voltages and power densities by controlling secondary breakdown.
National Semiconductor TP-16 (4pp)

"Features and Applications of RCA IC Zero-Voltage Switches"
See listing under (Interface) Switches. (RCA)

8 **"ICs for Phase and Burst Control of SCR of Triac"**
(L120, L121)
Examines 12 ICs which are suitable for SCR and Triac firing. Description includes diagrams, equations, and applications in ON-OFF control and proportional control.
SGS-ATES Technical Note 116 (12pp)

Power Control (cont)

9 **"Motor Speed Applications Using the TDA1085A"**
(TDA1085A)
Discusses control of line-powered resistive and inductive loads using phase control in closed-loop system with tacho-frequency or analog voltage feedback.
Plessey Semiconductor (20pp)

10 **"Phase Control U111B"**
(U111B)
Provides detailed circuit description of bipolar IC forming the heart of a phase controller for varying power to household appliances. Includes example application for controlling universal motor speed.
AEG-Telefunken Halbleiter Informationsdienst 10.78 (16pp.)

11 **"Phase Control of AC Power with the SL440"**
(SL440)
Describes the operation of the SL440 power control circuit, and supply requirements. Applications include use with inductive loads, three phase systems, lighing, heating, motor and power supply control.
Plessey Semiconductor (38pp)

12 **"Power Supply Control Subsystem"**
(AM6300)
Discusses a power supply control subsystem, covering reference source, error amplifier, thermal shutdown, under/overvoltage protection, current limiting, and applications.
Advanced Micro Devices Analog and Communications Products Data Book (8pp)

13 **"Some Applications of a Programmable Power Switch/Amplifier"**
(CA3094)
Brief circuit description of CA3094. Device delivers three watts average power, 10 watts peak power to external load. Applications include Class A power amplifiers and driver amplifiers for complementary transistors, wideband power multivibrators, oscillators, comparators, voltage regulators, analog timers, and motor-speed controllers.
RCA ICAN-6048 (12pp)

14 **"Testing of Feed Forward Control"**
(AM6301)
Describes a simple power supply with switches to control the feed-forward and feedback circuits in order to observe the effects of feed-forward control.
Advanced Micro Devices Analog and Communications Products Data Book (2pp)

15 **"Triac Phase Control Circuits"**
(MONOCHIP)
Illustrates a phase control circuit fabricated on a semi-custom chip. Device provides power supply, 60 Hz zero crossing detector and pulse generator, time delay ramp generator, and triac tigger pulse generator.
Interdesign APN-15 (7pp)

16 **"Two-Point Driver to Temperature Controlling of Inductive Loads with U106BS"**
(U106BS)
Describes use of an integrated zero-crossing switch to control an air-conditioner compressor motor for maintaining a preset temperature.
AEG-Telefunken Halbleiter Informationsdienst 4.77 (4pp)

17 **"Using the VN64GA High Current, High Power MOS Power FET"**
(VN64GA)
Covers geometry and operating characteristics of MOS power FETs; including examples of linear and switching applications.
Siliconix AN79-5 (6pp)

APP. NOTE DIRECTORY

LINEAR

Power Control (cont)

1 **"Zero-Voltage Switch U217B is Two-Step Temperature Controller with Superimposed Proportional Behavior"**
(U217B)
Offers circuit description and diagrams for applying a zero-voltage switch in a proportional temperature controller.
AEG-Telefunken Halbleiter Informationsdienst 12.78 (2pp.)

Power Supplies

2 **"A Dynamically Balanced 5V, 55A Line-Operated Switching Power Supply"**
(LAS3840, LAS8101, LAS723B)
This note describes a 5V, 55A push-pull switching power supply incorporating a simple technique for achieving transformer volt-time balancing.
Lambda Semiconductors AN 2-2 (20pp)

3 **"A Flyback Switch Mode Power Supply Using the UAA4006-DP"**
(UAA4006)
The basic operation of the UAA4006 IC is explained along with considerations involving its application to flyback switching power supplies.
Thomson CSF Components NA-027R1A (14pp)

4 **"A New Feedback System for Isolated Closed Loop Control"**
(UC1901)
Describes use of the UC1901 to solve problems associated with closing a feedback loop across a voltage isolation boundary. Implementation of each of the IC's operational blocks is discussed along with applications in practical power system designs.
Unitrode (8pp)

5 **"A New Integrated Circuit for Current Mode Control"**
(UC1846)
Describes the advantages of current mode control over PWM approaches to switching power converters, and illustrates the use of the UC1846 current mode control IC in several practical examples.
Unitrode (7pp)

6 **"A Second-Generation IC Switch Mode Controller Optimized for High-Frequency Power MOSFET Drive"**
(U1525A, U1527A)
Describes the UC1525A and its complementary output version, the UC1527A—improved switch mode controllers that include more power supply control functions in the chip and provide an optimum interface for driving high-current power devices.
Unitrode U-89 (11pp)

7 **"Adequate Switching Transistor Drive Produces Fast Transistor Switching"**
(LAS8100)
The LAS8100 solves the problem of providing proper base or gate drive for switching transistors and FET output devices, guaranteeing optimum turn-on and turn-off drive.
Lambda Semiconductors AN 3-1 (6pp)

Power Supplies (cont)

8 **"Applying the UC1840 to Provide Total Control for Low-Cost, Primary-Referenced Switching Power Systems"**
(UC1840)
Explains how the UC1840 off-line controller simplifies the interface between the control IC and the power switch, eliminating many of the isolation boundary problems of a secondary referenced system.
Unitrode U-91 (10pp)

9 **"Design Considerations for Power MOSFET Gate Drive Circuitry"**
A designer's guide to the power MOSFET, discussing basic characteristics and its application in switching regulated power supplies.
Unitrode U-88 (16pp)

10 **"Designing an Efficient and Economic "Flyback" Switch Mode Power Supply with TEA 1001 SP and UAA 4001-DP"**
(TEA1001, UAA4001)
The functions of the TEA1001 and UAA4001 ICs are described along with applicable specs, relationships, and schematics for use in flyback switching power supplies.
Thomson CSF Components NA-011A (19pp)

11 **"Detecting Impending Core Saturation in Switched-Mode Power Converters"**
Presents a technique which prevents saturation of the core of a switched-mode power converter.
Unitrode U-81 (8pp)

12 **"Hybrid Circuits for Low Voltage Switched-Mode Converters"**
Describes some sample hybrid circuits for switched-mode converters and their advantages over a discrete approach.
Unitrode U-82 (9pp)

13 **"LAS3840 Eliminates Transformer Unbalance in Double-Ended Switching Converters"**
(LAS3840)
Reviews the significance of transformer balance in double-ended switching converters and demonstrates the use of the LAS 3840 IC in a 15V to 2V push-pull DC-to-DC converter which eliminates imbalance.
Lambda Semiconductors AN 2-1 (12pp)

14 **"Optimum Base Drive and Protection of Switching Transistors Using the UAA4002"**
(UAA4002)
After discussing the key parameters of power transistors requiring monitoring in switching mode, this note gives a functional description of the UAA4002 along with design precautions. Sample applications include an 8A, 400V switch, a 150W forward-type power supply, and a 200A, 700V transistorized switch.
Thomson CSF Components NA-031A (38pp)

15 **"Output Supervisory Circuits: A New Family of Power Supply Control Devices"**
(SG1543)
Describes ICs that monitor and control the outputs of sophisticated power supplies. Functions provided include overvoltage and undervoltage sensing, current sensing and SCR crowbar firing.
Silicon General AN1542, 1543, 1544, 3523 (8pp)

16 **"Power Supply Building blocks"**
(MONOCHIP)
Describes circuit blocks used in power supply circuits. They include: bandgap voltage regulator, bandgap reference, zener reference and amplifier, start-up circuit, differential amplifier stage, and Darlington pass transistor. Includes schematics.
Interdesign APN-18 (5pp)

LINEAR

Power Supplies (cont)

1 **"Power Supply Circuits Head for Simplicity by Integration"**
Describes several integrated circuits designed specifically for simplifying switching power supply control and improving circuit reliability.
Silicon General (10pp)

2 **"Power Supply Design Using the ICL8211 and ICL8212"**
(ICL8211, ICL8212)
Describes use of these devices as positive and negative voltage regulators, constant current sources, high voltage and overvoltage protection circuits, supply window detectors and power failure-shutdown systems.
Intersil A027 (8pp)

3 **"Power Switch Drivers: New IC Interface Building Blocks for Switched-Mode Converters"**
(SG1627, SG1629)
Details the characteristics and performance of the SG1627/9 designed to interface between the control circuitry for switch mode converters and their high power output stages.
Silicon General (8pp)

4 **"Protect Your Switchers with Digital Current Limiting"**
(SG1549)
Describes operation and application of a current sense latch IC in switching power supplies to provide pulse-by-pulse current limiting.
Silicon General ANSG1549 (4pp)

5 **"RC4193/4391 Switching Regulators"**
(RC4193, RC4391)
Presenting design examples for low-power switching regulator control ICs, this note includes a troubleshooting chart listing common prototype breadboarding problems and possible causes and cures.
Raytheon (23pp)

6 **"Simplified Design of a 220V, 100W Flyback Switch Mode Power Supply Using the TEA 1001-SP"**
(TEA1001)
Explains how the design of a 100W converter with fully protected output is simplified by the use of the TEA1001-SP and a BUV46 high-voltage transistor.
Thomson CSF Components NA-014A (9pp)

7 **"Simplified Design of a 220V, 100W Flyback Switch Mode Power Supply Using the UAA4001-DP"**
(UAA4001)
This note details the functions, operations, and relevant parameters of the UAA 4001-DP, a special-purpose IC which directly controls the base of the switching transistor as well as handling regulation and safety functions.
Thomson CSF Components NA-019A (9pp)

8 **"The Integration of Switching Power Supply Circuitry"**
(SG1525/1527, SG1526)
Reviews past approaches for controlling switching power supplies, and describes new ICs with integrated control/driver functions.
Silicon General (9pp)

9 **"The Output Supervisory Circuit: A New Analog LSI Circuit For Power Supply Control"**
(SG1543, SG2543, SG3543)
Describes the SG1543, an IC that monitors and controls the output of a power supply system. Includes diagrams, schematics and typical applications.
Silicon General (7pp)

Power Supplies (cont)

10 **"The UC1524A Integrated PWN Control Circuit Provides New Performance Levels for an Old Standard"**
(UC1524A)
The added features of the UC1524A (higher power capability, higher operating frequencies, PWM latch, undervoltage lockout, better trimming are described.
Unitrode U-90 (12pp)

11 **"UC3842 Provides Low-Cost Current-Mode Control"**
(UC3842)
A functional description of an integrated pulse-width modulator IC, with suggestions on ways to incorporate it into a power supply.
Unitrode U-100 (14pp)

Preamplifiers

"Audio Handbook"
See listing under (Linear) Consumer, Audio (National)

Rectifiers

12 **"Design Guide—Power Schottky Rectifiers in a Switching Regulator"**
Complete details on the use of power Schottky rectifiers in a switching regulator.
Unitrode U-85 (15pp)

Regulators

13 **"A 25 Watt Off-Line Flyback Switching Regulator"**
(UFN833, UC1842)
Describes a low-cost switching power supply for applications requiring multiple output voltages.
Unitrode U-96 (6pp)

14 **"A New Approach to Switching Regulators"**
Describes a 24 volt 3 ampere switching mode supply which operates at 20 kHz from as 120 volt AC line with 70% efficiency. Briefly discusses load-line shaping to reduce power losses and to reduce noise.
Motorola AN-719 (11pp)

15 **"A New, Versatile PWM Control Circuit for Switching Power Supplies"**
(SG1524B)
Analyzes the performance characteristics of a control circuit for switchmode power supplies. Discusses reference accuracy, low supply voltage protection, elimination of output switching transients, and output voltage and current capabilities.
Silicon General AN-SG1524B (8pp)

16 **"A Unique Converter Configuration Provides Step-Up/Down Functions"**
(MC34063)
The high power-conversion efficiency of switching regulators is making them increasingly popular for power packs in lightweight, portable equipment designs. This note demonstrates how, using a simple inductor, the Motorola MC34063 switching regulator subsystem provides complete step-up/down functions in a minimum component system.
Motorola AN954 (4pp)

LINEAR

Regulators (cont)

“Applications of the CA3085 Series Monolithic IC Voltage Regulators”
(CA3085)
Circuit description of positive regulators with output currents up to 100 milliamperes from − 55°C to + 125°C. Applications include high-current and constant-current regulators; switching, dual-tracking and high-voltage regulators. Use as a general purpose amplifier, and various methods of current limiting are mentioned.
RCA ICAN-6157 (11pp)

2 **“Designing Around the L200 Variable Voltage/Current Regulator IC”**
(L200)
Discusses circuit designs for variable voltage and current regulators, motor-speed control, remote voltage control and battery chargers.
SGS-ATES DN318 (7pp)

3 **“Designing Switching Voltage Regulators with TL497A”**
(TL497A)
Shows how the TL947A simplifies circuit design for step-up and step-down switching voltage regulators, inverting regulators, and combination devices.
Texas Instruments SLVA001 (26pp)

4 **“Flyback and Boost Switching Regulator Design Guide”**
Describes and characterizes flyback and boost switching regulators.
Unitrode U-76 (9pp)

5 **“Hybrid Voltage Regulators”**
(LAS2105, LAS7205, LAS1505, LAS1805)
Gives hybrid voltage regulator basics, specifications on parts, and design examples.
Lambda Semiconductors Applications Handbook VIII (14pp)

6 **“L200 1A/15V Switch Mode Regulator”**
(L200)
Provides circuit-design equations and discusses application constraints for using a programmable voltage and current regulator as a switching power-supply regulator.
SGS-ATES DN319 (8pp)

7 **“LAS6300 DC Motor Switching Control Applications”**
(LAS6300)
Three types of 6300-based switching dc motor control circuits are covered: constant voltage, constant speed, and constant torque. Design steps and examples are included.
Lambda Semiconductors AN 1-4 (7pp)

8 **“LAS6300 Inverting and Step-Up Applications”**
(LAS6300)
This note describes the use of the LAS6300 in a noninverting step-up converter, an inverting step-up converter, and a Cuk converter, which provides both inverted step-up and step-down operation.
Lambda Semiconductors AN 1-3 (8pp)

9 **“LAS6300 Series Applications Information”**
(LAS6300)
Gives design equations for the LAS6300 monolithic switching regulator control circuit applied to single-output and multiple-output 5V, 5A dc-to-dc converters.
Lambda Semiconductors AN 1 (21pp)

10 **“LH1605 Switching Regulator”**
(LH1605)
Details operating theory and analyzes power considerations of the LH1605, a high-efficiency switching regulator designed to minimize power losses. Also describes dc-dc conversion using the LH1605, and suggests other applications.
National Semiconductor AN-343 (10pp)

Regulators (cont)

11 **“Linear Voltage Regulators”**
(Monochip)
A reference book on linear voltage regulators for the semicustom IC designer.
Interdesign APN-27 (16pp)

12 **“Linear Voltage Regulators”**
(LAS3905, LAS1912, LAS1905)
Compares linear voltage regulators from several manufacturers and describes typical application schematics.
Lambda Semiconductors Applications Handbook VII (18pp)

13 **“MOE 6047 Building Block”**
(MONOCHIP)
Discusses circuit with a bandgap regulator and matched current sources for use in D/A converters or as precision current sources. Provides schematics and test data.
Interdesign APN-19 (5pp)

14 **“On the Stability of 1.2V References”**
(AD589, ICL8069, LM113, LM313)
Although 1.2V IC reference diodes using the bandgap principle may offer excellent drift characteristics with extremely low power consumption, they tend to oscillate with certain combinations of reverse current and shunt capacitance.
Analog Devices (1p)

15 **“Protect your Switchers with Digital Current Limiting: A New Current Sense Latch IC Provides Pulse-by-Pulse Control”**
(SG1524)
Discusses operation of a current sensing latch that operates at power supply switching frequencies for fast turn-off on current overload.
Silicon General SG1524 (4pp)

16 **“Resolving the Problems of Switching Mode Power Supplies with the ZN1066”**
(ZN1066)
Describes switching mode power supplies and problems involved in using, including current limit and switching transistor protection, low voltage cutoff, and impulse starting.
Ferranti (20pp)

17 **“Switching Regulator Design Guide”**
An in-depth tutorial on the switching regulator.
Unitrode U-68A (22pp)

18 **“Theory and Applications of the MC34063 and μA78S40 Switching Regulator Control Circuits”**
(MC34063, uA78S40)
Describes in detail the principle of operation of the MC34063 and μA78S40 switching regulator subsystems. Several converter design examples and numerous application circuits with test data are included.
Motorola AN-920 (36pp)

19 **“Using a Dual-Polarity, Tracking Voltage Regulator”**
(SG1501, SG2501, SG3501)
Describes the circuit and use of the SG1501 series of dual regulators.
Silicon General Applications Bulletin 1 (6pp)

20 **“Versatile UC1834 Optimizes Linear Regulator Efficiency”**
(UC1834)
Describes a programmable linear regulator control IC which, with an external pass transistor, forms a complete power supply.
Unitrode U-95 (23pp)

Regulators (cont)

1 **"Voltage Regulator Handbook"**
(LM109, LM117, LM120, LM123, LM125, LM129, LM136, LM137, LM150, LM199, LM320, LM340, LM341, LM7800, LM78L00)
Covers product selection; heat flow and thermal resistance; commercial and custom heat sinks; applications of positive, negative and dual regulators; power supply design and includes data sheets for the product families listed above.
National Voltage Regulator Handbook, $7.00 (139pp)

2 **"μA78S40 Switching Voltage Regulator"**
(uA78S40)
Provides information on the operating principles of a switching voltage regulator and a functional description of the μA78S40.
Fairchild 370 (12pp)

Speech

3 **"Time-Domain Synthesis Gives Good-Quality Speech at Very Low Data Rates"**
(DIGITALKER II)
Discusses time-domain synthesis techniques for producing medium-to high-quality synthetic speech at very low data rates. The low cost of the time-domain synthesis approach results from data compression techniques that yield highly intelligible speech with less than 128 kbits of RAM.
National Semiconductor AN-341 (8pp)

TV

4 **"Application of the MC1377 Color Encoder"**
(MC1377)
Describes the operation and circuit choice foundations for the NTSC or PAL systems' MC1377 RGB signal encoder. Includes an application with the MC1374 FHV modulator.
Motorola Semiconductor AN-932 (12pp)

Telecommunications

5 **"3044-3045 DTMF Group Filters"**
(ITT3044, ITT3045)
Explains dual-tone multifrequency signaling and the demands on a DTMF receiver.
Aptek Microsystems (2pp)

6 **"High-Frequency TTL-Compatible Output from the XR-215 "**
Explains how the XR-215 monolithic PLL circuit and an additional buffer circuit can be used to interface analog signals to digital systems.
Exar AN-27 (3pp)

7 **"MC14412/MC145440 Chip Set Sets New Standard in 300 Baud Modem Designs"**
(MC14412, MC145440)
Describes a modem chip set that offers a significant reduction in the cost and complexity of 300 baud modem designs.
Motorola AN-891 (10pp)

Telecommunications (cont)

8 **"R24LL and R24DC Modem Control Signal to LED Interface"**
(R24LL, R24DC)
Explains how a single hex buffer and coupled LEDs can be used to monitor the control signal outputs of two modem modules.
Rockwell AN-634 (2pp)

9 **"Understanding 300 Baud Modem Specifications"**
A concise guide to modem specifications and terminology, with warnings of common pitfalls.
National Semiconductor AN-392 (11pp)

Thermal Considerations

10 **"A Simple Thermal Analysis Program for Integrated Circuits"**
(MONOCHIP)
Presents a thermal analysis program for determining the temperature at any point on an IC.
Interdesign APN-16 (7pp)

11 **"Transient Thermal Resistance—General Data and Its Use"**
Discusses transient thermal resistance and its use and describes methods using various degrees of approximations to determine the junction temperature rise of a device. Also covers the concept of a duty cycle family of curves to simplify calculation of junction temperature rise under a repetitive pulse train.
Motorola AN-569 (15pp)

Timers

12 **"A 4-Digit, 7-Function Stop Watch/Timer"**
(MM5865)
Gives detailed instructions for the circuit and construction of a 4-digit, 7-function timer with a display resolution of 0.01, 0.1, and 1 second, using the MM5865.
National MOS/LSI Databook AN-169 (14pp)

13 **"MM5865 Universal Timer Applications"**
(MM5865)
Provides block diagram and system description, discusses general timing and programming capabilities, suggests timing and counting applications.
National MOS/LSI Databook AN-168 (10pp)

14 **"Precision Timer"**
(ZN1034E)
Explains the device and its use in various applications including a wiper control, a metronome, and a battery charger.
Ferranti Electric (19pp)

15 **"Single-Chip Frequency Synthesizer Employing the XR2240"**
(XR2240)
Describes use of this timer/counter as a single-chip frequency synthesizer: fo = f, (m/n + 1) Where fo <200 kHz. Describes generating 100 Hz synchronized to 60 Hz line.
Exar AN-07 (3pp)

LINEAR

Timers (cont)

1 **"The LX1602A Pressure Transducer and Altimeter Applications"**
(LX1602A)
Describes how to use this transducer along with additional electronics to build an altimeter that operates over a range of −1,000 feet to +50,000 feet.
National AN-91 (3pp)

2 **"Using National Clock Integrated Circuits in Timer Applications"**
(MM5309, MM5311, MM5312, MM5315)
Describes demultiplexing techniques to generate time intervals and low frequency square waves. Gives as an example a failsafe lighting timer.
National MOS/LSI Databook AN-143 (4pp)

3 **"Using the MC-116"**
(MC-116)
Explains how to shorten sequences and obtain automatic reset for continuous sequencing in the MC-116 10-output monolithic sequencer.
Analog Systems AN-1003 (1pp)

Transducers

4 **"Accuracies of the AD590"**
(AD590)
Tables of maximum errors for device by grade involving limited temperature spans.
Analog Devices (4pp)

5 **"Crystal Oven Controller and Precision Voltage Reference"**
(LM199, LM299, LM399, LM199A, LM299A, LM399A)
Shows the use of the LM199 both as an oven temperature controller and a voltage reference at the same time.
National Linear Applications Handbook LB-31 (2pp)

6 **"Installation Ideas for Pressure Transducers"**
(LX1600, LX1700, LX1400, LX1701)
Provides suggestions for mounting National transducers for various applications. Includes diagrams and typical mounting configurations.
National AN-92 (4pp)

7 **"LX Series Pressure Transducers: Design and Applications Information"**
(LX1600A, LX1601A, LX1602A)
Describes hybrid transducer circuit and applications, including pressure to frequency converter, latching altitude detector, digital readout barometer and altimeter.
National AN-94 (8pp)

8 **"Pressure Transducer Handbook"**
Supplies product descriptions and talks about related topics including installation, fluid flow, auto-referencing and signal conditioning. Covers applications in the acoustic, medical, and automotive areas.
National Semiconductor $3 (130pp)

9 **"Pressure Transducer Load Cell"**
(LX1700G)
Describes use of LX1700G pressure transducer to measure weight.
National AN-95 (4pp)

Transducers (cont)

10 **"Pressure Transducers as Accelerometers"**
(LX1700G)
Discusses uses of accelerometers and describes scheme of converting LX series pressure transducers to cover ranges from fractions to thousands of g's.
National AN-96 (4pp)

11 **"REF-02 Temperature Controller"**
(CMP-02, REF-02)
Describes temperature control using the REF-02 and the CMP-02 comparator.
Precision Monolithics AB-4 (1pp)

12 **"Temperature Compensation Methods for the Motorola X-ducer Pressure Sensor Element"**
Presents techniques for temperaure compensation of both span and offset voltage for the X-ducer piezoresistive pressure sensor. The techniques use relatively simple passive elements to generate temperature-dependent voltages that act counter to the temperature characteristics of the transducer.
Motorola Semiconductor AN-840 (20pp)

13 **"Temperature Compensation, Calibration and Applications of Motorola's X-ducer Pressure Sensor"**
Illustrates temperature compensation methods along with applications of the X-ducer pressure sensor element.
Motorola AN-922 (6pp)

14 **"The Multi-Level Switch Kit, Part No. SK1007"**
Details the use of any LX series pressure transducer to produce a high level analog output as well as three independent switch points.
National TB-1 (2pp)

15 **"Thermometer Application of the REF-02"**
(REF-02)
Discusses thermometer essentials, bandgap voltage reference theory, and basic circuit design using device.
Precision Monolithics AN-18 (4pp)

16 **"Transducer Fluid Filled Option"**
Describes the "Fluid-Filled" methods of protecting transducers from hostile environments. Rates the resistance of silicone rubber to some common fluids.
National TB-8 (2pp)

17 **"Transducer Interfacing Handbook"**
Basic guide to analog signal conditioning required to excite and amplify the output of commonly used input transducers. Describes over 100 applications to the most popular kinds of transducers for sensing temperature, pressure, force, flow and level.
Analog Devices $14.50 (254pp)

18 **"Transducer Sensor Diaphragm 15 Million Cycle Life Test"**
Findings in the continuing test of National's transducer sensing elements—a silicon membrane approx. 1 mil thick.
National TB-3 (1pp)

19 **"Transducers in Fluid Flow Applications"**
(LX1602A)
Discusses application of LX1602A in pressure vessel, open flow and closed flow applications.
National AN-93 (8pp)

20 **"Use of the SK1007 Pressure Transducer Kit in Vault Alarm Systems"**
Describes application of this multi-level switch kit with a pressure transducer in vault alarm systems.
National TB-7 (2pp)

LINEAR

Video

1 **"CDP1800-Based Video Terminal Using the RCA Video Interface System"**
(CDP1869, CDP1870, CDP1876)
The VIS chip set for controlling video terminals, industrial displays, and broadcast-television text overlays is described in detail with a sample implementation for a low-cost 40-character x 24-line VDT.
RCA ICAN-7032 (36pp)

2 **"External Synchronization System on EF9364 Display Circuit"**
(EF9364)
Explains the signals used and the modifications required to superimpose text given by the EF9364 on a 625-line TV image.
Thomson CSF Components NA-010A (3pp)

3 **"Input/Output of Real Time Video Data using the NCR45CT6"**
(NCR45CT6)
Describes how the NCR45CT6 can be used to reformat real-time video data for an array of NCR45CG72 GAPP devices.
NCR Corporation GAPP Application Note 1

4 **"Synchronizing the EF9340 for Incrustation"**
(EF9340, EF9341)
This note introduces a system that allows the EF9340 to be synchronized with an external video signal for incrusting a character string into a video image.
Thomson CSF Components NA-020R1A (10pp)

Video (cont)

5 **"TMP Row and Attribute Table Lookup Operation"**
Gives a detailed description of the operation of the TMP Attributes Demo Program. The program demonstrates row table lookup operation in the TMP while at the same time putting out a visual display of the various video attributes available in the chip.
National Semiconductor AN-354 (8pp)

Voltage References

6 **"A Micropower Voltage Reference"**
Describes a voltage reference made by operating a JFET slightly below pinch-off along with an op amp to convert current to voltage.
National Linear Applications Handbook LB-34 (2pp)

"Analog Products: Features and Applications"
(See listing under (Linear) Amplifiers, Operational (PrecisionMonolithics Inc.)

"Crystal Oven Controller and Precision Voltage Reference"
See listing under (Linear) Transducers (National)

7 **"Precision Voltage References for the MC10315/MC10317 Flash A-D Converters"**
(MC10315, MC10317)
The MC10315 and MC10317 flash A/D converters have a low reference input resistance, thus requiring a significant current be supplied from a precision source. Most precision monolithic voltage references available cannot supply the required current directly, and therefore a current booster is necessary. Several circuit configurations are described which can be used to supply the reference voltage, and current, at the stability required by the A/D converters.
Motorola Semiconductor AN-877 (10pp)

MEMORY

Analog

1 **"A Programmable Binary-Analog Correlator"**
(BAC-32)
Describes device and its capability to perform various mathematical operations like convolution and correlation. Applications such as filtering, correlation, decoding, and chirp detection are shown.
Reticon AN-106 (14pp)

2 **"A Tapped Analog Delay for Sampled Data Signal Processing"**
Introduces tapped analog delays and gives various applications previously accomplished by digital techniques.
Reticon AN-105 (11pp)

3 **"A Time Base Compressor for Low-Frequency Chirp-Z Transforms"**
(R5601)
Examines time base compression (TBC) of data recorded for analysis. Illustrates implementation of a TBC system using the device and low-cost digital memories. Block and timing diagrams are supplied.
Reticon AN-115 (18pp)

4 **"Acoustic Applications of Serial Analog Delay Devices"**
(SAD1024)
Covers use in reverberation, vibrato, chorus, wow and flutter control plus considerations in using this device.
Reticon AN-104A (8pp)

5 **"Analog Analog Correlator/Convolver"**
Presents an LSI discrete-time processing device capable of performing the convolution or correlation of two analog signals at clock rates up to 5 MHz.
Reticon AN-116 (4pp)

6 **"Charge Transfer Devices for Sampled-Data Processing"**
Discusses the application of charge transfer devices to analog and digital signal processing. Compares CTD devices. Describes Tapped Analog Delay, the Binary Analog Correlator, the Analog Correlator and the Transversal Filter.
Reticon AN-114 (11pp)

7 **"MOS Delay Lines"**
(DM8000, DM8510, DM8830)
Covers use of MOS shift registers to build delay lines.
National MB-4 (2pp)

8 **"Serial Operation of Clocked Analog Delay Lines to Obtain Long Delay"**
(SAD1024A)
Describes advantages, coupling, and performance of device.
Reticon AN-109 (8pp)

Bubble Memories

9 **"8085 to BPK Interface"**
(BPK72)
Provides detailed hardware and software information on how to interface a BPK72 bubble memory with an 8085 microprocessor.
Intel 1985 Memory Components Handbook AP-150 (68pp)

10 **"Powerfail Considerations for Magnetic Bubble Memories"**
(BPK72)
Describes a power-fail circuit incorporated in Intel Bubble Memory Boards that provides improved noise immunity and a four-times reduction in the time required to shut down the bubble system.
Intel 1985 Memory Components Handbook AP-127 (22pp)

Bubble Memories (cont)

11 **"Software Design and Implementation Details for Bubble Memory Systems"**
Examines the programmatic interface to the 7220-1 bubble memory controller and how communications between a host processor and the bubble subsystem govern all bubble system operations.
Intel 1985 Memory Components Handbook AP-157 (36pp)

Character Generators

12 **"128 Characters with the DM8678"**
(DM8678)
Describes the control logic necessary to generate 128 characters and attributes.
National Memory Applications Handbook (9pp)

13 **"7 x 9 Display Character Generator"**
Uses three MOS ROMs and some TTL logic to create a font of 64 7 x 9 dot-type characters. A circuit diagram and suggested character forms are provided.
National MB-13 (2pp)

14 **"DM8678 Bipolar Character Generator"**
(DM8678)
Explains the operation of the device and the various features which include circuit address latches, the line counter, the 7-bit shift register, and the output buffer.
National AN-167 (4pp)

15 **"DM8678 Character Generator Emulator"**
(DM8678)
Describes a field programmable emulator to be used when developing new character fonts or graphic symbol sets for the DM8678.
National Memory Applications Handbook (2pp)

16 **"Digital Display Systems"**
Using TTL compatible MOS ROMs to generate displays. Gives circuit diagrams and a sample readout.
National MB-8 (2pp)

"The Systems Approach to Character Generators"
See listing under (Memory) ROMs. (National)

Controllers

17 **"74LS764/65 Dynamic RAM Dual-Port Controller"**
(74LS674, 74LS765)
Details on the architecture, functions, and applications of a dual-port dynamic RAM controller.
Signetics AN-211 (5pp)

18 **"TMS4416/7220 Graphics"**
(TMS4416, 7220)
Describes a design coupling the NEC 7220 and the TMS4416 in a single plane, bit-mapped graphics system. Provides a detailed example of the necessary memory interface.
Texas Instruments SMBA001 (7pp)

MEMORY

Controllers (cont)

1 **"TMS4500A Clock Synchronization"**
(TMS4500A)
Describes a simple clock synchronization circuit for use in asynchronous systems using the TMS4500A.
Texas Instruments DRC-2

2 **"TMS4500A Dynamic RAM Controller Users Manual"**
(TMS4500A)
Describes the functional operation of the TMS4500A and how it can be used in a microprocessor system.
Texas Instruments SCG690

3 **"The TMS4500A in an Asynchronous Bus System"**
(TMS4500A)
Details the logic required to implement a TMS4500A within an asynchronous bus system.
Texas Instruments DRC-1

E^{2}PROMs

4 **"Fifteen Common EEPROM Questions Answered"**
Fields questions on inadvertent write commands, temperature effects, and other common EEPROM issues.
Xicor AB Vol. 2, No. 17 (4pp)

5 **"Uncompromising Features Highlight the 5V EEPROM"**
(X2804A, X2816A, X2818A)
A brief history and description of 5V EEPROMs, with a discussion of the benefits they offer.
Xicor Data Book 5-95 (7pp)

6 **"Understanding Your Application in Choosing NOVRAM, E2 PROMs"**
An examination of the difference between nonvolatile RAMs and EEPROMs, focusing on making the right choice for particular applications.
Xicor Data Book 5-17 (11pp)

7 **"5V Only EEPROM Mimics Static-RAM Timing"**
(X2816A, X2804A)
An introduction to n-channel MOS technology and EEPROMs.
Xicor Data Book 5-71 (4pp)

8 **"Data Polling and Page Write Combine to Offer Improved WriteTiming Characteristics"**
(X28256)
Presents a simple software technique of testing for the early completion of a nonvolatile write cycle.
Xicor AB Vol. 1, No. 2 (3pp)

9 **"EEPROM Provides the Solution to Field Alterable Software"**
Discusses a hybrid approach to field alterable software using a combination of EEPROMs and ROMs or EPROMs.
Xicor AB Vol. 2, No. 15 (3pp)

10 **"EEPROMs vs Battery Backed-Up CMOS RAM Nonvolatile Memory Systems"**
Compares the technology, reliability, real estate, density, cost, and availability issues of different approaches to nonvolatile memory systems.
Xicor AB Vol. 3, No. 19 (3pp)

E^{2}PROMs (cont)

11 **"Nonvolatile Date Integrity: Inadvertent Write/Store Elimination"**
Discusses the memory protection features of the company's nonvolatile memory ICs.
Xicor AB Vol. 1, No. 1 (4pp)

12 **"Nonvolatile Memories Keep Appliances Out of the Dark"**
(X2444)
Describes the use of the X2444 NOVRAM in a microwave oven.
Xicor Data Book 5-89 (6pp)

13 **"Nonvolatile Memory Gives New Life to Old Designs"**
(X2443)
A broad discussion of the capabilities of nonvolatile memories and the advantages they bring to a design.
Xicor Data Book 5-111 (7pp)

14 **"Replacing DIP Switches with Nonvolatile Technology"**
(X2444)
Describes a method for replacing DIP switches with NonvolatileRAM. Includes 6801 code for making the transition.
Xicor AB Vol. 1, No. 7 (4pp)

15 **"Save Volatile Data During Power Loss"**
Presents a design that transfers data securely between volatile and nonvolatile memory during a power loss.
Xicor Data Book 5-119 (7pp)

16 **"The NOVRAM Family: A New Domain of System Possibilities"**
(X2201A, X2210, X2212, X2400, X2001, X2002, X2004)
Describes the NOVRAM, a static volatile RAM overlaid bit for bit with a nonvolatile EEPROM "shadow" memory.
Xicor Data Book 5-103 (7pp)

17 **"The Nine Most Frequent NOVRAM Questions"**
(X2200 Series)
A clarification of nine point in regard the operating characteristics of nonvolatile RAM.
Xicor AB Vol. 2, No. 10 (3pp)

18 **"The X2444 Serial NOVRAM Teams up with the 8051 Microcontroller Family"**
(X2444, 8051)
Explains the use of the X2444 256-bit serial NOVRAM as a parameter store and scratchpad memory.
Xicor AN-105 (5pp)

19 **"Using Data Polling in an Interrupt Driven Environment"**
(X2864A)
Tutorial information on the use of data polling in the X2864A EEPROM, including 6800 code for its use in an interrupt environment.
Xicor AB Vol. 2, No. 12 (3pp)

20 **"X2816A Design Allows Upgrade to X2864A and Beyond"**
(X2816A, X2864A)
Explains how a universal socket can accommodate 16K to 256K EEPROMs by means of two jumpers.
Xicor AB Vol. 1, No. 5 (3pp)

MEMORY

E^{2}PROMs (cont)

1 **“Reliability Issues for the MCM2833”**
(MCM2833)
To understand the reliability issues of a E2PROM, it is necessary to describe the functionality of its memory cell. The MCM2833 memory cell is discussed in this context with emphasis on data retention and program/erase endurance.
Motorola AN-908 (2pp)

2 **“““Reliability Aspects of a Floating Gate E2PROM”””**
(2816)
Discusses a number of E2PROM failure mechanisms for both erase/write cycling and data retention.
Intel 1985 Memory Components Handbook AP-100 (7pp)

3 **“Data Protection for E2PROMs and NVRAMs”**
(2817, 2004, 2816A)
When power is switched, unstable system control signals can alter the data in the non-volatile cells of all in-circuit non-volatile memory devices. This note discusses the nature of these unstable signals and shows how on-chip circuitry protects the data integrity of Intels 2817A, 2004, and 2816A memories.
Intel 1985 Memory Components Handbook AP 165 (10pp)

4 **“MCM2833 Functional Description”**
(MCM2833)
Describes the operation and performance of the MCM2833 EEPROM.
Motorola AN-909 (5pp)

5 **“Reliability Issues for the MCM2833”**
(MCM2833)
To understand the reliability issues of a E2PROM, it is necessary to describe the functionality of its memory cell. The MC2833 memory cell is discussed in this context with emphasis on data retention and program/erase endurance.
Motorola AN-908 (2pp)

6 **“A Voltage Switching Circuit for the ER2810”**
(ER2810)
The ER2810 electrically erasable read only memory requires switching of voltages on various pins to control the mode of operation. This note describes a simple, low-cost circuit for providing this control.
General Instrument Bulletin 1219 (1pp)

7 **“Data Retention Testing of ER3400”**
(ER3400)
Describes nondestructive analog-test procedure for determining EAROM data-retention capability.
General Instrument Bulletin 1210 (1pp)

8 **“EAROMs Replace Mechanical Switches”**
(ER1400)
Reports how CRT terminal makers use EAROMs to replace DIP switches to lower costs, reduce parts count, improve reliability and obtain field programmability of hardware options.
General Instrument Bulletin 1209 (3pp)

E^{2}PROMs (cont)

9 **“EAROM—The Electrically Word Alterable Memory for Permanent Storage”**
Presents a concise description of MNOS technology, EAROM characteristics and some applications.
General Instrument Bulletin 1215 (2pp)

10 **“Generating EAROM Programming Voltages from a 5-Volt Supply”**
Most EAROMs and EEPROMs require relatively high voltages for erase and write operations. This note describes a low-cost DC to DC converter circuit capable of generating this voltage from a + 5 volt power supply.
General Instrument Bulletin 1220 (1pp)

11 **“Interfacing the ER3400 to an Eight Bit Microcomputer”**
(ER3400)
Describes how to interface and control two ER3400 EAROMs with a PIC 1650 microcomputer. The ER3400 is organized as 1K x 4 bits. To obtain an 8-bit data word with a minimum of I/O lines and no additional hardware, two 1K x 4 bit EAROMs are connected in parallel and accessed simultaneously. In addition to creating an 8-bit data word, this effectively cuts erase and write times in half.
General Instrument Bulletin 1218 (3pp)

12 **“Measuring Data Retention of the ER0082”**
(ER0082)
The length of time that data may be retained in a non-volatile memory is a crucial parameter to the system designer. Many EAROM devices incorporate circuitry that enables this parameter to be measured. The method for doing this is described in this note.
General Instrument Bulletin 1222 (1pp)

13 **“Microprocessor Interfaces to the ER1400 EAROM”**
(ER1400)
Shows how to interface a serial I/O EAROM with four popular microprocessors using a variety of techniques.
General Instrument Bulletin 1207B (5pp)

14 **“N Channel EEPROMs Offer Increased Speed and Density”**
Discusses the evolution of electrically alterable non-volatile memory technology from p-channel to n-channel devices, and its impact for the system designer.
General Instrument Bulletin 1216 (4pp)

15 **“The ER3400: An Easy to Use 4K EAROM”**
(ER3400)
Describes use of the ER3400 p-channel EAROM in both microprocessor-based and random-logic-based systems requiring either in-system or out-of-system programming.
General Instrument Bulletin 1217 (3pp)

16 **“The Role of Non-Volatile Memories in Consumer Electronics”**
Briefly describes MNOS technology, updating EAROMs, and use of EAROMs to store data, to keep track of system status, and store programs for microcontrollers.
General Instrument Bulletin 1202 (3pp)

MEMORY

E²PROMs (cont)

1 **“Memory Margining Byte-Wide EEPROMs”**
(NCR 52832, 52864)
Gives information for margining and predicting retention time for a family of byte-wide electrically erasable PROMs.
NCR MD-215 (10pp)

2 **“Memory Margining Serial I/O EEPROMs”**
(NCR 52801)
Gives information on margining and predicting retention time for a family of serial I/O electrically erasable PROMs.
NCR MD-213 (7pp)

3 **“Memory Margining Serial I/O EEPROMs”**
(NCR 59308)
Describes margining and predicting of retention time for a family of serial I/O electrically erasable PROMs.
NCR MD-214 (6pp)

4 **“Microprocessor Interface to the NCR Bytewide”**
(NCR52832, NCR52864)
An introduction to 5V-only electrically erasable PROMs and principles of microprocessor interfacing.
NCR MD-208 (6pp)

5 **“Microprocessor Interface to the NCR Bytewide E²PROMs”**
(NCR52832, NCR52864)
An introduction to 5V-only electrically erasable PROMs and principles of microprocessor interfacing.
NCR MD-208 (6pp)

6 **“E-Squared Reliability Report”**
(5213)
Focuses on a 2048x8-bit electrically programmable and erasable read-only memory and its read integrity, data retention reliability, and endurance over time.
Seeq AN-1 (5pp)

7 **“Avoiding Problems Caused by Capacitive Coupling Between Input Signal Lines on 21-Volt EEPROMs”**
(NMC2816)
The high input impedance of MOS memories makes board layout, signal shielding, packaging, and drive characteristics important in minimizing the effects of pin-to-pin coupling between input signal lines. Note explains methods for preventing data loss.
National Semiconductor AB-13 (2pp)

8 **“Designing with serial EEPROMs”**
Discusses serial EEPROMs in terms of power transient protection and interfacing to parallel and serial ports.
NCR MD-209 (7pp)

9 **“Designing with the NMC9306/COP494—A Simple to Use E²PROM”**
(NMC9306/COP494)
Outlines several methods of interfacing an NMC9306/COP494 with the COPS family and other microprocessors.
National Semiconductor AN-338 (8pp)

10 **“EEPROM Application Note; Vpp Generation on Bcard”**
(NMC2816, NMC9716)
The NMC2816 requires a 21-volt pulse for writing and erasing, with the rise time on the pulse ideally going from 5 to 21 volts in 600 μs. This note discusses two methods of generating the required V_{pp} voltage or the high-level pulse from a 5-volt supply.
National Semiconductor AN-328 (6pp)

E²PROMs (cont)

11 **“EEPROM Stores High Scores in Video Games”**
Discusses the use of 5V-only EEPROMs in video game cartridges.
General Instrument AB-199 (2pp)

12 **“E²ROM Interfacing”**
(52B33)
Covers interfacing issues for linking 8085, 8086, 8088, Z80, and 71840 microprocessors with both latched and timer-type E²ROM devices.
SEEQ AN-8 (17pp)

13 **“High-Density EEPROM Design Considerations”**
(52832/64)
Outlines hardware and software design considerations in applying high-density EEPROMs. Details hardware design techniques for implementing a 28-pin socket that accepts EEPROMs from multiple vendors. Includes hardware and software considerations for interfacing the NCR 52832 to various microprocessors.
NCR Corp. MD-204 (7pp)

14 **“Low-Density Byte-Wide EEPROM Applications”**
(NCR53001, NCR53002, NCR53004)
Describes the functionality of byte-wide, fast-write, 5V-only EEPROMs and outlines possible applications and system integration techniques.
NCR Corp. MD-207 (4pp)

15 **“Microprocessor Interfacing with the 52B13 Latched 16K EEROM”**
(52B13)
Discusses the interfacing of the 52B13 latched electrically erasable read-only memory to a microprocessor bus.
SEEQ (9pp)

16 **“NOVRAM Family, Easier Than Ever to Use”**
Explains the basics of NOVRAMs, static RAMs overlaid with EPROMs, and discusses their use in a 6502-based system.
Xicor AN-101 (6pp)

17 **“Page-Alterable EEPROMs”**
(NCR52832, NCR52864)
Outlines the key advantages and applications of page-alterable, 5V-only, high-density EEPROMs compared to byte-alterable EEPROMs of equal density.
NCR Corp. MD-202 (6pp)

18 **“Power-Up/Down with Seeq’s 52BXX E²ROM Family”**
(52B13, 52B23, 52B33)
As the use of E²ROMs increases, applications are expanding into environments where Vcc may be undependable and power glitches may occur. Describes a simple method for preventing false writes during power-up/down conditions.
SEEQ AN-10 (4pp)

19 **“Protecting Data in NMC9306/COP494 and NMC9346/COP495 Serial EEPROMs”**
(NMC9346/COP495, NMC9306/COP494)
Explains the read-only mode of a nonvolatile serial access memory and its activation to prevent accidental data disturbance during power up and power down.
National Semiconductor AB-15 (2pp)

MEMORY

E²PROMs (cont)

1 **"SNOS Non-Volatile Memory Reliability"**
A discussion of the Silicon Nitride Oxide Silicon process, which used an n-channel, silicon gate, double-level polysilicon technology.
NCR MD-210 (16pp)

2 **"Serial EEPROMs"**
(NCR59308)
Outlines hardware and software considerations in the design of low-density serial EEPROMs when used in conjunction with single-chip microcomputers.
NCR Corp. MD-206 (5pp)

3 **"Storing Data in NOVRAM Memories During Power Failure"**
Briefly introducing Novram RAM/EEPROMs, this note gives details for ac and dc power failure protect circuits.
Xicor AN-102 (5pp)

4 **"The World's Easiest to Use EEPROMs are Here"**
(X2816A, X2804A)
Gives full details on the operation of the X2816A 2048x8 and X2804A 512x8 EEPROMs. Topics include compatibility of the X2816A with standard 2Kx8 RAM sockets and microprocessor interfacing.
Xicor AN-104 (6pp)

5 **"Xicor Replaces DIP Switches and Trimmers with NOVRAM Memories"**
Explains how NOVRAM RAM/EEPROMs can replace DIP switches and trimming potentiometers in many applications such as tuneable crystal oscillators, self-calibrating interchangeable probe thermometers, software programmable voltage references, and automatic scale calibrators.
Xicor AN-103 (7pp)

FIFOs/LIFOs

6 **"SN54/74LS222-228"**
(SN54/74LS222-228)
Explains the operation of the SN54/74LS222 Series of FIFOs, which do not offer asynchronous operation under all possible conditions for the IR and OR output status flags.
Texas Instruments SDLA002 (2pp)

7 **"Understanding the IDT/7201/7202 FIFO"**
(IDT7201, IDT7202)
Discusses different types of FIFO queuesTRANSLATION ERRORsimple, fixed length, variable field, fall through, and two-pointer. Also describes their implementation and performance.
Integrated Device Technology (21pp)

General

8 **"An Evaluation Tool for the MC68451 MMU"**
(MC68451)
To evaluate an LSI microprocessor peripheral, it is often necessary to design a prototype board that allows the programmer access to the peripheral. If the peripheral is such that a different system can be used, a "daughter" board can sometimes be added to an existing system, allowing evaluation of the new part without a complete system board. This note describes such as evaluation system for the MC68451 Memory Management Unit.
Motorola AN-880 (6pp)

General (cont)

9 **"Applying Modern Clock Drivers to MOS Memories"**
(DS0025, DS0026)
Covers use of 0025/26 drivers in MOS memory systems. Information includes selection of packages and heat sinks, power dissipation, rise and fall time, power supply decoupling, system clock line ringing and crosstalk, input coupling techniques, and sample calculations.
National Special Functions Databook AN-76 (12pp)

10 **"Designing Synchronous/Asynchronous-Compatible Memory Systems"**
Explains the difference between synchronous and asynchronous memory systems, the tradeoffs, and suitable applications.
Harris TB-58 (3pp)

11 **"Error Detection and Correction Using SN54/74LS630 or SN54/74LS631"**
(SN54LS630, SN54LS631, SN74LS630, SN74LS631)
Discusses the need for improved error detection systems and the use of the SN54/74LS630/1 for reducing downtime in large memory boards.
Texas Instruments CA-201 (18pp)

12 **"Memory Applications Handbook"**
Contains assorted applications material on memory products manufactured by National Semiconductor. Individual application notes described and listed elsewhere.
National $11.00 (206pp)

13 **"Memory Designers Guide"**
(MK4564, MK4116, MK4027, MK4801A, MK4802)
Includes general information, and a number of application notes on dynamic and static RAMs.
Mostek Memory Designers Guide (425pp) $10.00

14 **"Memory Margining for the SNOS Process"**
Outlines procedures for measuring retention and endurance parameters on the company's nonvolatile RAMs and EEPROMs. Discusses techniques for incoming inspection verification of device conformance to published specifications.
NCR Corp. MD-205 (5pp)

15 **"Precautions to Take When Driving Memories"**
When driving memories, problems can arise that cause memory errors or memory damage. This note discusses two problem areas, voltage overshoot and switching spikes, and outlines precautions to be taken.
National Semiconductor AN-305 (4pp)

16 **"Printed Circuit Board Layout for BYTEWIDE"**
Presents the issues involved in minimizing noise in PC board layouts and their application to Bytewide memory designs.
Mostek 1982/83 Memory Designers Guide IV-1 (6pp)

17 **"Reading and Writing in Floppy Disk Systems Using Motorola Integrated Circuits"**
A floppy disk drive requires precision controls to position and load the head, and well-defined read/write signals in terms of amplitude and timing, in order that a viable system will result. This note deals with the read and write data paths, including head control and erase circuitry.
Motorola AN-917 (16pp)

18 **"System Considerations for Using Memories in Leadless Chip Carriers"**
Discusses different types of leadless chip carriers, soldering techniques, substrate choice, chip carrier replacement, and standardization.
Mostek 1982/83 Memory Designers Guide VI-3 (9pp)

MEMORY

General (cont)

1 **"Using Slower Memories with the VIS Display System"**
(CDP1869, CDP1870)
The scheme described nearly doubles memory access time of the system and permits use of memories approximately half as fast as those normally required with the VIS system.
RCA ICAN-6889 (4pp)

Microprogramming

2 **"ER2055 Benchtop Programmer"**
(ER2055)
Enables the user to become familiar with the operation of the ER2055 prior to designing it into a prototype circuit for a manual benchtop programmer.
General Instrument Bulletin 1221 (4pp)

"How to Design with the 8X02 Control Store Sequencer"
See listing under (Microprocessor) Systems (Signetics)

3 **"MC68704P2 8-Bit EPROM Microcomputer Programming Module"**
Provides programming information for construction and operation of the programming module used to program the MC68704P2 EPROM Microcomputer Unit.
Motorola AN942 (21pp)

4 **"Signetics Micro Assembler Reference Manual"**
See listing under (Microprocessor) Programming (Signetics)

5 **"Tri-State Logic in High Speed Memories of Microprogrammed Computers"**
See listing under (Digital) TTL, General (National)

PROMs

6 **"CMOS PROM Power Advantages"**
Compares CMOS PROMs, NMOS EPROMs, CMOS EPROMs, bipolar RAMs, and bipolar power-down PROMs in terms of power and speed.
Harris TB-57 (3pp)

7 **"Harris HH-6616 Compatibility with the 2716 EPROM"**
(HM6616)
Details on the HM-6616 2Kx8 CMOS PROM and two exceptions to pin compatibility with the industry standard 2716 UV EPROM.
Harris TB-56 (2pp)

8 **"Harris' HM-6616 PROM Outperforms EPROM with CMOS Advantages"**
(HM6616)
Compares access time, power consumption, leakage current, temperature range, and supply voltage range for the HM-6616 2-Kword x 8-bit CMOS fuse-link PROM, the 2716 NMOS EPROM, and 27C16 CMOS EPROM.
Harris TB-55 (1pp)

PROMs (cont)

9 **"Two-Line Control of the HM-6641 CMOS PROM"**
(HM6641)
Details on implementing two-line control of a 512x8 CMOS PROM.
Harris TB-46 (3pp)

10 **"32K EPROM Decision TMS2532 or Intel 2732"**
(TMS2532, 2732)
Compares two devices as to operation, microprocessor compatibility, plus timing and electrical parameters.
Texas Instruments Application Report MM9010 (12pp)

11 **"32K EPROM Programming Hardware"**
(MBM2732, 2732A)
Provides a detailed cross reference between these 32K EPROMs and the proper programming hardware.
Fujitsu Microelectronics TB-002 (2pp)

12 **"A CMOS 64K EPROM Using N-Well Technology"**
(MBM27C64)
Describes the design of a new generation of EPROMs using double-polysilicon, p-sub n-well CMOS technology.
Fujitsu AR-002 (4pp)

13 **"A Guide to Implementing Logic Functions Using PROMs"**
Illustrates techniques for using PROMs to efficiently emulate logic functions. Block diagrams provided.
National Memory Applications Handbook (4pp)

14 **"A PROM Programmer for the SC/MP LCDs"**
(MM4204, MM5204)
Provides a method for the user of the SC/MP LCDs to program MM4204 PROMs. Using wire-wrap techniques the user can construct a programmer that plugs into the SC/MP LCDs backplane and programs a 512 x 8 PROM in 10 seconds.
National Memory Applications Handbook AN-189 (23pp)

15 **"Fujitsu EPROMs: Designing in the Upward Compatible Pin Site"**
(MBM2716, 2732A, 2764, 27C64, 27128)
Describes system upgrading procedures for the company's line of 16 to 128 Kbit bytewide EPROMs. In-system programming, power considerations and SRAM/ROM compatibility are covered.
Fujitsu Microelectronics AN-004 (9pp)

16 **"Fujitsu EPROMs: Programming Erasing, and Data Retention"**
(MBM2716, 2732, 2732A, 2764, 27C64, 27128, 27C128)
Examines the programming, erasure, and data retention characteristics of the company's EPROMs.
Fujitsu Microelectronics AN-006 (8pp)

17 **"Fujitsu Registered PROMs Offer a New Tool for the Logic Designer"**
Gives details on a family of PROMs and their efficiency in providing the microcode instructions required by pipelined instruction sets.
Fujitsu AN-008 (5pp)

"Intel Memory Design Handbook"
See listing under (Memory) RAMs (Intel)

18 **"PROM Power Switching Alternatives"**
Describes circuits for external power switching of Tri-State bipolar PROMs to reduce average power requirements. Circuits directly interface active data bus.
National Semiconductor AN229 (6pp)

MEMORY

PROMs (cont)

1 **"PROM Power-Down Circuits"**
(DM74S287)
Describes several ways to power-down bipolar, three-state PROMs.
National AN-171 (4pp)

2 **"Programming 2732 PROMs with the CDP18S480 PROM Programmer"**
(CDP18S480)
Describes procedure for programming 2732 PROMs with the CDP18S480 PROM programmer.
RCA ICAN-6847 (4pp)

3 **"Programming Intel's 27256 EPROM"**
(27256)
Discusses programming characteristics of the 27256 32K byte EPROM.
Intel 1985 Memory Components Handbook AP-154 (5pp)

4 **"Understanding and Using the CDP18U42 EPROM"**
(CDP18U42)
Cover design and programming characteristics of a 256 x 8-bit nonvolatile, UV EPROM; includes discussions on programmer circuit options and device applications.
RCA ICAN-6925 (8pp)

RAMs

5 **"HM-6516: Low-Power Synchronous CMOS RAM"**
(HM-6516)
Introduces a 2Kx8 synchronous RAM using an advanced planar SAJI IV process and manufactured with a sub-2.5-micron single poly process.
Harris TB-54 (1pp)

6 **"Harris HM-6514 Compatibility with the 2114"**
(HM6514)
Compares the HM-6514 1024 word x 4-bit CMOS static RAM with the popular 2114.
Harris TB-10 (8pp)

7 **"Key Issues of Surface Mounted ICs"**
Complete details on standard types of surface mount ICs.
Texas Instruments SMFY002 (7pp)

8 **"Topological Structure of the TMS4161 Multiport Video RAM"**
(TMS4161)
Defining the internal architecture and function of a video RAM, this note gives information for a device's memory array and shift register to be properly tested to guarantee device adherence to application requirements.
Texas Instruments

9 **"1K CMOS RAMs"**
(MM54C920, MM54C921, MM74C920, MM74C921, MM54C929, MM74C929, MM54C930, MM74C930)
Presents considerations for designing with CMOS RAMs. Considers synch vs asynch memory, memory structure and timing, and characteristics of devices.
National Memory Applications Handbook (13pp)

RAMs (cont)

10 **"2001 Non-Volatile RAM Protects Critical System Data at Low Cost"**
(2001)
Discusses applications of NVRAMs and shows how to design the 2001 NVRAM into systems using the MC5-51 microcontroller on the iAPX188 microprocessor.
Intel 1985 Memory Components Handbook AP-176 (11pp)

11 **"256-Cycle Refresh Conversion"**
(TMS4164)
Presents illustrations that show how to convert a system to a design with maximum flexibility.
Texas Instruments

12 **"620x480 Resolution with the TMS4161"**
(TMS4161)
Illustrates the configuration of dual-port video DRAMs for a 640x480 graphics system.
Texas Instruments Supplement to MOS Memory Data Book 1984 (7pp)

13 **"64K Dynamic RAM Architecture"**
(TMS4164)
Includes discussion of performance, reliability and cost.
Texas Instruments DR-1

14 **"64K Dynamic RAM Refresh Analysis System Design Considerations"**
(TMS4164)
Presents refresh information and discusses compatibility with other DRAMs.
Texas Instruments DR-2

15 **"64K-256K Plastic Leaded Chip Carrier Compatibility"**
Illustrates the compatibility of 64K and 256K plastic leaded chip carriers through proper footprint layout.
Texas Instruments SMFA002 (3pp)

16 **"64k Dynamic RAM Memory Board with Transparent Refresh"**
(MCM4116, MC3242, MC3480)
Describes circuits for implementing hardware-refreshed 64k dynamic memory board for use with 6800 or 6809-based systems.
Motorola Semiconductor AN-835 (7pp)

17 **"A 256K DRAM Organized for Applications Solutions"**
(TMS4256)
This 256K DRAM primer outlines the possibilities inherent in moving from 64K to 256K chips, giving directions on how to best make the transition.
Texas Instruments SMQY001 (12pp)

18 **"A CMOS Keyboard Data Entry System for Bus Oriented Memory Systems"**
(MC14419)
Describes a keypad to binary data entry system for placing data in RAM memories. It allows data to be entered through keystrokes encoding 4-bits at a time.
Motorola Application Note AN-759 (4pp)

"A High Speed FIFO Memory Using the MECL MC10143 Register File"
See listing under (Digital) High Speed Logic (Motorola)

19 **"A Memory Design for an 8080A-Based Microprocessor System"**
(INS8080A, MM5290)
Describes a memory design for a system with up to 64 bytes of R/W memory in 16 kbyte increments. Provision is made for further address decoding (up to 1 megabyte). Includes schematics, timing diagrams.
National Memory Applications Handbook (8pp)

MEMORY

RAMs (cont)

1 **"A Method of Implementing Stacks with Existing Minicomputer Memory"**
Gives detailed description of a controller for a stack of programmable size up to 256 words for a 16-bit minicomputer with less than 16K of memory. Tells how stack size can be increased to 4096 words by adding ten ICs.
National AN-60 (4pp)

2 **"A Testing Philosophy for 16K Dynamic Memories"**
(MK4116)
Discusses test procedures that relate to the quality and reliability of memory chips, including characterization tests, reliability tests, and final test. Includes a comparison of available 16K dynamic RAMs.
Mostek 1982/83 Memory Designers Guide III-103 (12pp)

3 **"Addressing Considerations When Testing the MB8264 and MB8265 64K Dynamic RAMs"**
(MB8264, MC8265)
Testing a random acess memory requires a detailed description of the internal topology and address decoding of the device in order to properly run complex disturb patterns and to optimize testing procedures. This note provides this information for the MB8264 and MB8265 64K dynamic RAMs.
Fujitsu TB-001 (4pp)

4 **"Addressing Considerations When Testing the MK4116"**
(MK4116)
Describes the internal topology of the MK4116 16K dynamic RAM, and provides information for checking for worst-case patterns or for optimizing test sequences.
Mostek 1982/83 Memory Designers Guide III-83 (7pp)

5 **"An In-Depth Look at the MK4027"**
(MK4027)
Gives complete information on the MK4027 4K RAM, including process steps, internal operation, memory cycles and refresh.
Mostek 1982/873 Memory Designers Guide III-121 (13pp)

6 **"An Introduction to Cache Memory Systems and the TMS2150"**
(TMS2150)
Describes the use of cache memory architecture to enhance the throughput of many microprocessor systems. The technique allows large, low-cost memory to perform like high-speed RAM.
Texas Instruments SR-1 (8pp)

7 **"An Introduction to the TMS4256 and TMS4257"**
(TMS4256, 4257)
Gives details on the architecture of 256K dynamic RAM devices, discussing control signals, cycle types, modes, options, and enhancements.
Texas Instruments SMQA001 (9pp)

8 **"Applications of the Intel 2104A 4K RAM"**
(2104A)
Discusses operation of the device including power distribution and decoupling.
Intel Application Note AP-23 (13pp)

9 **"CEMOS I High-Performance 16K (4K x 4 Bit) Static RAMs"**
(IDT71681, IDT6168)
Offers application examples of the IDT71681/6168 static RAMs as microprogram, mapped, and cache memories, as local stacks for high-performance ALUs, and in video display controllers and digital filters.
Integrated Device Technology (12pp)

RAMs (cont)

10 **"CMOS MK3805 Provides Real Time Clock/Calendar to a Z80 Bus"**
(MK3805)
Describes the Mk3805 and its operation, including interface requirements and alternatives. A sample program is given.
Mostek 1982/83 Z80 Designers Guide V-105 (30pp)

11 **"Charge Pump Driver for 7001 RAMs"**
(SN54508)
Defines a method for driving the charge storage pump input of a 7001 RAM. Provides a description of the basic storage pump RAM cell and the charge pump circuit diagram. Gives performance curves.
Texas Instruments Application Report CA-178 (6pp)

12 **"Designing Memory Systems for Microprocessors Using the Intel 2164A and 2118 Dynamic RAMs"**
(2164A, 2118, 8203)
Describes microprocessor memory system design using Intel dynamic RAMs and the 8203 dynamic RAM controller. Includes logic schematics, timing diagrams and system design considerations.
Intel AP133 (38pp)

13 **"Designing Memory Systems with the Intel 2186 and 2187 iRAMS"**
(2186, 2187)
Discusses a new type of RAM, called the iRAM (integrated RAM), which combines the best features of the SRAM and DRAM, and eliminates the need for designing refresh control circuits.
Intel AP-132 (38pp)

14 **"Designing Minimum/Nonvolatile Memory Systems with CMOS Static RAMs"**
(CDP1800)
Details system considerations and circuit requirements for CDP-1800 series RAM operation and data retention in CDP1802-based systems. Discusses interfacing complexity vs memory size, power distribution, power-up/power-down control and battery selection.
RCA ICAN-6943 (25pp)

15 **"Designing the 2004 Non-Volatile RAM into Your System"**
(2004)
Discusses applications for NVRAMs and shows how to design the 2004 into systems using the MCS-51, iAPX86/88 or iAPX186/198 microprocessors.
Intel 1985 Memory Components Handbook AP-173 (17pp)

16 **"Designing with 16K and 64K Dynamic RAMs"**
(NMC4164, NMC5295)
Discusses design procedures using multiplexed-address, dynamic RAMs. Describes basic functions and RAM controller operation. Provides extensive electrical and timing diagrams.
National AN228 (16pp)

17 **"Designing with AMI's High Speed S2114H 1024x4 bit Static RAM"**
(S2114H)
Describes device and its use. Supplies block diagram, operating modes and timing diagrams.
American Microsystems (3pp)

18 **"Dual-Port Memory with High-Speed Serial Access"**
(TMS4161)
An introduction to a 64Kx1 dynamic RAM and its potential applications.
Texas Instruments Supplement to MOS Memory Data Book 1984 (8pp)

MEMORY

RAMs (cont)

1 **“Dynamic MOS RAMs”**
Discusses performance and design considerations of dynamic MOS RAMs, including multiplex timing considerations, page mode operation, and sense amplifier considerations.
Mostek 1982/83 Memory Designers Guide III-59 (6pp)

2 **“Dynamic Memory Refresh Considerations”**
(MCM6664A)
Discusses dynamic and static memory cell storage concepts, and the mechanics of refresh in dynamic RAMs.
Motorola AN-887

3 **“Dynamic RAM Board Design Made Easy”**
Discusses RAM chip characteristics, power supply and control signal distribution on PC boards, and control logic implementation. With schematics, PC layout.
National Memory Applications Handbook (9pp)

4 **“Guidelines for Designing Battery Backup Circuits for CMOS RAMs”**
Describes the various methods and interfaces for simplifying battery backed-up CMOS memory arrays. Includes a discussion of proper battery choice.
Harris Semiconductor AR-11 (7pp)

5 **“High Speed TTL Interfacing for 7001 Static RAMs”**
(SN75261, SN75365)
Illustrates interface techniques for driving the 7001 RAM chip-select input, and sensing the memory output.
Texas Instruments Application Report CA-179 (8pp)

6 **“High-Performance Memory Access with the TMS4161”**
(TMS4161)
Explains how the dual ports on a video RAM eliminate the bottleneck caused by display refresh overhead, and presents a method in which system timing generation supports the access of interleaved banks of display video RAMs.
Texas Instruments SMVA005 (3pp)

7 **“High-Speed Memory System Design Using 2147H”**
(2147H)
Describes the 2147H operation and discusses design criteria for high-speed memory systems.
Intel 1985 Memory Components Handbook AP-74 (21pp)

8 **“IDT7130 and IDT7132 Two-Port RAMs”**
(IDT7130, IDT7132)
Describes a family to dual-port RAMs with separate address, control, and data I/O.
Integrated Device Technology (12pp)

9 **“Improved Performance with the AM9124”**
(AM9124)
Discusses device advantages over the 2114, including power and dc parameters, and memory system design incorporating the device.
Advanced Micro Devices (6pp)

10 **“Intel 2164A 64K Dynamic RAM Device Description”**
Detailed description and operating analysis of the 2164A dynamic RAM.
Intel AP-131 (18pp)

11 **“Intel 2164A Dynamic RAM Device Description”**
(2164A)
Describes the design and operation of a new type of dynamic RAM featuring redundancy and single 5V operation.
Intel AP-131 (18pp)

RAMs (cont)

12 **“Intel Memory Design Handbook”**
(1103, 2107A, 2107B, 2416, 3207A, 3222, 3245, 5101, 5235, 5244)
Combines various RAM, ROM, PROM and CCD application notes plus information on support circuits.
Intel $5.00 (265pp)

13 **“Interfacing Static R/W Memories to the 8080A”**
(INS8080A)
Considers addressing techniques and memory interfacing for the 8080A family.
National Memory Applications Handbook (4pp)

14 **“Interfacing the 6800 Microprocessor to National MM74C910 Memory”**
(MC6800, MM74C910)
Outlines an area navigation system for aircraft using the devices.
National Memory Applications Handbook (2pp)

15 **“Interfacing to the Z6132 Intelligent Memory”**
(Z6132)
Discusses the features and operating modes of the Z6132 4K dynamic RAM, with interface example given for each of the company's microprocessors. Design requirements for interchanging the Z6132 with 2716/2732-type EPROMs are also given.
Zilog Microprocessor Applications Reference Book 4-3 (16pp)

16 **“Leakage and Continuity Test Considerations Using Fujitsu Microelectronics' Single Supply DRAMs”**
Explains the need for precautions against the electrostatic breakdown of a gate and describes the input protection circuitry included in a family of single-supply dynamic RAMs.
Fujitsu Microelectronics TB-003 (2pp)

17 **“MB8266A Nibble Mode”**
(MB8266A)
Explains nibble mode operation in dynamic RAMs and shows an application in a video display system.
Fujitsu Microelectronics TB-005 (4pp)

18 **“MK4801A/MK4802 for High Speed Applications”**
(MK4801A, MK4802)
Details the characteristics, operations and benefits of two NMOS static RAMs.
Mostek 1982/83 Memory Designers Guide IV-17 (13pp)

19 **“MOS Scratch Pad/Content Addressable Memory System”**
Describes a 64-bit Scratch Pad/Content Addressable Memory using MOS devices. Includes circuit diagrams and discusses circuit operations.
National MB-11 (2pp)

20 **“Memory Margining Byte-Wide NVRAMs”**
(NCR 52001, 52002, 52004)
Discusses margining and prediction of retention time for a family of byte-wide, nonvolatile RAMs.
NCR MD-212 (8pp)

21 **“Memory Margining Nibble-Wide NVRAMs”**
(NCR 52210, 52211, 52212)
Describes margining and predicting or retention time for a family of nibble-wide nonvolatile RAMs.
NCR MD-211 (8pp)

APP. NOTE DIRECTORY

RAMs (cont)

1 **"Memory Systems Characteristics and Applications for the CD4061A"**
(CD4061A)
Describes basic device operation, application in memory systems, and testing including construction of an all CMOS memory tester.
RCA ICAN-6445

2 **"Multiport Video RAM VS 32Kx8 DRAM Graphics Comparison"**
(TMS4161)
Compares two memory approaches for graphics systems with four color planes and 512x512 or 1024x1024 resolution. Considerations include parts count, board real estate, and refresh overhead.
Texas Instruments SVA001 (9pp)

3 **"NMOS RAM Offers Non-Volatility with DATASAVE"**
Explains how the Bytewide concept of RAM, ROM and EPROM interchange makes memory design more flexible, how it works, and how it can be integrated into a system.
Mostek 1982/83 Memory Designers Guide IV-7 (9pp)

4 **"Nonvolatile RAM Applications"**
(NCR52001, NCR52002, NCR52004, NCR52210, NCR52211, NCR52212)
Defines nonvolatile RAMs and gives a detailed technical description of the operation of 5V-only byte-wide and nibble-wide NVRAMs.
NCR Corp. MD-203 (5pp)

5 **"Optimized Testing of 16K RAMs"**
(MK4116)
Discusses the critical issues in 16K RAM testing, including test temperature, refresh testing, sense amplifier margin, and decoder and I/O testing.
Mostek 1982/83 Memory Designers Guide III-99 (4pp)

6 **"Printed Circuit Board Layouts for the Compatible Dynamic RAM Family"**
(MK4116, MK4332, MK4516, MK4528, MK4564)
Discusses techniques for memory board designs using these dynamic RAMs.
Mostek 1982/83 Memory Designers Guide III-17 (8pp)

7 **"Software Refresh Memory Board for an MC6809 System"**
(MCM4116, MCM4027, MCM6664)
Describes hardware and software for implementing a software-refreshed dynamic memory board for use with 6809-based systems.
Motorola Semiconductor AN-833 (5pp)

8 **"Software Refreshed Memory Card for the MC68000"**
(MC68000, MCM4116, MCM6664)
Describes hardware and software for implementing a software-refreshed, dynamic memory card using 16k or 64k RAMs for use in an 8-MHz MC68000 system.
Motorola Semiconductor AN-816 (6pp)

9 **"Static RAM Applications"**
(INS8900, MM5257)
Discusses memory support for a μP and power down for RAMs.
National Memory Applications Handbook (2pp)

10 **"TM4164EC4 Provides High-Density Memory Array "**
Describes a memory board using a single-chip DRAM controller and 64Kx4 memory modules. Schematics, edge connector pinout, and signal descriptions are included.
Texas Instruments SMA001 (7pp)

11 **"TMS4116 VS TMS4164 Data Sheet Differences"**
(TMS4116, TMS4164)

RAMs (cont)

12 **"TMS4164 Internal Topology"**
(TMS4164)
Discusses TMS4164 pinout, array organization, array bit map, and upper and lower array cell topology.
Texas Instruments DR-9

13 **"TMS4164 Printed Circuit Board Layout"**
(TMS4164)
Illustrates universal and p-c board layouts for the TMS4164.
Texas Instruments DR-6

14 **"TMS4164 and TMS4416 Interlock Clock"**
(TMS4164, TMS4416)
The TMS4164 and TMS4416 dynamic RAMs use a novel interlocked clock to yield enhanced immunity to process variations, temperature, and voltage-induced parametric changes. The interlocked clock structure provides a synchronous timing operation that eliminates race conditions. An overview of the memory control structure and its functions is included.
Texas Instruments SMDA015 (4pp)

15 **"TMS4164A and TMS4416 Input Diode Protection"**
(TMS4164A, TMS4416)
The TI 64K DRAM family provides the user with improved ESD protection and input clamping diodes for negative undershoot. This note discusses possible anomalous testing results if the inputs are driven to large negative voltages.
Texas Instruments DR12 (4pp)

16 **"TMS4256/TMS4257 Topology"**
(TMS4256, 4257)
The most critical test routines on dynamic RAMs require a thorough knowledge of the device topology.
Texas Instruments SMQA002A (5pp)

17 **"TMS4416 16Kx4 DRAM Device Structure"**
(TMS4416)
Describes pin configuration and 8x6 vs 7x7 addressing compatibility.
Texas Instruments DR-11

18 **"TMS4416 Internal Topology"**
(TMS4416, TMS4164)
Illustrates TMS4416 address bit significance, pinout, array organization, array bit map, and upper and lower array cell topology.
Texas Instruments DR-10

19 **"TMS4416/TMS4500A Evaluation Board"**
(TMS4416, TMS4500A)
Illustrates memory system implementation using the TMS4416/TMS4500A evaluation board. The board is populated with a TMS4500A DRAM controller and 16 TMS4416s. It allows construction of several processor systems without redesign of the memory section for each system.
Texas Instruments SMAA001 (6pp)

20 **"TMS4464 Topology"**
(TMS4464)
Presents the topology of the TMS4464.
Texas Instruments SMBA641 (8pp)

21 **"TTL Drivers for the TMS4416-15"**
(TMS4416-15, Z80, Z8000)
Some form of drive circuitry is needed when DRAMs are used with processors such as the Z80 or Z8000. This note discusses an efficient, cost-effective approach using TTL devices as drivers.
Texas Instruments SMBA013 (5pp)

MEMORY

RAMs (cont)

1 **"Test Implications of Higher Speed 16K RAMs"**
Deals with the problems of testing fast 16K RAMs.
Mostek 1982/83 Memory Designers Guide III-115 (6pp)

2 **"Testing Philosophy for the TMS4161"**
(TMS4161)
Describes operation of the TMS4161 multiport video RAM, tester requirements, test strategy, and suggested test approaches.
Texas Instruments SVA002 (4pp)

3 **"The 5-Volt, 64K Dynamic RAM is Here, So is The 32K, So is The 16K!!!"**
(MCM4516/17, MCM6664/65, MCM6634)
Provides diagrams and instructions for optimizing memory-board layout using three types of RAMs in an expandable system. Emphasizes planning of addressing at the card edge, and physical and logical row selection on the card.
Motorola AN-805 (5pp)

4 **"The Nonvolatile RAM for Microprocessor Applications"**
(M193, M120)
Compares cell structure and operation of EPROMs, EAROMs, and NVRAMs. Emphasizes NVRAM applications.
SGS-ATES DN317 (15pp)

5 **"Transparent Refresh Using SN74LS600AN and SN74LS601AN"**
(SN74LS600A, SN74LS601A)
Describes how dynamic RAM refresh can be accomplished without interrupting CPU cycle time.
Texas Instruments AR-SDLA001 (4pp)

6 **"Use of CMOS RAM CDP1824 with RCA Microprocessor Evaluation Kit 18S020"**
(CDP1824)
Describes the CDP1824 and its application in the CDP18S020 Evaluation Kit, and presents examples of how the CDP1824 can be combined with the CDP1831 ROM to form efficient ROM-RAM systems.
RCA ICAN-6537 (4pp)

7 **"Use of CMOS-SOS RAM CDP1822 with RCA Microprocessor Evaluation Kit CDP18S020"**
(CDP1822)
Describes the CDP1822, its operation, and its application in the CDP18S020 Evaluation Kit.
RCA ICAN-6539 (4pp)

8 **"Using 64 Kbit Dynamic RAMs with EF9365, EF9366, EF9367 Graphic Display Processor"**
(EF9365, EF9366, EF9367)
Explains the use of 64K x 1 and 16K x 4 dynamic RAM memory chips in designing a graphic display system built around the EF9365/6/7 processor circuits.
Thomson CSF Components NA-035A (22pp)

9 **"Using Dynamic RAMs"**
(MK4027, MK4116)
This note discusses the considerations in designing a memory system using the MK4027 or MK4116 via a demonstration memory board designed for the Digital Equipment Corp. LSI-11 microcomputer.
Mostek 1982/83 Memory Designers Guide III-65 (15pp)

10 **"Using Synchronous Static CMOS RAMs"**
A detailed study of the design techniques required for high performance, low power, CMOS RAM arrays. An example array design is presented, and interfacing to common microprocessors is discussed.
Harris Semiconductor AN-101

RAMs (cont)

11 **"Using Tri State® Logic for Rubber Band Memories"**
Describes the construction and use of scratch/pad memories to store data at a rapid rate and then release it as required. They serve as buffers between systems operating at different clock rates.
National AN-68 (4pp)

12 **"Video Memory: Technology and Applications"**
(TMS4161)
Discusses the evolution of unique memory architectures to deliver higher performance for graphics, describes the state of the art in dual-port video RAMs, and speculates about future memory chip developments.
Texas Instruments SMVY002 (9pp)

13 **"Which Way for 16K?"**
Considers various aspects of 16K RAMs including 64 and 128 cycle refresh and the advantages versus disadvantages of latching.
Intel Application Note AP-22 (7pp)

14 **"Z80 Interfacing Techniques for Dynamic RAM"**
(MK4027, MK4116)
Provides specific examples of methods for interfacing 16-pin dynamic memories to the Z80.
Mostek 1982/83 Memory Designers Guide III-43 (16pp)

15 **"Z8000 Memory Interfacing Techniques"**
(MK4564)
Gives a functional description of the MK4564, timing charts for refresh and Z8001 timing, and interface schematic.
Mostek 1982/83 Memory Designers Guide III-37 (5pp)

ROMs

16 **"Custom ROM Programming"**
Gives forms for submitting truth tables for various National read only memories.
National AN-100 (8pp)

17 **"Designing With Signetics MOS ROM Family"**
Lists the advantages of designing with a generic printout family of EPROM/ROMs. Describes data and specifications of major lines of MOS ROM.
Signetics (50pp)

18 **"Fast Multipliers Using TTL Read Only Memories"**
(SN74182, SN74H183, SN74283, SN74284, SN74285)
Reviews fundamental algorithm of binary multiplication. Shows use of ROMs for multiplication, two's complement multiplication, and truncated multiplications.
Texas Instruments Application Report CA-172 (11pp)

"Intel Memory Design Handbook"
See listing under (Memory) RAMs (Intel)

"MOS Goes Bipolar"
See listing under (Memory) Shift Registers (National)

19 **"Memory System Upgrade, 16K EPROM to 32K EPROM, and 32K EPROM to 32K ROM"**
(TMS2516, TMS2532, TMS4732)
Describes and illustrates system upgrades involving read mode only and those involving program modes.
Texas Instruments MM9403

MEMORY

ROMs (cont)

1 **"Monolithic Diode Matrices"**
Describes programming and use of diode matrices. Applications: teletypewriter coding matrix, decimal decode for displays, nines complement-BCD, shift register matrices, and ROMs.
Harris Semiconductor AN-206 (16pp)

2 **"Saving ROMs in High-Resolution Dot-Matrix Displays and Printers"**
(DM8596, MM8597)
Describes two-stage, column-generation approach called "intermediate coding" that saves more than 25% of ROM capacity when several ROMs are needed to store a font.
National AN-85 (8pp)

3 **"The Application of ROMs"**
(MM5203)
Describes applications of read only memories in table look up, code conversion and generation, character generation, random logic generation, and microprogramming.
National AN-61 (12pp)

4 **"Trig Function Generators"**
Instead of simply cascading ROM to increase resolution and accuracy of the look-up tables, this note describes interpolation techniques to increase trig function accuracy with less memory.
National MB-10 (12pp)

5 **"Use of CMOS ROMs CDP1831 and CDP1832 with the RCA Microprocessor Evaluation Kit CDP18S020"**
(CDP1831, CDP1832)
Describes the operation and design of CDP1831- and CDP1832-based read-only memory systems in the CDP18S020.
RCA ICAN-6536 (4pp)

ROMs (cont)

6 **"Use of CMOS ROMs CDP1833 and CDP1834 with the RCA Microprocessor Evaluation Kit CDP18S020 and the EK/Assembler-Editor Design Kit CDP18S024"**
(CDP1833, CDP1834)
Describes the application of the CDP1833 and CDP1834 in the CDP18S020 Evaluation Kit and the CDP18S024 EK/Assembler-Editor Kit.
RCA ICAN-6635 (4pp)

Shift Registers

7 **"A Random Pattern Generator for Testing Digital Delay Elements"**
Describes the use of a linear feedback shift register for digital testing.
Advanced Micro Devices (3pp)

"COS/MOS MSI Counter and Register Design and Applications"
See listing under (Digital) CMOS (RCA)

"The Logical Design of Shift Counters"
See listing under (Digital) Counters. (Motorola)

"Using Shift Registers as Pulse Delay Networks"
See listing under (Digital) High Speed Logic (Motorola) Microprocessors.

CUSTOM/SEMICUSTOM

Gate Arrays

1 **"A 1.2K CMOS Gate Array"**
Describes a 1.2K CMOS gate array fabricated on a 3-micron, dual-layer metal M²CMOS process.
National Semiconductor AN-332 (4pp)

2 **"A 2.4K CMOS Gate Array"**
Describes a 2.4K CMOS gate array and comments on the design considerations incorporated in its definition. Also evaluates the effects of simultaneous switching of outputs, with inductive parasitics considered.
National Semiconductor AN-320 (6pp)

3 **"A 2.4K M²CMOS Gate Array, System Design Facility"**
(SCX6324)
Describes a gate array (SCX6324) fabricated on a 3-micron, dual metal, N-well, 5-volt process that typically provides internal propagation delays of less than 2 ns. Includes details of the basic cell element, electrical performance, process highlights and software capabilities.
National Semiconductor AN-322 (4pp)

4 **"Analog Capabilities on Metal Gate CMOS Arrays"**
Describes semicustom CMOS gate arrays for monolithic digital and low-power, high-performance linear design combinations.
Interdesign APN-32 (7pp)

5 **"Binary Addition/Subtraction and Binary/BCD Addition Utilizing Motorola's MCA2500ECL Macrocell Array"**
(MCA2500ECL)
Binary adders/subtractors and binary/BCD adders of various bit lengths are implemented with an ECL semicustom macrocell array.
Motorola Semiconductor AN953 (16pp)

6 **"Designing Macrocell Arrays Using Engineering Work Stations"**
Gives an introduction to semicustom arrays and engineering work station interfaces to the company's CAD system.
Motorola AN928 (4pp)

7 **"Designing with an LSI Bipolar Configurable Gate Array"**
Describes the technology, topology and circuit operation of an LSI bipolar configurable gate array.
Raytheon Semiconductor AN28 (24pp)

8 **"ECL/ALS Gate Array Family Application Guide"**
(MCA600, MCA1200ECL, MCA2500ECL, MCA1500M, MCA500ALS, MCA1300ALS, MCA2800ALS)
Provides a guide to application of ECL/ALS gate arrays, including array topology, macrocell descriptions, performance and packaging considerations.
National Semiconductor (42pp)

9 **"FGC6000 Series Advanced Two-Micron CMOS Gate Array Family"**
(FGC6000)
Describes characteristics and applications of the FGC6000 gate array series.
Fairchild (3pp)

10 **"FGE2000 ECL Gate Array"**
(FGE2000)
Offers complete details on the FGE2000 gate arrays, which utilize a cell-based, two-level, series gated (cascode) ECL circuit structure. A CAD system is also discussed.
Fairchild (15pp)

Gate Arrays (cont)

11 **"FTDL Example Programs for D.C., Function, and Delay Tests"**
Timing charts, timing diagrams, and program listings are given for testing a sample circuit of 4-bit parallel-access shift registers implemented with gate arrays.
Fujitsu AN-007 (8pp)

12 **"Gate Array and Custom VLSIC Fabrication with the M²CMOS Process"**
(M²CMOS)
Discusses the development of a bulk CMOS N-well process, containing a single level of polysilicon and two layers of metal, for the fabrication of gate arrays.
National Semiconductor AN-321 (6pp)

13 **"HE2000 Gate Array: Packaging and Thermal Considerations"**
(HE2000)
Explains how to calculate the Thermal resistance from the transistor junctions of the HE2000 gate array to the bottom of its 173-pin package. Also discusses heat sink, mounting, and air flow considerations.
Honeywell HE2000 AN-2 (4pp)

14 **"HE2000 Gate Array: Understanding CML Logic"**
(HE2000)
Describes the notational symbology for the CML high-speed, low-power ECL logic used in the HE2000 gate array, illustrating a CML inverter, latch, OR/NOR gate, AND/NAND gate, and Exclusive OR gate.
Honeywell HE2000 AN-1 (2pp)

15 **"HT5000 Gate Array: System Cost Analysis"**
(HT5000)
Shows how manufacturing cost savings and design time reduction can be achieved by using gate arrays rather than 7400-series devices.
Honeywell HT5000 AN-4 (4pp)

16 **"HT5000 Gate Array: System Partitioning Guidelines"**
(HT5000)
The first phase of implementing a system design using gate arrays is to partition the system into functional blocks, some of which correspond to gate array functions. This note leads the designer through the process with guidelines on partitioning by bus boundaries, available I/O pins, and available gates.
Honeywell HT5000 AN-3 (4pp)

17 **"HT5000 Gate Array: Understanding CML Logic"**
(HE5000)
Describes the notational symbology for the CML high-speed, low-power TTL logic used in the HT5000 gate array, illustrating a CML inverter, latch, OR/NOR gate, AND/NAND gate, and Exclusive OR gate.
Honeywell HT5000 AN-1 (2pp)

18 **"HT5000 Gate Array: Understanding Design Automation"**
(HT5000)
Describes a gate-array development system that lets designers interactively enter schematics, perform logic and fault simulation, automatically place cells and interconnect routing, and create pattern generator tapes for mask fabrication.
Honeywell HT5000 AN-5 (4pp)

CUSTOM/SEMICUSTOM

Gate Arrays (cont)

19 **"High-Performance TTL-Compatible Macrocell Arrays"**
(MCA500ALS, MCA1300ALS)
Introduces a series of macrocell arrays, covering cell types, logic design considerations, performance guidelines, CAD layout, and packaging options.
National Semiconductor AN-361 (38pp)

2 **"High-Voltage, Semi-Custom Component Arrays"**
(ULN-2350C, ULN-2351C)
Describes semi-custom arrays incorporating features not normally found in other arrays: high-voltage thin-film resistors, NPN power transistors, and vertical and lateral PNP transistors.
Sprague TP81-3 (4pp)

3 **"LSI TTL Gate Arrays"**
Describes some simple SSI and MSI circuits that can be converted to LSI-TTL gate arrays.
Ferranti Interdesign APN-26 (8pp)

4 **"On-Chip Memory and Test Functions for Gate Arrays"**
A high-performance M²CMOS array family is described along with considerations for future members incorporating on-chip memory. An advanced gate array incorporating an on-chip memory and test system is also discussed.
National Semiconductor AN-333 (6pp)

5 **"Precision Analog Monochips Host Low-Power, High-Speed Digital"**
The "MO" Series Monochips are semicustom gate arrays that have been optimized for analog circuitry yet can achieve digital speeds on the order of 20 ns. This note illustrates the implementation of an inverter/buffer function.
Ferranti Interdesign APN-30 (7pp)

6 **"SCX Family M²CMOS Gate Array System Cost Analysis"**
(SCX6324)
Because gate arrays become a complete subsystem of the total system cost, there is much more to be considered than just a direct component cost analysis. This note discusses the total system implications and hidden cost of design and manufacturing.
National Semiconductor AN-331 (4pp)

7 **"SCX microCMOS Gate Array Family Application Guide"**
Presents details on a family of high-speed, low-power microCMOS gate arrays.
National Semiconductor (22pp)

8 **"Secrets of CMOS Gate-Array Delay Specs"**
Discusses the importance of getting meaningful propagation delay data for CMOS gate arrays.
Gould AMI (5pp)

9 **"The Advantages of Large Bipolar Semi-Custom Arrays in Linear Systems"**
(MOA, MOB, MOE, MOF, MOG, MOH, MOJ, MOL, MOM, MON)
Relates the history of semi-custom bipolar linear arrays, explains the technology, and describes the cost considerations of semi-custom approaches.
Ferranti Interdesign APN-34 (12pp)

10 **"The Design of ISO3/5 Output Drivers and Buffers"**
(ISO3, ISO5)
Describes the various output structures available in the ISO3/5 family of CMOS gate arrays, their AC and DC parameters, and their proper implementation.
Universal Semiconductor AN1 (4pp)

Gate Arrays (cont)

11 **"The Impact of Semi-Custom ICs on Automotive Applications"**
(MOA, MOB, MOC, MOD, MOE, MOF, MOG, MOH, MOJ, MOL)
Covers some typical automotive or applications of semi-custom ICs, including a position sensor, brake light flasher, electronic cruise control, and speedometer.
Ferranti Interdesign APN-22 (8pp)

12 **"The Use of Bipolar Semiconductor Junctions in Linear Circuit Design"**
Addresses the fundamental properties of bipolar semiconductor junctions and shows how their basic voltage/current logarithmic relationship can be used in many types of circuits.
Ferranti Interdesign APN-33 (21pp)

General

13 **"Feasibility Studies for CMOS Semi-Custom Circuits"**
An in-depth analysis of the issues involved in the decision to go with semicustom circuits.
National Semiconductor AN-385 (15pp)

Linear and Linear/Digital Arrays

14 **"Analog MOS on Semicustom Integrated Circuits"**
(Monochip)
Describes a CMOS semicustom array series that can be used to produce analog and digital circuits on a single chip.
Ferranti Interdesign APN-23

15 **"Designing Low Frequency Filters on the CMOS Monochip"**
(Monochip)
Describes how to design monolithic low-frequency filters using switched capacitor techniques on a semicustom IC. Examples of low-pass, high pass, and band-pass designs are given.
Ferranti Interdesign APN-28 (24pp)

16 **"Low Voltage Bipolar Circuits"**
(Monochip)
Presents device parameters, circuit configurations, and performances of some representative circuits that will operate with a 1-volt supply using Monochip component arrays.
Ferranti Interdesign APN-25 (16pp)

17 **"VJ800 User's Guide"**
(VJ800)
An in-depth survey of the VJ800 analog master chip and the critical issues of designing with it.
VTC VJ800 User's Guide (35pp)

Programmable Logic

18 **"Field Programmable Logic Arrays—An Application Manual"**
Covers basic FPLA operation and described various applications, including a data cartridge tape drive controller, an opcode decoder for the PDP-11, and a combination sync and video generator.
Signetics (116pp)

CUSTOM/SEMICUSTOM

Programmable Logic (cont)

1 **“How to Design with Programmable Logic Arrays”**
(DM8575, DM8576)
Discusses operation of PLAs and use as code converters, decode elements in digital processors and sequential controllers.
National AN-89 (8pp)

2 **“Programmable PROM Memory Expansion”**
(82S102, 82S103)
Describes the use of FPGA in memory intensive systems, which may accept 4K, 8K, 16K, 32K, or 65K PROMs, simply by editing the FPGA program.
Signetics AB-005 (4pp)

3 **“Single Chip Multiprocessor Arbiter”**
Shows how the Field Programmable Logic Sequencer (FPLS) can use state logic to implement a multiprocessor arbiter conveniently and cost effectively.
Signetics AN-007 (4pp)

4 **“93Z459 FPLA Makes Versatile 12-Bit Address Comparator”**
(93Z459)
Details a 12-bit comparator made with an FPLA for use in a memory bank decoder, data trap on communication line, reset/preset for moduloOn counter, or recognition of a multiplexed display output.
Fairchild MHSL-5 (4pp)

5 **“93Z459 FPLA and R-S Latch Form Pulse Synchronizer”**
(93Z459, 74279)
Explains how a 93Z459 FPLA and 74279 R-S latch can emulate the 74120 pulse synchronizer.
Fairchild MHSL-4 (2pp)

6 **“A Study of the Fastest PAL (15 ns Max.) in the Industry—National’s PAL 20B Series”**
(PAL 20B Series)
Describes the electrical characteristics, and applications of the ultra-high-speed PAL20B Series.
National Semiconductor AN-388 (4pp)

7 **“Designing with the EP300 Programmable Logic Devices”**
(EP300)
An introduction to erasable-programmable logic ICs, effective devices for quick development of custom circuits and fast prototyping of circuits to be mass produced.
Altera AN-1 (17pp)

8 **“Field Programmable Logic”**
Provides the first-time user of field programmable logic with a basic understanding of this technology.
Texas Instruments SDPA001 (18pp)

9 **“HPL-16LCB Programmable Output Polarity”**
(HPL16LC8)
Gives details on the implementation and advantages of programmable output polarity in the HPL-16CL8 programmable logic device.
Harris TB-60 (3pp)

10 **“PAL Functional Testing”**
Without functional testing, PAL devices cannot be guaranteed to work properly in a system. This note describes an algorithm for generating test vectors and function tables from logic equations.
National Semiconductor AN-351 (20pp)

Programmable Logic (cont)

11 **“Replacing the 20-Pin Family with the EP300”**
(EP300)
Explains how the EP300 architecture allows configurations that directly replace all functions implemented with the 20-pin PAL family.
Altera AN-2 (11pp)

12 **“Simulating EPLD Designs”**
An introduction to erasable-programmable logic devices, describing structure, logic implementation, delay elements, and simulation. Sample circuit schematics provided.
Altera AN-4 (14pp)

13 **“The 93Z459 FPLA Interfaces Multiplexed 4-Digit Counter to Microprocessor”**
(93Z459)
Shows how a FPLA can be used to design a custom interface that eliminates random logic and software table lookup routines.
Fairchild MHSL-2 (2pp)

14 **“The EP300 is a Memory Interface Controller”**
(EP300)
Shows how erasable/programmable logic devices can be effectively used to replace discrete logic or ROMs in microcomputer address decoding for memory and peripheral devices.
Altera AN-3 (10pp)

15 **“Using the 93Z459 FPLA as a Phase/Frequency Detector”**
(93Z459)
Explains how a phase/frequency detector can be constructed with two packages instead of the four required when using TTL random logic gates.
Fairchild MHSL-1 (4pp)

Standard Cells

16 **“High-Performance TTL Compatible Macrocell Arrays”**
(MCA500ALS, MCA1300ALS)
Provides full details on the company’s Macrocell Array products, including logic design considerations, performance guidelines and CAD layout.
National Semiconductor AN361 (38pp)

17 **“Select Macrocell Array Circuits With a Computer Program”**
Deciding which arrays best fit in a system or how much logic fits in an array can be a complex engineering job. This note describes a computer program that starts with a list of LSTTL part numbers, then selects a bipolar TTL-compatible macrocell array and suggests a possible package.
Motorola Semiconductor AN-927 (12pp)

18 **“VL1000 User’s Guide”**
(VL1000)
Provides details on the VL1000 linear bipolar cell library.
VL1000 User’s Guide (123pp)

19 **“VL2000 User’s Guide”**
(VL2000)
Gives complete details on a high-performance bipolar digital cell library.
VL2000 User’s Guide

SEMICUSTOM/CUSTOM

Programmable Logic

1 **"Ultra-High Speed (15ns Max.) PAL Solves Speed Problem"**
(PAL16L8B, PAL16R4B, PAL16R6B, PAL16R8B)
Describes how a few high-speed programmable logic devices can replace many advanced Schottky TTL SSS/MSI chips. Includes the design of a dual-port RAM arbiter/controller using two of the devices.
National Semiconductor AN-398 (18pp)

PACKAGING

General

1 **"An Applications Guide to 64-Pin/50-Mil-Center Packaging"**
(F945X)
Details on the 64-pin, 50-mil-center DIP used for the F945X family of microprocessors and on applicable sockets.
Fairchild MC-3 (6pp)

2 **"ESD Prevention Manual"**
A primer on protecting ICs from electrostatic discharge, covering such topics as protective bags, cushioning materials, floor surfaces, clothing, and footwear.
Analog Devices AN-E826-5-3/84 (35pp)

3 **"Electrostatic Discharge Control: A Guide to Handling Integrated Circuits"**
Covers methods and materials recommended for protection of ICs against ESD damage or degradation during manufacturing operations vulnerable to ESD exposure.
Harris TB-52 (5pp)

4 **"High-Density Leadless Chip Carrier Packages Increase Reliability, Save Weight"**
(80C86)
An introduction to leadless chip carriers and their advantages in terms of operating temperature, size, and weight.
Harris CMOS Military Applications p. 15 (7pp)

5 **"Introduction to Surface Mounting"**
Describes and discusses leaded chip carriers and related design and assembly topics.
Texas Instruments SMFA001 (9pp)

6 **"SO Package Tape and Reel"**
Basic information on tape and reel packaging for SO-packaged ICs.
Signetics AN-210 (4pp)

Last Page This Section. Next Page 501.

IC MASTER BELONGS ON YOUR BOOKSHELF

If you don't have your own IC MASTER, you can obtain your own copy by ordering now. Write for your own copy or order by telephone as described below.

IC MASTER is a two-volume set of technical data carefully organized to direct the engineer to the integrated circuits and related products that are closest to his specific needs. It is the surest way to find the optimum device to answer an engineering design requirement. By ordering now, you won't have to borrow or search for IC MASTER the next time you need it.

Typical Use of IC MASTER

Can an engineer find out who makes a 256K dynamic RAM with an access time of 120 nanoseconds or faster in less than 30 seconds?
He can if he turns to the Memory section of IC MASTER and looks for the 256K organization (words and bits per word) that he needs.
Because each device is listed in order of access time, he can easily determine the devices that satisfy his speed requirements.

In the United States only:

You can order IC MASTER simply by charging it to your VISA or Master Card credit card. To place your order (USA only) call now: (408) 249-6800/ (516) 227-1300. To order outside the USA, see list of authorized IC MASTER distributors on page 1471 of Vol. I.

ORDER YOUR COPY NOW

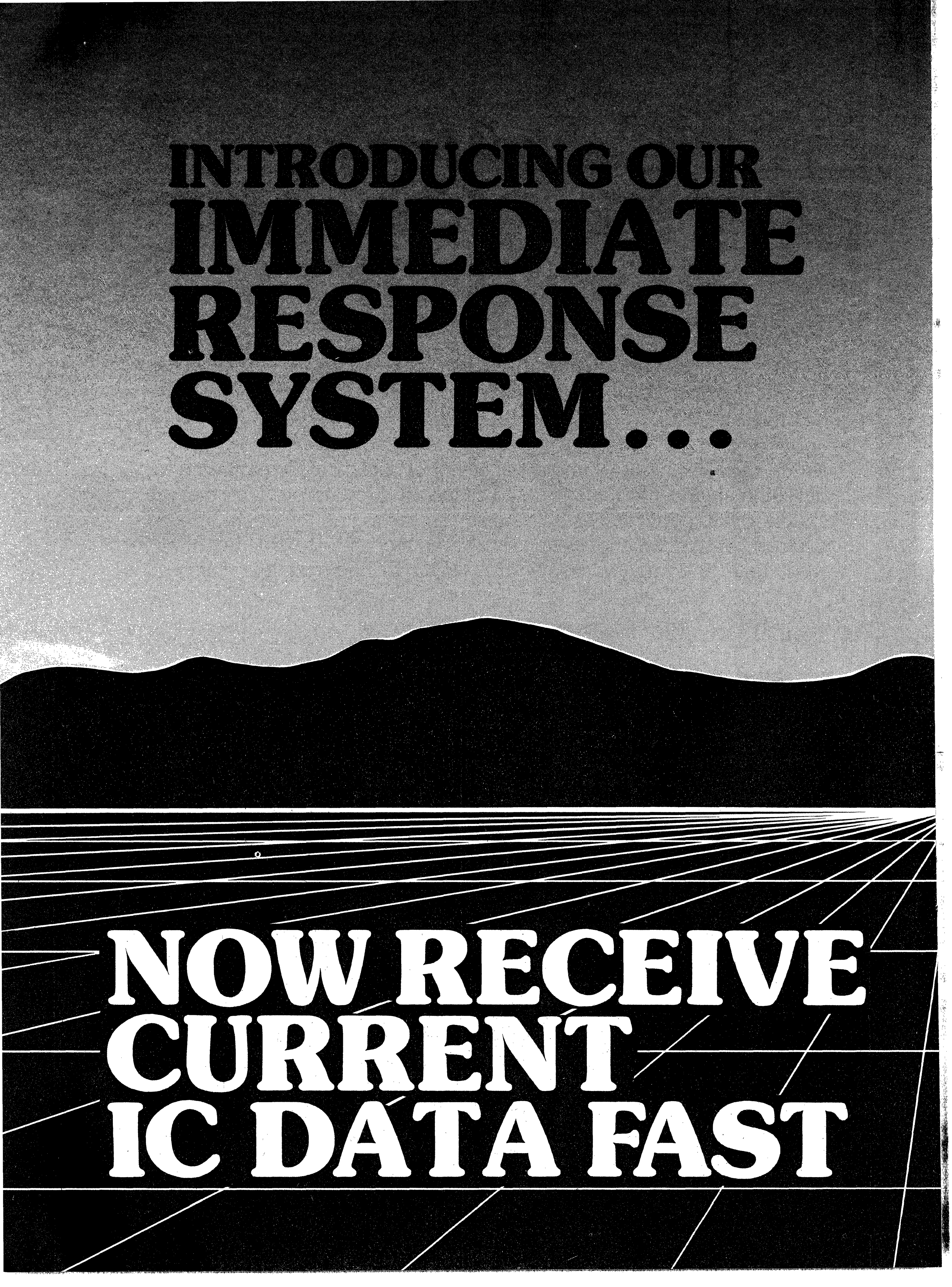
INTRODUCING OUR
IMMEDIATE
RESPONSE
SYSTEM...
NOW RECEIVE
CURRENT
IC DATA FAST

19[illegible]

Dear IC MASTER User:

ANNOUNCING . . . A **new,** innovative way to request and receive up-to-date IC product data.

The IC MASTER introduces an IMMEDIATE response system. Operational **24 hours a day, 7 days a week,** you can now phone in your requests for the most current IC product data available from IC manufacturers who have product data sheets in the IC MASTER, at no cost to you. Here's all you do:

Step 1 **Phone 800-443-0100** and ask for Extention #518

Step 2 When asked, simply tell the operator the name(s) of the manufacturer whose part you are interested in . . . the **specific** part number you want information on . . . if you want a data sheet and/or an application note . . . and if you want a salesperson to call.

Step 3 Provide you name, title, company, address, and phone number.

That's all you do! We do the rest. Your request will be in the hands of the company you inquired about within 24 hours.

We will follow up within a week to make sure your request was expedited and your needs were met.

It's important to us that we provide you with the best source of up-to-date IC product data available in the market . . . we've been doing it for over ten years, and we aren't stopping now.

We hope this **added new** service will contribute to a further reduction in your IC selection time.

call 800-443-0100 518 (ext.)

WHAT'S NEW IN IC Updates

IF YOU NEED THE IC MASTER YOU NEED THE IC UPDATES

Not only will the IC UPDATES update your IC Master Catalog they will provide valuable IC application and selection information in every issue.

SPRING, SUMMER and FALL

and remember our toll free number for up-to-date product information: **800 443-0100 (EXT.) 518**

MILITARY PARTS DIRECTORY

This section is divided into three parts: a table of those manufacturers willing to perform MIL-STD-883 screening, a two-way military to commercial cross reference index, and the Qualified Parts List broken down into functions. It not only shows what devices are on the list and which manufacturers supply them, but also it decodes the military numbers into familiar terms.

Detailed Product Information provided by:

Circuit Technology Inc.	601
Fairchild	603
Harris	624
Hughes Aircraft	683
Inmos	685
Micro Power Systems	688
Monolithic Memories	689
Mostek	694
Motorola	696
Raytheon	700
RCA Solid State	702
Texas Instruments	707
Xicor	734

The manufacturers listed above have provided detailed information on their latest and most significant products.

HOW TO USE THE MILITARY PARTS DIRECTORY

The following Military Device Testing table shows the manufacturers who have advised that they want to screen devices to MIL-STD-883 and/or perform other environmental screening. The table also indicates which companies are currently qualified to supply one or more devices on the QPL list. Such achievement is apt to indicate that these companies are well equipped to perform 883 testing. The Military Parts Index provides convenient cross equivalents; plus indication of which devices are listed in the latest QPL.

The heart of this section is the Military Parts Directory, which is a functional QPL parts list. It is based on the latest Defense Electronics Supply Center Qualified Products List (QPL-38510-XX) at the time of publication. The revision and date of this list are indicated at the bottom of each page. The devices are identified by major functions; within each function the devices are arranged in alphanumeric order, which automatically groups CMOS together, 5400 Series together, etc.

A complete military part number includes a three letter suffix signifying the device class and packaging. The definitions of these letters are given in the Part Number Guide under "JAN Nomenclature." The package styles and lead finishes that each manufacturer is qualified to supply can be determined by consulting the official QPL or by contacting the individual manufacturers. Once you have found the names of the companies you need to contact, you can reach them by using the information in the Manufacturers and Distributors Directory.

VERZEICHNIS MILITÄRISCHER ICs

Dieser Abschnitt besteht aus drei Teilen: einem Verzeichnis de Hersteller, welche eine Prüfung nach Mil-Standard 883 vornehmen, eine sowohl militärische als auch kommerzielle Äquivalenzliste und die QPL-Listung nach Funktionen. Hier wird nicht nur genannt, welche Bauelemente verfügbar sind und wer sie liefert, sondern es werden au*β*erdem militärische Typennummern in allgemeinverständliche umgeschlüsselt.

GEBRAUCHSANLEITUNG FÜR DAS VERZEICHNIS MILITÄRISCHER ICs

Die nächste Seite enthält eine Liste jener Hersteller, dia eine Prüfung nach MIL-Standard 883 vornehmen und/oder andere Tests für verschärfte Umweltbedingungen durchführen. Die Liste zeigt au*β*erdem, welche Firmen gegenwärtig für die Lieferung von einem oder mehreren Bauteilen nach QPL qualifiziert sind. Eine solche Qualifikation ist ein Hinweis darauf, da*β* diese Firmen für eine Prüfung nach 883 gut ausgerüstet sind. Die folgenden vier Seiten enthalten praktische Äquivalenzlisten von M38510-Nummern zu deren kommerziellen Bezeichnungen mit einem Hinweis darauf, welche Bauteile in der neuesten QPL-Listung aufgeführt sind.

Das Kernstück dieses Abschnitts ist die QPL-Liste nach Funktionen. Sie basiert auf der neuesten Defense Electronics Supply Center Qualified Products List (QPL-385 10-XX) zum Zeitpunkt der Drucklegung. Die Ausgabe und das Datum dieser Liste werden am Ende jeder Seite angegeben. Die Bauteile sind nach den wichtigsten Funktionen geordnet. Innerhalb jeder Funktion werden sie in alphanumerischer Reihenfolge aufgeführt, so da*β* automatisch CMOS zusammen sind, 5400 Serien zusammen sind usw.

Eine Vollstandige Militärische Typennummer umfast ein Suffix von drei Bruchstaben, welche die Klassifizierung und Gehäuseform des Bauelements bedeuten. Diese Buchstaben werden im Numerischen Typenverzeichnis unter "JAN Nomenclature" erläutert. Die Gehäuseformen und Ausführung der Anschlüsse, die jeder Hersteller liefern darf, können über die offizielle QPL-Listung oder über die einzelnen Hersteller in Erfahrung gebracht werden. Haben Sie einmal die Namen der Firmen gefunden, die Sie brauchen, können Sie weitere Informationen über das Hersteller- und Distributoren-verzeichnis erhalten.

CATALOGUE DES PIECES MILITAIRES

Cette section est divisée en trois catégories : un tableau des fabricants se conformant à la méthode MIL-STD-883, un index de référence entre le domaine militaire et le domaine industriel, et une liste par fonction des pièces qualifiées (QPL). Non seulement les appareils figurant sur la liste et les noms de leurs fabricants sont indiqués, mais les numéros des pièces militaires sont décodés en des termes plus compréhensibles pour les industriels.

COMMENT SE SERVIR DU CATALOGUE DES PIECES MILITAIRES

La page suivante offre un tableau donnant les noms des fabricants désireux de sélectionner des appareils suivant la méthode MIL-STD-883, ou d'exécuter d'autres tests d'environnement. Ce tableau énumère également les sociétés actuellement qualifiées pour produire un ou plusieurs appareils figurant sur la Liste de Pièces Militaires (QPL). Il est sous-entendu que ces sociétés possèdent l'equipement nécessaire pour accomplir les tests éxigés par la méthode 883. Les quatre pages suivantes fournissent un index pratique de référence entre les numéros de la méthode M38510 et leurs équivalents industriels, ainsi que la liste des appareils figurant sur la QPL la plus récente.

Le coeur de cette section est la Liste des Pièces Qualifiées. Elle est basée sur l'edition las plus recente de la QPL publiée par le "Defense Electronics Supply Center" lors de la publication de ce catalogue (QPL-38510-XX). Le numéro et la date de révision de cette liste sont indiqués au bas de chaque page. Les appareils sont identifiés par fonctions principales. Dans chaque fonction les appareils sont indiqués par ordre alphanumérique, ce qui regroupe automatiquement les CMOS ensemble, les séries 5400 ensemble, etc. . .

Un numéro complet de pièce militaire comprend un suffixe de trois lettres qui détermine lat catégorie de l'appareil et le type de boitier utilisé. La définition de ces lettres est fournie dans le Guide des Numéros de Pièces (Part Number Guide) sous la nomenclature JAN. Les types de boitier et de finition que chaque fabricant est qualifié de produire, peuvent être déterminés en consultant la QPL officielle ou en contactant les fabricants respectifs. Une fois que vous connaissez les noms des sociétés que vous desirez contacter, vous pourrez en obtenir les adresses et numéros de téléphone en consultant l'Annuaire des Fabricants et Distributeurs (Manufacturers and Distributors Directory).

DIRECTORIO DE PARTES PARA USO MILITAR

Esta sección está dividada en tres partes: Una tabla de aquellos fabricantes que seleccionan componentes de acuerdo a la ESPECIFICATIÓN MILITAR-883*, un índice de referencia entre componentes militares y comerciales, y una Lista de partes subdividida en funciones. No solo muestra que componentes forman parte de la lista y que fabricantes la proveen, sino también traduce los números militares a términos familiares.

MODO DE EMPLEO DEL DIRECTORIO DE PARTES PARA USO MILITAR

La siguiente página contiene una tabla de fabricantes que desean seleccionar partes de acuerdo a la ESPECIFICACION MILITAR-883 y/o ejecutar otro tipo de segregación ambiental. La tabla también indica que compañías están calificadas para proveer una o más componentes en la lista QPL. Esta proeza es un indicio que dichas compañías están equipadas para ejecutar la prueba 883. Las siguientes cuatro páginas proveen referencias convenientes entre los números M3851 y sus equivalentes comerciales, además indica que componentes aparecen en la lista más reciente de QPL.

La importancia de esta sección está en la lista funcional de componentes QPL. Está basada en la lista de productos del Centro de Abastecimiento de Defensa Electronica más reciente (QPL-38510-XX) antes de su publicación. La revisión y fecha de esta lista aparecen al pie de cada página. Las componentes están identificadas de acuerdo a funciones; que a su vez están organizadas en ordén alfabético-numérico, que automáticamente agrupa las familias CMOS, 5400, etc.

La numeración completa de una componente militar incluye un sufijo de tres letras alfabéticas que determinan la clase y estilo constructivo de la componente. Las definiciones de estas letras se encuentran en la Guía de Numero de Pieza bajo "nomenclatura JAN." El estilo constructivo y acabado de las terminales que cada fabricante suple puede ser determinado consultando el QPL oficial o comunicándose con los fabricantes mismos. Después de haber averiguado los nombres de las compañías a las que deberá dirigirse, puede ponerse en contacto con ellos por medio del Directorio de Fabricantes y Distribuidores.

ミリタリー用部品録

このセクションは次の３部門に分れています。(1)ＭＩＬ-ＳＴＤ-８８３のスクリーニングをするメーカー表，(2)一般型名からミリタリー番号を，ミリタリー番号から一般型名を探し出すクロスリファレンス表，(3)機能別に分類された認定部品表，これは部品名丈でなくそのメーカー名とミリタリー番号のなじみの深い用語への対応も網羅しています。

使用方法

次ページにはＭＩＬ-ＳＴＤ-８８３並に他のスクリーニングをするメーカー名が記載されています。その表にはどのメーカーが現在ＱＰＬ（認定部品表）上のどんな製品の供給に認定されているかも示していますから，記載されているメーカーが８８３による試験設備を備えているかどうか判断することも出来ます。その後の４ページはミリタリーから一般型名，一般型名からミリタリーのクロスリファレンスで最新のＱＰＬに記載されている型名も分ります。

このセクションの最も大切な所は機能別ＱＰＬ部品リストです。これは本マスター発行時点で最新の国防省電子部品供給センター（ＤＥＳＣＥ）認定品リスト（ＱＰＬ-３８５１０-××）に基くものです。本リストの改定又は日付は各ページの下欄に示されています。デバイスは主要機能毎に記載されています。その機能毎にデバイスはアルファベット順にのっていますのでＣＭＯＳはＣＭＯＳ内に，５４００シリーズは５４００シリーズ内にまとめられています。

ミリタリー部品番号はデバイスのクラス分けパッケージ分けを示す３文字のサフィックスを入れています。この３文字の規定はパーツナンバーガイドのＪＡＮノーメンクラチュアに記載されています。各メーカーが認定されているパッケージ形状とリード仕上げは公式のＱＰＬを見るか個々のメーカーに連絡して下さい。連絡先の住所，電話番号等は〝メーカー，代理店ダイレクトリー〞にのせてあります。

MILITARY DEVICE TESTING

	MIL-M-38510 QPL				MIL-STD-883 SCREENING		OTHER SCREENING	
MANUFACTURER	**Linear**	**TTL**	**Other Bipolar**	**CMOS**	**Class B**	**Class S**	**Military**	**Industrial**
Advanced Micro Devices	X	X	X		X	X	X	X
Altera					X		X	X
Analog Devices	X		X	X	X		X	X
Analog Systems					X		X	X
Apex Microtechnology					X		X	X
Burr-Brown					X	limited	X	X
California Devices					X	limited	X	X
Cherry Semiconductor							X	X
Circuit Technology Inc.					X	X	X	X
Comlinear					X	limited	X	X
Cybernetic Micro Systems					X			
Cypress Semiconductor					X		X	
Datel					X	X	X	X
Dumont Alphatron				X	X		X	X
EG&G Reticon					X		X	X
Elantec					X	X	X	X
EXEL Microelectronics					X		X	X
Fairchild Semiconductor	X	X	X		X	X	X	X
Ferranti Interdesign					X		X	X
Fujitsu Microelectronics					X		X	X
General Instrument					X	X	X	X
Gould AMI					X	limited	X	X
Harris Semiconductor	X			X	X	X	X	X
Holt					X	X	X	X
Honeywell Signal Processing Technologies							X	X
Hughes Aircraft					X	X	X	X
Hybrid Systems					X	X	X	X
Hycomp					X	X	X	X
ILC - Data Device					X	X	X	X
Inmos					X		X	X
Intech					X		X	X
Integrated Device Technology					X	X	X	X
Integrated Logic Systems Inc.					X		X	X
Integrated Power Semicoductors					X		X	X
Intel			µP		X		X	X
International Microcircuits					X	limited	X	X
International Microelectronic Products					X		X	X
Intersil	X		Analog Switches		X	X	X	X
Intronics					X		X	X
Linear Technology Corp.	X				X		X	X
LSI Computer Systems					X	X	X	X
LSI Logic					X		X	X
Micrel					X		X	X
Micro Networks					X	X	X	X
Micropac					X		X	X
Micro Power Systems					X	X	X	X
Micro Sciences				X	X		X	X

MILITARY DEVICE TESTING

MANUFACTURER	MIL-M-38510 QPL				MIL-STD-883 SCREENING		OTHER SCREENING	
	Linear	TTL	Other Bipolar	CMOS	Class B	Class S	Military	Industrial
Micron Technology							X	
Mitel Semiconductor					X			
Monolithic Memories		X	PROM		X	X	X	X
Mostek					X		X	X
Motorola Semicondctor	X	X	ECL, μP	X	X	X	X	X
National Semicoductor	X	X	X	X	X	X	X	X
NCM Corporation				X	X		X	X
NCR Microelectronics					X		X	X
NEC Electronics					X			X
OEI	X		X		X		X	X
Plessey Solid State					X	X		
Precision Monolithics	X		DAC	X	X	X	X	X
Raytheon Semiconductor	X	X	X	X	X	X	X	X
RCA Solid State				X	X	X	X	X
Rockwell					X		X	X
Seeq					X			
SGS Semiconductor					X	X	X	X
Signetics	X	X	PROM		X	X	X	X
Silicon General					X	X	X	X
Siliconix			Analog Switches		X	X	X	X
Solitron					X	X	X	X
Sprague Electric					X		X	X
Sprague Solid State				X			X	X
Standard Microsystems Corp.					X	X	X	X
Supertex					X		X	X
Technitrol					X		X	X
Teledyne Crystalonics					X	X	X	X
Teledyne Philbrick					X	X	X	X
Teledyne Semiconductor					X			X
Texas Instruments	X	X	RAM		X	X	X	X
TLSI					X		X	X
TRW LSI					X		X	X
Unitrode Corp.					X	limited	X	X
Universal Semiconductor					X		X	X
Weitek					X	X	X	X
Xicor					X		X	X
Zilog					X		X	X

EXPLANATION:

The "MIL-M-38510" section indicates the IC manufacturers currently providing Q.P.L. ICs. More detailed information on the specific devices is given in the Qualified Products lists which follow.

The "MIL-STD-883 Screening" section lists those manufacturers who are both set up and actively want to screen devices to the levels indicated. "Other Screening" shows those who report that they want business calling for special military and industrial environmental screening procedures.

MILITARY PARTS–CROSS REFERENCE

Commerical to Military

Device	M38510/	QPL	LINE
061	11901		
062	11902		
064	11903		
071	11904		
072	11905		5
074	11906		
1020	12705		
10501	06001	X	
10502	06002	X	
10504	06201	X	10
10505	06003	X	
10506	06004	X	
10507	06005	X	
10509	06006	X	
10524	06301	X	15
10525	06302	X	
10531	06101	X	
10535	06104	X	
10576	06103	X	
10597	06202	X	20
10631	06102	X	
1218	12707		
1220	12706		
1524	12601		
1558	10108	X	25
1802	47001		
1821	47101		
1822	47102		
1832	47201		
1852	47301		30
1853	47401		
1856	47601		
1857	47602		
200	12301		
201	12302	X	35
2114	23802		
2114A	23804		
2117 (200 ns)	24001		
2117 (250 ns)	24002		
2147	23801	X	40
2147H	23803	X	
2147H-2	23807	X	
2147H-3	23805	X	
2148H	23806	X	
2164 (1 ms ref)	24401		45
2164 (2 ms ref)	24402		
2316E	40301		
2516	22101		
2532	22201		
25LS174	33106	X	50
25LS175	33107	X	
2616	40301		
2708	22001		
2716	22101		
2732	22201		55
27S181	20904	X	
2901A	44001		
2905	44101		
2906	44102		
2907	44103		60
2909	44301		
2910	44501		
2914	44401		
2915	44104		
2916	44105		65
2917	44106		
2918	44201		
29631	20904	X	
29651	20902	X	
29681	21002	X	70
3018A	10801		
3045	10802	X	
3516F	40301		
3636	21002		
4000A	05201	X	75
4000B	05251		
4001A	05202	X	
4001B	05252	X	
4002A	05203	X	
4002B	05253	X	80
4006A	05701	X	
4006B	05751		
4007A	05301	X	
4007UB	05351	X	
4008A	05401	X	85
4008B	05451		
4009A	05501	X	
4009UB	05551		
40100B	17902		
40102B	18101		90
40103B	18102		
40104B	17903		
40105B	17904		
40106B	17702		
40107B	17402		95
40108B	17905		
40109B	17404		
4010A	05502	X	
4010B	05552		
4011A	05001	X	100
4011B	05051	X	
4012A	05002	X	
4012B	05052	X	
4013A	05101	X	
4013B	05151	X	105
4014A	05702	X	
4014B	05752	X	
4015A	05703	X	
4015B	05753		
40160B	18001		110
40161B	18002		
40162B	18003		
40163B	18004		
4016A	05801	X	
4016B	05851		115
40174B	17505		
4017A	05601	X	
4017B	05651	X	
4018A	05602	X	
4018B	05652	X	120
40192B	18103		
40193B	18104		
40194B	17906		
4019A	05302	X	
4019B	05352	X	125
40208B	17907		
4020A	05603	X	
4020B	05653	X	
4021A	05704	X	
4021B	05754		130
4022A	05604	X	
4022B	05654		
4023A	05003	X	
4023B	05053	X	
4024A	05605	X	135
4024B	05655	X	
40257B	17803		
4025A	05204	X	
4025B	05254	X	
4027A	05102	X	140
4027B	05152	X	
4028A	05901		
4028B	05951		
4030A	05303	X	
4030B	05353	X	145
4031A	05705	X	
4034A	05706		
4034B	05756	X	
4041A	05505		
4041UB	05555		150
4043A	05103	X	
4043B	05153		
4048A	05304		
4048B	05354		
4049A	05503	X	155
4049B	05553		
4049UB	05553	X	
4050A	05504	X	
4050B	05554	X	
4066A	05802	X	160
4066B	05852		
4067B	17801		
4069UB	17401	X	
4070B	17203	X	
4071B	17101	X	165
4072B	17102	X	
4073B	17003	X	
4075B	17103	X	
4076B	17501		
4077B	17204	X	170
4081B	17001	X	
4082B	17002	X	
4085B	17201	X	
4086B	17202	X	
4093B	17701		175
4094B	17901		
4095B	17502		
4096B	17503		
4097B	17802		
4098B	17504	X	180
4099B	17601	X	
4116 (200 ns)	24001	X	
4116 (250 ns)	24002	X	
4136	11004	X	
4156	11003	X	185
4502B	17403	X	
4508B	17602		
4510B	18105		
4514B	17301		
4515B	17302		190
4516B	18106		
4518B	18107		
4520B	18108		
4532B	17303		
4555B	17304		195
4556B	17305		
4564 (1 ms ref)	24401		
4564 (2 ms ref)	24402	X	
5040	10501		
5041	10502		200
5042	10503		
5043	10504		
5044	10505		
5045	10506		
5046	10507		205
5047	10508		
506	19001	X	
506A	19002		
507	19003	X	
507A	19004		210
508	19007		
508A	19005		
509	19008	X	
509A	19006		
5200	12001		215
5201	12003		
5202	12005		
5203	12002		
5204	12004		
5205	12006		220
5206	12007		
5207	12008		
5210	12009		
5211	12011		
52116	40301		225
5212	12013		
5213	12010		
5214	12012		
5215	12014		
5216	12015		230
5217	12016		
5300-1	20301		
5301-1	20302	X	
5305-1	20401		
5306-1	20402		235
532S	13903		
5330	20701		
5331	20702		
5340-1	20801		
5341-1	20802		240
5348-1	20804		
5349-1	20805		
534S	13902		
534T	13901		
5352-1	20601		245
5353-1	20602	X	
5380-1	20903		
5381-2	20904		
53S1680	21001		
53S1681	21002		250
53S840	20907		
53S841	20908	X	
5400	00104	X	
5401	00107	X	
5402	00401	X	255
5403	00109	X	
5404	00105	X	
5405	00108	X	
5406	00801	X	
5407	00803	X	260
5408	01601	X	
5409	01602	X	
5410	00103	X	
54107	00203	X	
54116	01503		265
5412	00106	X	
54120	15401		
54121	01201	X	
54122	01202	X	
54123	01203	X	270
54125	15301		
54126	15302	X	
5413	15101	X	
54132	15103	X	
5414	15102	X	275
54145	01005		
54147	15601		
54148	15602		
54150	01401	X	
54151	01406	X	280
54153	01403	X	
54154	15201		
54155	15202	X	
54156	15203	X	
54157	01405	X	285
5416	00802	X	
54160	01303	X	
54161	01306	X	
54163	01304	X	
54164	00903	X	290
54165	00904	X	

NOTE: Items marked X in the QPL column are listed on QPL-38510-65 with at least one source. * 80°C Max. † 100°C Max.

MILITARY PARTS–CROSS REFERENCE (Cont'd)

Commerical to Military (Cont'd)

Device	M38510/	QPL	LINE
54166	00910		
5417	00804	X	
54170	01801		
54173	01703		
54174	01701	X	5
54175	01702	X	
54180	01901	X	
54181	01101	X	
54182	01102		
54186	20101		10
54192	01308		
54193	01309	X	
54194	00905	X	
54195	00906	X	
54196	01310		15
54198	00909		
5420	00102	X	
5423	00402	X	
5425	00403	X	
5426	00805	X	20
5427	00404	X	
5428	16201		
5430	00101	X	
5432	16101	X	
54365	16301	X	25
54366	16302		
54367	16303	X	
54368	16304	X	
5437	00302	X	
5438	00303	X	30
5442	01001	X	
5443	01002		
5444	01003		
5445	01004	X	
5446	01006	X	35
5447	01007	X	
5448	01008	X	
5449	01009		
5450	00501	X	
5451	00502	X	40
5453	00503	X	
5454	00504	X	
5470	00206	X	
5472	00201	X	
5473	00202	X	45
5474	00205	X	
5475	01501	X	
5476	00204	X	
5477	01502		
5479	00207		50
5480	00604		
5482	00601	X	
5483	00602	X	
5485	15001	X	
5486	00701	X	55
5490	01307	X	
5492	01301	X	
5493	01302	X	
5495	00901	X	
5496	00902	X	60
54ALS00	37001	X	
54ALS02	37301	X	
54ALS04	37006	X	
54ALS08	37401	X	
54ALS10	37002	X	65
54ALS1000	38401	X	
54ALS1002	38402	X	
54ALS1003	38403		
54ALS1004	38409		
54ALS1005	38410		70
54ALS1008	38404		
54ALS1010	38405		
54ALS1011	38406		
54ALS1020	38407	X	
54ALS1032	38408		75
54ALS1034	38411	X	
54ALS1035	38412		
54ALS109	37102	X	
54ALS11	37402	X	
54ALS112A	37103	X	80
54ALS133	37005	X	
54ALS138	37701	X	
54ALS160	38101		
54ALS161	38001		
54ALS162	38102		85
54ALS163	38002		
54ALS168	38103		
54ALS169	38003		
54ALS174	37201		
54ALS175	37202	X	90
54ALS20	37003	X	
54ALS240A	38301	X	
54ALS241A	38302	X	
54ALS242	38506		
54ALS243	38507		95
54ALS244A	38303	X	
54ALS27	37302	X	
54ALS28	38402	X	
54ALS299	37601		
54ALS30	37004	X	100
54ALS32	37501	X	
54ALS323	37602		
54ALS37	38401	X	
54ALS373	37203		
54ALS374	37204		105
54ALS40	38407	X	
54ALS560	38104		
54ALS561	38004		
54ALS568	38105		
54ALS569	38005		110
54ALS573	38201		
54ALS574	37104		
54ALS576	37105		
54ALS580	38202		
54ALS640	38501		115
54ALS641	38502		
54ALS642	38503		
54ALS643	38504		
54ALS645	38505		
54ALS74	37101	X	120
54ALS857	37901	X	
54ALS873	38203		
54ALS874	37106		
54ALS876	37107		
54ALS880	38204		125
54C929	23901		
54C930	23902		
54F00	33001	X	
54F02	33301	X	
54F04	33002	X	130
54F08	34001	X	
54F10	33003	X	
54F109	34102	X	
54F11	34002	X	
54F112	34103		135
54F138	33701	X	
54F139	33702	X	
54F151	33901		
54F153	33902		
54F157	33903		140
54F158	33904		
54F174	34101	X	
54F175	34104	X	
54F194	33601		
54F20	33004	X	145
54F240	33201	X	
54F241	33202	X	
54F242	34801		
54F243	34802		
54F244	33203	X	150
54F245	34803		
54F251	33905		
54F253	33908	X	
54F257	33906		
54F258	33907		155
54F280	34901	X	
54F283	34201		
54F32	33501	X	
54F352	33909	X	
54F353	33910	X	160
54F373	34601	X	
54F374	34105	X	
54F533	34602		
54F534	34106		
54F64	33401	X	165
54F86	34501		
54H00	02304	X	
54H01	02306	X	
54H04	02305	X	
54H08	15501	X	170
54H08*2	15504		
54H10	02303	X	
54H101	02205	X	
54H103	02206	X	
54H11	15502	X	175
54H20	02302	X	
54H21	15503	X	
54H22	02307		
54H30	02301	X	
54H40	02401	X	180
54H50	04001	X	
54H51	04002	X	
54H53	04003		
54H54	04004		
54H55	04005	X	185
54H72	02201	X	
54H73	02202		
54H74	02203		
54H76	02204	X	
54L00	02004	X	190
54L01	02006	X	
54L02	02701	X	
54L03	02006	X	
54L04	02005	X	
54L10	02003	X	195
54L121	04201		
54L122	04202		
54L164	02802		
54L193	02503		
54L20	02002	X	200
54L30	02001	X	
54L42	02901		
54L43	02902		
54L44	02903		
54L46	02904		205
54L47	02905		
54L51	04101		
54L54	04102		
54L55	04103		
54L71	02101	X	210
54L72	02102	X	
54L73	02103	X	
54L74	02105	X	
54L78	02104	X	
54L86	02601	X	215
54L90	02501	X	
54L91	02806		
54L93	02502	X	
54L95	02801	X	
54LS132	31303	X	220
54LS00	30001	X	
54LS02	30301	X	
54LS03	30002	X	
54LS04	30003	X	
54LS05	30004	X	225
54LS08	31004	X	
54LS09	31005	X	
54LS10	30005	X	
54LS107	30108	X	
54LS109	30109	X	230
54LS11	31001	X	
54LS112	30103	X	
54LS113	30104	X	
54LS114	30105	X	
54LS12	30006	X	235
54LS122	31403	X	
54LS123	31401	X	
54LS124	31701		
54LS125	32301	X	
54LS126	32302	X	240
54LS13	31301	X	
54LS138	30701	X	
54LS139	30702	X	
54LS14	31302	X	
54LS148	36001	X	245
54LS15	31002	X	
54LS151	30901	X	
54LS153	30902	X	
54LS155	32601	X	
54LS156	32602	X	250
54LS157	30903	X	
54LS158	30904	X	
54LS160A	31503	X	
54LS161A	31504	X	
54LS162A	31511	X	255
54LS163A	31512	X	
54LS164	30605	X	
54LS165A	30608	X	
54LS166	30609	X	
54LS168	31505		260
54LS169A	31506	X	
54LS170	31902	X	
54LS173A	36101	X	
54LS174	30106	X	
54LS175	30107	X	265
54LS181	30801	X	
54LS190	31513	X	
54LS191	31509	X	
54LS192	31507	X	
54LS193	31508	X	270
54LS194A	30601	X	
54LS195A	30602	X	
54LS195B	30603	X	
54LS196	32001	X	
54LS197	32002	X	275
54LS20	30007	X	
54LS21	31003	X	
54LS22	30008	X	
54LS221	31402	X	
54LS240	32401	X	280
54LS241	32402	X	
54LS242	32801	X	
54LS243	32802	X	
54LS244	32403	X	
54LS245	32803	X	285
54LS251	30905	X	
54LS253	30908	X	
54LS257	30906	X	
54LS258	30907	X	

NOTE: Items marked X in the QPL column are listed on QPL-38510-65 with at least one source. * 80°C Max. † 100°C Max.

MILITARY PARTS–CROSS REFERENCE (Cont'd)

Device	M38510/	QPL	LINE	Device	M38510/	QPL	LINE	Device	M38510/	QPL	LINE	Device	M38510/	QPL	LINE
Commerical to Military				54S08	08003	X		562 (2 µA)	12101	X		8251	15205		
(Cont'd)				54S09	08004	X		562 (5 µA)	12102		145	8252	15206		
				54S10	07005	X		563	12102			8264 (1 ms ref)	24401		
54LS259	31603	X		54S11	08001	X		565	12103			8264 (2 ms ref)	24402		220
54LS259B	31605	X		54S112	07102	X	75	584S	12801			82S10	23101		
54LS26	32102	X		54S113	07103	X		584T	12802			82S100	50202		
54LS261	31801			54S114	07104	X		6108	19007	X	150	82S101	50201		
54LS266	30303	X	5	54S133	07009	X		6116	19001			82S10 (45 ns)	23107		
54LS27	30302	X		54S134	07010			6208	19008			82S11	23102		225
54LS273	32501	X		54S135	07502		80	6216	19003			82S115	20803	X	
54LS279	31602	X		54S138	07701	X		64162	01305	X		82S11 (45 ns)	23108		
54LS28	30204	X		54S139	07702	X		6508	23901		155	82S123	20702	X	
54LS280	32901	X	10	54S140	08101	X		6518	23902			82S126	20301	X	
54LS283	31202	X		54S15	08002			6654	21901			82S129	20302	X	230
54LS290	32003	X		54S151	07901	X	85	6665 (1 ms ref)	24401			82S130	20401	X	
54LS293	32004	X		54S153	07902	X		6665 (2 ms ref)	24402			82S131	20402	X	
54LS295B	30606	X		54S157	07903	X		6800	40001		160	82S136	20601		
54LS298	30909	X	15	54S158	07904	X		6810	40201			82S137	20602	X	
54LS30	30009	X		54S174	07105	X		68316B	40301			82S140	20801		235
54LS32	30501	X		54S175	07106	X	90	6831B	40302			82S141	20802	X	
54LS324	31702			54S181	07801	X		68A316E	40301			82S180	20903		
54LS348	36002	X		54S182	07802	X		710	10301	X	165	82S181	20904	X	
54LS363	32505		20	54S194	07601	X		711	10302			82S184	20901		
54LS365	32201	X		54S195	07602			714	13502			82S185	20902	X	240
54LS366	32202	X		54S20	07006	X	95	723	10201			82S190	21001		
54LS367	32203	X		54S22	07007	X		741	10101	X		82S191	21002	X	
54LS368	32204	X		54S251	07905			747	10102	X	170	82S23	20701	X	
54LS37	30202	X	25	54S253	07908	X		7520	12702			82S2708	20905	X	
54LS373	32502	X		54S257	07906	X		7521	12703			9093	03304		245
54LS374	32503	X		54S258	07907		100	7523	12701			9218	40301		
54LS375	31604	X		54S280	07703			7541	12704	X		930	03001	X	
54LS377	32504	X		54S287	20302	X		7620-8	20501		175	9300	15901		
54LS38	30203	X	30	54S288	20702	X		7621-8	20502			9301	15206	X	
54LS390	32701	X		54S30	07008	X		76L42A	02906			9304	00603		250
54LS393	32702	X		54S40	07201	X	105	76L70	02805			9308	01503		
54LS395B	30607	X		54S412	42101			771	11904	X		9309	01404	X	
54LS40	30201	X		54S474	20802	X		772	11905	X	180	9311	15201	X	
54LS42	30703	X	35	54S51	07401	X		774	11906			9312	01402	X	
54LS424	42201			54S571	20402	X		77S181	20904	X		9314	01504	X	255
54LS428	42301			54S573	20601	X	110	77S185	20902	X		9317	15802		
54LS47	30704	X		54S64	07402	X		77S191	21002	X		9318	15603	X	
54LS490	32703	X		54S65	07403	X		7805	10706	X	185	932	03101		
54LS51	30401	X	40	54S74	07101	X		7812	10707	X		9321	15801		
54LS54	30402	X		54S85	08201	X		7815	10708	X		9322	01405	X	260
54LS624	31704			54S86	07501	X	115	7820	10408			9324	15002	X	
54LS629	31703			55107	10401	X		7824	10709	X		9328	15902	X	
54LS640	32804			55108	10402	X		7830	10409		190	933	03105		
54LS641	32805		45	55113	10405	X		7831	10406			9334	16001		
54LS642	32806			55114	10403	X		7832	10407			9338	15701		265
54LS645	32807			55115	10404	X	120	78G	11702			9341	01101	X	
54LS670	31901	X		55182	10408			78M05	10702	X		93410	23001		
54LS73	30101	X		55183	10409			78M12	10703	X	195	93411	23003		
54LS74	30102	X	50	55325	13001	X		78M15	10704	X		93412 (60 ns)	23109		
54LS75	31601	X		55326	13002	X		78M24	10705			93415	23101		270
54LS76	30110	X		55327	13003	X	125	78MG	11701			93415 (45 ns)	23107		
54LS83A	31201	X		5532A	13102	X		7905	11505	X		93415 (60 ns)	23105		
54LS85	31101	X		5534A	13101	X		7912	11506	X	200	93417	20301		
54LS86	30502	X	55	5537	12502			7915	11507	X		93419	23201		
54LS90	31501	X		5540	00301	X		7924	11508			9342	01102		275
54LS905	44101			55450	12901		130	79G	11802	X		93421	23002		
54LS906	44102			55451	12902	X		79M05	11501	X		93422 (60 ns)	23110	X	
54LS907	44103			55452	12903			79M12	11502	X	205	93422A (45 ns)	23114	X	
54LS915	44104		60	55453	12904	X		79M15	11503	X		93425	23106	X	
54LS916	44105			55454	12905			79M24	11504	X		93425 (60 ns)	23102	X	280
54LS917	44106			55460	12906		135	79MG	11801			93425A (45 ns)	23108	X	
54LS92	31510	X		55461	12907	X		8035L	49002			93427	20302		
54LS93	31502	X		55462	12908			8048	49001		210	93436	20401		
54LS96	30604		65	55463	12909			8080A	42001	X		93438	20801		
54S00	07001	X		55464	12910			8086	53001	X		93446	20402		285
54S02	07301	X		555	10901	X	140	8212	42101			93448	20802		
54S03	07002	X		556	10902	X		8224	42201			93450	20903		
54S04	07003	X		558	10903			8228	42301		215	93451	20904		
54S05	07004	X	70	561	13301			8250	15204			93452	20601		

NOTE: Items marked X in the QPL column are listed on QPL-38510-65 with at least one source. * 80°C Max. † 100°C Max.

MILITARY PARTS–CROSS REFERENCE (Cont'd)

Commerical to Military (Cont'd)

Device	M38510/	QPL	LINE
93453	20602		
93458	50201		
93459	50202		
93460	20906		
93461	20905		5
93470	23301		
93471	23302		
935	03002	X	
93510	21001		
93511	21002		10
936	03003	X	
93L00	02804		
93L01	02907		
93L08	04502		
93L09	04601		15
93L10	02504		
93L12	04602		
93L14	04501		
93L16	02505		
93L18	04301		20
93L22	04603		
93L24	04401		
93L28	02803		
93L412 (75 ns)	23111		
93L415 (70 ns)	23103	X	25
93L420	23004		
93L422	23112	X	
93L422A	23115	X	
93L425	23104	X	
93L425A (50 ns)	23113	X	30
93Z510	21003		
93Z511	21004	X	
940	03002	X	
944	03102		
945	03301		35
946	03004	X	
948	03302		
950	03303		
951	03201		
957	03103		40
958	03104		
9601	01204	X	
9602	01205	X	
9614	10403	X	
9615	10404	X	45
962	03005	X	
9900A	46001		
9989	46501		
9LS51	30401		
9LS54	30402		50
AM26S07A	26001		
AM27S03	26004		
AM27S03A	26002		
AM27S07	26003		
AM9130ADM	23704		55
AM9130AFC	23702		
AM9130CDM	23703		
AM9130CFC	23701		
AM9130CFM	23703		
AM9140ADM	23712		60
AM9140AFC	23710		
AM9140AFM	23712		
AM9140CDM	23711		
AM9140CFC	23709		
AM9140CFM	23711		65
AM91L30ADM	23708		
AM91L30AF	23706		
AM91L30AFM	23708		
AM91L30CDM	23707		
AM91L30CF	23705		70
AM91L30CFM	23707		
AM91L40ADM	23716		
AM91L40AFC	23714		
AM91L40AFM	23716		
AM91L40CDM	23715		75
AM91L40CFC	23713		
AM91L40CFM	23715		
AM9310AFM	23704		
DAC-08	11301	X	
DAC-08A	11302	X	80
DG181A	11101	X	
DG182A	11102	X	
DG184A	11103	X	
DG185A	11104	X	
DG187A	11105	X	85
DG188A	11106	X	
DG190A	11107	X	
DG191A	11108	X	
DG300	11601		
DG301	11602		90
DG302	11603	X	
DG303	11604	X	
DG304	11605	X	
DG305	11606	X	
DG306	11607	X	95
DG307	11608	X	
ER2810	22501		
HA-2500	12204	X	
HA-2510	12205	X	
HA-2520	12206	X	100
HA-2600	12202	X	
HA-2620	12203	X	
HA-2700	12201		
HA4741	11003	X	
HD15530	50101		105
HM6504	24501	X	
HM6514	24502	X	
HM7602	20701	X	
HM7603	20702	X	
HM7610	20301	X	110
HM7611	20302	X	
HM76160	21001		
HM76161	21002	X	
HM7620	20401	X	
HM7621	20402	X	115
HM7640	20801		
HM7641	20802	X	
HM7642	20601	X	
HM7643-2	20602	X	
HM7644	20603		120
HM7680	20903		
HM7681	20904	X	
HM7684	20901		
HM7685	20902	X	
HPROM0512	20101	X	125
IM5603A	20201		
IM5623	20202		
LF147	11906		
LF151	11904	X	
LF153	11905		130
LF198	12501		
LH2101A	10105	X	
LH2110	10603		
LH2111	10305	X	
LM101A	10103	X	135
LM102	10601		
LM104	10202		
LM105	10203		
LM106	10303		
LM108A	10104	X	140
LM109	10701	X	
LM110	10602		
LM111	10304	X	
LM117H	11703	X	
LM117K	11704		145
LM118	10107	X	
LM120H-05	11501		
LM120H-12	11502		
LM120H-15	11503		
LM120H-24	11504		150
LM120K-05	11505		
LM120K-12	11506		
LM120K-15	11507		
LM120K-24	11508		
LM124	11005	X	155
LM129A	12402		
LM137H	11803		
LM137K	11804		
LM138K	11706		
LM139	11201	X	160
LM140K-05	10706		
LM140K-12	10707		
LM140K-15	10708		
LM140K-24	10709		
LM141H-05	10702		165
LM141H-12	10703		
LM141H-15	10704		
LM141H-24	10705		
LM148	11001	X	
LM149	11002		170
LM150K	11705		
LM193	11202	X	
LM199A	12401		
LM723	10201	X	
MC6821	40101		175
MCM5303	20101		
MCM5304	20102		
MCM6604A*	23602		
MCM6604A†	23604		
MCM6605*	23601		180
MCM6605†	23603		
MH0026	03501		
MK34000	40301		
MKB4096*	23602		
MKB4096†	23604		185
MM5280*	23505		
MM5280†	23506		
MPY12HJM	50005		
MPY16HJM	50006		
MPY23HJM	50007		190
MPY8HJM	50004		
OP-07	13502		
OP-07A	13501	X	
OP-227A	13504		
OP-27A	13503	X	195
PAL10H8	50301		
PAL10L8	50306	X	
PAL12H6	50302	X	
PAL12L6	50307	X	
PAL14H4	50303	X	200
PAL14L4	50308	X	
PAL16A4	50406		
PAL16C1	50305		
PAL16H2	50304		
PAL16L2	50309		205
PAL16L8	50401		
PAL16R4	50404	X	
PAL16R6	50403		
PAL16R8	50402		
PAL16X4	50405		210
PM155	11401	X	
PM155A	11404		
PM156	11402	X	
PM156A	11405	X	
PM157	11403	X	215
PM157A	11406	X	
PM2108A	10106	X	
REF10	12403		
S6831B	40301		
TDC1008JM	50001		220
TDC1009JM	50002		
TDC1010JM	50003		
TMS4050*	23502		
TMS4050†	23504		
TMS4060*	23501		225
TMS4060†	23503		
Z8001	52001		
Z8001A	52003		
Z8002	52002		
Z8002A	52004	X	230
Z80 CPU	48002		
Z80 CTC	48302		
Z80 DMA	48202		
Z80 PIO	48402		
Z80 SIO/2	48102		235
Z80A CPU	48001		
Z80A CTC	48301		
Z80A DMA	48201		
Z80A PIO	48401		
Z80A SIO/2	48101		240
Z80B CPU	48003		

NOTE: Items marked X in the QPL column are listed on QPL-38510-65 with at least one source. *** 80°C Max.** **† 100°C Max.**

MILITARY PARTS–CROSS REFERENCE

Military to Commerical

M38510/	Device	QPL	Line
00101	5430	X	
00102	5420	X	
00103	5410	X	
00104	5400	X	
00105	5404	X	5
00106	5412	X	
00107	5401	X	
00108	5405	X	
00109	5403	X	
00201	5472	X	10
00202	5473	X	
00203	54107	X	
00204	5476	X	
00205	5474	X	
00206	5470	X	15
00207	5479		
00301	5540	X	
00302	5437	X	
00303	5438	X	
00401	5402	X	20
00402	5423	X	
00403	5425	X	
00404	5427	X	
00501	5450	X	
00502	5451	X	25
00503	5453	X	
00504	5454	X	
00601	5482	X	
00602	5483	X	
00603	9304		30
00604	5480		
00701	5486	X	
00801	5406	X	
00802	5416	X	
00803	5407	X	35
00804	5417	X	
00805	5426	X	
00901	5495	X	
00902	5496	X	
00903	54164	X	40
00904	54165	X	
00905	54194	X	
00906	54195	X	
00909	54198		
00910	54166		45
01001	5442	X	
01002	5443		
01003	5444		
01004	5445	X	
01005	54145		50
01006	5446	X	
01007	5447	X	
01008	5448	X	
01009	5449		
01101	54181	X	55
01101	9341	X	
01102	54182		
01102	9342		
01201	54121	X	
01202	54122	X	60
01203	54123	X	
01204	9601	X	
01205	9602	X	
01301	5492	X	
01302	5493	X	65
01303	54160	X	
01304	54163	X	
01305	64162	X	
01306	54161	X	
01307	5490	X	70
01308	54192		
01309	54193	X	
01310	54196		
01401	54150	X	
01402	9312	X	75
01403	54153	X	
01404	9309	X	
01405	54157	X	
01405	9322	X	
01406	54151	X	80
01501	5475	X	
01502	5477		
01503	54116		
01503	9308		
01504	9314	X	85
01601	5408	X	
01602	5409	X	
01701	54174	X	
01702	54175	X	
01703	54173		90
01801	54170		
01901	54180	X	
02001	54L30	X	
02002	54L20	X	
02003	54L10	X	95
02004	54L00	X	
02005	54L04	X	
02006	54L01	X	
02006	54L03	X	
02101	54L71	X	100
02102	54L72	X	
02103	54L73	X	
02104	54L78	X	
02105	54L74	X	
02201	54H72	X	105
02202	54H73		
02203	54H74		
02204	54H76	X	
02205	54H101	X	
02206	54H103	X	110
02301	54H30	X	
02302	54H20	X	
02303	54H10	X	
02304	54H00	X	
02305	54H04	X	115
02306	54H01	X	
02307	54H22		
02401	54H40	X	
02501	54L90	X	
02502	54L93	X	120
02503	54L193		
02504	93L10		
02505	93L16		
02601	54L86	X	
02701	54L02	X	125
02801	54L95	X	
02802	54L164		
02803	93L28		
02804	93L00		
02805	76L70		130
02806	54L91		
02901	54L42		
02902	54L43		
02903	54L44		
02904	54L46		135
02905	54L47		
02906	76L42A		
02907	93L01		
03001	930	X	
03002	935	X	140
03002	940	X	
03003	936	X	
03004	946	X	
03005	962	X	
03101	932		145
03102	944		
03103	957		
03104	958		
03105	933		
03201	951		150
03301	945		
03302	948		
03303	950		
03304	9093		
03501	MH0026		155
04001	54H50	X	
04002	54H51	X	
04003	54H53		
04004	54H54		
04005	54H55	X	160
04101	54L51		
04102	54L54		
04103	54L55		
04201	54L121		
04202	54L122		165
04301	93L18		
04401	93L24		
04501	93L14		
04502	93L08		
04601	93L09		170
04602	93L12		
04603	93L22		
05001	4011A	X	
05002	4012A	X	
05003	4023A	X	175
05051	4011B	X	
05052	4012B	X	
05053	4023B	X	
05101	4013A	X	
05102	4027A	X	180
05103	4043A	X	
05151	4013B	X	
05152	4027B	X	
05153	4043B		
05201	4000A	X	185
05202	4001A	X	
05203	4002A	X	
05204	4025A	X	
05251	4000B		
05252	4001B	X	190
05253	4002B	X	
05254	4025B	X	
05301	4007A	X	
05302	4019A	X	
05303	4030A	X	195
05304	4048A		
05351	4007UB	X	
05352	4019B	X	
05353	4030B	X	
05354	4048B		200
05401	4008A	X	
05451	4008B		
05501	4009A	X	
05502	4010A	X	
05503	4049A	X	205
05504	4050A	X	
05505	4041A		
05551	4009UB		
05552	4010B		
05553	4049B		210
05553	4049UB	X	
05554	4050B	X	
05555	4041UB		
05601	4017A	X	
05602	4018A	X	215
05603	4020A	X	
05604	4022A	X	
05605	4024A	X	
05651	4017B	X	
05652	4018B	X	220
05653	4020B	X	
05654	4022B		
05655	4024B	X	
05701	4006A	X	
05702	4014A	X	225
05703	4015A	X	
05704	4021A	X	
05705	4031A	X	
05706	4034A		
05751	4006B		230
05752	4014B	X	
05753	4015B		
05754	4021B		
05756	4034B	X	
05801	4016A	X	235
05802	4066A	X	
05851	4016B		
05852	4066B		
05901	4028A		
05951	4028B		240
06001	10501	X	
06002	10502	X	
06003	10505	X	
06004	10506	X	
06005	10507	X	245
06006	10509	X	
06101	10531	X	
06102	10631	X	
06103	10576	X	
06104	10535	X	250
06201	10504	X	
06202	10597	X	
06301	10524	X	
06302	10525	X	
07001	54S00	X	255
07002	54S03	X	
07003	54S04	X	
07004	54S05	X	
07005	54S10	X	
07006	54S20	X	260
07007	54S22	X	
07008	54S30	X	
07009	54S133	X	
07010	54S134		
07101	54S74	X	265
07102	54S112	X	
07103	54S113	X	
07104	54S114	X	
07105	54S174	X	
07106	54S175	X	270
07201	54S40	X	
07301	54S02	X	
07401	54S51	X	
07402	54S64	X	
07403	54S65	X	275
07501	54S86	X	
07502	54S135		
07601	54S194	X	
07602	54S195		
07701	54S138	X	280
07702	54S139	X	
07703	54S280		
07801	54S181	X	
07802	54S182	X	
07901	54S151	X	285
07902	54S153	X	
07903	54S157	X	
07904	54S158	X	
07905	54S251		
07906	54S257	X	290
07907	54S258		

NOTE: Items marked X in the QPL column are listed on QPL-38510-61 with at least one source. *** 80°C Max.** **† 100°C Max.**

MILITARY PARTS–CROSS REFERENCE (Cont'd)

Military to Commerical (Cont'd)

M38510/	Device	QPL	Line
07908	54S253	X	
08001	54S11	X	
08002	54S15		
08003	54S08	X	
08004	54S09	X	5
08101	54S140	X	
08201	54S85	X	
10101	741	X	
10102	747	X	
10103	LM101A	X	10
10104	LM108A	X	
10105	LH2101A	X	
10106	PM2108A	X	
10107	LM118	X	
10108	1558	X	15
10201	723		
10201	LM723	X	
10202	LM104		
10203	LM105		
10301	710	X	20
10302	711		
10303	LM106		
10304	LM111	X	
10305	LH2111	X	
10401	55107	X	25
10402	55108	X	
10403	55114	X	
10403	9614	X	
10404	55115	X	
10404	9615	X	30
10405	55113	X	
10406	7831		
10407	7832		
10408	55182		
10408	7820		35
10409	55183		
10409	7830		
10501	5040		
10502	5041		
10503	5042		40
10504	5043		
10505	5044		
10506	5045		
10507	5046		
10508	5047		45
10601	LM102		
10602	LM110		
10603	LH2110		
10701	LM109	X	
10702	78M05	X	50
10702	LM141H-05		
10703	78M12	X	
10703	LM141H-12		
10704	78M15	X	
10704	LM141H-15		55
10705	78M24		
10705	LM141H-24		
10706	7805	X	
10706	LM140K-05		
10707	7812	X	60
10707	LM140K-12		
10708	7815	X	
10708	LM140K-15		
10709	7824	X	
10709	LM140K-24		65
10801	3018A		
10802	3045	X	
10901	555	X	
10902	556	X	
10903	558		70
11001	LM148	X	
11002	LM149		
11003	4156	X	
11003	HA4741	X	
11004	4136	X	75
11005	LM124	X	
11101	DG181A	X	
11102	DG182A	X	
11103	DG184A	X	
11104	DG185A	X	80
11105	DG187A	X	
11106	DG188A	X	
11107	DG190A	X	
11108	DG191A	X	
11201	LM139	X	85
11202	LM193	X	
11301	DAC-08	X	
11302	DAC-08A	X	
11401	PM155	X	
11402	PM156	X	90
11403	PM157	X	
11404	PM155A		
11405	PM156A	X	
11406	PM157A	X	
11501	79M05	X	95
11501	LM120H-05		
11502	79M12	X	
11502	LM120H-12		
11503	79M15	X	
11503	LM120H-15		100
11504	79M24	X	
11504	LM120H-24		
11505	7905	X	
11505	LM120K-05		
11506	7912	X	105
11506	LM120K-12		
11507	7915	X	
11507	LM120K-15		
11508	7924		
11508	LM120K-24		110
11601	DG300		
11602	DG301		
11603	DG302	X	
11604	DG303	X	
11605	DG304	X	115
11606	DG305	X	
11607	DG306	X	
11608	DG307	X	
11701	78MG		
11702	78G		120
11703	LM117H	X	
11704	LM117K		
11705	LM150K		
11706	LM138K		
11801	79MG		125
11802	79G	X	
11803	LM137H		
11804	LM137K		
11901	061		
11902	062		130
11903	064		
11904	071		
11904	771	X	
11904	LF151	X	
11905	072		135
11905	772	X	
11905	LF153		
11906	074		
11906	774		
11906	LF147		140
12001	5200		
12002	5203		
12003	5201		
12004	5204		
12005	5202		145
12006	5205		
12007	5206		
12008	5207		
12009	5210		
12010	5213		150
12011	5211		
12012	5214		
12013	5212		
12014	5215		
12015	5216		155
12016	5217		
12101	562 (2 μA)	X	
12102	562 (5 μA)		
12102	563		
12103	565		160
12201	HA-2700		
12202	HA-2600	X	
12203	HA-2620	X	
12204	HA-2500	X	
12205	HA-2510	X	165
12206	HA-2520	X	
12301	200		
12302	201	X	
12401	LM199A		
12402	LM129A		170
12403	REF10		
12501	LF198		
12502	5537		
12601	1524		
12701	7523		175
12702	7520		
12703	7521		
12704	7541	X	
12705	1020		
12706	1220		180
12707	1218		
12801	584S		
12802	584T		
12901	55450		
12902	55451	X	185
12903	55452		
12904	55453	X	
12905	55454		
12906	55460		
12907	55461	X	190
12908	55462		
12909	55463		
12910	55464		
13001	55325	X	
13002	55326	X	195
13003	55327	X	
13101	5534A	X	
13102	5532A	X	
13301	561		
13501	OP-07A	X	200
13502	714		
13502	OP-07		
13503	OP-27A	X	
13504	OP-227A		
13901	534T		205
13902	534S		
13903	532S		
15001	5485	X	
15002	9324	X	
15101	5413	X	210
15102	5414	X	
15103	54132	X	
15201	54154		
15201	9311	X	
15202	54155	X	215
15203	54156	X	
15204	8250		
15205	8251		
15206	8252		
15206	9301	X	220
15301	54125		
15302	54126	X	
15401	54120		
15501	54H08	X	
15502	54H11	X	225
15503	54H21	X	
15504	54H08*2		
15601	54147		
15602	54148		
15603	9318	X	230
15701	9338		
15801	9321		
15802	9317		
15901	9300		
15902	9328	X	235
16001	9334		
16101	5432	X	
16201	5428		
16301	54365	X	
16302	54366		240
16303	54367	X	
16304	54368	X	
17001	4081B	X	
17002	4082B	X	
17003	4073B	X	245
17101	4071B	X	
17102	4072B	X	
17103	4075B	X	
17201	4085B	X	
17202	4086B	X	250
17203	4070B	X	
17204	4077B	X	
17301	4514B		
17302	4515B		
17303	4532B		255
17304	4555B		
17305	4556B		
17401	4069UB	X	
17402	40107B		
17403	4502B	X	260
17404	40109B		
17501	4076B		
17502	4095B		
17503	4096B		
17504	4098B	X	265
17505	40174B		
17601	4099B	X	
17602	4508B		
17701	4093B		
17702	40106B		270
17801	4067B		
17802	4097B		
17803	40257B		
17901	4094B		
17902	40100B		275
17903	40104B		
17904	40105B		
17905	40108B		
17906	40194B		
17907	40208B		280
18001	40160B		
18002	40161B		
18003	40162B		
18004	40163B		
18101	40102B		285
18102	40103B		
18103	40192B		
18104	40193B		
18105	4510B		

NOTE: Items marked X in the QPL column are listed on QPL-38510-61 with at least one source. *** 80°C Max.** **† 100°C Max.**

MILITARY PARTS–CROSS REFERENCE (Cont'd)

Military to Commerical (Cont'd)

M38510/	Device	QPL	Line
18106	4516B		
18107	4518B		
18108	4520B		
19001	506	X	
19001	6116		5
19002	506A		
19003	507	X	
19003	6216		
19004	507A		
19005	508A		10
19006	509A		
19007	508		
19007	6108	X	
19008	509	X	
19008	6208		15
20101	54186		
20101	HPROM0512	X	
20101	MCM5303		
20102	MCM5304		
20201	IM5603A		20
20202	IM5623		
20301	5300-1		
20301	82S126	X	
20301	93417		
20301	HM7610	X	25
20302	5301-1	X	
20302	54S287	X	
20302	82S129	X	
20302	93427		
20302	HM7611	X	30
20401	5305-1		
20401	82S130	X	
20401	93436		
20401	HM7620	X	
20402	5306-1		35
20402	54S571	X	
20402	82S131	X	
20402	93446		
20402	HM7621	X	
20501	7620-8		40
20502	7621-8		
20601	5352-1		
20601	54S573	X	
20601	82S136		
20601	93452		45
20601	HM7642	X	
20602	5353-1	X	
20602	82S137	X	
20602	93453		
20602	HM7643-2	X	50
20603	HM7644		
20701	5330		
20701	82S23	X	
20701	HM7602	X	
20702	5331		55
20702	54S288	X	
20702	82S123	X	
20702	HM7603	X	
20801	5340-1		
20801	82S140		60
20801	93438		
20801	HM7640		
20802	5341-1		
20802	54S474	X	
20802	82S141	X	65
20802	93448		
20802	HM7641	X	
20803	82S115	X	
20804	5348-1		
20805	5349-1		70
20901	82S184		
20901	HM7684		
20902	29651	X	
20902	77S185	X	
20902	82S185	X	75
20902	HM7685	X	
20903	5380-1		
20903	82S180		
20903	93450		
20903	HM7680		80
20904	27S181	X	
20904	29631	X	
20904	5381-2		
20904	77S181	X	
20904	82S181	X	85
20904	93451		
20904	HM7681	X	
20905	82S2708	X	
20905	93461		
20906	93460		90
20907	53S840		
20908	53S841	X	
21001	53S1680		
21001	82S190		
21001	93510		95
21001	HM76160		
21002	29681	X	
21002	3636		
21002	53S1681		
21002	77S191	X	100
21002	82S191	X	
21002	93511		
21002	HM76161	X	
21003	93Z510		
21004	93Z511	X	105
21901	6654		
22001	2708		
22101	2516		
22101	2716		
22201	2532		110
22201	2732		
22501	ER2810		
23001	93410		
23002	93421		
23003	93411		115
23004	93L420		
23101	82S10		
23101	93415		
23102	82S11		
23102	93425 (60 ns)	X	120
23103	93L415 (70 ns)	X	
23104	93L425	X	
23105	93415 (60 ns)		
23106	93425	X	
23107	82S10 (45 ns)		125
23107	93415 (45 ns)		
23108	82S11 (45 ns)		
23108	93425A (45 ns)	X	
23109	93412 (60 ns)		
23110	93422 (60 ns)	X	130
23111	93L412 (75 ns)		
23112	93L422	X	
23113	93L425A (50 ns)	X	
23114	93422A (45 ns)	X	
23115	93L422A	X	135
23201	93419		
23301	93470		
23302	93471		
23501	TMS4060*		
23502	TMS4050*		140
23503	TMS4060†		
23504	TMS4050†		
23505	MM5280*		
23506	MM5280†		
23601	MCM6605*		145
23602	MCM6604A*		
23602	MKB4096*		
23603	MCM6605†		
23604	MCM6604A†		
23604	MKB4096†		150
23701	AM9130CFC		
23702	AM9130AFC		
23703	AM9130CDM		
23703	AM9130CFM		
23704	AM9130ADM		155
23704	AM9310AFM		
23705	AM91L30CF		
23706	AM91L30AF		
23707	AM91L30CDM		
23707	AM91L30CFM		160
23708	AM91L30ADM		
23708	AM91L30AFM		
23709	AM9140CFC		
23710	AM9140AFC		
23711	AM9140CDM		165
23711	AM9140CFM		
23712	AM9140ADM		
23712	AM9140AFM		
23713	AM91L40CFC		
23714	AM91L40AFC		170
23715	AM91L40CDM		
23715	AM91L40CFM		
23716	AM91L40ADM		
23716	AM91L40AFM		
23801	2147	X	175
23802	2114		
23803	2147H	X	
23804	2114A		
23805	2147H-3	X	
23806	2148H	X	180
23807	2147H-2	X	
23901	54C929		
23901	6508		
23902	54C930		
23902	6518		185
24001	2117 (200 ns)		
24001	4116 (200 ns)	X	
24002	2117 (250 ns)		
24002	4116 (250 ns)	X	
24401	2164 (1 ms ref)		190
24401	4564 (1 ms ref)		
24401	6665 (1 ms ref)		
24401	8264 (1 ms ref)		
24402	2164 (2 ms ref)		
24402	4564 (2 ms ref)	X	195
24402	6665 (2 ms ref)		
24402	8264 (2 ms ref)		
24501	HM6504	X	
24502	HM6514	X	
26001	AM26S07A		200
26002	AM27S03A		
26003	AM27S07		
26004	AM27S03		
30001	54LS00	X	
30002	54LS03	X	205
30003	54LS04	X	
30004	54LS05	X	
30005	54LS10	X	
30006	54LS12	X	
30007	54LS20	X	210
30008	54LS22	X	
30009	54LS30	X	
30101	54LS73	X	
30102	54LS74	X	
30103	54LS112	X	215
30104	54LS113	X	
30105	54LS114	X	
30106	54LS174	X	
30107	54LS175	X	
30108	54LS107	X	220
30109	54LS109	X	
30110	54LS76	X	
30201	54LS40	X	
30202	54LS37	X	
30203	54LS38	X	225
30204	54LS28	X	
30301	54LS02	X	
30302	54LS27	X	
30303	54LS266	X	
30401	54LS51	X	230
30401	9LS51		
30402	54LS54	X	
30402	9LS54		
30501	54LS32	X	
30502	54LS86	X	235
30601	54LS194A	X	
30602	54LS195A	X	
30603	54LS195B	X	
30604	54LS96		
30605	54LS164	X	240
30606	54LS295B	X	
30607	54LS395B	X	
30608	54LS165A	X	
30609	54LS166	X	
30701	54LS138	X	245
30702	54LS139	X	
30703	54LS42	X	
30704	54LS47	X	
30801	54LS181	X	
30901	54LS151	X	250
30902	54LS153	X	
30903	54LS157	X	
30904	54LS158	X	
30905	54LS251	X	
30906	54LS257	X	255
30907	54LS258	X	
30908	54LS253	X	
30909	54LS298	X	
31001	54LS11	X	
31002	54LS15	X	260
31003	54LS21	X	
31004	54LS08	X	
31005	54LS09	X	
31101	54LS85	X	
31201	54LS83A	X	265
31202	54LS283	X	
31301	54LS13	X	
31302	54LS14	X	
31303	54LS132	X	
31401	54LS123	X	270
31402	54LS221	X	
31403	54LS122	X	
31501	54LS90	X	
31502	54LS93	X	
31503	54LS160A	X	275
31504	54LS161A	X	
31505	54LS168		
31506	54LS169A	X	
31507	54LS192	X	
31508	54LS193	X	280
31509	54LS191	X	
31510	54LS92	X	
31511	54LS162A	X	
31512	54LS163A	X	
31513	54LS190	X	285
31601	54LS75	X	
31602	54LS279	X	
31603	54LS259	X	
31604	54LS375	X	

NOTE: Items marked X in the QPL column are listed on QPL-38510-61 with at least one source. * 80°C Max. † 100°C Max.

MILITARY PARTS–CROSS REFERENCE (Cont'd)

Military to Commerical (Cont'd)

M38510/	Device	QPL	Line
31605	54LS259B	X	
31701	54LS124		
31702	54LS324		
31703	54LS629		
31704	54LS624		5
31801	54LS261		
31901	54LS670	X	
31902	54LS170	X	
32001	54LS196	X	
32002	54LS197	X	10
32003	54LS290	X	
32004	54LS293	X	
32102	54LS26	X	
32201	54LS365	X	
32202	54LS366	X	15
32203	54LS367	X	
32204	54LS368	X	
32301	54LS125	X	
32302	54LS126	X	
32401	54LS240	X	20
32402	54LS241	X	
32403	54LS244	X	
32501	54LS273	X	
32502	54LS373	X	
32503	54LS374	X	25
32504	54LS377	X	
32505	54LS363		
32601	54LS155	X	
32602	54LS156	X	
32701	54LS390	X	30
32702	54LS393	X	
32703	54LS490	X	
32801	54LS242	X	
32802	54LS243	X	
32803	54LS245	X	35
32804	54LS640		
32805	54LS641		
32806	54LS642		
32807	54LS645		
32901	54LS280	X	40
33001	54F00	X	
33002	54F04	X	
33003	54F10	X	
33004	54F20	X	
33106	25LS174	X	45
33107	25LS175	X	
33201	54F240	X	
33202	54F241	X	
33203	54F244	X	
33301	54F02	X	50
33401	54F64	X	
33501	54F32	X	
33601	54F194		
33701	54F138	X	
33702	54F139	X	55
33901	54F151		
33902	54F153		
33903	54F157		
33904	54F158		
33905	54F251		60
33906	54F257		
33907	54F258		
33908	54F253	X	
33909	54F352	X	
33910	54F353	X	65
34001	54F08	X	
34002	54F11	X	
34101	54F174	X	
34102	54F109	X	
34103	54F112		70
34104	54F175	X	
34105	54F374	X	
34106	54F534		
34201	54F283		
34501	54F86		75
34601	54F373	X	
34602	54F533		
34801	54F242		
34802	54F243		
34803	54F245		80
34901	54F280	X	
36001	54LS148	X	
36002	54LS348	X	
36101	54LS173A	X	
37001	54ALS00	X	85
37002	54ALS10	X	
37003	54ALS20	X	
37004	54ALS30	X	
37005	54ALS133	X	
37006	54ALS04	X	90
37101	54ALS74	X	
37102	54ALS109	X	
37103	54ALS112A	X	
37104	54ALS574		
37105	54ALS576		95
37106	54ALS874		
37107	54ALS876		
37201	54ALS174		
37202	54ALS175	X	
37203	54ALS373		100
37204	54ALS374		
37301	54ALS02	X	
37302	54ALS27	X	
37401	54ALS08	X	
37402	54ALS11	X	105
37501	54ALS32	X	
37601	54ALS299		
37602	54ALS323		
37701	54ALS138	X	
37901	54ALS857	X	110
38001	54ALS161		
38002	54ALS163		
38003	54ALS169		
38004	54ALS561		
38005	54ALS569		115
38101	54ALS160		
38102	54ALS162		
38103	54ALS168		
38104	54ALS560		
38105	54ALS568		120
38201	54ALS573		
38202	54ALS580		
38203	54ALS873		
38204	54ALS880		
38301	54ALS240A	X	125
38302	54ALS241A	X	
38303	54ALS244A	X	
38401	54ALS1000	X	
38401	54ALS37	X	
38402	54ALS1002	X	130
38402	54ALS28	X	
38403	54ALS1003		
38404	54ALS1008		
38405	54ALS1010		
38406	54ALS1011		135
38407	54ALS1020	X	
38407	54ALS40	X	
38408	54ALS1032		
38409	54ALS1004		
38410	54ALS1005		140
38411	54ALS1034	X	
38412	54ALS1035		
38501	54ALS640		
38502	54ALS641		
38503	54ALS642		145
38504	54ALS643		
38505	54ALS645		
38506	54ALS242		
38507	54ALS243		
40001	6800		150
40101	MC6821		
40201	6810		
40301	2316E		
40301	2616		
40301	3516F		155
40301	52116		
40301	68316B		
40301	68A316E		
40301	9218		
40301	MK34000		160
40301	S6831B		
40302	6831B		
42001	8080A	X	
42101	54S412		
42101	8212		165
42201	54LS424		
42201	8224		
42301	54LS428		
42301	8228		
44001	2901A		170
44101	2905		
44101	54LS905		
44102	2906		
44102	54LS906		
44103	2907		175
44103	54LS907		
44104	2915		
44104	54LS915		
44105	2916		
44105	54LS916		180
44106	2917		
44106	54LS917		
44201	2918		
44301	2909		
44401	2914		185
44501	2910		
46001	9900A		
46501	9989		
47001	1802		
47101	1821		190
47102	1822		
47201	1832		
47301	1852		
47401	1853		
47601	1856		195
47602	1857		
48001	Z80A CPU		
48002	Z80 CPU		
48003	Z80B CPU		
48101	Z80A SIO/2		200
48102	Z80 SIO/2		
48201	Z80A DMA		
48202	Z80 DMA		
48301	Z80A CTC		
48302	Z80 CTC		205
48401	Z80A PIO		
48402	Z80 PIO		
49001	8048		
49002	8035L		
50001	TDC1008JM		210
50002	TDC1009JM		
50003	TDC1010JM		
50004	MPY8HJM		
50005	MPY12HJM		
50006	MPY16HJM		215
50007	MPY23HJM		
50101	HD15530		
50201	82S101		
50201	93458		
50202	82S100		220
50202	93459		
50301	PAL10H8		
50302	PAL12H6	X	
50303	PAL14H4	X	
50304	PAL16H2		225
50305	PAL16C1		
50306	PAL10L8	X	
50307	PAL12L6	X	
50308	PAL14L4	X	
50309	PAL16L2		230
50401	PAL16L8		
50402	PAL16R8		
50403	PAL16R6		
50404	PAL16R4	X	
50405	PAL16X4		235
50406	PAL16A4		
52001	Z8001		
52002	Z8002		
52003	Z8001A		
52004	Z8002A	X	240
53001	8086	X	

NOTE: Items marked X in the QPL column are listed on QPL-38510-61 with at least one source. *** 80°C Max.** **† 100°C Max.**

Detailed Product Information on Military Parts Provided by:

CIRCUIT TECHNOLOGY INC.	601
FAIRCHILD	603
HARRIS	624
HUGHES AIRCRAFT	683
INMOS	685
MICRO POWER SYSTEMS	688
MONOLITHIC MEMORIES	689
MOSTEK	694
MOTOROLA	696
RAYTHEON	700
RCA SOLID STATE	702
TEXAS INSTRUMENTS	707
XICOR	734

DIGITAL

Arithmetic Functions

Description	M38510/	Device	Source	Line
ALU/Function Generator	07801	54S181	Signetics	
Arithmetic Logic/Function Generator	01101	54181	National	
	30801	54LS181	Motorola	
Look-Ahead Carry Generator	01102	54182	Motorola	
	07802	54S182	TI	15
2-Bit Binary Full Adder	00601	5482	Motorola	
4-Bit Binary Full Adder	31201	54LS83A	Fairchild	
		54LS83A	Motorola	
		54LS83A	TI	
	31202	54LS283	Fairchild	20
		54LS283	Motorola	
		54LS283	National	
		54LS283	TI	
4-Bit Binary Full Adder (Look-Ahead Carry)	00602	5483	Fairchild	
		5483	National	25
		5483	Signetics	
		5483	TI	
4-Bit Full Adder	05401	4008A	SSS	
4-Bit Magnitude Comparator	08201	54S85	National	
		54S85	Signetics	30
		54S85	TI	
	15001	5485	Motorola	
		5485	National	
		5485	Signetics	
	15002	9324	Motorola	35
	31101	54LS85	Fairchild	
		54LS85	Motorola	
		54LS85	National	
		54LS85	Signetics	
		54LS85	TI	40

Buffers/Inverters

Description	M38510/	Device	Source	Line
Dual Complementary Pair plus Inverter	05301	4007A	National	
		4007A	RCA	
		4007A	SSS	
Dual 4-Input Buffer NAND Gate	38407	54ALS40	TI	
Dual 4-Input NAND Buffer	00301	5440	Fairchild	45
		5440	Motorola	
		5440	National	
		5440	TI	
	02401	54H40	Motorola	
		54H40	TI	50
	07201	54S40	Signetics	
	30201	54LS40	Motorola	
		54LS40	National	
		54LS40	TI	
Hex Buffer/Converter, Inverting	R05503	4049A	RCA	55
	05501	4009A	SSS	
	05503	4049A	Motorola	
		4049A	National	
		4049A	SSS	
Hex Buffer/Converter, Non-Inverting	R05504	4050A	RCA	60
	R05554	4050B	RCA	
	05502	4010A	SSS	
	05504	4050A	Motorola	
		4050A	National	
		4050A	SSS	65
Hex Buffer, Three State	16303	54367	Signetics	
Hex Buffer, TS	16301	54365	Signetics	
	32201	54LS365	Fairchild	
		54LS365	Motorola	
		54LS365	National	70
		54LS365	Signetics	
		54LS365	TI	
	32203	54LS367	Fairchild	
		54LS367	Motorola	
		54LS367	National	75
		54LS367	Signetics	
		54LS367	TI	
	38411	54ALS1034	TI	
Hex Inverter	R17401	4069UB	RCA	
	00105	5404	Fairchild	80
		5404	Motorola	
		5404	National	
		5404	Signetics	
		5404	TI	
	02005	54L04	National	85
	02305	54H04	Fairchild	
		54H04	Motorola	
		54H04	TI	
	03002	935	Fairchild	
	03003	936	Fairchild	90
	07003	54S04	National	
		54S04	Signetics	
		54S04	TI	
	30003	54LS04	Fairchild	
		54LS04	Motorola	95
		54LS04	National	
		54LS04	Signetics	
		54LS04	TI	
	33002	54F04	Fairchild	
		54F04	Motorola	100
	37006	54ALS04	TI	
Hex Inverter/Buffer	R17403	4502B	RCA	
Hex Inverter, O/C	00108	5405	Motorola	
		5405	National	
		5405	TI	105
	07004	54S05	TI	
	30004	54LS05	Fairchild	
		54LS05	Motorola	
		54LS05	National	
		54LS05	TI	110
Hex Inverter, TS	16304	54368	Signetics	
	32202	54LS366	Fairchild	
		54LS366	Motorola	
		54LS366	National	
		54LS366	TI	115
	32204	54LS368	Fairchild	
		54LS368	Motorola	
		54LS368	National	
		54LS368	TI	
Hex Inverter, Unbuffered Outputs	R05553	4049UB	RCA	120
Quad Gated Buffer, TS	15302	54126	Signetics	
	32301	54LS125	Motorola	
		54LS125	Signetics	
		54LS125	TI	
	32302	54LS126	Motorola	125
		54LS126	TI	
Quad 2-Input Buffer NAND Gate	38401	54ALS37	TI	
Quad 2-Input NAND Buffer	00302	5437	Fairchild	
		5437	Motorola	
		5437	National	130
		5437	TI	
	30202	54LS37	Motorola	
		54LS37	National	
		54LS37	TI	
Quad 2-Input NAND Buffer, O/C	00303	5438	Motorola	135
		5438	National	
		5438	TI	
Quad 2-Input NOR Buffer	30204	54LS28	Motorola	
	38402	54ALS28	TI	

Counters

Description	M38510/	Device	Source	Line
Binary Up Counter	32002	54LS197	National	140
Binary Up/Down Counter	31508	54LS193	Fairchild	
		54LS193	Motorola	
		54LS193	TI	
Decade Counter	31501	54LS90	Motorola	
		54LS90	TI	145
Decade Counter/Divider, Decoded Output	R05651	4017B	RCA	
	05601	4017A	National	
		4017A	RCA	
		4017A	SSS	
Decade Counter, Divide-by-2 and 5	32001	54LS196	National	150
	32003	54LS290	Motorola	
		54LS290	TI	

Based on QPL-38510-65, 18 Oct 1985

MILITARY PARTS–QPL Selection Guide (Cont'd)

DIGITAL

Counters (Cont'd)

Description M38510/	Device	Source	Line
Decade Counter, Ripple			
01307	5490	Motorola	
	5490	National	
02501	54L90	National	
Decade Up/Down			
01309	54193	Signetics	
Decade Up/Down Counter			
31507	54LS192	Motorola	5
	54LS192	National	
	54LS192	TI	
Divide-by-8 Counter/Divider, Decoded Output			
05604	4022A	National	
	4022A	RCA	
	4022A	SSS	10
Divide-by-12 Counter			
31510	54LS92	Motorola	
	54LS92	TI	
Divide-by-12 Counter (÷2, ÷6)			
01301	5492	National	
Dual Decade Counter, Ripple			
32701	54LS390	TI	
32703	54LS490	Signetics	15
	54LS490	TI	
Dual 4-Bit Binary Counter, Ripple			
32702	54LS393	Motorola	
	54LS393	TI	
Dual 4-Bit Binary Up Counter, Ripple			
32702	54LS393	Signetics	
Fully Synchronous Decade Counter			
01305	54162	Motorola	20
	54162	National	
31511	54LS162	Motorola	
	54LS162	TI	
Fully Synchronous 4-Bit Binary Counter			
01304	54163	National	
	54163	Signetics	25
31512	54LS163	Motorola	
	54LS163	Signetics	
	54LS163	TI	
Presettable Divide-by-N Counter			
05602	4018A	Motorola	
	4018A	National	30
05652	4018B	National	
	4018B	RCA	
Synchronous Binary Up/Down Counter			
31509	54LS191	Motorola	
	54LS191	National	
	54LS191	Signetics	35
	54LS191	TI	
Synchronous Decade Counter			
01303	54160	Motorola	
	54160	National	
31503	54LS160	Motorola	
	54LS160	TI	40
Synchronous Decade Up/Down Counter			
31513	54LS190	Motorola	
	54LS190	TI	
Synchronous, Preset Input, Mode Control, Look-Ahead Carry, Counter			
31506	54LS169A	National	
Synchronous 4-Bit Binary Counter			
01306	54161	Motorola	
	54161	National	45
	54161	Signetics	
	54161	TI	

(Continued)

Description M38510/	Device	Source	Line
Synchronous 4-Bit Binary Counter (Cont'd)			
31504	54LS161	Motorola	
	54LS161	Signetics	
	54LS161	TI	50
4-Bit Binary Counter			
01302	5493	Signetics	
02502	54L93	National	
31502	54LS93	Motorola	
	54LS93	National	
	54LS93	TI	55
4-Bit Binary Counter, Ripple			
32004	54LS293	Motorola	
	54LS293	TI	
7-Bit Binary Counter			
05605	4024A	Motorola	
	4024A	National	
	4024A	RCA	60
	4024A	SSS	
7-Stage Counter			
05655	4024B	RCA	
14-Bit Binary Counter			
R05653	4020B	RCA	
05603	4020A	Motorola	
	4020A	National	65
	4020A	RCA	

Decoders

Description M38510/	Device	Source	Line
BCD to Decimal Decoder			
30703	54LS42	Fairchild	
	54LS42	Motorola	
	54LS42	National	
	54LS42	TI	70
BCD to 7-Segment Decoder			
30704	54LS47	Motorola	
	54LS47	TI	
BCD-to-Decimal Decoder			
01001	5442	Fairchild	
	5442	Motorola	
	5442	National	75
15206	9301	Motorola	
BCD-to-Decimal Decoder/Driver, 15V Output			
01007	5447	National	
BCD-to-Decimal Decoder/Driver, 30V Output			
01006	5446	National	
BCD-to-Decimal Decoder, O/C			
01004	5445	Motorola	
BCD-to-7 Segment Decoder/Driver with 30V Output			
01008	5448	Motorola	80
Dual 2-Line to 4-Line Decoder/Demultiplexer			
15202	54155	Motorola	
15203	54156	Motorola	
30702	54LS139	Fairchild	
	54LS139	Motorola	
	54LS139	National	85
	54LS139	TI	
33702	54F139	Fairchild	
Dual 2-to-4 Line Decoder/Demultiplexer			
32601	54LS155	Motorola	
	54LS155	TI	
32602	54LS156	Motorola	90
	54LS156	TI	
3- to 8-Line Decoder/Demultiplexer			
33701	54F138	Fairchild	
3-to-8-Line Decoder/Demultiplexer			
07701	54S138	National	
	54S138	TI	

(Continued)

Description M38510/	Device	Source	Line
3-to-8-Line Decoder/Demultiplexer (Cont'd)			
30701	54LS138	Fairchild	95
	54LS138	Motorola	
	54LS138	National	
	54LS138	Signetics	
	54LS138	TI	
4-Line to 16-Line Decoder/Demultiplexer			
15201	54154	Motorola	100
8-Input Priority Encoder			
15603	9318	Motorola	
36001	54LS148	TI	
36002	54LS348	TI	

Drivers

Description M38510/	Device	Source	Line
Hex Buffer/Driver, O/C High Voltage Output			
00803	5407	National	
	5407	TI	105
00804	5417	Motorola	
	5417	TI	
Hex Inverter Buffer/Driver, O/C High Voltage Output			
00801	5406	National	
	5406	TI	
00802	5416	National	110
	5416	TI	

Flip-Flops

Description M38510/	Device	Source	Line
Dual "D" Flip-Flop with Set/Reset			
R05101	4013A	RCA	
R05151	4013B	RCA	
05101	4013A	Motorola	
	4013A	National	115
	4013A	SSS	
Dual D-Type Edge-Triggered Flip-Flop			
00205	5474	Fairchild	
	5474	Motorola	
	5474	National	
	5474	TI	120
02105	54L74	National	
Dual D-Type Positive Edge-Triggered Flip-Flop with Preset and Clear			
30102	54LS74	Fairchild	
	54LS74	Motorola	
	54LS74	National	
	54LS74	Signetics	125
	54LS74	TI	
Dual Flip-Flop			
07101	54S74	Signetics	
	54S74	TI	
Dual J-K Flip-Flop			
02204	54H76	TI	
Dual J-K Master Slave Flip-Flop			
00203	54107	National	130
	54107	TI	
30101	54LS73	Motorola	
	54LS73	TI	
Dual J-K Master Slave Flip-Flop with Preset and Clear			
00204	5476	National	
	5476	TI	135
Dual J-K Master-Slave Flip-Flop			
R05151	4027B	RCA	
02103	54L73	National	
02104	54L78	National	
05102	4027A	Motorola	
	4027A	National	140
	4027A	RCA	
	4027A	SSS	
06104	10535	Motorola	

MILITARY PARTS–QPL Selection Guide (Cont'd)

DIGITAL

Flip-Flops (Cont'd)

Description	M38510/	Device	Source	Line
Dual J-K Negative Edge-Triggered Flip-Flop				
	02206	54H103	Motorola	
	07102	54S112	Signetics	
		54S112	TI	
Dual J-K Negative Edge-Triggered Flip-Flop Separate Preset and Clock (no clear)				
	07103	54S113	Signetics	
Dual J-K Negative Edge-Triggered Flip-Flop with Clock, Clear, and Preset				
	30105	54LS114	Fairchild	5
		54LS114	Motorola	
		54LS114	TI	
Dual J-K Negative Edge-Triggered Flip-Flop with Preset and Clear				
	30103	54LS112	Fairchild	
		54LS112	Motorola	
		54LS112	National	10
		54LS112	Signetics	
		54LS112	TI	
Dual J-K Negative Edge-Triggered Flip-Flop with Separate Preset and Clock				
	30104	54LS113	Fairchild	
		54LS113	Motorola	
		54LS113	TI	15
Dual J-K Positive Edge-Triggered Flip-Flop with Preset and Clear				
	30109	54LS109	Fairchild	
		54LS109	Motorola	
		54LS109	National	
		54LS109	Signetics	
		54LS109	TI	20
	34102	54F109	Fairchild	
Dual J-K-Master Slave Flip-Flop with Preset and Clear				
	30110	54LS76	Motorola	
		54LS76	TI	
Dual Master Slave Flip-Flop				
	30108	54LS107	Motorola	
		54LS107	TI	25
Dual D" Master Slave Flip-Flop				
	06101	10531	Motorola	
	06102	10631	Motorola	
Flip-Flop Dual J-K Master Slave				
	00202	5473	National	
		5473	TI	
Hex D-Type Flip-Flop				
	01701	54174	Fairchild	30
		54174	Motorola	
		54174	Signetics	
		54174	TI	
	07105	54S174	AMD	
		54S174	TI	35
	30106	54LS174	Fairchild	
		54LS174	Motorola	
		54LS174	National	
		54L174	Signetics	
		54LS174	TI	40
	33106	25LS174	Motorola	
		25LS174	TI	
Hex Edge-Triggered Flip-Flop with Clear				
	34101	54F174	Fairchild	
Hex D" Master Slave Flip-Flop				
	06103	10576	Motorola	
J-K Master Slave Flip-Flop (AND Inputs)				
	00201	5472	National	45
		5472	TI	
J-K Master-Slave Flip-Flop (AND Inputs)				
	02102	54L72	National	
	02201	54H72	Motorola	
J-K Master-Slave Flip-Flop (AND-OR Inputs)				
	02101	54L71	National	
J-K Negative Edge-Triggered Flip-Flop (AND-OR Inputs)				
	02205	54H101	Motorola	50
Octal D-Type Edge-Triggered Flip-Flop, Three State				
	32503	54LS374	Motorola	
		54LS374	TI	
Octal D-Type Edge-Triggered Flip-Flop with Clear				
	32501	54LS273	Motorola	
		54LS273	Signetics	
		54LS273	TI	55
Octal D-Type, Edge-Triggered, TS				
	34105	54F374	Fairchild	
Octal D-Type Flip-Flop with Enable				
	32504	54LS377	Motorola	
		54LS377	TI	
Positive Edge-Triggered J-K Flip-Flop				
	00206	5470	Motorola	
		5470	National	60
		5470	TI	
Quad D-Type Edge-Triggered Flip-Flop with Clear				
	30107	54LS175	Fairchild	
		54LS175	Motorola	
		54LS175	Signetics	
		54LS175	TI	65
Quad D-Type Flip-Flop				
	01702	54175	Fairchild	
		54175	TI	
	07106	54S175	AMD	
		54S175	TI	
	33107	25LS175	Motorola	70
Quad D-Type Three-State Flip-Flop				
	36101	54LS173A	TI	
Dual D-Type Flip-Flop				
	05151	4013B	National	
		4013B	SSS	
Dual D-Type Positive Edge-Triggered Flip-Flop with Preset and Clear				
	37101	54ALS74	TI	
Dual J-K Negative Edge-Triggered Flip-Flop with Preset and Clear				
	37103	54ALS112A	TI	75
Dual J-K Type Positive Edge-Triggered Flip-Flop with Preset and Clear				
	37102	54ALS109	TI	
Quad D-Type Edge-Triggered Flip-Flop with Clear				
	34104	54F175	Fairchild	
Quad D-Type Edge-Triggered Flip-Flop with Clear, Complementary Output				
	37202	54ALS175	TI	
Quad D-Type Flip-Flop				
	01702	54175	National	
Quad D-Type Three-State Flip Flop				
	36101	54LS173A	Signetics	80
Octal D-Type Edge-Triggered Flip-Flop, Three State				
	32503	54LS374	Signetics	
Octal D-Type Flip-Flop with Enable				
	32504	54LS377	Signetics	

Gates, AND/NAND

Description	M38510/	Device	Source	Line
DTL Logic Gate				
	03002	940	Fairchild	
Dual 4-Input AND Gate				
	15503	54H22	Motorola	
	17002	4082B	Motorola	85
		4082B	RCA	
		4082B	SSS	
	31003	54LS21	Fairchild	
		54LS21	Motorola	
		54LS21	National	90
		54LS21	TI	
Dual 4-Input NAND Gate				
	R05052	4012B	RCA	
	00102	5420	Fairchild	
		5420	Motorola	
		5420	National	95
		5420	TI	
	02002	54L20	National	
	02302	54H20	Motorola	
		54H20	TI	
	05002	4012A	Motorola	100
		4012A	National	
		4012A	RCA	
		4012A	SSS	
	07006	54S20	National	
		54S20	TI	105
	30007	54LS20	Fairchild	
		54LS20	Motorola	
		54LS20	National	
		54LS20	Signetics	
		54LS20	TI	110
	33004	54F20	Fairchild	
	37003	54ALS20	TI	
Dual 4-Input NAND Gate, Expandable, DTL				
	03001	930	Fairchild	
Dual 4-Input NAND Gate, O/C				
	07007	54S22	TI	
	30008	54LS22	Fairchild	115
		54LS22	Motorola	
		54LS22	National	
		54LS22	TI	
Hex AND Gate				
	06202	10597	Motorola	
Quad 2-Input AND Gate				
	01601	5408	Fairchild	120
		5408	Motorola	
		5408	National	
	08003	54S08	National	
		54S08	Signetics	
		54S08	TI	125
	15501	54H08	Motorola	
	31004	54LS08	Fairchild	
		54LS08	Motorola	
		54LS08	National	
		54LS08	Signetics	130
		54LS08	TI	
	31005	54LS09	Motorola	
	34001	54F08	Fairchild	
		54F08	Motorola	
	37401	54ALS08	TI	135
Quad 2-Input AND Gate, O/C				
	01602	5409	Fairchild	
		5409	Motorola	

Based on QPL-38510-65, 18 Oct 1985

MILITARY PARTS–QPL Selection Guide (Cont'd)

DIGITAL

Gates, AND/NAND (Cont'd)

Description M38510/	Device	Source	Line
Quad 2-Input NAND Gate			
R05001	4011A	RCA	
R05051	4011B	RCA	
00104	5400	Fairchild	
	5400	National	
	5400	Signetics	5
	5400	TI	
02004	54L00	National	
02304	54H00	Motorola	
	54H00	TI	
05001	4011A	Motorola	10
	4011A	National	
	4011A	SSS	
05051	4011B	SSS	
06201	10504	Motorola	
07001	54S00	Signetics	15
	54S00	TI	
30001	54LS00	Fairchild	
	54LS00	Motorola	
	54LS00	National	
	54LS00	Signetics	20
	54LS00	TI	
33001	54F00	Fairchild	
37001	54ALS00	TI	
Quad 2-Input NAND Gate, DTL			
03004	946	Fairchild	
Quad 2-Input NAND Gate, O/C			
00109	5403	National	25
	5403	TI	
02006	54L01	National	
	54L03	National	
02306	54H01	Motorola	
	54H01	TI	30
07002	54S03	TI	
30002	54LS03	Fairchild	
	54LS03	Motorola	
	54LS03	National	
	54LS03	TI	35
30203	54LS38	Motorola	
	54LS38	National	
	54LS38	TI	
Quad 2-Input NAND O/C to 15V			
32102	54LS26	Motorola	
	54LS26	TI	40
Quad-2-Input AND Gate			
R17001	4081B	RCA	
17001	4081B	Motorola	
	4081B	SSS	
Quad-2-Input NAND Gate, O/C			
00107	5401	Motorola	
	5401	National	45
	5401	TI	
Triple 3-Input AND Gate			
R17003	4073B	RCA	
08001	54S11	Signetics	
	54S11	TI	
15502	54H11	Motorola	50
17003	4073B	Motorola	
31001	54LS11	Fairchild	
	54LS11	Motorola	
	54LS11	National	
	54LS11	TI	55

(Continued)

Description M38510/	Device	Source	Line
Triple 3-Input AND Gate (Cont'd)			
34002	54F11	Fairchild	
37402	54ALS11	TI	
Triple 3-Input AND Gate, O/C			
31002	54LS15	Motorola	
	54LS15	National	
	54LS15	TI	60
Triple 3-Input NAND Gate			
R05003	4023A	RCA	
R05053	4023B	RCA	
00103	5410	Fairchild	
	5410	Motorola	
	5410	National	65
	5410	TI	
02003	54L10	National	
02303	54H10	Motorola	
	54H10	TI	
05003	4023A	Motorola	70
	4023A	National	
	4023A	SSS	
07005	54S10	Signetics	
	54S10	TI	
30005	54LS10	Fairchild	75
	54LS10	Motorola	
	54LS10	National	
	54LS10	Signetics	
	54LS10	TI	
33003	54F10	Fairchild	80
37002	54ALS10	TI	
Triple 3-Input NAND Gate, DTL			
03005	962	Fairchild	
Triple 3-Input NAND Gate, O/C			
00106	5412	TI	
30006	54LS12	Motorola	
	54LS12	National	85
	54LS12	TI	
Dual 4-Input NAND Gate			
R05052	4012B	SSS	
07006	54S20	Signetics	
Triple 3-Input NAND Gate			
R05053	4023B	SSS	
07005	54S10	National	90
Quad 2-Input AND Gate			
01602	5409	National	
Quad 2-Input NAND Gate			
07001	54S00	National	
8 Input NAND Gate			
07008	54S30	TI	
8-Input NAND Gate			
00101	5430	Fairchild	
	5430	Motorola	95
	5430	National	
	5430	TI	
02001	54L30	National	
02301	54H30	Motorola	
	54H30	TI	100
07008	54S30	National	
30009	54LS30	Fairchild	
	54LS30	Motorola	
	54LS30	National	
	54LS30	TI	105
37004	54ALS30	TI	
13-Input NAND Gate			
07009	54S133	National	
	54S133	Signetics	
37005	54ALS133	TI	

Gates, AND-OR/AND-OR-Invert

Description M38510/	Device	Source	Line
Dual 2-Wide 2-Input AOI			
R17201	4085B	RCA	110
17201	4085B	SSS	
Dual 2-2-Input AOI Gate			
04002	54H51	Motorola	
30401	54LS51	Fairchild	
	54LS51	Motorola	
	54LS51	TI	115
Quad AND/OR Select Gate			
05352	4019B	SSS	
Quad AND-OR Select Gate			
05302	4019A	National	
	4019A	RCA	
	4019A	SSS	
05352	4019B	National	120
2-Input AOI Gate			
07401	54S51	National	
07402	54S64	TI	
2-2-Input AOI Gate			
07401	54S51	Signetics	
2-2-Input AOI Gate, Expandable			
00501	5450	Motorola	
	5450	National	125
	5450	TI	
00502	5451	Motorola	
	5451	National	
	5451	TI	
04001	54H50	Motorola	130
2-2-2-2-Input AOI Gate			
00504	5454	National	
	5454	TI	
2-2-2-2-Input AOI Gate, Expandable			
00503	5453	National	
	5453	TI	
2-2-2-3-Input AOI Gate			
30402	54LS54	Fairchild	135
	54LS54	Motorola	
	54LS54	National	
	54LS54	TI	
4-Wide 2-Input AOI Gate, Expandable			
R17202	4086B	RCA	
4-2-3-2-Input AOI Gate			
07402	54S64	National	140
33401	54F64	Fairchild	
4-4-Input AOI Gate, Expandable			
04005	54H55	Motorola	

Gates, OR/NOR

Description M38510/	Device	Source	Line
Dual 3-Input NOR Gate plus Inverter			
05201	4000A	RCA	
	4000A	SSS	
Dual 4-Input NOR Gate			
R05203	4002A	RCA	145
R05253	4002B	RCA	
05203	4002A	Motorola	
	4002A	National	
	4002A	SSS	
Dual 4-Input NOR Gate with Strobe			
00403	5425	Motorola	150
	5425	TI	
Dual 4-Input NOR Gate with Strobe, Expandable			
00402	5423	Motorola	
	5423	TI	
Dual 4-Input OR Gate			
R17102	4072B	RCA	

MILITARY PARTS–QPL Selection Guide (Cont'd)

DIGITAL

Gates, OR/NOR (Cont'd)

Description	M38510/	Device	Source
Quad 2-Input Gate (3 NOR, 1 OR/NOR)	06002	10502	Motorola
Quad 2-Input NOR Gate	R05252	4001B	RCA
	00401	5402	Fairchild
		5402	National
		5402	TI
	02701	54L02	National
	05202	4001A	Motorola
		4001A	National
		4001A	RCA
		4001A	SSS
	05252	4001B	SSS
	07301	54S02	National
		54S02	Signetics
		54S02	TI
	30301	54LS02	Fairchild
		54LS02	Motorola
		54LS02	National
		54LS02	Signetics
		54LS02	TI
	33301	54F02	Fairchild
	37301	54ALS02	TI
	38402	54ALS1002	TI
Quad 2-Input OR Gate	R17101	4071B	RCA
	16101	5432	Signetics
	17101	4071B	SSS
	30501	54LS32	Fairchild
		54LS32	Motorola
		54LS332	National
		54LS32	TI
	37501	54ALS32	TI
Quad 2-Input OR/NOR Gate	06001	10501	Motorola
Triple 3-Input NOR Gate	00404	5427	Motorola
		5427	TI
	05204	4025A	Motorola
		4025A	National
		4025A	RCA
		4025A	SSS
	30302	54LS27	Fairchild
		54LS27	Motorola
		54LS27	National
		54LS27	TI
	37302	54ALS27	TI
Triple 3-Input OR Gate	R17103	4075B	RCA
Dual 4-Input NOR Gate with Strobe	00402	5423	National
Quad 2-Input OR Gate	33501	54F32	Fairchild
2-3-2-Input OR/NOR Gate	06003	10505	Motorola
4-3-3-Input OR/NOR Gate	06004	10506	Motorola
4-5-Input OR/NOR Gate	06006	10509	Motorola

Gates, Exclusive OR/NOR

Description	M38510/	Device	Source
Quad Exclusive OR Gate	H05353	4030B	National
	H17203	4070B	National
	R05353	4030B	RCA
	R17203	4070B	RCA
	R17204	4077B	RCA
	05303	4030A	Motorola
		4030A	National
		4030A	SSS
	05353	4030B	Motorola
		4030B	SSS
	17203	4070B	Motorola
		4070B	SSS
Quad 2-Input Exclusive NOR Gate, O/C	30303	54LS266	Fairchild
		54LS266	Motorola
		54LS266	National
		54LS266	TI
Quad 2-Input Exclusive OR	30502	54LS86	Motorola
		54LS86	National
		54LLS86	Signetics
		54LS86	TI
Quad 2-Input Exclusive OR Gate	00701	5486	Fairchild
		5486	Motorola
		5486	National
		5486	TI
	02601	54L86	National
	07501	54S86	Signetics
		54S86	TI
Triple 2-Input Exclusive OR/NOR Gate	06005	10507	Motorola

Latches

Description	M38510/	Device	Source
Complementary Output	01501	5475	Motorola
		5475	National
		5475	Signetics
Quad Bistable Latch	31601	54LS75	Motorola
		54LS75	Signetics
		54LS75	TI
	31604	54LS375	Motorola
		54LS375	Signetics
		54LS375	TI
Quad Multifunction Latch	01504	9314	Motorola
Quad NOR R/S Latch	05103	4043A	SSS
Quad Set Reset Latch	31602	54LS279	Fairchild
		54LS279	Motorola
		54LS279	National
		54LS279	TI
8-Bit Addressable Latch	R17601	4099B	RCA
	31603	54LS259	Motorola
8-Bit Latch, Transparent D-Type, Three State	32502	54LS373	Motorola
		54LS373	Signetics
		54LS373	TI
	34601	54F373	Fairchild

Multiplexers

Description	M38510/	Device	Source
Dual 3-Input Multiplexer, Inverting, TS	33910	54F353	Fairchild
Dual 4-Channel Data Selector/Multiplexer	01403	54153	Fairchild
		54153	National
	30902	54LS153	Fairchild
		54LS153	Motorola
		54LS153	National
		54LS153	Signetics
		54LS153	TI
Dual 4-Input Multiplexer	01404	9309	Fairchild
		9309	Signetics
Dual 4-Input Multiplexer, Inverting	33909	54F352	Fairchild
Dual 4-Input Multiplexer, TS	30908	54LS253	Fairchild
		54LS253	Motorola
		54LS253	National
		54LS253	TI
Quad 2-Input Data Selector/Multiplexer (Non-Inverting)	01405	54157	Fairchild
		54157	Motorola
		54157	National
Quad 2-Input Multiplexer, Inverting	07904	54S158	Signetics
	30904	54LS158	Fairchild
		54LS158	Motorola
		54LS158	National
		54LS158	TI
Quad 2-Input Multiplexer, Inverting, TS	30907	54LS258	Fairchild
		54LS258	Motorola
		54LS258	National
		54LS258	Signetics
		54LS258	TI
Quad 2-Input Multiplexer, Non-Inverting	07903	54S157	Signetics
	30903	54LS157	Fairchild
		54LS157	Motorola
		54LS157	National
		54LS157	TI
Quad 2-Input Multiplexer, Non-Inverting, TS	07906	54S257	AMD
	30906	54LS257	Fairchild
		54LS257	Motorola
		54LS257	National
		54LS257	Signetics
		54LS257	TI
Quad 2-Input Multiplexer with Output Register	30909	54LS298	Motorola
Dual 4-Input Multiplexer, Complementary Output	01404	9309	National
Dual 4-Input Multiplexer, Three State	07908	54S253	National
Dual 4-Input Multiplexer	07902	54S153	TI
Quad 2-Input Multiplexer, Inverting	07904	54S158	TI
Hex 2-Input Three-State Multiplexer	37901	54ALS857	TI
8-Channel Data Selector/Multiplexer	01402	9312	Motorola
8-Input Multiplexer	01406	54151	Fairchild
		54151	Motorola
		54151	National

(Continued)

Based on QPL-38510-65, 18 Oct 1985

MILITARY PARTS-QPL Selection Guide (Cont'd)

DIGITAL

Multiplexers (Cont'd)

Description M38510/	Device	Source	Line
8-Input Multiplexer (Cont'd)			
07901	54S151	Signetics	
	54S151	TI	
30901	54LS151	Fairchild	
	54LS151	Motorola	
	54LS151	National	5
	54LS151	TI	
8-Input Multiplexer, Complementary Input, Strobe, TS			
30905	54LS251	Motorola	
	54LS251	National	
	54LS251	TI	
16-Channel Data Selector/Multiplexer			
01401	54150	Motorola	10
	54150	National	

Multivibrators

Description M38510/	Device	Source	Line
Dual Monostable Multivibrator, Retriggerable			
R17504	4098B	RCA	
Dual Monostable Multivibrator, Schmitt Trigger Input			
31402	54LS221	Motorola	
	54LS221	TI	
Dual One Shot Multivibrator			
01205	9602	Fairchild	15
Dual Retriggerable Monostable Multivibrator with Clear			
31401	54LS123	Motorola	
	54LS123	TI	
31403	54LS122	Motorola	
	54LS122	TI	
Monostable Multivibrator			
01201	54121	Fairchild	20
	54121	Motorola	
	54121	Signetics	
One Shot Multivibrator			
01204	9601	Fairchild	
	9601	Motorola	
Retriggerable Monostable Multivibrator with Clear			
01202	54122	Fairchild	25
	54122	Motorola	
01203	54123	Fairchild	
Retriggerable Monostable Multivibrator With Clear			
01203	54123	National	
Retriggerable Monostable Multivibrator with Clear			
01203	54123	Signetics	

Other Devices

Description M38510/	Device	Source	Line
Dual 4-Input NAND Schmitt Trigger			
15101	5413	National	30
31301	54LS13	Motorola	
	54LS13	TI	
Hex Schmitt Trigger, Inverting			
15102	5414	National	
31302	54LS14	Motorola	
	54LS14	Signetics	35
	54LS14	TI	
Octal Bus Driver, Inverting			
32401	54LS240	Motorola	
	54LS240	National	
	54LS240	Signetics	
	54LS240	TI	40
Octal Bus Driver, Inverting, Three State			
33201	54F240	Fairchild	
38301	54ALS240A	TI	
Octal Bus Driver, Non-Inverting, Three State			
32402	54LS241	Motorola	
	54LS241	TI	
32403	54LS244	Motorola	45
	54LS244	TI	
33202	54F241	Fairchild	
33203	54F244	Fairchild	
38302	54ALS241A	TI	
38303	54ALS244A	TI	50
Octal Bus Transceiver, Three State			
32803	54LS245	Motorola	
	54LS245	TI	
Quad Bus Transceiver			
32801	54LS242	Motorola	
	54LS242	TI	
32802	54LS243	Motorola	55
	54LS243	TI	
Quad ECL to TTL Translator			
06302	10525	Motorola	
Quad TTL to ECL OR/NOR Translator			
06301	10524	Motorola	
Quad 2-Input NAND Schmitt Trigger			
15103	54132	Motorola	
31303	54LS132	TI	60
Dual Complementary Pair Plus Inverter			
05351	4007UB	RCA	
Octal Bus Driver, Inverting			
32401	54LS240	Fairchild	
Octal Bus Driver, Non-Inverting, Three State			
32402	54LS241	Signetics	
32403	54LS244	Signetics	
Octal Bus Transceiver, Non-Inverting, Open Collector			
32803	32803	Signetics	65
9-Bit Odd/Even Parity Generator/Checker			
01901	54180	National	
	54180	Signetics	
9-Bit Odd/Even Parity Generator Checker			
32901	54LS280	Motorola	
	54LS280	TI	
9-Bit Odd/Even Parity Generator/Checker			
34901	54F280	Fairchild	70
16-Bit Register File, Simultaneous Read/Write, Open Collector			
31902	54LS170	National	
16-Bit Register File, 4x4, Simultaneous Read/Write, Three-State			
31901	54LS670	National	

MICROPROCESSORS

Description M38510/	Device	Source	Line
Microprocessor			
42001	8080A	Intel	
46501	SBP9989	TI	
52004	Z8002A CPU	Zilog	75
53001	8086	Intel	

INTERFACE

Analog Switches

Description M38510/	Device	Source	Line
SPDT, CMOS			
11602	DG301	Siliconix	
11606	DG305	Siliconix	
SPDT, JFET			
11105	DG187A	Siliconix	
11106	DG188A	Siliconix	80
11105	DG187A	Intersil	
11106	DG188A	Intersil	
Dual 4-Input, Three State Multiplexer			
33908	54F253	Fairchild	
2xDPST, CMOS			
11603	DG302	Siliconix	
11607	DG306	Siliconix	85
2xDPST, JFET			
11103	DG184A	Intersil	
	DG184A	Siliconix	
11104	DG185A	Intersil	
	DG185A	Siliconix	
2xSPDT, CMOS			
11604	DG303	Siliconix	90
11608	DG307	Siliconix	
2xSPDT, JFET			
11107	DG190A	Intersil	
	DG190A	Siliconix	
11108	DG191A	Intersil	
	DG191A	Siliconix	95
2xSPST, CMOS			
11605	DG304	Siliconix	
2xSPST, JFET			
11101	DG181A	Intersil	
	DG181A	Siliconix	
11102	DG182A	Intersil	
	DG182A	Siliconix	100
4xSPST, CMOS			
05801	4016A	Motorola	
	4016A	SSS	
05802	4066A	Motorola	
12302	201	Harris	
4-Channel Multiplexer Differential, Latched			
19008	509	Siliconix	105
8-Channel Multiplexer			
19007	6108	Siliconix	
20602	82S137	Siliconix	
8-Channel Multiplexer, Differential, CMOS			
19003	507	Siliconix	
16-Channel Multiplexer, CMOS			
19001	506	Siliconix	

Digital to Analog Converters

Description M38510/	Device	Source	Line
D/A Converter, 8-Bit			
11301	DAC-08	Raytheon	110
11302	DAC-08A	PMI	
	DAC-08A	Raytheon	
D/A Converter, 12-Bit			
12101	562	AD	
12704	7541	Intersil	

Line Drivers and Receivers

Description M38510/	Device	Source	Line
Differential Line Receiver			
10401	55107	Fairchild	115
	55107	Motorola	
	55107	TI	
10402	55108	TI	
Dual Differential Line Driver			
10403	9614	Fairchild	
	55114	TI	120
Dual Differential Line Driver, Three-State			
10405	55113	TI	
Dual Differential Line Receiver			
10404	9615	Fairchild	
	55115	TI	
Dual 4-Input Positive NAND Line Driver			
08101	54S140	Signetics	

MILITARY PARTS-QPL Selection Guide (Cont'd)

INTERFACE

Line Drivers and Receivers (Cont'd)

Description	M38510/	Device	Source	Line
Memory Driver	13001	55325	TI	
	13002	55326	TI	
	13003	55327	TI	
Dual Peripheral AND Driver	12902	55451	TI	
	12907	55461	TI	5
Dual Peripheral OR Driver	12904	55453	TI	

Memory Drivers

Description	M38510/	Device	Source	Line
Dual 600 mA Sink/Source	55325	13001	TI	
Quad, 600 mA Sink	55326	13002	TI	
	55327	13003	TI	

LINEAR

Amplifiers

Description	M38510/	Device	Source	Line
Dual Operational Amplifier	10102	747	Fairchild	10
		747	National	
		747	Raytheon	
	10105	LH2101A	Raytheon	
		LH2101A	Signetics	
	10106	PM2108A	PMI	15
	10108	1558	Fairchild	
Operational Amplifier	10101	741	Fairchild	
		741	National	
		741	Raytheon	
	10103	LM101A	Fairchild	20
		LM101A	National	
		LM101A	Raytheon	
		LM101A	Signetics	
	10104	LM108A	Fairchild	
		LM108A	LinearTech	25
		LM108A	National	
		LM108A	PMI	
	10107	LM118	LinearTech	
	11402	PM156	National	
		LF156	PMI	30
		PM156	PMI	
	11403	PM157	PMI	
	11405	PM156A	PMI	
	11406	PM157A	PMI	
	11904	LF151	National	35
	12202	HA2600	Harris	
	12203	HA2620	Harris	
	12204	HA2500	Harris	
	12205	HA2510	Harris	
	12206	HA2520	Harris	40
	13101	5534A	Raytheon	
	13501	4021B	PMI	
		OP-07A	PMI	
	13503	OP-07	PMI	
Quad Operational Amplifier	11001	LM148	Fairchild	45
		LM148	Raytheon	

(Continued)

Description	M38510/	Device	Source	Line
Quad Operational Amplifier (Cont'd)				
	11003	HA4741	Harris	
		4156	Raytheon	
	11004	4136	Fairchild	
		4136	PMI	50
		4136	Raytheon	
	11005	LM124	Fairchild	
Dual Operational Amplifier	11905	772	National	
	13102	5532A	Raytheon	
Quad Operational Amplifier	11001	LM148	National	55
	11005	LM124	National	
		LM124	Raytheon	

Comparators

Description	M38510/	Device	Source	Line
Dual Voltage Comparator	10305	LH2111	AMD	
		LH2111	Raytheon	
Quad Voltage Comparator	11201	139	AMD	60
		139	Fairchild	
		139	Raytheon	
Voltage Comparator	10301	710	Fairchild	
	10304	111	Fairchild	
		111	National	65
		111	Raytheon	
Dual Voltage Comparator	10302	711	Fairchild	
	10305	LH2111	Fairchild	
	11202	LM193	National	

Timers

Description	M38510/	Device	Source	Line
Dual Timer	10902	556	Signetics	70
Timer	10901	555	Fairchild	
		555	Signetics	

Voltage Regulators

Description	M38510/	Device	Source	Line
Voltage Regulator	10201	LM723	Fairchild	
	10701	LM109	Fairchild	
	10702	78M05	Fairchild	75
	10703	78M12	Fairchild	
	10704	78M15	Fairchild	
	10706	7805	Fairchild	
	10707	7812	Fairchild	
	10708	7815	Fairchild	80
	10709	7824	Fairchild	
	11501	79M05	Fairchild	
	11502	79M12	Fairchild	
	11503	79M15	Fairchild	
	11505	7905	Fairchild	85
	11506	7912	Fairchild	
	11507	7915	Fairchild	
	11703	LM117H	National	

Other Devices

Description	M38510/	Device	Source	Line
Voltage Reference	12801	584S	AD	

Transistor Arrays

Description	M38510/	Device	Source	Line
Transistor Array	10802	3045	Fairchild	90

MEMORY

PROMs

Description	M38510/	Device	Source	Line
PROM, 512x4, OC	20401	82S130	Signetics	
PROM, 512x4, TS	20402	HM7621-2	Harris	
		82S131	Signetics	
32x8, OC	20701	82S23	Signetics	
32x8, TS	20702	HM7603-2	Harris	95
		54S288	National	
		82S123	Signetics	
64x8 PROM	20101	HYPROM512	Harris	
256x4, OC	20301	82S126	Signetics	
256x4, TS	20302	HM7611-2	Harris	100
		5301-1	MMI	
		54S287	National	
		82S129	Signetics	
512x4, TS	20402	54S571	National	
512x8, TS	20802	HM7641-2	Harris	105
		54S474	National	
		82S141	Signetics	
	20803	82S115	Signetics	
1024x4	20602	5353-1	MMI	
1024x4, TS	20602	HM7643-2	Harris	110
		54S573	National	
		82S137	Signetics	
1024x8, TS	20904	27S181	AMD	
		7681	Harris	
		77S181	National	115
		29631	Raytheon	
		82S181	Signetics	
	20905	82S2708	Signetics	
2048x4	20902	7685	Harris	
		77S185	National	120
		29651	Raytheon	
		82S185	Signetics	
2048x4, TS	20908	53S841	MMI	
2048x8	21002	77S191	AMD	
2048x8, TS	21002	82S191	Signetics	125
	21004	93Z511	Fairchild	
2048x8,TS	21002	76161	Harris	
		77S191	National	
		29681	Raytheon	

Based on QPL-38510-65, 18 Oct 1985

MILITARY PARTS–QPL Selection Guide (Cont'd)

MEMORY

RAMs

Description	M38510/	Device	Source
256x4, TS			
	23110	93422(60ns)	Fairchild
	23112	93L422 (75 ns)	Fairchild
	23114	93422A(45ns)	Fairchild
	23115	93L422A (55 ns)	Fairchild
1024x1, OC			
	23103	93L415 (60 ns)	Fairchild
1024x1, TS			
	23102	93425 (60 ns)	Fairchild
	23104	93L425 (70 ns)	Fairchild
	23108	93425A (45 ns)	Fairchild
	23113	93L425A(50ns)	Fairchild
1024x4, TS			
	23806	2148H	Intel
	24502	HM6514	Harris
4096x1, TS			
	23801	2147H (85 ns)	Intel
	23803	2147H (70 ns)	Intel
	23805	2147H (55 ns)	Intel
	23807	2147H (45 ns)	Intel
	24501	6504	Harris
16384x1, TS			
	24001	4116 (200 ns)	Mostek
	24002	4116 (250 ns)	Mostek
65536x1, TS			
	24402	4564	Mostek

Shift Registers

Description	M38510/	Device	Source
Dual 4-Bit Static S.R.			
	05703	4015A	Motorola
		4015A	National
		4015A	RCA
		4015A	SSS
Dual 8-Bit S.R.			
	15902	9328	Motorola
4x4 Register File, TS			
	31901	54LS670	Motorola
4-Bit Parallel Access S.R.			
	00901	5495	Motorola
		5495	National
	00906	54195	Motorola
	02801	54L95	National
	30603	54LS95	Fairchild
		54LS95	Motorola
		54LS95	TI
4-Bit Parallel In, Parallel Out, Cascadable S.R.			
	30607	54LS395	TI
4-Bit Parallel In, Parallel Out, Right/Left S.R.			
	30606	54LS295	Signetics
		54LS295	TI
4-Bit Parallel In, Parallel Out, S.R.			
	30602	54LS195	Motorola
		54LS195	Signetics
		54LS195	TI
4-Bit Universal Bidirection S.R.			
	07601	54S194	AMD
4-Bit Universal Bidirectional S.R.			
	30601	54LS194	Fairchild
		54LS194	Motorola
		54LS194	TI
4-Bit Universal S.R.			
	00905	54194	Motorola
		54194	National
		54194	Signetics
5-Bit S.R.			
	00902	5496	Motorola
		5496	National
	30604	54LS96	TI
8-Bit Parallel In, Serial Out, S.R., Synchronous			
	05752	4014B	RCA
8-Bit Parallel In, Serial Out, S.r., Synchronous or Asynchronous			
	05754	4021B	RCA
8-Bit Parallel Load S.R., Complementary Outputs			
	30608	54LS165	Motorola
		54LS165	TI
8-Bit Parallel-In, Serial-Out S.R.			
	30609	54LS166	Motorola
		54LS166	TI
8-Bit Parallel-Serial S.R.			
	00904	54165	Motorola
8-Bit Serial In, Parallel Out, S.R.			
	30605	54LS164	Motorola
		54LS164	National
		54LS164	Signetics
		54LS164	TI
8-Bit Serial-In Parallel-Out S.R.			
	00903	54164	National
		54164	Signetics
8-Bit Static S.R. Asynchronous			
	05704	4021A	Motorola
		4021A	National
		4021A	RCA
		4021A	SSS
18-Bit Static S.R.			
	05701	4006A	Motorola
		4006A	National
		4006A	RCA
18-Bit Static S.R. (Synchronous)			
	05702	4014A	Motorola
		4014A	National
		4014A	RCA
64-Bit Static S.R.			
	05705	4031A	National
		4031A	RCA

Programmable Logic

Description	M38510/	Device	Source
PAL			
	50302	PAL12H6	MI not on file
	50303	PAL14H4	MMI
	50306	PAL10L8	MMI
	50307	PAL12L6	MMI
	50308	PAL14L4	MMI
	50404	PAL16R4	MMI

SECTION	PRODUCTS IN SECTION
Digital	Arithmetic functions, buffers/inverters, counters, decoders, drivers, flip-flops, gates, latches, memories, multiplexers, multivibrators, oscillators/dividers, shift registers, translators.
Military	Military-commercial and commercial-military cross-references; QPL-38510/xx list; military ICs.
Microprocesser	Microprocessors, microcomputers, and microprocessor system components.
Microprocessor Development Systems	Systems covered range from simple, single-user, text-editing stations to multi-user computers dedicated to software development.
Microcomputer Support Boards	Boards with functions and peripheral controllers.
Interface	Analog switches, analog-to-digital converters, digital-to-analog converters, display converters, display drivers, error checking circuits, keyboard encoders-decoders, drivers, sense amplifiers, and transmitters/receivers.
Linear	Special-purpose amplifiers, arrays, comparators, consumer circuits, followers, operational amplifliers, phase locked loop circuits, telecommunication circuits, timers, voltage regulators, and special functions.
Memory	Character generators, code converters, FIFOs, LIFOS, E²PROMs, PROMs, RAMs, ROMs and shift registers.
Custom/ Semicustom	Custom/Semicustom linear and digital gate arrays, standard cells, programmable logic arrays (PLAs), and all compatible design tools.
Design Automation	Design Automation interrelated tables showing relationships among workstations, computers, software, semicustom manufacturers and CAE/CAD providers.
SMD Packages	Surface Mount Directory from base device numbers to surface mount packages and suppliers.
Alternate Source Directory	Alternate Source Directory... Industry-wide alternate source cross reference pin-for-pin and functional equivalents to available ICs.

A good design

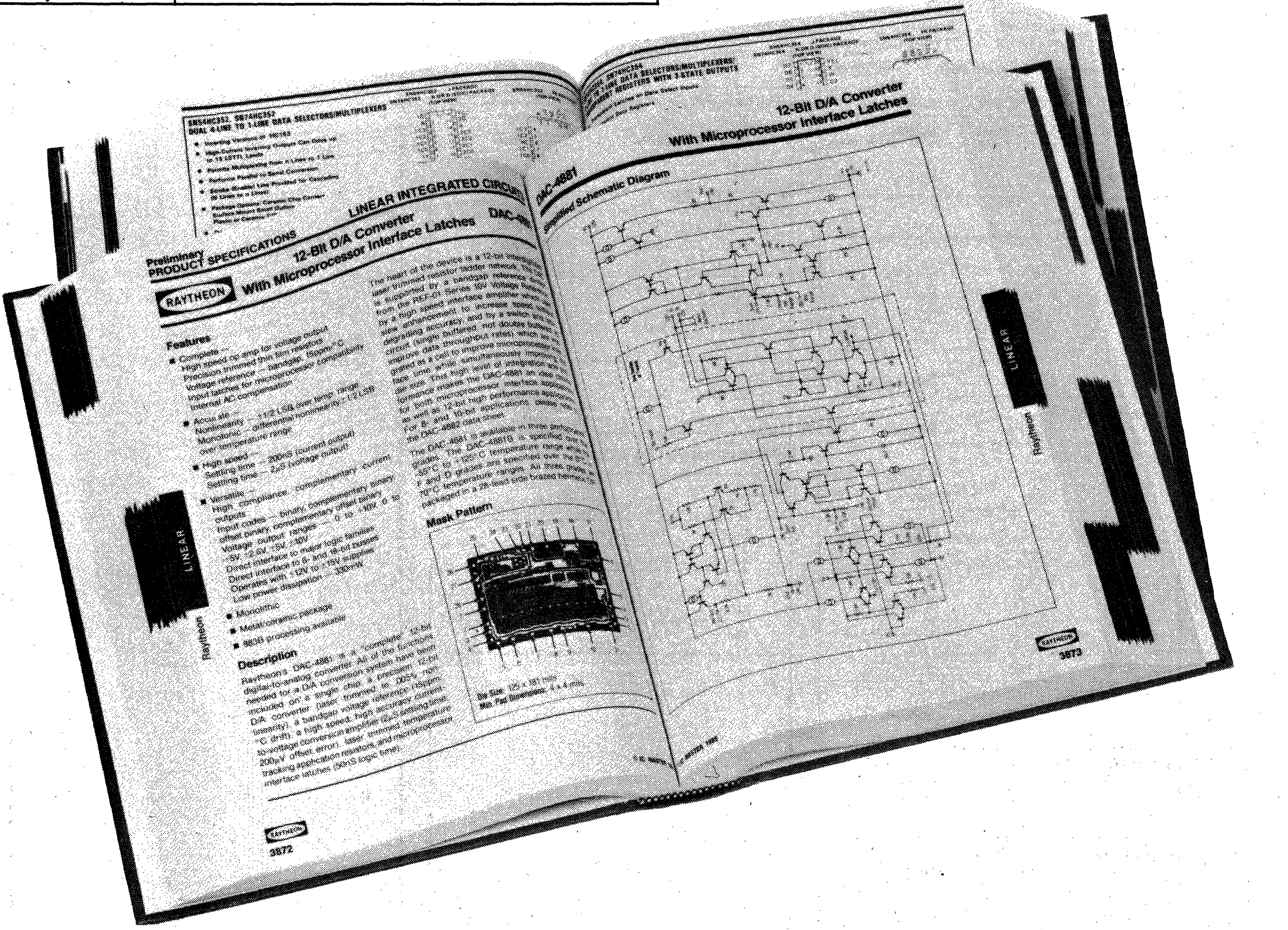
LINEAR INTEGRATED CIRCUITS
Preliminary PRODUCT SPECIFICATIONS
12-Bit D/A Converter With Microprocessor Interface Latches
DAC-4881
RAYTHEON
Features
Description
Mask Pattern
LINEAR
Raytheon
3872
Simplified Schematic Diagram
12-Bit D/A Converter With Microprocessor Interface Latches
LINEAR
Raytheon
3873

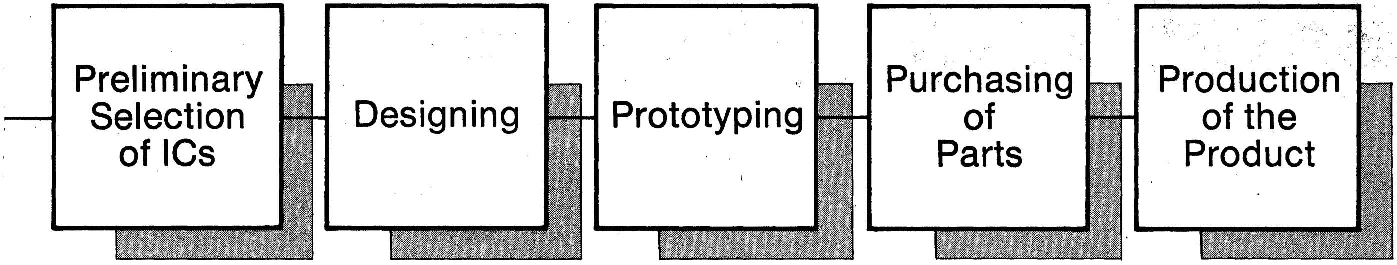

is “mastered” early.

The best time for an engineer to pick the integrated circuits that will go into his next design is at an early stage in the design process when the engineer's plans are still flexible enough to take full advantage of the features selected.

There is a point in the early phases of every design when engineers focus on selecting integrated circuits. They examine specifications, weigh relative strengths and weaknesses of various devices, and choose the field of candidates. This critical time in the design cycle when designers want to be sure the right devices are in serious contention for their applications.

This is when the engineer reaches into his technical reference library. Of the material on his shelves, **IC MASTER** is the only reference source that has been especially prepared for this moment.

The engineer can look up each precise function that he needs and see all of the devices—and their manufacturers—that might satisfy his requirements. He sees this information for all manufacturers, not just for advertisers. But if an IC maker has chosen to include technical data for his products in **IC MASTER**, the engineer sees each index listing for that manufacturer in **bold face type** accompanied by the **page number** on which the data appears; the engineer can then turn immediately to the advertiser's technical data to see if the device fits his needs.

Next time, begin with the MASTER. . .where engineering design begins!

IC MASTER

WHAT'S NEW IN IC Updates

DON'T MISS THE IC UPDATES

The updates
keep your IC Master
current the year 'round.

Look for them in the
SPRING, SUMMER
and **FALL**

and remember our year 'round
immediate response system
toll free number for up-to-date
product information: **800
443-0100
(EXT.) 518**

IC MASTER BELONGS ON YOUR BOOKSHELF

If you don't have your own IC MASTER, you can obtain your own copy by ordering now. Write for your own copy or order by telephone as described below.

IC MASTER is a two-volume set of technical data carefully organized to direct the engineer to the integrated circuits and related products that are closest to his specific needs. It is the surest way to find the optimum device to answer an engineering design requirement. By ordering now, you won't have to borrow or search for IC MASTER the next time you need it.

Typical Use of IC MASTER

Can an engineer find out who makes a 256K dynamic RAM with an access time of 120 nanoseconds or faster in less than 30 seconds?
He can if he turns to the Memory section of IC MASTER and looks for the 256K organization (words and bits per word) that he needs.
Because each device is listed in order of access time, he can easily determine the devices that satisfy his speed requirements.

In the United States only:

You can order IC MASTER simply by charging it to your VISA or Master Card credit card. To place your order (USA only) call now: (408) 249-6800/ (516) 227-1300. To order outside the USA, see list of authorized IC MASTER distributors on page 1471 of Vol. I.

ORDER YOUR COPY NOW

WHAT'S NEW IN IC MASTER

DON'T MISS THE EXPANDED CUSTOM/ SEMICUSTOM IC SECTION

Lists software design tools available for Programmable Logic Devices, Gate Arrays, Standard Cells, and Linear and Linear/ Digital Arrays. Major macros in VLSI/LSI Macrocell Libraries are listed by source.

Volume II, page 4401

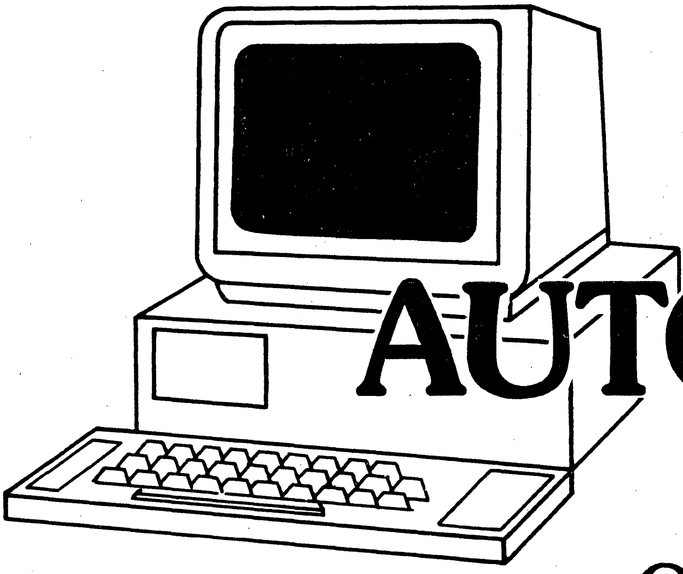

DON'T MISS THE NEW DESIGN AUTOMATION IC SECTION

Quick and easy way to determine relationships between workstations, computers, software, semicustom manufacturers and CAE/CAD providers.

Volume II, page 4901

NEW-RECEIVE DATA FAST!

Dear IC MASTER User:

ANNOUNCING . . . A **new**, innovative way to request and receive up-to-date IC product data.

The IC MASTER introduces an IMMEDIATE response system. Operational **24 hours a day, 7 days a week,** you can now phone in your requests for the most current IC product data available from IC manufacturers who have product data sheets in the IC MASTER, at no cost to you. Here's all you do:

Step 1 **Phone** 800-443-0100 and ask for Extension #518

Step 2 When asked, simply tell the operator the name(s) of the manufacturer whose part you are interested in . . . the **specific** part number you want information on . . . if you want a data sheet and/or an application note . . . and if you want a salesperson to call.

Step 3 Provide your name, title, company, address, and phone number.

That's all you do! We do the rest. Your request will be in the hands of the company you inquired about within 24 hours. We will follow up within a week to make sure your request was expedited and your needs were met.

It's important to us that we provide you with the best source of up-to-date IC product data available in the market . . . we've been doing it for over ten years, and we aren't stopping now.

We hope this **added new** service will contribute to a further reduction in your IC selection time.

800-443-0100 518 EXT.

ADVERTISERS' PRODUCT INDEX

Device	Page-Line
-25	★ 4338
	4118-20
	★ 4335
	4117-99
764A-17	★ 4335
	4117-100
764A-2	★ 4335
	4118-2
AM2764A-20	★ 4335
	4118-3
AM2764A-25	★ 4335
	4118-21
AM2764A-3	★ 4335
	4118-39
AM2764A-30	★ 4335
	4118-40
AM2764A-4	★ 4335
	4118-61
AM2802C	4143-7
AM2802M	4143-8
AM2803C	4143-13
AM2803M	4143-14
AM2804C	4143-17
AM2804M	4143-18
AM2809C	4146-51
AM2809M	4146-49
AM2812AC	4108-20
AM2812AL	4108-21
AM2812C	4108-17
AM2812L	4108-18
AM2813AC	4108-25
AM2813AL	4108-26
AM2813C	4108-22
AM2813L	4108-23
AM2833C	4146-72
AM2833M	4146-73
AM2841A	4108-41
AM2841C	4108-36
AM2841M	4108-37
AM2847C	4146-40
AM2847M	4146-37
AM2855	4146-52
AM2856	4146-59
AM2857C	4146-62
AM29LS18	★ 1813
	855-182
AM29L509	846-2
AM29L509	1642-126
AM29L510	846-7
AM29L510	1642-128
AM29L516	★ 1001
	845-167
	★ 1001
AM2903	★ 1802
	1607-5
2903AC	★ 1802
	1642-45
AM2903AM	★ 1802
	1642-46
2903C	★ 1802
	846-22
	★ 1802
	1642-47
AM2903M	★ 1802
	846-23
	★ 1802
	1642-48
AM2904C	★ 1804
	1642-92
AM2904M	★ 1804
	1642-93
AM2905C	★ 1805
	3179-50
	★ 1805
	1642-55
AM2905M	★ 1805
	3179-43
	★ 1805
	1642-56
AM2906C	★ 1805
	3179-51
	★ 1805
	1642-57
AM2906M	★ 1805
	3179-44
	★ 1805
	1642-58
AM2907C	★ 1805
	3179-48
	★ 1805
	1642-59
AM2907M	★ 1805
	3179-41
	★ 1805
	1642-60
AM2908C	★ 1806
	3179-49
AM2908M	★ 1806
	3179-42
AM2909A	★ 1807
	877-26
AM2909AC	★ 1807
	1642-114
AM2909C	★ 1807
	877-27
	★ 1807
	1642-115
AM2909M	★ 1807
	877-28
AM2910C	★ 1808
	1656-43
AM2910M	★ 1808
	1656-44
AM2911A	★ 1807
	877-29
	★ 1807
	1642-116
	★ 1807
	877-30
	★ 1807
	877-31
	★ 1823
	1656-49
	★ 1824
	1635-23
	¶ 362-8
	¶ 370-16
	★ 1809
	3178-64
	★ 1809
	1642-61
	★ 1809
	3178-65
	1809
	878-176
	374-6
	1809
	1642-140
	1809
	878-177
AM2914C	1661-124
	¶ 374-6
AM2914M	★ 1810
	1642-138
	1661-125
AM2915AC	★ 1811
	3178-45
	★ 1811
	1642-62
AM2915AM	★ 1811
	3178-21
	★ 1811
	1642-63
AM2916AC	★ 1811
	3178-47
	★ 1811
	1642-64
AM2916AM	★ 1811
	3178-22
	★ 1811
	1642-65
AM2917AC	★ 1812
	3178-48
	★ 1812
	1642-66
AM2917AM	★ 1812
	3178-23
	★ 1812
	1642-67
AM2918C	★ 1813
	855-177
	★ 1813
	1643-15
AM2918M	★ 1813
	855-178
	★ 1813
	1643-16
AM2919C	★ 1813
	855-45
	★ 1813
	1643-10
AM2919M	★ 1813
	855-46
	★ 1813
	1643-11
AM2920C	★ 1814
	856-128
	★ 1814
	1643-22
AM2920M	★ 1814
	856-129
	★ 1814
	1643-23
AM29203	★ 1802
	846-24
	★ 1802
	1607-6
AM2921C	★ 1814
	852-131
	★ 1814
	1643-36
AM2921M	★ 1814
	852-132
	★ 1814
	1643-37
AM2922C	★ 1815
	870-13
	★ 1815
	1643-52
AM2922M	★ 1815
	870-14
	★ 1815
	1643-53
AM2923C	★ 1815
	870-57
	★ 1815
	1643-54
AM2923M	★ 1815
	870-58
AM2924C	★ 1816
	853-163
	★ 1816
	1642-79
AM2924M	★ 1816
	853-164
AM2925C	★ 1816
	1642-76
AM2925M	★ 1816
	1642-77
AM2926C	★ 1817
	1643-8

CTI'S QUICK SELECTION GUIDE FOR MIL-STD-1553.

CTI has long been recognized as a specialist in designing and producing hi-rel microcircuits for the military. We're now a major supplier of standard bus circuits for MIL-STD-1553, with products in use in most major military and space programs (F-18, A-10, LAMPS, and many more). Call or write for details to Circuit Technology Inc., 160 Smith Street, Farmingdale, NY 11735 516/293-8686.

CTI

Circuit Technology Inc.

The military Standard in microelectronics.

	MIL-STD-1553B	MIL-STD-1553A	MAC AIR	SINGLE TRANSCEIVER	DUAL TRANSCEIVER	DRIVER ONLY	RECEIVER ONLY	OPERATES FROM ± 15V	OPERATES FROM ± 12V	REQUIRES + 5V	INVERTED OUTPUT AVAILABLE	BUS CONTROLLER	REMOTE TERMINAL	MONITOR	SINGLE CHANNEL	DUAL REDUNDANT	HYBRID CIRCUIT PACKAGE	LCC PACKAGE(S)	PLUG IN PACKAGE	FLAT PACK AVAILABLE	ENCODE, DECODE PROTOCOL	PROGRAMMABLE	FULL MIL-STD-1553B PROTOCOL	8 & 16 BIT COMPATIBLE	FIFO BUFFER	MIL-STD-1750A & µP COMPATIBLE	BUFFERED OUTPUTS	TX STROBE OUTPUT
RECEIVERS / TRANSMITTERS																												
CT1487 Series	●	●		●				●		●	●				●		●		●	●								
CT1487 D Series	●	●			●			●		●	●					●	●		●	●								
CT1589 Series	●	●		●					●	●	●				●		●		●	●								
CT1589 D Series	●	●			●				●	●	●					●	●		●	●								
CT2077		●	●			●		●		●					●		●			●								
CT3077		●	●			●			●	●					●		●			●								
CT3078 A	●	●	●				●	●	●	●					●		●			●								
CT3231 Series	●	●		●				●	●	●					●		●		●	●								
CT3232 Series	●	●	●	●				●	●	●					●		●		●	●								
DATA BIT PROCESSORS																												
CT1555 Series	●	●								●		●	●	●	●		●			●	●	●		●				
CT1608	●	●	●	●				●	●	●		●	●	●	●		●		●	●	●	●		●				
PROTOCOL PROCESSORS																												
CT1560	●									●			●	●	●			●	●				●					
CT1561	●									●			●	●		●		●	●				●					
CT1562	●									●		●	●	●	●			●	●				●					
CT1563	●									●		●	●	●		●		●	●				●					
CT1601	●									●		●	●	●	●	●		●	●				●					
CT1602	●									●		●	●	●		●	●		●	●			●				●	
CT1603	●									●		●	●	●	●		●		●	●			●				●	
CT1604	●									●			●	●		●	●		●	●							●	
CT1605	●									●			●	●	●		●		●	●							●	
CT1606	●									●			●	●	●	●	●		●				●				●	
CT1610	●									●		●	●	●	●	●	●		●	●			●					
CT1612	●									●		●	●	●	●	●	●		●	●		●	●					
CT1615	●									●		●	●	●		●	●		●				●				●	●
CT1617	●		●	●	●			●	●	●		●	●	●	●	●							●				●	
MIL-STD-1553 µP INTERFACE CIRCUITS																												
CT1611	●									●		●	●	●	●	●	●		●	●		●	●	●	●	●		

NOW: RECEIVE DATA FAST! 800 443-0100 518 EXT.

Dear IC MASTER User:

ANNOUNCING . . . A **new,** innovative way to request and receive up-to-date IC product data.

The IC MASTER introduces an IMMEDIATE response system. Operational **24 hours a day, 7 days a week,** you can now phone in your requests for the most current IC product data available from IC manufacturers who have product data sheets in the IC MASTER, at no cost to you. Here's all you do:

Step 1 **Phone 800-443-0100** and ask for Extension #518

Step 2 When asked, simply tell the operator the name(s) of the manufacturer whose part you are interested in . . . the **specific** part number you want information on . . . if you want a data sheet and/or an application note . . . and if you want a salesperson to call.

Step 3 Provide your name, title, company, address, and phone number.

That's all you do! We do the rest. Your request will be in the hands of the company you inquired about within 24 hours.

We will follow up within a week to make sure your request was expedited and your needs were met.

It's important to us that we provide you with the best source of up-to-date IC product data available in the market . . . we've been doing it for over ten years, and we aren't stopping now.

We hope this **added new** service will contribute to a further reduction in your IC selection time.

Hi-Rel Digital Products

Table of Contents

Ordering Codes 604
Process Flow MIL-M-38510 (JAN) 605
Process Flow MIL-STD-883 (QB) 606
MIL-M-38510 (JAN) 607
  FAST™ (54F) 607
  Low Power Schottky (54LS) 607
  Standard TTL (54XX) 609
  TTL (9300) 609
  TTL (9600) 609
  DTL (930) 609
MIL-STD-883 (QB) 610
  FAST™ (54F) 610
  Low Power Schottky (54LS) 612
  Low Power Schottky (96LS) 615
  ECL (10K) 615
  Standard TTL (54XX) 616
  TTL (9300) 617
  TTL (9600) 617
  Low Power TTL (93L, 96L) 618
  DTL (930, 90XX, 91XX) 618
JAN Cross Reference Guide 619

FAST (Fairchild Advanced Schottky TTL) is a trademark of Fairchild Semiconductor Corporation

ORDERING CODES

MIL-STD-883 (QB) Example

54F240 D M QB

- 54F240 — Basic Device Type
- D — Package Code
  - D = Ceramic Dual In-Line
  - F = Ceramic Flat Pack
  - L1 = Ceramic Leadless Chip Carrier*
- M — Military Temperature Range: −55° to +125°C
- QB — MIL-STD-883 Level B Process Flow

*NOTE: 14, 16 and 20-pin devices are supplied in 20-terminal square leadless chip carriers.

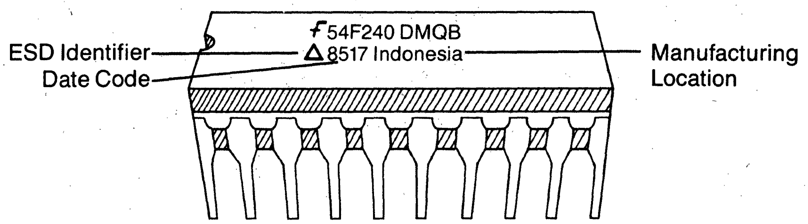
54F240 DMQB
△ 8517 Indonesia
ESD Identifier
Date Code
Manufacturing Location

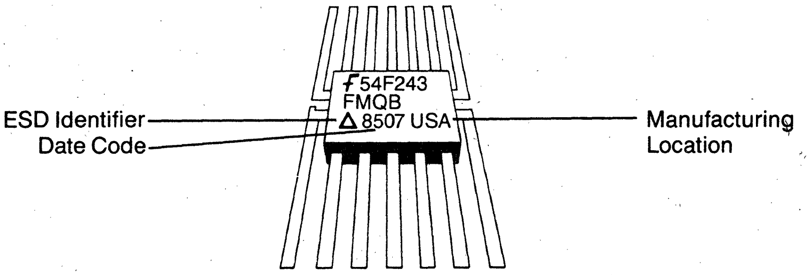
54F243
FMQB
△ 8507 USA
ESD Identifier
Date Code
Manufacturing Location

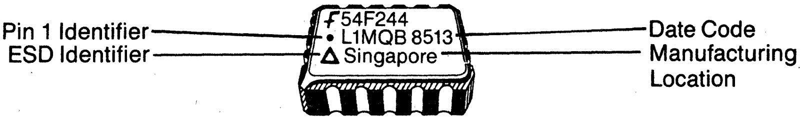
54F244
• L1MQB 8513
△ Singapore
Pin 1 Identifier
ESD Identifier
Date Code
Manufacturing Location

Process Flow
MIL-M-38510 (JAN)

PROCESS STEP	METHOD	CONDITION	REQUIREMENT
Internal Visual	2010	B	100%
Stabilization Bake	1008	C, 24 Hr. Min.	100%
Temperature Cycle	1010	C, 10 Cycles	100%
Constant Acceleration	2001	E, Y1 Axis	100%
Fine Leak	1014	B	100%
Gross Leak	1014	C	100%
Interim Electrical	5005	Slash Sheet	100%
Burn-in	1015	D, 125°C Min.	100%
PDA		DC 25°C, 5% Max.	
FINAL ELECTRICAL			
DC +25°C*	5005	Slash Sheet	100%
DC +125°C*	5005	Slash Sheet	100%
DC −55°C*	5005	Slash Sheet	100%
AC +25°C	5005	Slash Sheet	100%
GROUP A			
DC +25°C*	5005	Slash Sheet	2% LTPD
DC +125°C*	5005	Slash Sheet	3% LTPD
DC −55°C*	5005	Slash Sheet	5% LTPD
AC +25°C	5005	Slash Sheet	2% LTPD
AC +125°C	5005	Slash Sheet (if req'd)	3% LTPD
AC −55°C	5005	Slash Sheet (if req'd)	5% LTPD
Mark		JAN Format	
Fine Leak	1014	B	5% LTPD
Gross Leak	1014	C	5% LTPD
External Visual	2009		100%
Groups B,C,D	5005	JAN Data	Sampled

*Includes Functional

Process Flow
MIL-STD-883 (QB)

PROCESS STEP	METHOD	CONDITION	REQUIREMENT
Internal Visual	2010	B	100%
Stabilization Bake	1008	C Min., 24 Hr. Min.	100%
Temperature Cycle	1010	C, 10 Cycles	100%
Constant Acceleration	2001	E, Y1 Axis	100%
Fine Leak	1014	B	100%
Gross Leak	1014	C	100%
Interim Electrical	5005	Fairchild Table 1	100%
Burn-in	1015	C, 125°C Min.	100%
PDA		DC 25°C, 5% Max.	
FINAL ELECTRICAL			
DC +25°C*	5005	Fairchild Table 1	100%
DC +125°C*	5005	Fairchild Table 1	100%
DC −55°C*	5005	Fairchild Table 1	100%
AC +25°C	5005	Fairchild Table 1	100%
GROUP A			
DC +25°C*	5005	Fairchild Table 1	2% LTPD
DC +125°C*	5005	Fairchild Table 1	3% LTPD
DC −55°C*	5005	Fairchild Table 1	5% LTPD
AC +25°C	5005	Fairchild Table 1	2% LTPD
AC +125°C	5005	Fairchild Table 1 (if req'd)	3% LTPD
AC −55°C	5005	Fairchild Table 1 (if req'd)	5% LTPD
Mark		Basic Format	
Fine Leak	1014	B	5% LTPD
Gross Leak	1014	C	5% LTPD
External Visual	2009		100%
Groups B,C,D	5005	Generic Data	Sampled

*Includes Functional

MIL-M-38510 (JAN)

FAIRCHILD
A Schlumberger Company

FAST™ (54F)

				Packaging	
Device	**38510/**	**Pin**	**Description**	**DIP**	**Flat Pack**
54F00	33001	14	Quad 2-Input NAND Gate	BCA	BAA
54F02	33301	14	Quad 2-Input NOR Gate	BCA	BAA
54F04	33002	14	Hex Inverter	BCA	BAA
54F08	34001	14	Quad 2-Input AND Gate	BCA	BAA
54F10	33003	14	Triple 3-Input NAND Gate	BCA	BAA
54F11	34002	14	Triple 3-Input AND Gate	BCA	BAA
54F20	33004	14	Dual 4-Input NAND Gate	BCA	BAA
54F32	33501	14	Quad 2-Input OR Gate (4-2-3-2-Input)	BCA	BAA
54F64	33401	14	AND/OR—Invert Gate	BCA	BAA
54F74	34101	14	Dual D-Type Positive Edge-Triggered Flip-Flop	BCA	BAA
54F109	34102	16	Dual J$\overline{K}$ Positive Edge-Triggered Flip-Flop	BEA	BFA
54F138	33701	16	1-of-8 Decoder/Demultiplexer	BEA	BFA
54F139	33702	16	Dual 1-of-4 Decoder	BEA	BFA
54F153	33902	16	Quad 4-Input Multiplexer	BEA	BFA
54F175	34104	16	Quad D Flip-Flop	BEA	BFA
54F240	33201	20	Octal Buffer/Line Driver (w/3-State Outputs)	BRA	
54F241	33202	20	Octal Buffer/Line Driver (w/3-State Outputs)	BRA	
54F244	33203	20	Octal Buffer/Line Driver (w/3-State Outputs)	BRA	
54F253	33908	16	Dual 4-Input Multiplexer (w/3-State Outputs)	BEA	BFA
54F280	34901	14	9-Bit Parity Generator/Checker	BCA	BAA
54F283	34201	16	4-Bit Binary Full Adder (w/Fast Carry)	BEA	BFA
54F352	33909	16	Dual 4-Input Multiplexer	BEA	BFA
54F353	33910	16	Dual 4-Input Multiplexer (w/3-State Outputs)	BEA	BFA
54F373	34601	20	Octal Transparent Latch (w/3-State Outputs)	BRA	
54F374	34105	20	Octal D Transparent Latch (w/3-State Outputs	BRA	
54F398	35001	20	Quad 2-Port Register	BRA	
54F399	35002	16	Quad 2-Port Register	BEA	BFA
54F521	34701	20	8-Bit Identity Comparator	BRA	
54F533	34602	20	Octal Transparent Latch (w/3-State Outputs)	BRA	

Low Power Schottky (54LS)

				Packaging	
Device	**38510/**	**Pin**	**Description**	**DIP**	**Flat Pack**
54LS00	30001	14	Quad 2-Input NAND Gate	BCA	BAA
54LS02	30301	14	Quad 2-Input NOR Gate	BCA	BAA
54LS03	30002	14	Quad 2-Input NAND Gate (OC)* Output	BCA	BAA
54LS04	30003	14	Hex Inverter	BCA	BAA
54LS05	30004	14	Hex Inverter (OC)* Output	BCA	BAA
54LS08	31004	14	Quad 2-Input AND Gate	BCA	BAA
54LS10	30005	14	Triple 3-Input NAND Gate	BCA	BAA
54LS11	31001	14	Triple 3-Input AND Gate	BCA	BAA

*(OC) = Open Collector

Low Power Schottky (54LS)

Device	38510/	Pin	Description	Packaging DIP	Packaging Flat Pack
54LS20	30007	14	Dual 4-Input NAND Gate	BCA	BAA
54LS21	31003	14	Dual 4-Input Positive AND Gate	BCA	BAA
54LS22	30008	14	Dual 4-Input NAND Gate (OC)* Output	BCA	BAA
54LS27	30302	14	Triple 3-Input NOR Gate	BCA	BAA
54LS30	30009	14	8-Input NAND Gate	BCA	BAA
54LS32	30501	14	Quad 2-Input OR Gate	BCA	BAA
54LS42	30703	16	1-of-10 Decoder	BEA	BFA
54LS51	30401	14	3-Input Dual AOI Gate	BCA	BAA
54LS54	30402	14	4-Wide 2-Input AND-OR-Invert Gate	BCA	BAA
54LS74	30102	14	Dual D Positive Edge-Triggered Flip-Flop	BCA	BAA
54LS83A	31201	16	4-Bit Binary Full Adder (w/Fast Carry)	BEA	BFA
54LS85	31101	16	4-Bit Magnitude Comparator	BEA	BFA
54LS95	30603	14	4-Bit Right/Left Shift Register	BCA	BAA
54LS109	30109	16	Dual JK̄ Positive Edge-Triggered Flip-Flop	BEA	BFA
54LS112	30103	16	Dual JK Edge-Triggered Flip-Flop	BEA	BFA
54LS113	30104	14	Dual JK Edge-Triggered Flip-Flop	BCA	BAA
54LS114	30105	14	Dual JK Negative Edge-Triggered Flip-Flop (w/Common Clocks & Clears)	BCA	BAA
54LS138	30701	16	1-of-8 Decoder/Demultiplexer	BEA	BFA
54LS139	30702	16	Dual 1-of-4 Decoder	BEA	BFA
54LS151	30901	16	8-Input Multiplexer	BEA	BFA
54LS153	30902	16	Dual 4-Input Multiplexer	BEA	BFA
54LS157	30903	16	Quad 2-Input Multiplexer	BEA	BFA
54LS158	30904	16	Quad 2-Input Multiplexer	BEA	BFA
54LS174	30106	16	Hex D Flip-Flop	BEA	BFA
54LS175	30107	16	Quad D Flip-Flop	BEA	BFA
54LS193	31508	16	Up/Down Binary Counter	BEA	BFA
54LS194	30601	16	4-Bit Bidirectional Universal Shift Register	BEA	BFA
54LS240	32401	20	Octal Inverting Bus/Line Driver	BRA	
54LS253	30908	16	Dual 4-Input Multiplexer	BEA	BFA
54LS257A	30906	16	Quad 2-Input Multiplexer (w/3-State Outputs)	BEA	BFA
54LS258	30907	16	Quad 2-Input Multiplexer (w/3-State Outputs)	BEA	BFA
54LS266	30303	14	Quad 2-Input Exclusive-NOR Gate (OC)* Output	BCA	BAA
54LS279	31602	16	Quad Set/Reset Latch	BEA	BFA
54LS283	31202	16	4-Bit Binary Full Adder	BEA	BFA
54LS365A	32201	16	Hex 3-State Buffer (w/Common 2-Input NOR Enable)	BEA	BFA
54LS366A	32202	16	Hex 3-State Inverter (w/Common 2-Input NOR Enable)	BEA	BFA
54LS367A	32203	16	Hex 3-State Buffer (w/Separate 4-Bit and 2-Bit Sections)	BEA	BFA
54LS368A	32204	16	Hex 3-Input Inverter (w/Separate 4-Bit and 2-Bit Sections)	BEA	BFA

*(OC) = Open Collector

MIL-M-38510 (JAN)

FAIRCHILD
A Schlumberger Company

Standard TTL (54XX)

Device	38510/	Pin	Description	Packaging	
				DIP	Flat Pack
5400	00104	14	Quad 2-Input NAND Gate	BCA	BAA
5402	00401	14	Quad 2-Input NOR Gate	BCA	BAA
5404	00105	14	Hex Inverter	BCA	BAA
5408	01601	14	Quad 2-Input AND Gate	BCA	BAA
5409	01602	14	Quad 2-Input AND Gate (OC)* Output	BCA	BAA
5410	00103	14	Triple 3-Input NAND Gate	BCA	
5420	00102	14	Dual 4-Input NAND Gate	BCA	BAA
5430	00101	14	8-Input NAND Gate	BCA	BAA
5437	00302	14	Quad 2-Input NAND Buffer	BCA	BAA
5440	00301	14	Dual 4-Input NAND Buffer	BCA	BAA
5442A	01001	16	1-of-10 Decoder	BEA	BFA
5474	00205	14	Dual D-Type Positive Edge-Triggered Flip-Flop	BCA	BAA
5483A	00602	16	4-Bit Binary Full Adder	BEA	BFA
5486	00701	14	Quad 2-Input Exclusive-OR Gate	BCA	BAA
54121	01201	14	Monostable Multivibrator	BCA	BAA
54122	01202	14	Retriggerable Resettable Multivibrator	BCA	BAA
54123	01203	16	Dual Retriggerable Resettable Multivibrator	BEA	BFA
54151A	01406	16	8-Input Multiplexer	BEA	BFA
54153	01403	16	Dual 4-Input Multiplexer	BEA	BFA
54157	01405	16	Quad 2-Input Multiplexer	BEA	BFA
54174	01701	16	Hex D Flip-Flop	BEA	BFA
54175	01702	16	Quad D Flip-Flop	BEA	BFA

TTL (9300)

Device	38510/	Pin	Description	Packaging	
				DIP	Flat Pack
9309	01404	16	Dual 4-Input Multiplexer	BEA	BFA
9322	01405	16	Quad 2-Input Multiplexer	BEA	BFA

TTL (9600)

Device	38510/	Pin	Description	Packaging	
				DIP	Flat Pack
9601	01204	14	Retriggerable Monostable Multivibrator	BCA	BAA
9602	01205	16	Dual Retriggerable Resettable Monostable Multivibrator	BEA	BFA

DTL (930)

Device	38510/	Pin	Description	Packaging	
				DIP	Flat Pack
930	03001	14	Dual 4-Input NAND (Exp)	BCA	BAA
936	03003	14	Hex Inverter	BCA	BAA
946	03004	14	Quad 2-Input NAND	BCA	BAA
962	03005	14	Triple 3-Input NAND	BCA	BAA

*(OC) = Open Collector

FAST™ (54F)

Device	Pin	Description	Packaging Dual In-Line DMQB	 Flat Pack FMQB	 LCC (20 Terminal) L1MQB
54F00	14	Quad 2-Input NAND Gate	X	X	X
54F02	14	Quad 2-Input NOR Gate	X	X	X
54F04	14	Hex Inverter	X	X	X
54F08	14	Quad 2-Input AND Gate	X	X	X
54F10	14	Triple 3-Input NAND Gate	X	X	X
54F11	14	Triple 3-Input AND Gate	X	X	X
54F20	14	Dual 4-Input NAND Gate	X	X	X
54F32	14	Quad 2-Input OR Gate	X	X	X
54F64	14	4-2-3-2 Input AND/OR-Invert Gate	X	X	X
54F74	14	Dual D-Type Positive Edge-Triggered Flip-Flop	X	X	X
54F86	14	Quad 2-Input Exclusive-OR Gate	X	X	X
54F109	16	Dual J$\overline{K}$ Positive Edge-Triggered Flip-Flop	X	X	X
54F138	16	1-of-8 Decoder/Demultiplexer	X	X	X
54F139	16	Dual 1-of-4 Decoder	X	X	X
54F151A	16	8-Input Multiplexer	X	X	X
54F153	16	Dual 4-Input Multiplexer	X	X	X
54F157A	16	Quad 2-Input Multiplexer	X	X	X
54F158A	16	Quad 2-Input Multiplexer	X	X	X
54F160A	16	BCD Decade Counter, Sync. Presettable	X	X	X
54F161A	16	4-Bit Binary Counter, Sync. Presettable	X	X	X
54F162A	16	BCD Decade Counter, Sync. Presettable	X	X	X
54F163A	16	4-Bit Binary Counter, Sync. Presettable	X	X	X
54F164	14	Serial-In, Parallel-Out Shift Register	X	X	X
54F174	16	Hex D Flip-Flop (w/Master Reset)	X	X	X
54F175	16	Quad D Flip-Flop (w/Master Reset)	X	X	X
54F181	24	4-Bit Arithmetic Logic Unit	X	X	X
54F189	16	64-Bit Random Access Memory (w/3-State Outputs)	X	X	X
54F190	16	Up/Down Decade Counter (w/Preset & Ripple Clock)	X	X	
54F191	16	Up/Down Binary Counter (w/Preset & Ripple Clock)	X	X	
54F192	16	Up/Down Decade Counter (w/Separate Up/Down Clocks)	X	X	X
54F193	16	Up/Down Binary Counter (w/Separate Up/Down Clocks)	X	X	X
54F194	16	4-Bit Bidirectional Universal Shift Register	X	X	X
54F219	16	64-Bit Random Access Memory (w/3-State Outputs)	X	X	
54F240	20	Octal Buffer/Line Driver (w/3-State Outputs)	X	X	X
54F241	20	Octal Buffer/Line Driver (w/3-State Outputs)	X	X	X
54F243	14	Quad Bus Transceiver (w/3-State Outputs)	X	X	
54F244	20	Octal Buffer/Line Driver (w/3-State Outputs)	X	X	X
54F245	20	Octal Bidirectional Transceiver (w/3-State Inputs/Outputs)	X	X	X
54F251A	16	8-Input Multiplexer (w/3-State Inputs)	X	X	X
54F253	16	Dual 4-Input Multiplexer (w/3-State Inputs)	X	X	X

MIL-STD-883 (QB)

FAIRCHILD
A Schlumberger Company

FAST™ (54F)

Device	Pin	Description	Packaging Dual In-Line DMQB	Packaging Flat Pack FMQB	Packaging LCC (20 Terminal) L1MQB
54F257	16	Quad 2-Input Multiplexer (w/3-State Inputs)	X	X	X
54F258	16	Quad 2-Input Multiplexer (w/3-State Outputs)	X	X	X
54F280	14	9-Bit Parity Generator/Checker	X	X	X
54F283	16	4-Bit Binary Full Adder (w/Fast Carry)	X	X	X
54F322	20	8-Bit Serial/Parallel Register (w/Sign Extend)	X	X	
54F352	16	Dual 4-Input Multiplexer	X	X	X
54F353	16	Dual 4-Input Multiplexer (w/3-State Outputs)	X	X	
54F373	20	Octal Transparent Latch (w/3-State Outputs)	X	X	X
54F374	20	Octal D Flip-Flop (w/3-State Outputs)	X	X	X
54F378	16	Parallel D Register (w/Enable)	X	X	
54F385	20	Quad Serial Adder/Subtractor	X	X	
54F398	20	Quad 2-Port Register	X	X	X
54F399	16	Quad 2-Port Register	X	X	X
54F412	24	Multimode Buffered Latch (w/3-State Outputs)	X	X	
54F521	20	8-Bit Identity Comparator	X	X	X
54F533	20	Octal Transparent Latch (w/3-State Outputs)	X	X	X
54F534	20	Octal D-Type Flip-Flop (w/3-State Outputs)	X	X	X
54F545	20	Octal Bidirectional Transceiver (w/3-State Outputs/Inputs)	X	X	
54F547	20	Octal Decoder/Demultiplexer (w/Address Latches & Acknowledge)	X	X	
54F548	20	Octal Decoder/Multiplexer (w/Acknowledge)	X	X	
54F583	16	4-Bit BCD Adder	X	X	
54F676	24	16-Bit Serial-Parallel-In/Serial-Out Shift Register	X	X	

Low Power Schottky (54LS)

Device	Pin	Description	Packaging		
			Dual In-Line DMQB	Flat Pack FMQB	LCC (20 Terminal) L1MQB
54LS00	14	Quad 2-Input NAND Gate	X	X	X
54LS02	14	Quad 2-Input NOR Gate	X	X	X
54LS03	14	Quad 2-Input NAND Gate (OC)* Output	X	X	
54LS04	14	Hex Inverter	X	X	X
54LS05	14	Hex Inverter (OC)* Output	X	X	
54LS08	14	Quad 2-Input AND Gate	X	X	X
54LS09	14	Quad 2-Input AND Gate (OC)* Output	X	X	
54LS10	14	Triple 3-Input NAND Gate	X	X	X
54LS11	14	Triple 3-Input AND Gate	X	X	X
54LS13	14	Dual 4-Input Schmitt Trigger	X	X	X
54LS14	14	Hex Inverter Schmitt Trigger	X	X	X
54LS15	14	Triple 3-Input AND Gate (OC)* Output	X	X	
54LS20	14	Dual 4-Input NAND Gate	X	X	X
54LS21	14	Dual 4-Input Positive AND Gate	X	X	X
54LS22	14	Dual 4-Input NAND Gate (OC)* Output	X	X	
54LS26	14	Quad 2-Input NAND Buffer (OC)* Output	X	X	
54LS27	14	Triple 3-Input NOR Gate	X	X	X
54LS28	14	Quad 2-Input NOR Buffer	X	X	X
54LS30	14	8-Input NAND Gate	X	X	X
54LS32	14	Quad 2-Input OR Gate	X	X	X
54LS33	14	Quad 2-Input NOR Buffer (OC)* Output	X	X	
54LS37	14	Quad 2-Input NAND Buffer	X	X	X
54LS38	14	Quad 2-Input NAND Buffer (OC)* Output	X	X	X
54LS40	14	Dual 4-Input NAND Buffer	X	X	X
54LS42	16	1-of-10 Decoder	X	X	
54LS47	16	BCD to 7-Segment Decoder/Driver	X	X	
54LS48	16	BCD to 7-Segment Decoder	X	X	
54LS49	14	BCD to 7-Segment Decoder/Driver	X	X	
54LS51	14	2-Input/3-Input Dual AND/OR Gate	X	X	X
54LS54	14	4-Wide, 2-Input AND/OR-Invert Gate	X	X	
54LS55	14	2-Wide, 4-Input AND/OR Gate	X	X	
54LS74	14	Dual D-Type Positive Edge-Triggered Flip-Flop	X	X	X
54LS83A	16	4-Bit Binary Full Adder (w/Carry)	X	X	
54LS85	16	4-Bit Magnitude Comparator	X	X	X
54LS95B	14	4-Bit Right/Left Shift Register	X	X	
54LS109	16	Dual J$\overline{K}$ Positive Edge-Triggered Flip-Flop	X	X	
54LS112	16	Dual JK Negative Edge-Triggered Flip-Flop	X	X	X
54LS113	14	Dual JK Edge-Triggered Flip-Flop	X	X	X
54LS114	14	Dual JK Negative Edge-Triggered Flip-Flop	X	X	X
54LS125A	14	Quad Bus Buffer Gate	X	X	X
54LS126	14	Quad Bus Buffer Gate (w/3-State Outputs)	X	X	
54LS133	16	13-Input NAND Gate	X	X	X
54LS136	14	Quad 2-Input Exclusive-OR Gate (OC)* Output	X	X	
54LS138	16	1-of-8 Decoder/Demultiplexer	X	X	X

*(OC) = Open Collector

MIL-STD-883 (QB)

Low Power Schottky (54LS)

Device	Pin	Description	Packaging		
			Dual In-Line DMQB	Flat Pack FMQB	LCC (20 Terminal) L1MQB
54LS139	16	Dual 1-of-4 Decoder	X	X	X
54LS151	16	8-Input Multiplexer	X	X	X
54LS152	14	8-Input Multiplexer		X	
54LS153	16	Dual 4-Input Multiplexer	X	X	X
54LS155	16	Dual 1-of-4 Decoder/Demultiplexer	X	X	X
54LS156	16	Dual 1-of-4 Decoder/Multiplexer (OC)* Output	X	X	
54LS157	16	Quad 2-Input Multiplexer	X	X	X
54LS158	16	Quad 2-Input Multiplexer	X	X	X
54LS160A	16	BCD Decade Counter, Sync. Presettable	X	X	X
54LS161A	16	Binary Counter, Sync. Presettable	X	X	X
54LS162A	16	BCD Decade Counter, Sync. Presettable	X	X	X
54LS163A	16	4-Bit Binary Counter, Sync. Presettable	X	X	X
54LS164	14	Serial-In, Parallel-Out Shift Register	X	X	X
54LS165	16	8-Bit Parallel-To-Serial Converter	X	X	
54LS168	16	Synchronous Bidirectional BCD Decade Counter	X	X	X
54LS169	16	Synchronous Bidirectional Modulo-16 Binary Counter	X	X	X
54LS170	16	4 X 4 Register File (OC)* Output	X	X	
54LS173	16	4-Bit D-Type Register (w/3-State Outputs)	X	X	X
54LS174	16	Hex D Flip-Flop	X	X	X
54LS175	16	Quad D Flip-Flop	X	X	X
54LS181	24	4-Bit Arithmetic Logic Unit	X	X	
54LS192	16	Up/Down Decade Counter (w/Separate Up/Down Clocks)	X	X	X
54LS193	16	Up/Down Binary Counter (w/Separate Up/Down Clocks)	X	X	X
54LS194A	16	4-Bit Bidirectional Universal Shift Register	X	X	X
54LS195A	16	Universal 4-Bit Shift Register	X	X	X
54LS240	20	Octal Buffer/Line Driver (w/3-State Outputs)	X	X	X
54LS241	20	Octal Buffer/Line Driver (w/3-State Outputs)	X	X	X
54LS244	20	Octal Buffer/Line Driver	X	X	X
54LS245	20	Octal Bus Transceiver (w/3-State Outputs)	X	X	X
54LS247	16	BCD to 7-Segment Decoder/Driver	X	X	
54LS248	16	BCD to 7-Segment Decoder	X	X	
54LS249	16	BCD to 7-Segment Decoder (OC)* Output	X	X	
54LS251	16	8-Input Multiplexer (w/3-State Outputs)	X	X	
54LS253	16	Dual 4-Input Multiplexer (w/3-State Outputs)	X	X	X
54LS256	16	Dual 4-Bit Addressable Latch	X	X	

*(OC) = Open Collector

FAIRCHILD
A Schlumberger Company

MIL-STD-883 (QB)

Low Power Schottky (54LS)

Device	Pin	Description	Packaging		
			Dual In-Line DMQB	Flat Pack FMQB	LCC (20 Terminal) L1MQB
54LS257A	16	Quad 2-Input Multiplexer (w/3-State Outputs)	X	X	X
54LS258A	16	Quad 2-Input Multiplexer (w/3-State Outputs)	X	X	X
54LS259	16	8-Bit Addressable Latch	X	X	X
54LS260	14	Dual 5-Input NOR Gate	X	X	X
54LS266	14	Quad 2-Input Exclusive-NOR Gate (OC)* Output	X	X	
54LS273	20	8-Bit Register (w/Clear)	X	X	X
54LS279	16	Quad Set/Reset Latch	X	X	X
54LS283	16	4-Bit Binary Full Adder (w/Fast Carry)	X	X	X
54LS295A	14	4-Bit Shift Register (w/3-State Outputs)	X	X	
54LS298	16	Quad 2-Port Register	X	X	
54LS299	20	8-Input Shift/Storage Register	X	X	X
54LS322	20	8-Bit Serial/Parallel Register (w/Sign Extend)	X	X	
54LS323	20	8-Bit Universal Shift/Storage Register	X	X	
54LS347	16	BCD to 7-Segment Decoder/Driver	X	X	
54LS352	16	Dual 4-Input Multiplexer	X	X	
54LS353	16	Dual 4-Input Multiplexer (w/3-State Outputs)	X	X	
54LS365A	16	Hex 3-State Buffer (w/Common Enable)	X	X	X
54LS366A	16	Hex 3-State Inverter (w/Common Enable)	X	X	X
54LS367A	16	Hex 3-State Buffer, 4-Bit and 2-Bit	X	X	X
54LS368A	16	Hex 3-State Inverter, 4-Bit and 2-Bit	X	X	X
54LS374	20	Octal D-Type Flip-Flop	X	X	X
54LS375	16	4-Bit Quad Latch	X	X	
54LS377	20	Octal D Flip-Flop, (w/Common Enable and Clock)	X	X	X
54LS378	16	Parallel D Register (w/Enable)	X	X	
54LS379	16	Quad Parallel Register (w/Enable)	X	X	X
54LS395	16	4-Bit Shift Register (w/3-State Outputs)	X	X	X
54LS447	16	BCD to 7-Segment Decoder/Driver	X	X	
54LS490	16	Dual Decade Counter	X	X	
54LS502	16	8-Bit Successive Approximation Register (w/Expansion Control)	X	X	
54LS503	16	8-Bit Successive Approximation Register	X	X	
54LS670	16	4 x 4 Register File	X	X	X

*(OC) = Open Collector

Low Power Schottky (96LS)

Device	Pin	Description	Packaging Dual In-Line DMQB	Packaging Flat Pack FMQB
96LS02	16	Dual Retriggerable Resettable Monostable Multivibrator	X	X

ECL (10K)

Device	Pin	Description	Packaging Dual In-Line DMQB	Packaging Flat Pack FMQB
10010	16	BCD Decade Counter/4-Bit Binary Counter	X	X
10014	16	Active Terminator	X	X
10016	16	4-Bit Binary Counter/BCD Decade Counter	X	X
10501	16	Quad OR/NOR	X	X
10502	16	Quad NOR	X	X
10504	16	Quad AND	X	X
10514	16	Line Receiver	X	X
10515	16	Quad Line Receiver	X	X
10516	16	Triple Line Receiver	X	X
10523	16	Triple Bus Driver	X	X
10524	16	Quad TTL to ECL Translator	X	X
10525	16	Quad ECL to TTL Translator	X	X
10533	16	Quad D-Latch	X	X
10534	16	Dual Multiplexer/Latch	X	X
10535	16	Dual JK Flip-Flop F10K Voltage-Compensated ECL	X	X
10558	16	Quad Multiplexer	X	X
10561	16	1-of-8 Decoder	X	X
10562	16	1-of-8 Decoder	X	X
10631	16	High Speed Dual D Flip-Flop	X	X

Standard TTL (54XX)

Device	Pin	Description	Packaging Dual In-Line DMQB	Packaging Flat Pack FMQB
5400	14	Quad 2-Input NAND Gate	X	X
5402	14	Quad 2-Input NOR Gate	X	X
5404	14	Hex Inverter	X	X
5408	14	Quad 2-Input AND Gate	X	X
5409	14	Quad 2-Input AND Gate (OC)* Output	X	X
5410	14	Triple 3-Input NAND Gate	X	X
5414	14	Hex Schmitt Trigger Inverter	X	X
5420	14	Dual 4-Input NAND Gate	X	X
5425	14	Dual 4-Input NOR Gate (w/Strobe)	X	X
5430	14	8-Input NAND Gate	X	X
5432	14	Quad 2-Input OR Gate	X	X
5437	14	Quad 2-Input NAND Buffer	X	X
5440	14	4-Input NAND Buffer	X	X
5442A	16	1-of-10 Decoder	X	X
5451	14	Dual 2-Wide, 2-Input AOI Gate	X	X
5473	14	Dual JK Flip-Flop	X	X
5474	14	Dual D Positive Edge-Triggered Flip-Flop	X	X
5475	16	4-Bit Bistable Latch	X	X
5476	16	Dual JK Flip-Flop	X	X
5483A	16	4-Bit Binary Adder (w/ Carry)	X	X
5485	16	4-Bit Magnitude Comparator	X	X
5486	14	Quad 2-Input Exclusive-OR Gate	X	X
5490A	14	Decade Counter	X	X
5495A	14	4-Bit Right/Left Shift Register	X	X
5497	16	Synchronous Modulo 64-Bit Rate Multiplier	X	X
54121	14	Monostable Vibrator	X	X
54122	14	Retriggerable Resettable Multivibrator	X	X
54123	16	Dual Retriggerable Resettable Multivibrator	X	X
54125	14	Quad Bus Buffer Gate	X	X
54150	24	16-Input Multiplexer	X	X
54151A	16	8-Input Multiplexer	X	X
54153	16	Dual 4-Input Multiplexer	X	X
54154	24	1-of-16 Decoder/Demultiplexer	X	X
54157	16	Quad 2-Input Multiplexer	X	X
54161	16	Synchronous Presettable Binary Counter	X	X
54164	14	Serial-In, Parallel-Out Shift Register	X	X

*(OC) = Open Collector

MIL-STD-883 (QB)

FAIRCHILD
A Schlumberger Company

Standard TTL (54XX)

			Packaging	
Device	Pin	Description	Dual In-Line DMQB	Flat Pack FMQB
54165	16	8-Bit Serial-to-Parallel Converter	X	X
54170	16	4 x 4 Register File (OC)* Output	X	X
54173	16	4-Bit D-Type Register (w/3-State Outputs)	X	X
54174	16	Hex D Flip-Flop	X	X
54175	16	Quad D Flip-Flop	X	X
54191	16	Up/Down Binary Counter (w/Preset and Ripple Clock)	X	X
54279	16	Quad Latch, Set/Reset	X	X
54298	16	Quad 2-Port Register	X	X

TTL (9300)

			Packaging	
Device	Pin	Description	Dual In-Line DMQB	Flat Pack FMQB
9300	16	4-Bit Universal Shift Register	X	X
9301	16	1-of-10 Decoder	X	X
9308	24	Dual D 4-Bit Latch	X	X
9309	16	Dual 4-Input Multiplexer	X	X
9311	24	1-of-16 Decoder/Demultiplexer	X	X
9312	16	8-Input Multiplexer	X	X
9314	16	Quad Latch	X	X
9316	16	4-Bit Binary Counter	X	X
9321	16	Dual 1-of-4 Decoder	X	X
9322	16	Quad 2-Input Multiplexer	X	X
9324	16	5-Bit Comparator	X	X
9328	16	Dual 8-Bit Shift Register	X	X
9334	16	8-Bit Addressable Latch	X	X
9338	16	8-Bit Multiple Port Register	X	X
9348	16	12-Input Parity Checker/Generator	X	X

TTL (9600)

			Packaging	
Device	Pin	Description	Dual In-Line DMQB	Flat Pack FMQB
9601	14	Retriggerable Monostable Multivibrator	X	X
9602	16	Dual Retriggerable Resettable Monostable Multivibrator	X	X

*(OC) = Open Collector

Low Power TTL (93L, 96L)

Device	Pin	Description	Packaging Dual In-Line DMQB	Packaging Flat Pack FMQB
93L00	16	4-Bit Universal Shift Register	X	X
93L01	16	1-of-10 Decoder	X	X
93L08	24	Dual D 4-Bit Latch	X	X
93L09	16	Dual 4-Input Multiplexer	X	X
93L10	16	BCD Decade Counter/4-Bit Binary Counter	X	X
93L12	16	8-Input Multiplexer	X	X
93L14	16	Quad Latch	X	X
93L21	16	Dual 1-of-4 Decoder	X	X
93L22	16	Quad 2-Input Multiplexer	X	X
93L24	16	5-Bit Comparator	X	X
93L28	16	Dual 8-Bit Shift Register	X	X
93L34	16	8-Bit Addressable Latch	X	X
93L38	16	8-Bit Multiple Port Register	X	X
96L02	16	Dual Retriggerable Resettable Monostable Vibrator	X	X

DTL (930, 90XX, 91XX)

Device	Pin	Description	Packaging Dual In-Line DMQB	Packaging Flat Pack FMQB
930	14	Dual 4-Input NAND Extendable	X	X
932	14	Dual 4-Input NAND Extendable	X	X
936	14	Hex Inverter	X	X
937	14	Hex Inverter	X	X
944	14	Dual 4-Input NAND Extendable	X	X
945	14	Flip-Flop, Set/Reset	X	X
946	14	Quad 2-Input NAND	X	X
948	14	Flip-Flop, Set/Reset	X	X
949	14	Quad 2-Input NAND	X	X
962	14	Triple 3-Input NAND	X	X
9093	14	Dual JK Flip-Flop	X	X
9099	14	Dual JK Flip-Flop	X	X
9109	14	Hex Inverter Element	X	
9112	14	Hex Inverter (OC)* Output	X	

*(OC)=Open Collector

Fairchild JAN Cross Reference Guide

Introduction

This Fairchild JAN Cross Reference Guide is provided as a tool to assist in the determination of MIL-M-38510 product availability. The guide is organized by logic family with generic part numbers listed alphanumerically for quick reference. The second column marked "JM38510/" is a listing of military part numbers for Fairchild JAN qualified devices. All QPL sources are indicated in subsequent columns. Alternate source product may vary in respect to lead finish or 14 pin flatpack case outline.

Ordering Codes

MIL-M-38510 (JAN)
Example

JM38510/ 346 02 B R A

JM38510/: MIL-M-38510 Basic Specification
346: Slash Sheet
02: Device Number
B: Screening Class B
R: Case Outline
A: Lead Finish

Lead Finish
A = Solder Dipped
B = Tin Plate

Case Outline
A = ¼" x ¼" Flat Pack, 14-pin, Ceramic
C = ¼" x ¾" Dual In-Line, 14-pin, Ceramic
D = ¼" x ⅜" Flat Pack, 14-pin, Ceramic*
E = ¼" x ¾" Dual In-Line, 16-pin, Ceramic
F = ¼" x ⅜" Flat Pack, 16-pin, Ceramic
J = ½" x 1¼" Dual In-Line, 24-pin, Ceramic*
R = ¼" x 1 1/16" Dual In-Line, 20-pin, Ceramic
S = ¼" x ½" Flat Pack, 20-pin, Ceramic*

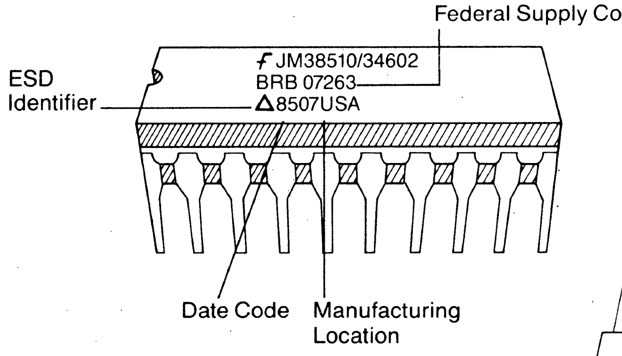
Federal Supply Code Number
ESD Identifier
ƒ JM38510/34602
BRB 07263
Δ8507USA
Date Code
Manufacturing Location

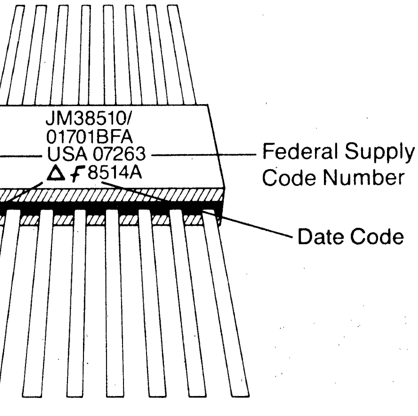
JM38510/
01701BFA
USA 07263
Δ ƒ 8514A
Manufacturing Location
Federal Supply Code Number
ESD Identifier
Date Code

*Availability to be announced.

Fairchild JAN Cross Reference Guide

FAST® Fairchild Advanced Schottky TTL

Generic Part Number	JM38510/	FSC	MOT	NAT	SIG	TI
54F00	33001 BDA	●				
54F00	BCA	●				
54F02	33301 BDA	●				
54F02	BCA	●				
54F04	33002BDA	●	●			
54F04	BCA	●	●			
54F08	34001 BDA	●	●			
54F08	BCA	●	●			
54F10	33003BDA	●				
54F10	BCA	●				
54F11	34002BDA	●				
54F11	BCA	●				
54F20	33004BDA	●				
54F20	BCA	●				
54F32	33501 BDA	●				
54F32	BCA	●				
54F64	33401 BDA	●				
54F64	BCA	●				
54F74	34101 BDA	●				
54F74	BCA	●				
54F109	34102 BEA	●				
54F109	BFA	●				
54F138	33701 BEA	●				
54F138	BFA	●				
54F139	33702 BEA	●				
54F139	BFA	●				
54F153	33902BEA	●				
54F153	BFA	●				
54F175	34104 BEA	●				
54F175	BFA	●				
54F240	33201 BRA	●				
54F241	33202BRA	●				
54F244	33203BRA	●				
54F253	33908BEA	●				
54F253	BFA	●				
54F280	34901 BDA	●				
54F280	BCA	●				
54F283	34201 BEA	●				
54F283	BFA	●				
54F352	33909BEA	●				
54F352	BFA	●				
54F353	33910 BEA	●				
54F353	BFA	●				
54F373	34601 BRA	●				
54F374	34105 BRA	●				
54F398	35001 BRA	●				
54F399	35002BEA	●				
54F399	BFA	●				
54F521	34701 BRA	●				
54F533	34602BRA	●				

Schottky To FAST® Conversion Chart

NOTE: Schottky and FAST parts with the same numeric portion of the generic type are functionally similar. FAST replaceability for Schottky may be appropriate with proper user and government qualification.

Schottky JM38510/	Schottky Generic Part Number	FAST Generic Part Number	FAST JM38510/
07001	54S00	54F00	33001
07003	54S04	54F04	33002
07005	54S10	54F10	33003
07006	54S20	54F20	33004
07101	54S74	54F74	34101
07106	54S175	54F175	34104
07301	54S02	54F02	33301
07402	54S64	54F64	33401
07701	54S138	54F138	33701
07702	54S139	54F139	33702
07902	54S153	54F153	33902
08001	54S11	54F11	34002
08003	54S08	54F08	34001

Fairchild JAN Cross Reference Guide

Low Power Schottky

Generic Part Number	JM38510/	FSC	MOT	NAT	SIG	TI
54LS00	30001 BDA	●	●	●	●	
54LS00	BCA	●	●	●	●	●
54LS02	30301 BDA	●	●	●	●	
54LS02	BCA	●	●	●	●	●
54LS03	30002BDA	●	●	●		
54LS03	BCA	●	●	●		●
54LS04	30003BDA	●	●	●	●	
54LS04	BCA	●	●	●	●	●
54LS05	30004BDA	●	●	●		
54LS05	BCA	●	●	●		●
54LS08	31004 BDA	●	●	●	●	
54LS08	BCA	●	●	●	●	●
54LS10	30005BDA	●	●	●	●	
54LS10	BCA	●	●	●	●	●
54LS11	31001 BDA	●	●	●		
54LS11	BCA	●	●	●		●
54LS20	30007 BDA	●	●	●	●	
54LS20	BCA	●	●	●	●	●
54LS21	31003 BDA	●	●	●		
54LS21	BCA	●	●	●		●
54LS22	30008BDA	●	●	●		
54LS22	BCA	●	●	●		●
54LS27	30302BDA	●	●	●		
54LS27	BCA	●	●	●		●
54LS30	30009BDA	●	●	●		
54LS30	BCA	●	●	●		●
54LS32	30501 BDA	●	●	●		
54LS32	BCA	●	●	●	●	●
54LS42	30703 BEA	●	●	●		●
54LS42	BFA	●	●	●		
54LS51	30401 BDA	●	●	●		
54LS51	BCA	●	●	●		●
54LS54	30402BDA	●	●	●		
54LS54	BCA	●	●	●		●
54LS74	30102 BDA	●	●	●	●	
54LS74	BCA	●	●	●	●	●
54LS83A	31201 BEA	●	●			●
54LS83A	BFA	●	●			
54LS85	31101BEA	●	●	●	●	●
54LS85	BFA	●	●	●	●	
54LS95	30603BDA	●	●			
54LS95	BCA	●	●			●
54LS109	30109 BEA	●	●	●	●	●
54LS109	BFA	●	●	●	●	
54LS112	30103 BEA	●	●			●
54LS112	BFA	●	●			
54LS113	30104 BDA	●	●			
54LS113	BCA	●	●			●
54LS114	30105 BDA	●	●			
54LS114	BCA	●	●			●
54LS138	30701 BEA	●	●	●	●	●
54LS138	BFA	●	●	●	●	
54LS139	30702 BEA	●	●	●		●
54LS139	BFA	●	●	●		
54LS151	30901 BEA	●	●	●		●
54LS151	BFA	●	●	●		
54LS153	30902BEA	●	●	●		●
54LS153	BFA	●	●	●		
54LS157	30903BEA	●	●	●		●
54LS157	BFA	●	●	●		
54LS158	30904BEA	●	●	●		●
54LS158	BFA	●	●	●		
54LS174	30106 BEA	●	●	●	●	●
54LS174	BFA	●	●	●	●	
54LS175	30107 BEA	●	●		●	●
54LS175	BFA	●	●		●	
54LS193	31508 BEA	●	●	●	●	●
54LS193	BFA	●	●	●	●	
54LS194	30601 BEA	●	●		●	●
54LS194	BFA	●	●		●	
54LS240	32401 BRA	●	●	●	●	●
54LS253	30908BEA	●	●	●		●
54LS253	BFA	●	●	●		
54LS257A	30906BEA	●	●	●	●	●
54LS257A	BFA	●	●	●	●	

Fairchild JAN Cross Reference Guide

	Generic Part Number	JM38510/	FSC	MOT	NAT	SIG	TI
Low Power Schottky	54LS258	30907BEA	●	●	●	●	●
	54LS258	BFA	●	●	●	●	
	54LS266	30303BDA	●	●	●		
	54LS266	BCA	●	●	●		●
	54LS279	31602BEA	●	●	●		●
	54LS279	BFA	●	●	●		
	54LS283	31202BEA	●	●	●		●
	54LS283	BFA	●	●	●		
	54LS365	32201BEA	●	●	●	●	●
	54LS365	BFA	●	●	●	●	
	54LS366	32202BEA	●	●	●		●
	54LS366	BFA	●	●	●		
	54LS367	32203BEA	●	●	●	●	●
	54LS367	BFA	●	●	●	●	
	54LS368	32204BEA	●	●	●	●	●
	54LS368	BFA	●	●	●		
TTL	5400	00104BDA	●		●	●	
	5400	BCA	●		●	●	●
	5402	00401BDA	●		●		
	5402	BCA	●		●		●
	5404	00105BDA	●		●	●	
	5404	BCA	●		●	●	●
	5408	01601BDA	●	●	●		
	5408	BCA	●		●		
	5409	01602BDA	●	●	●		
	5409	BCA	●		●		
	5410	00103BCA	●	●	●		●
	5420	00102BDA	●	●	●		
	5420	BCA	●	●	●		●
	5430	00101BDA	●	●	●		
	5430	BCA	●		●		●
	5437	00302BDA	●		●		
	5437	BCA	●	●	●		●
	5440	00301BDA	●		●		
	5440	BCA	●	●	●		●
	5442	01001BEA	●		●		
	5442	BFA	●	●	●		
	5474	00205BDA	●	●	●		
	5474	BCA	●		●		●
	5483	00602BEA	●		●		●
	5483	BFA	●				
	5486	00701BDA	●	●	●		
	5486	BCA	●	●	●		●
	9309	01404BEA	●		●	●	
	9309	BFA	●		●		
	9322	01405BEA	●	●	●		
	9322	BFA	●	●	●		
	9601	01204BDA	●	●			
	9601	BCA	●	●			
	9602	01205BEA	●				
	9602	BFA	●				
	54121	01201BDA	●	●			
	54121	BCA	●	●		●	
	54122	01202BDA	●	●			
	54122	BCA	●	●			
	54123	01203BEA	●		●	●	
	54123	BFA	●		●	●	
	54151	01406BEA	●		●		
	54151	BFA	●	●	●		
	54153	01403BEA	●		●		
	54153	BFA	●		●		
	54174	01701BEA	●			●	●
	54174	BFA	●	●		●	
	54175	01702BEA	●		●	●	●
	54175	BFA	●		●	●	
DTL	930	03001BDA	●				
	930	BCA	●				
	936	03003BDA	●				
	936	BCA	●				
	946	03004BDA	●				
	946	BCA	●				
	962	03005BDA	●				
	962	BCA	●				

Fairchild JAN Cross Reference Guide

MIL-M-38510 to Generic Part Number Cross Reference

FAST®

JM38510/	Generic Part Number
33001	54F00
33002	54F04
33003	54F10
33004	54F20
33201	54F240
33202	54F241
33203	54F244
33301	54F02
33401	54F64
33501	54F32
33701	54F138
33702	54F139
33902	54F153
33908	54F253
33909	54F352
33910	54F353
34001	54F08
34002	54F11
34101	54F74
34102	54F109
34104	54F175
34105	54F374
34201	54F283
34601	54F373
34602	54F533
34701	54F521
34901	54F280
35001	54F398
35002	54F399

LS

JM38510/	Generic Part Number
30001	54LS00
30002	54LS03
30003	54LS04
30004	54LS05
30005	54LS10
30007	54LS20
30008	54LS22
30009	54LS30
30102	54LS74
30103	54LS112
30104	54LS113
30105	54LS114
30106	54LS174
30107	54LS175
30109	54LS109
30301	54LS02
30302	54LS27
30303	54LS266
30401	54LS51
30402	54LS54
30501	54LS32
30601	54LS194
30603	54LS95
30701	54LS138
30702	54LS139
30703	54LS42
30901	54LS151
30902	54LS153
30903	54LS157
30904	54LS158
30906	54LS257A
30907	54LS258
30908	54LS253
31001	54LS11
31003	54LS21
31004	54LS08
31101	54LS85
31201	54LS83A
31202	54LS283
31508	54LS193
31602	54LS279
32201	54LS365
32202	54LS366
32203	54LS367
32204	54LS368
32401	54LS240

TTL

JM38510/	Generic Part Number
00101	5430
00102	5420
00103	5410
00104	5400
00105	5404
00205	5474
00301	5440
00302	5437
00401	5402
00602	5483
00701	5486
01001	5442
01201	54121
01202	54122
01203	54123
01204	9601
01205	9602
01403	54153
01404	9309
01405	9322
01406	54151
01601	5408
01602	5409
01701	54174
01702	54175

DTL

JM38510/	Generic Part Number
03001	930
03003	936
03004	946
03005	962

Fairchild assumes no responsibility for use or accuracy of the cross-reference data contained herein. Refer to actual QPL Listing, or DESC, Dayton, Ohio for complete data.

This cross-reference is based on part listings contained in QPL-38510-64, dated 19 July 1985.

Fairchild Semiconductor Corporation
Digital Aerospace & Defense Division
333 Western Avenue
South Portland, Maine 04106
1-800-554-4443
TWX: 710-221-1980

©1985 Fairchild Printed in U.S.A. 20M 305103 6654-108-A

October, 1985. Fairchild reserves the right to make changes in the circuitry or specifications at any time without notice.
Fairchild cannot assume responsibility for use of any circuitry described other than circuitry entirely embodied in a Fairchild product.

HARRIS

HS-80C85RH

Radiation Hardened 8 Bit CMOS Microprocessor

October 1985 ***Advance Information***

Features

- **100% Software Compatible with INTEL 8085**
- **Radiation Hardened**
  - **5MHZ Operation, Post Radiation at 10 Volts**
  - **Total Dose .... 1 × 10^5 RAD(Si)**
  - **Transient Upset .... >1 × 10^8 RAD(Si)/sec**
  - **Latch-up Immune EPI-CMOS .... >1 × 10^{12}RAD(Si)***
- **Completely Static Design**
  - **Operation From DC to 5MHZ**
- **Low Standby Current**
- **Single Power Supply (+5V or +10V Operation)**
- **On Chip Clock Generator and System Controller**
- **Four Vectored Interrupt Inputs**
- **Self Aligned Junction Isolated CMOS Process**
- **Electrically Equivalent to Sandia SA3000**
- **−55°C to +125°C Operation**

Pinout

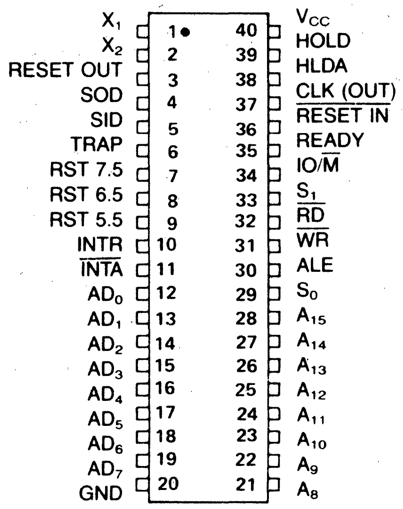
X_1 1
X_2 2
RESET OUT 3
SOD 4
SID 5
TRAP 6
RST 7.5 7
RST 6.5 8
RST 5.5 9
INTR 10
$\overline{\text{INTA}}$ 11
AD_0 12
AD_1 13
AD_2 14
AD_3 15
AD_4 16
AD_5 17
AD_6 18
AD_7 19
GND 20
40 V_{CC}
39 HOLD
38 HLDA
37 CLK (OUT)
36 $\overline{\text{RESET IN}}$
35 READY
34 IO/$\overline{\text{M}}$
33 S_1
32 $\overline{\text{RD}}$
31 $\overline{\text{WR}}$
30 ALE
29 S_0
28 A_{15}
27 A_{14}
26 A_{13}
25 A_{12}
24 A_{11}
23 A_{10}
22 A_9
21 A_8

Description

The Harris HS-80C85RH radiation hardened, 8-bit CMOS CPU is manufactured using a self-aligned, junction isolated, silicon gate CMOS process. It is a functional logic emulation of the HMOS 8085 and its instruction set is 100% software compatible with the HMOS device. The HS-80C85RH is designed for operation at +10V, but can be operated at +5V if reduced operating speed is acceptable. Its high level of integration allows the construction of a radiation hardened microcomputer system with as few as three ICs (HS-80C85RH CPU, HS-81C55RH/56RH RAM/IO, and HS-83C55RH ROM/IO). Contact your local sales office for sample availability.

Functional Diagram

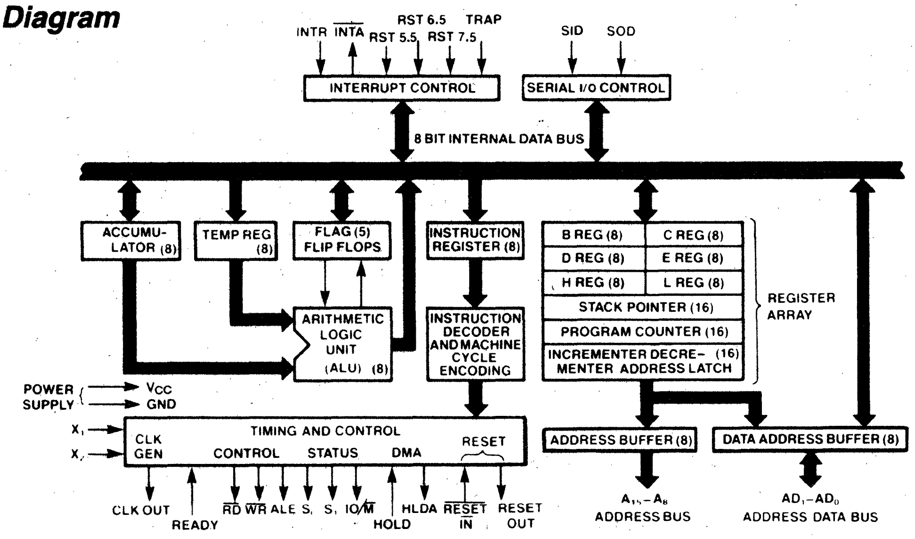
INTR
$\overline{\text{INTA}}$
RST 5.5
RST 6.5
RST 7.5
TRAP
SID
SOD
INTERRUPT CONTROL
SERIAL I/O CONTROL
8 BIT INTERNAL DATA BUS
ACCUMULATOR (8)
TEMP REG (8)
FLAG (5) FLIP FLOPS
INSTRUCTION REGISTER (8)
B REG (8)
C REG (8)
D REG (8)
E REG (8)
H REG (8)
L REG (8)
STACK POINTER (16)
PROGRAM COUNTER (16)
INCREMENTER DECREMENTER ADDRESS LATCH (16)
REGISTER ARRAY
ARITHMETIC LOGIC UNIT (ALU) (8)
INSTRUCTION DECODER AND MACHINE CYCLE ENCODING
POWER SUPPLY
V_{CC}
GND
X_1
X_2
TIMING AND CONTROL
CLK GEN
CONTROL
STATUS
DMA
RESET
ADDRESS BUFFER (8)
DATA ADDRESS BUFFER (8)
CLK OUT
READY
$\overline{\text{RD}}$
$\overline{\text{WR}}$
ALE
S_0
S_1
IO/$\overline{\text{M}}$
HOLD
HLDA
$\overline{\text{RESET IN}}$
RESET OUT
$A_{15}-A_8$ ADDRESS BUS
AD_7-AD_0 ADDRESS DATA BUS

---

* For operation at 10 volts and transient levels above 1 × 10^{10} rad(Si)/sec, please refer to application Note 401.

CAUTION: These devices are sensitive to electronic discharge. Proper I.C. handling procedures should be followed.

Copyright © Harris Corporation 1985

BASIC SYSTEM TIMING

The HS-80C85RH has a multiplexed Data Bus. ALE is used as a strobe to sample the lower 8-bits of address on the Data Bus. Figure 9 shows an instruction fetch, memory read and I/O write cycle (as would occur during processing of the OUT instruction). Note that during the I/O write and read cycle that the I/O port address is copied on both the upper and lower half of the address.

There are seven possible types of machine cycles. Which of these seven takes place is defined by the status of the three status lines (IO/$\overline{M}$, S_1, S_0) and the three control signals ($\overline{RD}$, $\overline{WR}$, and $\overline{INTA}$). (See Table 3.) The status lines can be used as advanced controls (for device selection, for example), since they become active at the T_1 state, at the outset of each machine cycle. Control lines $\overline{RD}$ and $\overline{WR}$ are used as command lines since they become active when the transfer of data is to take place.

A machine cycle normally consists of three T states, with the exception of OPCODE FETCH, which normally has either four or six T states (unless WAIT or HOLD states are forced by the receipt of $\overline{READY}$ or HOLD inputs). Any T state must be one of ten possible states, shown in Table 4.

Table 3. HS-80C85RH Machine Cycle Chart

MACHINE CYCLE			STATUS			CONTROL		
			IO/$\overline{M}$	S1	S0	$\overline{RD}$	$\overline{WR}$	$\overline{INTA}$
OPCODE FETCH	(OF)		0	1	1	0	1	1
MEMORY READ	(MR)		0	1	0	0	1	1
MEMORY WRITE	(MW)		0	0	0	1	0	1
I/O READ	(IOR)		1	1	0	0	1	1
I/O WRITE	(IOW)		1	0	1	1	0	1
ACKNOWLEDGE OF INTR	(INA)		1	1	1	1	1	0
BUS IDLE	(BI):	DAD	0	1	0	1	1	1
		ACK. OF RST, TRAP	1	1	1	1	1	1
		HALT	TS	0	0	TS	TS	1

Table 4. HS-80C85RH Machine State Chart

Machine State	Status & Buses				Control		
	S1,S0	IO/$\overline{M}$	A_8-A_{15}	AD_0-AD_7	$\overline{RD}$,$\overline{WR}$	$\overline{INTA}$	ALE
T_1	X	X	X	X	1	1	1*
T_2	X	X	X	X	X	X	0
T_{WAIT}	X	X	X	X	X	X	0
T_3	X	X	X	X	X	X	0
T_4	1	0†	X	TS	1	1	0
T_5	1	0†	X	TS	1	1	0
T_6	1	0†	X	TS	1	1	0
T_{RESET}	X	TS	TS	TS	TS	1	0
T_{HALT}	0	TS	TS	TS	TS	1	0
T_{HOLD}	X	TS	TS	TS	TS	1	0

0 = Logic "0"
1 = Logic "1"
TS = High Impedance
X = Unspecified

* ALE not generated during 2nd and 3rd machine cycles of DAD instruction.

† IO/M = 1 during T_4-T_6 of INA machine cycle.

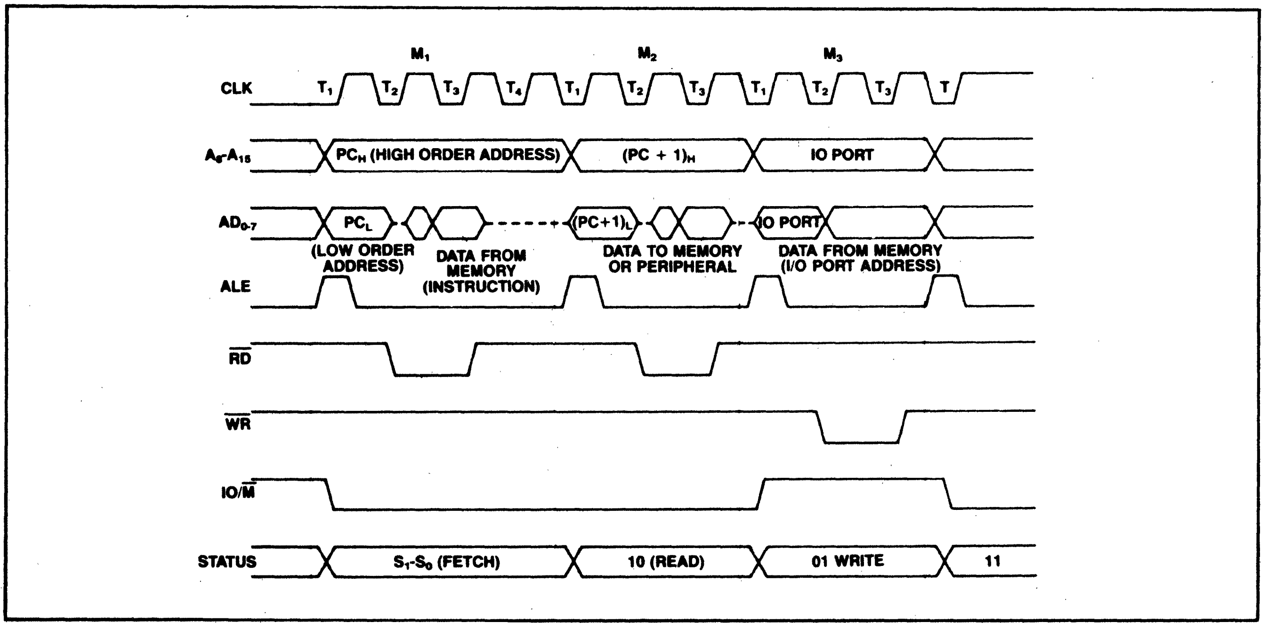
M₁
M₂
M₃
CLK
T₁
T₂
T₃
T₄
T₁
T₂
T₃
T₁
T₂
T₃
T
A₈-A₁₅
PCₕ (HIGH ORDER ADDRESS)
(PC + 1)ₕ
IO PORT
AD₀-₇
PCₗ
(PC+1)ₗ
IO PORT
(LOW ORDER ADDRESS)
DATA FROM MEMORY (INSTRUCTION)
DATA TO MEMORY OR PERIPHERAL
DATA FROM MEMORY (I/O PORT ADDRESS)
ALE
RD
WR
IO/M
STATUS
S₁-S₀ (FETCH)
10 (READ)
01 WRITE
11

Figure 9. 80C85RH Basic System Timing

HARRIS HS-81C55/56RH

October 1985 *Advance Information*

Radiation Hardened
256 × 8 CMOS RAM

Features

- **Radiation Hardened CMOS Process**
- **Total Dose .... 1×10^5 RAD(Si)**
- **Transient Upset .... >1×10^8 RAD(Si)/sec**
- **Latch-up Immune EPI-CMOS ..... >1×10^{12}RAD(Si)***
- **Completely Static Design**
- **Pin-Compatible with INTEL 8155/56H**
- **Single Power Supply (+5V or +10V Operation)**
- **Bus-Compatible with HS-80C85RH CPU**
- **300ns Max Access Time, Post Radiation**
- **−55°C to +125°C operation**
- **Internal Address Latch**
- **2 Programmable 8 Bit I/O Ports**
- **1 Programmable 6 Bit I/O Port**
- **Programmable 14 Bit Binary Counter/Timer**
- **Multiplexed Address and Data Base**
- **Electrically Equivalent to Sandia SA3001**

Pinout

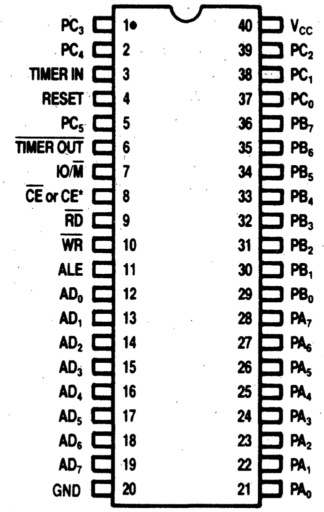
PC₃ 1
PC₄ 2
TIMER IN 3
RESET 4
PC₅ 5
TIMER OUT 6
IO/M̄ 7
C̄Ē or CE* 8
R̄D̄ 9
W̄R̄ 10
ALE 11
AD₀ 12
AD₁ 13
AD₂ 14
AD₃ 15
AD₄ 16
AD₅ 17
AD₆ 18
AD₇ 19
GND 20
40 V_CC
39 PC₂
38 PC₁
37 PC₀
36 PB₇
35 PB₆
34 PB₅
33 PB₄
32 PB₃
31 PB₂
30 PB₁
29 PB₀
28 PA₇
27 PA₆
26 PA₅
25 PA₄
24 PA₃
23 PA₂
22 PA₁
21 PA₀

Description

The Harris HS-81C55RH/81C56RH are radiation hardened RAM and I/O chips fabricated using a self-aligned silicon gate CMOS process. The chips are intended for use in the 80C85RH radiation hardened microprocessor system. The RAM portion is designed as 2048 static cells organized as 256 × 8. A maximum, post-radiation access time of 300ns permits use with no wait states in the 80C85RH CPU. The HS-81C55RH contains an active low chip enable while the HS-81C56RH has an active high chip enable. Although designed for operation at 10V, the chips can be operated at 5V if reduced operating speed can be accepted. Contact your local sales office for sample availability.

Block Diagram

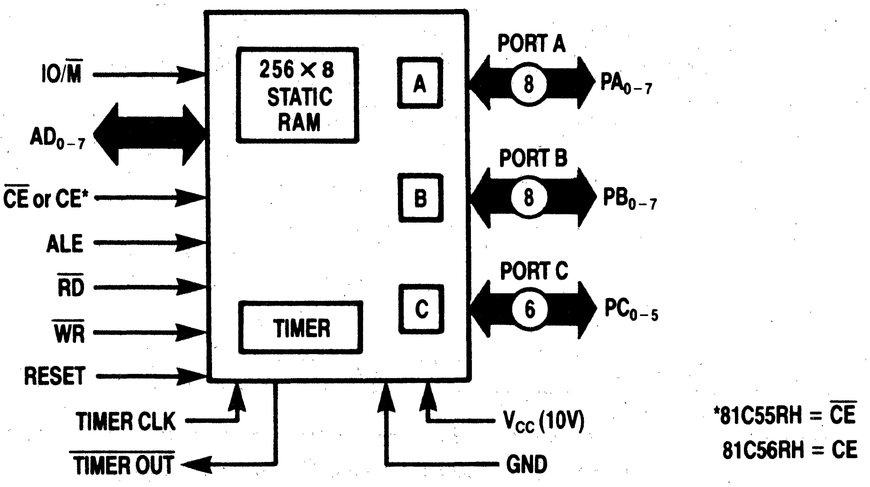
IO/M̄
AD₀₋₇
C̄Ē or CE*
ALE
R̄D̄
W̄R̄
RESET
TIMER CLK
T̄ĪM̄ĒR̄ ŌŪT̄
256 × 8 STATIC RAM
TIMER
A
B
C
PORT A
8
PA₀₋₇
PORT B
8
PB₀₋₇
PORT C
6
PC₀₋₅
V_CC (10V)
GND

***81C55RH = C̄Ē**
81C56RH = CE

---

* For operation at 10 volts and transient levels above 1×10^{10} rad(Si)/sec, please refer to application Note 401.

CAUTION: These devices are sensitive to electronic discharge. Proper I.C. handling procedures should be followed.

Copyright © Harris Corporation 1985

Table 1. Pin Description

Symbol	Type	Name and Function
RESET	I	**Reset:** Pulse provided by the HS-80C85RH to initialize the system (connect to HS-80C85RH RESET OUT). Input high on this line resets the chip and initializes the three I/O ports to input mode. The width of RESET pulse should typically be two HS-80C85RH clock cycle times.
AD_{0-7}	I/O	**Address/Data:** 3-state Address/Data lines that interface with the CPU lower 8-bit Address/Data Bus. The 8-bit address is latched into the address latch inside the HS-81C55/56RH on the falling edge of ALE. The address can be either for the memory section or the I/O section depending on the $IO/\overline{M}$ input. The 8-bit data is either written into the chip or read from the chip, depending on the $\overline{WR}$ or $\overline{RD}$ input signal.
CE or $\overline{CE}$	I	**Chip Enable:** On the HS-81C55RH, this pin is $\overline{CE}$ and is ACTIVE LOW. On the HS-81C56RH, this pin is CE and is ACTIVE HIGH.
$\overline{RD}$	I	**Read Control:** Input low on this line with the Chip Enable active enables and AD_{0-7} buffers. If $IO/\overline{M}$ pin is low, the RAM content will be read out to the AD bus. Otherwise the content of the selected I/O port or command/status registers will be read to the AD bus.
$\overline{WR}$	I	**Write Control:** Input low on this line with the Chip Enable active causes the data on the Address/Data bus to be written to the RAM or I/O ports and command/status register, depending on $IO/\overline{M}$.
ALE	I	**Address Latch Enable:** This control signal latches both the address on the AD_{0-7} lines and the state of the Chip Enable and $IO/\overline{M}$ into the chip at the falling edge of ALE.
$IO/\overline{M}$	I	**I/O Memory:** Selects memory if low and I/O and command/status registers if high.
$PA_{0-7}(8)$	I/O	**Port A:** These 8 pins are general purpose I/O pins. The in/out direction is selected by programming the command register.
$PB_{0-7}(8)$	I/O	**Port B:** These 8 pins are general purpose I/O pins. The in/out direction is selected by programming the command register.
$PC_{0-5}(6)$	I/O	**Port C:** These 6 pins can function as either input port, output port, or as control signals for PA and PB. Programming is done through the command register. When PC_{0-5} are used as control signals, they will provide the following: PC_0 — A INTR (Port A Interrupt) PC_1 — ABF (Port A Buffer Full) PC_2 — $\overline{A\ STB}$ (Port A Strobe) PC_3 — B INTR (Port B Interrupt) PC_4 — B BF (Port B Buffer Full) PC_5 — $\overline{B\ STB}$ (Port B Strobe)
TIMER IN	I	**Timer Input:** Input to the counter-timer.
$\overline{TIMER\ OUT}$	O	**Timer Output:** This output can be either a square wave or a pulse, depending on the timer mode.
V_{CC}	I	**Voltage:** +5 volt to +10 volt supply.
GND	I	**Ground:** Ground reference.

FUNCTIONAL DESCRIPTION

The HS-81C55RH/81C56RH contains the following:

- 2K Bit Static RAM organized as 256 × 8
- Two 8-bit I/O ports (PA & PB) and one 6-bit I/O port (PC)
- 14-bit timer-counter

The $IO/\overline{M}$ (IO/Memory Select) pin selects either the five registers (Command, Status, PA_{0-7}, PB_{0-7}, PC_{0-5}) or the memory (RAM) portion.

The 8-bit address on the Address/Data lines, Chip Enable input CE or $\overline{CE}$ and $IO/\overline{M}$ are all latched on-chip at the falling edge of ALE.

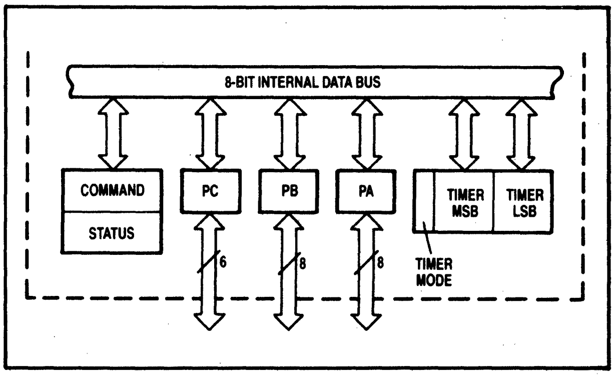

Figure 1. HS-81C55RH/81C56RH Internal Registers

HARRIS

HS-83C55RH

October 1985 ***Advance Information***

Radiation Hardened 2K × 8 CMOS ROM

Features

- Radiation Hardened CMOS Process
- Total Dose .... 1×10^5 RAD(Si)
- Transient Upset .... $>1 \times 10^8$ RAD(Si)/sec
- Latch-up Free EPI-CMOS .... $>1 \times 10^{12}$RAD(Si)*
- Single Power Supply (+5V or +10V Operation)
- Pin-Compatible with INTEL 8355
- Bus-Compatible with HS-80C85RH CPU
- −55°C to +125°C Operation
- Internal Address Latch
- Multiplexed Address and Data Base
- 200ns Max Access Time, Post Radiation at 10 Volts
- 2 General Purpose 8 Bit I/O Ports
- Electrically Equivalent to Sandia SA3001

Pinout

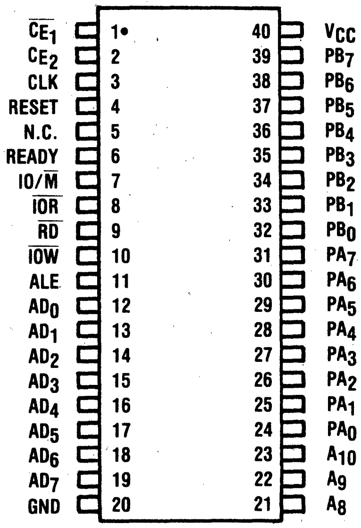
$\overline{CE_1}$ 1 • 40 V_{CC}
CE_2 2 39 PB_7
CLK 3 38 PB_6
RESET 4 37 PB_5
N.C. 5 36 PB_4
READY 6 35 PB_3
$IO/\overline{M}$ 7 34 PB_2
$\overline{IOR}$ 8 33 PB_1
$\overline{RD}$ 9 32 PB_0
$\overline{IOW}$ 10 31 PA_7
ALE 11 30 PA_6
AD_0 12 29 PA_5
AD_1 13 28 PA_4
AD_2 14 27 PA_3
AD_3 15 26 PA_2
AD_4 16 25 PA_1
AD_5 17 24 PA_0
AD_6 18 23 A_{10}
AD_7 19 22 A_9
GND 20 21 A_8

Description

The Harris HS-83C55RH is a ROM and I/O chip intended for use in the HS-80C85RH radiation hardened microprocessor system. Fabricated using the Harris self-aligned silicon gate CMOS process, the chips has a maximum access time of 200ns after exposure to 1×10^5 rads (Si). The chip is designed for operation at +10V, but can be operated at +5V if reduced operating speed is acceptable. The device is electrically equivalent to the Sandia SA3002. Contact your local sales office for sample availability.

Block Diagram

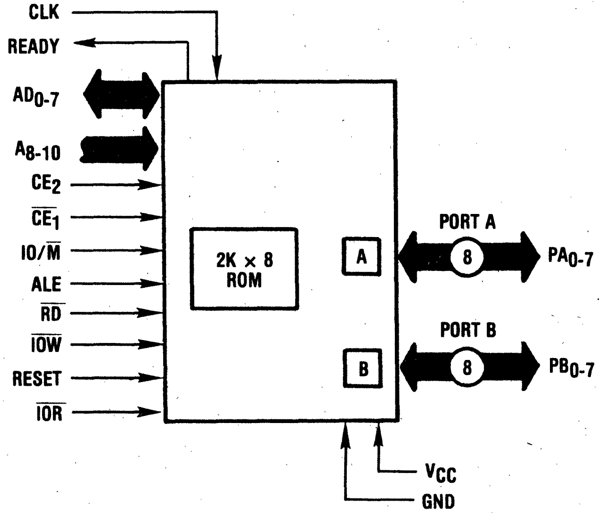
CLK
READY
AD_{0-7}
A_{8-10}
CE_2
$\overline{CE_1}$
$IO/\overline{M}$
ALE
$\overline{RD}$
$\overline{IOW}$
RESET
$\overline{IOR}$
2K × 8 ROM
A
B
PORT A
8
PA_{0-7}
PORT B
8
PB_{0-7}
V_{CC}
GND

* For operation at 10 volts and transient levels above 1×10^{10} rad(Si)/sec, please refer to application Note 401.

CAUTION: These devices are sensitive to electronic discharge. Proper I.C. handling procedures should be followed.

Copyright © Harris Corporation 1985

Table 1. Pin Description

Symbol	Type	Name and Function
ALE	I	**Address Latch Enable:** When high, AD_{0-7}, $IO/\overline{M}$, A_{8-10}, CE_2, and $\overline{CE}_1$ enter the address latches. The signals (AD, $I/O\overline{M}$, A_{8-10}, CE_2, CE_1) are latched in at the trailing edge of ALE.
AD_{0-7}	I	**Address/Data Bus (Bidirectional):** The lower 8-bits of the ROM or I/O address are applied to the bus lines when ALE is high. During an I/O cycle, Port A or B is selected based on the latched value of AD_0. If $\overline{RD}$ or $\overline{IOR}$ is low when the latched chip enables are active, the output buffers present data on the bus.
A_{8-10}	I	**Address Bus:** High order bits of the ROM address. They do not affect I/O operations.
$\overline{CE}_1$ CE_2	I	**Chip Enable Inputs:** $\overline{CE}_1$ is active low and CE_2 is active high. The HS-83C55RH can be accessed only when *BOTH* Chip Enables are active at the time the ALE signal latches them in. If either Chip Enable input is not active, the AD_{0-7} and .READY outputs will be in a high impedance state.
$IO/\overline{M}$	I	**I/O Memory:** If the latched $IO/\overline{M}$ is high when $\overline{RD}$ is low, the output data comes from an I/O port. If it is low, the output data comes from the ROM.
$\overline{RD}$	I	**Read:** If the latched Chip Enables are active when $\overline{RD}$ goes low, the AD_{0-7} output buffers are enabled and output either the selected ROM location or I/O port. When both $\overline{RD}$ and $\overline{IOR}$ are high, the AD_{0-7} output buffers are 3-stated.
$\overline{IOW}$	I	**I/O Write:** If the latched Chip Enables are active, a low on $\overline{IOW}$ causes the output port pointed to by the latched value of AD_0 to be written with the data on AD_{0-7}. The state of $IO/\overline{M}$ is ignored.
CLK	I	**Clock:** Used to force the READY into its high impedance state after it has been forced low by $\overline{CE}_1$ low, CE_2 high and ALE high.
READY	0	**READY:** A 3-state output controlled by $\overline{CE}_1$, CE_2, ALE and CLK. READY is forced low when the Chip Enables are active during the time ALE is high, and remains low until the rising edge of the next CLK.
PA_{0-7}	I/O	**Port A:** General purpose I/O pins. Their input/output direction is determined by the contents of the Data Direction Register (DDR). Port A is selected for write operations when the Chip Enables are active and $\overline{IOW}$ is low and a 0 was previously latched from AD_0, AD_1. Read operation is selected by either $\overline{IOR}$ low and active Chip Enables and AD_0 and AD_1 low, *or* $IO/\overline{M}$ high, RD low, active chip enables, and AD_0 and AD_1, LOW.
PB_{0-7}	I/O	**Port B:** This general purpose I/O port is identical to Port A except that it is selected by a 1 latched from AD_0 and a 0 from AD_1.
RESET	I	**Reset:** An input high causes all pins in Port A and B to assume input mode. (Clear DDR Register.)
$\overline{IOR}$	I	**I/O Read:** When the Chip Enables are active, a low on $\overline{IOR}$ will output the selected I/O port onto the AD bus. $\overline{IOR}$ low performs the same function as the combination $IO/\overline{M}$ high and $\overline{RD}$ low. When $\overline{IOR}$ is not used in a system, $\overline{IOR}$ should be tied to V_{CC}.
V_{CC}	I	**Voltage:** +5 volt to +10 volt supply.
GND	I	**Ground:** Ground Reference.

Functional Description

ROM Section

The HS-83C55RH contains an 8-bit address latch which allows it to interface directly to the HS-80C85RH Microprocessor without additional hardware.

The ROM section of the chip is addressed by an 11-bit address and the Chip Enables. The address and levels on the Chip Enable pins are latched into the address latches on the falling edge of ALE. If the latched Chip Enables are active and $IO/\overline{M}$ is low when $\overline{RD}$ goes low, the contents of the ROM location addressed by the latched address are put out through AD_{0-7} output buffers.

I/O Section

The I/O section of the chip is addressed by the latched value of AD_{0-1}. Two 8-bit Data Direction Registers (DDR) in the HS-83C55RH determine the input/output status of each pin in the corresponding ports. A "0" in a particular bit position of a DDR signifies that the corresponding I/O port bit is in the input mode. A "1" in a particular bit position signifies that the corresponding I/O port bit is in the output mode. In this manner the I/O ports of the HS-83C55RH are bit-by-bit programmable as inputs or outputs. The table summarizes port and DDR designation. DDR's cannot be read.

AD_1	AD_0	Selection
0	0	Port A
0	1	Port B
1	0	Port A Data Direction Register (DDR A)
1	1	Port B Data Direction Register (DDR B)

When $\overline{IOW}$ goes low and the Chip Enables are active, the data on the AD_{0-7} is written into the I/O port selected by the latched value of AD_{0-1}. During this operation all I/O bits of selected port are affected, regardless of their I/O mode and the state of $IO/\overline{M}$. The actual output level does not change until $\overline{IOW}$ returns high (glitch free output). A port can be read out when the latched Chip Enables are active and either $\overline{RD}$ goes low with $IO/\overline{M}$ high, or $\overline{IOR}$ goes low. Both input and output mode bits of a selected port will appear on lines AD_{0-7}.

HARRIS

HS-54C138RH

Radiation Hardened 3-Line to 8-Line Decoder/Demultiplexer

October 1985 ***Preliminary***

Features

- **Radiation-Hardened**
  - **▶ Total Dose .... 1 × 10^5 RAD(Si)**
  - **▶ Latch-up Immune EPI-CMOS .... >1 × 10^{12} RAD(Si)***
- **Multiple Input Enable for Easy Expansion**
- **Single Power Supply .... +5V or +10V**
- **Outputs Active Low**
- **Low Standby Power .... (1.0mW MAX @10V) (0.5mW MAX @5V)**
- **High Noise Immunity**
- **Equivalent to Sandia SA2995**
- **Bus Compatible with Harris RAD-HARD 80C85RH**
- **Full Mil Tem Range .... −55°C to +125°C**

Pinout

(TOP VIEW)

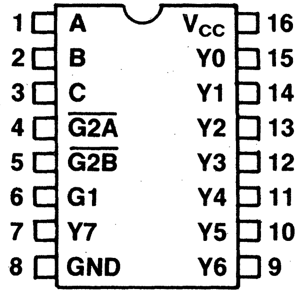
1 A
2 B
3 C
4 $\overline{G2A}$
5 $\overline{G2B}$
6 G1
7 Y7
8 GND
16 V$_{CC}$
15 Y0
14 Y1
13 Y2
12 Y3
11 Y4
10 Y5
9 Y6

Description

The Harris HS-54C138RH is a radiation hardened 3 to 8 decoder fabricated using a radiation hardened EPI-CMOS process. It features low power consumption, high noise immunity, and high speed. Also featured are pin and function compatibility with the 54LS138 industry standard part. The HS-54C138RH is ideally suited for high speed memory chip select address decoding. It is intended for use with the Harris HS-80C85RH radiation hardened microprocessor, but it can also be utilized as a demultiplexer in any low power rad-hard application. (See section on applications.)

The HS-54C138RH contains a one of eight binary decoder. A three bit binary input is used to select and activate each of the eight outputs, provided the three chip enable inputs are also present (see truth table).

The HS-54C138RH has an on-chip enable gate. The active high (G1) and both active low ($\overline{G2A}$,$\overline{G2B}$) inputs are Anded together to provide a single enable input to the device. See logic diagram on page 1. The use of both active high and active low inputs minimizes the need for external gates when expanding a system.

Logic Symbol (IEEE/IEC)

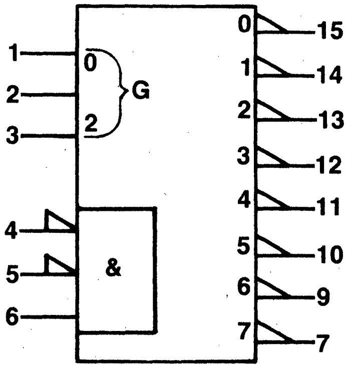
1
2
3
0
2
G
4
5
6
&
0 15
1 14
2 13
3 12
4 11
5 10
6 9
7 7

Logic Symbol

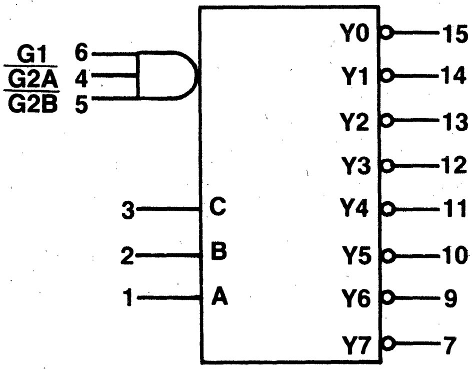
G1 6
$\overline{G2A}$ 4
$\overline{G2B}$ 5
3 C
2 B
1 A
Y0 15
Y1 14
Y2 13
Y3 12
Y4 11
Y5 10
Y6 9
Y7 7

V$_{CC}$ = PIN 16
GND = PIN 8

---

* For operation at 10 volts and transient levels above 1 × 10^{10} rad(Si)/sec, please refer to application Note 401.

Logic Diagram

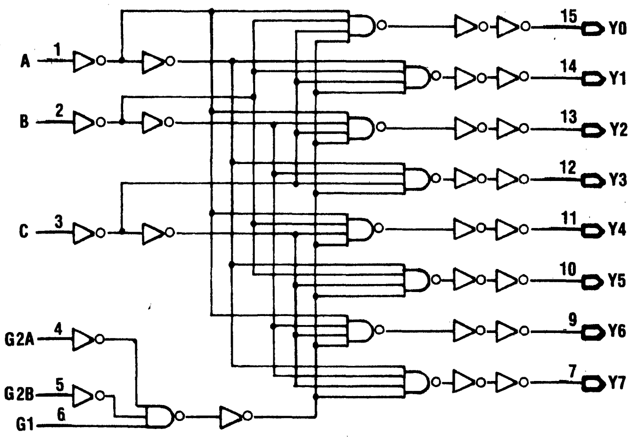

Truth Table

SELECT			ENABLE			DATA OUTPUTS							
C	B	A	G2A	G2B	G1	Y0	Y1	Y2	Y3	Y4	Y5	Y6	Y7
L	L	L	L	L	H	L	H	H	H	H	H	H	H
L	L	H	L	L	H	H	L	H	H	H	H	H	H
L	H	L	L	L	H	H	H	L	H	H	H	H	H
L	H	H	L	L	H	H	H	H	L	H	H	H	H
H	L	L	L	L	H	H	H	H	H	L	H	H	H
H	L	H	L	L	H	H	H	H	H	H	L	H	H
H	H	L	L	L	H	H	H	H	H	H	H	L	H
H	H	H	L	L	H	H	H	H	H	H	H	H	L
X	X	X	L	L	L	H	H	H	H	H	H	H	H
X	X	X	H	L	L	H	H	H	H	H	H	H	H
X	X	X	L	H	L	H	H	H	H	H	H	H	H
X	X	X	H	H	L	H	H	H	H	H	H	H	H
X	X	X	H	L	H	H	H	H	H	H	H	H	H
X	X	X	L	H	H	H	H	H	H	H	H	H	H
X	X	X	H	H	H	H	H	H	H	H	H	H	H

H = High level
L = Low level
X = Don't care

Absolute Maximum Ratings

Supply Voltage (VDD to GND) .... +11.0 Volts
Input or Output Voltage Applied .... (Gnd −0.3V) to (VDD +0.3V)
Storage Temperature Range .... −65 C to +150 C

As with all semiconductors, stresses listed under "Absolute Maximum Ratings" may be applied to devices (one at a time) without resulting in permanent damage. This is a stress rating only. Exposure to absolute maximum rating conditions for extended periods may affect device reliability. The conditions listed under "Electrical Characteristics" are the only conditions recommended for satisfactory operation.

Capacitance

SYMBOL	PARAMETER	MIN	MAX	PRE-RAD	POST RAD	UNITS
CIN *	Input Capacitance Select Input Pin Enable Input Pin			 6 6		 pF pF
COUT *	Output Capacitance Output Pin			 30		 pF

* Guaranteed but not tested.

HARRIS

HS-3374RH

Radiation Hardened
8 Bit Bidirectional CMOS/TTL
Level Converter

October 1985 **Preliminary Information**

Features

- Radiation Hardened EPI-CMOS
    - ▸ Functional Total Dose .... 1 × 10^5 RAD(Si)
    - ▸ Latch-up Immune .... >1 × 10^{12}RAD(Si)/sec*
- Low Propagation Delay Time
    - ▸ Typical CMOS to TTL Pre-Rad 30ns
    - ▸ Typical CMOS to TTL Post 100K Rads 30ns
    - ▸ Typical TTL to CMOS Pre-Rad 35ns
    - ▸ Typical TTL to CMOS Post 100K Rads 35ns
- Low Standby Power
- +10V CMOS and +5V TTL Power Supply Inputs
- Eight Non-Inverting Three State Input/Output Channels
- No External TTL Input Pull Up Resistors Required
- High TTL Sink Current
- Equivalent to Sandia SA2996
- Full Mil Temp Range .... −55°C to +125°C

Pinout

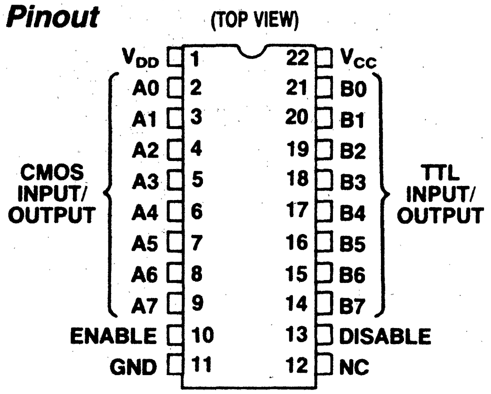
(TOP VIEW)
VDD 1
A0 2
A1 3
A2 4
A3 5
A4 6
A5 7
A6 8
A7 9
ENABLE 10
GND 11
22 VCC
21 B0
20 B1
19 B2
18 B3
17 B4
16 B5
15 B6
14 B7
13 DISABLE
12 NC
CMOS INPUT/ OUTPUT
TTL INPUT/ OUTPUT

Description

The Harris HS-3374RH is a radiation-hardened 8-Bit bidirectional level converter designed to interface CMOS logic levels with TTL logic levels in radiation-hardened bus oriented systems. The HS-3374RH is fabricated using a radiation hardened EPI-CMOS process and features eight parallel bidirectional buffer/level converters.

Two control inputs, ENABLE and DISABLE, are used to determine the direction of data flow, and to set both the inputs and outputs in the high impedance state. The control inputs may be driven by either TTL or CMOS logic drivers capable of sinking one standard TTL load.

The HS-3374RH is a non-inverting version of the industry-standard CD40116. The non-inverting outputs of the HS-3374RH reduce PC board chip count by eliminating the need to restore data back to a non-inverted format.

Functional Diagram

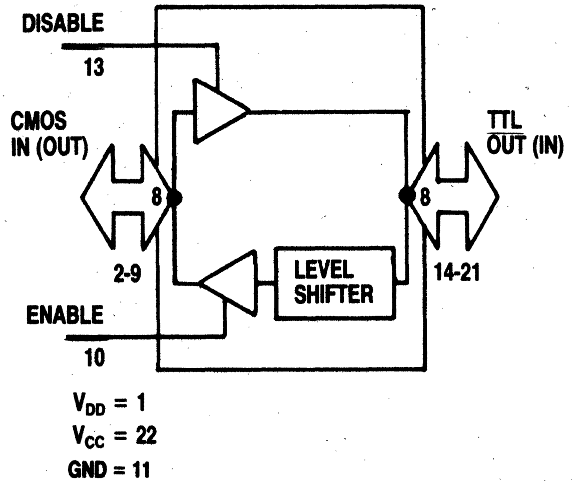
DISABLE
13
CMOS IN (OUT)
8
2-9
ENABLE
10
LEVEL SHIFTER
TTL OUT (IN)
8
14-21
VDD = 1
VCC = 22
GND = 11

---

* For operation at 10 volts and transient levels above 1 × 10^{10} rad(Si)/sec, please refer to application Note 401.

CAUTION: These devices are sensitive to electronic discharge. Proper I.C. handling procedures should be followed.

Copyright © Harris Corporation 1985

Functional Block Diagram

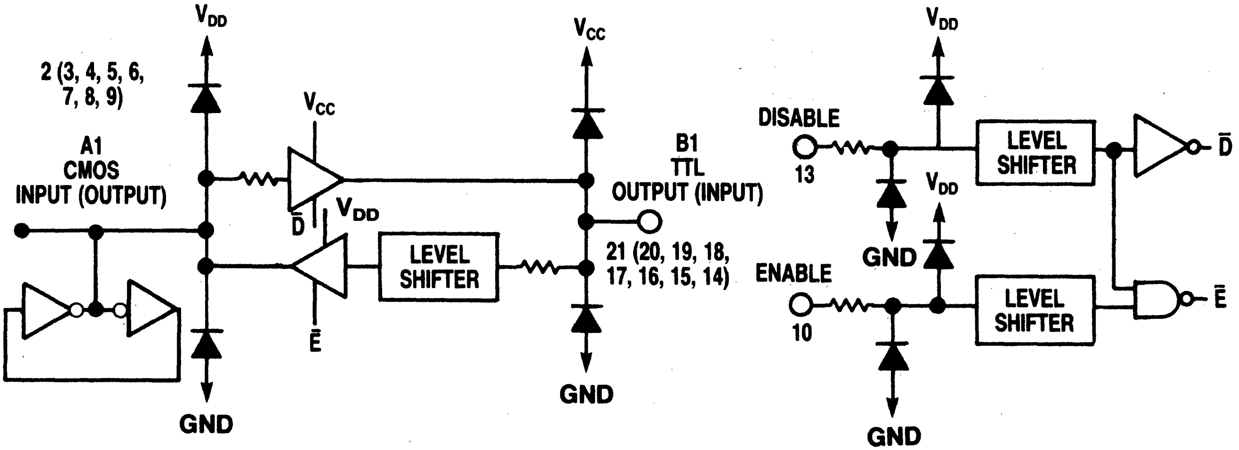
VDD
2 (3, 4, 5, 6,
7, 8, 9)
A1
CMOS
INPUT (OUTPUT)
VCC
D̄
VDD
LEVEL SHIFTER
Ē
GND
VCC
B1
TTL
OUTPUT (INPUT)
21 (20, 19, 18,
17, 16, 15, 14)
GND
VDD
DISABLE
13
VDD
GND
ENABLE
10
LEVEL SHIFTER
D̄
LEVEL SHIFTER
Ē
GND

1 OF 8 IDENTICAL CIRCUITS

ENABLE AND DISABLE ARE TTL TYPE INPUTS

D̄ AND Ē OUTPUTS ARE COMMON TO ALL 8 CHANNELS

Input (Output)		Output (Input)	
Data	Terminal No.	Data	Terminal No.
A0	2	B0	21
A1	3	B1	20
A2	4	B2	19
A3	5	B3	18
A4	6	B4	17
A5	7	B5	16
A6	8	B6	15
A7	9	B7	14

Truth Table

ENABLE	DISABLE	FUNCTION
X	0	Convert CMOS Level to TTL Level
1	1	Convert TTL Level to CMOS Level
0	1	High Impedance (Z)

0 = Low Level   1 = High Level   X = Don't Care
Z= High Impedance on both CMOS and TTL sides.

Note: A regenerative latch is provided on all CMOS pins. This feature allows CMOS output logic levels to be maintained when the HS-3374RH is configured in the high impedance state.

CAVE AT: Do not activate the Disable input by hardwiring to any TTL input pins. This is an incorrect mode of operation.

HARRIS

HS-82C08RH

Radiation Hardened 8 Bit Bus Transceiver

October 1985 *Preliminary Information*

Features

- Radiation-Hardened
  - ▸ Total Dose .... 1 × 10^5 RAD(Si)
  - ▸ Latch-up Immune EPI-CMOS .... >1 × 10^{12}RAD(Si)/sec*
- Bidirectional Three-State Input/Outputs
- Low Propagation Delay Time
- Low Power Consumption
- Single Power Supply .... +5V or +10V Operation
- Electrically Equivalent to Sandia SA2997
- −55°C to +125°C Temperature Operation

Pinout

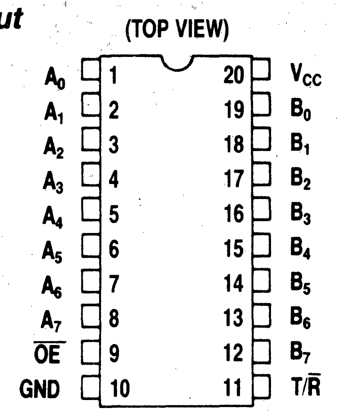

Description

The Harris HS-82C08RH is a radiation-hardened octal bus transceiver with three-state outputs. It is manufactured using a self-aligned, junction isolated CMOS process and is designed for use with the HS-80C85RH radiation-hardened microprocessor. The HS-82C08RH allows asynchronous two-way communication between data buses. The direction of data flow is determined by the logic level on the transmit/receive ($\overline{T}/R$) input. A logic high on the $\overline{T}/R$ input specifies data flow from Port A to Port B of the device. Conversely, a logic low on the T/R input specifies data flow from Port B to Port A. The Output Enable input disables both ports by placing them in the high impedance state.

The HS-82C08RH is ideally suited for a wide variety of buffering applications in radiation-hardened microcomputer systems.

Functional Diagram

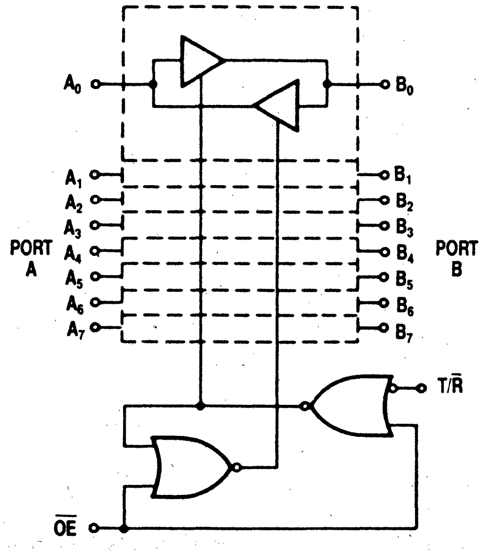

PIN NAMES

A_0-A_7	LOCAL BUS DATA I/O PINS
B_0-B_7	SYSTEM BUS DATA I/O PINS
$T/\overline{R}$	TRANSMIT/RECEIVE INPUT
$\overline{OE}$	ACTIVE LOW OUTPUT ENABLE

Truth Table

INPUTS		OPERATION	
Output Enable	Transmit/Receive	PORT A	PORT B
0	0	OUT	IN
0	1	IN	OUT
1	X	High Z	High Z

X = don't care

* For operation at 10 volts and transient levels above 1 × 10^{10} rad(Si)/sec, please refer to application Note 401.

CAUTION: These devices are sensitive to electronic discharge. Proper I.C. handling procedures should be followed. Copyright © Harris Corporation 1985

HARRIS

HS-82C12RH

Radiation Hardened 8-Bit Input/Output Port

October 1985

Preliminary

Features

- Radiation Hardened CMOS Process
  - ▸ Latch-up Immune EPI-CMOS ..... $>1 \times 10^{12}$ Rad(Si)/sec*
  - ▸ Total Dose .... 1×10^{5} Rad(Si)
  - ▸ Transient Upset .... 1×10^{8} Rad(Si)/sec
- Low Power Dissipation
- High Noise Immunity
- Single Power Supply .... +5V or +10V
- Low Input Load Current
- 8-Bit Data Register and Buffer
- Asynchronous Register Clear
- Service Request Flip-Flop for Interrupt Generation
- Three-State Outputs
- Bus-Compatible with HS-80C85RH CPU
- Electrically Equivalent to Sandia SA3026
- −55°C to +125°C operation

Pinout

TOP VIEW

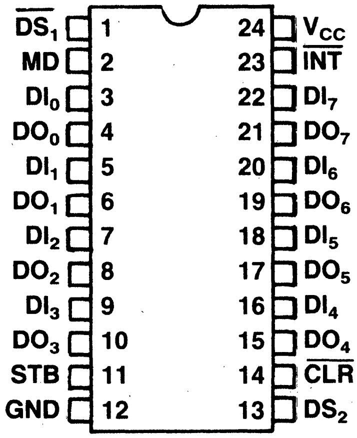
$\overline{DS_1}$ 1
MD 2
DI_0 3
DO_0 4
DI_1 5
DO_1 6
DI_2 7
DO_2 8
DI_3 9
DO_3 10
STB 11
GND 12
24 V_{CC}
23 $\overline{INT}$
22 DI_7
21 DO_7
20 DI_6
19 DO_6
18 DI_5
17 DO_5
16 DI_4
15 DO_4
14 $\overline{CLR}$
13 DS_2

Description

The Harris HS-82C12RH is a radiation hardened 8-bit input/output port designed for use with the HS-80C85RH radiation hardened microprocessor. It is manufactured using a self-aligned, junction-isolated EPI-CMOS process and features 3-state output buffers, and device selection and control logic. A service request flip-flop is included for the generation and control of interrupts to the microprocessor. The device can be used to implement many of the peripheral and input/output functions of a microcomputer system. The HS-82C12RH is pinout- and function-compatible with industry-standard 8212 devices.

Functional Diagram

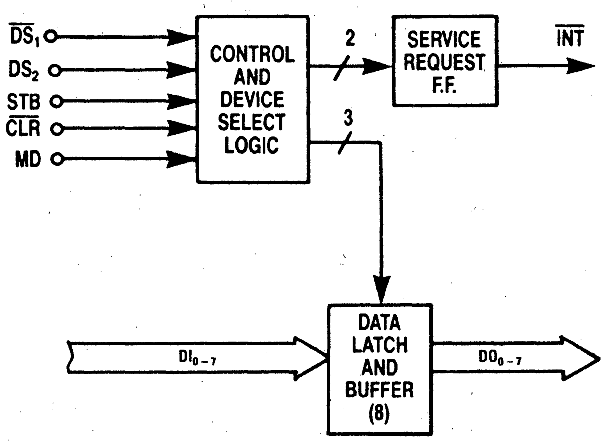
$\overline{DS}_1$
DS_2
STB
$\overline{CLR}$
MD
CONTROL AND DEVICE SELECT LOGIC
2
3
SERVICE REQUEST F.F.
$\overline{INT}$
DI_{0-7}
DATA LATCH AND BUFFER (8)
DO_{0-7}

$DI_0 - DI_7$	DATA IN
$DO_0 - DO_7$	DATA OUT
$\overline{DS}_1$, DS_2	DEVICE SELECT
MD	MODE
STB	STROBE
$\overline{INT}$	INTERRUPT
$\overline{CLR}$	CLEAR

---

* For operation at 10 volts and transient levels above 1×10^{10} rad(Si)/sec, please refer to application Note 401.

CAUTION: These devices are sensitive to electronic discharge. Proper I.C. handling procedures should be followed. Copyright © Harris Corporation 1985

Copyright © Harris Corporation 1985.

LOGIC DIAGRAM

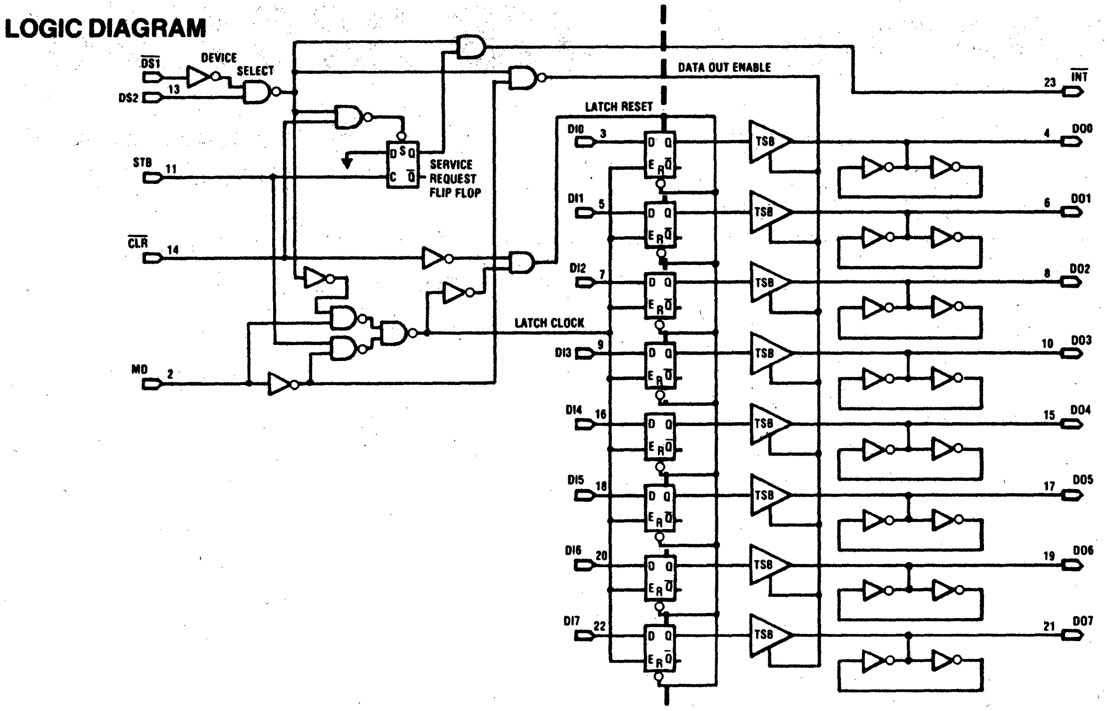

Truth Table I
DATA OUT

STB	MD	$\overline{DS_1} \cdot DS_2$	DATA OUT EQUALS
0	0	0	HIGH-Z STATE
1	0	0	HIGH-Z STATE
0	1	0	DATA LATCH
1	1	0	DATA LATCH
0	0	1	DATA LATCH
1	0	1	DATA IN
0	1	1	DATA IN
1	1	1	DATA IN

Truth Table II
$\overline{INT}$

$\overline{CLR}$	$\overline{DS_1} \cdot DS_2$	STB	Q*	$\overline{INT}$
0	0	0	1	1
0	1	0	1	0
1	1	˥_	0	0
1	1	0	1	0
1	0	0	1	1

*Internal Service Request flip-flop.

FUNCTIONAL DESCRIPTION

Data Latch

The data latch is comprised of eight "D" type flip-flops. The output of each flip-flop will follow the corresponding data input (DI_{0-7}) when the clock (C) is high. The clock input is level sensitive and the data becomes latched when the clock returns low.

An asynchronous reset ($\overline{CLR}$) is used to clear the latched data. Since the clock (C) overrides the reset ($\overline{CLR}$), the data must be in the latched state in order to clear the flip-flops. If the data is not latched (i.e., clock is high) when $\overline{CLR}$ goes low, then the Q outputs of the data latch will continue to follow the data inputs, overriding the reset signal.

Output Buffer

Three-state buffers are used to provide output drive for the data latch. A high level on the "output buffer enable" control line enables the buffer outputs. When "output buffer enable" is low the buffer outputs are forced to the high-impedance state.

Device Select Logic

The inputs $\overline{DS1}$ and DS2 are used for device selection. When $\overline{DS1}$ is low and DS2 is high, the device is selected. The output buffers are enabled and the service request flip-flop is asynchronously cleared when the device is selected.

Mode

The mode input (MD) is used to control the state of the output buffer and to determine the source of the data latch clock (C). When MD is high, the output buffers are enabled and the source of the data latch clock (C) is the device select logic ($\overline{DS1} \cdot DS2$).

When MD is low, the state of the output buffer is controlled by the device select logic ($\overline{DS1} \cdot DS2$) and the source of the data latch clock is the strobe (STB) input.

Strobe

The strobe input (STB) is used as the data latch clock (C) when the mode input (MD) is low. The service request flip-flop is synchronously set on the negative going edge of STB.

Service Request Flip-Flop

The service request flip-flop is to generate interrupts to microcomputer systems. It is negative edge triggered and asynchronously cleared (reset).

The output of the service request flip-flop is AND-gated with the device select logic ($\overline{DS1} \cdot DS2$). The output of the AND gate is the active low interrupt ($\overline{INT}$) signal.

HARRIS

HS-80C86RH

PREVIEW

October 1985

Radiation Hardened CMOS 16 Bit Microprocessor

Features

- Pin Compatible with NMOS 8086 and Harris 80C86
- Radiation Hardened
  - Latch Up Free Epi-CMOS
  - Total Dose > 100K RAD(Si)
  - Transient Upset > 10^8 RAD(Si)/sec
  - Total dose capabilities above 1 x 10^5 are available. Contact factory for details.
- Completely Static Design
  - DC to 5MHz
- Low Power Operation
  - ICCSB = 500μA Maximum
  - ICCOP = 10mA/MHz Typical
- 1 Mbyte of Direct Memory Addressing Capability
- 24 Operand addressing Modes
- Bit, Byte, Word, and Block Move Operations
- 8 and 16 Bit Signed/Unsigned Arithmetic
  - Binary or Decimal
  - Multiply and Divide
- Bus-hold Circuitry Eliminates Pull-up Resistors
- Hardened SAJI IV CMOS Process
- Single 5V Power Supply
- Military Temperature Range

Description

The Harris HS-80C86RH high performance radiation hardened 16 bit CMOS CPU is manufactured using a hardened field, self-aligned silicon gate CMOS process. Two modes of operation, MINimum for small systems and MAXimum for larger applications such as multi-processing, allow user configuration to achieve the highest performance level. Full TTL compatibility and industry standard operation allow use of existing NMOS 8086 hardware and software designs.

Pinout

TOP VIEW

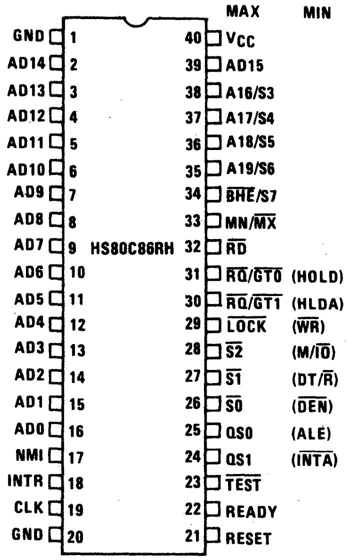
MAX
MIN
GND 1
AD14 2
AD13 3
AD12 4
AD11 5
AD10 6
AD9 7
AD8 8
AD7 9
AD6 10
AD5 11
AD4 12
AD3 13
AD2 14
AD1 15
AD0 16
NMI 17
INTR 18
CLK 19
GND 20
HS80C86RH
40 VCC
39 AD15
38 A16/S3
37 A17/S4
36 A18/S5
35 A19/S6
34 BHE/S7
33 MN/MX
32 RD
31 RQ/GT0 (HOLD)
30 RQ/GT1 (HLDA)
29 LOCK (WR)
28 S2 (M/IO)
27 S1 (DT/R)
26 S0 (DEN)
25 QS0 (ALE)
24 QS1 (INTA)
23 TEST
22 READY
21 RESET

Functional Diagram

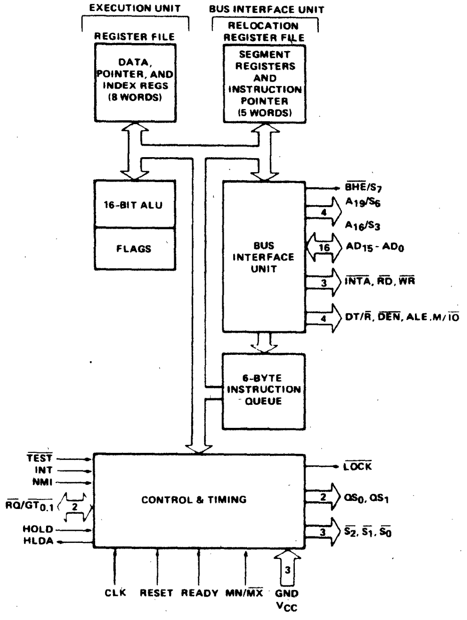
EXECUTION UNIT
REGISTER FILE
DATA, POINTER, AND INDEX REGS (8 WORDS)
BUS INTERFACE UNIT
RELOCATION REGISTER FILE
SEGMENT REGISTERS AND INSTRUCTION POINTER (5 WORDS)
16-BIT ALU
FLAGS
BUS INTERFACE UNIT
BHE/S7
A19/S6
4
A16/S3
16
AD15 - AD0
3
INTA, RD, WR
4
DT/R, DEN, ALE, M/IO
6-BYTE INSTRUCTION QUEUE
TEST
INT
NMI
RQ/GT0,1
2
HOLD
HLDA
CONTROL & TIMING
LOCK
2
QS0, QS1
3
S2, S1, S0
CLK
RESET
READY
MN/MX
3
GND
VCC

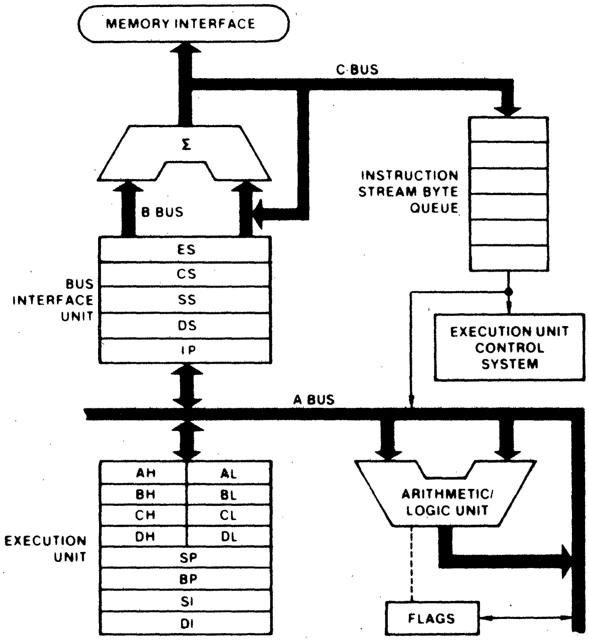
MEMORY INTERFACE
C BUS
Σ
B BUS
INSTRUCTION STREAM BYTE QUEUE
BUS INTERFACE UNIT
ES
CS
SS
DS
IP
EXECUTION UNIT CONTROL SYSTEM
A BUS
AH
AL
BH
BL
CH
CL
DH
DL
SP
BP
SI
DI
EXECUTION UNIT
ARITHMETIC/ LOGIC UNIT
FLAGS

CAUTION: Electronic devices are sensitive to electrostatic discharge. Proper I.C. handling procedures should be followed.

Copyright © Harris Corporation 1985

HARRIS

HS-6504RH

Radiation Hardened 4096 × 1 CMOS RAM

October 1985

Features

• LOW POWER STANDBY	1050 μW MAX.
• LOW POWER OPERATION	36.75mW/MHz MAX.
• EXTREMELY LOW SPEED POWER PRODUCT	
• TOTAL DOSE	1 X 10^5 RAD Si
• DATA UPSET	$>10^8$ RADS Si/SEC.
• LATCH-UP FREE TO	$> 2 \times 10^{12}$ RAD Si/SEC.
• SINGLE EVENT UPSET IMMUNE OPTION	
• TTL COMPATABLE INPUT/OUTPUT	
• THREE-STATE OUTPUTS	
• STANDARD JEDEC PINOUT	
• FAST ACCESS TIME	150ns TYP.
• MILITARY TEMPERATURE RANGE	
• 18 PIN PACKAGE FOR HIGH DENSITY	
• ON-CHIP ADDRESS REGISTER	

Pinout

TOP VIEW

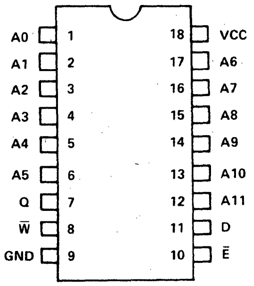
A0 1
A1 2
A2 3
A3 4
A4 5
A5 6
Q 7
$\overline{W}$ 8
GND 9
18 VCC
17 A6
16 A7
15 A8
14 A9
13 A10
12 A11
11 D
10 $\overline{E}$

TOP VIEW

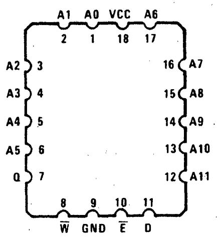
A1 A0 VCC A6
2 1 18 17
A2 3
A3 4
A4 5
A5 6
Q 7
16 A7
15 A8
14 A9
13 A10
12 A11
8 9 10 11
$\overline{W}$ GND $\overline{E}$ D

A – Address Input
$\overline{E}$ – Chip Enable
$\overline{W}$ – Write Enable
D – Data Input
Q – Data Output

Description

The HS-6504RH is a synchronous 4096 x 1 static CMOS RAM fabricated using the Harris Custom Integrated Circuits Division radiation hardened guard banded, self-aligned silicon gate technology. The device utilizes synchronous circuitry to achieve high performance and low power operation.

Latch-up free operation is achieved by the use of epitaxial starting material to eliminate the parasitic SCR effect seen in conventional bulk CMOS devices. On-chip latches are provided for addresses, data input and data output allowing efficient interfacing with microprocessor systems. The data output can be forced to a high impedance state for use in expanded memory arrays.

The HS-6504RH is a fully static RAM and may be maintained in any state for an indefinite period of time.

Functional Diagram

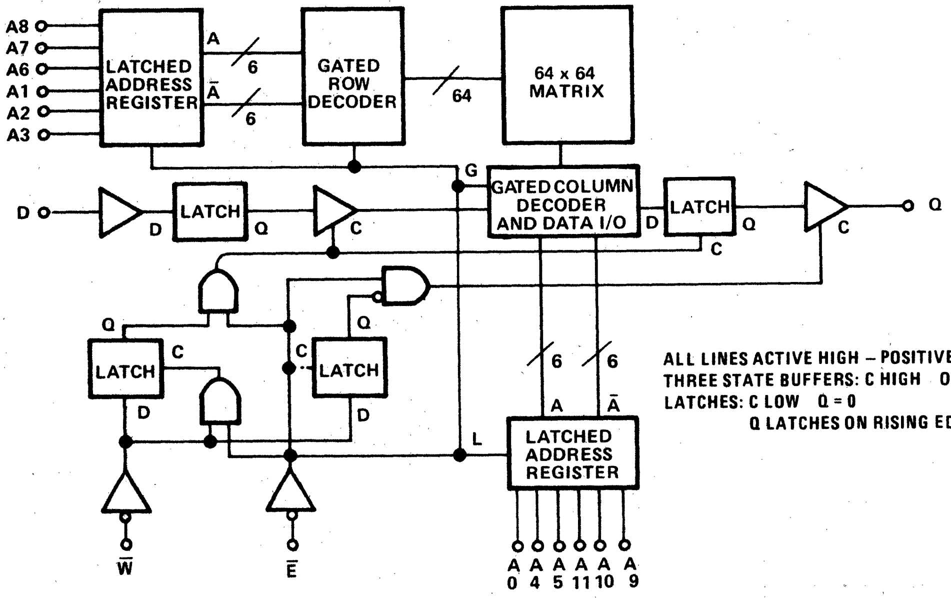
A8
A7
A6
A1
A2
A3
LATCHED ADDRESS REGISTER
A
6
$\overline{A}$
6
GATED ROW DECODER
64
64 x 64 MATRIX
G
D
LATCH
D
Q
C
GATED COLUMN DECODER AND DATA I/O
D
LATCH
Q
C
C
Q
Q
LATCH
C
D
C
LATCH
Q
D
6
6
A
$\overline{A}$
L
LATCHED ADDRESS REGISTER
$\overline{W}$
$\overline{E}$
A 0
A 4
A 5
A 11
A 10
A 9

ALL LINES ACTIVE HIGH – POSITIVE LOGIC
THREE STATE BUFFERS: C HIGH OUTPUT ACTIVE
LATCHES: C LOW Q = 0
Q LATCHES ON RISING EDGE OF C

Copyright © Harris Corporation 1985

ABSOLUTE MAXIMUM RATINGS *		**OPERATING RANGE**	
Supply Voltage -(VCC-GND)	-0.3 V to +7.0V	Operating Supply Voltage	4.75V to 5.25V
Input or Output Voltage Applied	GND -0.3V to VCC +0.3V	Operating Temperature	
		Standard RAM	-55°C to +125°C
Storage Temperature	-65°C to +150°C	S.E.U. Immune RAM	-20°C to +80°C

*CAUTION: *As with all semiconductors, stresses listed under "Absolute Maximum Ratings" may be applied to devices (one at a time) without resulting in permanent damage. This is a stress rating only. Exposure to absolute maximum rating conditions for extended periods may affect device reliability. The conditions listed under "Electrical Characteristics" are the only conditions recommended for satisfactory operation.*

ELECTRICAL CHARACTERISTICS ⑤⑥

			TEMP & V_{CC} = OPERATING RANGE		TEMP = 25°C① V_{CC} = 5.0V TYPICAL			
	SYMBOL	PARAMETER	MIN	MAX	PRE-RAD	POST 100K RADS	UNITS	TEST CONDITIONS
DC	ICCSB	Standby Supply Current		200	6	6	μA	IO = 0 VI = GND or VCC
	ICCOP	Operating Supply Current②		7	4		mA	f = 1MHz, IO = 0 VI = VCC or GND
	ICCDR	Data Retention Current		100	4	4	μA	
	VCCDR	Data Retention Voltage ⑦		3.0	2.6	1.8	V	
	II	Input Leakage Current	-1.0	+1.0	0.0	0.0	μA	GND≤VI≤ VCC
	IOZ	Output Leakage Current	-10	+10	±0.2	±0.2	μA	GND≤VO≤ VCC
	VIL	Input Low Voltage	-0.3	0.8	1.3	1.1	V	
	VIH	Input High Voltage All Except E and R/W	V_{CC} -2.0	V_{CC} +0.3	2.5	2.2	V	
	VIH	Input High Voltage E and R/W	V_{CC} -1.5	V_{CC} +0.3				
	VOL	Output Low Voltage		0.4	0.2	0.15	V	IOL = 2.0mA
	VOH	Output High Voltage	2.4		4.7	4.1	V	IOH = -1.0mA
	CI	Input Capacitance③		8.0	5.0	5.0	pF	VI = VCC or GND
	CO	Output Capacitance③		10.0	6.0	6.0	pF	VO = VCC or GND f = 1MHz
AC	TELQV	Chip Enable Access Time		200	150	120	ns	④
	TAVQV	Address Access Time		210	150	120	ns	④
	TELQX	Chip Enable/Output Enable Time		50	40	30	ns	④
	TEHQZ	Chip Enable/Output Disable		50	40	30	ns	④
	TELEH	Chip Enable Time	200		150	170	ns	④
	TEHEL	Chip Disable Time	50		30	40	ns	④
	TAVEL	Address Set-up Time	10		-10	0	ns	④
	TELAX	Address Hold Time	40		20	30	ns	④
	TWLWH	Write Enable Pulse Width	50		30	40	ns	④
	TWLEH	Write Enable Set-up Time	200		150	170	ns	④
	TWLEL	Early Write Pulse Set-up	0		-20	-10	ns	④
	TWHEL	Read Mode Write Enable Set-up	0		-20	-10	ns	④
	TELWH	Write Enable Hold Time	50		30	40	ns	④
	TDVWL	Data Set-up Time	10		-10	0	ns	④
	TDVEL	Early Write Data Set-up	10		-20	-10	ns	④
	TWLDX	Data Hold Time	40		20	30	ns	④
	TELDX	Early Write Data Hold	40		20	30	ns	④
	TWLEL	Early Output High-Z Time	0		-20	-10	ns	④
	TQVWL	Data Valid to Write Time	0		-20	-10	ns	④
	TELEL	Read or Write Cycle Time	250		180	210	ns	④

NOTES:
1. All devices guaranteed at worst case limits. Room temp., 5 volt data provided for information but not guaranteed. Post Rad Data at TD 1 x 10^5
2. Operating Supply Current (ICCOP) is proportional to Operating Frequency.
3. Capacitance sampled and guaranteed — not 100% tested.
4. AC test Conditions: Inputs: T_{RISE} T_{FALL}≤20nsec; Outputs: 1 TTL Load and 50pF. All timing measurements at ½ VCC.
5. Pre-Radiation and Post-Radiation limits.
6. Devices screened to more rigorous electrical specifications are available. Contact factory for details.
7. Single event upset immunity is guaranteed over the operating votlage of 5V ±5%.

HARRIS

HS-6508RH

1024 x 1 CMOS RAM

Features

- FUNCTIONAL TOTAL DOSE .... 2 x 10^4 RAD Si
- LATCH-UP FREE TO .... 5.0 x 10^{11} RAD Si/sec
- LOW STANDBY POWER .... 550µW MAX
- LOW OPERATING POWER .... 25mW/MHz MAX
- FAST ACCESS TIME .... 300nsec MAX
- TTL COMPATIBLE IN/OUT
- HIGH OUTPUT DRIVE – 2 TTL LOADS
- HIGH NOISE IMMUNITY
- ON-CHIP ADDRESS REGISTER
- MILITARY TEMPERATURE RANGE
- THREE-STATE OUTPUTS
- 16 PIN PACKAGE FOR HIGH DENSITY

Pinout

TOP VIEW

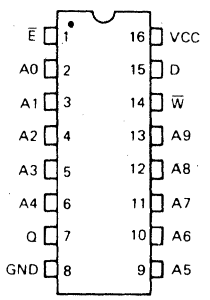
Ē 1
A0 2
A1 3
A2 4
A3 5
A4 6
Q 7
GND 8
16 VCC
15 D
14 W̄
13 A9
12 A8
11 A7
10 A6
9 A5

A – Address Input
Ē – Chip Enable
W̄ – Write Enable
D – Data Input
Q – Data Output

Description

The HS-6508RH is a 1024 by 1 static CMOS RAM fabricated using the HARRIS Programs Division radiation hardened self-aligned silicon gate technology. Synchronous circuit design techniques are employed to achieve high performance and low power operation.

On-chip latches are provided for addresses allowing efficient interfacing with microprocessor systems. The data output buffers can be forced to a high impedance state for use in expanded memory arrays.

The HS-6508RH is a fully static RAM and may be maintained in any state for an indefinite period of time.

Logic Symbol

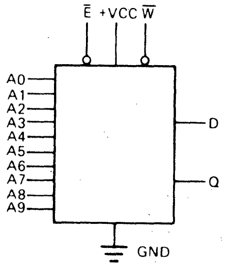
Ē
+VCC
W̄
A0
A1
A2
A3
A4
A5
A6
A7
A8
A9
D
Q
GND

Functional Diagram

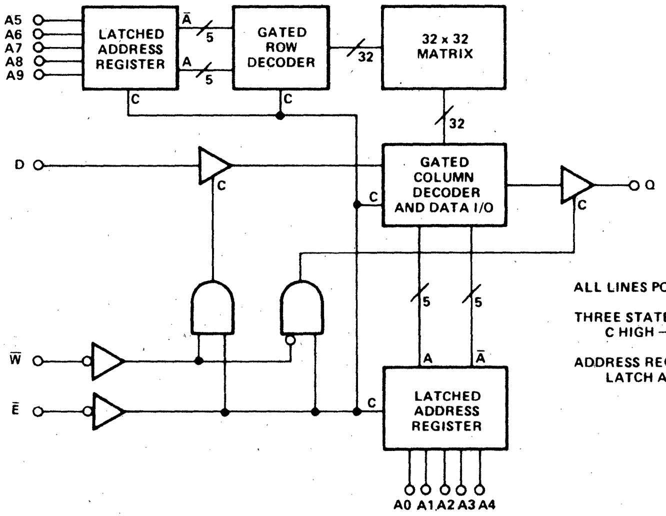
A5
A6
A7
A8
A9
LATCHED ADDRESS REGISTER
C
Ā
5
A
5
GATED ROW DECODER
C
32
32 x 32 MATRIX
32
D
C
GATED COLUMN DECODER AND DATA I/O
C
Q
C
5
5
A
Ā
W̄
Ē
C
LATCHED ADDRESS REGISTER
A0 A1 A2 A3 A4

ALL LINES POSITIVE LOGIC – ACTIVE HIGH

THREE STATE BUFFERS:
C HIGH → OUTPUT ACTIVE

ADDRESS REGISTER AND DECODERS:
LATCH AND GATE ON RISING EDGE OF C

Copyright © Harris Corporation 1980

ABSOLUTE MAXIMUM RATINGS

Supply Voltage -VCC	7.0V
Input or Output Voltage Applied	GND -0.3V to VCC +0.3V
Storage Temperature	-65°C to +150°C

OPERATING RANGE

Operating Supply Voltage -VCC	4.5V to 5.5V
Operating Temperature	-55°C to +125°C

CAUTION: To prevent permanent damage to this device, care should be exercised to insure that the absolute maximum ratings for supply voltages, temperature and voltage or current at any pin is not exceeded during both static and dynamic operation.

ELECTRICAL CHARACTERISTICS ⑤

	SYMBOL	PARAMETER	TEMP. & VCC = OPERATING RANGE		TEMP. = 25°C ① VCC = 5.0V			UNITS	TEST CONDITIONS
			MIN	MAX	MIN	TYP	MAX		
D.C.	ICCSB	Standby Supply Current		100		10	100	µA	IO = 0 VI = VCC or GND
	ICCOP	Operating Supply Current ②		4		1.5	2.5	mA	f = 1MHz, IO = 0 VI = VCC or GND
	II	Input Leakage Current	-1.0	+1.0	-0.5	0.0	+0.5	µA	GND ≤ VI ≤ VCC
	IOZ	Output Leakage Current	-1.0	+1.0	-0.5	0.0	+0.5	µA	GND ≤ VI ≤ VCC
	VIL	Input Low Voltage	-0.3	0.8	-0.3		1.5	V	
	VIH	Input High Voltage	VCC -2.0	VCC +0.3	2.5		5.3	V	
	VOL	Output Low Voltage		0.4		0.2	0.35	V	IOL = 3.2mA
	VOH	Output High Voltage	2.4		3.0	4.5		V	IOH = -3mA
	CI	Input Capacitance ③		6		4	6	pF	VI = VCC or GND f = 1MHz
	CO	Output Capacitance ③		10		6	10	pF	VO = VCC or GND f = 1MHz
A.C.	TELQV	Chip Enable Access Time		300		160	250	ns	④
	TAVQV	Address Access Time		310		160	260	ns	④
	TELQX	Chip Enable Output Enable Time		200		60	170	ns	④
	TWLQZ	Write Enable Output Disable Time		200		60	170	ns	④
	TEHQZ	Chip Enable Output Disable Time		200		60	170	ns	④
	TELEH	Chip Enable Pulse Negative Width	300		250	160		ns	④
	TEHEL	Chip Enable Pulse Positive Width	150		130	90		ns	④
	TAVEL	Address Setup Time	10		10	0		ns	④
	TELAX	Address Hold Time	70		50	40		ns	④
	TDVWH	Data Setup Time	130		100	80		ns	④
	TWHDX	Data Hold Time	0		0	0		ns	④
	TWLEH	Chip Enable Write Pulse Setup Time	160		130	100		ns	④
	TELWH	Chip Enable Write Pulse Hold Time	160		130	100		ns	④
	TWLWH	Write Enable Pulse Width	160		130	100		ns	④
	TELEL	Read or Write Cycle Time	450		380	250		ns	④

NOTES:
1. All devices guaranteed at worst case limits. Room temp., 5 volt data provided for information and not guaranteed.
2. Operating Supply Current (ICCOP) is proportional to Operating Frequency. Example: Typical ICCOP = 1.5mA/MHz.
3. Capacitance sampled and guaranteed — not 100% tested.
4. AC Test Conditions: Inputs — TRISE = TFALL = 20nsec; Outputs — 1 TTL load and 50pF. All timing measurements at 1/2 VCC.
5. Pre-Radiation characteristics. See Radiation effects section for Post-Radiation characteristics.

HARRIS

HS-6514RH

Radiation Hardened
1024 × 4 CMOS RAM

October 1985

Features

• LOW POWER STANDBY	1050 µW MAX.
• LOW POWER OPERATION	36.75mW/MHz MAX.
• TOTAL DOSE	1 X 10^5 RAD Si
• DATA UPSET	$>10^8$ RADS Si/SEC.
• LATCH-UP FREE TO	$> 2 \times 10^{12}$ RAD Si/SEC.
• SINGLE EVENT UPSET IMMUNE OPTION	
• TTL COMPATABLE INPUT/OUTPUT	
• COMMON DATA I/O	
• THREE-STATE OUTPUTS	
• STANDARD JEDEC PINOUT	
• FAST ACCESS TIME	150ns TYP.
• MILITARY TEMPERATURE RANGE	
• 18 PIN PACKAGE FOR HIGH DENSITY	
• ON-CHIP ADDRESS REGISTER	

Description

The HS-6514RH is a synchronous 1024 x 4 static CMOS RAM fabricated using the Harris Custom Integrated Circuits Division radiation hardened guard banded, self-aligned silicon gate technology. The device utilizes synchronous circuitry to achieve high performance and low power operation.

Latch-up free operation is achieved by the use of epitaxial starting material to eliminate the parasitic SCR effect seen in conventional bulk CMOS devices. On-chip latches are provided for the addresses allowing efficient interfacing with microprocessor systems. The data output can be forced to a high impedance state for use in expanded memory systems.

The HS-6514RH is a fully static RAM and may be maintained in any state for an indefinite period of time.

Pinout

TOP VIEW

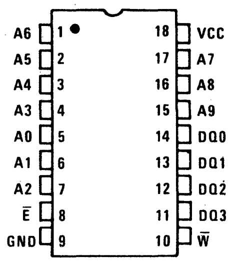
A6 1
A5 2
A4 3
A3 4
A0 5
A1 6
A2 7
Ē 8
GND 9
18 VCC
17 A7
16 A8
15 A9
14 DQ0
13 DQ1
12 DQ2
11 DQ3
10 W̄

TOP VIEW

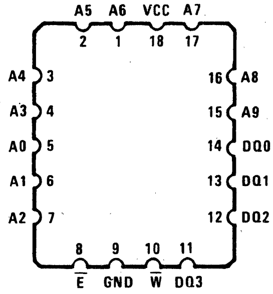
A5 A6 VCC A7
2 1 18 17
A4 3
A3 4
A0 5
A1 6
A2 7
16 A8
15 A9
14 DQ0
13 DQ1
12 DQ2
8 9 10 11
Ē GND W̄ DQ3

A – Address Input
Ē – Chip Enable
W̄ – Write Enable
DQ – Data In/Out

Functional Diagram

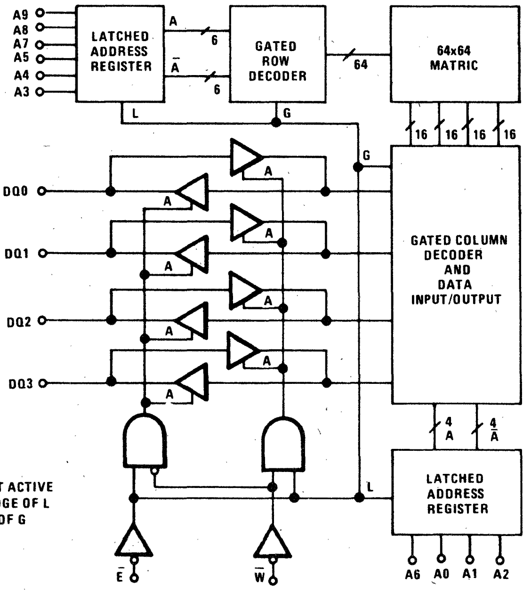
A9
A8
A7
A5
A4
A3
LATCHED ADDRESS REGISTER
A
Ā
6
6
L
GATED ROW DECODER
G
64
64x64 MATRIC
16
16
16
16
G
GATED COLUMN DECODER AND DATA INPUT/OUTPUT
DQ0
DQ1
DQ2
DQ3
A
4
A
4
Ā
L
LATCHED ADDRESS REGISTER
A6
A0
A1
A2
Ē
W̄

ALL LINES ACTIVE HIGH - POSITIVE LOGIC
THREE STATE BUFFERS: A HIGH⟶OUTPUT ACTIVE
ADDRESS REGISTERS: LATCH ON RISING EDGE OF L
GATED DECODERS: GATE ON RISING EDGE OF G

Copyright © Harris Corporation 1985

Specifications: HS-6514RH

ABSOLUTE MAXIMUM RATINGS	
Supply Voltage -(VCC-GND)	-0.3 to +7.0V
Input or Output Voltage Applied	GND -0.3V to VCC +0.3V
Storage Temperature	-65°C to +150°C

OPERATING RANGE	
Operating Supply Voltage	4.75V to 5.25V
Operating Temperature	
Standard RAM	-55°C to +125°C
S.E.U. Immune RAM	-20°C to +80°C

CAUTION: *As with all semiconductors, stresses listed under "Absolute Maximum Ratings" may be applied to devices (one at a time) without resulting in permanent damage. This is a stress rating only. Exposure to absolute maximum rating conditions for extended periods may affect device reliability. The conditions listed under "Electrical Characteristics" are the only conditions recommended for satisfactory operation.*

ELECTRICAL CHARACTERISTICS⑤⑥

			TEMP & V_{CC} = OPERATING RANGE		TEMP = 25°C① V_{CC} = 5.0V TYPICAL			
	SYMBOL	**PARAMETER**	**MIN**	**MAX**	**PRE-RAD**	**POST 100K RADS**	**UNITS**	**TEST CONDITIONS**
DC	ICCSB	Standby Supply Current		200	6	6	µA	IO = 0 VI = GND or VCC
	ICCOP	Operating Supply Current ②		7	4		mA	f = 1MHz, IO = 0 VI = VCC or GND
	ICCDR	Data Retention Current		100	4	4	µA	
	VCCDR	Data Retention Voltage ⑦		3.0	2.6	1.8	V	
	II	Input Leakage Current	-1.0	+1.0	0.0		µA	GND≤VI≤ VCC
	IIOZ	Input/Output Leakage Current	-10	+10	±0.2	±0.2	µA	GND≤VO≤ VCC
	VIL	Input Low Voltage	-0.3	0.8	1.3	1.1	V	
	VIH	Input High Voltage	V_{CC} -2.0	V_{CC} +0.3	2.5	2.2	V	
	VOL	Output Low Voltage		0.4	0.2	0.15	V	IOL = 2.0mA
	VOH	Output High Voltage	2.4		4.7	4.1	V	IOH = -1.0mA
	CI	Input Capacitance ③		8.0	5.0	5.0	pF	VI = VCC or GND
	CIO	Input/Output Capacitance ③		10.0	6.0	6.0	pF	VO = VCC or GND f = 1MHz
AC	TELQV	Chip Enable Access Time		225	150	120	ns	④
	TAVQV	Address Access Time		235	150	120	ns	④
	TELQX	Chip Enable/Output Enable Time		75	50	40	ns	④
	TWLQZ	Write Enable/Output Disable		75	50	40	ns	④
	TEHQZ	Chip Enable/Output Disable		75	50	40	ns	④
	TELEH	Chip Enable Time	225		150	170	ns	④
	TEHEL	Chip Disable Time	105		40	50	ns	④
	TAVEL	Address Set-up Time	10		-10	0	ns	④
	TELAX	Address Hold Time	50		30	40	ns	④
	TWLWH	Write Enable Pulse Width	225		150	170	ns	④
	TWLEH	Write Enable Set-up Time	225		150	170	ns	④
	TELWH	Write Enable Hold Time	225		150	170	ns	④
	TDVWH	Data Set-up Time	190		140	160	ns	④
	TWHDZ	Data Hold Time	50		10	20	ns	④
	TWLEL	Early Output High-Z Time	0		-20	-10	ns	④
	TEHWH	Late Output High-Z Time	0		-20	-10	ns	④
	TELEL	Read or Write Cycle Time	330		190	220	ns	④

NOTES:
1. All devices guaranteed at worst case limits. Room temp., 5 volt data provided for information but not guaranteed. Post Rad Data at TD = 1 x 105
2. Operating Supply Current (ICCOP) is proportional to Operating Frequency.
3. Capacitance sampled and guaranteed — not 100% tested.
4. AC test Conditions: Inputs: T_{RISE} = T_{FALL}≤20nsec; Outputs: 1 TTL Load and 50pF. All timing measurements at ½ VCC.
5. Pre-Radiation and Post-Radiation limits.
6. Devices screened to more rigorous electrical specifications are available. Contact factory for details.
7. Single event upset immunity is guaranteed over the operating votlage of 5V ±5%.

HARRIS

HS-6564RH

Radiation Resistant 8K x 8, 16K x 4 CMOS RAM

Preliminary

Features

LOW POWER STANDBY	500μW MAX
LOW POWER OPERATION	180mW/MHz MAX
DATA RETENTION	3.0 V MIN
TTL COMPATIBLE IN/OUT	
THREE STATE OUTPUTS	
FAST ACCESS TIME	250 nsec TYP.
MILITARY TEMPERATURE RANGE	-55°C TO +125°C
ON CHIP ADDRESS REGISTERS	
ORGANIZABLE 8K×8 OR 16K×4	
40 PIN DIP PINOUT 2.000″ × 0.900″	
FUNCTIONAL TOTAL DOSE	1×10^5 RAD Si
DATA UPSET	$>10^8$ RAD Si/SEC
LATCH-UP FREE TO	$>5\times10^{11}$ RAD Si/SEC

Description

The HS-6564RH is a radiation resistant 64K bit, synchronous CMOS RAM. It consists of 16 HS-6504RH 4K×1 radiation resistant CMOS RAMs, in leadless carriers, mounted on a ceramic substrate. The HS-6564RH is configured as an extra wide, standard length 40 pin DIP. The memory appears to the system as an array of 16 4K×1 static RAMs. The array is organized as two 8K by 4 blocks of RAM sharing only the address bus. The data inputs, data outputs, chip enables and write enables are separate for each block of RAM. This allows the user to organize the HS-6564RH RAM as either an 8K by 8 or a 16K by 4 array.

This 64K memory provides a unique blend of low power CMOS semiconductor technology and advanced packaging techniques. The HS-6564RH is intended for use in radiation environments where a large amount of RAM is needed, and where power consumption and board space are prime concerns. On-chip latches are provided for addresses, data input and data output allowing efficient interfacing with microprocessor systems. The data output can be forced to a high impedance for use in expanded memory arrays. The guaranteed low voltage data retention characteristics allow easy implementation of non-volatile read/write memory by using very small batteries mounted directly on the memory circuit board.

Pinout

TOP VIEW

Signal	Pin	Pin	Signal
*GND	1	40	VCC*
Q4	2	39	Q0
D4	3	38	D0
Q5	4	37	Q1
D5	5	36	D1
A0	6	35	A6
A1	7	34	A7
A4	8	33	A8
$\overline{\text{E}}$3	9	32	$\overline{\text{E}}$1
*$\overline{\text{W}}$2	10	31	$\overline{\text{W}}$1
$\overline{\text{W}}$2	11	30	$\overline{\text{W}}$1*
$\overline{\text{E}}$4	12	29	$\overline{\text{E}}$2
A11	13	28	A3
A10	14	27	A2
A9	15	26	A5
D6	16	25	D2
Q6	17	24	Q2
D7	18	23	D3
Q7	19	22	Q3
*VCC	20	21	GND*

***NOTES:**

Pins 20 and 40 (VCC) are internally connected. Similarly pins 1 and 21 (Ground) are connected. The user is advised to connect all four VCC pins and Ground pins to his board busses. This will improve power distribution across the array and will enhance decoupling.

Pin 10 is internally connected to pin 11, and pin 30 is connected to pin 31. For those users wishing to preserve board compatibility with possible future RAM arrays, we recommend connections to the write lines be made at pins 11 and 31, leaving pins 10 and 30 free for future expansion.

Functional Diagram

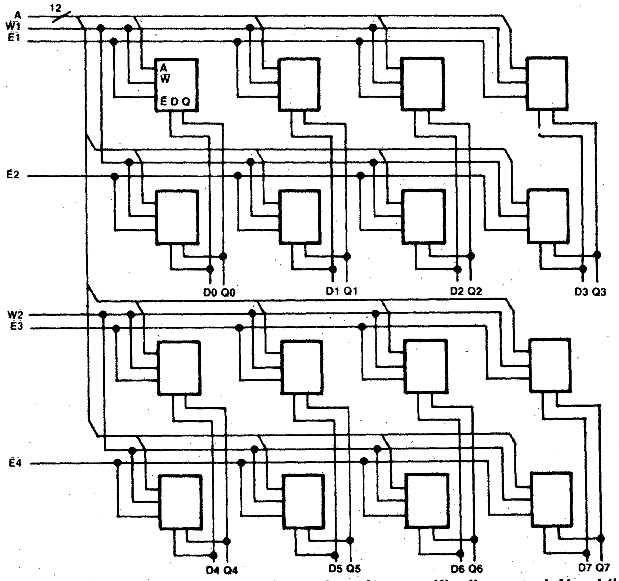

Information on this device is preliminary. Data is subject to change unless otherwise specifically agreed. No obligations are assumed for notice of change or future manufacture of this device.

CAUTION: These devices are sensitive to electronic discharge. Proper I.C. handling procedures should be followed.

Copyright © Harris Corporation 1982.

ABSOLUTE MAXIMUM RATINGS*

Supply Voltage – (VCC – GND)	−0.3V to +7.0V
Input or Output Voltage Applied	(GND −0.3V) to (VCC +0.3V)
Storage Temperature	−65°C to +150°C

OPERATING RANGE

Operating Supply Voltage	+4.5 to +5.5V
Operating Temperature	−55°C to +125°C

* *CAUTION: Stresses above those listed under "Absolute Maximum Ratings" may cause permanent damage to the device. This is a stress only rating and functional operation of the device at these or at any other conditions above those indicated in the operational sections of this specification is not implied.*

ELECTRICAL CHARACTERISTICS ④

D.C.

SYMBOL	PARAMETER	TEMP. & VCC = OPERATING RANGE		TYPICAL TEMP. = 25°C ① VCC = 5.0V		UNITS	TEST CONDITIONS
		MIN	MAX	PRE RAD	POST RAD		
ICCSB	Standby Supply Current		800	80	80	μA	IO = 0 VI = VCC or GND
ICCOP1	Operating Supply Current (8K × 8) ②		56	36		mA	f = 1MHz, IO = 0 VI = VCC or GND
ICCOP2	Operating Supply Current (16K × 4) ②		28	18		mA	f = 1MHz, IO = 0 VI = VCC or GND
ICCDR	Data Retention Supply Current		600	48	48	μA	IO = 0, VCC = 3.0 VI = VCC or GND
VCCDR	Data Retention Supply Voltage	3.0		2.6	1.8	V	
IIA	Address Input Leakage	−20	+20			μA	GND≤VI≤VCC
IID1	Data Input Leakage (8K × 8)	−3	+3			μA	GND≤VI≤VCC
IID2	Data Input Leakage (16K × 4)	−5	+5			μA	GND≤VI≤VCC
IIE1	Enable Input Leakage (8K × 8)	−10	+10			μA	GND≤VI≤VCC
IIE2	Enable Input Leakage (16K × 4)	−5	+5			μA	GND≤VI≤VCC
IIW	Write Enable Input Leakage (Each)	−10	+10			μA	GND≤VI≤VCC
IOZ1	Output Leakage (8K × 8)	−20	+20	±4	±4	μA	GND≤VO≤VCC
IOZ2	Output Leakage (16K × 4)	−40	+40	±8	±8	μA	GND≤VO≤VCC
VIL	Input Low Voltage	−0.3	0.8	1.5	1.3	V	
VIH1	Input High Level (Except $\overline{E}$ and $\overline{W}$)	VCC −1.5	VCC +0.3	2.7	2.5	V	
VIH2	Input High Level ($\overline{E}$ and $\overline{W}$)	VCC −1.0	VCC +0.3	2.9	2.1	V	
VOL	Output Low Voltage		0.4	0.2	0.15	V	IO = 2.0mA
VOH	Output High Voltage	2.4		4.6	4.0	V	IO = −1.0mA
CIA	Address Input Capacitance ③		200			pF	f = 1MHz, VI = VCC or GND
CID1	Data Input Capacitance (8K × 8) ③		50			pF	f = 1MHz, VI = VCC or GND
CID2	Data Input Capacitance (16K × 4) ③		100			pF	f = 1MHz, VI = VCC or GND
CIE1	Enable Input Capacitance (8K × 8) ③		160			pF	f = 1MHz, VI = VCC or GND
CIE2	Enable Input Capacitance (16K × 4) ③		80			pF	f = 1MHz, VI = VCC or GND
CIW	Write Enable Input Capacitance (Each) ③		100			pF	f = 1MHz, VI = VCC or GND
CO1	Output Capacitance (8K × 8) ③		50			pF	f = 1MHz, VO = VCC or GND
CO2	Output Capacitance (16K × 4) ③		100			pF	f = 1MHz, VO = VCC or GND

NOTES:

① Each individual RAM in the leadless carrier is fully tested at worst case limits of temperature and voltage. The complete assembled HS-6564RH array is tested at room temperature only. The worst case parameters are guaranteed over the specified temperature and voltage ranges. Room temperature, 5 volt data is provided for information purposes and is not guaranteed.

② Operating supply current is proportional to operating frequency. ICCOP is specified at an operating frequency of 1MHz, indicating repetive accessing at a 1μs rate. Operation at slower rates will decrease ICCOP proportionally.

③ Capacitance sampled and guaranteed – not 100% tested.

④ Pre Radiation and Post Radiation limits.

ELECTRICAL CHARACTERISTICS

	SYMBOL	PARAMETER	TEMP. & VCC = OPERATING RANGE MIN	TEMP. & VCC = OPERATING RANGE MAX	TYPICAL TEMP. = 25°C VCC = 5.0V PRE RAD	TYPICAL TEMP. = 25°C VCC = 5.0V POST RAD	UNITS	TEST CONDITIONS
A.C.	TELQV	Chip Enable Access		350	200	230	ns	⑤
	TAVQV	Address Access (TAVQV=TELQV+TAVEL)		400	220	260	ns	
	TELQX	Output Enable	20	120	70	80	ns	
	TEHQZ	Output Disable		130	80	90	ns	
	TELEL	Read or Write Cycle	480		250	320	ns	
	TELEH	Chip Enable Low	350		200	230	ns	
	TEHEL	Chip Enable High	130		50	90	ns	
	TAVEL	Address Setup	50		20	30	ns	
	TELAX	Address Hold	50		30	35	ns	
	TWLWH	Write Enable Low	150		90	100	ns	
	TWLEH	Write Enable Setup	250		190	190	ns	
	TWLEL	Early Write Setup (Write Mode)	10		−5	0	ns	
	TWHEL	Write Enable Read Setup	10		−5	0	ns	
	TELWX	Early Write Hold (Write Mode)	100				ns	
	TDVWL	Data Setup	10		−5	20	ns	
	TDVEL	Early Write Data Setup	10		−5	20	ns	
	TWLDX	Data Hold	100		70	80	ns	
	TELDX	Early Write Data Hold	100		70	80	ns	
	TQVWL	Data Valid to Write (Read-Modify-Write)	0		0	0	ns	⑤

NOTES:

⑤ AC Test Conditions:
Inputs – Trise = Tfall ≤ 20ns.
Outputs – CLOAD = 100pF.
Timing measured at 1.5V reference level.

Read Cycle

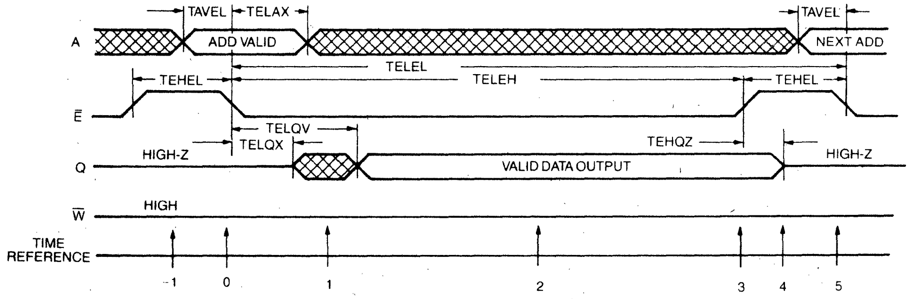

TRUTH TABLE

TIME REFERENCE	INPUTS E̅	INPUTS W̅	INPUTS A	OUTPUT Q	FUNCTION
−1	H	X	X	Z	MEMORY DISABLED
0	↘	H	V	Z	CYCLE BEGINS, ADDRESSES ARE LATCHED
1	L	H	X	X	OUTPUT ENABLED
2	L	H	X	V	OUTPUT VALID
3	↗	H	X	V	READ ACCOMPLISHED
4	H	X	X	Z	PREPARE FOR NEXT CYCLE (SAME AS −1)
5	↘	H	V	Z	CYCLE ENDS, NEXT CYCLE BEGINS (SAME AS 0)

The address information is latched in the on chip registers on the falling edge of E̅ (T = 0). Minimum address set up and hold time requirements must be met. After the required hold time, the addresses may change state without affecting device operation. During time (T = 1) the output becomes enabled but data is not valid until during time (T = 2). W̅ must remain high until after time (T = 2). After the output data has been read, E̅ may return high (T = 3). This will disable the output buffer and ready the RAM for the next memory cycle (T = 4).

Early Write Cycle

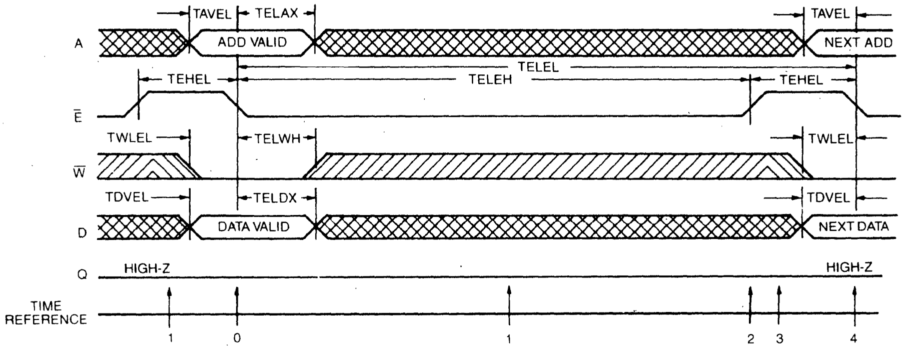
TAVEL
TELAX
TAVEL
A
ADD VALID
NEXT ADD
TELEL
TEHEL
TELEH
TEHEL
$\overline{E}$
TWLEL
TELWH
TWLEL
$\overline{W}$
TDVEL
TELDX
TDVEL
D
DATA VALID
NEXT DATA
Q
HIGH-Z
HIGH-Z
TIME REFERENCE
1
0
1
2
3
4

TRUTH TABLE

TIME REFERENCE	INPUTS				OUTPUT	FUNCTION
	$\overline{E}$	$\overline{W}$	A	D	Q	
-1	H	X	X	X	Z	MEMORY DISABLED
0	↘	L	V	V	Z	CYCLE BEGINS, ADDRESSES ARE LATCHED
1	L	X	X	X	Z	WRITE IN PROGRESS INTERNALLY
2	↗	X	X	X	Z	WRITE COMPLETED
3	H	X	X	X	Z	PREPARE FOR NEXT CYCLE (SAME AS −1)
4	↘	L	V	V	Z	CYCLE ENDS, NEXT CYCLE BEGINS (SAME AS 0)

The early write cycle is the only cycle where the output is guaranteed not to become active. On the falling edge of $\overline{E}$ (T = 0), the addresses, the write signal, and the data input are latched in on chip registers. The logic value of $\overline{W}$ at the time $\overline{E}$ falls determines the state of the output buffer for that cycle. Since $\overline{W}$ is low when $\overline{E}$ falls, the output buffer is latched into the high impedance state and will remain in that state until $\overline{E}$ returns high (T = 2). For this cycle, the data input is latched by $\overline{E}$ going low; therefore data set up and hold times should be referenced to $\overline{E}$. When $\overline{E}$ (T = 2) returns to the high state, the output buffer disables and all signals are unlatched. The device is now ready for the next cycle.

Read Modify Write Cycle

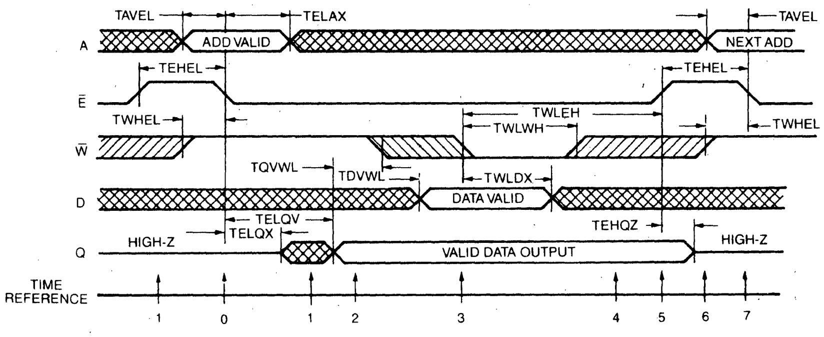
TAVEL
TELAX
TAVEL
A
ADD VALID
NEXT ADD
TEHEL
TEHEL
$\overline{E}$
TWHEL
TWLEH
TWLWH
TWHEL
$\overline{W}$
TQVWL
TDVWL
TWLDX
D
DATA VALID
TELQV
TELQX
TEHQZ
HIGH-Z
HIGH-Z
Q
VALID DATA OUTPUT
TIME REFERENCE
1
0
1
2
3
4
5
6
7

TRUTH TABLE

TIME REFERENCE	INPUTS				OUTPUT	FUNCTION
	$\overline{E}$	$\overline{W}$	A	D	Q	
−1	H	X	X	X	Z	MEMORY DISABLED
0	↘	H	V	X	Z	CYCLE BEGINS, ADDRESSES ARE LATCHED
1	L	H	X	X	X	OUTPUT ENABLED
2	L	H	X	X	V	OUTPUT VALID, READ AND MODIFY TIME
3	L	↘	X	V	V	WRITE BEGINS, DATA IS LATCHED
4	L	X	X	X	V	WRITE IN PROGRESS INTERNALLY
5	↗	X	X	X	V	WRITE COMPLETED
6	H	X	X	X	Z	PREPARE FOR NEXT CYCLE (SAME AS −1)
7	↘	H	V	X	Z	CYCLE ENDS, NEXT CYCLE BEGINS (SAME AS 0)

The read modify write cycle begins as all other cycles on the falling edge of $\overline{E}$ (T = 0). The $\overline{W}$ line should be high at (T = 0) in order to latch the output buffers in the active state. During (T = 1) the output will be active but not valid until (T = 2). On the falling edge of the $\overline{W}$ (T = 3) the data present at the output and input are latched. The $\overline{W}$ signal also latches itself on its low going edge. All input signals excluding $\overline{E}$ have been latched and have no further effect on the RAM. The rising edge of $\overline{E}$ (T = 5) completes the write portion of the cycle and unlatches all inputs and output. The output goes to a high impedance and the RAM is ready for the next cycle.

NOTES: In the above descriptions the numbers in parenthesis (T = n) refer to the respective timing diagrams. The numbers are located on the time reference line below each diagram. The timing diagrams shown are only examples and are not the only valid method of operation.

Board Size Tradeoffs

Printed circuit board real estate is a costly commodity. Actual board costs depend on layout tolerances, density, complexity, number of layers, choice of board material, and other factors.

The following table compares board space for 16 standard DIP 4K RAMs to the HS-6564RH RAM array. Both fine line, close tolerance layout and standard "easy" layout board sizes are shown in the comparison.

64K ARRAY OF 16 4K RAMs ON A PC BOARD V.S. THE HS-6564RH

PACKAGE	CIRCUIT SUBSTRATE	SIZE
18 Pin DIP	Standard Two Sided PCB	12 to 15 sq. in.
18 Pin DIP	Fine Line or Multilayer PCB	9 to 11 sq. in.
18 Pin Leadless Carrier	Multilayer Alumina Substrate	3 to 5 sq. in.
HS-6564RH	Two Sided Mounting Multilayer Alumina Substrate	2 sq. in.

The cost of semiconductor circuits decline with time. If actual costs were included, they would be out of date in a very short time. We urge you to contact your local Harris office or sales representative for accurate pricing allowing cost tradeoff analysis. In your cost analysis, also consider the advantages of a lighter, smaller overall package for your system. Consider how much more valuable your system will be when the memory array size is decreased to about 1/6 of normal size.

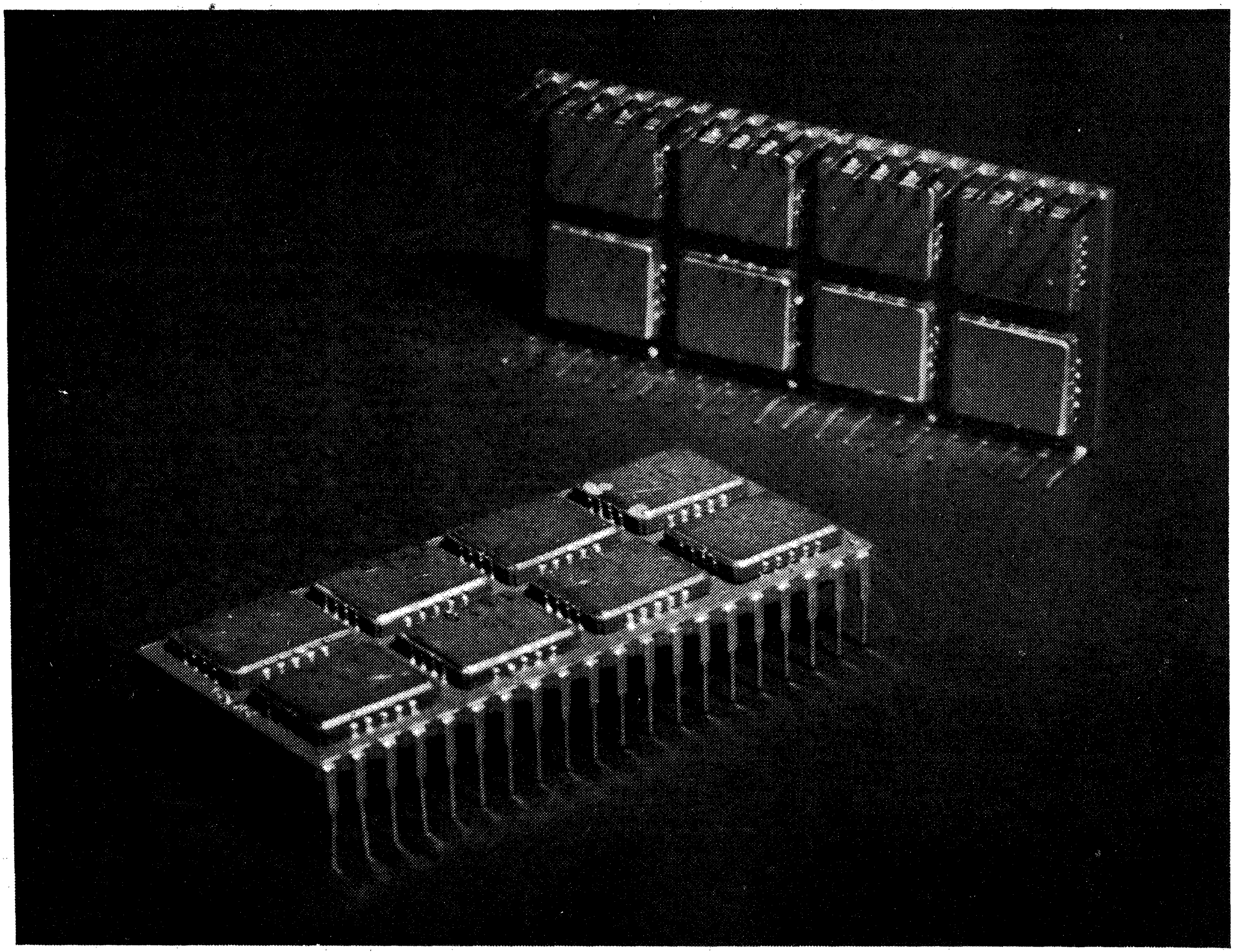

HS-6564RH – 64K BIT CMOS RAM

HARRIS

HS-6551RH

256 x 4 CMOS RAM

Features

FUNCTIONAL TOTAL DOSE	2 x 10^4 RAD Si
LATCH-UP FREE TO	5.0 x 10^{11} RAD Si/sec
LOW STANDBY POWER	550µW MAX
LOW OPERATING POWER	25mW/MHz MAX
FAST ACCESS TIME	300ns MAX
TTL COMPATIBLE IN/OUT	
HIGH OUTPUT DRIVE - 1TTL LOAD	
HIGH NOISE IMMUNITY	
ON CHIP ADDRESS REGISTER	
MILITARY TEMPERATURE RANGE	
THREE-STATE OUTPUTS	
22 PIN PACKAGE FOR HIGH DENSITY	

Description

The HS-6551RH is a 256 by 4 static CMOS RAM fabricated using the Harris Programs Division radiation hardened self-aligned silicon gate technology. Synchronous circuit design techniques are employed to achieve high performance and low power operation.

On-chip latches are provided for addresses, allowing efficient interfacing with microprocessor systems. The data output buffers can be forced to a high impedance state for use in expanded memory arrays.

The HS-6551RH is a fully static RAM and may be maintained in any state for an indefinite period of time.

Pinout

TOP VIEW

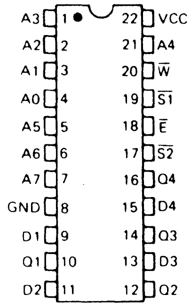
A3 1
A2 2
A1 3
A0 4
A5 5
A6 6
A7 7
GND 8
D1 9
Q1 10
D2 11
22 VCC
21 A4
20 W̄
19 S̄1
18 Ē
17 S̄2
16 Q4
15 D4
14 Q3
13 D3
12 Q2

A – Address Input
Ē – Chip Enable
S̄ – Chip Select
W̄ – Write Enable
D – Data Input
Q – Data Output

Logic Symbol

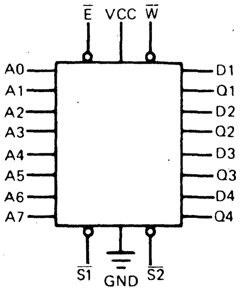
Ē
VCC
W̄
A0
A1
A2
A3
A4
A5
A6
A7
D1
Q1
D2
Q2
D3
Q3
D4
Q4
S̄1
GND
S̄2

Functional Diagram

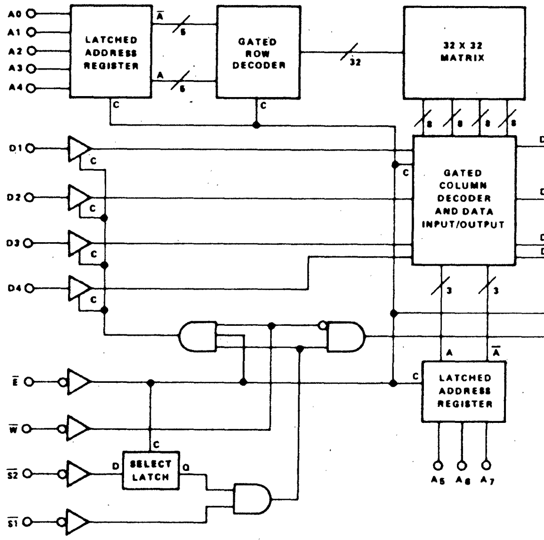
A0
A1
A2
A3
A4
LATCHED ADDRESS REGISTER
Ā
5
A
5
GATED ROW DECODER
32
32 X 32 MATRIX
C
C
8
8
8
8
D1
D2
D3
D4
C
GATED COLUMN DECODER AND DATA INPUT/OUTPUT
D
DATA OUTPUT LATCHES
Q
Q1
Q2
Q3
Q4
3
3
A
Ā
LATCHED ADDRESS REGISTER
A5
A6
A7
Ē
W̄
S̄2
S̄1
SELECT LATCH
D
Q

ALL LINES POSITIVE LOGIC – ACTIVE HIGH

THREE STATE BUFFERS:
C HIGH ⟶ OUTPUT ACTIVE

DATA LATCHES:
C HIGH ⟶ Q=D
Q LATCHES ON FALLING EDGE OF C

SELECT LATCH:
C LOW ⟶ Q=D
Q LATCHES ON RISING EDGE OF C

ADDRESS LATCHES AND DECODERS
LATCH AND GATE ON RISING EDGE OF C

Copyright © Harris Corporation 1980

ABSOLUTE MAXIMUM RATINGS

Supply Voltage -VCC	+7V
Applied Input or Output Voltage	GND -0.3V VCC +0.3V
Storage Temperature	-65°C to +150°C

OPERATING RANGE

Operating Supply Voltage -VCC	4.5V to 5.5V
Operating Temperature	-55°C to +125°C

CAUTION: *To prevent permanent damage to this device, care should be exercised to insure that the absolute maximum ratings for supply voltages, temperature and voltage or current at any pin is not exceeded during both static and dynamic operation.*

ELECTRICAL CHARACTERISTICS ⑤

	SYMBOL	PARAMETER	TEMP. & VCC = OPERATING RANGE MIN	TEMP. & VCC = OPERATING RANGE MAX	TEMP. = 25°C ① VCC = 5.0V MIN	TYP	MAX	UNITS	TEST CONDITIONS
D.C.	ICCSB	Standby Supply Current		100		10	100	μA	IO = 0 VI = VCC or GND
	ICCOP	Operating Supply Current ②		4		1.5	2.5	mA	f = 1MHz, IO = 0 VI = VCC or GND
	II	Input Leakage Current	-1.0	+1.0	-0.5	0.0	+0.5	μA	GND ≤ VI ≤ VCC
	IOZ	Output Leakage Current	-1.0	+1.0	-0.5	0.0	+0.5	μA	GND ≤ VI ≤ VCC
	VIL	Input Low Voltage	-0.3	0.8	-0.3		1.5	V	
	VIH	Input High Voltage	VCC -2.0	VCC +0.3	2.5		5.3	V	
	VOL	Output Low Voltage		0.4		0.2	0.35	V	IOL = 2.0mA
	VOH	Output High Voltage	2.4		3.0	4.5		V	IOH = -1.0mA
	CI	Input Capacitance ③		6		4	6	pF	VI = VCC or GND f = 1MHz
	CO	Output Capacitance ③		10		6	10	pF	VI = VCC or GND f = 1MHz
A.C.	TELQV	Chip Enable Access Time		300		160	240	ns	④
	TAVQV	Address Access Time		300		150	240	ns	④
	TS1LQX	Chip Select 1 Output Enable Time		150		60	120	ns	④
	TWLQZ	Write Enable Output Disable Time		150		60	120	ns	④
	TS1HQZ	Chip Select 1 Output Disable Time		150		60	120	ns	④
	TELEH	Chip Enable Pulse Negative Width	300		240	160		ns	④
	TEHEL	Chip Enable Pulse Positive Width	150		70	50		ns	④
	TAVEL	Address Setup Time	15		0	-10		ns	④
	TS2LEL	Chip Select 2 Setup Time	15		0	-10		ns	④
	TELAX	Address Hold Time	70		50	40		ns	④
	TELS2X	Chip Select 2 Hold Time	70		50	40		ns	④
	TDVWH	Data Setup Time	150		120	100		ns	④
	TWHDX	Data Hold Time	0		0	0		ns	④
	TWLS1H	Chip Select 1 Write Pulse Setup Time	180		150	120		ns	④
	TWLEH	Chip Enable Write Pulse Setup Time	180		150	120		ns	④
	TS1LWH	Chip Select 1 Write Pulse Hold Time	180		150	120		ns	④
	TELWH	Chip Enable Write Pulse Hold Time	180		150	120		ns	④
	TWLWH	Write Enable Pulse Width	180		150	120		ns	④
	TELEL	Read or Write Cycle Time	450		270	170		ns	④

NOTES:
1. All devices tested at worst case limits. Room temp., 5 volt data provided for information – not guaranteed.
2. Operating Supply Current (ICCOP) is proportional to Operating Frequency. Example: Typical ICCOP = 1.5mA/MHz.
3. Capacitance sampled and guaranteed – not 100% tested.
4. AC Test Conditions: Inputs – TRISE = TFALL = 20nsec; Outputs – 1 TTL load and 50pF. All timing measurements at 1/2 VCC.
5. Pre-radiation characteristics, see radiation effects for Post-Radiation characteristics.

HARRIS

HS-65262RH

ADVANCE INFORMATION

October 1985

Radiation Hardened 16K x 1 CMOS RAM

Features

- Radiation Hardened EPI-CMOS
- Total Dose .... >2 x 10^5 Rad (Si)
- Transient Upset .... > 1 x 10^8 Rad (Si)/sec
- Latch-up Free .... > 2 x 10^{12} Rad (Si)/sec
- Single Event Upset Immune Option
- Electrically Equivalent to Sandia SA 3240
- Low Standby Current.................................... 200μA max
- Low Operating Current.......................... 6mA/MHz max
- Fast Access Time .... 100ns Typ.
- 16,384 x 1 Bit
- Single +5V Power Supply
- Asynchronous Operation
- CMOS or TTL Compatible Inputs
- Completely Static Operation
- Three-State Output
- -55°C to +125°C Operation
- Total Dose Capabilities above 2 x 10^5 Rad(Si) are available. Contact Factory for Details.

Description

The HS-65262RH was designed to be functionally compatible with the Harris HM-65262. It is an asynchronous 16,384 x 1 bit static CMOS RAM fabricated using the Harris Custom Integrated Circuits Division radiation hardened composite oxide, self-aligned junction isolated silicon gate technology. This technology completely eliminates the need for guard-bands. The device is designed to have a maximum access time of 150ns after exposure to 2 x 10^5 Rads (Si) over the full military temperature range. Latch-up free operation is achieved by the use of epitaxial starting material. In addition, the device has the option to be single event upset immune. Operation is designed for +5V. Contact factory for sample availability.

Functional Diagram

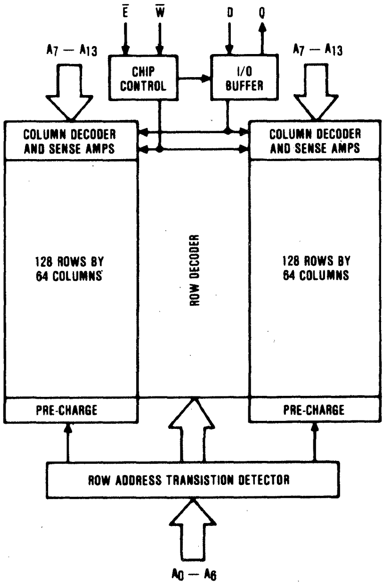
$\overline{E}$
$\overline{W}$
D
Q
A7 — A13
A7 — A13
CHIP CONTROL
I/O BUFFER
COLUMN DECODER AND SENSE AMPS
COLUMN DECODER AND SENSE AMPS
128 ROWS BY 64 COLUMNS
ROW DECODER
128 ROWS BY 64 COLUMNS
PRE-CHARGE
PRE-CHARGE
ROW ADDRESS TRANSISTION DETECTOR
A0 — A6

Pinout

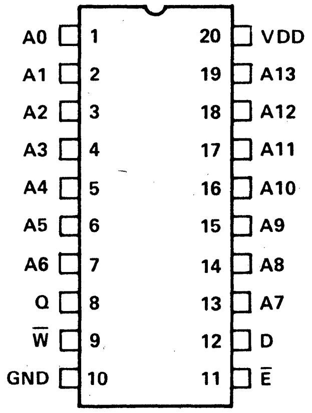
A0 1
A1 2
A2 3
A3 4
A4 5
A5 6
A6 7
Q 8
$\overline{W}$ 9
GND 10
20 VDD
19 A13
18 A12
17 A11
16 A10
15 A9
14 A8
13 A7
12 D
11 $\overline{E}$

CAUTION: These devices are sensitive to electronic discharge. Proper I. C. handling procedures should be followed.

Copyright © Harris Corporation 1985

Specifications HS-65262RH

Absolute Maximum Ratings*

Supply Voltage (VDD-GND)..................................-0.3 to 7.0V
Input or Output Voltage Applied ..GND -0.3V to VDD +0.3V
Storage Temperature ....-65°C to +150°C

Recommended Operating Conditions

Operating Supply Voltage.................... 4.75V to 5.25V
Operating Temperature.......................-55°C to +125°C

**CAUTION:* *Stresses above those listed under "Absolute Maximum Ratings" may cause permanent damage to the device. This is a stress only rating and functional operation of the device at these or any other conditions above those indicated in the operational sections of this specification is not implied.*

Electrical Characteristics (Note 1)

			CMOS INPUT		TTL INPUT			
	SYMBOL	PARAMETER	MIN	MAX	MIN	MAX	UNITS	TEST CONDITIONS
D.C.	IDDSB1	Standby Supply Current (CMOS)	--	200	--	--	μA	IO = 0, E = VDD -0.3V
	IDDSB	Standby Supply Current (TTL)	--	5	--	6	mA	IO = 0, E = VIH
	IDD	Enabled Supply Current	--	500	--	500	μA	IO = 0, E = VIL
	IDDOP	Operating Supply Current (Note 2)	--	7	--	7	mA	IO = 0, E = VIL, f = 1MHz
	II	Input Leakage Current	-1.0	+1.0	-1.0	+1.0	μA	VI = GND or VDD
	IOZ	Output Leakage Current	-10.0	+10.0	-10.0	+10.0	μA	VIO = GND or VDD
	VDDDR	Data Retention Supply Voltage	3.0	--	3.0	--	V	
	VOL	Output Low Voltage	--	0.4	--	0.4	V	IO = 5.0mA
	VOH	Output High Voltage	2.4	--	2.4	--	V	IO = -5.0mA
	VIL	Input Low Voltage	-0.3	0.8	-0.3	0.8	V	
	VIH	Input High Voltage	VDD -1.5	VDD +0.3	2.0	VDD +0.3	V	
	CI	Input Capacitance (Note 3)	--	8	--	8	pF	VI = VDD or GND, f = 1MHz
	CO	Output Capacitance (Note 3)	--	10	--	10	pF	VIO = VDD or GND, f = 1MHz
A.C. READ CYCLE	TAVAV	Read Cycle Time	150	--	175	--	ns	(Note 4)
	TAVQV	Address Access Time	--	150	--	175	ns	(Note 4)
	TELQV	Chip Enable Access Time	--	150	--	175	ns	(Note 4)
	TELQX	Chip Enable Output Enable Time	20	--	40	--	ns	(Note 3)
	TEHQX	Chip Disable Output Hold Time	20	--	40	--	ns	(Note 4)
	TAXQX	Address Invalid Output Hold Time	40	--	60	--	ns	(Note 4)
	TEHQZ	Chip Disable Output Disable Time	--	25	--	50	ns	(Note 3)
WRITE CYCLE	TAVAV	Write Cycle Time	150	--	175	--	ns	(Note 4)
	TELWH	Chip Enable to End of Write	100	--	125	--	ns	↓
	TWLWH	Write Enable Pulse Width	75	--	100	--	ns	↓
	TAVWL	Address Setup Time	0	--	0	--	ns	↓
	TWHAX	Address Hold Time	0	--	0	--	ns	↓
	TDVWH	Data Setup Time	75	--	100	--	ns	↓
	TWHDX	Data Hold Time	0	--	0	--	ns	↓
	TWLQZ	Write Enable Output Disable Time	--	25	--	50	ns	(Note 3)
	TWHQX	Write Disable Output Enable Time	0	--	0	--	ns	(Note 3)
	TAVWH	Address Valid to End of Write	100	--	125	--	ns	(Note 4)
	TAVEL	Address Setup Time	0	--	0	--	ns	↓
	TEHAX	Address Hold Time	0	--	0	--	ns	↓
	TAVEH	Address Valid to End of Write	100	--	125	--	ns	↓
	TELEH	Enable Pulse Width	100	--	125	--	ns	↓
	TWLEH	Write to End of Write	100	--	125	--	ns	↓
	TDVEH	Data Setup Time	75	--	100	--	ns	↓
	TEHDX	Data Hold Time	0	--	0	--	ns	↓

NOTES:
1. All devices tested at worst case temperature and supply voltage limits.
2. Typical derating = 5mA/MHz increase in IDDOP, VI = VDD or GND.
3. Tested at initial design and major design changes.
4. Input pulse levels: 0V to 3.0V.
   Input rise and fall times: 5ns max.
   Input and output timing reference levels: 1.5V.
   Output load: 1 TTL gate equivalent and 50pF (including scope and jig).
   Output load for output enable and disable times: 1 TTL gate equivalent and 5pF (Including scope and jig).

HARRIS

HS-6641RH

Radiation Hardened 512 x 8 CMOS PROM

October 1985 **Advance Information**

Features

- RADIATION HARDENED
- FIELD PROGRAMMABLE
- ELECTRICALLY EQUIVALENT TO HM-6641
- FUNCTIONAL TOTAL DOSE .... $1X10^5$ RAD(Si)
- LATCH-UP FREE .... > 1×10^{12} RAD(Si)/s
- LOW POWER STANDBY .... 500μW MAX
- LOW POWER OPERATION .... 50mW/MHz MAX
- FAST ACCESS TIME .... 250ns MAX
- POLYSILICON FUSE LINKS
- TTL COMPATIBLE IN/OUT
- POPULAR PINOUT LIKE BIPOLAR 7641
- THREE-STATE OUTPUTS
- ADDRESS LATCHES INCLUDED ON CHIP
- EASY MICROPROCESSOR INTERFACING
- -55°C TO +125°C OPERATION

Pinout

TOP VIEW

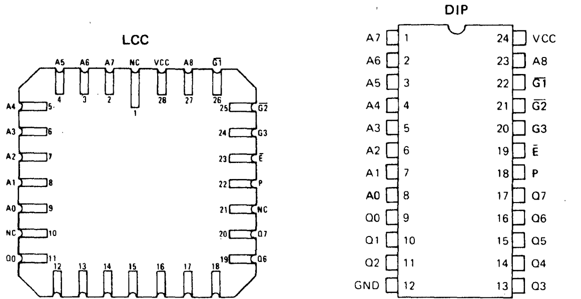
LCC
A5 4
A6 3
A7 2
NC 1
VCC 28
A8 27
$\overline{G1}$ 26
A4 5
A3 6
A2 7
A1 8
A0 9
NC 10
Q0 11
Q1 12
Q2 13
GND 14
NC 15
Q3 16
Q4 17
Q5 18
Q6 19
Q7 20
NC 21
P 22
$\overline{E}$ 23
G3 24
$\overline{G2}$ 25
DIP
A7 1
A6 2
A5 3
A4 4
A3 5
A2 6
A1 7
A0 8
Q0 9
Q1 10
Q2 11
GND 12
24 VCC
23 A8
22 $\overline{G1}$
21 $\overline{G2}$
20 G3
19 $\overline{E}$
18 P
17 Q7
16 Q6
15 Q5
14 Q4
13 Q3

PIN NAMES

A Address Input	$\overline{G}$ Output Enable
Q Data Output	P Program Enable
$\overline{E}$ Chip Enable	(P = GND except during Programming)
NC No Connect	

Description

The Harris HS-6641RH is a radiation hardened 4K CMOS PROM, organized in a 512 word by 8 bits/ word format. The chip is manufactured using a radiation hardened CMOS process, and is designed to be electrically equivalent to HM-6641. Synchronous circuit design techniques combine with CMOS processing to give this device high speed performance with very low power dissipation.

On chip address latches are provided, allowing easy interfacing with recent generation microprocessors that use multiplexed address/data bus structures, such as the HS-80C85RH. The output enable controls, both active low and active high, further simplify microprocessor system interfacing by allowing output data bus control independent of the chip enable control. The data output latches allow the use of the HS-6641RH in high speed pipelined architecture systems, and also in synchronous logic replacement functions.

Applications for the HS-6641RH CMOS PROM include low power microprocessor based instrumentation and communications systems, remote data acquisition and processing systems, processor control store, and synchronous logic replacement. Contact factory for sample availability.

Functional Diagram

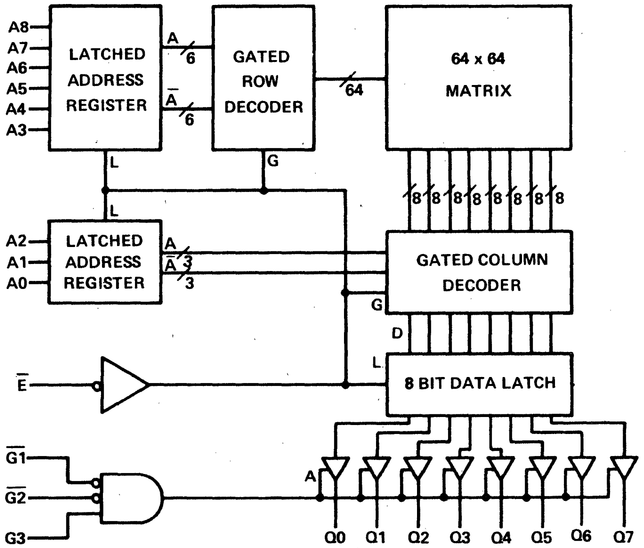
A8
A7
A6
A5
A4
A3
LATCHED ADDRESS REGISTER
A
6
$\overline{A}$
6
GATED ROW DECODER
64
64 x 64 MATRIX
L
G
8 8 8 8 8 8 8 8
L
A2
A1
A0
LATCHED ADDRESS REGISTER
A
$\overline{A}$
3
3
GATED COLUMN DECODER
G
D
L
8 BIT DATA LATCH
$\overline{E}$
$\overline{G1}$
$\overline{G2}$
G3
A
Q0
Q1
Q2
Q3
Q4
Q5
Q6
Q7

ALL LINES POSITIVE LOGIC - ACTIVE HIGH

THREE STATE BUFFERS:
A HIGH → OUTPUT ACTIVE

DATA LATCHES:
L HIGH → Q = D
Q LATCHES ON FALLING EDGE OF L

ADDRESS LATCHES AND GATED DECODERS:
LATCHES ON RISING EDGE OF L
GATE ON RISING EDGE OF G

CAUTION: These devices are sensitive to electronic discharge. Proper I.C. handling procedures should be followed.

Copyright © Harris Corporation 1984

ABSOLUTE MAXIMUM RATINGS

Supply Voltage -VDD	+7.0V
Input or Output Voltage Applied	GND -0.3V to VDD +0.3V
Storage Temperature	-65°C to +150°C

OPERATING RANGE

Operating Supply Voltage	4.5V to 5.5V
Operating Temperature	-55°C to +125°C

CAUTION: To prevent permanent damage to this device, care should be exercised to insure that the absolute maximum ratings for supply voltages, temperature and voltage or current at any pin is not exceeded during both static and dynamic operation.

ELECTRICAL CHARACTERISTICS (Notes 5, 6)

		TEMP & V_{DD} = OPERATING RANGE		TEMP = 25°C (1) V_{DD} = 5.0V TYPICAL			
SYMBOL	**PARAMETER**	**MIN**	**MAX**	**PRE-RAD**	**POST 100K RADS**	**UNITS**	**TEST CONDITIONS**
IDDSB	Standby Supply Current		100	10	20	μA	IO = 0 VI = GND or VDD
IDDOP	Operating Supply Current (2)		10	5	5	mA	f = 1MHz, IO = 0 VI = V_{DD} or GND
II	Input Leakage Current	-1.0	+1.0	0.0		μA	GND ≤ VI ≤ VDD
IOZ	Output Leakage Current	-1.0	+1.0	±0.5	±0.5	μA	GND ≤ VO ≤ VDD
VIL	Input Low Voltage	-0.3	0.8	2.0		V	
VIH	Input High Voltage	VDD-2.0	VDD +0.3	2.0	2.0	V	
VOL	Output Low Voltage		0.4	0.1	0.1	V	IOL = 3.2mA
VOH	Output High Voltage	2.4		4.25	4.25	V	IOH = -1.0mA
CI	Input Capacitance (3)		8.0	5.0	5.0	pF	VI = VDD or GND
CO	Output Capacitance (3)		10.0	8.0	8.0	pF	VO = VDD or GND f = 1MHz
TELQV	Chip Enable Access Time		250	150	150	ns	(Note 4)
TAVQV	(TAVQV = TELQV + TAVEL) Address Access Time		270	150	150	ns	(Note 4)
TELQX	Chip Enable Output Enable Time	20	150	70	70	ns	↓
TQVQX	Output Enable Output Enable Time	20	150	70	70	ns	
TGXQZ	Output Enable Output Disable Time	20	150	70	70	ns	
TELEH	Chip Enable Pulse Negative Width	250		150	150	ns	
TELEL	Read or Write Cycle Time	400		230	230	ns	
TEHEL	Chip Enable Pulse Positive Width	150		80	80	ns	
TAVEL	Address Set-up Time	20		0	0	ns	
TELAX	Address Hold Time	60		40	40	ns	

NOTES:
1. All devices guaranteed at worst case limits. Room temperature, 5 volt data provided for information but not guaranteed. Post Rad Data at TD = 1 x 10^5
2. Operating Supply Current (IDDOP) is proportional to Operating Frequency.
3. Capacitance sampled and guaranteed — not 100% tested.
4. AC test Conditions: Inputs: $T_{RISE} = T_{FALL} \leq$ 20nsec; Outputs: 1 TTL Load and 50pF. All timing measurements at 1/2 VDD.
5. Pre-Radiation and Post-Radiation limits.
6. Devices screened to more rigorous electrical specifications are available. Contact factory for details.

HARRIS

HS-G0600RH
HS-G1200RH
HS-G2500RH

RADIATION HARDENED CMOS GATE ARRAYS

AUGUST 1985

Features

- 3 Micron CMOS technology
- Total dose: $>1 \times 10^5$ RAD Si
- Data upset: $>1 \times 10^8$ RAD Si/sec
- Latch-up free to: $>2 \times 10^{12}$ RAD Si/sec
- 600, 1200, and 2500 gate arrays
- 3ns typical gate delay
- 10 MHZ clock frequency
- 74LS-SSI, MSI library implemented
- TTL and CMOS compatibility
- Individually programmable I/O buffers
- Bi-directional and three state I/O's
- Military temperature range
- Multiple package options
- Total dose capabilities above 10^5 RAD Si are available. Contact factory for details.

RH CMOS Gate Array Family

PART NO.	TRANSISTOR	GATE EQUIV.	DIE SIZE	I/O PINS	ROWS/CELLS
HS-G0600RH	2592	648	198 × 165	56	6 × 36
HS-G1200RH	5184	1296	257 × 198	80	12 × 36
HS-G2500RH	10,080	2520	272 × 287	102	14 × 60

BASIC CELL

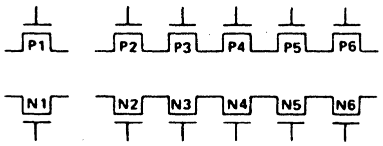

TWO-INPUT NAND
1 GATE EQUIVALENT

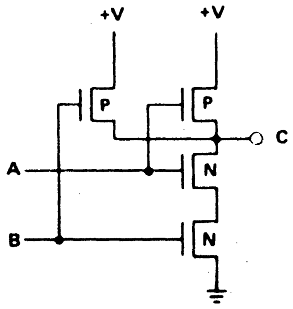

Description

Harris Custom Integrated Circuits Division Special Products Group offers a complete family of semi-custom radiation hardened logic. The HS-G0600RH, HS-G1200RH, and HS-G2500RH are three radiation hardened CMOS gate arrays. These gate arrays use the Harris HCA macro library of 74LS functions. The process utilizes 4um p-channel lengths, 3um n-channel lengths, and 3um minimum feature size.

The HARRIS system minimizes the amount of design and logic coding by offering a library of 74LS equivalent SSI and MSI function designs. There is no need to implement large MSI functions with primative gates.

Each function has a complete data sheet specifying propagation delays and A. C. parameters. A final software program verifies that the original logic description matches the finished artwork.

Each input-output buffer can be individually specified to be input, output, three-state, or bi-directional. CMOS or TTL compatibility can also be specified. The large number of I/O buffers keeps the input/output-to-gate ratio low, insuring that the design is not pin limited.

If your circuit becomes too complex, transition from HCA gate arrays to HCA standard cell is very simple. The same logic description files are used as input to an auto-router. Both HCA gate arrays and HCA standard cells utilize the same SSI, MSI 74LS macro library.

Copyright © Harris Corporation 1985.

RH CMOS Gate Array Specifications

ABSOLUTE MAXIMUM RATINGS

Supply Voltage (V_{CC} − GND)	−0.3V to +8.0V
Input or Output Voltage Applied	(GND − 0.3V) to(V_{CC} + 0.3V)
Storage Temperature	−65°C to +150°C

OPERATING RANGE

Operating Supply Voltage	+4.75V to +5.25V
Operating Temperature	−55°C to +125°C

***CAUTION:** As with all semiconductors, stresses listed under "Absolute Maximum Ratings" may be applied to devices (one at a time) without resulting in permanent damage. This is a stress rating only. Exposure to absolute maximum rating conditions for extended periods may affect device reliability. The conditions listed under "Electrical Characteristics" are the only conditions recommended for satisfactory operation.*

ELECTRICAL CHARACTERISTICS

$V_{CC} = 5.0V \pm 5\%$, T_A = Operating Temperature Range, (TYP Specs; $V_{CC} = 5.0V$, $T_A = 25°C$)

SYMBOL	PARAMETER	INPUT TYPE	MIN	TYP	MAX	UNITS	TEST CONDITIONS
V_{IH}	Input High Voltage	TTL CMOS	2.2 70% V_{CC}		V_{CC} + 0.3 V_{CC} + 0.3	V	
V_{IL}	Input Low Voltage	TTL CMOS			0.8 30% V_{CC}	V	
I_I	Input Leakage		−1.0	0	+1.0	μA	Input without Pull-up GND ≤ V_I ≤ V_{CC} GND ≤ V_I ≤ V_{CC}
V_{OH}	Output High Voltage		2.4			V	I_{OH} = −3.2mA
V_{OL}	Output Low Voltage				0.4	V	I_{OL} = 3.2mA
I_{OZ}	Output Leakage		−1.0		+1.0	μA	GND < V_O < V_{CC} (3-State Output)
C_{IN}	Input Capacitance*				6.0	pF	Single Input Buffer V_I = V_{CC} or GND, f = 1MHz
C_O	Output Capacitance*				6.0	pF	Single Output Buffer V_O = V_{CC} or GND, f = 1MHz
C_{IO}	I/O Capacitance*				6.0	pF	Bidirectional Buffer

A.C.: For A.C. performance, refer to appropriate HCAXXX data sheet. *Capacitance is sampled and guaranteed – not 100% tested.

RH Gate Array I/O Buffers

PART TYPE	DESCRIPTION
900	CMOS Input Buffer
901	CMOS Input Buffer with 18K Pull Up Resistor
910	TTL Input Buffer
911	TTL Input Buffer with 18K Pull Up Resistor
950	3.2 MA Output Buffer
951	3.2 MA Output Buffer – Open Drain P-Channel
952	3.2 MA Output Buffer – Open Drain N-Channel
960	3.2 MA Output Buffer – Three State
970	3.2 MA Bi-Directional Buffer – CMOS Input
971	3.2 MA Bi-Directional Buffer – CMOS Input with 18K Pull Up
980	3.2 MA Bi-Directional Buffer – TTL Input
981	3.2 MA Bi-Directional Buffer – TTL Input with 18K Pull Up

HCA Macro Library (TTL Replacement)

MACRO	DESCRIPTION
SN7400	Dual 2 Input NAND
SN7400	Dual 2 Input NAND with Single Inverter
SN7402	Dual 2 Input NOR
SN7402	Dual 2 Input NOR with Single Inverter
SN7404	Triple 2X Inverter
SN7407	High Fanout Non-Inverting Buffer (5 pF Drive)
SN7408	2 Input AND
SN7410	3 Input NAND
SN7411	3 Input AND
SN7420	4 Input NAND
SN7421	4 Input AND
SN7427	3 Input NOR
SN7429	6 Input NAND
SN7430	8 Input NAND
SN7432	2 Input OR
SN7451	4 Input AND-OR-Invert Gate
SN7473	JK FF — with Reset
SN7474	D FF — with Reset
SN7474	D FF — with Set
SN7474	D FF — with Set and Reset
SN7474	D FF — with Reset – Negative Edge Triggered
SN7474	D FF — Set – Negative Edge Triggered
SN7474	D FF — Set and Reset – Negative Edge Triggered
SN7475	Quad D Type Latch with Individual Resets
SN7485	4 Bit Magnitude Comparator
SN7486	2 Input Exclusive OR
SN74138	3 to 8 Line Decoder
SN74139	2 to 4 Line Decoder
SN74152	8 to 1 Data Selector
SN74157	Quad 2 to 1 Data Selector
SN74161	4 Bit Synchronous Binary Counter with Async Reset
SN74163	4 Bit Synchronous Binary Counter with Sync Reset
SN74164	8 Bit Parallel Output Shift Register
SN74165	8 Bit Parallel Load Shift Register
SN74173	4 Bit D Register with Three State Outputs
SN74175	Quad D FF — with Reset
SN74180	9 Bit Parity Generator
SN74192	4 Bit Synchronous Up Down Decade Counter
SN74193	4 Bit Synchronous Up Down Binary Counter
SN74194	4 Bit Sync Load Bi-Directional Shift Register
SN74240	Octal Inverting Three State Buffer
SN74244	Octal Non-Inverting Three State Buffer
SN74257	Quad 2 to 1 Line Data Selector
SN74273	Octal D FF — with Common Clock
SN74283	4 Bit Binary Full Adder with Fast Carry
SN74352	Dual 4 to 1 Line Data Selector
SN74374	Quad D FF — Three State Outputs
SN74377	Octal D FF — with Enable
SN74393	4 Bit Binary Ripple Counter
SN74645	Octal Bus Transceiver
SN741000B	15:1 Ratio Pull Up Resistor with Enable

HARRIS

HS-DXXXX RH CMOS CELL LIBRARY

AUGUST 1985

RADIATION HARDENED STANDARD CELL

Features

- **Low Power-CMOS Technology**
- **Total Dose: >1 × 10^5 Rad-Si**
- **Data Upset: >1 × 10^8 Rad-Si/sec**
- **Latch-Up Free to: >2 × 10^{12} Rad-Si/sec**
- **Single 5 Volt Supply**
- **Military Temperature Range**
- **Proven Reliable and Manufacturable Process**
- **CMOS and TTL Compatible Inputs and Outputs**
- **Total dose capabilities above 10^5 RAD Si are available. Contact factory for details.**
- **Large Library of SSI Primitive Cells**
- **Up to 40 MHz Clock Frequency**
- **Bidirectional and Three State I/O's**
- **Auto-Place and Auto-Route Capability**
- **3 Micron CMOS Technology**
- **Circuit Densities up to 4000 2-Input NAND Gate Equivalents**
- **I/O Cells Offer 10ns into 100 pF Load**
- **Multiple Package Options**

Description

Harris Semiconductor Custom Integrated Circuits Division (CICD) offers a radiation hardened standard cell library. The HD (high density) STANDARD CELL LIBRARY is a proven, high performance library. It is implemented using Harris Semiconductor's radiation hardened advanced CMOS process. This same mature process is being used to produce Harris radiation hardened gate arrays. This process uses 4um p-channel lengths, 3um n-channel lengths, and a minimum feature size of 3um. The library offers predesigned and precharacterized cells for which the user prescribes the interconnections in order to develop an application specific IC.

The library has a wide assortment of SSI primitive cells to optimize the design. The designer has the flexibility to define new cells to meet any unique requirements.

The library is supported by a design automation system. The software includes schematic capture, logic simulation, auto-place, auto-route, electrical and design rule verification. The system allows the user to perform the logic entry and simulation phases of the design process either at his own facility or at Harris with engineering support.

Package Options

Ceramic DIP	14-48 pins
Ceramic chip carrier (leaded)	68-84 pins
Ceramic chip carrier (leadless)	14-84 pins
Pin grid array (contact factory for current availability)	68-140 pins

Copyright © Harris Corporation 1985

RH Standard Cell Specifications

ABSOLUTE MAXIMUM RATINGS (Note 1 and 2)

Supply Voltage	−0.5V to 7.0V
Input/Output Voltage	VSS − 0.5V to VCC + 0.5V
Input Diode Current	10mA VI<0 or VI>VCC
Output Diode Current	10mA VO<0 or VO>VCC
Power Dissipation	1000mW
Continuous Supply Pin Current VCC or GND	100mA
Storage Temperature Ceramic	−65 to 150°C
Continuous Current per Output	10mA

OPERATING RANGE

Operating Supply Voltage +4.75 V to +5.25 V

Operating Temperature −55°C to +125°C

Notes:

1 Stresses beyond those listed under ABSOLUTE MAXIMUM RATINGS may cause permanent damage to the device. These are stress ratings only and functional operation of the device at these or any other conditions beyond those indicated under RECOMMENDED OPERATING CONDITIONS is not implied. Exposure to absolute maximum rated conditions for extended periods may affect device reliability.

2 All applied voltages are with reference to ground (VSS).

Recommended Operating Conditions

D.C. ELECTRICAL CHARACTERISTICS

VCC = 5V ± 5% TA = Operating Temperature Range

SYMBOL	PARAMETER	INPUT TYPE	MIN	TYP	MAX	UNITS	TEST CONDITIONS
VCC	Operating Supply Voltage		4.75	5.0	5.25	V	
T_A	Operating Temperature		−55	25	125	°C	
VIH	Input High Voltage	TTL CMOS	2.2 70% VCC			V	
VIL	Input Low Voltage	TTL CMOS			0.8 30% VCC	V	
II	Input Current						
	Standard		−1.0		+1.0	μA	VSS<VI<VCC
	Pull Up		−500		+1.0		
	Pull Down		−1.0		+500		
	Pull Up*		−50			μA	VI = 2.2
	Pull Down*				+50	μA	VI = 0.8
VOH	Output Voltage		4.0			V	IOH = −3.2mA
VOL	Output Voltage				0.4	V	IOL = 3.2mA
IOZ	Output Leakage		−10.0		+10.0	μA	VSS<VO<VCC HI−Z
CI**	Input Capacitance			5.0	5.0	pF	VI = VCC or VSS F = 1 MHz
CO**	Output Capacitance			6.0	10.0	pF	VO = VCC or VSS F = 1 MHz
ICCSB	Stand-By Supply				100	μA	VI = VCC or VSS II = 0; IO = 0

*Maximum input current for which specified VI will be maintained.

**Sampled and guaranteed but not 100% tested. These values may vary by package type.

Harris RH High Density Cell Library

CELL	FUNCTIONAL DESCRIPTION	EQUIV. GATES
HD1100	Logic 1/0 Connector	
HD1110	Inverter	.5
HD1130	3X Inverter	.5
HD1150	5X Inverter	.5
HD1160	CMOS Buffer	1.0
HD1180B	TTL to CMOS Buffer	1.0
HD1210A	2 Input NAND	1.0
HD1220	2 Input AND	1.5
HD1230	2 Input NOR	1.0
HD1240	2 Input OR	1.5
HD1310	3 Input NAND	1.5
HD1320A	3 Input AND	2.0
HD1330A	3 Input NOR	1.5
HD1340	3 Input OR	2.0
HD1410	4 Input NAND	2.0
HD1420	4 Input AND	2.5
HD1430	4 Input NOR	3.5
HD1440	4 Input OR	3.0
HD2120	Exclusive-OR	3.0
HD2130	Exclusive-NOR	3.0
HD2140	Transmission Gate	1.5
HD2150	Tri-State INV	1.5
HD2210	4 to 1 MUX	9.0
HD2220	2 to 1 MUX	3.5
HD2230	2, 2-AND, 2-NOR	2.0
HD2240	2, 3-AND, 2-NOR	3.0
HD2250	3, 2-AND, 3-NOR	3.0
HD3100	D FF	5.5
HD3110	D FF W/Reset	6.0
HD3120A	D FF W/Reset, QBR	7.0
HD3130	D FF W/Set, Reset	8.0
HD3140	D FF W/Set, QBR	7.0
HD3150	D FF W/QBR	5.5
HD3200A	JK FF	8.5
HD3210	JK FF W/Reset	8.5
HD3220A	JK FF W/Reset, QBR	8.5
HD3230	JK FF W/Set, Reset	10.0
HD3240	JK FF W/Set	8.0
HD3250	JK FF W/QBR	8.5
HD3260B	JK FF W/R, QBR (POS)	8.5
HD4000A	D Latch W/R, QBR	3.5
HD4010	D Select FF W/S, QBR	9.0
HD4020A	D Select FF W/R, QBR	10.5
HD4030	D Select FF W/S, R, QBR	11.0
HD4040A	Two to Four Decoder	6.0
HD5040A	4 Bit Shift Register	16.0

CELL	FUNCTIONAL DESCRIPTION	EQUIV. GATES
HD5060A	6 Bit Shift Register	24.0
HD5080A	8 Bit Shift Register	32.0
HD6210	2 Input NAND (INV)	1.5
HD6220	2 Input AND (INV)	2.0
HD6230	2 Input NOR (INV)	1.5
HD6240	2 Input OR (INV)	1.5
HD6310	3 Input NAND (INV)	2.0
HD6320	3 Input AND (INV)	2.5
HD6330	3 Input NOR (INV)	2.0
HD6340	3 Input OR (INV)	2.5
HD6410	4 Input NAND (INV)	2.5
HD6420A	4 Input AND (INV)	3.0
HD6430	4 Input NOR (INV)	3.5
HD6440	4 Input OR (INV)	3.5
HD8810	#1 Pad ID (1 side)	
HD8820	#2 Pad ID (2 sides)	
HD8910	VIA	
HD8920	Feed Through Cell	
HD9100	VDD Pad Type A	
HD9110	VDD Pad Type B	
HD9120	VSS Pad Type A	
HD9130	VSS Pad Type B	
HD9210	Input W/Protect. A	
HD9220	Input W/Pullup A	
HD9230	Input W/Pulldown A	
HD9240	Buffered Output A	
HD9250	Bi-Directional A	
HD9310	Input W/Protect. B	
HD9320	Input W/Pullup B	
HD9330	Input W/Pulldown B	
HD9340	Buffered Output B	
HD9350	Bi-Directional B	
HD9410	Input W/Protect. A	
HD9420	Input W/Pullup A	
HD9440	Buffered Output A	
HD9450	Bi-Directional A	
HD9470	High Drive Output A	
HD9510	Input W/Protect. B	
HD9520	Input W/Pullup B	
HD9540	Buffered Output B	
HD9550A	Bi-Directional B	
HD9570	High Drive Output B	
HD9600	VDD Pad Type A	
HD9610	VDD Pad Type B	
HD9620	VSS Pad Type A	
HD9630	VSS Pad Type B	

HARRIS

HS-CXXXXRH

PRELIMINARY

October 1985

CMOS Cell Library
Radiation Hardened Standard Cell

Features

- **Low Power - CMOS Technology**
- **Single 5 Volt Supply**
- **Hardened Against Radiation**
  - **Total Dose:** .... **>1 x 10^5 Rad-Si**
  - **Data Upset:** .... **>1 x 10^8 Rad-Si/sec**
  - **Latch-Up Free to:** .... **>2 x 10^{12} Rad-Si/sec**
  - **Total Dose Capabilities Above 1 x 10^5 Rad-Si are Available. Contact Factory for Details**
- **Military Temperature Range**
- **Proven Reliable and Manufacturable Process**
- **CMOS and TTL Compatible Inputs and Outputs**
- **Large Library of SSI Primitive Cells**
- **74XX Macro Function Library**
- **LSI Peripheral and Communication Macros**
- **Up to 40 MHz Clock Frequency**
- **Auto-Place and Auto-Route Capability**
- **2.5 Micron Drawn Channel Lengths**
- **Circuit Densities up to 7000 2-input NAND Gate Equivalents**
- **I/O Cells Offer 10ns into 100pF Load**
- **Multiple Package Options**

Description

The HSC-RH STANDARD CELL LIBRARY is a proven, high performance library. It is implemented using Harris Semiconductor's radiation hardened advanced CMOS process. This same mature process is being used to produce CICD's HS-GXXXXRH radiation hardened gate arrays. The minimum feature size is 2.5 microns with 2.5 micron N-channel lengths and 3.0 micron P-channel lengths. The library offers predesigned and pre-characterized cells and macros for which the user prescribes the interconnections in order to develop an application specific IC.

The library has a wide assortment of SSI primitive cells, plus a group of macros which are functionally identical to the standard functions provided by the 74XX series of integrated circuits. Also included is a set of LSI macros representing various highly integrated microprocessor peripheral and communication functions. The designer has the choice of intermixing cells or macros from any of the three groups to optimize his design implementation. The designer may choose the design method and group of functions that is most familiar to him.

The library is supported by a design automation system. The software includes schematic capture, logic simulation, auto-place, autoroute, electrical and design rule verification. If preferred, the system allows the customer to perform the logic entry and simulation phases of the design process either at his own facility or at Harris with engineering support.

Package Options

Ceramic DIP	14 - 48 pins
Ceramic chip carrier (leadless)	14 - 48 pins
Ceramic chip carrier (leaded)	64 - 84 pins
Pin grid array (contact factory for current availability).	68 - 140 pins

Copyright © Harris Corporation 1985

Absolute Maximum Ratings:

(Note 1 and 2)

Supply Voltage .... -0.5V to 7.0V
Input/Output Voltage .... VSS -0.5V
VDD +0.5V
Input Diode Current 10mA
VI< 0 or VI > VDD
Output Diode Current 10mA
VO < 0 or VO > VDD
Power Dissipation 1000mW
Continuous Supply Pin Current VDD or VSS 100mA
Storage Temperature .... -65 to 150°C
Continuous Current per Output 10mA

NOTES:

1. Stresses beyond those listed under ABSOLUTE MAXIMUM RATINGS may cause permanent damage to the device. These are stress ratings only and functional operation of the device at these or any other conditions beyond those indicated under RECOMMENDED OPERATING CONDITIONS is not implied. Exposure to absolute maximum rated conditions for extended periods may affect device reliability.
2. All applied voltages are with reference to ground (VSS).

Recommended Operating Conditions:

D.C. Electrical Characteristics: VDD 5V ± 5% T_A = Operating Temperature Range

SYMBOL	PARAMETER	TYPE	MIN	MAX	UNIT	CONDITIONS
VDD	Operating Supply Voltage		4.75	5.25	V	
T_A	Operating Temperature		-55	125	°C	
VIH	Input High Voltage	TTL	2.2		V	
		CMOS	70% VDD		V	
VIL	Input Low Voltage	TTL		0.8	V	
		CMOS		30% VDD	V	
II	Input Current					
	Standard		-1.0	+1.0	μA	VSS < VI < VDD
	Pull Up		-500	+1.0	μA	
	Pull Down		-1.0	+500	μA	
	Pull Up*		-50		μA	VI = 2.2
	Pull Down*			+50	μA	VI = 0.8
VOH	Output Voltage		2.4		V	IOH = -6.0mA
VOL	Output Voltage			0.4	V	IOL = 6.0mA
IOZ	Output Leakage		-10.0	+10.0	μA	VSS < VO < VDD HI-Z
CI**	Input Capacitance			7.0	pF	VI = VDD or VSS F = 1 MHz
CO**	Output Capacitance			10.0	pF	VO = VDD or VSS F = 1 MHz
CIO**	Input/Output Capacitance			15.0	pF	VO = VDD or VSS F = 1 MHz
IDDSB	Stand-By Supply			100	μA	VI = VDD or VSS II = 0; IO = 0

* Maximum input current for which specified VI will be maintained.

** Sampled and guaranteed but not 100% tested. These values may vary by package type.

Cell Functions

SC1010	N - CHANNEL BUS PULL DOWN
SC1020	P - CHANNEL BUS PULL UP
SC1100	INVERTER 1X
SC1110	INVERTER 2X
SC1220	2 INPUT NAND
SC1230	3 INPUT NAND
SC1240	4 INPUT NAND
SC1250	5 INPUT AND
SC1320	2 INPUT NOR
SC1330	3 INPUT NOR
SC1340	4 INPUT NOR
SC1420	EXCLUSIVE OR
SC1430	EXCLUSIVE NOR
SC1440	2 TO 1 MUX
SC1450	NOR LATCH
SC1460	A * NOT(B)
SC1470	3-STATE INVERTER 1X
SC1480	BUFFER 3X
SC1490	3-STATE INVERTER 2X
SC1510	NOT((A * B) + C)
SC1520	NOT((A + B) * C)
SC1530	D LATCH (Q)
SC1540	D LATCH (Q , NOT(Q))
SC1580	D LATCH WITH 3-STATE OUTPUT NOT(Q) 1X
SC1590	D LATCH (Q , R)
SC1610	NAND LATCH
SC1620	NOR LATCH WITH 2 RESETS
SC1630	A + NOT(B)
SC1640	NOT((A + B + C) * D)
SC1650	NOT((A * B) + C + D)
SC1660	SET NOT(RESET) LATCH
SC1710	2 OR
SC1720	2 AND
SC1730	3-STATE INVERTER NOT(G) 1X
SC1800	D FLIP-FLOP (74LS74 EQUIVALENT)
SC1810	D FLIP-FLOP (C,Q,NOT(Q),R)
SC1820	D FLIP-FLOP (C,Q,NOT(Q),R,S)
SC1830	MUX D FLIP-FLOP (C,Q,NOT(Q),S,R)
SC1840	D FLIP-FLOP (C,Q,NOT(Q),S)
SC1850	TOGGLE FLIP-FLOP (C,Q,NOT(Q),S)
SC1860	TOGGLE FLIP-FLOP WITH SYNCHRONOUS LOAD
SC1870	JK FLIP-FLOP (S)
SC1880	JK FLIP-FLOP (R)
SC1890	JK FLIP-FLOP (S,R)
SC1900	3 STATE INVERTER NOT(G) 4X
SC1910	3-STATE 2 INPUT NOR
SC1920	NOT((A + B)* C * D * E)
SC1930	DELAY INVERTER 12ns
SC1940	3-STATE 2 INPUT NOR NOT(G)
SC1950	ONE SHOT 20ns PULSE
SC1960	NOT(((A * B) + C) * D)
SC1970	NOT((A * B) + (C * D))
SC1980	NOT(((A + B) * C) + D)
SC2000	3-STATE INVERTER NOT(G) 2X
SC2030	3 INPUT AND
SC2060	NOT((A + B) * C * D)
SC2080	NOT((A * B * C) + D)
SC2090	DELAY INVERTER 6ns
SC2100	NOT((A + B) * (C + D))
SC2110	NOT((A * B * C) + D + E)
SC2120	3 INPUT OR
SC2130	3-STATE INVERTER 4X
SC2160	1 BIT FULL ADDER
SC7100	TTL INPUT BUFFER WITH PULL UP
SC7110	TTL INPUT BUFFER WITH PULL DOWN
SC7150	TTL INPUT BUFFER
SC7160	CMOS INPUT BUFFER
SC7200	OUTPUT BUFFER
SC7210	OUTPUT BUFFER - OPEN DRAIN P CHANNEL
SC7220	OUTPUT BUFFER - OPEN DRAIN N CHANNEL
SC7230	OUTPUT BUFFER - 3-STATE ACTIVE LOW ENABLE
SC7240	LATCHED INPUT BUFFER - TTL
SC7250	BI-DIRECTIONAL BUFFER WITH TTL INPUT
SC7260	BI-DIRECTIONAL BUFFER WITH TTL INPUT WITH PULL UP
SC7270	BI-DIRECTIONAL BUFFER WITH TTL INPUT WITH PULL DOWN
SC7280	BI-DIRECTIONAL BUFFER WITH CMOS INPUT
SC7300	OUTPUT BUFFER - INVERTING
SC7600	OSCILLATOR 2 TO 30MHz
SC7900	VSS PAD
SC7910	VCC PAD
SC7920	AUXILIARY VSS PAD
SC7930	AUXILIARY VCC PAD

74XX Macro Functions

SN7400
SN7402
SN7404
SN7407
SN7408
SN7410
SN7411
SN7420
SN7421
SN7427
SN7430
SN7432
SN7436
SN7442
SN7451
SN7473
SN7474
SN7475
SN7476
SN7477
SN7483
SN7485
SN7486
SN74107
SN74109
SN74112
SN74113
SN74114
SN74126
SN74133
SN74137
SN74138
SN74139
SN74147
SN74148
SN74151
SN74152
SN74153
SN74154
SN74157
SN74158
SN74160
SN74161
SN74162
SN74163
SN74164
SN74165
SN74166
SN74173
SN74174
SN74175
SN74180
SN74181
SN74182
SN74190
SN74191
SN74192
SN74193
SN74194
SN74195
SN74237
SN74238
SN74240
SN74241
SN74242
SN74243
SN74244
SN74245
SN74251
SN74253
SN74257
SN74258
SN74259
SN74273
SN74280
SN74283
SN74292
SN74298
SN74352
SN74373
SN74374
SN74377
SN74393
SN74645

LSI Macro Functions

SM4702	PROGRAMMABLE BIT RATE GENERATOR
SM6402	UART
SM6406	PROGRAMMABLE ASYNCHRONOUS COMMUNICATIONS INTERFACE
SM6408	ASYNCHRONOUS MANCHESTER ADAPTER
SM6409	MANCHESTER ENCODER/DECODER
SM15530	MANCHESTER ENCODER/DECODER
SM15531	PROGRAMMABLE MANCHESTER ENCODER/DECODER
SM15531B	PROGRAMMABLE MANCHESTER ENCODER/DECODER - HIGH SPEED
SM82C37A	PROGRAMMABLE DMA CONTROLLER
SM82C52	FULL DUPLEX UART WITH BIT RATE GENERATOR
SM82C54	PROGRAMMABLE INTERVAL TIMER
SM82C55A	PROGRAMMABLE PERIPHERAL INTERFACE
SM82C56A	MUART
SM82C59A	PRIORITY INTERRUPT CONTROLLER
SM82C84A	CLOCK GENERATOR/DRIVER
SM82C82	OCTAL BUS DRIVER WITH LATCHED INPUTS
SM82C83	OCTAL BUS DRIVER WITH LATCHED INPUTS - INVERTING
SM82C86	OCTAL BUS TRANSCEIVER
SM82C87	OCTAL BUS TRANSCEIVER - INVERTING
SM82C88	BUS CONTROLLER
SM82C89	BUS ARBITER
SM82C85	STOP CLOCK GENERATOR

Radiation Screen Procedure

1. Two (2) probed good samples per wafer will be selected from ≥ 20% of the wafers in a run. (All wafers in a "run" will have been processed together through all high temperature processing steps and through metallization.)
2. The sample die shall be assembled and tested to the customer's specification for proper operation.
3. The sample devices shall be subjected to a Total Dose Radiation level of 1 x 10^5 Rad-Si (±10%) from a Gamma Cell 220 Cobalt 60 source or equivalent. The samples shall be biased at 5 volts with all inputs high. The dose rate shall be between 50 rads/sec and 200 rads/sec.
4. The samples will be tested to the customer's specifications within one hour after irradiation. The lot will be accepted only if all units, exclusive of nonradiation failures, meet the specified limits.
5. Radiation screening to a higher total dose is available. Customers should contact the factory for details.

Radiation Effects

The HSC-CELL LIBRARY has been designed to survive in a radiation environment and to meet the electrical characteristics. Latchup free operation is achieved by the use of epitaxial starting material. Improved total dose hardness is obtained with special low temperature processing cycles. On a production basis, Harris performs screens for total dose hardness to a level of 1 x 10^5 Rad-Si. Transient radiation tests have shown the following results:

Latch-up free to doses > 2 x 10^{12} rads/sec.
Upset (loss of stored data) > 10^8 rads/sec.

HARRIS

Preliminary

HS-3516RH

High Slew Rate, Wideband, Radiation Resistant, Operational Amplifier

Features

- HIGH SLEW RATE . . . . >$\pm$22V/μs
- FAST SETTLING TIME 450ns
- WIDE POWER BANDWIDTH. 12MHz
- LOW OFFSET VOLTAGE. . . . . $\pm$5mV
- LOW POWER SUPPLY CURRENT 6.5mA
- SHORT CIRCUIT PROTECTION
- RADIATION ENVIRONMENT
  - NEUTRON FLUENCE (ϕ) 5×10^{12}n/cm^2 (E$\geq$10KeV)
  - GAMMA RATE ($\dot{\gamma}$) . . . . . 1×10^9 RADs Si/s
  - GAMMA DOSE (γ) . . . . . 1×10^6 RADs Si

Description

The HS-3516RH is a monolithic, high slew rate, wideband, radiation resistant, operational amplifier. It provides a bandwidth (unity gain stable) of greater than 10MHz and a slew rate in excess of 22V/μsec. Optional frequency compensation adjustment is provided. The HS-3516RH has an internal unity gain frequency compensation capacitor which is internally connected. A clamp node feature enables the user to clamp the output voltage via pin 3 which can source or sink up to 3mA for high frequency clamped switching purposes.

This device is designed to operate from -55°C to $+125^{o}$C and in strategic-level radiation environments.

Package

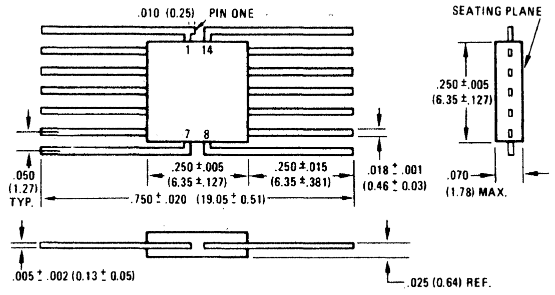
TOP VIEW
.010 (0.25) PIN ONE
1 14
7 8
SEATING PLANE
.250 ±.005 (6.35 ±.127)
.050 (1.27) TYP.
.250 ±.005 (6.35 ±.127)
.250 ±.015 (6.35 ±.381)
.018 ± .001 (0.46 ± 0.03)
.750 ± .020 (19.05 ± 0.51)
.070 (1.78) MAX.
.005 ± .002 (0.13 ± 0.05)
.025 (0.64) REF.

Pinout

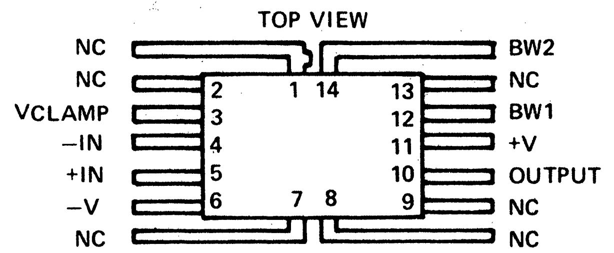
TOP VIEW
NC
NC
VCLAMP
−IN
+IN
−V
NC
BW2
NC
BW1
+V
OUTPUT
NC
NC
2
3
4
5
6
1 14
7 8
13
12
11
10
9

Schematic

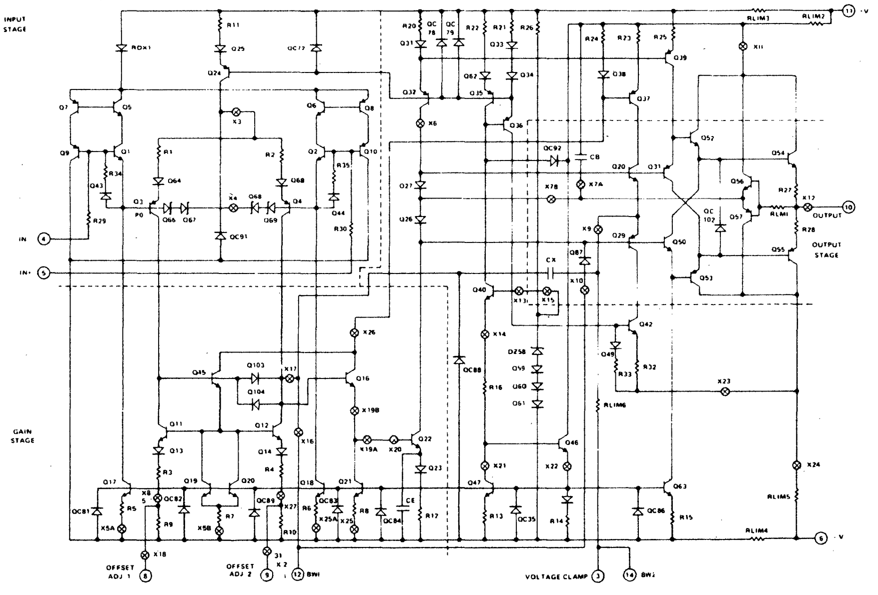
INPUT STAGE
GAIN STAGE
OUTPUT STAGE
IN- 4
IN+ 5
OFFSET ADJ 1 8
OFFSET ADJ 2 9
12 BW1
VOLTAGE CLAMP 3
14 BW2
11 +V
10 OUTPUT
6 -V
RLIM1
RLIM2
RLIM4
RLIM5
RLIM6
CX
CE
CB

Copyright © Harris Corporation 1982

ABSOLUTE MAXIMUM RATINGS

Voltage Between +V and −V terminals	40V	Internal Power Dissipation	625mW
Differential Input Voltage	±15V	Storage Temperature Range	−65°C to +175°C
Output Short Circuit Duration	Indefinite	Operating Temperature Range	−55°C to +125°C

CAUTION: To prevent permanent damage to this device, care should be exercised to insure that the absolute maximum ratings for supply voltages, temperature and voltage or current at any pin is not exceeded during both static and dynamic operation.

ELECTRICAL CHARACTERISTICS +V = 15V, −V = −15V, T_A = −55°C to +125°C

PARAMETER	TEMP	MIN	TYP	MAX	UNITS
Offset Voltage	25°C		1	3	mV
	125°C		2	5	mV
	−55°C		3	6	mV
Input Bias Current	25°C		35	100	nA
	125°C		50	100	nA
	−55°C			200	nA
Input Offset Current	25°C		30	100	nA
	125°C			150	nA
	−55°C			250	nA
Input Resistance	25°C		>100		MΩ
Large Signal Voltage Gain[1]	25°C	90			dB
	Full	90			dB
Common Mode Rejection Ratio[2]	25°C	80	115		dB
	Full	80	90		dB
Supply Current	25°C		5.0	6.5	mA
	125°C			6.5	mA
	−55°C			8.7	mA
Power Supply Rejection Ratio[3]	25°C	80			dB
	Full	80			dB
Output Voltage Swing	25°C	+12.5	+13.0		V
		−11.0	−12.0		V
	125°C	+12.5	+13.0		V
		−11.0	−12.0		V
	−55°C	+12.0			V
		−11.0			V
Output Short Circuit Current	25°C		27	45	mA
	125°C			45	mA
	−55°C			60	mA
Gain Bandwidth Product	25°C		12.0		MHz
	Full		10.0		MHz
Slew Rate[3, 5]	25°C	22	25		V/µs
Rise Time[4]	25°C		30	35	ns
Overshoot[4]	25°C		15	35	%
Overdrive Recovery Time	25°C		2	5	µs
Settling Time[4]	25°C		180	450	ns
	Full			450	ns
Output Clamp Voltage	25°C			0.4	V
Input Clamp (+) Icn− Current (pin 3)	25°C	−1.0		−3.3	mA
	125°C	−1.0		−3.3	mA
	−55°C	−0.8		−3.5	mA
Input Clamp (−) Icn+ Current (pin 3)	25°C	+0.5		+3.0	mA
	125°C	+0.5		+3.0	mA
	−55°C	+0.3		+3.2	mA

NOTES:

1. $V_O = \pm 10V$, $R_L = 2K$
2. $V_{cm} = \pm 10V$, $R_L = 2K$
3. $\Delta V = \pm 5.0V$
4. $A_V = +1$, $V_{IN} = 1V$, $R_L = 2K$, $C_L = 100pf$
5. $C_{BW} = 0$, $V_O = \pm 10V$, $R_L = 2K$, $C_L = 100pf$

HARRIS

HS-3530RH

Low Power-Radiation Resistant Programmable Operational Amplifier

Features

- WIDE RANGE AC PROGRAMMING
  - SLEW RATE 06 TO3V/μs
  - GAIN X BANDWIDTH . . . . 100KHz TO 5.0MHz
- WIDE RANGE DC PROGRAMMING
  - POWER SUPPLY RANGE . . . . ±1.5V TO ±18V
  - SUPPLY CURRENT . . . . 10μA TO 1.2mA
- SHORT CIRCUIT PROTECTION
- RADIATION ENVIRONMENT
  - NEUTRON FLUENCE(Φ) . 5 x 10^{12} n/cm^2 (E ≥ 10KeV)
  - GAMMA RATE($\dot{\gamma}$) . . . . 1 x 10^9 RADS (Si)/s
  - GAMMA DOSE(γ) . . . . 1 x 10^6 RADS (Si)

Description

The HS-3530 is a Low Power Operational Amplifier which is an internally compensated monolithic device offering a wide range of performance specifications. Parameters such as power dissipation, slew rate, bandwidth, noise and input DC parameters are programmed by selecting an external resistor or current source. Supply voltages as low as ±3 volts may be used with little degradation of AC performance. The HS-3530 has been specifically designed to meet exposure to radiation environments. Operation from −55°C to +125°C is guaranteed.

A major advantage of the HS-3530 is that operating characteristics remain virtually constant over a wide supply range (+3V to +15V), allowing the amplifier to offer maximum performance in almost any system, including battery operated equipment. A primary application for this device is in active filtering and conditioning for a wide variety of signals that differ in frequency and amplitude. Also, by modulating the set current, it can be used for designs such as current controlled oscillators/modulators, sample and hold circuits and variable active filters.

Package

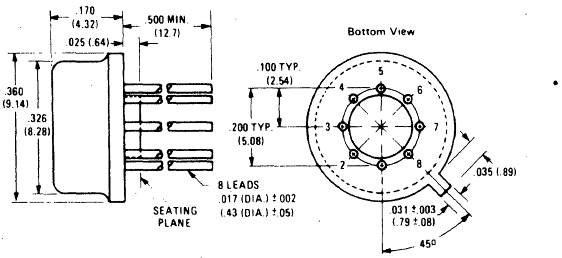
.170
(4.32)
.500 MIN.
(12.7)
.025 (.64)
.360
(9.14)
.326
(8.28)
SEATING PLANE
8 LEADS
.017 (DIA.) ± 002
(.43 (DIA.) ±.05)
Bottom View
.100 TYP.
(2.54)
.200 TYP.
(5.08)
1
2
3
4
5
6
7
8
.035 (.89)
.031 ±.003
(.79 ±.08)
45°

1. All dimensions in inches; millimeters are shown in parentheses.
2. All dimensions ± .010 (±0.25mm) unless otherwise shown.

Pinout

TOP VIEW

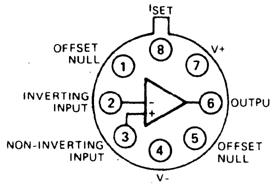
ISET
OFFSET NULL
V+
INVERTING INPUT
OUTPUT
NON-INVERTING INPUT
OFFSET NULL
V-
1
2
3
4
5
6
7
8
-
+

NOTE: Case tied to V-

Schematic

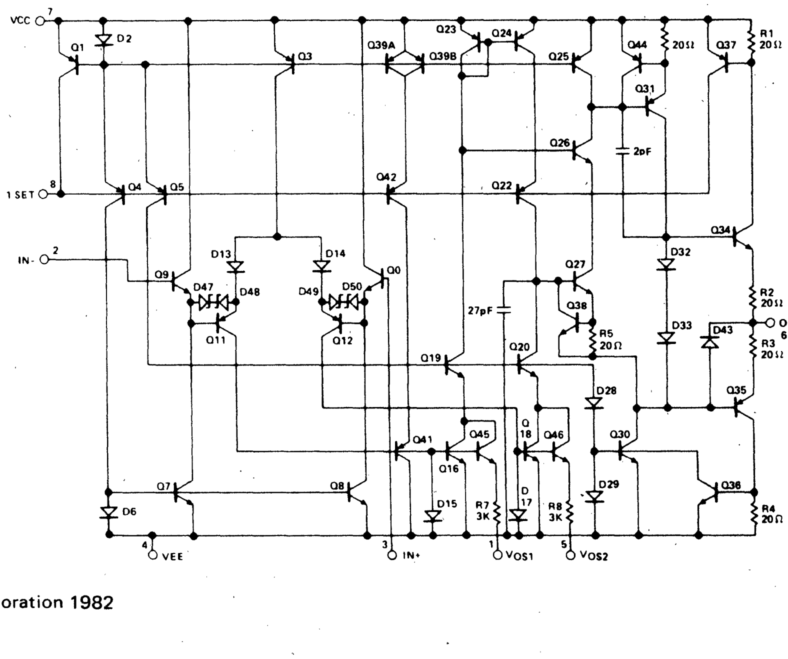
VCC 7
I SET 8
IN- 2
VEE 4
IN+ 3
VOS1 1
VOS2 5
OUT 6
Q1
D2
Q3
Q39A
Q39B
Q23
Q24
Q25
Q44
20Ω
Q37
R1 20Ω
Q31
Q26
2pF
Q4
Q5
Q42
Q22
Q34
D13
D14
Q9
D47
D48
D49
D50
Q0
Q11
Q12
27pF
Q27
Q38
R5 20Ω
D32
R2 20Ω
D33
D43
R3 20Ω
Q19
Q20
D28
Q35
Q41
Q45
Q16
Q 18
Q46
Q30
D29
Q7
Q8
D6
D15
R7 3K
D 17
R8 3K
Q36
R4 20Ω

Copyright © Harris Corporation 1982

ABSOLUTE MAXIMUM RATINGS

Voltage between V+ and V- terminals	40V
Differential Input Voltage	± 20V
Input Voltage (Note 1)	± 15V
I_{SET} (current at I_{SET})	500µA
V_{SET} (voltage to ground at I_{SET})	$(V+ -2.0V) < V_{SET} < V+$
Output Short Circuit Duration	Indefinite
Storage Temperature Range	−65°C to +150°C
Operating Temperature Range	−55°C to +125°C

NOTE:

① For supply voltage less than ±15V, the absolute maximum input voltage is equal to the supply voltage.

PRE-RADIATION ELECTRICAL CHARACTERISTICS

$V_{SUPPLY} = \pm 15V$		$I_{SET} = 1.5\mu A$ ($R_L = 75K\Omega$)			$I_{SET} = 15\mu A$ ($R_L = 5K\Omega$)			
PARAMETER	**TEMP.**	**MIN.**	**TYP.**	**MAX.**	**MIN.**	**TYP.**	**MAX.**	**UNITS**
Offset Voltage	25°C		1	3		1	3	mV
	Full			5			5	mV
Input Bias Current	25°C		1.2			10	20	nA
	Full		2.5			22	40	nA
Input Offset Current	25°C		0.3			2	5	nA
	Full						10	nA
Input Resistance	25°C		>100		50	>100		MΩ
Large Signal Voltage Gain^1	25°C	65K	115K		80K	130K		V/V
	Full	25K	60K		50K	70K		V/V
Common Mode Rejection Ratio^2	25°C	80	115		80	115		dB
	Full				80	110		dB
Supply Current	25°C		13	15		125	150	µA
	Full		14	15		130	160	µA
Power Supply Rejection Ratio^3	25°C	80	130		80	130		dB
	Full				80	120		dB
Output Voltage Swing^2	25°C	±12.5	±14.2		±12.5	±14.2		V
	Full	±10.5	±14.0		±10.5	±14.0		V
Output Current	25°C		±.5			±5		mA
	Full		±.4			±4		mA
Output Short-Circuit Current	25°C		2			14		mA
Gain-Bandwidth Product	25°C		85			850		kHz
	Full		65			640		kHz
Slew Rate^5	25°C		.05			.55		V/µS
Rise Time^4	25°C		7.5			.7		µS
Overshoot^4	25°C		5			10		%
Overdrive Recovery Time	25°C					2		µS

$V_{SUPPLY} = \pm 3V$		$I_{SET} = 1.5\mu A$ ($R_L = 75K\Omega$)			$I_{SET} = 15\mu A$ ($R_L = 5K\Omega$)			
PARAMETER	**TEMP.**	**MIN.**	**TYP.**	**MAX.**	**MIN.**	**TYP.**	**MAX.**	**UNITS**
Large Signal Voltage Gain^1	25°C	25K	60K		25K	75K		V/V
	Full	15K	40K		25K	50K		V/V
Common Mode Rejection Ratio^2	25°C	80	100		80	95		dB
	Full	80	90					dB
Supply Current	25°C		12	15		115	150	µA
	Full			15			160	µA
Power Supply Rejection Ratio^3	25°C	80	105		80	105		dB
	Full	80	100					dB
Output Voltage Swing^1	25°C	±2.0			±2.0			V
	Full	±2.0			±2.0			V
Gain-Bandwidth Product	25°C		72			730		kHz
	Full		60			600		kHz
Slew Rate^5	25°C		04			.4		V/µS
Offset Voltage	25°C		1	3		1	3	mV
	Full			5			5	mV

HARRIS

HS-5104RH

ADVANCE INFORMATION

September 1985

Radiation Hardened High Performance Quad Operational Amplifier

Features

- **Low Offset Voltage** **3.0mV**
- **High Slew Rate** **1.0V/μs**
- **Single 5V Supply Capability**
- **Radiation Environment**
  - **Neutron Fluence (φ)** .... **5×10^{12}n/cm^2 (E≥10KeV)**
  - **Gamma Rate ($\dot{\gamma}$)** .... **1×10^9 rad(Si)/s**
  - **Gamma Dose (γ)** .... **1×10^5 rad(Si)**

Applications

- **High Q, Active Filters**
- **Audio Amplifiers**
- **Instrumentation Amplifiers**
- **Integrators**
- **Signal Generators**

Description

The HS-5104RH is a radiation hardened, high performance, dielectrically isolated monolithic quad operational amplifier that combines superior performance with a high resistance to total dose and prompt gamma radiation as well as neutron bombardment. This general purpose amplifier offers an array of dynamic specifications ranging from a 1V/μs slew rate and a 60kHz full power bandwidth to an output drive current of 10mA.

Fabricated using special radiation hardening techniques developed at Harris, these amplifiers show almost no change in offset voltage and current after exposure to 100K rad(Si) gamma radiation, with only a minor increase in bias current. Complementing these specifications is a post radiation open loop gain in excess of 40K.

This impressive combination of features makes this amplifier ideally suited for a variety of applications such as active filter design, signal conditioning, and instrumentation circuits. Designed to meet exposure in radiation environments, this amplifier is a necessity for satellite, spacecraft, and nuclear power systems where its unique properties will prolong the useful life of a system.

This quad operational amplifier is available in an industry standard pinout allowing for immediate interchangeability with most other quad operational amplifiers.

Radiation Screening Procedure

(1) Two (2) probed good samples per wafer will be selected from ≥20% of the wafers in a run. (All wafers in a "run" will have been processed together through all high temperature processing steps and through metallization.)

(2) The sample die shall be assembled and tested for functionality.

(3) The sample devices shall be subjected to a Total Dose Radiation level of 1×10^5 rad(Si) ±10% from a gamma cell 220 cobalt 60 source or equivalent. The devices will be powered in the configuration illustrated with $V_{SUPPLY} = \pm 15V$. The dose rate shall be between 50 rad/sec and 200 rad/sec.

(4) AV_{OL}, V_{IO}, I_{BIAS}, and I_{IO}, with $V_{SUPPLY} = \pm 15V$, will be measured and recorded for each device within one hour after irradiation. The lot will be accepted only if the sample, exclusive of non-radiation failures, meets the limits of $AV_{OL} \geq 40K$, $V_{IO} \leq 3.0$ mV, $I_{BIAS} \leq 1\mu A$, and $I_{IO} \leq 300nA$ at room temperature.

Pinout

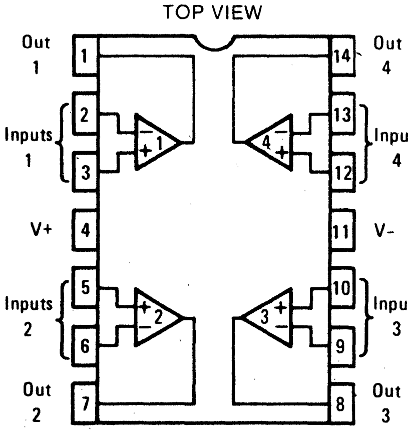

Irradiation Circuit

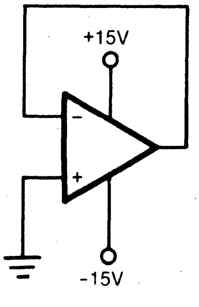

Copyright © Harris Corporation 1984

HARRIS

Preliminary

HS-508ARH

Radiation Resistant
8 Channel CMOS Analog Multiplexer
With Overvoltage Protection

Features

- ANALOG/DIGITAL OVERVOLTAGE PROTECTION
- FAIL SAFE WITH POWER LOSS (NO LATCHUP)
- BREAK-BEFORE-MAKE SWITCHING
- DTL/TTL AND CMOS COMPATIBLE
- ANALOG SIGNAL RANGE ±15V
- ACCESS TIME (TYP.) 500ns
- SUPPLY CURRENT AT 1MHz ADDRESS TOGGLE (TYP.) 4mA
- STANDBY POWER (TYP.) 7.5mW
- RADIATION ENVIRONMENT
  - NEUTRON FLUENCE (ϕ) 1×10^9 n/cm^2 (E $\geqslant$ 10KeV)
  - GAMMA RATE ($\dot{\gamma}$) . . . . 1×10^8 RADs(Si)/s
  - GAMMA DOSE (γ) . . . . 1×10^5 RADs(Si)

Pinout

TOP VIEW

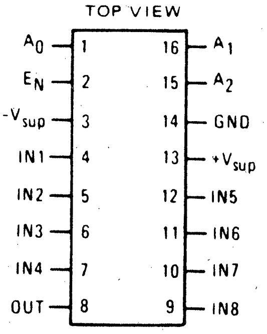
A0
1
EN
2
-Vsup
3
IN1
4
IN2
5
IN3
6
IN4
7
OUT
8
A1
16
A2
15
GND
14
+Vsup
13
IN5
12
IN6
11
IN7
10
IN8
9

Package

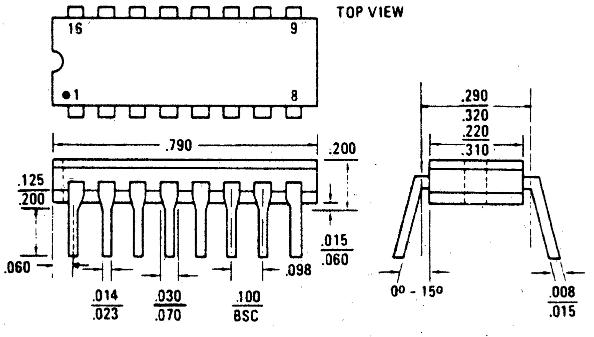
TOP VIEW
16
9
1
8
.790
.200
.125
.200
.060
.014
.023
.030
.070
.100
BSC
.015
.060
.098
.290
.320
.220
.310
0° - 15°
.008
.015

Copyright © Harris Corporation 1982

Description

The HS-508ARH is a dielectrically isolated, radiation resistant, CMOS analog multiplexer incorporating an important feature; it withstands analog input voltages much greater than the supplies. This is essential in any system where the analog inputs originate outside the equipment. They can withstand a continuous input up to 10 volts greater than either supply, which eliminates the possibility of damage when supplies are off, but input signals are present. Equally important, it can withstand brief input transient spikes of several hundred volts; which otherwise would require complex external protection networks. Necessarily,ON resistance is somewhat higher than similar unprotected devices, but very low leakage current combine to produce low errors. Reference Application Notes 520 and 521, available from the Analog Products Division of Harris, for further information on the 508A multiplexer in general.

The HS-508ARH has been specifically designed to meet exposure to radiation environments. Operation from -55°C to $+125^{\circ}$C is guaranteed.

Functional Diagram

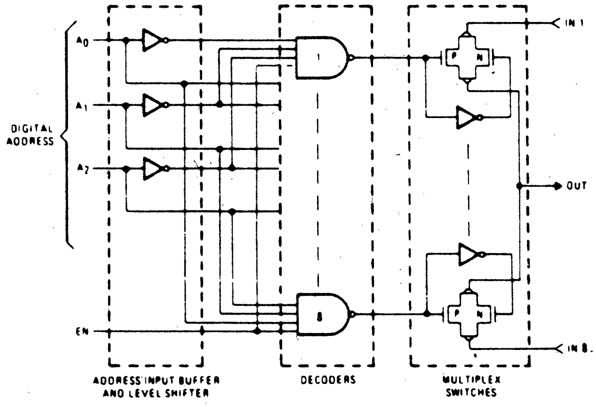
A0
A1
A2
EN
DIGITAL ADDRESS
1
8
P
N
IN 1
OUT
IN 8
ADDRESS INPUT BUFFER AND LEVEL SHIFTER
DECODERS
MULTIPLEX SWITCHES

CAUTION: These devices are sensitive to electrostatic discharge.

Specifications HS-508ARH

ABSOLUTE MAXIMUM RATINGS

Voltage between Supply Pins	40V
V+ to Ground	20V
V_{EN}, V_A, Digital Input Overvoltage:	
V_A	$V_{Supply}(+)$ +4V $V_{Supply}(-)$ -4V
Analog Input Overvoltage:	
V_S	$V_{Supply}(+)$ +20V $V_{Supply}(-)$ -20V
Total Power Dissipation*	725 mW
Operating Temperature	-55°C to +125°C
Storage Temperature	-65°C to +150°C

*Derate 8mW/°C above t_A = 75°C

ELECTRICAL CHARACTERISTICS (Unless Otherwise Specified)

Supplies = +15V, -15V; V_{AH} (Logic Level High) = +4.0V; V_{AL} (Logic Level Low) = +0.8V
For Test Conditions, consult Performance Characterisitcs section.

PARAMETER	TEMP	-55°C to +125°C MIN	TYP	MAX	UNITS
ANALOG CHANNEL CHARACTERISTICS					
*V_S, Analog Signal Range	Full	-15		+15	V
*R_{ON}, On Resistance (Note 1)	+25°C		1.2	1.5	KΩ
	Full		1.5	1.8	KΩ
*$I_{S(OFF)}$, Off Input Leakage Current	+25°C		0.03		nA
	Full			±50	nA
*$I_{D(OFF)}$, Off Output Leakage Current	+25°C		1.0		nA
	Full			±250	nA
*$I_{D(OFF)}$ with Input Overvoltage Applied (Note 2)	+25°C		4.0		nA
	Full			2.0	μA
*$I_{D(ON)}$, On Channel Leakage Current	+25°C		0.1		nA
	Full			±250	nA
DIGITAL INPUT CHARACTERISTICS					
V_{AL}, Input Low Threshold (Note 6)	Full			0.8	V
V_{AH}, Input High Threshold (Note 6)	Full	4.0			V
*I_A, Input Leakage Current (High or Low)	Full			1.0	μA
SWITCHING CHARACTERISTICS					
t_A, Access Time	+25°C		0.5	1.0	μs
t_{OPEN}, Break - Before Make Delay	+25°C		80		ns
$t_{ON(EN)}$, Enable Delay (ON)	+25°C		300		ns
$t_{OFF(EN)}$, Enable Delay (OFF)	+25°C		300		ns
Settling Time (0.1%)	+25°C		1.2		μs
(0.025%)	+25°C		3.5		μs
"OFF Isolation" (Note 3)	+25°C		65		dB
$C_{S(OFF)}$, Channel Input Capacitance	+25°C		5		pF
$C_{D(OFF)}$, Channel Output Capacitance	+25°C		25		pF
C_A, Digital Input Capacitance	+25°C		5		pF
$C_{DS(OFF)}$, Input to Output Capacitance	+25°C		0.1		pF
POWER REQUIREMENTS					
P_D, Power Dissipation	Full		7.5		mW
*I+, Current (Note 4)	Full		0.5	2.0	mA
*I-, Current (Note 4)	Full		0.02	1.0	mA
*I+, Standby (Note 5)	Full		0.5	2.0	mA
*I-, Standby (Note 5)	Full		0.02	1.0	mA

NOTES:
1. V_{OUT} = ±10V, I_{OUT} = -100μA
2. Analog Overvoltage = ±33V
3. V_{EN} = 0.8V, R_L = 1K, C_L = 7pF
   V_S = 3V RMS, f = 500KHz
4. V_{EN} = +4.0V
5. V_{EN} = 0.8V
6. To drive from DTL/TTL Circuits, 1KΩ pull-up resistors to +5.0V supply are recommended

* 100% Tested for Dash 8 at +25°C and +125°C Only.

Truth Table

A_2	A_1	A_0	E_N	"ON" CHANNEL
X	X	X	L	NONE
L	L	L	H	1
L	L	H	H	2
L	H	L	H	3
L	H	H	H	4
H	L	L	H	5
H	L	H	H	6
H	H	L	H	7
H	H	H	H	8

HARRIS

Preliminary

HS-1840RH

Radiation Resistant 16 Channel CMOS Analog Multiplexer with High-Z Analog Input Protection

Features

• HIGH ANALOG INPUT IMPEDANCE DURING POWER LOSS (OPEN)	500MΩ
• LOW POWER CONSUMPTION (STANDBY)	600μW
• ACCESS TIME	500ns

- EXCELLENT IN HI-REL REDUNDANT SYSTEMS
- BREAK-BEFORE-MAKE SWITCHING
- NO LATCH-UP
- RADIATION ENVIRONMENT
  - NEUTRON FLUENCE (ϕ) . 1 x 10^9 n/cm^2(E $\geq$ 10KeV)
  - GAMMA RATE ($\dot{\gamma}$) . . . . 1 x 10^8 RADs (Si)/s
  - GAMMA DOSE (γ) . . . . 2 x 10^5 RADs(Si)

Package

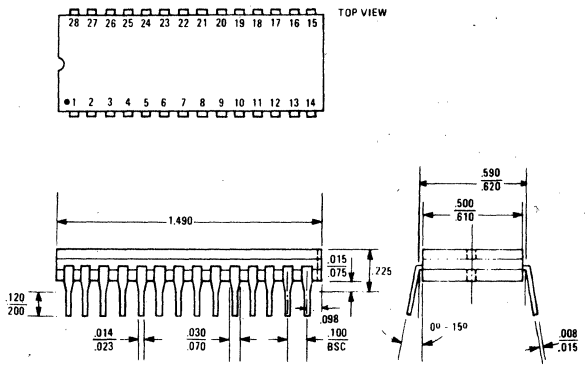
TOP VIEW
28 27 26 25 24 23 22 21 20 19 18 17 16 15
1 2 3 4 5 6 7 8 9 10 11 12 13 14
1.490
.015
.075
.225
.120
.200
.014
.023
.030
.070
.098
.100
BSC
.590
.620
.500
.610
0° - 15°
.008
.015

Description

The HS-1840RH is a radiation resistant, monolithic 16 channel multiplexer constructed with the Harris Linear Dielectric Isolation CMOS process. It is designed to provide a high input impedance to the analog source if device power fails (open) or the analog signal voltage inadvertently exceeds the supply rails during powered operation. Excellent for use in redundant applications, since the secondary device can be operated in a standby unpowered mode affording no additional power drain. But more significantly, a very high impedance exists between the active and inactive devices preventing any interaction. One of sixteen channel selection is controlled by a 4-bit binary address plus an Enable-Inhibit input which conveniently controls the ON/OFF operation of several multiplexers in a system. All digital inputs have electrostatic discharge protection.

The HS-1840RH has been specifically designed to meet exposure to radiation environments. It is available in a 28 pin dual-in-line package and is guaranteed operational from −55°C to +125°C.

Pinout

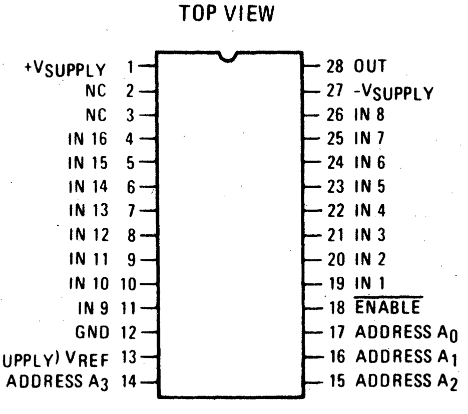
TOP VIEW
+VSUPPLY 1
NC 2
NC 3
IN 16 4
IN 15 5
IN 14 6
IN 13 7
IN 12 8
IN 11 9
IN 10 10
IN 9 11
GND 12
(+5VSUPPLY) VREF 13
ADDRESS A3 14
28 OUT
27 -VSUPPLY
26 IN 8
25 IN 7
24 IN 6
23 IN 5
22 IN 4
21 IN 3
20 IN 2
19 IN 1
18 ENABLE
17 ADDRESS A0
16 ADDRESS A1
15 ADDRESS A2

CAUTION: These devices are sensitive to electronic discharge.

Functional Diagram

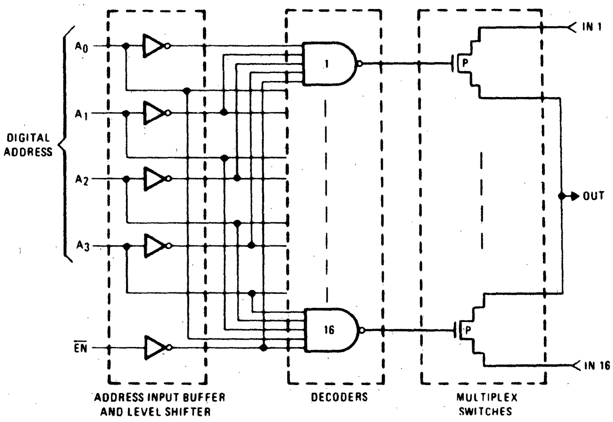
IN 1
A0
A1
A2
A3
DIGITAL ADDRESS
1
P
OUT
16
EN
IN 16
ADDRESS INPUT BUFFER AND LEVEL SHIFTER
DECODERS
MULTIPLEX SWITCHES

Copyright © Harris Corporation 1982

Specifications HS-1840RH

ABSOLUTE MAXIMUM RATINGS

Supply Voltage Between Pins 1 and 27	+40V	Total Power Dissipation*	1200mW
V_{REF} to Ground	+20V	Operating Temperature	-55°C to +125°C
V_{EN}, V_A, Digital Input Overvoltage:			
V_A V_{REF} +4V Ground -4V		Storage Temperature	-65°C to +150°C
Analog Input Overvoltage:			
V_S V_{Supply} (+) +20V V_{Supply} (-) −20V		*Derate 8mW/°C above T_A = +25°C	

ELECTRICAL CHARACTERISTICS

Unless Otherwise Specified:

Supplies = +15V, -15V: V_{REF}(Pin 13) = +5V; V_{AH}(Logic Level High) = 4.0V; V_{AL}(Logic Level Low) = +0.8V
For Test Conditions, consult Performance Characteristics section.

PARAMETER	TEMP.	-55°C to +125°C MIN.	TYP.	MAX.	UNITS
ANALOG CHANNEL CHARACTERISTICS					
*V_S, Analog Signal Range	Full	-5		+15	V
*R_{ON}, On Resistance (Note 1) V_{IN} = +15V	Full		0.5	1.0	KΩ
V_{IN} = -5V	Full		2.5	5.0	KΩ
*I_S(OFF), Off Input Leakage Current	+25°C		0.03		nA
	Full			±100	nA
*I_S(OFF), with Power Off (Note 8)	Full			±100	nA
*I_D(OFF), Off Output Leakage Current	+25°C		1.0		nA
	Full			±1000	nA
* I_D(OFF), or I_S(OFF) with Input Overvoltage Applied (Note 2)	+25°C		50		nA
	Full			±1000	nA
*I_D(ON), On Channel Leakage Current	+25°C		1.0		nA
	Full			±1000	nA
DIGITAL INPUT CHARACTERISTICS					
V_{AL}, Input Low Threshold, TTL Drive (Note 7)	Full			0.8	V
V_{AH}, Input High Threshold, TTL Drive (Note 7)	Full	4.0			V
V_{AL} MOS Drive (Note 3)	+25°C			0.8	V
V_{AH} MOS Drive (Note 3)	+25°C	6.0			V
*I_A, Input Leakage Current (High or Low)	Full			1.0	µA
SWITCHING CHARACTERISTICS					
t_A, Access Time	+25°C		500	1000	ns
t_{OPEN}, Break-Before-Make Delay	+25°C	20	80		ns
t_{ON}(EN), Enable Delay (ON)	+25°C		300	1000	ns
t_{OFF}(EN), Enable Delay (OFF)	+25°C		300	1000	ns
Settling Time (0.1%)	+25°C		1.2		µs
(0.025%)	+25°C		4 1		µs
"Off Isolation" (Note 4)	+25°C		65		dB
C_S(OFF), Channel Input Capacitance	+25°C		5		pF
C_D(OFF), Channel Output Capacitance	+25°C		50		pF
C_A, Digital Input Capacitance	+25°C		5		pF
C_{DS}(OFF), Input ot Output Capacitance	+25°C		0.15		pF
POWER REQUIREMENTS					
P_D, Power Dissipation (Note 5)	+25°C		0.6	15.0	mW
(Note 6)	+25°C		0.6	15.0	mW
*I+, Current Pin 1 (Note 5)	Full		0.02	0.5	mA
*I-, Current Pin 27 (Note 5)	Full		0.02	0.5	mA
*I+, Standby (Note 6)	Full		0.02	0.5	mA
*I-, Standby (Note 6)	Full		0.02	0.5	mA

Truth Table

A_3	A_2	A_1	A_0	$\overline{EN}$	"ON" CHANNEL
X	X	X	X	H	NONE
L	L	L	L	L	1
L	L	L	H	L	2
L	L	H	L	L	3
L	L	H	H	L	4
L	H	L	L	L	5
L	H	L	H	L	6
L	H	H	L	L	7
L	H	H	H	L	8
H	L	L	L	L	9
H	L	L	H	L	10
H	L	H	L	L	11
H	L	H	H	L	12
H	H	L	L	L	13
H	H	L	H	L	14
H	H	H	L	L	15
H	H	H	H	L	16

NOTES:

1. I_{OUT} = 1mA
2. Analog Overvoltage = ±20V
3. V_{REF} = +10V
4. V_{EN} = 4.0V, R_L ≐ 1K, C_L = 7pF, V_S = 3VRMS, f = 500kHz
5. V_{EN} = 0.8V
6. V_{EN} = 4.0V
7. To drive from DTL/TTL circuits 1K pull-up resistors to +5.0V supply are recommended
8. All supplies (V+, V-, +5V) and digital inputs (A_0, A_1, A_2, A_3, EN) opened. Analog input ±10V.

HARRIS

PRELIMINARY

October 1985

HS-302RH/ 303RH/306RH/ 307RH/384RH/390RH

Radiation Hardened CMOS Analog Switches

Features

- Pin for Pin Compatible with Harris HI-3XX Series Analog Switches
- Analog Signal Range
- Low Leakage (Pre RAD Typical at 25°C) 90pA
- Low R_{ON} (Pre RAD Typical at 25°C) 30Ω
- Radiation Hardened
    - ▸ Functional Total Dose Exceeds 1 x 10^5 RAD Si
    - ▸ Low Leakage (Post RAD Typical at 25°C).......20nA
    - ▸ Low R_{ON} (Post RAD Typical at 25°C) 35Ω
- No Latch Up
- Break-Before-Make Delay (Typical)........................65ns
- Versions for 5V and 15V Digital Systems
- Full Military Temperature Range
- Low Operating Power

Applications

- Sample and Hold i.e. Low Leakage Switching
- Op Amp Gain Switching i.e. Low ON Resistance
- Portable Battery Operated Circuits
- Low Level Switching Circuits

Description

The HS-3XXRH family of analog switches are monolithic devices fabricated using CMOS technology and the Harris dielectric isolation process for latch-up free operation. These switches offer low-resistance switching performance for analog voltages up to the supply rails. "ON" resistance is low and stays reasonably constant over the full range of operating voltage and current. Switch impedance also changes very little over temperature. R_{ON} is nominally 30 ohms pre-RAD. All devices provide break-before-make switching.

The HS-302/303/384/390RH switches are for 5V digital systems and have a logic "0" condition with an input less than 0.8V and a logic "1" condition with an input greater than 4.0V. The HS-306/307RH switches are for 15V digital systems and have a low state with an input less than 3.5V and a high state with an input greater than 11.0V.

There are 6 devices in this switch series which are differentiated by type of switch action. All devices are available in ceramic DIP packages. The HS-3XXRH switches can directly replace the HI-3XX series devices.

Functional Diagram

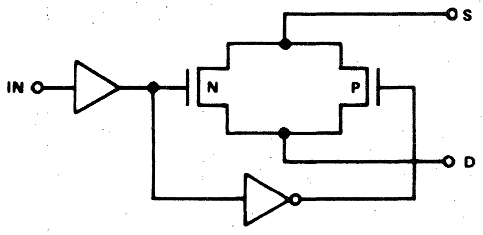

Pinouts

TOP VIEWS

DUAL DPST
HS-302/306RH

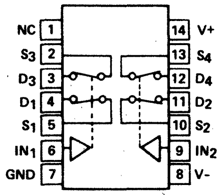
NC 1
S3 2
D3 3
D1 4
S1 5
IN1 6
GND 7
14 V+
13 S4
12 D4
11 D2
10 S2
9 IN2
8 V-

LOGIC	SWITCH
0	OFF
1	ON

DUAL SPDT
HS-303/307RH

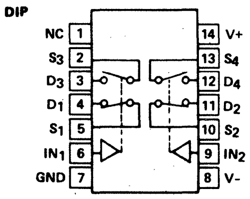
DIP
NC 1
S3 2
D3 3
D1 4
S1 5
IN1 6
GND 7
14 V+
13 S4
12 D4
11 D2
10 S2
9 IN2
8 V-

LOGIC	SW 1 SW 2	SW 3 SW 4
0	OFF	ON
1	ON	OFF

DUAL DPST HS-384RH

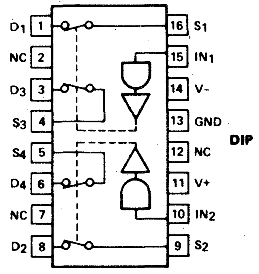
D1 1
NC 2
D3 3
S3 4
S4 5
D4 6
NC 7
D2 8
16 S1
15 IN1
14 V-
13 GND
12 NC
11 V+
10 IN2
9 S2
DIP

LOGIC	SW 1 - 4
0	OFF
1	ON

DUAL SPDT HS-390RH

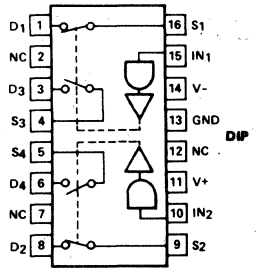
D1 1
NC 2
D3 3
S3 4
S4 5
D4 6
NC 7
D2 8
16 S1
15 IN1
14 V-
13 GND
12 NC
11 V+
10 IN2
9 S2
DIP

LOGIC	SW 1 SW 2	SW 3 SW 4
0	OFF	ON
1	ON	OFF

Copyright © Harris Corporation 1985

Absolute Maximum Ratings (Note 1)

Voltage Between Supplies .... 44V (±22V)

Digital Input Voltage (V_{IN}) .... (V+) +4.0V
(V-) -4.0V

Analog Input Voltage (V_S) .... (V+) +1.5
(V-) -1.5V

Total Power Dissipation 555mW
With Heat Sink 1.25W

Operating Temperature .... -55°C to +125°C

Storage Temperature .... -65°C to +150°C

Electrical Characteristics

Unless otherwise specified supplies = +15V, -15V; V_{IN} = Logic Input.
HS-302/303/384/390RH: Logic "1" V_{IN} = 4V, Logic "0" V_{IN} = 0.8V
HS-306/307RH: Logic "1" V_{IN} = 11V, Logic "0" V_{IN} = 3.5V

PARAMETER	TEMP	MIN	TYP	MAX	UNITS
ANALOG SWITCH CHARACTERISTICS					
Analog Signal Range	Full	-15		+15	V
R_{ON} ON Resistance (Note 2)	+25°C		30	50	Ω
	Full			60	Ω
IS_{OFF} OFF Input Leakage Current (Note 3)	+25°C		0.09	10	nA
	Full			100	nA
ID_{OFF} OFF Output Leakage Current (Note 3)	+25°C		0.09	10	nA
	Full			100	nA
ID_{ON} ON Leakage Current (Note 4)	+25°C		0.09	10	nA
	Full			100	nA
R_{ON} ON Resistance Post 100K RAD(Si) (Note 3)†	25°C		35	65	Ω
IS_{OFF} OFF Input Leakage Current Post 100K RAD(Si) (Note 3)†	25°C		20	500	nA
ID_{OFF} Off Output Leakage Current Post 100K RAD(Si) (Note 3)†	25°C		20	500	nA
ID_{ON} ON Leakage Current Post 100K RAD(Si) (Note 4)†	25°C		30		nA
DIGITAL INPUT CHARACTERISTICS					
V_{INL} Input Low Level*	Full			0.8	V
V_{INH} Input High Level*	Full	4			V
V_{INL} Input Low Level**	Full			3.5	V
V_{INH} Input High Level**	Full	11			V
I_{INL} Input Leakage Current (Low) (Note 3)	Full			1	μA
I_{INH} Input Leakage Current (High) (Note 5)	Full			1	μA
SWITCHING CHARACTERISTICS					
t_{OPEN} Break-Before-Make Delay***	+25°C	30	65	150	ns
t_{ON} Switch On Time*	+25°C		225	300	ns
t_{OFF} Switch Off Time*	+25°C		160	250	ns
t_{ON} Switch On Time**	+25°C		175	250	ns
t_{OFF} Switch Off Time**	+25°C		100	150	ns
POWER REQUIREMENTS					
I+ Current* (Note 8)	+25°C		0.09	0.5	mA
	Full			1	mA
I- Current* (Note 8)	+25°C		0.05	10	μA
	Full			100	μA
I+ Current* (Note 9)	+25°C		0.01	10	μA
	Full			100	μA
I- Current* (Note 9)	+25°C		0.05	10	μA
	Full			100	μA
I+ Current** (Note 10)	+25°C		0.01	10	μA
	Full			100	μA
I- Current** (Note 10)	+25°C		0.01	10	μA
	Full			100	μA
I+ Current** (Note 11)	+25°C		0.01	10	μA
	Full			100	μA
I- Current** (Note 11)	+25°C		0.01	10	μA
	Full			100	μA

* HS-302/303/384/390RH Only. ** HS-306/307RH Only. *** HS-303/307/390RH Only.

† The effects of radiation are quickly annealed at high temperatures, resulting in a return to normal operating parameters within minutes ; at low or normal temperatures, the annealing process takes several hours.

NOTES:

1. As with all semiconductors, stresses listed under "Absolute Maximum Ratings" may be applied to devices (one at a time) without resulting in permanent damage. This is a stress rating only. Exposure to absolute maximum ratings conditions for extended periods may affect device reliability. The conditions listed under "Electrical Characteristics" are the only conditions recommended for satisfactory operation.
2. V_S = ±10V, I_{OUT} = -10mA On resistance derived from the voltage measured across the switch under the above conditions.
3. V_S = ±14V, V_D = ∓14V.
4. V_S = V_D = ±14V.
5. The digital inputs are diode protected MOS gates and typical leakages of 1nA or less can be expected.
8. V_{IN} = 4V (one input) (all other inputs = 0V)
9. V_{IN} = 0.8V (all inputs).
10. V_{IN} = 15V (all inputs).
11. V_{IN} = 0V (all inputs).
12. To drive from DTL/TTL circuits, pull-up resistors to +5V supply are recommended.

HARRIS

HS-15530RH

Radiation Resistant CMOS Manchester Encoder-Decoder

JUNE 1982

Features

- SUPPORT OF MIL-STD-1553
- 1.0 MEGABIT/SEC DATA RATE
- SYNC IDENTIFICATION AND LOCK-IN
- CLOCK RECOVERY
- MANCHESTER II ENCODE, DECODE
- SEPARATE ENCODE AND DECODE
- LOW OPERATING POWER: 50mW AT 5 VOLTS
- FULL MILITARY TEMPERATURE RANGE
- FUNCTIONAL TOTAL DOSE . . . 1 x 10^5 RAD(Si)
- LATCH-UP FREE TO . . . . 5 x 10^{11} RAD (Si)/sec

Pinout

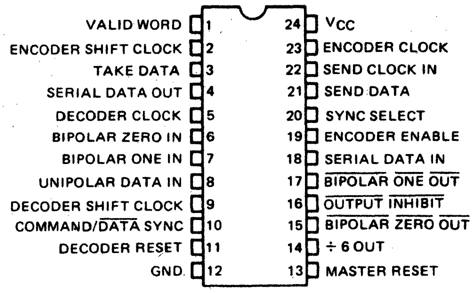
VALID WORD 1
ENCODER SHIFT CLOCK 2
TAKE DATA 3
SERIAL DATA OUT 4
DECODER CLOCK 5
BIPOLAR ZERO IN 6
BIPOLAR ONE IN 7
UNIPOLAR DATA IN 8
DECODER SHIFT CLOCK 9
COMMAND/DATA SYNC 10
DECODER RESET 11
GND 12
24 VCC
23 ENCODER CLOCK
22 SEND CLOCK IN
21 SEND DATA
20 SYNC SELECT
19 ENCODER ENABLE
18 SERIAL DATA IN
17 BIPOLAR ONE OUT
16 OUTPUT INHIBIT
15 BIPOLAR ZERO OUT
14 ÷ 6 OUT
13 MASTER RESET

Description

The Harris HS-15530RH is a high performance, radiation resistant, CMOS device intended to service the requirements of MIL-STD-1553 and similar Manchester II encoded, time division multiplexed serial data protocals. This LSI chip is divided into two sections, an Encoder and a Decoder. These sections operate completely independent of each other, except for the Master Reset function.

This circuit provides many of the requirements of MIL-STD-1553. The Encoder produces the sync pulse and the parity bit as well as the encoding of the data bits. The Decoder recognizes the sync pulse and identifies it as well as decoding the data bits and checking parity.

This integrated circuit is fully guaranteed to support the 1MHz data rate of MIL- STD-1553 over both temperature and voltage while residing in a radiation environment. It interfaces with CMOS, TTL or N channel support circuitry, and uses a standard 5 volt supply.

Block Diagrams

ENCODER

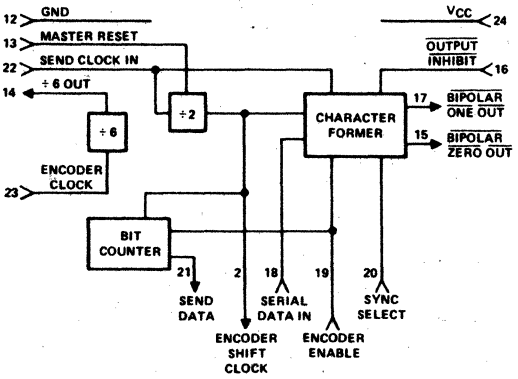
12 GND
13 MASTER RESET
22 SEND CLOCK IN
14 ÷ 6 OUT
÷ 6
ENCODER CLOCK
23
÷ 2
CHARACTER FORMER
VCC 24
OUTPUT INHIBIT 16
17 BIPOLAR ONE OUT
15 BIPOLAR ZERO OUT
BIT COUNTER
21
SEND DATA
2
ENCODER SHIFT CLOCK
18
SERIAL DATA IN
19
ENCODER ENABLE
20
SYNC SELECT

DECODER

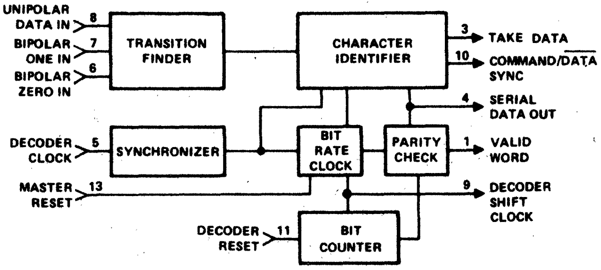
UNIPOLAR DATA IN 8
BIPOLAR ONE IN 7
BIPOLAR ZERO IN 6
TRANSITION FINDER
CHARACTER IDENTIFIER
3 TAKE DATA
10 COMMAND/DATA SYNC
4 SERIAL DATA OUT
DECODER CLOCK 5
SYNCHRONIZER
BIT RATE CLOCK
PARITY CHECK
1 VALID WORD
MASTER RESET 13
9 DECODER SHIFT CLOCK
DECODER RESET 11
BIT COUNTER

Copyright © Harris Corporation 1982

ABSOLUTE MAXIMUM RATINGS

Supply Voltage	+7.0V
Input or Output Voltage Applied	GND -0.3V to V_{CC} + 0.3V
Storage Temperature Range	-65°C to +150°C
Operating Temperature Range	−55°C to +125°C

ELECTRICAL CHARACTERISTICS V_{CC} = 5.0V ±5% T_A = Operating Temperature Range

D.C.

SYMBOL	PARAMETER	MINIMUM	TYPICAL	MAXIMUM	UNITS	TEST CONDITIONS
V_{IH}	Logical "1" Input Voltage	70% V_{CC}			V	
V_{IL}	Logical "0" Input Voltage			20% V_{CC}	V	
V_{IHC}	Logical "1" Input Voltage (Clock)	V_{CC} -0.5			V	
V_{ILC}	Logical "0" Input Voltage (Clock)			GND +0.5	V	
I_{IL}	Input Leakage	-1.0		+1.0	μA	0V ⩽ V_{IN} ⩽ V_{CC}
V_{OH}	Logical "1" Output Voltage	2.4			V	I_{OH} = -3mA
V_{OL}	Logical "0" Output Voltage			0.4	V	I_{OL} = 1.8mA
I_{CCSB}	Supply Current Standby		0.5	2	mA	V_{IN} = V_{CC} = 5.25V Outputs Open
I_{CCOP}	Supply Current Operating*		8.0	10.0	mA	V_{CC} = 5.25V f = 1MHz
C_{IN}	Input Capacitance*		5.0	7.0	pF	
C_O	Output Capacitance*		8.0	10.0	pF	

*Guaranteed and sampled but not 100% tested.

A.C.

ENCODER TIMING V_{CC} = 5.0V ±5% T_A = Operating Temperature Range

SYMBOL	PARAMETER	MINIMUM	TYPICAL	MAXIMUM	UNITS	TEST CONDITIONS
F_{EC}	Encoder Clock Frequency			13	MHz	C_L = 50pF
F_{ESC}	Send Clock Frequency			2.16	MHz	
T_{ECR}	Encoder Clock Rise Time			8	ns	
T_{ECF}	Encoder Clock Fall Time			8	ns	
F_{ED}	Data Rate			1.08	MHz	
T_{MR}	Master Reset Pulse Width	150			ns	
T_{E1}	Shift Clock Delay			125	ns	
T_{E2}	Serial Data Setup	75			ns	
T_{E3}	Serial Data Hold	75			ns	
T_{E4}	Enable Setup	90			ns	
T_{E5}	Enable Pulse Width	80			ns	
T_{E6}	Sync Setup	55			ns	
T_{E7}	Sync Pulse Width	150			ns	
T_{E8}	Send Data Delay	−10		50	ns	
T_{E9}	Bipolar Output Delay			130	ns	

A.C.

DECODER TIMING V_{CC} = 5.0V ±5% T_A = Operating Temperature Range

SYMBOL	PARAMETER	MINIMUM	TYPICAL	MAXIMUM	UNITS	TEST CONDITIONS
F_{DC}	Decoder Clock Frequency			13	MHz	C_L = 50pF
T_{DCR}	Decoder Clock Rise Time			8	ns	
T_{DCF}	Decoder Clock Fall Time			8	ns	
F_{DD}	Data Rate			1.08	MHz	
T_{DR}	Decoder Reset Pulse Width	150			ns	
T_{DRS}	Decoder Reset Setup Time	75			ns	
T_{MR}	Master Reset Pulse Width	150			ns	
T_{D1}	Bipolar Data Pulse Width	T_{DC} +10			ns	①
T_{D2}	Sync Transition Span		18T_{DC}		ns	①
T_{D3}	One Zero Overlap			T_{DC} -10	ns	①
T_{D4}	Short Data Transition Span		6T_{DC}		ns	①
T_{D5}	Long Data Transition Span		12T_{DC}		ns	①
T_{D6}	Sync Delay (ON)		40	110	ns	
T_{D7}	Take Data Delay (ON)		50	110	ns	
T_{D8}	Serial Data Out Delay		80	80	ns	
T_{D9}	Sync Delay (OFF)		90	110	ns	
T_{D10}	Take Data Delay (OFF)		110	110	ns	
T_{D11}	Valid Word Delay		90	110	ns	

NOTE ① : 15T_{DC} +10 = [15 (Decoder Clock Period)] +10ns T_{DC} = Decoder Clock Period = $\frac{1}{F_{DC}}$
These parameters are guaranteed but not 100% tested.

HARRIS

HS-3182

ARINC 429 Bus Interface Line Driver Circuit

Features

- INPUTS T^2L AND CMOS COMPATIBLE
- ADJUSTABLE RISE AND FALL TIMES VIA 2 EXTERNAL CAPACITORS
- PROGRAMMABLE OUTPUT DIFFERENTIAL RANGE VIA VOLTAGE REFERENCE INPUT (V_{REF})
- POWER STROBE INPUT PERMITS LOW QUIESCENT POWER OF $<$ 20mW
- OUTPUTS ARE INHIBITED (0 VOLTS) IF DATA (A) AND DATA (B) INPUTS ARE BOTH IN THE "LOGIC ONE" STATE
- CAN OPERATE UP TO A 100 KILOBITS DATA RATE
- OUTPUT SHORT CIRCUIT PROOF AND CONTAINS OVERVOLTAGE PROTECTION
- DATA "A" AND DATA "B" SIGNALS ARE "AND'D" WITH CLOCK AND SYNC SIGNALS
- FULL MILITARY TEMPERATURE RANGE

Description

The HS-3182 ARINC 429 bus interface driver circuit is a monolithic dielectrically isolated bipolar differential line driver designed to meet the specifications of ARINC 429. This device is intended to be used with a companion chip, HS-3282 CMOS ARINC bus interface circuit, which provides the data formatting and processor interface function.

All logic inputs are T^2L and CMOS compatible. In addition to the DATA(A) and DATA(B) inputs there are also inputs for a CLOCK and SYNC signal which are AND'D with the DATA inputs. This feature was added to enhance system performance and to allow the HS-3182 to be used with devices other than the HS-3282. Also adding to system performance is the $\overline{\text{STROBE}}$ input. To minimize power consumption the $\overline{\text{STROBE}}$ input can be asserted to place the chip in the power-down mode where it draws substantially less current. Four power supplies are required; $+V = +15V \pm 10\%$, $-V = -15V \pm 10\%$, $V_1 = 5V \pm 5\%$ and V_{REF}. V_{REF} is used to program the output voltage swing, such that V_{OUT} (DIFF) $= \pm 2V_{REF}$. Typically, $V_{REF} = V_1 = 5V \pm 5\%$.

The driver output impedance is $75\Omega \pm 20\%$ at 25°C. Output rise and fall times are programmed through the use of two external capacitors, C_A and C_B. To meet the requirements for rise and fall times as specified in ARINC 429, $C_A = C_B = 75pF$ for the high speed operation (100 KBPS) and 500 pF for the low speed operation (12-14.5 KBPS). The outputs are protected against overvoltage and short circuit as shown in the Block Diagram. This device is designed to operate with a case temperature range of $-55°C$ to $+125°C$.

Package

16 LEAD BRAZED DIP

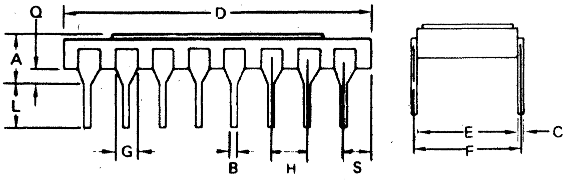
Q
D
A
L
G
B
H
S
E
F
C

LEAD COUNT	DIM. A	DIM. B	DIM. C	DIM. D	DIM. E	DIM. F	DIM. G	DIM. H	DIM. L	DIM. Q	DIM. S
16	— .200	.014 .023	.008 .015	— .840	.220 .310	.290 .320	.030 .070	.100 BSC	.125 .200	.015 .060	— .060

MIN.
MAX.

NOTE: DIMENSIONS IN INCHES

Truth Table

$\overline{\text{STROBE}}$	SYNC	CLOCK	DATA (A)	DATA (B)	A_{OUT}	B_{OUT}	COMMENTS
H	X	X	X	X	HI-Z	HI-Z	Power-Down State
L	X	L	X	X	OV	OV	NULL
L	L	X	X	X	OV	OV	NULL
L	H	H	L	L	OV	OV	NULL
L	H	H	L	H	$-V_{REF}$	$+V_{REF}$	LOW
L	H	H	H	L	$+V_{REF}$	$-V_{REF}$	HIGH
L	H	H	H	H	OV	OV	NULL

Block Diagram

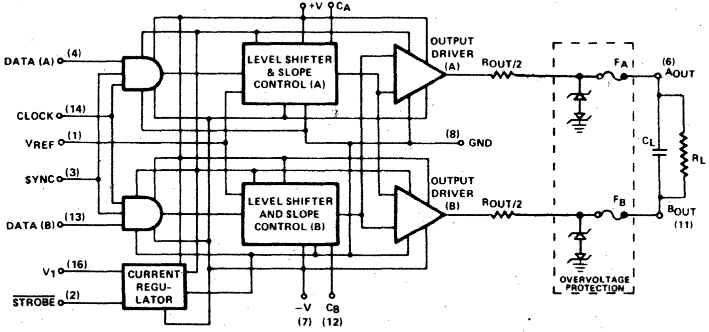
(9) +V
(5) CA
DATA (A) (4)
CLOCK (14)
VREF (1)
SYNC (3)
DATA (B) (13)
V1 (16)
STROBE (2)
LEVEL SHIFTER & SLOPE CONTROL (A)
LEVEL SHIFTER AND SLOPE CONTROL (B)
CURRENT REGULATOR
OUTPUT DRIVER (A)
OUTPUT DRIVER (B)
ROUT/2
ROUT/2
(8) GND
FA
FB
(6) AOUT
BOUT (11)
CL
RL
OVERVOLTAGE PROTECTION
−V (7)
CB (12)

Pinout

TOP VIEW

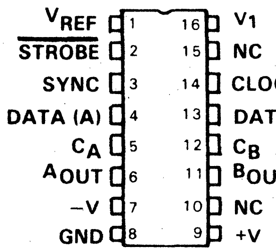
VREF 1
STROBE 2
SYNC 3
DATA (A) 4
CA 5
AOUT 6
−V 7
GND 8
16 V1
15 NC
14 CLOCK
13 DATA (B)
12 CB
11 BOUT
10 NC
9 +V

Copyright © Harris Corporation 1982

FOR COMPLETE DATA SHEET, Call 800-443-0100, Ext. 518

ABSOLUTE MAXIMUM RATINGS

Voltage Between	
+V and −V terminals	40V
V_1	7V
V_{REF}	6V
Logic Input Voltage	(Gnd − 0.3V) to (V_1 + 0.3V)
Output Short Circuit Duration	See Note 1
Output Overvoltage Protection	See Note 3

OPERATING RANGE

Operating Voltage:	
+V	+15V ± 10%
−V	−15V ± 10%
V1	5V ± 5%
V_{REF} (for ARINC 429)	5V ± 5%
V_{REF} (applications other than ARINC)	0V to 6V
Operating Case Temperature	−55°C to +125°C
Storage Temperature	−65°C to +150°C

ELECTRICAL CHARACTERISTICS

$+V = +15V \pm 10\%$, $-V = -15V \pm 10\%$, $V_1 = V_{REF} = 5V \pm 5\%$
Case Temperature: −55°C to +125°C

SYMBOL	PARAMETER	MIN.	TYP.	MAX.	UNITS	TEST CONDITION
I_{CCPD} (+V)	Supply Current +V (Power Down)	−475	+10	475	μA	$\overline{STROBE}$ = H
I_{CCPD} (−V)	Supply Current −V (Power Down)	−475	+10	475	μA	$\overline{STROBE}$ = H
I_{CCOP} (+V)	Supply Current +V (Operating)		11	16	mA	No Load (0-100 kBps)
I_{CCOP} (−V)	Supply Current −V (Operating)		−10	−16	mA	No Load (0-100 kBps)
I_{CCOP} (V_1)	Supply Current V_1 (Operating)		600	975	μA	No Load (0-100 kBps)
I_{CCOP} (V_{REF})	Supply Current V_{REF} (Operating)	−1.0	0.4	−0.15	mA	No Load (0-100 kBps)
V_{IH}	Logic "1" Input Voltage	2.0			V	
V_{IL}	Logic "0" Input Voltage			0.6	V	
V_{OH}	Output Voltage High (Output to ground)	V_{REF} (−250 mV)	V_{REF}	V_{REF} (+250mV)		No Load (0-100 kBps)
V_{OL}	Output Voltage Low (Output to ground)	$-V_{REF}$ (−250mV)	$-V_{REF}$	$-V_{REF}$ (+250mV)		No Load (0-100 kBps)
V_{NULL}	Output Voltage Null	−250	0	+250	mV	No Load (0-100 kBps)
I_{IL}	Input Current (Input Low)		−1	−20	μA	
I_{IH}	Input Current (Input High)		1	10	μA	
I_{OHSC}	Output Short Circuit Current (Output High)	−80	−100		mA	Short to GND
I_{OLSC}	Output Short Circuit Current (Output Low)	80	100		mA	Short to GND
C_{IN}	Input Capacitance			15	pF	
I_{SC} (+V)	Supply Current +V (Short Circuit)			150	mA	Short to GND
I_{SC} (−V)	Supply Current −V (Short Circuit)			−150	mA	Short to GND

NOTES:

① Heat sink may be required for 100KBPS @ +125°C and output short circuit @ +125°C.
Thermal Characteristics: $T_{CASE} = T_{(Junction)} - \Theta_{(Junction-Case)} P_{(Dissipation)}$.

Where: $T_{(Junction\ Max)} = +175°C$
$\Theta_{(Junction-Case)} = 19.6°C/W$
$\Theta_{(Junction-Ambient)} = 86.5°C/W$

② Full Load for ARINC 429: $R_L = 400\Omega$ and $C_L = 30{,}000pF$ in parallel between A_{OUT} and B_{OUT}. (See Block Diagram).

③ Output Overvoltage Protection: The fuses used for output overvoltage protection may be blown by a fault at each output of greater than ±6.5V relative to GND.

POWER SPECIFICATIONS

NOMINAL POWER @25°C, $+V = 15V$, $-V = -15V$, $V_1 = V_{REF} = 5V$

DATA RATE (KBPS)	LOAD	+V	−V	V_1	CHIP POWER	POWER DISSIPATION IN LOAD
0−100	No Load	11 mA	−10 mA	600 μA	325 mW	0
12.5−14	Full Load*	24 mA	−24 mA	600 μA	660 mW	60 mW
100	Full Load*	46 mA	−46 mA	600 μA	1 watt	325 mW

*See Note (2) above.

HARRIS

HS-3282

CMOS ARINC Bus Interface Circuit

October 1985

Features

- ARINC Specification 429 Compatible
- Data Rates of 100 Kilobits or 12.5 Kilobits
- Separate Receiver and Transmitter Section
- Dual and Independent Receivers, Connecting Directly to ARINC Bus
- Serial to Parallel Receiver Data Conversion
- Parallel to Serial Transmitter Data Conversion
- Word Lengths of 25 or 32 Bits
- Parity Status of Received Data
- Generate Parity of Transmitter Data
- Automatic Word Gap Timer
- Single 5-Volt Supply
- Low Power Dissipation
- Full Military Temperature Range

Description

The Harris HS-3282 is a high performanca CMOS bus interface circuit that is intended to meet the requirements of ARINC Specification 429, and similar encoded, time multiplexed serial data protocols. This device is intended to be used with the HS-3182, a monolithic DI bipolar differential line driver designed to meet the specifications of ARINC 429. The ARINC 429 bus interface circuit consists of two (2) receivers and a transmitter operating independently as shown in Figure 1. The two receivers operate at a frequency that is ten (10) times the receiver data rate, which can be the same or different from the transmitter data rate. Although the two receivers operate at the same frequency, they are functionally independent and each receives serial data asynchronously. The transmitter section of the ARINC bus interface circuit consists mainly of a First-In First-Out (FIFO) memory and timing circuit. The FIFO memory is used to hold eight (8) ARINC data words for transmission serially. The timing circuit is used to correctly separate each ARINC word as required by ARINC Specification 429.

Even though ARINC Specification 429 specifies a 32-bit word, including parity, the HS-3282 can be programmed to also operate with a word length of 25 bits. The incoming receiver data word parity is checked, and a parity status is stored in the reciver latch and output on Pin BD08 during the 1st word. [A logic "0" indicates that an odd number of logic "1"s were received and stored; a logic "1" indicates that an even number of logic "1"s were received and stored]. In the transmitter the parity generator will generate either odd or even parity depending upon the status of PARCK control signal. A logic "0" on BD12 will cause odd parity to be used in the output data stream.

Versatility is provided in both the transmitter and receiver by the external clock input which allows the bus interface circuit to operate at data rates from 0 to 100 kilobits. The external clock must be ten (10) times the data rate to insure no data ambiguity.

The ARINC bus interface circuit is fully guaranteed to support the data rates of ARINC specification 429 over both the voltage (±5%) and full military temperature range. It interfaces with TTL, CMOS or NMOS support circuitry, and uses the standard 5-volt V_{CC} supply.

Dip Pinout

TOP VIEW

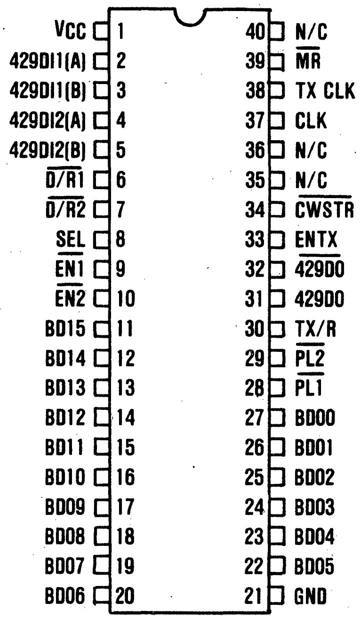
VCC 1
429DI1(A) 2
429DI1(B) 3
429DI2(A) 4
429DI2(B) 5
D/R1 6
D/R2 7
SEL 8
EN1 9
EN2 10
BD15 11
BD14 12
BD13 13
BD12 14
BD11 15
BD10 16
BD09 17
BD08 18
BD07 19
BD06 20
40 N/C
39 MR
38 TX CLK
37 CLK
36 N/C
35 N/C
34 CWSTR
33 ENTX
32 429DO
31 429DO
30 TX/R
29 PL2
28 PL1
27 BD00
26 BD01
25 BD02
24 BD03
23 BD04
22 BD05
21 GND

LCC Pinout

TOP VIEW

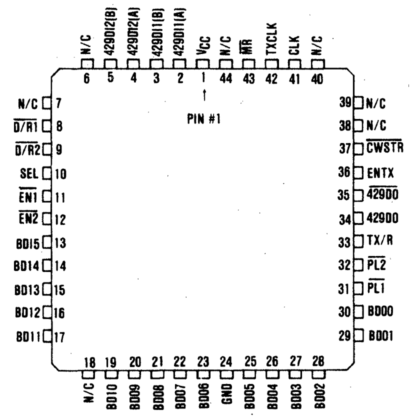
N/C 6
429DI2(B) 5
429DI2(A) 4
429DI1(B) 3
429DI1(A) 2
VCC 1
N/C 44
MR 43
TXCLK 42
CLK 41
N/C 40
PIN #1
N/C 7
D/R1 8
D/R2 9
SEL 10
EN1 11
EN2 12
BD15 13
BD14 14
BD13 15
BD12 16
BD11 17
39 N/C
38 N/C
37 CWSTR
36 ENTX
35 429DO
34 429DO
33 TX/R
32 PL2
31 PL1
30 BD00
29 BD01
18 N/C
19 BD10
20 BD09
21 BD08
22 BD07
23 BD06
24 GND
25 BD05
26 BD04
27 BD03
28 BD02

Copyright © Harris Corporation 1985

Absolute Maximum Ratings

	DASH 8	DASH 5
Voltage at Any Pin (Except 2, 3, 4, & 5)	GND -0.3V to V_{CC} +0.3V	GND -0.3V to V_{CC} +0.3V
Voltage at Pins 2, 3, 4, & 5	-29V to +29V	-29V to +29V
Maximum V_{CC}	7.0V	7.0V
Operating Temperature Range	-55°C to +125°C	0°C to +70°C
Storage Temperature	-65°C to +150°C	-65°C to +150°C

CAUTION: To prevent permanent damage to this device, care should be exercised to insure that the absolute maximum ratings for supply voltages, temperature and voltage or current at any pin is not exceeded during both static and dynamic operation.

Electrical Characteristics V_{CC} = 5V ±5%, TA = Operating Temperature Range

SYMBOL	PARAMETER	MIN	TYP	MAX	UNITS	TEST CONDITIONS
ARINC INPUTS						
V_{IH}	Logic "1" Input Voltage	6.7	10.0	13.0	V	Pin 2-3, 4-5
V_{IL}	Logic "0" Input Voltage	-6.7	-10.0	-13.0	V	Pin 2-3, 4-5
V_{IN}	Null Input Voltage	-2.5	0	+2.5	V	
V_{CH}	Common Mode V			±5	V	
I_{IH}	Input Leakage	75	135	200	µA	$V_{IN} = V_{IH}$
I_{IL}	Input Leakage	-200	-325	-450	µA	$V_{IN} = 0$
R_I	Differential Input Impedance	12			KΩ	
R_H	Input Impedance to V_{CC}	12			KΩ	
R_G	Input Impedance to GND	12			KΩ	
C_I	Differential Input Capacitance*			20	pF	
C_H	Input Capacitance to V_{CC}*			20	pF	
C_G	Input Capacitance to GND*			20	pF	
BI-DIRECTIONAL INPUTS						
V_{IH}	Logic "1" Input Voltage	2.1			V	
V_{IL}	Logic "0" Input Voltage			0.7	V	
I_I	Input Leakage	-1.5		+1.5	µA	$0 \leq V_{IN} \leq V_{CC}$
ALL OTHER INPUTS						
V_{IH}	Logic "1" Input Voltage	3.5			V	
V_{IL}	Logic "0" Input Voltage			0.7	V	
I_{IH}	Input Leakage			10	µA	$V_{IN} = V_{CC}$
I_{IL}	Input Leakage			-10	µA	$V_{IN} = 0$
C_I	Input Capacitance*			15	pF	
OUTPUTS (Including Bi-directional Outputs)						
V_{OH}	Logic "1" Output	2.7			V	I_{OH} = -1.5mA
V_{OL}	Logicv "0" Output			0.4	V	I_{OL} = 1.8mA
C_O	Output Capacitance*			15	pF	
I_{CC1}	Supply Current Stand-by			20.0	mA	V_{CC} = 5.25 V_{IN} = 0
I_{CC2}	Supply Current Operation			20.0	mA	V_{CC} = 5.25 V_{IN} = Logic "1" for all inputs except pins 8 & 33 which are logic "0"

* Guaranteed but not tested.

MILITARY JAN/DESC DIGITAL PRODUCTS

In addition to our standard military temperature range products, Harris Semiconductor has been certified for processing JAN products since 1974. Contact your local Harris sales representative or sales office for the latest status on Harris military products.

DESC Approved Products

Harris Part Number	Description	DESC Drawing Number
CMOS Microprocessors and Peripherals		
MD80C86/B	CMOS 16-bit Microprocessor	8405201QB
MR80C86/B	CMOS 16-bit Microprocessor	84052012C
MD82C52/B	CMOS Serial Controller Interface	8501501YB
MR82C52/B	CMOS Serial Controller Interface	85015013C
MD82C54/B	CMOS Programmable Interval Timer	8406501JB
MR82C54/B	CMOS Programmable Interval Timer	84065013C
MD82C55A-5/B	CMOS Programmable Peripheral Interface	8406601QB
MR82C55A-5/B	CMOS Programmable Peripheral Interface	8406601YC
MD82C59A-5/B	CMOS Priority Interrupt Controller	8501601YB
MR82C59A-5/B	CMOS Priority Interrupt Controller	85016013C
MD82C59A/B	CMOS Priority Interrupt Controller	8501602YB
MR82C59A/B	CMOS Priority Interrupt Controller	85016023C
MD82C82/B	CMOS Octal Latch (non-inverting)	8406701RB
MR82C82/B	CMOS Octal Latch (non-inverting)	84067012C
MD82C84A/B	CMOS Clock Generator/Driver	8406801VB
MR82C84A/B	CMOS Clock Generator/Driver	84068012C
MD82C88/B	CMOS Bus Controller	8406901RB
MR82C88/B	CMOS Bus Controller	84069012C
MD82C89/B	CMOS Bus Arbiter	8552801RB
MR82C89/B	CMOS Bus Arbiter	85528012C
HD1-15530-8	Manchester Encoder-Decoder (MIL-STD-1553 format)	7802901JB
HD4-15530-8	Manchester Encoder-Decoder (MIL-STD-1553 format)	78029013C
CMOS Static RAMs		
HM1-6504S-8	4096x1 CMOS Synchronous Static RAM	8102401VB
HM4-6504S-8	4096x1 CMOS Synchronous Static RAM	8102401XC
HM1-6514S-8	1024x4 CMOS Synchronous Static RAM	8102402VB
HM4-6514S-8	1024x4 CMOS Synchronous Static RAM	8102402XC
HM1-6516-8	2048x8 CMOS Synchronous Static RAM	8403601JB
HM4-6516-8	2048x8 CMOS Synchronous Static RAM	8403601XC
HM1-65162-8	2048x8 CMOS Asynchronous Static RAM	8403602JB
HM4-65162-8	2048x8 CMOS Asynchronous Static RAM	8403602XC
HM1-65262-8	16384x1 CMOS Asynchronous Static RAM	8413201RB
HM4-65262-8	16384x1 CMOS Asynchronous Static RAM	8413201YC

JAN Qualified Products

Harris Part Number	Description	JAN Part Number
CMOS Static RAM		
JAN 6504	4096x1 QPL1 CMOS RAM	M38510/24501BVB
JAN 6514	1024x4 QPL1 CMOS RAM	M38510/24502BVB

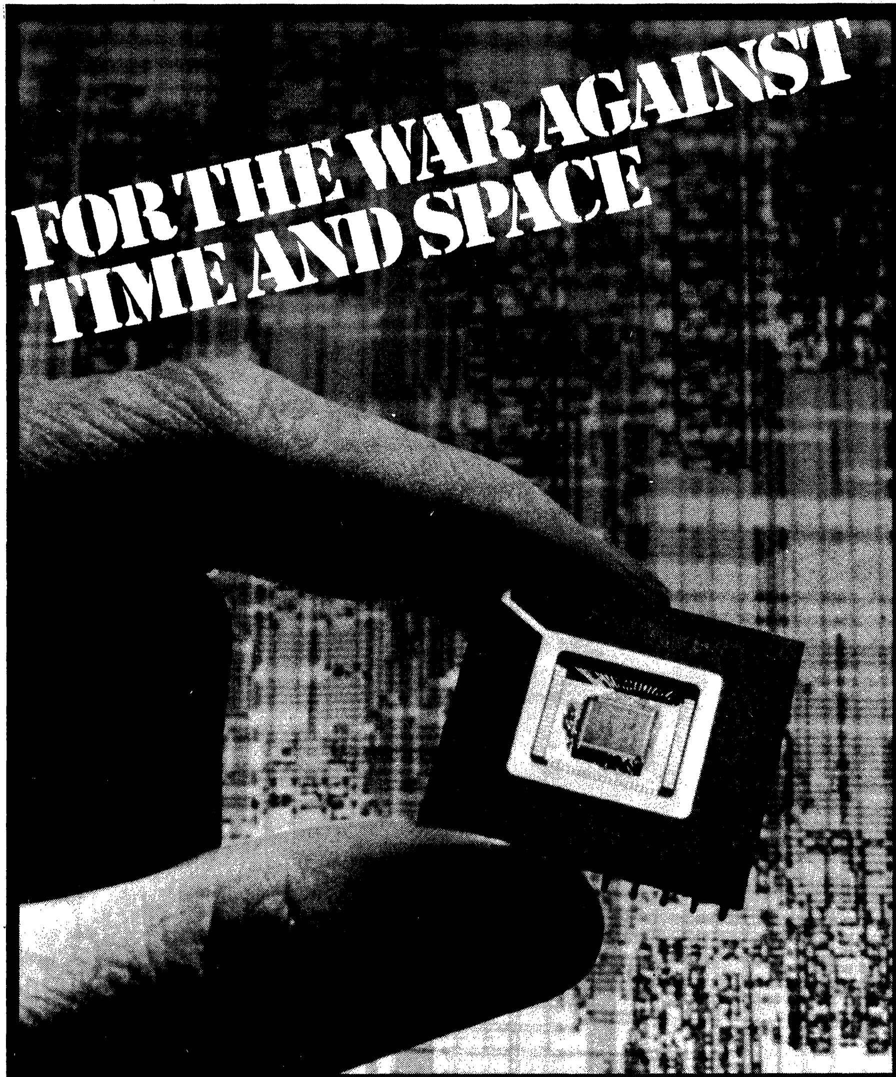

HUGHES MILITARY VLSI PRODUCTS

HCMOS GATE ARRAYS

Three HCMOS array families distinguished by 3 micron, 2 micron and VHSIC compatible processes featuring

- Wide ranging gate complexity
  - H-Series 1.2k to 8k gates
  - V-Series 1.2k to 8k gates
  - U-Series 1k to 40k gates
- Maximum 248 TTL or CMOS Input/output pins and over 16 mA drive capability per I/O
- Advanced design tools to accommodate easy placement and routing of advanced channelless structures
- Mentor or Daisy workstation support for efficient design development and convenient interface

MILITARY PRODUCTS AND SERVICES

STANDARD PRODUCTS/SERVICES

EEPROMs CMOS EEPROMs originated at Hughes. Electrically erasable/programmable non-volatile memory, low-power operation and in-circuit programming.

ROMs Full range of high density, mask programmable CMOS ROMs. Single voltage supply, low quiescent operating power. Industry standard and 1802 compatible control architectures.

1800 SERIES Full range of low-power microprocessors and peripherals.

LCD DRIVERS Industry's widest choice of CMOS liquid crystal drivers for both direct drive and multiplexed applications.

CUSTOMER-OWNED TOOLING Full service foundry. CMOS and PMOS processes. More than 25 variations. Select proximity, projection or DSW alignment techniques.

CUSTOM CIRCUITS

At the forefront of CMOS technology since the late 1960s, Hughes offers multiple CMOS processes, all available for custom circuit designs. Unique combinations of digital, analog and EEPROM may be included in a single chip. In-house capabilities include design, layout, mask making, wafer fabrication, assembly, test and screening.

FOR QUICK ANSWERS AND COMPLETE INFORMATION,

write or call Hughes Semiconductor Division, 500 Superior Avenue, Box H
Newport Beach, CA 92658-8903
(714) 759-2727, TWX 910/596-1374

HUGHES
AIRCRAFT COMPANY

SEMICONDUCTOR DIVISION
Industrial Electronics Group

WHAT'S NEW IN IC MASTER

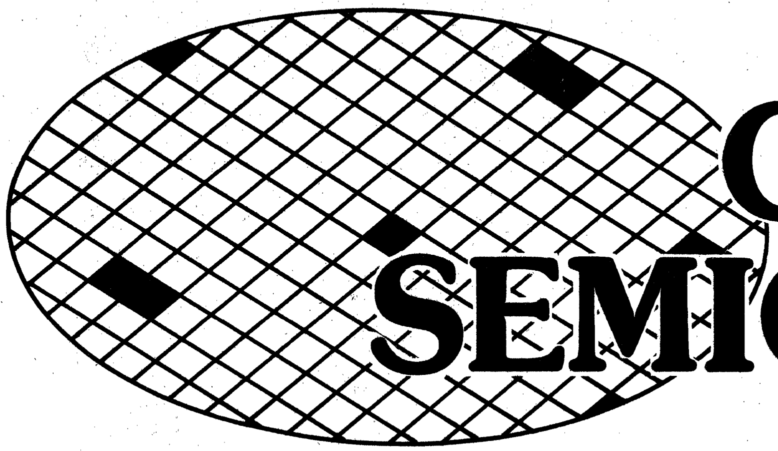

DON'T MISS THE EXPANDED CUSTOM/ SEMICUSTOM IC SECTION

Lists software design tools available for Programmable Logic Devices, Gate Arrays, Standard Cells, and Linear and Linear/ Digital Arrays. Major macros in VLSI/LSI Macrocell Libraries are listed by source.

Volume II, page 4401

inmos

High Performance 16K Static RAM MIL-STD-883C

IMS1400M

FEATURES

- Specifications guaranteed over full military temperature range (−55°C to +125°C)
- MIL-STD-883C Processing
- 45, 55 and 70nsec Chip Enable Access Times
- Maximum Active Power 660mW
- Maximum Standby Power 165mW
- Single +5V ± 10% Supply
- E̅ Power Down Function
- TTL Compatible Inputs and Output
- Fully Static—No Clocks for Timing
- Three-State Output

PIN CONFIGURATION

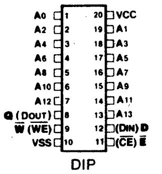
A0 1
A2 2
A4 3
A6 4
A8 5
A10 6
A12 7
Q (DOUT) 8
W̅ (W̅E̅) 9
VSS 10
20 VCC
19 A1
18 A3
17 A5
16 A7
15 A9
14 A11
13 A13
12 (DIN) D
11 (C̅E̅) E̅

DIP

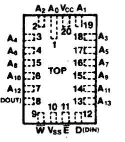
A2 A0 Vcc A1
TOP
W̅ Vss E̅ D(DIN)
Q(DOUT)

CHIP CARRIER

PIN NAMES

A0 - A13 ADDRESS INPUTS	Vcc POWER(+5V)
W̅ (W̅E̅) WRITE ENABLE	Vss GROUND
E̅ (C̅E̅) CHIP ENABLE	
D (DIN) DATA INPUT	
Q (DOUT) DATA OUTPUT	

LOGIC SYMBOL

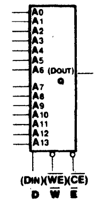
A0
A1
A2
A3
A4
A5
A6
A7
A8
A9
A10
A11
A12
A13
(DOUT) Q
(DIN)(W̅E̅)(C̅E̅)
D W̅ E̅

BLOCK DIAGRAM

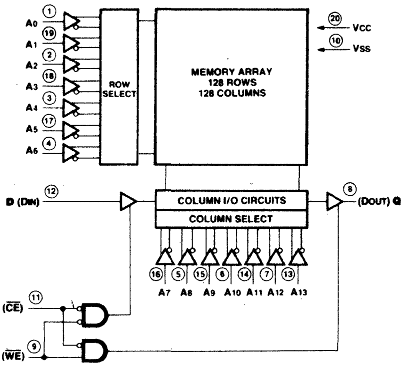
A0
A1
A2
A3
A4
A5
A6
ROW SELECT
MEMORY ARRAY
128 ROWS
128 COLUMNS
VCC
VSS
D (DIN)
COLUMN I/O CIRCUITS
COLUMN SELECT
(DOUT) Q
A7 A8 A9 A10 A11 A12 A13
E̅ (C̅E̅)
W̅ (W̅E̅)

IMS1420M
IMS1423M

FEATURES

- Specifications guaranteed over full military temperature range (−55°C to +125°C)
- MIL-STD-883C Processing
- 4K x 4 Bit Organization
- Fully TTL Compatible
- Common Data Inputs & Outputs
- Single +5V ± 10% Operation
- Power Down Function
- 20 Pin, 300-mil DIP (JEDEC Standard)
- 660mW Maximum Power Dissipation

IMS1420M
- 55 and 70ns Address Access
- 55 and 70nsec Chip Enable Access
- 165mW Maximum Standby Power

IMS1423M
- INMOS Very High Speed CMOS—
- 45 and 55nsec Address Access Times
- 45 and 55nsec Chip Enable Access Times
- 100mW Maximum Standby Power
- 33mW Maximum Standby Power (Stable CMOS levels)
- Pin Compatible with IMS1420M

PIN CONFIGURATION

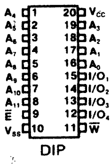
A4 1
A5 2
A6 3
A7 4
A8 5
A9 6
A10 7
A11 8
E̅ 9
Vss 10
20 Vcc
19 A3
18 A2
17 A1
16 A0
15 I/O1
14 I/O2
13 I/O3
12 I/O4
11 W̅

DIP

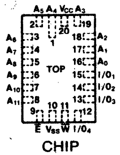
A5 A4 Vcc A3
TOP
E̅ Vss W̅ I/O4

CHIP CARRIER

PIN NAMES

A_0-A_{11} ADDRESS INPUTS	V_{CC} POWER (+5V)
W̅ WRITE ENABLE	V_{SS} GROUND
E̅ CHIP ENABLE	
I/O DATA IN/OUT	

BLOCK DIAGRAM

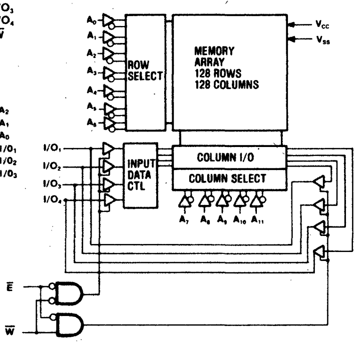
A0
A1
A2
A3
A4
A5
A6
ROW SELECT
MEMORY ARRAY
128 ROWS
128 COLUMNS
Vcc
Vss
I/O1
I/O2
I/O3
I/O4
INPUT DATA CTL
COLUMN I/O
COLUMN SELECT
A7 A8 A9 A10 A11
E̅
W̅

LOGIC SYMBOL

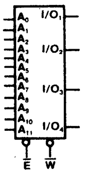
A0
A1
A2
A3
A4
A5
A6
A7
A8
A9
A10
A11
I/O1
I/O2
I/O3
I/O4
E̅ W̅

Inmos Corporation • P.O. Box 16000 • Colorado Springs, Colorado 80935 • (303) 630-4000 • TWX 910 920 4904
Whitefriars • Lewins Mead • Bristol BSl 2NP • England • Phone Bristol 272 290 861 • TLX: 851-444723

INMOS reserves the right to make changes in specifications at any time and without notice. The information furnished by INMOS in this publication is believed to be accurate. However, no responsibility is assumed for its use; nor for any infringements of patents or other rights of third parties resulting from its use. No license is granted under any patents, trademarks, or other rights of INMOS.

inmos

High Performance 64K Static RAM MIL-STD-883C

IMS1600M

FEATURES

- Specifications guaranteed over full military temperature range (−55°C to +125°C)
- MIL-STD-883C Processing
- INMOS Very High Speed CMOS
- Advanced Process—2 Micron Design Rules
- 64K x 1 Bit Organization
- 55 and 70nsec Address Access Times
- 55 and 70nsec Chip Enable Access Times
- Fully TTL Compatible
- Common Data Inputs and Outputs
- Single +5V ± 10% Operation
- Power Down Function
- 22 Pin, 300-mil DIP (JEDEC Standard)

PIN CONFIGURATION

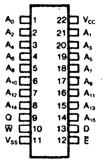
A0 1
A2 2
A4 3
A6 4
A8 5
A10 6
A12 7
A14 8
Q 9
W̄ 10
VSS 11
22 VCC
21 A1
20 A3
19 A5
18 A7
17 A9
16 A11
15 A13
14 A15
13 D
12 Ē

DIP

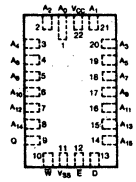
A2 A0 VCC A1
W̄ VSS Ē D

CHIP CARRIER

PIN NAMES

A_0-A_{15}	ADDRESS INPUTS	V_{CC} POWER (+5V)
W̄	WRITE ENABLE	
Ē	CHIP ENABLE	
D	DATA INPUT	
Q	DATA OUTPUT	

LOGIC SYMBOL

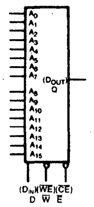
A0
A1
A2
A3
A4
A5
A6
A7
A8
A9
A10
A11
A12
A13
A14
A15
(DOUT) Q
(DIN)(WE)(CE)
D W E

BLOCK DIAGRAM

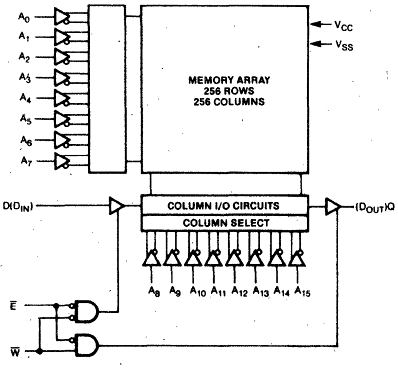
A0
A1
A2
A3
A4
A5
A6
A7
VCC
VSS
MEMORY ARRAY
256 ROWS
256 COLUMNS
D(DIN)
COLUMN I/O CIRCUITS
COLUMN SELECT
(DOUT)Q
A8 A9 A10 A11 A12 A13 A14 A15
Ē
W̄

IMS1620M
IMS1624M

FEATURES

- Specifications guaranteed over full military temperature range (−55°C to +125°C)
- MIL-STD-883C Processing
- INMOS Very High Speed CMOS
- Advanced Process—2 Micron Design Rules
- 16K x 4 Bit Organization
- 55 and 70nsec Address Access Times
- 55 and 70nsec Chip Enable Access Times
- Fully TTL Compatible
- Common Data Inputs & Outputs
- Single +5V ± 10% Operation
- Power Down Function
- Output Enable (Ḡ)*

Pin Configuration

IMS1620M

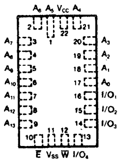
A6 A4 VCC A5
Ē VSS W̄ I/O4

Chip Carrier

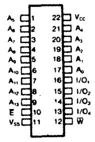
A5 1
A6 2
A7 3
A8 4
A9 5
A10 6
A11 7
A12 8
A13 9
E 10
VSS 11
22 VCC
21 A4
20 A3
19 A2
18 A1
17 A0
16 I/O1
15 I/O2
14 I/O3
13 I/O4
12 W̄

DIP

IMS1624M

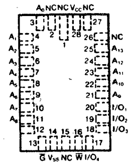
A4 NC NC VCC NC
Ḡ VSS NC W̄ I/O4

Chip Carrier

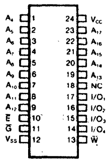
A4 1
A5 2
A6 3
A7 4
A8 5
A9 6
A10 7
A11 8
A12 9
Ē 10
Ḡ 11
VSS 12
24 VCC
23 A17
22 A16
21 A15
20 A14
19 A13
18 NC
17 I/O1
16 I/O2
15 I/O3
14 I/O4
13 W̄

DIP

Pin Names

A_0-A_{13}	ADDRESS INPUTS	V_{CC} POWER (+5V)
W̄	WRITE ENABLE	V_{SS} GROUND
Ē	CHIP ENABLE	Ḡ* OUTPUT ENABLE
I/O	DATA IN/OUT	

Logic Symbol

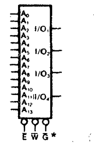
I/O1
I/O2
I/O3
I/O4
E W G*

Block Diagram

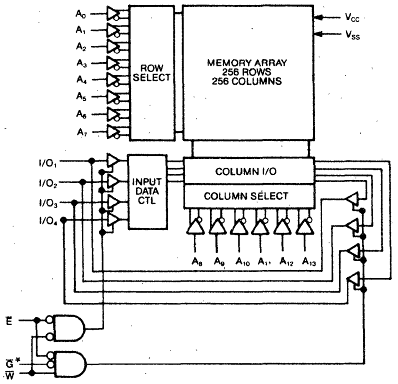
A0
A1
A2
A3
A4
A5
A6
A7
ROW SELECT
MEMORY ARRAY
256 ROWS
256 COLUMNS
VCC
VSS
I/O1
I/O2
I/O3
I/O4
INPUT DATA CTL
COLUMN I/O
COLUMN SELECT
A8 A9 A10 A11 A12 A13
E
Ḡ*
W̄

*Output Enable IMS1624M only

P.O. Box 16000 • Colorado Springs, Colorado 80935 • (303) 630-4000 • TWX 910 920 4904
Whitefriars • Lewins Mead • Bristol BSI 2NP • England • Phone Bristol 0272 290 861 • TLX: 851-444723

INMOS reserves the right to make changes in specifications at any time and without notice. The information furnished by INMOS in this publication is believed to be accurate; however, no responsibility is assumed for its use; nor for any infringements of patents or other rights of third parties resulting from its use. No license is granted under any patents, trademarks, or other rights of INMOS.

IMS2600M

inmos

High Performance 64Kx1 Dynamic RAM MIL-STD-883C

FEATURES

- Specifications guaranteed over full military DRAM temperature range (−55°C to +110°C)
- MIL-STD-883 Processing
- High Speed, $\overline{\text{RAS}}$ Access of 120 and 150ns
- Cycle Times of 190 and 230ns
- Low Power:
  28mW Standby
  358mW Active (350ns Cycle Time)
  468mW Active (190ns Cycle Time)
- Single +5V ± 10% Power Supply
- On-Chip refresh using $\overline{\text{CAS}}$-before-$\overline{\text{RAS}}$, Pin 1 left as N/C for 256K expansion
- Indefinite D_{OUT} Hold Under $\overline{\text{CAS}}$ Control
- Industry Standard 16 Pin Configuration
- Nibble-Mode Capability (High Speed 4 Bit Serial Mode)
- 4ms/256 Cycle Refresh
- All Inputs and Output TTL Compatible
- Read, Write, Read-Modify-Write Capability both on Single Bit and in Nibble Mode Operation
- $\overline{\text{RAS}}$-Only Refresh Capability
- Common I/O Capability using "Early-Write"

PIN CONFIGURATION

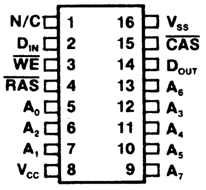
N/C 1
D_IN 2
WE 3
RAS 4
A0 5
A2 6
A1 7
Vcc 8
16 Vss
15 CAS
14 D_OUT
13 A6
12 A3
11 A4
10 A5
9 A7

DIP

LOGIC SYMBOL

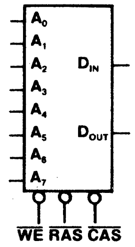
A0
A1
A2
A3
A4
A5
A6
A7
D_IN
D_OUT
WE RAS CAS

BLOCK DIAGRAM

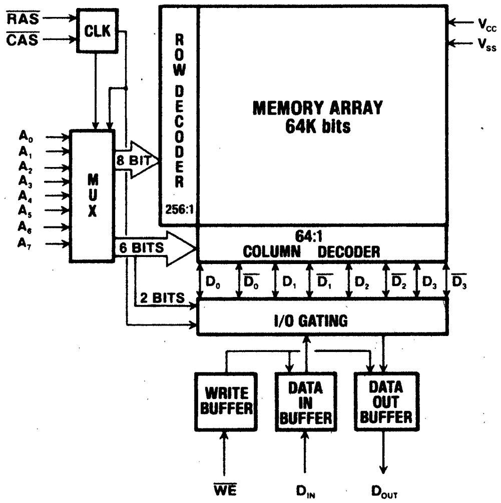
RAS
CAS
CLK
ROW DECODER
256:1
MEMORY ARRAY
64K bits
Vcc
Vss
A0
A1
A2
A3
A4
A5
A6
A7
MUX
8 BIT
6 BITS
64:1
COLUMN DECODER
D0
D̄0
D1
D̄1
D2
D̄2
D3
D̄3
2 BITS
I/O GATING
WRITE BUFFER
DATA IN BUFFER
DATA OUT BUFFER
WE
D_IN
D_OUT

PIN NAMES

A_0-A_7	ADDRESS INPUTS
$\overline{\text{CAS}}$	COLUMN ADDRESS STROBE
$\overline{\text{RAS}}$	ROW ADDRESS STROBE
D_{IN}	DATA IN
D_{OUT}	DATA OUT
$\overline{\text{WE}}$	WRITE ENABLE
V_{CC}	+5 VOLT SUPPLY INPUT
V_{SS}	GROUND

P.O. Box 16000 • Colorado Springs, Colorado 80935 • (303) 630-4000 • TWX 910 920 4904
Whitefriars • Lewins Mead • Bristol BSI 2NP • England • Phone Bristol 0272 290 861 • TLX: 851-444723

INMOS reserves the right to make changes in specifications at any time and without notice. The information furnished by INMOS in this publication is believed to be accurate; however, no responsibility is assumed for its use; nor for any infringements of patents or other rights of third parties resulting from its use. No license is granted under any patents, trademarks, or other rights of INMOS

Military IC's

Note: See other MPS parts in Interface and Linear Sections.

MPS-MIL-STD 883C Products

*100% SCREENING PROCEDURE

MIL-STD-883 METHOD 5004 CLASS B

PRESEAL INTERNAL VISUAL METHOD 2010
MPS P755

Q.A. SAMPLE INSPECTION

FINAL SEAL

STABILIZATION BAKE
METHOD 1008
CONDITION C (24 HRS)

TEMPERATURE CYCLING
METHOD 1010
CONDITION C

CONSTANT ACCELERATION
METHOD 2001
CONDITION E Y1 PLANE

SEAL METHOD
1014
CONDITION A OR B AND C

ELECTRICAL TEST
+25°C

BURN-IN TEST METHOD 1015
CONDITION A, B OR C
160 HRS @ +125°C

FINAL ELECTRICAL
100% GO-NO-GO
STATIC: 25°C SUBGROUP 1 (PDA 5%)
HIGH/LOW TEMP. SUBGROUPS 2 & 3
DYNAMIC AND
SWITCHING: 25°C SUBGROUPS 4 & 9
FUNCTIONAL: 25°C SUBGROUP 7

EXTERNAL VISUAL
METHOD 2009

Q.A. SAMPLE INSPECTION
(ELECTRICAL & VISUAL)
METHOD 5004, PARA 3.1.19

*Selected devices are available with Level "S" screen. Call Micro Power Systems direct for availability.

Micro Power Systems provides selected standard products described in this catalog, as compliant Non-Jan devices, manufactured and tested in accordance with the requirements of MIL STD-883C and MIL-M38510F. Devices tested to Level B requirements are available as standard catalog items. MPS standard "/883" marking, dated 1 January 1985 or later, designates product that meets the requirements of MIL-STD-883, Level B.

MPS standard "883B" marking, dated 31 December 1984 or earlier, designates products that were produced to the requirements of MIL-STD-883B, Level B. Orders placed in 1984 specifying MIL-STD-883B, Level B, and inventory manufactured in this period are in accordance with MIL-STD-883B, Level B. Unless specifically requested otherwise, MPS will ship from /883B inventory using first-in, first-out inventory procedures.

Contact Micro Power Systems direct for a listing of currently available 883C products.

The following MPS parts are available for "Hi-Rel" Military Applications:

Digital-to-Analog Converters

MP562
MP1208
MP1230
MP5520
MP7520
MP7521
MP7522
MP7523
MP7524
MP7528
MP7530
MP7531
MP7533
MP7541
MP7542
MP7543
MP7545
MP7614
MP7616
MP7621
MP7622
MP7623
MP7628
MP7633

Analog-to-Digital Converters

MP7574
MP7581
MP7682
MP7683
MP7684

Precision Voltage References

MP5010
MPREF01
MPREF02
MPREF05
MPREF10

Precision Operational Amplifiers

MPOP01
MPOP02
MPOP03
MPOP04
MPOP05
MPOP07
MPOP08
MPOP09
MPOP10
MPOP11
MPOP12
MPOP14
MPOP27
MPOP37
MP108A
MPOP207
MPOP227
MP2108/A

Digital Signal Processing

MP1010

MICRO POWER SYSTEMS
3100 Alfred Street
Santa Clara, CA 95054
(408) 727-5350

JAN 38510 and DESC Drawing Cross Reference

Monolithic Memories
M38510 Qualified Products
Slash Sheet Cross Reference to Generic Part Number

M38510	01	02	03	04	05	06	07	08	09	10
206		53S441								
209		53S841								
503	10H8	12H6	14H4			10L8	12L6	14L4		
504	16L8A	16R8A	16R6A	16R4A						

DESC Drawing/Generic Part Type Cross Reference

DESC DRAWING PART NO.:

81035	01	R	X
DRAWING NO.	DEVICE TYPE	CASE OUTLINE	LEAD FINISH

Small PAL 20 Devices

DESC Drawing	Generic Part Number	Replacement JAN Specification Part Number
8103501RX	PAL10H8MJ883B	M38510/50301BRX
81035012X	PAL10H8ML883B	M38510/50301B2X
8103501YX	PAL10H8MF883B	M38510/50301BYX
8103502RX	PAL12H6MJ883B	M38510/50302BRX
81035022X	PAL12H6ML883B	M38510/50302B2X
8103502YX	PAL12H6MF883B	M38510/50302BYX
8103503RX	PAL14H4MJ883B	M38510/50303BRX
81035032X	PAL14H4ML883B	M38510/50303B2X
8103503YX	PAL14H4MF883B	M38510/50303BYX
8103504RX	PAL16H2MJ883B	M38510/50304BRX
81035042X	PAL16H2ML883B	M38510/50304B2X
8103504YX	PAL16H2MF883B	M38510/50304BYX
8103505RX	PAL16C1MJ883B	M38510/50305BRX
81035052X	PAL16C1ML883B	M38510/50305B2X
8103505YX	PAL16C1MF883B	M38510/50305BYX
8103506RX	PAL10L8MJ883B	M38510/50306BRX
81035062X	PAL10L8ML883B	M38510/50306B2X
8103506YX	PAL10L8MF883B	M38510/50306BYX
8103507RX	PAL12L6MJ883B	M38510/50307BRX
81035072X	PAL12L6ML883B	M38510/50307B2X
8103507YX	PAL12L6MF883B	M38510/50307BYX
8103508RX	PAL14L4MJ883B	M38510/50308BRX
81035082X	PAL14L4ML883B	M38510/50308B2X
8103508YX	PAL14L4MF883B	M38510/50308BYX
8103509RX	PAL16L2MJ883B	M38510/50309BRX
81035092X	PAL16L2ML883B	M38510/50309B2X
8103509YX	PAL16L2MF883B	M38510/50309BYX

DESC Drawing/Generic Part Type Cross Reference continued
Medium PAL 20 Devices

DESC Drawing	Generic Part Number	Replacement JAN Specification Part Number
8103605RX	PAL16X4MJ883B	M38510/50405BRX
81036052X	PAL16X4ML883B	M38510/50405B2X
8103605YX	PAL16X4MF883B	M38510/50405BYX
8103606RX	PAL16A4MJ883B	M38510/50406BRX
81036062X	PAL16A4ML883B	M38510/50406B2X
8103606YX	PAL16A4MF883B	M38510/50406BYX
8103607RX[1]	PAL16L8AMJ883B	M38510/50401BRX[1]
81036072X	PAL16L8AML883B	M38510/50401B2X
8103607SX	PAL16L8AMW883B	M38510/50401BYX
8103608RX[1]	PAL16R8AMJ883B	M38510/50402BRX[1]
81036082X	PAL16R8AML883B	M38510/50402B2X
8103608SX	PAL16R8AMW883B	M38510/50402BYX
8103609RX[1]	PAL16R6AMJ883B	M38510/50403BRX[1]
81036092X	PAL16R6AML883B	M38510/50403B2X
8103609SX	PAL16R6AMW883B	M38510/50403BYX
8103610RX[1]	PAL16R4AMJ883B	M38510/50404BRX[1]
81036102X	PAL16R4AML883B	M38510/50404B2X
8103610SX	PAL16R4AMW883B	M38510/50404BYX
8103611RX	PAL16L8A-2MJ883B	M38510/50407BRX
81036112X	PAL16L8A-2ML883B	M38510/50407B2X
8103611YX	PAL16L8A-2MF883B[2]	M38510/50407BYX
8103612RX	PAL16R8A-2MJ883B	M38510/50408BRX
81036122X	PAL16R8A-2ML883B	M38510/50408B2X
8103612YX	PAL16R8A-2MF883B[2]	M38510/50408BYX
8103613RX	PAL16R6A-2MJ883B	M38510/50409BRX
81036132X	PAL16R6A-2ML883B	M38510/50409B2X
8103613YX	PAL16R6A-2MF883B[2]	M38510/50409BYX
8103614RX	PAL16R4A-2MJ883B	M38510/50410BRX
81036142X	PAL16R4A-2ML883B	M38510/50410B2X
8103614YX	PAL16R4A-2MF883B[2]	M38510/50410BYX

***Note:** For New Medium 20-Pin PAL Designs, only the "A" versions of these products are recommended. (See DESC No's 8103607 through 8103610.) Only the "A" versions of the medium PAL family are planned for JAN qualification by Monolithic Memories Inc., and will be more readily available for customer production needs over time.

[1] **Note:** Inactive for new designs for the R Case outline only. Use applicable QPL M38510 device.

[2] **Note:** The Military Products Division will be converting from the bottom brazed flatpack to a "W" package cerpack during 1985.

Medium PAL 24 Devices:

DESC Drawing	Generic Part Number	Replacement JAN Specification Part Number
8506501RX	PAL16L8A-4MJ883B	
8506501SX	PAL16L8A-4MF883B	
85065012X	PAL16L8A-4ML883B	
8506502RX	PAL16R8A-4MJ883B	
8506502SX	PAL16R8A-4MF883B	
85065022X	PAL16R8A-4ML883B	
8506503RX	PAL16R6A-4MJ883B	
8506503SX	PAL16R6A-4MF883B	
85065032X	PAL16R6A-4ML883B	
8506504RX	PAL16R4A-4MJ883B	
8506504SX	PAL16R4A-4MF883B	
85065042X	PAL16R4A-4ML883B	
8412901LX	PAL20L8AMJS883B	M38510/50501BJX
8412901KX	PAL20L8AMW883B	
84129013X	PAL20L8AML883B	M38510/50501B3X
8412902LX	PAL20R8AMJS883B	M38510/50502BJX
8412902KX	PAL20R8AMW883B	
84129023X	PAL20R8AML883B	M38510/50502B3X
8412903LX	PAL20R6AMJS883B	M38510/50503BJX
8412903KX	PAL20R6AMW883B	
84129033X	PAL20R6AML883B	M38510/50503B3X
8412904LX	PAL20R4AMJS883B	M38510/50504BJX
8412904KX	PAL20R4AMW883B	
84129043X	PAL20R4AML883B	M38510/50504B3X
32K PROM:		
82008B1JX	53S3281J883B	M38510/21102BJX
82008B1ZX	53S3281L883B	M38510/21102B3X
82008B2JX	53S3281AJ883B	
82008B2ZX	53S3281AL883B	

IMPORTANT NOTE—Part Number Interpretation
When ordering to JAN 38510 and DESC drawing numbers, the lead finish designator (last letter in part number) is commonly called out as "X". This is a way of stating that the customer will accept the standard manufacturer's lead finish for the package ordered. "X" *is not* a lead finish designator in itself, therefore, when product is shipped, the actual lead finish designator will be marked on the devices. At the present time, standard lead finishes on Monolithic Memories military products are as follows:

MMI Package Designator	Package Type	Standard Lead Finish	Mil-Spec Lead Finish Designator
J	Ceramic Dip	Solder Dip	A
F	Bottom Brazed Flatpack	Gold	C
W	Ceramic Flatpack	Solder Dip	A
L	Ceramic Leadless Chip Carrier	Gold	C

Future DESC Drawing Plans

Registered 16K PROM
(53RA1681/53RS1681)

FIFO Products
(57401, 57402, 57411, 57412, 57413)

Double-Density-PLUS™ Interface

Additional 24-Pin PAL Devices
(PAL20L10A, PAL20X4A, PAL20X8A, PAL20X10A)

PAL20RA10

PAL32R16

Double-Density-PLUS™ Interface is a trademark of Monolithic Memories

Military Ordering Information

Products have diffe rent numbering formats. These formats in conjunction with the product selection guides by function will enable you to select the proper military level component.

PAL®Device Programmable Array Logic

PAL14L4 M J 883B

PROGRAMMABLE ARRAY LOGIC FAMILY

NUMBER OF ARRAY INPUTS

OUTPUT TYPE
- H = Active High
- L = Active Low
- C = Complementary
- P = Programmable
- R = Registered
- RA = Registered Asynchronous
- S = Shared
- X = Exclusive OR Registered
- A = Arithmetic Registered

HI-REL SCREENING LEVEL
883B = Mil-Std-883, Class B

PACKAGE TYPE
- J = Ceramic Dip
- F = Flat Pack - Bottom Brazed
- L = Leadless Chip
- W = Cerpack

TEMPERATURE RANGE
M = -55°C to +125°C

SPEED/POWER
- A = High Speed
- A-2 = High Speed and 1/2 Power
- A-4 = High Speed and 1/4 Power

NUMBER OF OUTPUTS

8-Bit/Double-Density PLUS™ Interface

SN54LS373 J 883B

STANDARD PREFIX

TEMPERATURE CODE
- 74 = Commercial
- 54 = Military

FAMILY
- S = Schottky
- LS = Low-Power Schottky
- ACT = Advanced CMOS, TTL-Compatible

HI-REL SCREENING LEVEL
883B = Mil-Std-883, Class B

PACKAGE TYPE
- J = Ceramic Dip
- L = Leadless Chip
- W = Cerpack

UNIQUE THREE-DIGIT PART NUMBER

High Performance PROMs

53S328 1 A J 883B

TEMPERATURE CODE
- 6 = Commercial
- 5 = Military

PRODUCT
- 3 = Programmable Read Only Memory (PROM)

FAMILY
- S = Schottky
- RA = Registered Asynchronous
- RS = Registered Synchronous
- D Diagnostic
- DA = Diagnostic Asynchronous

MEMORY SIZE
- 1 = 1024 bits
- 2 = 2048 bits
- 4 = 4096
- 8 = 8192 bits
- 16 = 16384 bits
- 32 = 32768 bits

HI-REL SCREENING LEVEL
883B = Mil-Std-883, Class B

PACKAGE
- N = Plastic Dip
- J = Ceramic Dip
- F = Flat Pack - Bottom Brazed
- NL = Plastic Leadless Chip Carrier
- NS = Plastic SKINNYDIP®
- JS = Ceramic SKINNYDIP®
- L = Leadless Chip Carrier
- W = Cerpack

PERFORMANCE
- None = Standard
- A = Enhanced

OUTPUT DESIGNATOR
- 0 = Open Collector
- 1 = Three State
- 3 = Two State

NUMBER OF OUTPUTS
- 4 = 4 bits
- 8 = 8 bits

DESC Drawing Numbering System

82008 B1 J X

DRAWING NUMBER FOR PRODUCT OR FAMILY

PROGRAMMING PROCEDURE/ DEVICE TYPE

LEAD FINISH
- A = Hot Solder Dip
- B = Tin Plate
- C = Gold Plate
- X = Any Lead Finish

CASE OUTLINE (same as JAN 38510 Outlines)

JAN Part Numbering System

JM38510/ 503 01 B R A

JAN DESIGNATOR
Parts cannot be marked with a "J" unless qualified and approved for listing on QPL.

GENERAL PROCUREMENT SPEC

REFERS TO DETAIL SPEC
- 203 = 1K PROM (256 x 4)
- 204 = 2K PROM (512 x 4)
- 206 = 4K PROM (1K x 4)
- 207 = 256 PROM (32 x 8)
- 208 = 4K PROM (512 x 8)
- 209 = 8K PROM (1K x 8, 2K x 4)
- 210 = 16K PROM (2K x 8, 4K x 4)
- 211 = 32K PROM (8K x 8)
- 503 = Programmable Array Logic
- 504 = Programmable Logic
- 505 = Programmable Logic

DEFINES DEVICE TYPE

LEAD FINISH
- A = Hot Solder Dip
- B = Tin Plate
- C = Gold Plate
- X = Any Lead Finish

PACKAGE TYPE
- E = 16 Lead 1/4 x 7/8 Dip
- F = 16 Lead 1/4 x 3/8 Flatpack
- J = 24 Lead 1/2 x 1-1/4 Dip
- K = 24 Lead 3/8 x 5/8 Flatpack
- R = 20 Lead 1/4 x 1-1/16 Dip
- V = 18 Lead 1/4 x 15/16 Dip
- 2 = 20 Lead 0.35 x 0.35 LCC
- X = 24 Lead 3/8 x 3/8 Flatpack
- Y = 20 Lead 3/8 x 3/8 Flatpack
- Y = 20 Lead 5/16 x 1.0 Dip
- Z = 24 Lead 1/4 x 3/8 Flatpack
- 3 = 28 Lead 0.45 x 0.45 LCC

PROCESSING LEVEL
- Class S
- Class B

SKINNYDIP® is a registered trademark of Monolithic Memories

WHAT'S NEW IN IC MASTER

DON'T MISS THE NEW DIGITAL SIGNAL PROCESSING IC SECTION

Easy to find DSP devices.

Volume I, Page 801

**THOMSON
COMPONENTS
MOSTEK**

**MILITARY
PRODUCTS**

16,384 x 1-BIT DYNAMIC RAM
MKB4116(P/J)-82/83/84 MKB4116(E/F)-83/84
PROCESSED TO MIL-STD-883, METHOD 5004, CLASS B

FEATURES

☐ Extended operating temperature range ($-55\,°C \leq T_A \leq +110\,°C$)

☐ Recognized industry standard 16-pin configuration from Mostek

☐ 150ns access time, 320ns cycle (MKB4116-82)
200ns access time, 375ns cycle (MKB4116-83)
250ns access time, 410ns cycle (MKB4116-84)

☐ ±10% tolerance on all power supplies (+12, ±5)

☐ Low power: 462mW active, 30mW standby (max)

☐ Output data controlled by CAS and unlatched at end of cycle to allow two dimensional chip selection and extended page boundary

☐ Common I/O capability using "early write" operation

☐ Read-Modify-Write, RAS-only refresh, and Page-mode capability

☐ All inputs TTL compatible, low capacitance, and protected against static charge

☐ 128 refresh cycles (2msec refresh interval: −83, −84)

☐ Leadless chip carrier (E) and flat pack (F) available for high density applications, −83/84

☐ JAN version (MIL 38510/240)

DESCRIPTION

The MKB4116 is an MOS dynamic random access memory circuit organized as 16,384 words by 1 bit, providing wide operating margins, both internally and to the system user. The MKB4116 is fabricated using Mostek's double-poly, N-channel silicon gate, Poly I™ process. This process and the use of a single transistor dynamic storage cell provide the maximal circuit density and reliability, while maintaining high performance capability. The use of dynamic circuitry throughout, including sense amplifiers, minimizes power dissipation without sacrificing speed or operating margin. Multiplexed address inputs (a feature pioneered by Mostek for its 4K RAMs) permits the MKB4116 to be packaged in a standard 16-pin DIP. This package configuration is compatible with widely available automated testing and insertion equipment. Non-critical clock timing requirements allow use of the multiplexing technique while maintaining high performance.

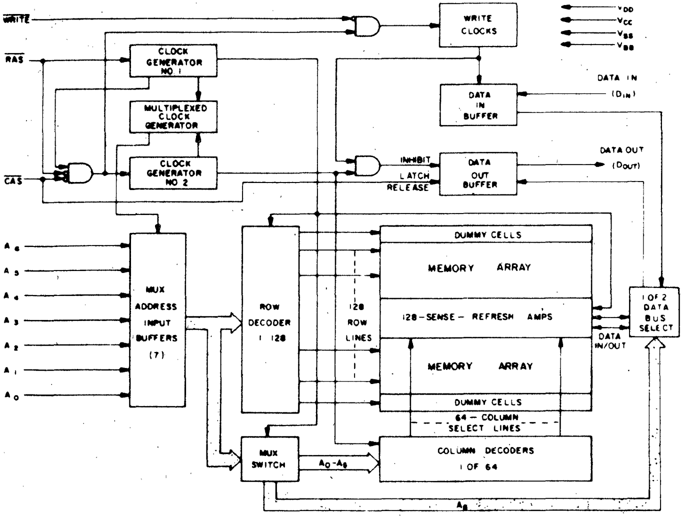
WRITE
RAS
CAS
CLOCK GENERATOR NO 1
MULTIPLEXED CLOCK GENERATOR
CLOCK GENERATOR NO 2
WRITE CLOCKS
VDD
VCC
VSS
VBB
DATA IN (DIN)
DATA IN BUFFER
INHIBIT
LATCH RELEASE
DATA OUT BUFFER
DATA OUT (DOUT)
A6
A5
A4
A3
A2
A1
A0
MUX ADDRESS INPUT BUFFERS (7)
ROW DECODER 1 128
128 ROW LINES
DUMMY CELLS
MEMORY ARRAY
128-SENSE-REFRESH AMPS
MEMORY ARRAY
DUMMY CELLS
64-COLUMN SELECT LINES
1 OF 2 DATA BUS SELECT
DATA IN/OUT
MUX SWITCH
A0-A6
COLUMN DECODERS 1 OF 64
A6

Figure 1. Block Diagram

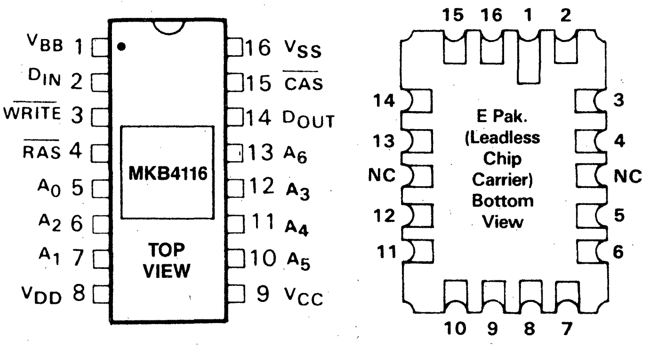
VBB 1
DIN 2
WRITE 3
RAS 4
A0 5
A2 6
A1 7
VDD 8
16 VSS
15 CAS
14 DOUT
13 A6
12 A3
11 A4
10 A5
9 VCC
MKB4116
TOP VIEW
15 16 1 2
14
13
NC
12
11
3
4
NC
5
6
10 9 8 7
E Pak. (Leadless Chip Carrier) Bottom View

Figure 2. Pin Connections

PIN NAMES

A0 - A6	Address Inputs	WRITE	Read/Write Input
CAS	Col. Address Strobe	V_{BB}	Power (−5V)
D_{IN}	Data In	V_{CC}	Power (+5V)
D_{OUT}	Data Out	V_{DD}	Power (+12V)
RAS	Row Address Strobe	V_{SS}	Ground

FOR COMPLETE DATA SHEET, Call 800-443-0100, Ext. 518

PRELIMINARY

PROCESSED TO MIL-STD-883, METHOD 5004, CLASS B, 65,536 x 1-BIT DYNAMIC RAM MKB4564 (P/E) - 82/83/84

FEATURES

- ☐ Military temperature range: $-55°C \leq T_C \leq +110°C$
- ☐ Dynamic burn in at 125°C for 160 hours
- ☐ Recognized industry standard 16-pin configuration from Mostek
- ☐ Single +5 V (± 10%) supply operation
- ☐ On chip substrate bias generator for optimum performance
- ☐ Typical ordering information

MKB4564P-82 150 ns t_{RAC}
MKB4564P-83 200 ns t_{RAC}
MKB4564P-84 250 ns t_{RAC}

- ☐ Low power: 300 mW active, max
  22 mW standby, max
- ☐ Extended D_{OUT} hold using $\overline{CAS}$ control (Hidden Refresh)
- ☐ Common I/O capability using "early write"
- ☐ Read, Write, Read-Write, Read-Modify-Write and Page Mode capability
- ☐ All inputs TTL compatible, low capacitance, and protected against static charge
- ☐ Scaled POLY 5™ technology
- ☐ 128 refresh cycles (2 msec)
  Pin 9 is not needed for refresh

DESCRIPTION

The MKB4564 is the new generation dynamic RAM. Organized 65,536 words by 1 bit, it is the successor to the industry standard MKB4116. The MKB4564 utilizes Mostek's scaled POLY 5 process technology as well as advanced circuit techniques to provide wide operating margins, both internally and to the system user. The use of dynamic circuitry throughout, including the 512 sense amplifiers, assures that power dissipation is minimized without any sacrifice in speed or internal and external operating margins. Refresh characteristics have been chosen to maximize yield (low cost to user) while maintaining compatibility between dynamic RAM generations.

Multiplexed address inputs (a feature dating back to the industry standard MK4096, 1973) permit the MKB4564 to be packaged in a standard 16-pin DIP with only 15 pins required for basic functionality. The MKB4564 is designed to be compatible with the JEDEC standards for the 64K x 1 dynamic RAM.

The output of the MKB4564 can be held valid up to 10 μsec by holding $\overline{CAS}$ active low. This is quite useful since refresh cycles can be performed while holding data valid from a previous cycle. This feature is referred to as Hidden Refresh.

The 64K RAM from Mostek is the culmination of several years of circuit and process development, proven in predecessor products.

PIN OUT

Figure 1

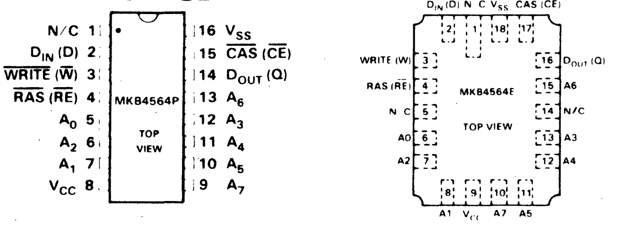

DUAL-IN-LINE PACKAGE

LEADLESS CHIP CARRIER

PIN FUNCTIONS

Table 1

A_0-A_7	Address Inputs	$\overline{RAS}$ ($\overline{RE}$)	Row Address Strobe
$\overline{CAS}$ ($\overline{CE}$)	Column Address Strobe	$\overline{WRITE}$ ($\overline{W}$)	Read/Write Input
		V_{CC}	Power (5 V)
D_{IN} (D)	Data In	V_{SS}	GND
D_{OUT} (Q)	Data Out	N/C	Not Connected

STANDARD MILITARY PRODUCT FLOWS

TABLE I details the screening and quality conformance inspection procedures for Motorola's standard military flows. Motorola has established two distinct product flows which are designed to meet the following applications:

1. **MOTOROLA JEDEC CLASS B FLOW:** Motorola JEDEC Class B products are offered for use in airborne or ground system applications. JEDEC product is screened and tested per the applicable requirements of MIL-M-38510, MIL-STD-883 including general provision paragraph 1.2 (and subordinate paragraphs), and applicable DESC drawing. Marking shall be in accordance with JEDEC Publication No. 101. Fabrication, screening and testing are not restricted to U.S.A. facilities.
2. **MIL-M-38510 JAN CLASS B FLOW:** JAN Class B products are offered for use in airborne or ground system applications. Fabrication, screening and testing are restricted to DESC certified lines.

CLASS B FLOW(S): The Class B flow has become the "Industry standard flow." This product receives all the 100% screening tests specified by Method 5004, MIL-STD-883. These tests include *visual inspection* to the requirements of Condition B of Method 2010 (and Method 5004 paragraph 3.3), *burn-in*, Condition A, B, C, D or E per Method 1015, for 160 hours at + 125° (or equivalent per Table I or Method 1015), and *static electrical testing at high and low rated temperatures.*

TABLE I

	JEDEC		JAN	
SCREEN	**METHOD**	**REQM'T.**	**METHOD**	**REQM'T.**
Internal Visual (Precap)	2010 Condition B and 38510 1/	100%	2010 Cond. B and 38510 1/	100%
Stabilization Bake	1008 24 hours min. Condition C or equivalent.	100%	1008 24 hours min. Condition C or equivalent.	100%
Temperature Cycling	1010 Condition C	100%	1010 Condition C	100%
Constant Acceleration	2001 Condition E (min.) in Y_1 Plane 2/	100%	2001 Condition E (min.) in Y_1 Plane 2/	100%
Seal Fine & Gross	1014, Conditions B & C	100%	1014, Conditions B & C	100%
Interim Electrical	Per applicable device specification 3/	Optional	JAN slash sheet electrical specification	Optional
Burn-In Test	1015 160 hours @ 125°C or equivalent 4/	100%	1015 160 hours @ 125°C or equivalent 4/	100%
Final Electrical Tests (A) Static Tests (1) 25°C (Subgroup 1, Table 1, 5005) 11/ (2) Max & min rated op temperature (Subgroups 2 & 3, Table 1, 5005) (B) Dynamic Test or Switching Tests 25°C (Subgroup 4 or 9, Table 1, 5005) (C) Functional Test 25°C (Subgroup 7, Table 1, 5005)	Per applicable device specification 3/	100% 100% 100% 100%	JAN slash sheet electrical specifications	100% 100% 100% 100%
Quality Conformance Inspection: Group A (A) Static (1) 25°C (Subgroup 1) (2) Temp. (Subgroup 2 & 3) (B) Dynamic & Switching Tests (1) 25°C (Subgroup 4 or 9) (2) Temp. (Subgroup 5 & 6 or 10 & 11 10/ (C) Functional (1) 25°C (Subgroup 7)	5005 Class B	5/	5005 Class B	5/
Group B	5005 Class B	6/	5005 Class B	6/
Group C	5005 Class B	7/ 9/	5005 Class B	26 wks. prod.
Group D	5005 Class B	8/ 9/	5005 Class B	36 wks. pkg. prod.
External Visual	2009	100%	2009	100%

1/Alternate screens per Paragraph 3.3 of Method 5004, MIL-STD-883 will be used on bipolar digital logic and memory product.
2/For packages with cavity perimeter of >2 inches or a package mass >5 grams, lesser stress levels will be used.
3/See "Test Program" column in the Cross Reference Charts of Sections 3, 4, 5, 6 and Note 2 page 12 of IC Military Handbook (BR149), free upon request from Motorola Literature Center, P.O. Box 20912, Phoenix, AZ 85036.
4/Burn-in time/temperature per Table I of Method 1015, MIL-STD-883. PDA per method 5004, MIL-STD-883.
5/Sample size selection per 12MRM 03627A (sample sizes and acceptance levels are tighter than the requirements of Table I of Method 5005, MIL-STD-883).
6/Each package and lead finish for each week of seal for each assembly location.
7/JAN generic data may be used. If JAN generic data is not available, Group C inspection shall be periodically performed per general provision paragraph 1.2.1 of MIL-STD-883.
8/Group D inspection shall be periodically performed per general provision paragraph 1.2.1 of MIL-STD-883.
9/Endpoint electrical endpoints for Group(s) C and D inspection shall be subgroups 1, 2, & 3 of the applicable device specification.
10/When limits are available per applicable device specification. For SSI Class B devices, tests are performed as a part of Group C. For MSI and greater complexity Class B devices, tests are performed as a part of Group A.
11/Lead Finish "A" applied after completion of subgroup A_1, electrical tests.

MPO Military Products Operations

MILITARY PRODUCT MARKING PROCEDURES.

TABLE II

____ Motorola Case Outline
M/ = Motorola designator for the 75 Mil Multi-Layer Leadless Chip Carrier

____ JEDEC Case Outline
The undesignated package letters are as follows: U = Leadless chip carrier X = DIP Y = Flat Pack Z = All other configurations

____ Lead Finish Table
A — Kovar or Alloy 42, with hot solder dip 1/
B — Kovar or Alloy 42, with fused matte tin plate or non-fused matte tin plate. 2/, 3/
C — Kovar, Alloy 42, or Co-Fired, with gold plate.
X — Any of above, for ordering purposes only.

Case Outline Table
Source: MIL-M-38510F

Letter	Appendix C Designation	Description
A	F-1	14-lead FP (1/4″ x 1/4″)
B	F-3	14-lead FP (3/16″ x 1/4″)
C	D-1	14-lead DIP (1/4″ x 3/4″)
D	F-2	14-lead FP (1/4″ x 3/8″)
E	D-2	16-lead DIP (1/4″ x 7/8″)
F	F-5	16-lead FP (1/4″ x 3/8″)
G	A-1	8-lead can
H	F-4	10-lead FP (1/4″ x 1/4″)
I	A-2	10-lead can
J	D-3	24-lead DIP (1/2″ x 1-1/4″)
K	F-6	24-lead FP (3/8″ x 5/8″)
M	A-3	12-lead can
P	D-4	8-lead DIP (1/4″ x 3/8″)
Q	D-5	40-lead DIP (9/16″ x 2-1/16″)
R	D-8	20-lead DIP (1/4″ x 1-1/16″)
S	F-9	20-lead FP (1/4″ x 1/2″)
V	D-6	18-lead DIP (1/4″ x 15/16″)
W	D-7	22-lead DIP (3/8″ x 1-1/8″)
2	C-2	20-Terminal SQ. CCP (.350″ x .350″)
3	C-4	28-Terminal SQ. CCP (.450″ x .450″)

How to order
MIL-M-38510 JAN-Qualified Product

J	M38510	/001	04	B	C	A
INDICATES A QUALIFIED DEVICE	MILITARY DESIGNATOR	DETAIL SPECIFICATION NUMBER	DEVICE TYPE WITHIN DETAIL SPECIFICATION	CLASS B OR C (SEE DEVICE CLASS TABLE)	CASE OUTLINE (SEE CASE OUTLINE TABLE)	LEAD FINISH (SEE LEAD FINISH TABLE)

How to order MIL-STD-883 JEDEC Product		54LS00	/B	C	A	JC
		MOTOROLA DEVICE TYPE (WITHOUT LETTER PREFIX)	CLASS B OR C (SEE DEVICE CLASS TABLE)	CASE OUTLINE (SEE CASE OUTLINE TABLE)	LEAD FINISH (SEE LEAD FINISH TABLE)	JEDEC DESIGNATOR PER JEDEC PUBLICATION #101

	54F04	M	/B	2	C	JC
How to order 75 Mil Multi-Layer Leadless Chip Carrier	MOTOROLA DEVICE TYPE	CASE OUTLINE (SEE MOTOROLA CASE OUTLINE)	CLASS B OR S (SEE DEVICE CASE TABLE:	CASE OUTLINE (SEE JEDEC CASE OUTLINE)	LEAD FINISH (SEE LEAD FINISH TABLE)	JEDEC DESIGNATOR PER JEDEC PUBLICATION #101

1/The criteria for Linear MPO Metal Can products shall be as follows:
In all cases for flush mounted devices, the solder dip shall extend to 20 mils maximum or one lead width maximum, whichever is greater, from the seating plane or the glass seal of the package.

2/Motorola standard lead finish for JAN product is as follows:
All Cerdip: Fused matte tin (Lead Finish B), conversion is planned for lead finish "A" in third quarter 1985.
All Flat-Pack: Hot solder dip (Lead Finish A)
All LCCC: Gold (Lead Finish C)

3/Motorola standard lead finish for JEDEC product is as follows:
All Cerdip: Hot solder dip (Lead Finish A).
All Flat-Pack: Currently non-fused matte tin (Lead Finish B).
Conversion to Lead Finish A is planned by the end of the third quarter 1985.
All LCCC: Gold (Lead Finish C).
TO-66: Gold (Lead Finish C) or Hot solder dip (Lead Finish A).
All other cans: Hot solder dip (Lead Finish A).

STANDARD MILITARY PRODUCT MARKING

MINIMUM MARKING REQUIREMENT: All Motorola standard military product receives the following marking:

1. Motorola Symbol (logo): Example — Ⓜ
2. Seal Date Code (per MIL-M-38510): Example — 8511
3. ESD Identifier, Equilateral Triangle: Example — △
4. Device Part Number: Example — as shown in Table II
5. Index Point (defines starting point for numbering leads and/or mechanical orientation and shall consist of either a pin 1 dot, package notch or a dog-leg or pin 1 terminal).
6. Motorola's manufacturer's designating symbol CGG per NAV-SHIPS 0967-190-4010.
7. If package material contains beryllium oxide, the part is marked with the designator "BeO".

ADDITIONAL MARKING:

JEDEC product also receives the following marking:

a. Multiple part numbers (when applicable) as defined below:
   - — MOTOROLA JEDEC part number
   - — DESC DRAWING part number (if applicable).

b. Country of Origin (marked on backside of CERDIP, CERFLAT, and LCCC package types and on the side or bottom of "Metal Can" packages).

   NOTE: A unique prefix code may be added to the Inspection Lot Identification Code (seal date) which identifies the country of origin for both assembly and test. See table below.

c. "883" MIL-STD-883 General Provisions paragraph 1.2.1 compliance marking.

LOCATOR CODES FOR ASSEMBLY OR TEST

D — Austin, TX
I — Anam, Korea (Contractor)
K — Seoul, Korea (MKL)
L — Hong Kong
M — Mesa, AZ
Q — Kuala Lumpur, Malaysia (KLM)

R — Seremban, Malaysia
T — France
W — Guadalajara, Mexico
Y — Tempe, AZ
Z — Scotland

The prefix letter closest to the date code is the Test Location Code. The letter to the left of the Test Location Code is the Assembly Location Code.

Example:

K Y 85XX B
— Lot Designator
— Seal Date Code
— Test Location — Tempe, Arizona
— Assembly Location — Seoul, Korea

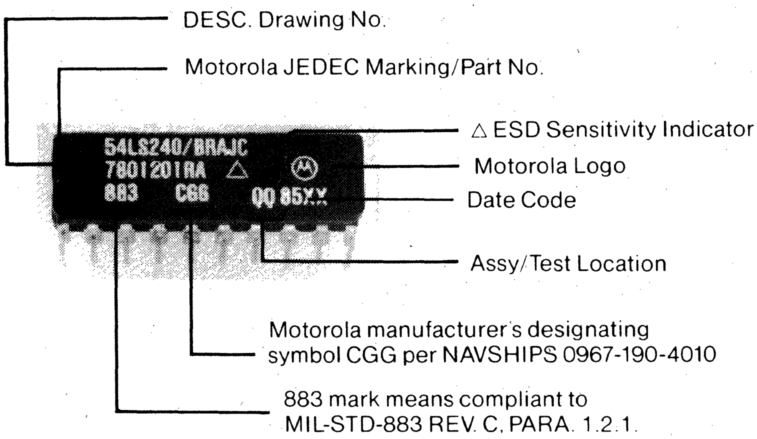
DESC. Drawing No.
Motorola JEDEC Marking/Part No.
54LS240/BRAJC
7801201RA △ Ⓜ
883 CGG QQ 85XX
△ ESD Sensitivity Indicator
Motorola Logo
Date Code
Assy/Test Location
Motorola manufacturer's designating symbol CGG per NAVSHIPS 0967-190-4010
883 mark means compliant to MIL-STD-883 REV. C, PARA. 1.2.1.

Commercial Product Processing Levels

The "Better" Program

Motorola's reliability enchancement program was developed to provide improved levels of reliability for standard commercial products.

THE "BETTER" program is offered on MOS, Linear, ECL, TTL, LS-TTL, DTL and HTL in dual-in-line ceramic and plastic packages.

Motorola standard commercial integrated circuits are manufactured under stringent in-process controls and quality inspections combined with the industry's finest outgoing quality inspections. The "BETTER" program offers three levels of extra processing, each tailored to meet different user needs at nominal costs.

The program is designed to:

- Eliminate incoming electrical inspection
- Eliminate need for independent test labs and associated extra time and costs
- Reduce field failures
- Reduce service calls
- Reduce equipment downtime
- Reduce board and system rework
- Reduce infant mortality
- Save time and money
- Increase end-customer satisfaction

BETTER PROCESSING - STANDARD PRODUCT PLUS:

100% SCREEN	LEVEL I "S"	LEVEL II "D"	LEVEL III "DS"
TEMP CYCLE, 10 CYCLES -65°C to +150°C	X		X
BURN-IN —		X	X
POST BURN-IN ELECTRICAL[2]		X	X
100°C FUNCTIONAL [1]	X		X
DC PARAMETRIC AT 25°C [1&2]	X	X	X

1. ECL and TTL/LS do functional and dc 100% at T_A Max (Levels I and III, 25°C or T_A Max optional for Level II.)
2. NMOS does Functional and dc 100% at 100°C.

"BETTER" AQL GUARANTEES

TEST	CONDITION	AQL*		
		LEVEL I	LEVEL II	LEVEL III
HIGH TEMPERATURE FUNCTIONAL	T_A = 100°C or T_A Max	.021		.021
DC PARAMETRIC	T_A = 25°C	.021	.021	.021
DC PARAMETRIC	T_A Min, TA MAX	.044	.044	.044
AC PARAMETRIC	T_A = 25°C	.044	.044	.044
DYNAMIC TEST (LINEAR AND NMOS)	T_A = 25°C	.044	.044	.044
EXTERNAL VISUAL AND MECHANICAL	MAJOR/MINOR	.065	.065	.065
HERMETICITY (NOT APPLICABLE TO PLASTIC PACKAGES)	GROSS/FINE	.15	.15	.15

"AQL" values shown are for reference only. "LTPD" type sampling plans that are equal to or tighter than values indicated may be used. Also, the guaranteed electrical and visual/mechanical AQL levels have been progressively tightened. Contact your nearest Motorola sales office for current values.

HOW TO ORDER

MC14001B — **Part Identification**

CP — **Standard Package Suffix**

S — **BETTER PROCESSING**
LEVEL I = SUFFIX S
LEVEL II = SUFFIX D
LEVEL III = SUFFIX DS

PART MARKING

The Standard Motorola part number with the corresponding "BETTER" suffix can be ordered from your local authorized Motorola distributor or Motorola sales offices. "BETTER" pricing will be quoted as an adder to standard commercial product price.

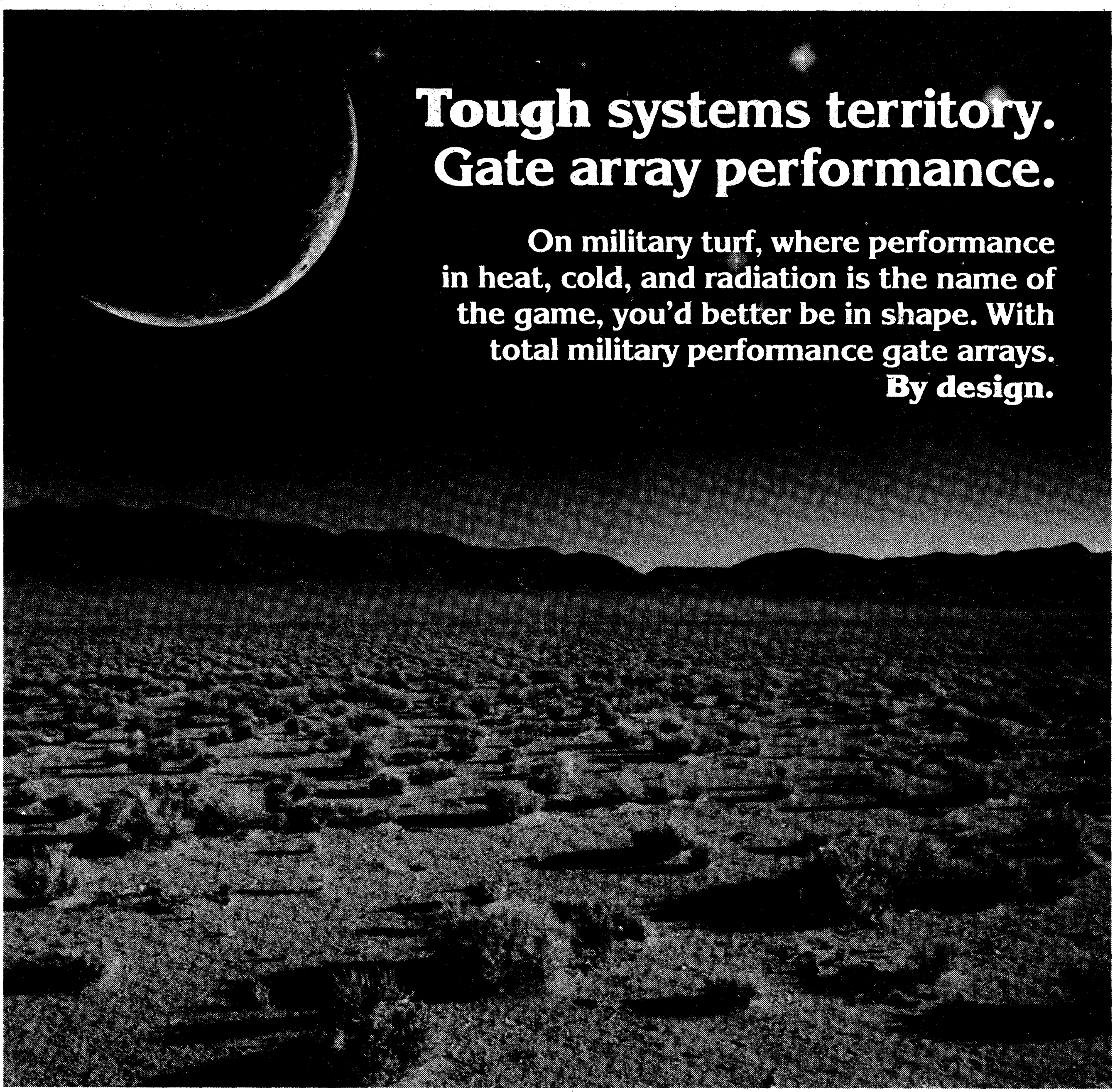
Tough systems territory.
Gate array performance.
On military turf, where performance in heat, cold, and radiation is the name of the game, you'd better be in shape. With total military performance gate arrays.
By design.

☐ **Raytheon Semiconductor Division designs for military performance:** Refined bipolar technology designed from scratch expressly for high speed, low power and radiation tolerance over the full military operating temperature range. Double the speed and half the power of LS. Documented radiation hardness.

☐ **Service and support:** Complete in-house integration of design and manufacturing. Fully automated CAD (including conversion from logic simulation to placement and routing, linkage between logic simulator and tester).

☐ **Credentials:** Trident II, Milstar, F-111, F-15, F-16, F-18, B-1, SICBM, JTIDS, AIM-7M, Patriot, ALQ 135 and other programs.

☐ **Advanced technology:** Five array densities from 800 to 2400 gates. Efficient Integrated Schottky Logic (ISL) bipolar technology. 2.3nS, 350μW (typ) gate performance . . . for 0.8pJ speed-power product. Selective enhancement to 1.8nS.

☐ **Call Raytheon Semiconductor Division:** Specifications, application notes, technical and cost proposal for your application. **415/966-7716.**

Raytheon

The Latest Word in Gate Arrays:

Microtachyanorexilogopraxis

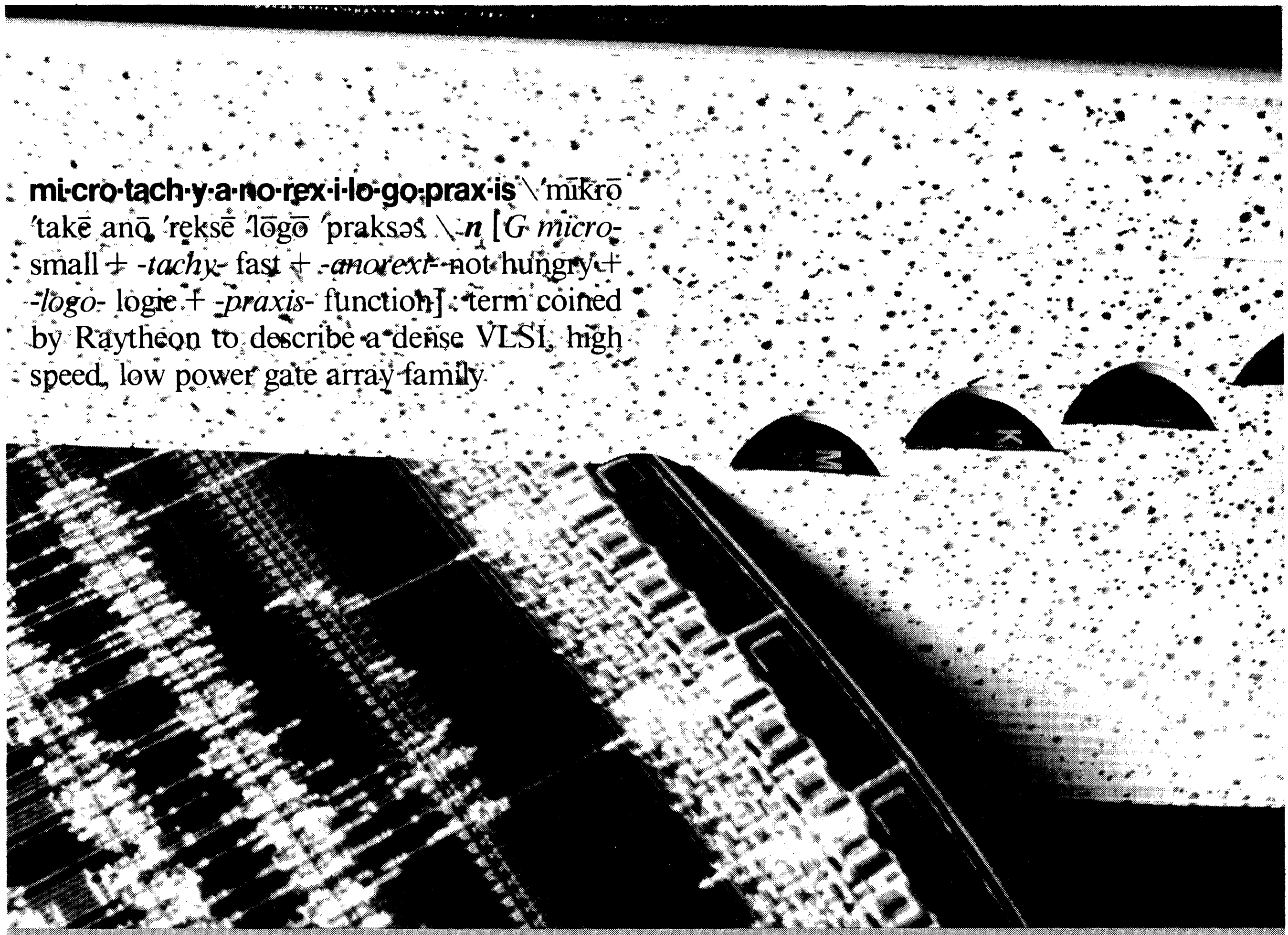

mi·cro·tach·y·a·no·rex·i·lo·go·prax·is \ˈmīkrō ˈtakē anō ˈreksē ˈlōgō ˈpraksəs \ *n* [*G micro-* small + *-tachy-* fast + *-anorexi-* not hungry + *-logo-* logic + *-praxis-* function] : term coined by Raytheon to describe a dense VLSI, high speed, low power gate array family

And a few words of explanation.

Raytheon introduces a family of advanced Oxide-Isolated bipolar gate arrays combining density, high speed, low power consumption, and Integrated Schottky Logic. The 5,040 gate, 150 I/O, CGA 50L15. The 3,584 gate, 124 I/O, CGA 35L12.

☐ **High performance:** 1.2nS, 160μW (typical) gate performance for <0.2pJ speed-power product. Selective enhancement to 1.0nS. (Runs twice as fast as CMOS, without severe loading degradation. And total chip dissipation <1.5W at top speed.) Full military performance, radiation hardness.

☐ **Flexible service and support:** complete integration of design and manufacturing eliminates gate array anxieties. Fully automated CAD (including conversion from logic simulation to placement and routing, linkage between logic simulator and tester). Flexible customer interface points, program manager support.

You have our words on bipolar gate arrays, redefined. We'd like to get the word on your application.

Raytheon Company
Semiconductor Division
350 Ellis Street
Mountain View, CA 94039-7016
(415) 966-7716

Access to the right technology

Raytheon

High-Reliability Products

High-Reliability IC Capability

RCA Solid State is a leading supplier of high-reliability integrated circuits to the military and aerospace community. Years of commitment, dedication, experience, and know-how make possible shipment of hundreds of thousands of quality high-reliability microcircuits annually.

RCA specialists fully understand the needs of component and systems engineers in the design of high-reliability equipment, are thoroughly familiar with the objective and requirements of MIL-STD-883 and MIL-M-38510, and work closely with governmental agencies in the establishment of detailed specifications for high-reliability microcircuits. Moreover, RCA provides complete facilities for processing and testing integrated circuits to these specifications. RCA is justly proud of its many significant accomplishments with respect to the development, production, and shipment of high-reliability integrated circuits, including:

- First supplier of MIL-M-38510 to attain QPL Class S Part One Radiation-Hardness Listing
- First supplier of MIL-M-38510 CMOS integrated circuits
- Leader in the production of radiation-resistant CMOS microcircuits [to JAN 1×10^5 rad (Si) and 1×10^6 rad (Si)]
- Initiator of scanning-electron-microscope (SEM) inspections in the production of high-reliability microcircuits — in use at RCA since 1972
- Initiator of MIL-STD-883, Condition A inspections — in use at RCA since 1972

Reliability Classes

The term *high reliability* as applied to integrated circuits covers a broad spectrum of reliability classes. These classes were originally defined by device manufacturers based on test methods described in MIL-STD-883, a compendium of quality and conformance tests, and later were standardized by the government. MIL-STD-883 establishes uniform methods and procedures for testing microcircuits including basic environmental tests to determine resistance to deleterious effects of natural elements and conditions surrounding military and space operations and physical and electrical tests.

Today, there are both in-house and government-defined reliability classes. The contents of the in-house programs vary with the manufacturer. The government program, referred to as JAN M38510, consists of a General Specification and a Device (detailed) Specification. The General Specification, MIL-M-38510, establishes the general requirements for microcircuits and the quality and reliability assurance requirements that must be met in the procurement of JAN microcircuits. The Device (detailed) Specification establishes the detailed test requirements and inspections and any specific characteristics unique to the particular device. The General Specification applies to all technologies, such as TTL, ECL, Linear, and CMOS; the Device (detailed) Specification delineates the requirements for a circuit function within a device technology.

Standard-Product High-Reliability IC's

RCA offers high-reliability versions of virtually its entire line of standard-product integrated circuits from the CD4000 series of CMOS digital logic types, the CD54HC and CD54HCT high-speed CMOS types, the CDP1800 series of microprocessor and associated memory and input/output (I/O) types, and the CA3000 series of bipolar linear types. These integrated circuits are processed and screened to Class B requirements.

RCA also offers high-reliability versions of standard-product types that are processed and screened to special customized specifications, especially for the aerospace user and others who procure types to Class S specifications.

RCA maintains an extensive computer file of customer specifications and has the methodology required to translate these customized specifications into internal RCA standards and factory operating procedures. In addition to the detailed device specifications, the computer file lists the customer specification number, any revision number, and the RCA custom number assigned to a specific device type.

High-Reliability Custom and Semicustom IC's

RCA has complete custom- and semi custom-circuit capabilities for various CMOS and bipolar integrated-circuit technologies. Custom circuits are offered whenever this approach to integrated-circuit design is determined to be economically feasible. RCA high-reliability custom integrated circuits can be processed and screened to Class S or Class B specifications. These custom circuits, which are described in detail in later sections of this booklet include:

- EPIC 8-bit slice microcomputer family and associated memory (RAM) complement
- Semi-custom products —
  Automated gate arrays
  Automated standard cells (PaCMOS®)

Radiation-Hardened High-Reliability IC's

RCA also offers radiation-hardened versions of high-reliability (Class S and Class MS) CD4000-series CMOS integrated circuits. Radiation-hardened types, which are identified by addition of an "R" or "H" suffix to the device type number, are electrically and mechanically identical to their prototype with the exception that they are processed and screened to withstand a total gamma-radiation dosage of 10^5 rads(Si) for R-suffix types or 10^6 rads(Si) for H-suffix types. RCA also offers a broad line of radiation-hardened integrated circuits that utilize CMOS/SOS technology and provide exceptional tolerance for withstanding transient radiation, total-dose radiation, and single-event-upset (SEU). The device complement includes the EPIC 8-bit-slice microcomputer chip-set family, which contains an 8-bit slice, RAMs, ROMs, controllers, and semicustom gate arrays for customizing computer architecture or emulating existing software. Rad-hard RAMs are available for stand-alone memory systems. These devices are screened to military Class S-type specifications.

® Reg. U.S. Patent & Tm. Off.

High-Reliability Products

JAN M38510 CD4000-Series CMOS ICs

The purpose of the JAN M38510 program is to achieve standardization among integrated-circuit suppliers and to assure delivery of devices whose long-term life will satisfy the requirements of the system for which they were intended.

Two reliability classes — S and B — are described in MIL-M-38510; the screening classes are performed according to MIL-STD-883, method 5004. Class S devices are of the highest reliability level and are intended for critical applications where replacement of components is not practical.

The Qualification and Quality Conformance Inspection tests delineated in MIL-STD-883 Method 5005 consist of:

Groups A and B — device electrical and mechanical construction evaluation tests respectively.

Groups C and D — accelerated stress tests that subject devices to stress levels greater than those normally experienced in a typical application.

Group A consists of electrical tests defined by the Device specification. (MIL-STD-883 Method 5005)

Group B (Class B) consists of Package and Internal Mechanical Strength tests. (MIL-STD-883 Method 5005)

Group B (Class S) consists of Package and Internal Mechanical Strength and Long-Term Reliability tests. (MIL-STD-883 Method 5005)

Group C (Class B only) consists of Chip-Related Long-Term Reliability tests. (MIL-STD-883 Method 5005)

Group D consists of Package and Construction Environmental tests. (MIL-STD-883 Method 5005)

Group E Radiation Hardness Verification Testing. (MIL-STD-883 Method 5005)

Qualification Inspection Tests (QI) are those tests defined by MIL-M-38510 as required for initial qualification of a device or package type to a given reliability class. Quality Conformance Inspection (QCI) Tests are those tests defined by MIL-M-38510 to evaluate production line quality of qualified devices. QCI tests are an on-going inspection process performed at periodic intervals defined by MIL-M-38510. QCI testing is the foundation of statistical process evaluation. Electrical end-point test limits are defined by MIL-M-38510 and are more demanding of CMOS than of TTL in areas of quiescent current and input leakage current. DC and AC parameters are measured at -55°C, +25°C and +125°C.

CD4000B Slash-Series CMOS High-Voltage ICs

The RCA high-reliability CD4000B series of high-voltage CMOS integrated circuits consists of a broad range of SSI, MSI-1, and MSI-2 (LSI) functions from simple gates to complex counters, registers, and arithmetic circuits. Specific design features for CMOS devices and the performance advantages of CMOS technology — low power consumption, high noise immunity, high speed, high fanout, TTL and DTL logic compatibility, excellent temperature stability, and fully protected inputs and outputs —provide the logic system designer with a capability to achieve outstanding performance, high reliability, and simplified circuitry in a wide variety of equipment designs.

Features

- 100% tested for quiescent current at 20V
- Maximum input current (leakage) of $1\mu A$ at 18 V over full package-temperature range; 100 nA at 18 V at 25°C
- Standardized symmetrical output characteristics
- 5-V, 10-V, and 15-V parametric ratings
- Noise margin (over full package-temperature range): 1 V at V_{DD} = 5 V, 2 V at V_{DD} =10 V, 2.5 V at V_{DD} = 15 V
- Meets all requirements of JEDEC Standard No. 13B, "Standard Specifications for description of 'B' Series CMOS Devices"

CA3000 Slash-Series Linear ICs and MOSFETs

RCA-CAXXXX "Slash" (/) Series types are high-reliability linear integrated circuits intended for applications in aerospace, military, and industrial equipment. These devices are electrically and mechanically identical to the standard types described in commercial databook SSD-240B entitled "Linear Integrated Circuits and MOS/FET's", but are specially processed and tested to meet the electrical, mechanical, and environmental test methods and procedures established for microcircuit devices.

RCA CA3000 slash/series types are supplied to three screening levels (/1, /3, and /3W) that meet the electrical, mechanical, and environmental test methods and procedures established for microelectronics in MIL-STD-883.

Radiation Effects on Linear ICs

There is no dedicated process for radiation hardening of the Linear ICs. Gammacell exposure of various devices representing both the bipolar and BiMOS wafer technologies has resulted in information useful for design guidance when considering radiation hardness.

Devices processed under bipolar technologies tend to withstand Gamma radiation to exposure levels of 1 x 10^5 rads(Si) prior to experiencing significant parameter degradation, while those processed with BiMOS techniques can withstand Gamma Ray exposure levels up to 1 x 10^4 rads(Si) before parameter degradation takes place. RCA does not guarantee rad-hard levels for linear IC's but will conduct rad-hard testing on a custom basis.

JAN CD4000-Series CMOS ICs

Index to RCA JAN Qualified-Parts Listing and MIL-M-38510 Detail Specifications (Slash Sheets) as of January 1985.

Detail Specification	RCA Type	Available JAN Devices		
		S	B	1 x 10^5 Rad Si
MIL-M-38510/5001	CD4011A	A	A	
02	CD4012A		A	
03	CD4023A		A	
51	CD4011B	A	A	A
52	CD4012B	A	A	A
53	CD4023B	A	A	A
MIL-M-38510/5101	CD4013A	A	A	
02	CD4027A		A	
03	CD4043A			
51	CD4013B	A	A	A
52	CD4027B	I	I	I
53	CD4043B			
MIL-M-38510/5201	CD4000A		A	
02	CD4001A		A	
03	CD4002A	A	A	A
04	CD4025A		A	
51	CD4000B			
52	CD4001B	A	A	A
53	CD4002B	A	A	A
54	CD4025B	I	I	I
MIL-M-38510/5301	CD4007A		A	
02	CD4019A		A	
03	CD4030A			
04	CD4048A			
51	CD4007UB	I	I	I
52	CD4019B	I	I	I
53	CD4030B	I	A	A
54	CD4048B			
MIL-M-38510/5401	CD4008A			
51	CD4008B	P	P	P
MIL-M-38510/5501	CD4009A			
02	CD4010A			
03	CD4049A	A	A	A
04	CD4050A	A	A	A
05	CD4041A			
51	CD4009UB			
52	CD4010B			
53	CD4049UB	A	A	A
54	CD4050B	A	A	A
55	CD4041UB	I	I	I
MIL-M-38510/5601	CD4017A		A	
02	CD4018A		A	
03	CD4020A		A	
04	CD4022A		A	
05	CD4024A		A	
51	CD4017B	A	A	A
52	CD4018B	I	I	I
53	CD4020B	A	A	A
54	CD4022B	I	I	I
55	CD4024B	I	I	I
MIL-M-38510/5701	CD4006A		A	
02	CD4014A		A	
03	CD4015A		A	
04	CD4021A		A	
05	CD4031A		A	
06	CD4034A			
51	CD4006B			
52	CD4014B	I	I	I
53	CD4015B	P	P	P
54	CD4021B	I	I	I
55	CD4031B			
56	CD4034B			
MIL-M-38510/5801	CD4016A			
02	CD4066A			
51	CD4016B			
52	CD4066B	I	I	I
MIL-M-38510/5901	CD4028A			
51	CD4028B	P	P	P
MIL-M-38510/17001	CD4081B	A	A	A
02	CD4082B	A	A	A
03	CD4073B	A	A	A
MIL-M-38510/17101	CD4071B	A	A	A
02	CD4072B	A	A	A
03	CD4075B	A	A	A
MIL-M-38510/17201	CD4085B	A	A	A
02	CD4086B	A	A	A
03	CD4070B	A	A	A
04	CD4077B	A	A	A
MIL-M-38510/17301	CD4514B			
02	CD4515B			
03	CD4532B			
04	CD4555B			
05	CD4556B			
MIL-M-38510/17401	CD4069UB	A	A	A
02	CD40107B			
03	CD4502B	A	A	A
04	CD40109B			
MIL-M-38510/17501	CD4076B			
02	CD4095B			
03	CD4096B			
04	CD4098B	A	A	A
05	CD40174B			
MIL-M-38510/17601	CD4099B	A	A	A
02	CD4508B			
MIL-M-38510/17701	CD4093B			
02	CD40106B			
MIL-M-38510/17801	CD4067B			
02	CD4097B			
03	CD40257B			

A = available P = proposed qual. I = in process 1985 (MIL-M-38510 detailed electrical test programs are available.)

For current availability, call your RCA authorized distributor or nearest sales office.

High-Reliability Products

QMOS 54HC/HCT Slash-Series CMOS ICs

The RCA QMOS 54HC/HCT series of high-speed CMOS logical integrated circuits include an extensive line of products that are pin compatible with many existing bipolar 54LSTTL and CMOS 4000 series of digital logic types. The new 54HC/HCT IC's provide high-speed CMOS replacements for the most popular LSTTL devices in existing designs and also offer low-power all-CMOS designs for new digital systems. Key family features of the RCA 54HC/HCT types include:

- Speeds equivalent to LSTTL types with typical gate delays of 10 ns.
- Fanout to 10 54-LSTTL loads; 15 loads using Bus Driver 54 types.
- Operating frequencies equivalent to LSTTL types, typically 30 MHz.
- The high-voltage noise-immunity characteristic of CMOS, typically 45 percent of V_{CC}, a two to three times improvement over LSTTL.
- Wide range of power supply operating voltages, 2 to 6 volts.
- CMOS low static power consumption, typically less than 1 microwatt.

With the broad line of CMOS MSI-function types currently available, together with performance offered by the RCA 54HC/HCT series of high-speed CMOS integrated circuits, the designer need not sacrifice speed for power consumption. Add the other classical advantages of CMOS, including high noise immunity and wide power-supply and temperature ranges, and the decision to use high-speed CMOS logic is the choice for the 80's. This new family provides for the design of more cost-effective systems to serve high-speed market applications.

The RCA 54HC/HCT high-reliability product line consists primarily of CD54HC-series types, which feature CMOS input-voltage-level compatibility, and CD54HCT-series types, which are input-voltage-level compatible with LSTTL devices. The 54HC/HCT high-reliability line also includes a limited number of single-stage, unbuffered inverter types (CD54HCU-series) for added versatility in oscillator and amplifier applications.

8-Bit CMOS Slash-Series LSI ICs

The RCA 1800 series is ideally suited for military applications such as mobile ground equipment that must be battery operated and exposed to harsh environments. Use of a highly-reliable, all CMOS LSI technology provides low power operation throughout the military temperature range.

The 'Slash 3' suffix following the type designation indicates that the devices are screened to military specifications as described in the screening sequence.

Features:

- Low power consumption
- Fully static
- Single power supply
- Full temperature range
- High noise immunity
- Complete family which includes RAMs, ROMs, and I/Os
- Leadless-chip-carrier packaging option for selected types
- Full CMOS CDP1802A microprocessor

Custom/Semicustom Slash-Series Devices

RCA has developed an extensive and rapidly growing custom and semicustom circuit capability. Most of these devices can be screened to RCA /3 criteria. These include devices fabricated using gate-array and standard-cell (RCA PaCMOS®) design techniques in a variety of CMOS technologies. A variety of packaging is available.

Special radiation-hardened semicustom circuits can be fabricated using the RCA radiation-hardening CMOS silicon-on-sapphire technology. These devices can be screened up to the RCA /1R criteria for space applications.

RCA has high-reliability capabilities in:

- Gate Arrays (Automated)
  - PA40000 (3µ Bulk Si Gate CMOS)
  - PA60000 (4µ Si gate rad-hard CMOS/SOS)
- PaCMOS standard-cell families
  - CMOS/SOS (4µ and 3µ)
  - CMOS II (3µ)

WHAT'S NEW IN IC MASTER

DON'T MISS THE NEW SURFACE MOUNT DEVICE IC SECTION

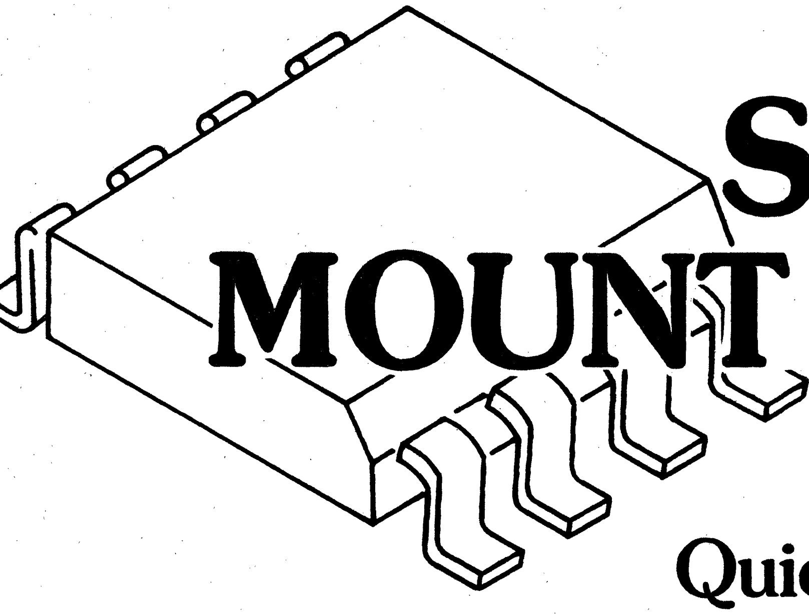

Quickly shows you by base number and package, what surface mount devices are available and from which manufacturers.

Volume II, Page 5201

Overview

Texas Instruments Military program offers high reliability integrated circuits covering a complete product spectrum. The program is designed to meet and support Military processing requirements. Standard device offerings include JM38510 (JANB), DESC Selected Item Drawing, Class B Processing, and the Military Temperature Range.

Product Line	Processing Flows	Types
Logic	SN, SNJ, JANB	54TTL 54S 54LS 54ALS 54AS 54HC 54HCT
	B	PAL®
Linear	SN, SNJ, JANB, B	Interface, Control
MOS Memory	SMJ	EPROM, DRAM, SRAM
Bipolar Memory	JBP, SNJ	PROM, RAM
Microprocessor	SMJ	32010
	N	9989

® PAL is a registered trademark of Monolithic Memories, Inc.

Military Product Flows

Process Level	Order As	Description
JM38510 Class B	JANB	Qualified per MIL-M-38510 Class B. Produced in DESC certified production facilities.
DESC	SNJ, SMJ	Certified and symbolized to the DESC Selected Item Drawing where TI is an approved source.
Class B	SNJ, JBP, SMJ, B	Screened per requirements of MIL-Std-883 Class B Method 5004 & 5005. Conforms to the requirements of JEDEC Publication 101A. (For detailed screening information, see Military Products Designers' Reference Guide.
Military Temperature Range	SN54, SN55	Standard Commercial Processing

Packages Available

Package Description	Package Type	Logic	Linear	Bipolar Memory	MOS Memory	µP
Ceramic DIP	J	ALL	X	X	X	X
	JG		X			
	JT	ALS, AS, HC, HCT, LS		X		
Side Braze Ceramic DIP	JD				X	X
Ceramic Flatpack	W	TTL, S, LS	X			
	WC		X			
	U		X			
Ceramic Chip Carrier (Square)	FK	ALS, AS, HC, HCT, LS, S	X			
	FD		X			
Ceramic Chip Carrier (Rect)	FG				X	

DESC Selected Item Drawings

The DESC selected item drawing program provides industry standard specifications in compliance with MIL-Std-883, Class B requirements for devices that are not JAN qualified. Texas Instruments fully supports the DESC selected item drawing program. Contact the factory for 1986 DESC approval plans. The DESC selected item drawing nomenclature is described below.

82005 01 X X

DRAWING NUMBER

DEVICE TYPE

PACKAGE TYPE

C = 14 Pin DIP
D = 14 Pin Flatpack
E = 16 Pin DIP
F = 16 Pin Flatpack
L = 24 Pin DIP (300 MIL)
P = 8 Pin DIP
R = 20 Pin DIP
S = 20 Pin Flatpack
2 = 20 Pad LCCC
3 = 28 Pad LCCC

LEAD FINISH

A = Solder DIP
B = Tin Plate
C = Gold Plate

Logic

Digital Logic Nomenclature

EXAMPLE: SNJ 54 LS00 J

PREFIX

SN = Mil Temp Range
SNJ = Class B Processing
JANB = JM38510 Qualified

MIL TEMPERATURE
(−55°C/125°C)

CIRCUIT DESIGNATOR

Blank = Standard TTL
LS = Low Power Schottky
S = Schottky
ALS = Advanced Low Power Schottky
AS = Advanced Schottky
HC = High-speed CMOS
HCT = TTL compatible HC

PACKAGE

J = CDIP
JT = 24 pin, 300 mil CDIP
FK = LCCC
W = Flatpack

High Speed CMOS

Texas Instruments Military High-Speed CMOS logic family offers a broad range of functions, from gates to complex functions. TI's new generation of CMOS (High-Speed CMOS or HC) uses a 3 μm, self-aligned poly-silicon gate CMOS process. The net results of this process are higher gate densities, lower power consumption and an improvement in switching speeds.

Designed as a low power replacement family for Low Power Schottky TTL, 80 percent of the defined HCMOS functions are pin-out compatible with equivalent TTL functions while 10 percent are pin-out compatible with Series 4000 CMOS functions. The remaining 10 percent are newly defined HCMOS functions.

Two versions of High-Speed CMOS are available, HC and HCT. The HC series contains approximately 80 percent of the defined CMOS functions and is primarily intended for new designs. The HCT series consists of TTL-threshold compatible devices and was designed as a pin for pin replacement for LSTTL. The HCT series is primarily used in retrofit, intermixed with TTL in a system and bus interfacing.

HCMOS Speed/Power

The HCMOS family operates at speeds comparable with Low Power Schottky and with a 12 X improvement over Series 4000 CMOS. In terms of power consumption, HCMOS is frequency dependent whereas LS is flat to approximately 1 MHz. Beyond 1 MHz the power consumption of LS also becomes frequency dependent. Therefore, HCMOS consumes less power on a device type basis as shown in Figure 1. HCMOS offers a 14 X improvement over LSTTL in the speed/power product area. This gives designers a tremendous advantage in system power savings while maintaining the same performance level of Low Power Schottky. In addition, this power savings makes battery and battery back-up operation possible for many applications.

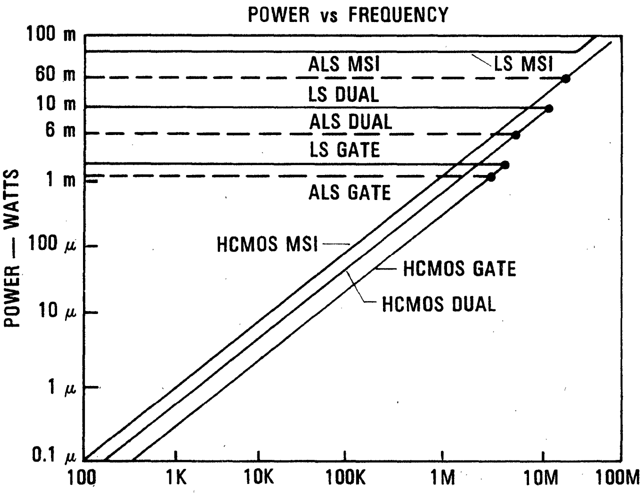

Figure 1

For gates and duals, HCMOS devices offer lower power consumption than LS devices up to approximately 3 and 9 MHz respectively and up to approximately 2.5 and 5 MHz for ALS devices. For MSI devices, fmax as opposed to power consumption becomes the limiting factor.

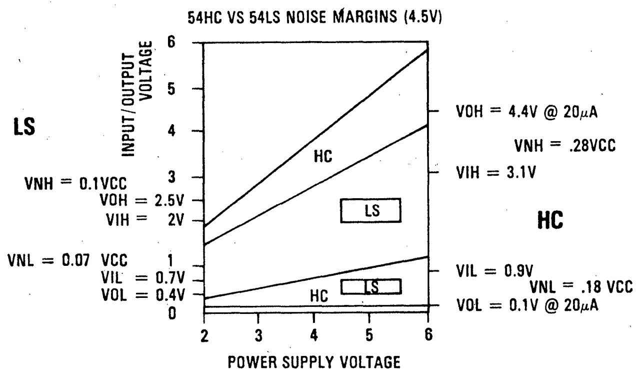

Figure 2

The noise immunity of Low Power Schottky devices is 10% (V_{NH}) and 7% (V_{NL}) of the minimum supply voltage (4.5V). HCMOS parts increase the noise margin to 28% and 18% respectively (at V_{CC} = 4.5V).

Superior Noise Immunity

Improved noise immunity is another advantage of HCMOS. Figure 2 shows that HCMOS provides greater noise immunity than LSTTL. The HCMOS noise immunity is 2.5 times that of Low Power Schottky TTL at 4.5 Volts. As a result, the HCMOS family is ideal for use in noisy environments.

High Speed CMOS

Power Supply Requirements

HCMOS also offers less stringent power supply requirements than LSTTL. As shown in Figure 3, HCMOS operates over the entire range of 2 Volts to 6 Volts, compared to 4.5 Volts to 5.5 Volts for Low Power Schottky. All DC and AC parameters are guaranteed over temperature extremes and are specified at 2.0, 4.5, and 6.0 Volts. As a result, power supply requirements are less demanding in terms of both output voltage and regulation. The AC and DC parameters are tested at worst case condition only (4.5 Volts for AC and 4.5/5.5V for DC). AC parameters are specified at 50 pF loads (150 pF for buffers).

Improved ESD Protection

TI's HCMOS family has been designed with superior protection against ESD. The ESD input protection circuitry, as illustrated in Figure 4, uses a combination of P+ and N+ diode clamps to the supply rails and a series N+ resistor for input gate protection. The outputs are protected by the P+ and N+ drain diodes of the output transistors and an additional P+ diode clamped to V_{CC} as illustrated in Figure 5. Protection typically exceeds 4000 Volts on inputs and 3000 Volts on outputs, and is guaranteed to 2000 Volts.

Improved Reliability

TI's HCMOS also offers an improvement in reliability not only through its superior ESD and latch-up protection, but also due to the low junction and operating temperatures inherent to HCMOS. Accelerated life tests show an improvement in the failure rate of TI's HCMOS over LSTTL, .00059% per 1,000 hours for HCMOS versus .0008% for LSTTL. For details, see the High-Speed CMOS Logic Quality and Reliability Brochure.

Design Considerations For HCMOS

The ESD protection structures on the inputs and outputs of all HCMOS devices must be considered under certain applications such as systems with multiple power supplies, and systems with partial power down.

In systems with multiple power supplies, if the power supplies ($V_{CC}1$ and $V_{CC}2$, Figure 6) differ by more than a Vbe (0.7 V), the ESD protection diodes will become forward biased. In addition, in systems where one device attempts to drive another device which is powered down, inputs/outputs can be protected by placing a diode between the device with an active power supply and the inactive device as shown in Figure 7. In the case of an unpowered driver or transceiver with an active bus, to prevent biasing of the ESD protection circuitry, a diode and capacitor may be used to isolate the package connected to the bus as detailed in Figure 8.

During the transition from one logic state to the other, there is an interval when both the PMOS and NMOS transistors are on causing a current spike on the V_{CC} and Ground leads. This spike may have a di/dt as high as 5000A/s causing voltage transients on V_{CC} and Ground. It is recommended by TI that a decoupling capacitor be placed across the V_{CC} and Ground leads within at least 2.5 inches from each package to reduce the effects of the spikes. Figure 9 is a graph of V_{CC} transients versus decoupling capacitor distance from the package. Figure 10 shows a test circuit for decoupling effects.

Figure 3

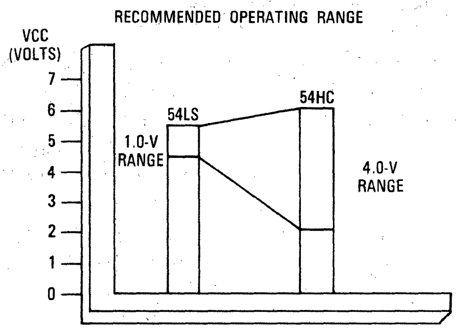

Power-supply requirements are far less stringent for HCMOS devices, making them ideal for use under a wide range of operating conditions.

Figure 4

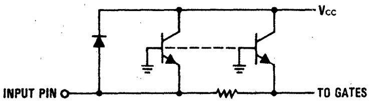

Typically immune to 4000 Volts, TI's unique input protection circuitry provides excellent ESD protection.

Figure 5

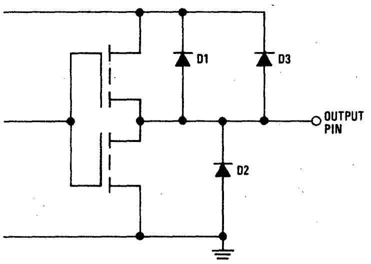

TI's output protection circuitry provides ESD protection typically to 3000 Volts.

Figure 6

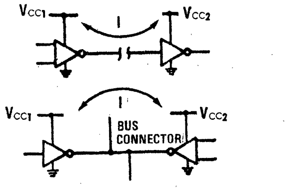

Systems with Multiple V_{CC} supplies.

Figure 7

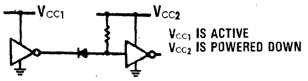

Systems with partial power down. One part of the system attempts to drive another part which is powered down.

Figure 8

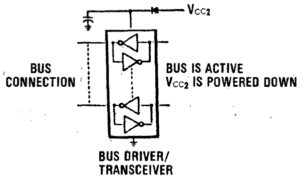

Systems with partial power down. Unpowered bus drivers or transceivers.

Figure 9

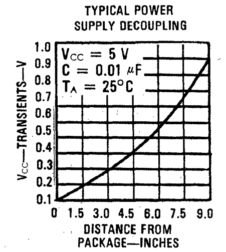

V_{CC} transients Vs. decoupling capacitor distance from the package.

Figure 10

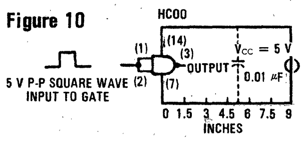

Test circuit for decoupling effects.

Advanced Low Power Schottky/Advanced Schottky

Texas Instruments' Advanced Low Power Schottky (ALS) and Advanced Schottky (AS) families provide a broad range of functions to aid in optimizing designs. The ALS and AS families enable a socket-by-socket selection of devices for the optimum combination of speed and power. This "Performance Budgeting" allows the designer to achieve outstanding performance levels.

In a typical system, not all logic devices operate at maximum frequencies. As a general rule, 70% of a system runs at frequencies less than the maximum clock frequency. This is called the non-critical path. The remaining 30% of the system is the high-speed portion, running at near maximum clock frequencies, and is considered the critical path. When operating under the 70/30 rule, the designer is able to optimize system performance by selection of the appropriate logic family.

For example, ALS/AS can be used to optimize a system by using ALS devices in the non-critical path and AS devices in the critical path. The ALS devices provide reasonable speed and minimum power dissipation, 1.2 mW/gate, while the AS devices offer minimal delay times, 1.7 ns, at a cost of 8 mW/gate. Of course, the power dissipation is still well below that of Schottky. By applying performance budgeting, designers are able to optimize the speed and power performance of digital systems.

LOGIC PERFORMANCE BUDGETING

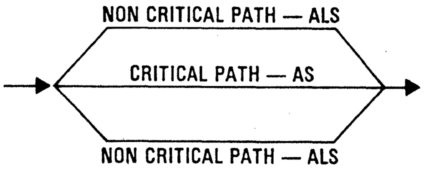

TYPICAL SYSTEM MIX:	
70%	ALS
30%	AS

1000 GATE SYSTEM		
ALS	AS	FAST
700 GATES X 1.2MW/GATE 840MW	300 GATES X 8MW/GATE 2400MW	1000 Gates X 4MW/GATE
TOTAL 3240MW		TOTAL 4000MW
POWER SAVING 760MW — 19 PERCENT		

Other Advantages Of ALS/AS

Designed as enhancements to the Low Power Schottky and Schottky families, ALS and AS offer a 4 X improvement in the speed/power product over the older technologies. ALS offers a 50% speed improvement over LSTTL and consumes only 60% the power of LS. Likewise, AS is a 40% speed improvement over Schottky and consumes only 40% the power of Schottky.

Both the ALS and AS families feature ESD protection approaching 4000 Volts by incorporating an NPN Schottky transistor on the input stage. This protection is twice as great as that of the LS/S family.

In addition, ALS and AS feature improved threshold voltage and reduced input leakage over LS and S TTL, respectively. ALS also offers improved noise immunity when compared to Low Power Schottky.

Other new features include special AC and DC "Miller-killer" circuits on most AS and selected ALS functions. The AC "Miller-killer" circuits reduce output current spiking, characteristic of TTL. DC "Milier-killer" circuits reduce the output capacitance on three-state devices.

MILITARY HIGH VOLUME PRODUCTS
TYPICAL BIPOLAR SPEED/POWER

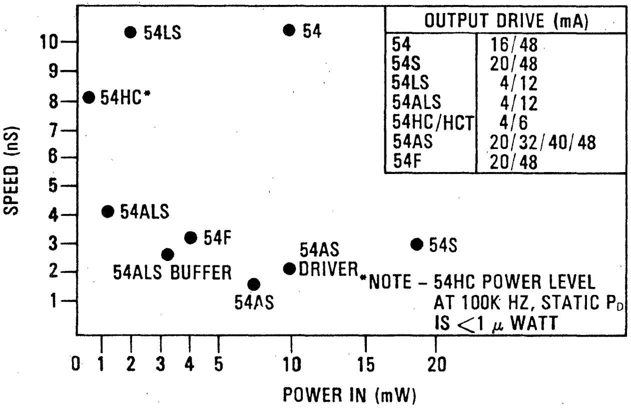

OUTPUT DRIVE (mA)	
54	16/48
54S	20/48
54LS	4/12
54ALS	4/12
54HC/HCT	4/6
54AS	20/32/40/48
54F	20/48

A graphic representation of military IC speed/power characteristics shows the substantial improvements provided by 54ALS, 54AS, 54HC and 54F over their older counterparts (54LS and 54S). The new families are faster and consume far less power than the older versions. Note the important output drive specifications in the box.

Logic Product Spectrum

	Class B	DESC	JM38510		Class B	DESC	JM38510		Class B	DESC	JM38510		Class B	DESC	JM38510
5400	X		X	5453	X		X	54148	X			54198	X		
5401	X		X	5454	X		X	54150	X			54199	X		
5402	X		X	5470	X		X	54151	X			54221	X		
5403	X		X	5472	X		X	54153	X			54246	X		
5404	X		X	5473	X		X	54154	X			54247	X		
5405	X		X	5474	X		X	54155	X			54251	X		
5406	X		X	5475	X			54156	X			54259	X		
5407	X		X	5476	X		X	54157	X			54265	X		
5408	X			5482	X			54160	X			54278	X		
5409	X			5483	X		X	54161	X		X	54279	X		
5410	X		X	5485	X			54162	X			54283	X		
5412	X		X	5486	X		X	54163	X			54284	X		
5413	X			5490	X			54164	X			54285	X		
5414	X			5491	X			54165	X			54290	X		
5416	X		X	5492	X			54166	X			54293	X		
5417	X		X	5493	X			54167	X			54298	X		
5420	X		X	5494	X			54170	X			54365	X		
5422	X			5495	X			54173	X			54366	X		
5423	X		X	5496	X			54174	X		X	54367	X		
5425	X		X	5497	X			54175	X		X	54368	X		
5426	X			54100	X			54176	X			54376	X		
5427	X		X	54107	X		X	54177	X			54390	X		
5428	X			54109	X			54178	X			54393	X		
5430	X		X	54111	X			54179	X						
5432	X			54116	X			54180	X			54ALS00	X		X
5433	X			54120	X			54181	X			54ALS01	X		
5437	X		X	54121	X			54182	X			54ALS02	X		X
5438	X		X	54122	X			54184	X			54ALS03	X		
5440	X		X	54123	X			54185	X			54ALS04	X		X
5442	X			54125	X			54190	X			54ALS05	X		
5445	X			54126	X			54191	X			54ALS08	X		X
5446	X			54128	X			54192	X			54ALS09	X	X	
5447	X			54132	X			54193	X			54ALS10	X		X
5448	X			54136	X			54195	X			54ALS11	X		X
5450	X		X	54144	X			54196	X			54ALS12	X		
5451	X		X	54147	X			54197	X			54ALS15	X		

X = Available, P = Planned

Logic Product Spectrum

	Class B	DESC	JM38510
54ALS20	X		X
54ALS21	X		
54ALS22	X		
54ALS27	X		X
54ALS28	X		
54ALS30	X		X
54ALS32	X		X
54ALS33	X		
54ALS37	X		
54ALS38	X		
54ALS74	X	*	X
54ALS86	P		
54ALS109	X	X	X
54ALS112	X	X	X
54ALS113	X		
54ALS114	X		
54ALS133	X		X
54ALS137	P		
54ALS138	X		X
54ALS139	P		
54ALS151	X	X	
54ALS153	X	*	
54ALS157	P		
54ALS158	P		
54ALS161	X	*	
54ALS162	X	*	
54ALS163	X	*	
54ALS169	X	*	
54ALS174	X	*	
54ALS175	X	*	X
54ALS191	X		
54ALS193	X		
54ALS240	X		X
54ALS241	X		X
54ALS242	X	*	
54ALS243	X	*	
54ALS244	X		X
54ALS245	X	*	
54ALS251	X		
54ALS253	X		
54ALS257	X		
54ALS258	X		
54ALS259	P		
54ALS273	X		
54ALS299	X	*	
54ALS323	X	*	
54ALS352	X		
54ALS353	X		
54ALS373	X	X	
54ALS374	X	X	
54ALS520	X		
54ALS533	P		
54ALS534	P		
54ALS540	P		
54ALS541	P		
54ALS561	P		
54ALS563	X		
54ALS564	X		
54ALS569	X	*	
54ALS573	X	*	
54ALS574	X	*	
54ALS575	P		
54ALS576	X	*	
54ALS577	P		
54ALS580	X	*	
54ALS620	P		
54ALS640	P		
54ALS645	X		
54ALS646	P		
54ALS648	P		
54ALS651	P		
54ALS652	P		
54ALS688	P		
54ALS804	X		
54ALS805	X		
54ALS808	X		
54ALS832	X		
54ALS857	X		X
54ALS873	X	*	
54ALS874	X	*	
54ALS1000			X
54ALS1002			X
54ALS1010	X	*	
54ALS1020			X
54ALS1034	X	*	X
54ALS1244	X		
54ALS1245	X		
54AS00	P		
54AS02	P		
54AS08	P		
54AS10	P		
54AS11	P		
54AS20	P		
54AS21	P		
54AS27	P		
54AS30	P		
54AS74	X		
54AS109	P		
54AS138	P		
54AS157	P		
54AS158	P		
54AS161	P		
54AS163	P		
54AS169	P		
54AS174	P		
54AS181	X		
54AS182	P		
54AS194	P		
54AS230	P		
54AS231	P		
54AS240	X		
54AS241	X		
54AS242	P		
54AS244	X		
54AS257	P		
54AS373	X		
54AS374	X		
54AS573	P		
54AS574	P		
54AS575	P		
54AS576	P		
54AS640	P		
54AS645	P		
54AS646	P		
54AS648	P		
54AS651	P		
54AS652	P		
54AS804	X		
54AS805	X		
54AS808	P		
54AS821	P		
54AS822	P		
54AS825	P		
54AS832	X		
54AS841	P		
54AS850	P		
54AS866	P		
54AS867	P		
54AS869	P		
54AS874	P		
54AS876	P		
54AS881	P		
54AS882	P		

X = Available, P = Planned, * = ALS DESC Approvals Pending Re-approval.

FOR COMPLETE DATA SHEET, Call 800-443-0100, Ext. 518

Logic Product Spectrum

	Class B	DESC	JM38510
54AS885	P		
54AS1004	P		
54AS1032	P		
54AS1034	P		
54HC00	X	X	X
54HC02	X	X	
54HC03	X		
54HC04	X	X	
54HC05	X		
54HC08	X	X	
54HC09	X		
54HC10	X	X	X
54HC11	X	X	
54HC14	X	X	
54HC20	X	X	X
54HC21	X		
54HC27	X	X	
54HC30	X	X	X
54HC32	X	X	
54HC36	X		
54HC42	P		
54HC51	X		
54HC74	X	X	
54HC75	X	X	
54HC77	P		
54HC86	X	X	
54HC107	X		
54HC109	X	X	
54HC112	X	X	
54HC113	X		
54HC114	X		
54HC125	X		
54HC126	X		
54HC133	X		
54HC137	X		
54HC138	X	X	
54HC139	X	X	
54HC151	X		
54HC152	X		
54HC153	X	X	
54HC157	X		
54HC158	X		
54HC160	X		
54HC161	X	X	
54HC162	P		
54HC163	P		
54HC164	X	X	
54HC165	X	X	
54HC166	X		
54HC173	X		
54HC174	X	X	
54HC175	X	X	
54HC180	X		
54HC190	X		
54HC191	X		
54HC192	X		
54HC193	X		
54HC194	X		
54HC195	P		
54HC237	P		
54HC238	P		
54HC240	X	X	
54HC241	X		
54HC242	P		
54HC243	P		
54HC244	X	X	
54HC245	X	X	
54HC251	X		
54HC253	X		
54HC257	X		
54HC258	P		
54HC259	X		
54HC266	X	X	
54HC273	X	X	
54HC280	X		
54HC298	P		
54HC352	P		
54HC353	P		
54HC365	X	X	
54HC366	P		
54HC367	X	X	
54HC368	X		
54HC373	X	X	
54HC374	X	X	
54HC377	X		
54HC378	X		
54HC379	X		
54HC386	X		
54HC390	P		
54HC393	X	X	
54HC490	P		
54HC533	P		
54HC534	P		
54HC540	P		
54HC541	P		
54HC563	P		
54HC573	P		
54HC574	P		
54HC590	P		
54HC592	P		
54HC593	P		
54HC595	P		
54HC597	P		
54HC598	P		
54HC620	X		
54HC623	X		
54HC640	X		
54HC643	X		
54HC645	X		
54HC646	P		
54HC648	P		
54HC651	P		
54HC652	P		
54HC670	P		
54HC682	P		
54HC684	P		
54HC688	P		
54HC4002	X	X	
54HC4020	P		
54HC4024	P		
54HC4040	P		
54HC4060	P		
54HC4075	X		
54HC4078	X		
54HC4724	P		
54HCT137	P		
54HCT138	P		
54HCT237	P		
54HCT238	P		
54HCT240	P		
54HCT241	P		
54HCT244	X		
54HCT245	P		
54HCT373	P		
54HCT374	P		
54HCT540	P		
54HCT541	P		
54HCU04	P		
54LS00	X		X
54LS01	X		
54LS02	X		X
54LS03	X		X
54LS04	X		X

X = Available, P = Planned.

TEXAS INSTRUMENTS
POST OFFICE BOX 225012 • DALLAS, TEXAS 75265

Logic Product Spectrum

	Class B	DESC	JM38510		Class B	DESC	JM38510		Class B	DESC	JM38510		Class B	DESC	JM38510
54LS05	X		X	54LS90	X		X	54LS174	X		X	54LS280	X		X
54LS08	X		X	54LS91	X			54LS175	X		X	54LS283	X	X	X
54LS09	X	X		54LS92	X		X	54LS181	X			54LS289	X		
54LS10	X		X	54LS93	X	X	X	54LS183	X			54LS290	X		X
54LS11	X		X	54LS95	X		X	54LS189	X			54LS292	P		
54LS12	X		X	54LS96	X		X	54LS190	X	X	X	54LS293	X		X
54LS13	X		X	54LS107	X		X	54LS191	X	X	X	54LS295	X		X
54LS14	X		X	54LS109	X		X	54LS192	X	X	X	54LS297	P		
54LS15	X		X	54LS122	X	X	X	54LS193	X	X	X	54LS298	X	X	
54LS20	X		X	54LS123	X	X	X	54LS194	X		X	54LS299	X	X	
54LS21	X		X	54LS125	X		X	54LS195	X		X	54LS319	X		
54LS22	X		X	54LS126	X		X	54LS196	X	X		54LS320	X		
54LS26	X	X	X	54LS132	X	X	X	54LS197	X	X		54LS321	X		
54LS27	X		X	54LS136	X			54LS219	X			54LS322	X		
54LS28	X			54LS137	X			54LS221	X	X	X	54LS323	X		
54LS30	X		X	54LS138	X	X	X	54LS222	X			54LS347	X		
54LS32	X		X	54LS139	X	X	X	54LS224	X			54LS348	X		X
54LS33	X			54LS145	X			54LS240	X	X	X	54LS352	X		
54LS37	X		X	54LS147	X			54LS241	X		X	54LS353	X		
54LS38	X		X	54LS148	X	X	X	54LS242	X	X	X	54LS356	X		
54LS40	X		X	54LS151	X	X	X	54LS243	X	X	X	54LS365	X		X
54LS42	X		X	54LS153	X	X	X	54LS244	X	X	X	54LS366	X		X
54LS47	X	X	X	54LS155	X		X	54LS245	X	X	X	54LS367	X		X
54LS48	X			54LS156	X		X	54LS247	X			54LS368	X		X
54LS49	X			54LS157	X	X	X	54LS248	X			54LS373	X		X
54LS51	X		X	54LS158	X		X	54LS249	X			54LS374	X		X
54LS54	X		X	54LS160	X		X	54LS251	X	X	X	54LS375	X		X
54LS63	X			54LS161	X	X	X	54LS253	X	X	X	54LS377	X		X
54LS73	X		X	54LS162	X		X	54LS257	X		X	54LS378	X		
54LS74	X		X	54LS163	X		X	54LS258	X		X	54LS379	X		
54LS75	X	X	X	54LS164	X		X	54LS259	X		X	54LS381	X		
54LS76	X	X	X	54LS165	X	X	X	54LS261	X	X		54LS382	X		
54LS78	X			54LS166	X	X	X	54LS266	X		X	54LS385	X		
54LS83	X	X	X	54LS169	X			54LS273	X	X	X	54LS386	X		
54LS85	X		X	54LS170	X	X		54LS275	X			54LS390	X		X
54LS86	X		X	54LS173	X		X	54LS279	X	X	X	54LS393	X		X

X = Available, P = Planned.

Logic Product Spectrum

	Class B	DESC	JM38510		Class B	DESC	JM38510		Class B	DESC	JM38510		Class B	DESC	JM38510
54LS395	X		X	54LS670	X	X		54S22	X		X	54S162	X		
54LS396	X			54LS673	X			54S30	X		X	54S163	X		
54LS398	X			54LS674	X			54S32	X			54S168	X		
54LS399	X			54LS681	X			54S37	X			54S169	X		
54LS442	X			54LS682	X			54S38	X			54S174	X		X
54LS490	X		X	54LS683	X			54S40	X			54S175	X		X
54LS540	X		X	54LS684	X	X		54S51	X			54S181	X		
54LS541	X		X	54LS685	X			54S64	X		X	54S182	X		X
54LS590	P			54LS688	X			54S65	X			54S194	X	X	
54LS592	P			54LS689	X			54S74	X		X	54S195	X		
54LS593	P			54LS691	X			54S85	X		X	54S196	X		
54LS595	P			54LS693	X			54S86	X		X	54S197	X		
54LS597	P			54LS696	X			54S112	X		X	54S226	X		
54LS598	P			54LS697	X			54S113	X			54S240	X		
54LS623	X			54LS699	X			54S114	X			54S241	X		
54LS624	X							54S124	X			54S244	X		
54LS626	X			54S00	X		X	54S132	X			54S251	X	X	
54LS628	X			54S02	X		X	54S133	X			54S257	X		X
54LS629	X	X		54S03	X		X	54S134	X			54S258	X	X	
54LS630	X			54S04	X		X	54S135	X			54S260	X		
56LS640	X	X		54S05	X		X	54S138	X	X	X	54S280	X		
54LS641	X			54S08	X			54S139	X	X		54S281	X		
54LS642	X			54S09	X			54S140	X			54S283	X		
54LS644	X			54S10	X		X	54S151	X		X	54S299	X		
54LS645	X			54S11	X		X	54S153	X		X	54S373	X		
54LS668	X			54S15	X			54S157	X		X	54S374	X		
54LS669	X			54S20	X		X	54S158	X		X	54S381	X		

X = Available, P = Planned.

JM38510 qualifications are as of QPL65.
Contact factory for plans.
For Pin-Out and Functional Information,
See the TI Commercial Digital Section.

Linear

Linear Nomenclature

Orders for linear functions as described in Selection Guide should include complete Device Type Number as noted:
EXAMPLE: LinCMOS Dual, Low Bias Operational Amplifier. Device Type Number — TLC27L2BMJGB.

TLC 27 L 2 B M JG B

PREFIX
Must contain two or three letters
TL = TI Linear Products
TLC = TI LinCMOS Products

CIRCUIT DESIGNATION
Must contain two or three numbers

BIAS CURRENT
L = Low, M = Med
No Letter = High

DEVICE COMPLEXITY
1 = Single
2 = Dual
4 = Quad

Class B Processing

PACKAGE
FK = LCCC
J = 14 Pin C-DIP
JG = 8 Pin C-DIP

OPERATING TEMPERATURE RANGE
M = Military (−55°C to 125°C)

INPUT OFFSET VOLTAGE
A = 5.0 mV, B = 2.0 mV
No Letter = 10.0 mV

STANDARD SECOND SOURCE PREFIXES

ADC = National
LM = National
MC = Motorola
OP = PMI
RM = Raytheon
SE = Signetics
SG = Silicon General
μA = Fairchild

Interface functions as described in Selection Guide should include complete Device Type Number as noted:
EXAMPLE: Dual Line Driver with Class B Processing. Device Type Number — SNJ55109AJ

SNJ 55 109A J

PREFIX
SN = TI Interface Product
SNJ = TI Interface Product
with Class B Processing

MIL TEMP RANGE
(−55°C to 125°C)

STANDARD SECOND SOURCE PREFIXES
AM = AMD
DS = National
μA = Fairchild

PACKAGE
FK = Chip Carrier
J = 14/16/20 Pin C-DIP
JG = 8 Pin C-DIP
W = Flat Pack

CIRCUIT DESIGNATION
May contain two, three or four numbers & letters

Linear Selection Guide

Operational Amplifiers, Single, Internally Compensated

Military Temperature Range (Values Specified For $T_A = 25°C$)

Device Number	Supply Voltage (V) Min	Supply Voltage (V) Max	V_{IO} (mV) Max	I_{IB} (nA) Max	S.R. (V/μS) Typ	B.W. (MHz) Typ	Description
LM107	± 2	±22	2	75	.5	1	High Performance
SE5534	± 3	±20	2	800	13	10	High Performance
TL061M	±1.5	±18	6	.2	3.5	1	BIFET — Low Power
TL071M	± 5	±18	6	.2	13	3	BIFET — Low Noise
TL081M	± 4	±18	6	.2	13	3	BIFET — General Purpose
TLC271M	4	16	10	.001 Typ	4.5	2.3	LinCMOS Programmable
TLC271AM	4	16	5	.001 Typ	4.5	2.3	LinCMOS Programmable
TLC271BM	4	16	2	.001 Typ	4.5	2.3	LinCMOS Programmable
μA702M	−3 6	−7 14	2	500	11	0.5	High Gain
μA741M	± 2	±22	5	500	.5	1	General Purpose

Operational Amplifiers, Single, Uncompensated

Device Number	Supply Voltage (V) Min	Supply Voltage (V) Max	V_{IO} (mV) Max	I_{IB} (nA) Max	S.R. (V/μS) Typ	B.W. (MHz) Typ	Description
μA709AM		±18	2	200	.3	1	General Purpose
μA709M		±18	5	500	.3	1	General Purpose

Operational Amplifiers, Dual, Internally Compensated

Device Number	Supply Voltage (V) Min	Supply Voltage (V) Max	V_{IO} (mV) Max	I_{IB} (nA) Max	S.R. (V/μS) Typ	B.W. (MHz) Typ	Description
LM158	3	30	5	−150	.3	.6	High Gain
MC1558	± 2	±22	5	500	.5	1	General Purpose
TL062M	± 2	±18	6	.2	3.5	1	BIFET — Low Power
TL072M	± 4	±18	6	.2	13	3	BIFET — Low Noise
TL082M	± 4	±18	6	.2	13	3	BIFET — General Purpose
TL288M	± 4	±18	3	.4	13	3	BIFET — Low V_{IO}
TLC272M	4	16	10	.001 Typ	4.5	2.3	LinCMOS — High Bias
TLC272AM	4	16	5	.001 Typ	4.5	2.3	LinCMOS — High Bias
TLC272BM	4	16	2	.001 Typ	4.5	2.3	LinCMOS — High Bias
TLC27L2M	4	16	10	.001 Typ	4.5	2.3	LinCMOS — Low Bias
TLC27L2AM	4	16	5	.001 Typ	4.5	2.3	LinCMOS — Low Bias
TLC27L2BM	4	16	2	.001 Typ	4.5	2.3	LinCMOS — Low Bias
TLC27M2M	4	16	10	.001 Typ	4.5	2.3	LinCMOS — Med. Bias
TLC27M2AM	4	16	5	.001 Typ	4.5	2.3	LinCMOS — Med. Bias
TLC27M2BM	4	16	2	.001 Typ	4.5	2.3	LinCMOS — Med. Bias
μA747M	± 2	±22	200	500	.5	1	General Purpose

* Future Product

Linear Selection Guide

Operational Amplifiers, Quad, Internally Compensated

Military Temperature Range (Values Specified For $T_A = 25°C$)

Device Number	Supply Voltage (V)		V_{IO} (mV) Max	I_{IB} (nA) Max	S.R. (V/μS) Typ	B.W. (MHz) Typ	Description
	Min	Max					
LM124	3	30	5	−150	.5	.6	General Purpose
LM148	—	±22	5	100	.5	1	General Purpose
RM4136	±4	±22	4	400	1.7	3.5	High Performance
TL064M	±2	±18	9	.2	3.5	1	BIFET — Low Power
TL074M	±4	±18	9	.2	13	3	BIFET — Low Noise
TL084M	±4	±18	9	.2	13	3	BIFET — General Purpose
TL294M*	±4	±18	—	—	50	20	High Speed
TLC274M	4	16	10	.001 Typ	4.5	2.3	LinCMOS — High Bias
TLC274AM	4	16	5	.001 Typ	4.5	2.3	LinCMOS — High Bias
TLC274BM	4	16	2	.001 Typ	4.5	2.3	LinCMOS — High Bias
TLC27L4M	4	16	10	.001 Typ	4.5	2.3	LinCMOS — Low Bias
TLC27L4AM	4	16	5	.001 Typ	4.5	2.3	LinCMOS — Low Bias
TLC27L4BM	4	16	2	.001 Typ	4.5	2.3	LinCMOS — Low Bias
TLC27M4M	4	16	10	.001 Typ	4.5	2.3	LinCMOS — Med. Bias
TLC27M4AM	4	16	5	.001 Typ	4.5	2.3	LinCMOS — Med. Bias
TLC27M4BM	4	16	2	.001 Typ	4.5	2.3	LinCMOS — Med. Bias

Voltage Comparators

Military Temperature Range (Values Specified For TA = 25°C)

Device Number	Type	Supplies		Response Time (Typ) (ns)	V_{IO} Max (mV)	Features
		Vcc+ (Nom V)	Vcc − (Nom V)			
LM106	Single	12	−6	28	2	High Speed with Strobe
LM111		15	−15	115	3	General Purpose with Strobe
TL510M		12	−6	30	2	High Speed with Strobe
TL710M		12	−6	40	2	General Purpose
μA710M		12	−6	40	2	General Purpose
LM193	Dual	5	0	300	5	Vcc = 2v to 36v
TL506M		12	−6	28	2	High Speed with Strobes
TL514M		12	−6	30	2	Dual TL510
TLC372M*		5	0	200	—	LinCMOS Vcc = 4v to 18v
μA711M		12	6	40	3.5	General Purpose with Strobes
LM139	Quad	5	0	300	5	Vcc = 2v to 36v
LM139A		5	0	300	2	Tighter Input V_{IO}
TLC374M*		5	0	200	10	LinCMOS Vcc = 4v to 18v

* Future Product

Linear Selection Guide

Voltage Regulators

Fixed Output Regulators

Device Number	Output Voltage (V)	Type
μA78M05M	5.0	Positive
μA78M08M	8.0	Positive
μA78M12M	12.0	Positive
μA79M05M	−5.0	Negative

Special Functions

Device Number	Description
SE555	Timer
SE556	Dual Timer
SN55426B	AC Plasma Display Driver
SN55427B	AC Plasma Display Driver
SN55500D	AC Plasma Display Driver
SN55501D	AC Plasma Display Driver
SN55551	32 Bit EL Display Row Driver
SN55552	32 Bit EL Display Row Driver
SN55553	32 Bit EL Display Column Driver
SN55554	32 Bit EL Display Column Driver
TL441M	Logrithmic Amplifier
TLC555M*	LinCMOS Timer
TLC556M*	LinCMOS Dual Timer
μA733M	Video Amplifier

* Future Product

Variable Output Regulators

Device Number	Output Voltage		Type
	Min	Max	
TL431M	2.55V	36V	Shunt
μA723M	3V	38V	Series

Switching Regulator/Controllers

Device Number	Description
SG1524M*	PWM Controller
TL494M	Fixed Frequency PWM
TL497AM	Variable Frequency PWM
TL594M	Improved TL494M

Data Acquisition Circuits

Device Number	Description
ADC0808M*	8 Bit A/D Converter
TLC532AM*	LinCMOS 8 Bit A/D
TLC533AM*	LinCMOS 8 Bit A/D
TLC540M*	LinCMOS 8 Bit A/D
TLC541M*	LinCMOS 8 Bit A/D

Interface Selection Guide

General Purpose Line Drivers

Device Number	# Per Pkg	Output	Power Supplies (V)	Output Current (mA)	Party Line Operation	Strobe or Enable	Companion Receivers	Additional Features
DS7831	2 or 4†	SE/Diff	5	40	Yes	Yes	SN55115, 122	Output Diodes 3-State Output
DS7832	2 or 4†	SE/Diff	5	40	Yes	Yes	SN55152, 182	
SN55109A	2	Diff	±5	3.5	Yes	Yes	SN55107A, B	
SN55110A	2	Diff	±5	6.5	Yes	Yes	SN55108A, B	
SN55113	2	Diff	5	40	Yes	Yes	SN55115	3-State Output
SN55114	2	Diff	5	40	Yes	Yes	SN55182	
SN55121	2	SE	5	40	Yes	Yes	SN55122	
SN55183	2	SE	5	40	No	Yes	SN55182	
SN55450B	2	SE/Diff	5	300	Yes	Yes	SN55122, 152	
SN55451B	2	SE	5	300	Yes	Yes	SN55115, 182	

General Purpose Line Receivers

Device Number	# Per Pkg	Input	Power Supply (V)	Type** of Output	Party Line Operation	Strobe or Enable	Companion Drivers	Additional Features
SN55107A	2	Diff	±5	T-P	Yes	Yes	SN55109A	"B" Version has Input Diode Protection
SN55107B	2	Diff	±5	T-P	Yes	Yes		
SN55108A	2	Diff	±5	O-C	Yes	Yes		
SN55108B	2	Diff	±5	O-C	Yes	Yes	SN55110A	
SN55122	3	SE	5	T-P	Yes	Yes	SN55121, DS7831, 32	With Hysteresis
SN55115	2	Diff	5	Either	Yes	Yes	SN55113, 114	Response Time Control
SN55182	2	Diff	5	T-P	Yes	Yes	DS7831, 32	

General Purpose Line Transceivers

Single 5V Supply

Device Number	# Per Pkg	BUS I/O	Driver		Receiver		Additional Features
			Output Current (mA)	Strobe or Enable	Type of Output**	Strobe or Enable	
AM26S10M*	4	SE	100	Strobe	T-P	Strobe	Schottky — Inverting Driver
AM26S11M*	4	SE	100	Strobe	T-P	Strobe	Schottky — Noninverting Driver
SN55116	1	Diff	40	Enable	T-P or O-C	Strobe	Freq. Response Control
SN55117	1	Diff	40	Enable	T-P	Strobe	Dr & Rec. Internally Connected
SN55118	1	Diff	40	Enable	T-P or O-C	Enable	3-State Receiver Output
SN55119	1	Diff	40	Enable	T-P	Enable	3-State Receiver Output
SN55138	4	SE	100	Strobe	T-P	Strobe	High Threshold Receiver

* Future Product

** T-P = Totem Pole, O-C = Open Collector

† 4 for Single Ended Lines, 2 for Differential Lines

Interface Selection Guide

Military Line Circuits Meeting Data Transmission Standards

Application	Dual Driver	Quad Driver	Dual Receiver	Quad Receiver	Transceivers
EIA RS-232C Single-Ended (1 Driver — 1 Receiver)	SN55150 SN55156*	SN55188	SN55152	SN55154 SN55189 SN55189A	
EIA RS-423A Single-Ended (1 Driver — 10 Receivers)	SN55156*		μA9637AM	AM26LS32AM SN55173	SN55176B* SN55177B* SN55178B* SN55179B*
EIA RS-422A Differential (1 Driver — 10 Receivers)		AM26LS31M* SN55172* SN55174*	μA9637AM	AM26LS32AM SN55173	
EIA RS-485 Differential (32 Drivers — 32 Receivers)		AM26LS31M* SN55172* SN55174*		AM26LS32AM SN55173	SN55176B* SN55177B* SN55178B* SN55179B*
MIL-Std-188C	SN55150		SN55152		
IEEE Std-488 GPIB					SN55160B* SN55161B*

Peripheral Drivers

Device Number	Output Current (mA)	Logic	# Per Pkg
SN55450B	300	AND	2
SN55451B	300	AND	2
SN55461	300	AND	2
SN55471	300	AND	2
SN55452B	300	NAND	2
SN55462	300	NAND	2
SN55472	300	NAND	2
SN55453B	300	OR	2
SN55463	300	OR	2
SN55473	300	OR	2
SN55454B	300	NOR	2
SN55464	300	NOR	2
SN55474	300	NOR	2

* Future Product

** T-P = Totem Pole, O-C = Open Collector

Memory Circuits

Device Number	Type	Function
SN55234	Dual	Sense Amplifier
SN55325	Quad	Memory Driver
SN55326	Quad	Memory Driver
SN55327	Quad	Memory Driver
SN55363	Dual	MOS Driver
SN55365	Quad	MOS Driver

Bipolar Impact Technology

Fastest PALS

20 Pin PAL

IMPACT™ (IMPlanted Advanced Composed Technology) is an advanced bipolar technology. IMPACT's 2 μM feature size and 1.05 mil^2 transistor area offers performance advantages in speed, power, and circuit density over preceding bipolar technologies, the IMPACT technology is in production today and is being applied PAL product families, Biploar PROMs, and selected MSI/LSI ALS and AS devices.

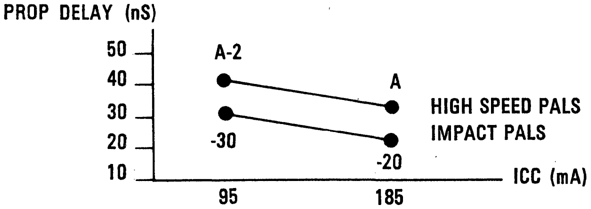

PAL Characteristics Comparison (Military)

	TI				MMI	
Parameter	16XXA	16XXA-2	16XX-20	16XX-30	16XXA	16XXA-2
TPD (nS)	30	40	20	30	30	50
ICC (mA)	185	95	200	105	180	90
FMAX (MHz)	25	16	40	25	20	14

IMPACT is a trademark of Texas Instruments, Inc.

Programmable Array Logic

PAL Nomenclature (Industry Leadership Part Types)

TIB PAL R 19 R 8 −20 M J B

TIB — TI BIPOLAR LEADERSHIP PAL CIRCUIT DESIGNATOR

PAL — PRODUCT FAMILY DESIGNATOR

R — INPUT REGISTER TYPE
Blank = No Input Register
R = D-Type Register
T = Transparent Latch

19 — NUMBER OF ARRAY INPUTS

R — OUTPUT CONFIGURATION DESIGNATOR
L = Active Low
R = Registered
X = Exclusive OR

8 — NUMBER OF OUTPUTS IN THE DESIGNATED CONFIGURATION

−20 — PERFORMANCE DESIGNATOR

High Speed	Half-Power
−20	−30

M — TEMPERATURE RANGE
M = −55°C to 125°C

J — PACKAGE
J = Ceramic DIP
JT = 300-mil Ceramic DIP
FK = LCCC
W = Flatpack

B — PROCESSING
B = Class B Processing

PAL Nomenclature (Industry Equal Part Types)

PAL 16 R 8 A-2 M J B

PAL — PAL CIRCUIT DESIGNATOR

16 — NUMBER OF ARRAY INPUTS

R — OUTPUT TYPE DESIGNATOR
R = Registered
L = Active Low

8 — NUMBER OF OUTPUTS IN THE DESIGNATED CONFIGURATION

A-2 — SPEED/POWER OPTION
A = Std Pwr Fast Speed
A-2 = Half Pwr Fast Speed

M — TEMPERATURE RANGE
M = −55°C to 125°C

J — PACKAGE
J = Ceramic DIP
JT = 300-MIL Ceramic DIP
FK = LCCC

B — PROCESSING
B = Class B Processing

PAL® Product Spectrum

PAL Product Spectrum

Device	Inputs	D-Type Inputs	3-State Outputs	Reg Outputs	I/O Ports	Speed/ICC	DESC Approved	Package Type	
								CDIP	Chip Carrier
PAL16L8A	10	N/A	2	0	6	30 ns/185 mA	X	20 Pin (J)	20 Pad (FK)
PAL16R4A	8	N/A	0	4	4	30 ns/185 mA	X	20 Pin (J)	20 Pad (FK)
PAL16R6A	8	N/A	0	6	2	30 ns/185 mA	X	20 Pin (J)	20 Pad (FK)
PAL16R8A	8	N/A	0	8	0	30 ns/185 mA	X	20 Pin (J)	20 Pad (FK)
PAL16L8A-2	10	N/A	2	0	6	40 ns/95 mA		20 Pin (J)	20 Pad (FK)
PAL16R4A-2	8	N/A	0	4	4	40 ns/95 mA		20 Pin (J)	20 Pad (FK)
PAL16R6A-2	8	N/A	0	6	2	40 ns/95 mA		20 Pin (J)	20 Pad (FK)
PAL16R8A-2	8	N/A	0	8	0	40 ns/95 mA		20 Pin (J)	20 Pad (FK)
TIBPAL16L8-20	10	N/A	2	0	6	20 ns/200 mA		20 Pin (J)	20 Pad (FK)
TIBPAL16R4-20	8	N/A	0	4	4	20 ns/200 mA		20 Pin (J)	20 Pad (FK)
TIBPAL16R6-20	8	N/A	0	6	2	20 ns/200 mA		20 Pin (J)	20 Pad (FK)
TIBPAL16R8-20	8	N/A	0	8	0	20 ns/200 mA		20 Pin (J)	20 Pad (FK)
TIBPAL16L8-30	10	N/A	2	0	6	30 ns/105 mA		20 Pin (J)	20 Pad (FK)
TIBPAL16R4-30	8	N/A	0	4	4	30 ns/105 mA		20 Pin (J)	20 Pad (FK)
TIBPAL16R6-30	8	N/A	0	6	2	30 ns/105 mA		20 Pin (J)	20 Pad (FK)
TIBPAL16R8-30	8	N/A	0	8	0	30 ns/105 mA		20 Pin (J)	20 Pad (FK)
TIBPAL20X10***	10	N/A	0	10	0	25 ns/180 mA		24 Pin (JT)	28 Pad (FK)
TIBPAL20X8***	10	N/A	0	8	2	25 ns/180 mA		24 Pin (JT)	28 Pad (FK)
TIBPAL20X4***	10	N/A	0	4	6	25 ns/180 mA		24 Pin (JT)	28 Pad (FK)
TIBPAL20L10***	12	N/A	2	0	8	25 ns/180 mA		24 Pin (JT)	28 Pad (FK)
TIBPALR19L8-30***	13	11*	2	0	6	30 ns/200 mA		24 Pin (J)	28 Pad (FK)
TIBPALR19R4-30***	11	11*	0	4	4	30 ns/200 mA		24 Pin (J)	28 Pad (FK)
TIBPALR19R6-30***	11	11*	0	6	2	30 ns/200 mA		24 Pin (J)	28 Pad (FK)
TIBPALR19R8-30***	11	11*	0	8	0	30 ns/200 mA		24 Pin (J)	28 Pad (FK)
TIBPALT19L8-30***	13	11**	2	0	6	30 ns/200 mA		24 Pin (J)	28 Pad (FK)
TIBPALT19R4-30***	11	11**	0	4	4	30 ns/200 mA		24 Pin (J)	28 Pad (FK)
TIBPALT19R6-30***	11	11**	0	6	2	30 ns/200 mA		24 Pin (J)	28 Pad (FK)
TIBPALT19R8-30***	11	11**	0	8	0	30 ns/200 mA		24 Pin (J)	28 Pad (FK)

* Registered Input (i.e. . . . Clocked)

** Latched Input

*** Planned Product, Data Sheet not Finalized

® PAL is Registered Trademark of MMI

MOS Memory

MOS Memory Nomenclature

EXAMPLE: SMJ 4164 −15 JD S

PREFIX
Must contain three letters
SMJ = Class B Processing, JEDEC Publication 101

CIRCUIT DESIGNATOR
Must contain four characters

ACCESS TIME
Device types are available with various speeds

TEMPERATURE RANGE
Must contain one letter only
M = −55°C to 125°C
S = −55°C to 100°C (except 4164 & 4256 which are −55°C to 110°C)
E = 40°C to 85°C
L = 0°C to 70°C

PACKAGE TYPE
Must contain one or two letters

Dynamic RAMs

Texas Instrument's Military Dynamic RAM family provides the memory system designer the highest density random access memories at the lowest cost per bit. This is best illustrated in Figure 1, a chart showing the relative cost factor differential between today's available SRAM and DRAM technologies normalized to the 256K density. In general, the cost ratio of an SRAM vs DRAM (density normalized) is about 8:1, or in other words a DRAM bit costs ⅛ as much as an SRAM bit. In the same token, SRAM densities lag DRAM densities by a factor of 4 at any given time.

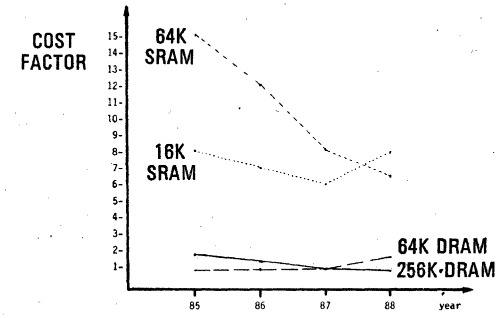

Figure 1: Cost per bit of Random Access Memories over time (Normalized to 256K Density)

DRAM Product Spectrum

The TI Military DRAM family includes a wide range of density configurations, performance and package options, as well as temperature and HI-REL processing options. Figure 2 shows the 5 generic DRAM part types available from TI that includes 64K and 256K densities in both X1 and X4 output configurations as well as a multiport 64K DRAM. Upward pin-for-pin compatibility is maintained from the 64K to 256K DRAM allowing the memory designer to capitalize on his previous TI 64K DRAM investment by expanding the system memory density by 4-fold without any additional cost in board real estate. This equally applies to the X4 output configured part, the SMJ4416 and SMJ4464.

The remaining member of the TI Military DRAM family is the SMJ4161 Multiport Video RAM. The 4161 supports dual-access-ability—random access port behaves exactly like the SMJ4164 64K X 1 DRAM and the sequential access port includes 4 cascaded 64-bit shift registers that can be configured for video data rates in excess of 150 MHz. The SMJ4161 features full asynchronous dual access capability except when transferring data between the 256-bit shift register and the 65,536-bit memory array. The SMJ4161 is especially useful in high resolution graphics system, radar/sonar, test equipment, image processing and communication systems.

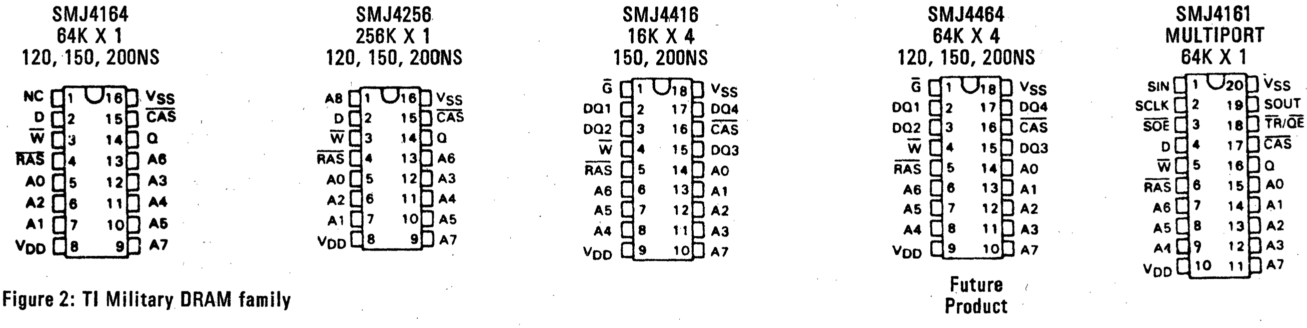
SMJ4164
64K X 1
120, 150, 200NS
NC 1 16 VSS
D 2 15 CAS
W 3 14 Q
RAS 4 13 A6
A0 5 12 A3
A2 6 11 A4
A1 7 10 A5
VDD 8 9 A7
SMJ4256
256K X 1
120, 150, 200NS
A8 1 16 VSS
D 2 15 CAS
W 3 14 Q
RAS 4 13 A6
A0 5 12 A3
A2 6 11 A4
A1 7 10 A5
VDD 8 9 A7
SMJ4416
16K X 4
150, 200NS
G 1 18 VSS
DQ1 2 17 DQ4
DQ2 3 16 CAS
W 4 15 DQ3
RAS 5 14 A0
A6 6 13 A1
A5 7 12 A2
A4 8 11 A3
VDD 9 10 A7
SMJ4464
64K X 4
120, 150, 200NS
G 1 18 VSS
DQ1 2 17 DQ4
DQ2 3 16 CAS
W 4 15 DQ3
RAS 5 14 A0
A6 6 13 A1
A5 7 12 A2
A4 8 11 A3
VDD 9 10 A7
Future Product
SMJ4161
MULTIPORT
64K X 1
SIN 1 20 VSS
SCLK 2 19 SOUT
SOE 3 18 TR/QE
D 4 17 CAS
W 5 16 Q
RAS 6 15 A0
A6 7 14 A1
A5 8 13 A2
A4 9 12 A3
VDD 10 11 A7

Figure 2: TI Military DRAM family

TI 256K DRAM Refresh Options

The TI 256K DRAMs employ the same refresh cycle period as their predecessors the 64K DRAMs. This refresh cycle period is satisfied by strobing each of the 256 rows every 4MS, resulting in a very low refresh overhead of only 1.3% of the total period. In addition to the RAS-only refresh mode that had become the convention on 64K DRAMs, the TI 256K DRAMs offer the user two more optional refresh modes -1) CAS-before-RAS and 2) hidden refresh. Figure 3 shows the basic operation of all 3 refresh modes. In the conventional RAS-only refresh, each refresh cycle required an external address, generated by either a DRAM controller or refresh counter circuitry. However in the RAS-before-CAS or hidden refresh, this refresh counter has been incorporated on-board the 256K DRAM, thus eliminating the need for an external counter as the address lines are treated as don't care during refresh cycles. CAS-before-RAS refresh is accomplished by bringing CAS low before pulling RAS low (i.e. . . . opposite convention of memory cycle), and hidden refresh is another form of CAS-before-RAS in that CAS is kept low after normal memory cycle and RAS is strobed. The user benefits derived from these new refresh options are lower system chip count and reduced refresh overhead possibly resulting in "transparent" refresh.

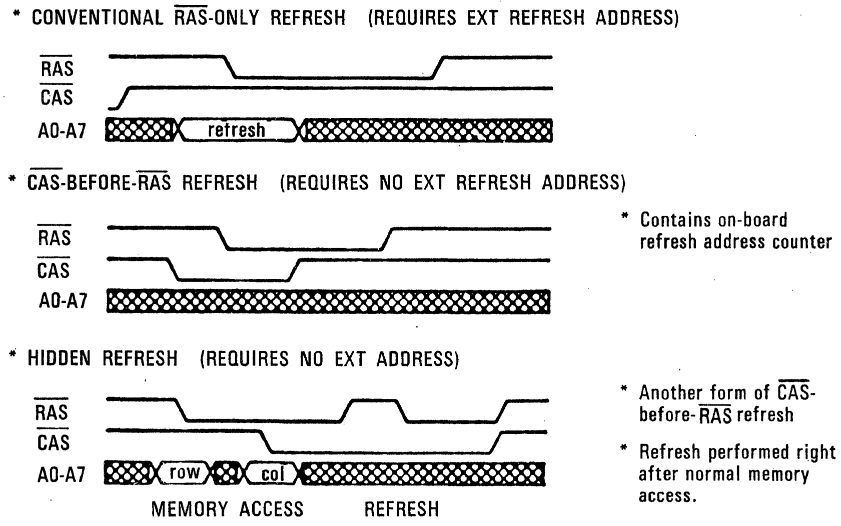

* CONVENTIONAL RAS-ONLY REFRESH (REQUIRES EXT REFRESH ADDRESS)

* CAS-BEFORE-RAS REFRESH (REQUIRES NO EXT REFRESH ADDRESS)

* Contains on-board refresh address counter

* HIDDEN REFRESH (REQUIRES NO EXT ADDRESS)

* Another form of CAS-before-RAS refresh

* Refresh performed right after normal memory access.

Figure 3: TI 256K DRAM refresh options

MOS Memory Product Spectrum

Device	Temp	Max Access Time (ns)	Organization	Package Type	
				C-DIP	Chip Carrier
DRAMs					
4164	S,E,L	120,150,200	64K x 1	16 Pin (JD)	18 Pad (FG)
4416	S,E,L	150,200	16K x 4	18 Pin (JD)	18 Pad (FG)
4161	S	150,200	MP 64K x 1	20 Pin (JD)	20 Pad (FG)
4256	S	120,150,200	256K x 1	16 Pin (JD)	18 Pad (FG)
4464	S	120,150,200	64K x 4	18 Pin (JD)	18 Pad (FG)
EPROMs					
27C256	M	200,250	32K x 8	28 Pin (J)	32 Pad (FG)

Bipolar Memory

Bipolar Memory Nomenclature

These two digits comprise the series designation

EXAMPLE: JBP 2 8 L 8 6 M J

PREFIX
JBP — Class B Processing,
JEDEC Publication 101

GENERIC PROGRAMMING FAMILY
1 — Single Level
2 — Double Level
3 — Oxide Isolated
4 — Other

OUTPUT WORD WIDTH
4 or 8

OUTPUT TYPE
S = Standard Three-State
L = Low-Power Three-State
R = Registered Three-State
SA = Standard Open-Collector
SR = Shadow Registered Three-State

BIT COMPLEXITY
03 = 256 Bits
1 = 1,024 Bits
2 = 2,048 Bits
4 = 4,096 Bits
8 = 8,192 Bits
16 = 16,384 Bits
32 = 32,768 Bits

PACKAGE TYPE
J = Ceramic Dual-In-Line
FK, FG = Ceramic Chip Carrier

TEMPERATURE RANGE
M = −55°C to 125°C

PACKAGE SIZE*

No. of Pins	Row Spacing in Inches (millimeters)		
	0.300 (7.62)	0.400 (10.16)	0.600 (15.24)
16	0	—	—
18	1	—	—
20	2	—	—
22	3	4	—
24	5	—	6
28	—	—	7
40	—	—	8

* Package size designation is not applicable with chip carrier, and should be replaced with the letter X for this package type.

Bipolar Memory Product Spectrum

PROMs

Device	Temp	Speed (ns) Max $t_{a(A)}$[1]	Organization	Package Type C-DIP
18S030	M	50	32 x 8	16 Pin (J)
24S10	M	75	256 x 4	16 Pin (J)
28L22	M	75	256 x 8	20 Pin (J)
28S42	M	70	512 x 8	20 Pin (J)
28L42	M	110	512 x 8	20 Pin (J)
28L86A	M	200	1K x 8	24 Pin (J)
38S030[2]	M	25	32 x 8	16 Pin (J)
38S165[2]	M	35	2K x 8	24 Pin (JT)
38L165[2]	M	50	2K x 8	24 Pin (JT)
34S162[2]	M	40	4K x 4	20 Pin (J)
34L162[2]	M	55	4K x 4	20 Pin (J)

1. $t_{a(A)}$ Access time from address over MIL-temp.
2. Planned Product.

Bipolar and MOS LSI and Memory Support Circuits

Device	Type	Tech	Speed	Temp	Packages
LS630	16-Bit EDAC	LS	N/A	M	28 Pin (JD), 28 Pad (FD)
LS610	Mapper	LS	N/A	M	40 Pin (JD), 44 Pad (FD)
LS222	16 x 4 FIFO	LS	10 MHz	M	20 Pin (J), 28 Pad (FD)
LS224	16 x 4 FIFO	LS	10 MHz	M	16 Pin (J), 28 Pad (FD)
ALS632	32-Bit EDAC	ALS	N/A	M	52 Pin (JD), 68 Pad (FD)
9914A	IEEE GPIB	NMOS		S	40 Pin (JD)

Digital Signal Processor

Digital Signal Processor Nomenclature

EXAMPLE: SMJ 320 10 JD S

PREFIX — SMJ

SMJ = Class B Processing

320 FAMILY DESIGNATOR — 320

320 FAMILY MEMBER DESIGNATOR — 10

TEMPERATURE RANGE — S

L = 0°C to 70°C

S = −55°C to 100°C

PACKAGE — JD

JD = Side-Brazed DIP

FD = LCCC

Digital Signal Processor

The Texas Instruments family of Digital Signal Processors (DSP's) have been designed to support a wide range of high speed and numeric intensive applications. The SMJ320 single-chip microcomputer family combines the flexibility of a high speed controller with the numerical capability of an array processor, thereby offering an inexpensive alternative to multi-chip bit-slice processors (see Figure 1). The SMJ320 DSP circuits offer significant advantages as compared to similar bit slice implementations, namely reduced power dissipation, 10X reduction in chip count, and greater ease of use. In addition, development support is available from TI for all phases of 320 application development, that includes low cost software and hardware development tools (i.e. . . . evaluation module, emulator's, simulators, assembler's, linkers, analog I/F boards, digital filter design software, etc. . . .) that are supported on several host computers (DEC, IBM, TI, etc. . . .) and operating systems (VMS, UNIX, MVS, CMS, MS/PC DOS, etc. . . .).

The SMJ320 DSP Circuits are finding their way into military applications such as missile guidance, smart munitions, control (servo, position and rate, reference), communications and signal processing (digital filtering, data encryption/scrambling, FFT's, voice processing), radar/sonor, ECM, EC2M, and many others.

SMJ32010 Product Features Include:

• 5 Million Instructions per Second Max Execution Rate • 32-Bit Accumulator/ALU • Highly-Pipelined Modified Harvard Architecture • Separate Data and Program Buses • Mostly Single Cycle Executable Instruction Set • On-Board Parallel 16 x 16 Multiplier • On-Board Parallel Barrel and Normalization Shifters • 144 x 1 On-Chip Data RAM • 4K x 16 External Direct Addressing Range • Interrupt Interfaces • 950 MW Typical Power Dissipation • DESC Approved #8405301QC, ZC • 40 Pin Ceramic DIP and 44 Pad Leadless Ceramic Chip Carrier • MIL-STD-883C Class B Hi-Reliability Processing • Demonstrated Radiation Hardness Suitable for Most Tactical Military Applications • Comprehensive Set of Low-Cost and Sophisticated Software and Hardware Development Tools Available • CMOS Version Planned in Future.

SMJ32020* Product Features Include:

• 2-3X Higher Throughput Than SMJ32010 When Operating on DSP Algorithms • 32-Bit Accumulator/ALU • Highly Pipelined Modified Harvard Architecture • Separate Data and Program Buses • Mostly Single Sycle Executable Instruction Set • Single Cycle Multiply/Accumulate Instructions • On-Board Parallel Barrel, Normalization Shifters • 5 Auxiliary Registers With Dedicated ALU for Auto Increment/Decrement Capability • 544 x 16 On-Chip Memory • 256 x 16 Configurable as either Data RAM or Program Memory Storage • 128K x 16 External Direct Addressing Range • 64K x 16 Program Memory, 64K x 16 Data Memory • 16 Input and 16 Output Channels • Multiprocessing Capabilities • On-Chip Hardware to Support Global Memory Access • Hold and Holda Signals for DMA Support • Synchronization Input for Synchronous Multiprocessor Configurations • Memory Ready/Wait Facilities • Comprehensive Instruction Set • Super-Set of 32010 Instruction Set • Upward Software Compatibility Maintained • Instruction Set Support for Floating Point Operations • Fractional and Integer Arithmetic • Bit Manipulation and Logical Instructions • Block Moves for Data/Program Management (Max 80M Bits/Sec) • Repeat Instruction for Efficient Use of Program Space • Direct, Indirect, Immediate Addressing Modes • On-Chip 16-Bit Timer for Control Operations • Dedicated Serial I/O Ports • Single 5V Supply 2.4 Micron NMOS Technology • 1.2W Typical Power Dissipation • 68-Pad Leadless Ceramic Chip Carrier Package Option Planned • CMOS Version Planned in Future.

* Future Planned Product.

Characteristics	Bit Slice Approach	SMJ32010 DSP	SMJ32020 DSP*
Technology	2.0 μm Bipolar (IMOX)	2.4 μm NMOS	2.4 μm NMOS
Bar Size (SQ MILS)	200K Cumulative	50K	115K
Clock Rate (Max)	31 MHz	20 MHz	20 MHz
Cycle Time (Min)	136 ns (Data Loop)	200 ns	200 ns
Through-Put (MIPS)	>15	5 MIPS	>10 MIPS
Base Instructions	25	60	109
Max Power (W)	>18	1.5	2.5
Temp Range (TC)	−55 to 125C	−55 to 100C**	−55C to 100C**
On-Board Data RAM	16 x 16	144 x 16	544 x 16
Barrel Shifter	No	Yes	Yes
Design Ease	Complex	Straight-Forward	Straight-Forward
Package Count	12†	1 (40 Pin)	1 (68 LCCC)

4 2901C 4-Bit Slice (40 Pin)
1 2910A Microsequency (40 Pin)
1 2904 Status/Shift Unit (40 Pin)
1 29510 Multiplier/ACC (64 Pin)
1 2902A Look-Ahead Carry GEN (16 Pin)
4 2918 Pipeline Registers (16 Pin)
†12 Devices (7 ≥ 40 pin)

* Planned Product.

** CMOS versions planned in future to support full MIL-Temp Range.

Figure 1: DSP vs. Bit-Slice Comparison

Bipolar Microprocessor

Microprocessor/Peripheral Nomenclature

EXAMPLE: SBP 9989 N J

PREFIX — SBP

Must contain three letters SBP —

CIRCUIT DESIGNATOR — 9989

Must contain four digits 9989 = Advanced 4.4 MHz 16 Bit Processor

TEMPERATURE RANGE — N

Must contain one letter only N = −55°C to 125°C

PACKAGE — J

Must contain one or two letters — J, FD

TEXAS
INSTRUMENTS
POST OFFICE BOX 225012 • DALLAS, TEXAS 75265

Bipolar Microprocessor

SBP9989 Bipolar Microprocessor Family

The SBP9989 family features a sophisticated memory-to-memory architecture and Bipolar I2L technology that builds-in environmental toughness at the design stage. Unsurpassed in its ability to perform in interrupt intensive applications such as multiple target tracking and decision making systems, the SBP9989 16-bit microprocessor is well suited to meet the demanding real time processing needs of microprocessor embedded computer systems. In addition, dedicated signal lines aid in the implementing of attached processor systems with an efficient and reliable protocol that guards against bus contentions. The SBP9989 as well is supported by wide range of universal and custom peripheral circuit functions that can dramatically reduce overall system chip count while providing basic parallel processor system functions and data transfer control. Hardware and Software development support is available in the form of the 9989 XDS/22 Host independent emulator with cross S/W support for IBM, DEC VAX, TI990 and TIPC and IBM PC.

Product Features:

- 4.4 MHz Clock
- Comprehensive Instruction Set
- 16 H/W & 16 S/W Interrupt Levels
- 128K Bytes Addressing Range
- Multiprocessor Signals
- Serial I/O Capability
- Radiation Tolerant Technology
- SBR9000
    - 2 Micron I²L Technology
    - 9.0 MHz Clock
    - 1 Mega-Rad Total Dose Tolerance
- 9.0 MHz 9989 XDS/22 Emulator

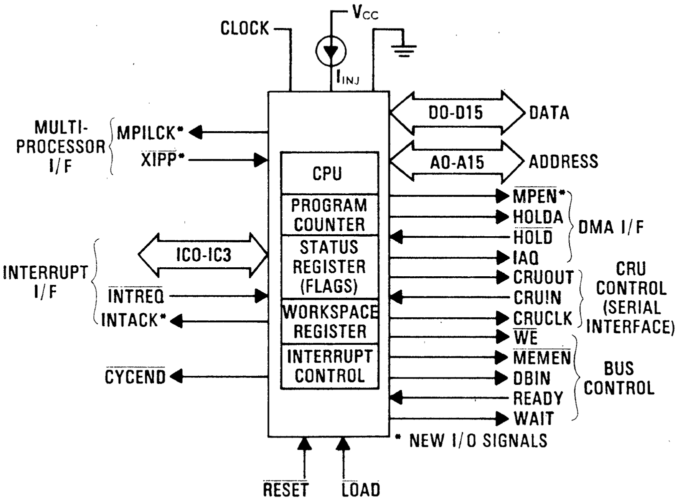
CLOCK
Vcc
IINJ
MULTI-PROCESSOR I/F
MPILCK*
XIPP*
INTERRUPT I/F
ICO-IC3
INTREQ
INTACK*
CYCEND
CPU
PROGRAM COUNTER
STATUS REGISTER (FLAGS)
WORKSPACE REGISTER
INTERRUPT CONTROL
D0-D15
DATA
A0-A15
ADDRESS
MPEN*
HOLDA
HOLD
IAQ
DMA I/F
CRUOUT
CRUIN
CRUCLK
CRU CONTROL (SERIAL INTERFACE)
WE
MEMEN
DBIN
READY
WAIT
BUS CONTROL
* NEW I/O SIGNALS
RESET
LOAD

FIG 1: SBP9989 FEATURES AND SIGNALS

SBP9989 Support Functions

Device	Description	Speed	Package
SBP9989	16-Bit Microprocessor	4.4 MHz	64 Pin (J), 68 Pad (FD)
SBP9901	Programmable System Interface	4.4 MHz	40 Pin (J)
SBP9965	Peripheral Interface Adaptor	N/A	40 Pin (J)
SBP9966	Interrupt Control Circuit	6.0 MHz	40 Pin (J)
TMDS8962210	XDS/22 Emulator	9.0 MHz	Chassis
SBR9000*	16-Bit Microprocessor	9.0 MHz	64 Pin (J)
SBR9901*	Programmable System Interface	TBD	TBD
SBR9965*	Peripheral Interface Adaptor	TBD	TBD
SBR9966*	Interrupt Control Circuit	TBD	TBD

* Denotes Product in Design & Development.

Military I/C Cross Reference Guide

Linear/Interface Examples:

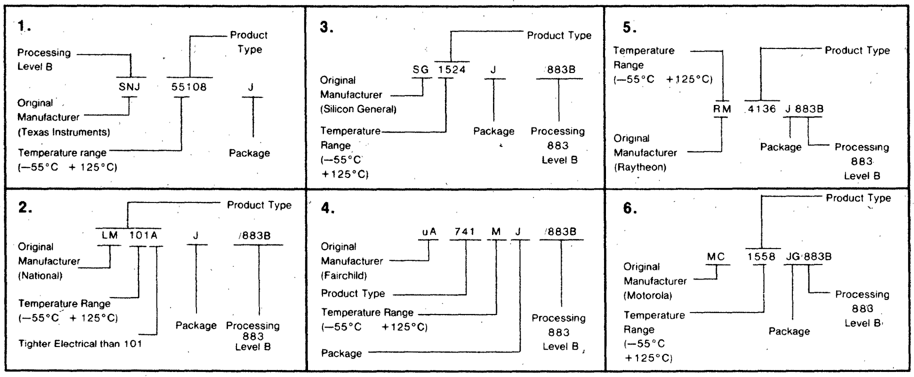
1.
Processing Level B
SNJ
55108
J
Product Type
Original Manufacturer (Texas Instruments)
Temperature range (−55°C + 125°C)
Package
2.
LM 101A J /883B
Product Type
Original Manufacturer (National)
Temperature Range (−55°C + 125°C)
Tighter Electrical than 101
Package
Processing 883 Level B
3.
SG 1524 J 883B
Product Type
Original Manufacturer (Silicon General)
Temperature Range (−55°C +125°C)
Package
Processing 883 Level B
4.
uA 741 M J /883B
Original Manufacturer (Fairchild)
Product Type
Temperature Range (−55°C +125°C)
Package
Processing 883 Level B
5.
Temperature Range (−55°C +125°C)
Product Type
RM 4136 J 883B
Original Manufacturer (Raytheon)
Package
Processing 883 Level B
6.
Product Type
MC 1558 JG 883B
Original Manufacturer (Motorola)
Temperature Range (−55°C +125°C)
Package
Processing 883 Level B

Logic

	883 Class B Processing	Dual-in-line	Flatpack	Chip Carrier
TI	SNJ54XXX	J, JT	W	FK
Motorola	54XXX/BXXJC	C, E, R, J	A, D, F, K	2, 3, U
National	DM54XXX/883C MM54XXX/883C	J	W	
Fairchild	XXXXMQB	D	F	L1
Signetics	AM54XXX/BXA	C, E, R, J	A, D, F, K	2, 3, U
RCA	CD54XXXX3	F	K	
MMI	SN54XXXX883B	J, JS	F	L
AMD	SN54XXXX/BXX	C, E, R, J	A, D, F, K	2, 3, U

MOS Memory

Manufacturer	Prefix
TI	SMJ XXXX-XXJX
Mostek	MKB XXXX
Intel	M XXXX/B
Motorola	MCM XXXX BXBA
National	MM XXXX XX/883
AMD	XXXX DMB
Fairchild	XXXX DMQB

WHAT'S NEW IN IC MASTER

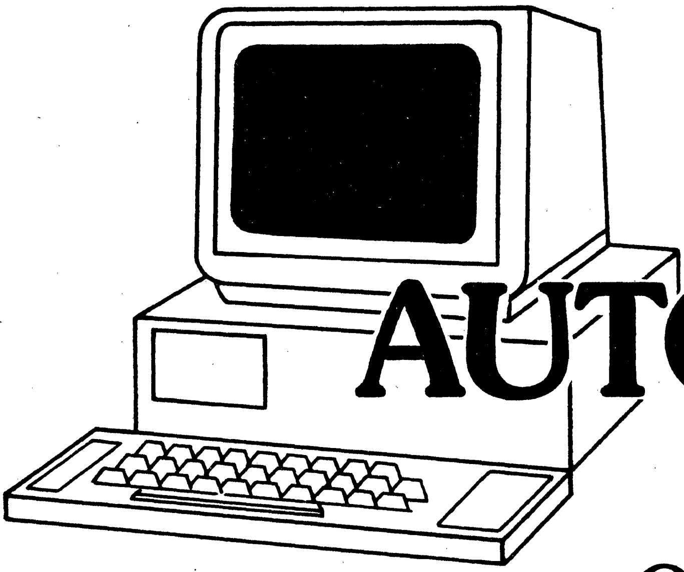

DON'T MISS THE NEW DESIGN AUTOMATION IC SECTION

Quick and easy way to determine relationships between workstations, computers, software, semicustom manufacturers and CAE/CAD providers.

Volume II, page 4901

Reference Guide to Xicor Military Products

4K E²PROMs

Part Number	Organ-ization	Page Size (#Bytes)	Access Time	Power		No. of Pins	Mil. Temp.	883C Class B	Package	
				Active	Standby				D	E
X2804AM	512 x 8	N/A	300ns	100mA	60mA	24	•		•	N/A
X2804AM-35	512 x 8	N/A	350ns	100mA	60mA	24	•		•	N/A
X2804AM-45	512 x 8	N/A	450ns	100mA	60mA	24	•		•	N/A
X2804AMB	512 x 8	N/A	300ns	100mA	60mA	24	•	•	•	N/A
X2804AMB-35	512 x 8	N/A	350ns	100mA	60mA	24	•	•	•	N/A
X2804AMB-45	512 x 8	N/A	450ns	100mA	60mA	24	•	•	•	N/A

16K E²PROMs

Part Number	Organ-ization	Page Size (#Bytes)	Access Time	Power		No. of Pins	Mil. Temp.	883C Class B	Package	
				Active	Standby				D	E
X2816AM	2K x 8	N/A	300ns	140mA	60mA	24	•		•	•
X2816AM-35	2K x 8	N/A	350ns	140mA	60mA	24	•		•	•
X2816AM-45	2K x 8	N/A	450ns	140mA	60mA	24	•		•	•
X2816AMB	2K x 8	N/A	300ns	140mA	60mA	24	•	•	•	•
X2816AMB-35	2K x 8	N/A	350ns	140mA	60mA	24	•	•	•	•
X2816AMB-45	2K x 8	N/A	450ns	140mA	60mA	24	•	•	•	•

64K E²PROMs

Part Number	Organ-ization	Page Size (#Bytes)	Access Time	Power		No. of Pins	Mil. Temp.	883C Class B	Package		
				Active	Standby				D	E	G
X2864AM-25	8K x 8	16	250ns	140mA	70mA	28	•		•	•	•
X2864AM	8K x 8	16	300ns	140mA	70mA	28	•		•	•	•
X2864AM-35	8K x 8	16	350ns	140mA	70mA	28	•		•	•	•
X2864AM-45	8K x 8	16	450ns	140mA	70mA	28	•		•	•	•
X2864AMB-25	8K x 8	16	250ns	140mA	70mA	28	•	•	•	•	•
X2864AMB	8K x 8	16	300ns	140mA	70mA	28	•	•	•	•	•
X2864AMB-35	8K x 8	16	350ns	140mA	70mA	28	•	•	•	•	•
X2864AMB-45	8K x 8	16	450ns	140mA	70mA	28	•	•	•	•	•

Key:

MIL Temperature = Operating Temperature of −55 to +125°C
MIL-STD-883C = Compliant MIL-STD-883C, Class B Device
/5 and /10 = Endurance Level (See Product Data Sheet)
D = Cerdip Package
E = Ceramic Leadless Chip Carrier (Solder Seal)
G = Ceramic Leadless Chip Carrier (High Temp. Glass Seal)

Cross Reference to Military Specifications

GENERIC DEVICE	DESC* DRAWING	MIL-M-38510 SLASH SHEET
X2816A (2K x 8)	TBD	JM38510/2270X
X2864A (8K x 8)	TBD	JM38510/2280X

*Awaiting drawing number assignment by DESC.

Reference Guide to Xicor Military Products

NOVRAMs

Part Number	Organization	Access Time	Power		Store Cycles	No. of Pins	Mil. Temp.	883C Class B	Package	
			Active	Standby					D	E
X2210M	64 x 4	300ns	55mA	N/A	10,000	18	•		•	N/A
X2210M/5	64 x 4	300ns	55mA	N/A	50,000	18	•		•	N/A
X2210M/10	64 x 4	300ns	55mA	N/A	100,000	18	•		•	N/A
X2210MB	64 x 4	300ns	55mA	N/A	10,000	18	•	•	•	N/A
X2210MB/5	64 x 4	300ns	55mA	N/A	50,000	18	•	•	•	N/A
X2210MB/10	64 x 4	300ns	55mA	N/A	100,000	18	•	•	•	N/A
X2212M	256 x 4	300ns	70mA	N/A	10,000	18	•		•	N/A
X2212M/5	256 x 4	300ns	70mA	N/A	50,000	18	•		•	N/A
X2212M/10	256 x 4	300ns	70mA	N/A	100,000	18	•		•	N/A
X2212MB	256 x 4	300ns	70mA	N/A	10.000	18	•	•	•	N/A
X2212MB/5	256 x 4	300ns	70mA	N/A	50,000	18	•	•	•	N/A
X2212MB/10	256 x 4	300ns	70mA	N/A	100,000	18	•	•	•	N/A

NOVRAMs (Byte-Wide)

Part Number	Organization	Access Time	Power		Store Cycles	No. of Pins	Mil. Temp.	883C Class B	Package	
			Active	Standby					D	E
X2004M-25	512 x 8	250ns	120mA	90mA	100,000	28	•		•	•
X2004M	512 x 8	300ns	120mA	90mA	100,000	28	•		•	•
X2004MB-25	512 x 8	250ns	120mA	90mA	100,000	28	•	1	•	•
X2004MB	512 x 8	300ns	120mA	90mA	100,000	28	•	1	•	•

Note 1: As of publication, device qualification to MIL-STD-883C is in progress.

Key:
MIL Temperature = Operating Temperature of −55 to +125°C
MIL-STD-883C = Compliant MIL-STD-883C, Class B Device
/5 and /10 = Endurance Level (See Product Data Sheet)
D = Cerdip Package
E = Ceramic Leadless Chip Carrier (Solder Seal)
G = Ceramic Leadless Chip Carrier (High Temp. Glass Seal)

Reference Guide to Xicor Military Products

SERIAL NOVRAMs

Part Number	Organ-ization	Clk. Freq.	Power			Store Cycles	No. of Pins	Mil. Temp.	883C Class B	Package	
			Active	Standby	Sleep					D	E
X2444M	16 x 16	1MHz	25mA	15mA	10mA	10,000	8	•		•	N/A
X2444M/10	16 x 16	1MHz	25mA	15mA	10mA	100,000	8	•		•	N/A
X2444MB	16 x 16	1MHz	25mA	15mA	10mA	10,000	8	•	1	•	N/A
X2444MB/10	16 x 16	1MHz	25mA	15mA	10mA	100,000	8	•	1	•	N/A

Note 1: As of publication, device qualification to MIL-STD-883C is in progress.

SERIAL E^{2}PROMs

Part Number	Organ-ization	Page Size (#Bytes)	Clk. Freq.	Power		No. of Pins	Mil. Temp.	883C Class B	Package	
				Active	Standby				D	E
X2404M	512 x 8	8	100KHz	20mA	15mA	8	•		•	N/A
X2404MB	512 x 8	8	100KHz	20mA	15mA	8	•	1	•	N/A

Note 1: As of publication, device qualification to MIL-STD-883C is in progress.

Key:
MIL Temperature = Operating Temperature of –55 to +125° C
MIL-STD-883C = Compliant MIL-STD-883C, Class B Device
/5 and /10 = Endurance Level (See Product Data Sheet)
D = Cerdip Package
E = Ceramic Leadless Chip Carrier (Solder Seal)
G = Ceramic Leadless Chip Carrier (High Temp. Glass Seal)

E^{2}PROM and NOVRAM*

PIN CONFIGURATIONS

E^{2}PROM

4K

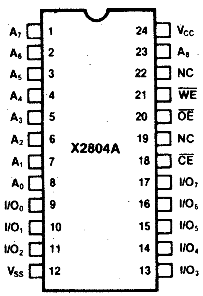
X2804A
1 A_7
2 A_6
3 A_5
4 A_4
5 A_3
6 A_2
7 A_1
8 A_0
9 I/O_0
10 I/O_1
11 I/O_2
12 V_{SS}
24 V_{CC}
23 A_8
22 NC
21 $\overline{WE}$
20 $\overline{OE}$
19 NC
18 $\overline{CE}$
17 I/O_7
16 I/O_6
15 I/O_5
14 I/O_4
13 I/O_3

16K

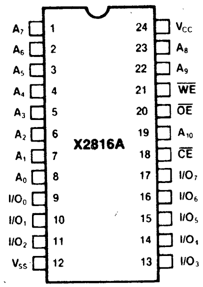
X2816A
1 A_7
2 A_6
3 A_5
4 A_4
5 A_3
6 A_2
7 A_1
8 A_0
9 I/O_0
10 I/O_1
11 I/O_2
12 V_{SS}
24 V_{CC}
23 A_8
22 A_9
21 $\overline{WE}$
20 $\overline{OE}$
19 A_{10}
18 $\overline{CE}$
17 I/O_7
16 I/O_6
15 I/O_5
14 I/O_4
13 I/O_3

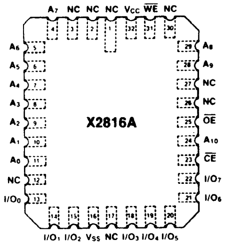
X2816A
A_7 4
NC 3
NC 2
NC 1
V_{CC} 32
$\overline{WE}$ 31
NC 30
A_6 5
A_5 6
A_4 7
A_3 8
A_2 9
A_1 10
A_0 11
NC 12
I/O_0 13
29 A_8
28 A_9
27 NC
26 NC
25 $\overline{OE}$
24 A_{10}
23 $\overline{CE}$
22 I/O_7
21 I/O_6
I/O_1 14
I/O_2 15
V_{SS} 16
NC 17
I/O_3 18
I/O_4 19
I/O_5 20

64K

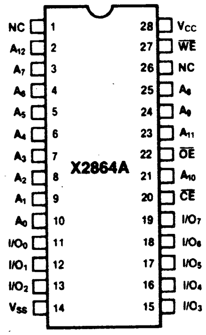
X2864A
1 NC
2 A_{12}
3 A_7
4 A_6
5 A_5
6 A_4
7 A_3
8 A_2
9 A_1
10 A_0
11 I/O_0
12 I/O_1
13 I/O_2
14 V_{SS}
28 V_{CC}
27 $\overline{WE}$
26 NC
25 A_8
24 A_9
23 A_{11}
22 $\overline{OE}$
21 A_{10}
20 $\overline{CE}$
19 I/O_7
18 I/O_6
17 I/O_5
16 I/O_4
15 I/O_3

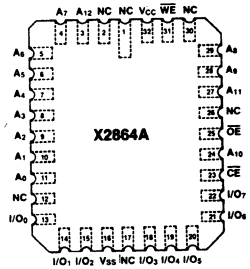
X2864A
A_7 4
A_{12} 3
NC 2
NC 1
V_{CC} 32
$\overline{WE}$ 31
NC 30
A_6 5
A_5 6
A_4 7
A_3 8
A_2 9
A_1 10
A_0 11
NC 12
I/O_0 13
29 A_8
28 A_9
27 A_{11}
26 NC
25 $\overline{OE}$
24 A_{10}
23 $\overline{CE}$
22 I/O_7
21 I/O_6
I/O_1 14
I/O_2 15
V_{SS} 16
NC 17
I/O_3 18
I/O_4 19
I/O_5 20

Serial I/O

4K

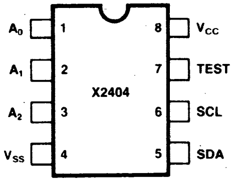
X2404
1 A_0
2 A_1
3 A_2
4 V_{SS}
8 V_{CC}
7 TEST
6 SCL
5 SDA

NOVRAM

Nibble-Wide

256 Bit

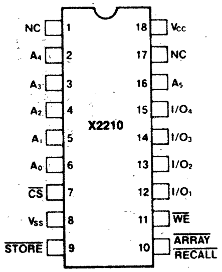
X2210
1 NC
2 A_4
3 A_3
4 A_2
5 A_1
6 A_0
7 $\overline{CS}$
8 V_{SS}
9 $\overline{STORE}$
18 V_{CC}
17 NC
16 A_5
15 I/O_4
14 I/O_3
13 I/O_2
12 I/O_1
11 $\overline{WE}$
10 $\overline{ARRAY}$ $\overline{RECALL}$

1K

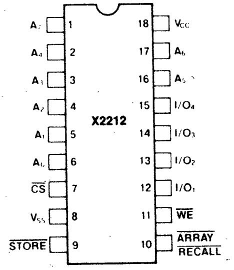
X2212
1 A_7
2 A_4
3 A_3
4 A_2
5 A_1
6 A_0
7 $\overline{CS}$
8 V_{SS}
9 $\overline{STORE}$
18 V_{CC}
17 A_6
16 A_5
15 I/O_4
14 I/O_3
13 I/O_2
12 I/O_1
11 $\overline{WE}$
10 $\overline{ARRAY}$ $\overline{RECALL}$

Byte-Wide

4K

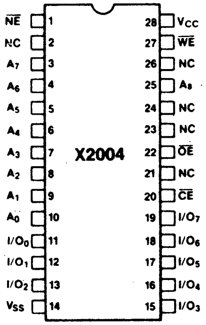
X2004
1 $\overline{NE}$
2 NC
3 A_7
4 A_6
5 A_5
6 A_4
7 A_3
8 A_2
9 A_1
10 A_0
11 I/O_0
12 I/O_1
13 I/O_2
14 V_{SS}
28 V_{CC}
27 $\overline{WE}$
26 NC
25 A_8
24 NC
23 NC
22 $\overline{OE}$
21 NC
20 $\overline{CE}$
19 I/O_7
18 I/O_6
17 I/O_5
16 I/O_4
15 I/O_3

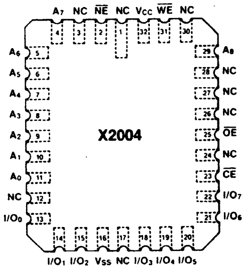
X2004
A_7 4
NC 3
$\overline{NE}$ 2
NC 1
V_{CC} 32
$\overline{WE}$ 31
NC 30
A_6 5
A_5 6
A_4 7
A_3 8
A_2 9
A_1 10
A_0 11
NC 12
I/O_0 13
29 A_8
28 NC
27 NC
26 NC
25 $\overline{OE}$
24 NC
23 $\overline{CE}$
22 I/O_7
21 I/O_6
I/O_1 14
I/O_2 15
V_{SS} 16
NC 17
I/O_3 18
I/O_4 19
I/O_5 20

Serial I/O

256 Bit

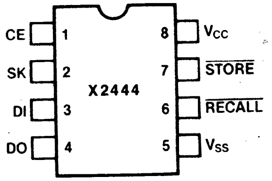
X2444
1 CE
2 SK
3 DI
4 DO
8 V_{CC}
7 $\overline{STORE}$
6 $\overline{RECALL}$
5 V_{SS}

XICOR, Inc., 851 Buckeye Court, Milpitas, California 95035
(408) 946-6920 TWX 910-379-0033

ORDERING INFORMATION

XICOR NOVRAMs

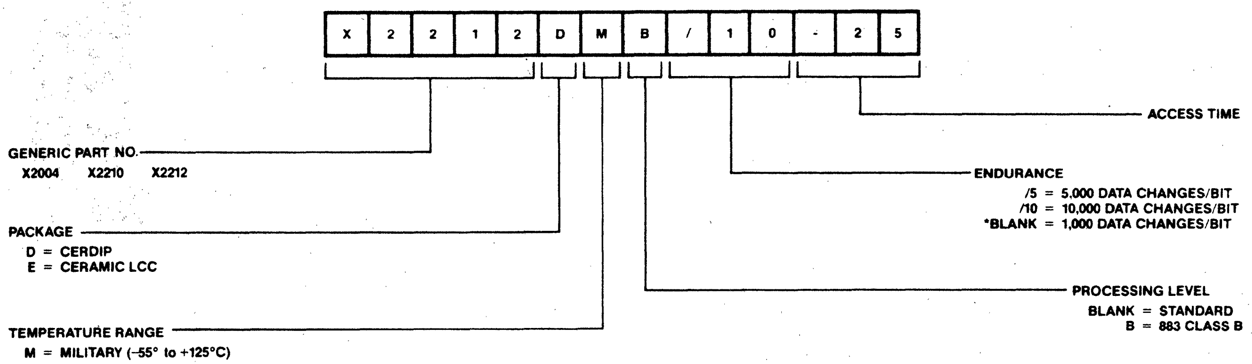

GENERIC PART NO.
X2004 X2210 X2212

PACKAGE
D = CERDIP
E = CERAMIC LCC

TEMPERATURE RANGE
M = MILITARY (−55° to +125°C)

ACCESS TIME

ENDURANCE
/5 = 5,000 DATA CHANGES/BIT
/10 = 10,000 DATA CHANGES/BIT
*BLANK = 1,000 DATA CHANGES/BIT

PROCESSING LEVEL
BLANK = STANDARD
B = 883 CLASS B

*FOR X2004, BLANK = 10,000 DATA CHANGES/BIT

XICOR SERIAL NOVRAMs

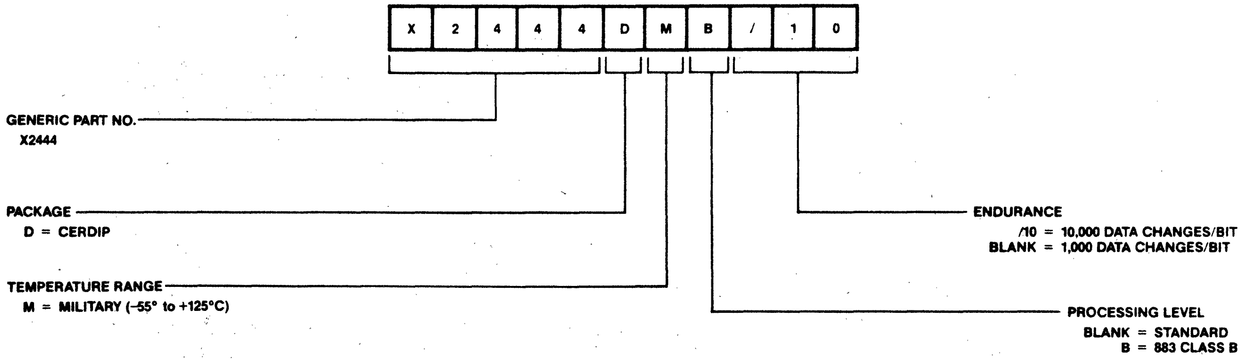

GENERIC PART NO.
X2444

PACKAGE
D = CERDIP

TEMPERATURE RANGE
M = MILITARY (−55° to +125°C)

ENDURANCE
/10 = 10,000 DATA CHANGES/BIT
BLANK = 1,000 DATA CHANGES/BIT

PROCESSING LEVEL
BLANK = STANDARD
B = 883 CLASS B

LIMITED WARRANTY

Devices sold by Xicor, Inc. are covered by the warranty and patent indemnification provisions appearing in its Terms of Sale only. Xicor, Inc. makes no warranty, express, statutory, implied, or by description regarding the information set forth herein or regarding the freedom of the described devices from patent infringement. Xicor, Inc. makes no warranty of merchantability or fitness for any purpose. Xicor, Inc. reserves the right to discontinue production and change specifications and prices at any time and without notice.

Xicor, Inc. assumes no responsibility for the use of any circuitry other than circuitry embodied in a Xicor, Inc. product. No other circuits, patents, licenses are implied.

LIFE RELATED POLICY

In situations where semiconductor component failure may endanger life, system designers using this product should design the system with appropriate error detection and correction, redundancy and back-up features to prevent such an occurrence.

Xicor's products are not authorized for use as critical components in life support devices or systems.

1. Life support devices or systems are devices or systems which, (a) are intended for surgical implant into the body, or (b) support or sustain life, and whose failure to perform, when properly used in accordance with instructions for use provided in the labeling, can be reasonably expected to result in a significant injury to the user.
2. A critical component is any component of a life support device or system whose failure to perform can be reasonably expected to cause the failure of the life support device or system, or to affect its safety or effectiveness.

Xicor

ORDERING INFORMATION

XICOR SERIAL E²PROMs

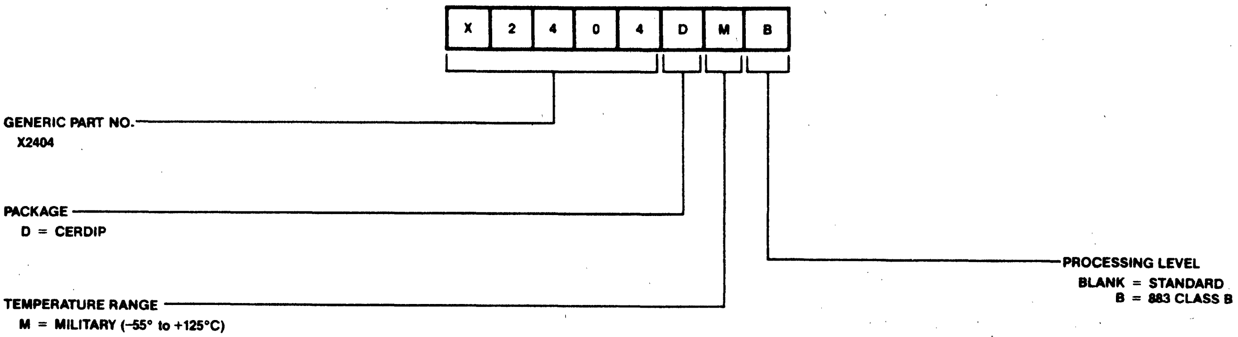
X
2
4
0
4
D
M
B
GENERIC PART NO.
X2404
PACKAGE
D = CERDIP
TEMPERATURE RANGE
M = MILITARY (−55° to +125°C)
PROCESSING LEVEL
BLANK = STANDARD
B = 883 CLASS B

XICOR E²PROMs

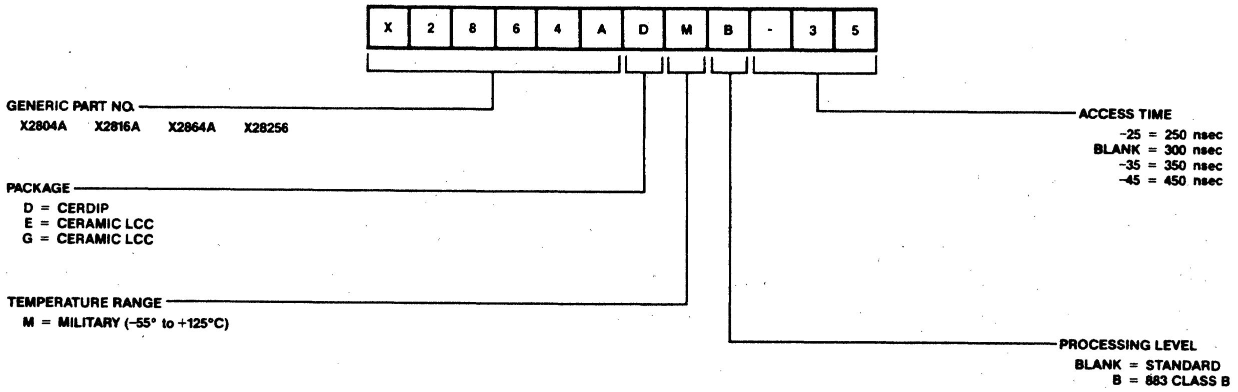
X
2
8
6
4
A
D
M
B
-
3
5
GENERIC PART NO.
X2804A X2816A X2864A X28256
PACKAGE
D = CERDIP
E = CERAMIC LCC
G = CERAMIC LCC
TEMPERATURE RANGE
M = MILITARY (−55° to +125°C)
ACCESS TIME
-25 = 250 nsec
BLANK = 300 nsec
-35 = 350 nsec
-45 = 450 nsec
PROCESSING LEVEL
BLANK = STANDARD
B = 883 CLASS B

LIMITED WARRANTY

Devices sold by Xicor, Inc. are covered by the warranty and patent indemnification provisions appearing in its Terms of Sale only. Xicor, Inc. makes no warranty, express, statutory, implied, or by description regarding the information set forth herein or regarding the freedom of the described devices from patent infringement. Xicor, Inc. makes no warranty of merchantability or fitness for any purpose. Xicor, Inc. reserves the right to discontinue production and change specifications and prices at any time and without notice.

Xicor, Inc. assumes no responsibility for the use of any circuitry other than circuitry embodied in a Xicor, Inc. product. No other circuits, patents, licenses are implied.

LIFE RELATED POLICY

In situations where semiconductor component failure may endanger life, system designers using this product should design the system with appropriate error detection and correction, redundancy and back-up features to prevent such an occurrence.

Xicor's products are not authorized for use as critical components in life support devices or systems.

1. Life support devices or systems are devices or systems which, (a) are intended for surgical implant into the body, or (b) support or sustain life, and whose failure to perform, when properly used in accordance with instructions for use provided in the labeling, can be reasonably expected to result in a significant injury to the user.
2. A critical component is any component of a life support device or system whose failure to perform can be reasonably expected to cause the failure of the life support device or system, or to affect its safety or effectiveness.

WHAT'S NEW IN IC Updates

IF YOU NEED THE IC MASTER YOU NEED IC MASTER UPDATES

Updates your IC Master
THREE (3) TIMES a year
SPRING, SUMMER
and FALL

If you're not getting them,
call us today:
WEST 408/249-6800
EAST 516/227-1300

IS THIS A BORROWED COPY?

Avoid the hassle and order your own personal two-volume set of IC MASTER. It's the surest way to simplify your IC selection efforts.

Only IC MASTER allows you to examine and compare the specifications, relative strengths, and weaknesses of all devices in serious contention for your application. And only IC MASTER brings you actual manufacturers' data sheets, allowing you to make complete and definitive device selections.

You can order IC MASTER simply by charging it to your VISA or Master Card credit card. To place your order (USA only) call now: (408) 249-6800/(516) 227-1300. To order outside the USA, see list of authorized IC MASTER distributors on page 1471 of Vol. I.

WHAT'S NEW IN IC MASTER

DON'T MISS THE EXPANDED CUSTOM/ SEMICUSTOM IC SECTION

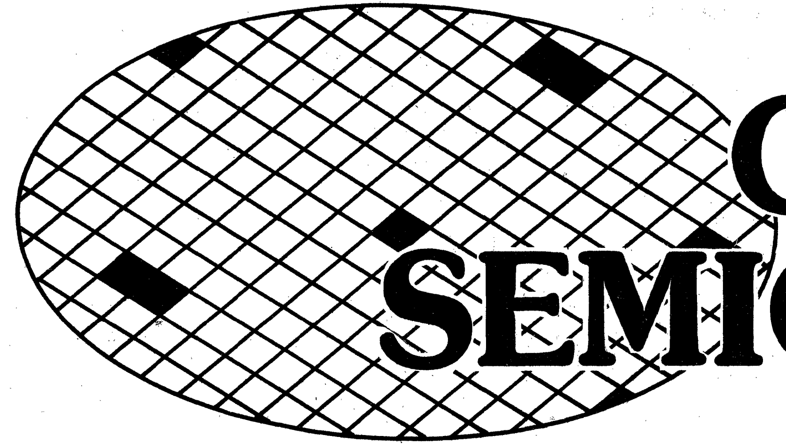

Lists software design tools available for Programmable Logic Devices, Gate Arrays, Standard Cells, and Linear and Linear/ Digital Arrays. Major macros in VLSI/LSI Macrocell Libraries are listed by source.

Volume II, page 4401

WHAT'S NEW IN IC MASTER

DON'T MISS THE NEW DESIGN AUTOMATION IC SECTION

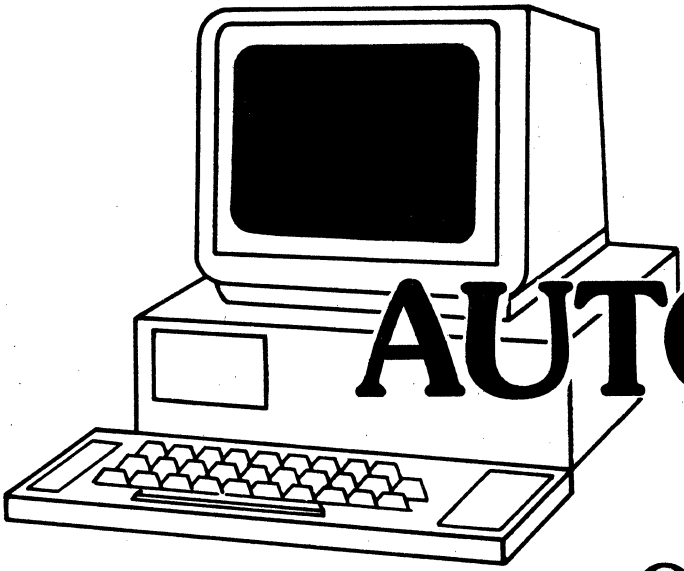

Quick and easy way to determine relationships between workstations, computers, software, semicustom manufacturers and CAE/CAD providers.

Volume II, page 4901

WHAT'S NEW IN IC MASTER

DON'T MISS THE NEW DIGITAL SIGNAL PROCESSING IC SECTION

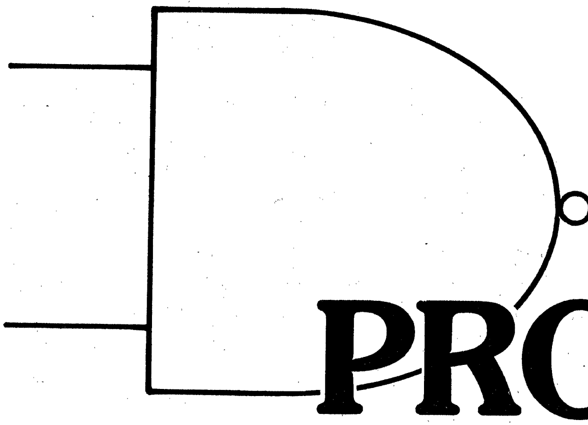

Easy to find DSP devices.

Volume I, Page 801

WHAT'S NEW IN IC MASTER

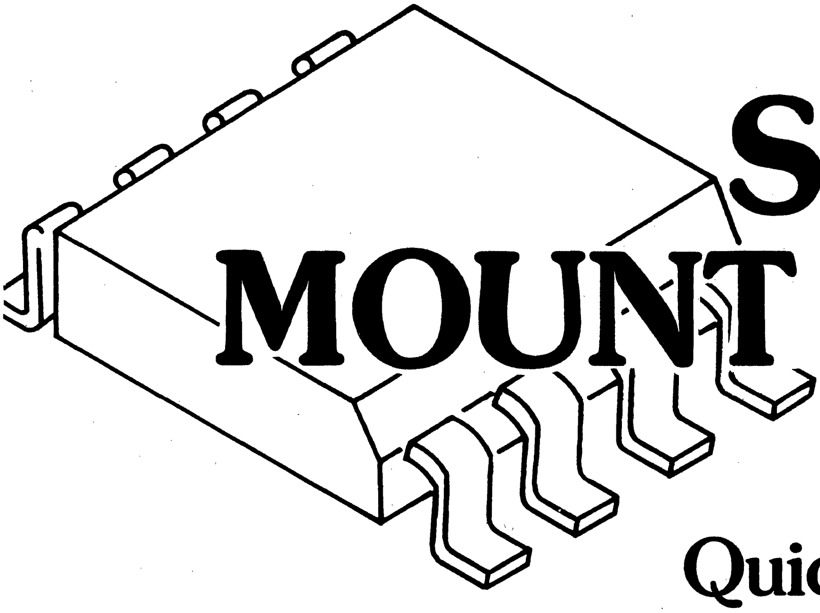

DON'T MISS THE NEW SURFACE MOUNT DEVICE IC SECTION

Quickly shows you by base number and package, what surface mount devices are available and from which manufacturers.

Volume II, Page 5201

NEED MORE PRODUCT DETAILS

Use the IC MASTER's NEW Telemarketing response system to request additional product information from IC manufacturers and CAE/CAD providers. CALL **800 443-0100 (EXT.) 518**

48 hour turn-around on your request . . . 24 hours a day, 7 days a week service.

TOSHIBA.
THE POWER IN MOS ICs.

For years Toshiba has been the power in MOS ICs. Leaders in static RAMs, 256K DRAMs and ROMs. The world's second largest producer of CMOS logic and 4-bit MPUs. A volume producer of gate arrays and custom products. And now, as the world moves from NMOS to CMOS, guess who has the experience, the technology and the production capacity to lead the way? The people with the power, the #1 CMOS manufacturer in the world. Toshiba.

TOSHIBA IS MEMORY POWER

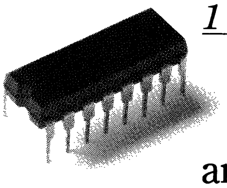

1 Mb Dynamic RAMs

We're a leader in volume production of 1 Mb DRAMs and also 256K DRAMs. If you are thinking powerful memory, talk with us.

Static RAMs in NMOS and CMOS

We make a really fast 2K x 8 static RAM — 35 ns. And we were first to introduce the 8K x 8 CMOS static RAM. Today we lead the industry in byte wide memory products with the 32K x 8 (256K) CMOS static RAM now available!

ROMs in NMOS and CMOS

We developed the 256K ROM, and within a year of its introduction, we were supplying over 50% of worldwide demand. In CMOS we created and are now producing in volume the 1Mb high-speed CMOS mask ROM.

EPROMs in NMOS and CMOS

Toshiba was first in the world to introduce the 256K CMOS EPROM. And we can meet all your EPROM needs today with high density products that can accommodate an entire utility program.

TOSHIBA IS MPU POWER

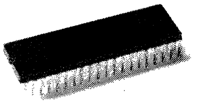

Toshiba offers a CMOS Z-80® MPU and peripherals that are hardware and software compatible with the Z-80 family, and they are second sourced.

In addition, we have high volume production now on CMOS and NMOS 8048 and 8049 products. We're also in volume production with the 8085 and peripherals. In fact, Toshiba has one of the world's most comprehensive lines of CMOS and NMOS MPUs.

TOSHIBA IS LOGIC POWER

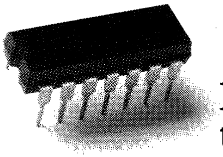

In 1980 Toshiba introduced the first high-speed CMOS logic series in the industry. Today we are #2 worldwide in the production of CMOS logic.

Our new 74HC series has an operating speed 30 times greater than standard CMOS logic, with low power requirements, wide voltage ranges and high noise immunity.

TOSHIBA IS PRODUCTION POWER FOR STANDARD CELLS, GATE ARRAYS & CUSTOM PRODUCTS.

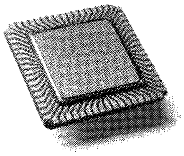

Toshiba has ample design capability at its design centers, so with our experience, LDS™ software and applications staff, you can develop your own.

More importantly, we have the volume production capability to meet your needs.

Toshiba. The power in design, development and production. In memories, MPUs, logic, custom and semicustom. If you're working in MOS, meet the people with the power. Meet Toshiba.

TOSHIBA AMERICA, INC.
2692 Dow Avenue, Tustin, CA 92680

® Z80 is a trademark of Zilog Inc.

LDS is a trademark of LSI Logic Corporation.

IRREFUTABLE LOGIC.

You've probably heard a lot lately about advanced bipolar logic technologies. Some of them claiming to be an even more logical choice than FAST.™ So we'd like to set the record straight.

The fact is, FAST's 3ns speed, 4mW power, and spec consistency put it in a class by itself. That's why it's the irrefutable choice of design engineers in commercial and military industries the world over. And it's supported by two major semiconductor manufacturers as second sources.

The constantly growing FAST family offers a broad product line of the most popular, useful functions: well over 100 SSI, MSI, and LSI devices. We also provide thorough technical support–with a FAST data book, applications handbook, dedicated sales force, and access to our high-technology Fairtech Centers. Not to mention off-the-shelf delivery, from each and every Fairchild sales office or authorized distributor.

We offer all the processing options you need. Such as additional burn-in and special marking. Packaging in DIPs, flatpaks, and SOICs, with PLCCs on the way. And we stock one of the widest varieties of JAN-qualified parts.

So the next time you're trying to decide between advanced logic technologies, reach for the red book on your shelf and check our specs. Or call The Fairchild Information Center, 1-800-554-4443, for more information.

We're convinced you'll choose FAST.

It's logic of a higher order.

We're taking the high ground.

FAIRCHILD

A Schlumberger Company

FAST (Fairchild Advanced Schottky TTL) is a trademark and the FAST logo is a registered trademark of Fairchild Semiconductor Corporation. © Copyright 1985 Fairchild Semiconductor Corporation.

See the FAST Product line in Volume I on pages 1011-1057.

INTRODUCTION TO DIGITAL

The Master Selection Guide provides information for making initial product selections. Digital devices are listed by major product families: CMOS, ECL, GaAs, or TTL, and within them by functional groups: arithmetic, buffers, inverters, etc. The adjacent table shows how these families and functional groups are organized. Other digital circuits not in the major logic families are listed under the general heading Digital-Special.

A separate guide for circuits specifically directed to Digital Signal Processing (DSP) applications is included within the Digital section; the table below shows how this information is organized. Some of these circuits may also be repeated in the Digital families, the Interface, or Microprocessor portions of IC Master.

The Master Selection Guide charts assist you in finding specific ICs to fill your requirements. This selection information is complemented by specific device data sheets provided by the various IC manufacturers. These data sheets are located following the digital product selection guides and are referenced by page number beside the individual part entries.

Note: A few digital devices, such as watch, clock, speech and music circuits, are not covered in the digital section, but covered in detail in the Linear-Consumer guide. For further assistance on locating functions, topics or key words, consult the MSG Function Index at the beginning of this volume.

DSP Topics

Arithmetic Functions
Converters, A/D
Converters, D/A
Processors
Registers
Miscellaneous

Digital Logic Topics

	CMOS	10K ECL	100K ECL	111 ECL	GaAs	HNIL/ HTL	TTL
Arithmetic Functions	X	X	X			X	X
Buffers	X	X	X		X	X	X
Inverters	X	X				X	X
Counters							
Binary	X	X	X	X	X	X	X
Decade	X	X				X	X
Miscellaneous	X						X
Decoders	X	X	X		X	X	X
Drivers	X	X	X		X	X	X
Flip-Flops							
D-Type	X	X	X	X	X	X	X
J-K	X	X				X	X
R-S Type				X		X	
Gates							
AND	X	X			X	X	X
NAND	X				X	X	X
AND-OR	X	X	X				X
AND-OR-Invert	X	X	X			X	X
OR	X	X		X		X	X
NOR	X	X		X	X	X	X
OR/NOR		X	X	X	X		X
Exclusive OR	X	X		X		X	X
Exclusive NOR	X			X			X
Exclusive OR/NOR		X	X				
Miscellaneous	X					X	X
Latches	X	X	X	X		X	X
Memories	X	X	X				X
Multiplexers (Digital)	X	X	X		X	X	X
Multivibrators	X	X		X		X	X
Oscillators/Dividers	X						
Shift Registers	X	X	X	X	X	X	X
Transceivers, Bus							X
Translators	X	X	X			X	X
Miscellaneous	X	X	X	X	X	X	X

Detailed Product Information provided by:

Analog Devices	1002
Circuit Technology Inc.	1009
Fairchild Camera & Instrument	1011
GigaBit Logic	1063
Goldstar Semiconductor	1066
Harris	1068
Integrated Device Technology	1078
Intersil	1089
Lattice Semiconductor	1092
LSI Computer	1099
Monolithic Memories	1100
Motorola Semiconductor	1120
NCR Microelectronics	1134
Panasonic	1136
RCA Solid State	1144
Samsung Semiconductor	1153
Signetics	1155
Texas Instruments Digital	1211
Toshiba America	1363
VTC Inc.	1367

The manufacturers listed above have provided detailed information on their latest and most significant products.

EINFÜHRUNG DIGITAL-SCHALTUNGEN

Der Master Selection Guide für Digitalschaltungen enthält alle Informationen, die Sie für die Erstauswahl Ihres Produkts benötigen. Die Bauteile, die in diesem Abschnitt erscheinen, sowohl im Selection Guide als auch auf den Datenblättern, sind in allen Master Indexes enthalten.

Die ersten beiden Seiten des Digital-Teils beinhalten Leistungs-vergleiche der wichtigsten Digitalfamilien. Daran anschließend finden Sie ein Verzeichnis der Bauteile jeder Familie nach Funktionen (arithmetische Funktionen, Buffers/Inverters usw.). Diesen Listen folgen die Datenblätter der Hersteller. Der Master Selection Guide verweist jeweils auf das entsprechende Datenblatt.

Einige Digital-Schaltungen (Rechner, Uhren-Chips und elektronische Orgel-Schaltungen), die in diesem Teil nicht enthalten sind, werden ausführlich im Abschnitt Linear-Consumer behandelt. Digital-Schaltungen, die nicht in einer der größeren Logik-Familien enthalten sind, finden sich unter der Rubrik "Digital-Sonstige Bauteile" (Digital — Other Devices).

Dieser Abschnitt wird nicht durch Hinweise auf Gehäuseformen Kompliziert. Die entsprechenden Suffix wurden meistens weggelassen. Weitere Information über die Suffixe jedes Herstellers erhalten Sie über das Numerische Typenverzeichnis. Im ganzen Master Selection Guide sind alle Bauteile mit militärischem Temperaturebereich (—55° bis 125°C) durch ein Kreuz (†) vor dem Namen des Herstellers gekennzeichnet. Die Namen der Hersteller sind normalerweise ausgerschrieben; einige jedoch sind abgekurst. Die Abkürzungen werden auf S. 902 erklärt.

INTRODUCTION AU SYSTEME DIGITAL

Le Guide Général de Sélection fournit suffisamment de renseignements pour permettre des selections initiales de produits. Tous les appareils énumérés dans cette Section, à la fois dans le Premier Guide de Sélection et le feuilles de données, apparaissent également dans tous les autres index.

Les deux premières pages de la Section "Digital" présentent des comparaisons de performance entre les principales familles de système digital. Suivent ensuite des listes d'appareils de chaque famille, classés par groupes fonctionnels (arithmétique, registres, invertisseurs, etc.). Les listes de première sélection sont suivies par des feuilles de données par appareil, fournies par les fabricants. Les références de numéros de pages de ces données sont communiquées dans les listes de première sélection.

Quelques circuits digitaux — calculatrices, circuits de montre, et circuits électroniques primaires — no signalés dans cette Section, sont étudiés en detail dans la Section "Linéaire". Les circuits digitaux non inclus dans l'une des familles princiaples de Legique, sont énumérés dans la rubrique "Autres Systemes Digitaux" (Digital-Other Devices).

Cette Section ne fait pas apparaître les types de boitier. Les suffixes indiquant les types de boitier sont généralement omis. Pour obtenir des renseignements supplémentaires sur les suffixes utilsés par chaque société, veuillez vous reporter au Guide des Numéros de Pièces. Dans tout le Guide Général de Sélection chaque appareil possédant la variante complète de température imposée par l'Armée (—55°C à 125°C) est indiqué par le symbole (†) inscrit devant le nom du fabricant. Les noms des fabricants sont généralement écrits en entier, il arrive cependant que certains soient abrégés. Voir page 902 pour obtenir la signification de ces abréviations.

INTRODUCCIÓN A DIGITAL

La Guía Maestra de Selección provee suficiente información para hacer selecciones iniciales de producto. Todas las componentes que aparecen en esta sección, ya sea en la guía de selección inicial o en las páginas de datos, están incluidas en todos los otros índices.

Las primeras dos páginas de la sección digital presenta comparación de funcionamiento entre las familias digitales mayores. Estas están sequidas por listas de las componentes correspondiente a cada familia y organizadas en grupos funcionales (aritmético, separadores, invertidores, etc). Las listas de selección inicial están sequidas por las páginas de datos, de las componentes proveídas por los fabricantes. Referencias del número de la página a estas páginas de datos están dadas con las listas de selección incial.

Algunos circuitos digitales — calculadoras, circuitos integrados de relojes, y circuitos de órganos eléctricos — no incluídas en esta sección son detalladas en la sección de Consumidor-Lineal. Los circuitos digitales no incluídos entre las familias lógicas mayores aparecen bajo el título Digital-Otras Componentes.

Esta sección no es complicada por referencias al estilo constructivo; los sufijos que denotan estilo constructivo han sido generalmente omitidos. Para información adicional sobre sufijos de las compañías, refiérase a la Guía de Número de Pieza. A lo largo de la Guía de Selección Maestra, cada intérvalo completo de temperatura para uso militar (—55° a 125°C) de la componente aparece indicada por el signo fabricantes no son generalmente deletreados; sin embargo, algunos aparecen abreviados y las abreviaturas son explicadas en la página 902.

ディジタルへの案内

マスターセレクションガイドは最初の製品選択には充分の資料を揃えています。本セレクション中のセレクションガイドとデータののっているページに記載されている全製品は他の全てのインデックスにも入っています。

ディジタルセレクションの最初の２ページには主要なディジタルファミリーの性能比較がのっています。次のページからはそのファミリーが機能グループ毎に分類されています（例えばアリスメティック，バッファ／インバータ…と云うように）。その次にのせてあるのは各メーカーのデータシートです。このデータシートを見つけるにはセレクションガイドにのっているページをめくって下さい。

カルキュレーター用，時計用チップ，電子オルガン用回路はこのセクションでなく，リニアーコンシューマーセクションに詳細に紹介されています。

このセクションではパッケージにはふれていません。パッケージ形状のサフィックスについての情報は“パーツナンバーガイド”を参照して下さい。
マスターセレクションガイドの全ページ，ミリタリー温度範囲（－５５℃～－１２５℃）の製品は剣じるし（　）をメーカー名の前につけてあります。メーカー名は通常簡略化はしていません。簡略化されているものについては1902ページにその説明があります。

Arithmetic Functions

Function	Device	Source		Line
Adder				
HC	**CD54HC583**	† **RCA**	**(1150)**	
	CD74HC583	**RCA**	**(1150)**	
	74HC583	**Signetics**	**(1159)**	
HCT	**CD54HCT583**	† **RCA**	**(1150)**	
	CD74HCT583	**RCA**	**(1150)**	5
	74HCT583	**Signetics**	**(1159)**	
Adder, NBCD (natural binary coded decimal)				
4XXX	**MC14560BA**	† **Motorola**	**(1132)**	
	MC14560BC	**Motorola**	**(1132)**	
	TC4560B	**Toshiba**	**(1363)**	
Adder, Triple Serial, Negative Logic, with Internal Carry				
4XXX	**MC14038BA**	† **Motorola**	**(1132)**	10
	MC14038BC	**Motorola**	**(1132)**	
	CD4038A	† **RCA**	**(1147)**	
	CD4038AE	**RCA**	**(1147)**	
	CD4038B	† **RCA**	**(1147)**	
	CD4038BE	**RCA**	**(1147)**	15
	HCC4038B	† SGS		
	HCF4038B	SGS		
	CM4038A	† Solitron		
	CM4038AE	Solitron		
	TC4038B	**Toshiba**	**(1363)**	20
Adder, Triple Serial, Positive Logic, with Internal Carry				
4XXX	**MC14032BA**	† **Motorola**	**(1132)**	
	MC14032BC	**Motorola**	**(1132)**	
	CD4032A	† **RCA**	**(1147)**	
	CD4032AE	**RCA**	**(1147)**	
	CD4032B	† **RCA**	**(1147)**	25
	CD4032BE	**RCA**	**(1147)**	
	HCC4032B	† SGS		
	HCF4032B	SGS		
	CM4032A	† Solitron		
	CM4032AE	Solitron		30
	TC4032B	**Toshiba**	**(1363)**	
Adder, 2-Bit Binary				
HC	SP74HC82	SPI		
Adder, 4-Bit, Full				
C	MM54C83	† National		
	MM74C83	National		
HC	54HC283	† Fairchild		35
	74HC283	Fairchild		
	GD74HC283	† **Goldstar**	**(1066)**	
	HD74HC283	Hitachi		
	HD74HC83	Hitachi		
	M74HC283	† Mitsubishi		40
	MC54HC283	† **Motorola**	**(1132)**	
	MC74HC283	**Motorola**	**(1132)**	
	MM54HC283	† National		
	MM74HC283	National		
	CD54HC283	† **RCA**	**(1150)**	45
	CD74HC283	**RCA**	**(1150)**	
	SP74HC83	SPI		
	M74HC283	SGS		
	74HC283	**Signetics**	**(1158)**	
	SN74HC283	TI		50
	TC74HC283	**Toshiba**	**(1363)**	
	US74HC283	Universal		
HCT	**CD54HCT283**	† **RCA**	**(1150)**	
	CD74HCT283	**RCA**	**(1150)**	
	74HCT283	**Signetics**	**(1158)**	55
4XXX	F4008BC	Fairchild		
	F4008BM	† Fairchild		
	MC14008BA	† **Motorola**	**(1132)**	
	MC14008BC	**Motorola**	**(1132)**	
	CD4008BC	National		60
	CD4008BM	† National		
	CD4008A	† **RCA**	**(704,1147)**	
	CD4008AE	**RCA**	**(704,1147)**	
	CD4008B	† **RCA**	**(704,1147)**	
			(Continued)	
Adder, 4-Bit, Full			(Cont'd)	
4XXX	**CD4008BE**	**RCA**	**(704,1147)**	
	HCC4008B	† SGS		65
	HCF4008B	SGS		
	HEF4008B	Signetics		
	CM4008A	† Solitron		
	CM4008AE	Solitron		
	883C4008B	† SSS		70
	BCL4008B	SSS		
	SCL4008B	SSS		
	TC4008B	**Toshiba**	**(1363)**	
Address Generator, 16 Bit with Look-Ahead Pipeline				
	ADSP-1410J	**AD**	**(1005)**	
	ADSP-1410K	**AD**	**(1005)**	75
	ADSP-1410S	† **AD**	**(1005)**	
	ADSP-1410T	† **AD**	**(1005)**	
Bit Multiplier, 2's Complement (12x12)				
	MPY012-1	IMI		
Bit Slice Correlator				
SOS	MA717	**CTI**	**(1009)**	80
Carry Generator				
AHCT	IDT54AHCT182	† IDT		
	IDT74AHCT182	† IDT		
FCT	IDT54FCT182	† IDT		
	IDT74FCT182	† IDT		85
HC	HD74HC182	Hitachi		
	CD54HC182	† **RCA**	**(1150)**	
	CD74HC182	**RCA**	**(1150)**	
	74HC182	**Signetics**	**(1157)**	
	SN74HC182	TI		90
	TC74HC182	**Toshiba**	**(1363)**	
HCT	**CD54HCT182**	† **RCA**	**(1150)**	
	CD74HCT182	**RCA**	**(1150)**	
	74HCT182	**Signetics**	**(1157)**	
Comparators, Address, 12-Bit to 4-Bit				
AHCT	**KS74AHCT679**	**Samsung**	**(1153)**	95
	KS74AHCT680	**Samsung**	**(1153)**	
HC	SN74HC679	TI		
	SN74HC680	TI		
Comparators, Address, 16-Bit to 4-Bit				
HC	SN74HC677	TI		
	SN74HC678	TI		100
Data Access Register (for memory address arithmetic)				
4XXX	F4707BC	Fairchild		
	F4707BM	† Fairchild		
Data Path Switch				
4XXX	F4704BC	Fairchild		
	F4704BM	† Fairchild		
Equality Comparator, 8-Bit				
HC	54HC688	† Fairchild		105
	74HC688	Fairchild		
	HD74HC688	Hitachi		
	CD54HC688	† **RCA**	**(1150)**	
	CD74HC688	**RCA**	**(1150)**	
	74HC688	† Signetics		110
	TC74HC688	**Toshiba**	**(1363)**	
	US74HC688	Universal		
HCT	HD74HCT688	Hitachi		
	74HCTR688	MicroTech		
	CD54HCT688	† **RCA**	**(1150)**	115
	CD74HCT688	**RCA**	**(1150)**	
	74HCT688	† Signetics		
Floating Point Arithmetic Unit (32-34-bit)				
	TMC3200	TRW-LSI		
Full Adder, Gated				
HC	SP74HC80	SPI		
Geometric Arithmetic Parallel Processor Corner-Turn Buffer (word serial/bit parallel to work parallel/bit serial shift register)	NCR45CT6	NCR		120
Geometric Arithmetic Parallel Processor Simulator/Assembler				
	NCR45GS2	**NCR**	**(1134)**	
Identity Comparator 4-Bit				
HC	**GD74HC85**	**Goldstar**	**(1066)**	
HCT	**GD74HCT85**	**Goldstar**	**(1066)**	
Identity Comparator 8-Bit				
AC	**54AC521**	† **Fairchild**	**(1012)**	
	74AC521	**Fairchild**		
			(1012,1015)	125
AHCT	**KS74AHCT688**	† **Samsung**	**(1153)**	
HC	54HC688	† Fairchild		
	74HC688	Fairchild		
	HD74HC682	Hitachi		
	HD74HC684	Hitachi		130
	HD74HC686	Hitachi		
	M74HC688	† Mitsubishi		
	MC54HC688	† **Motorola**	**(1131)**	
	MC74HC688	**Motorola**	**(1131)**	
	MM54HC688	† National		135
	MM74HC688	National		
	M74HC688	SGS		
	LR74HC688	† Sharp		
	SN54HC682	† **TI**	**(714)**	
	SN54HC684	† **TI**	**(714)**	140
	SN54HC688	† **TI**	**(714)**	
	SN74HC682	TI		
	SN74HC684	TI		
	SN74HC688	TI		
HCT	MM54HCT688	† National		145
	MM74HCT688	National		
Identity Comparator 8-Bit with Pullup Resistors				
AC	**54AC520**	† **Fairchild**	**(1012)**	
	74AC520	**Fairchild**		
			(1012,1015)	
Logic Register Stack				
4XXX	F4705BC	Fairchild		
	F4705BM	† Fairchild		150
Logic Unit, Floating Point, IEEE 754				
	ADSP-3220J	**AD**	**(1003)**	
	ADSP-3220K	**AD**	**(1003)**	
	ADSP-3220S	† **AD**	**(1003)**	
	ADSP-3220T	† **AD**	**(1003)**	
Logic Unit/Function Generator with Look-Ahead Carry, 4-Bit				
HCT	74HCT381	MicroTech		155
Logic Unit/Function Generator with Ripple Carry, 4-Bit				
HCT	25HCT2517	MicroTech		
	74HCT382	MicroTech		
Logic Unit 4-Bit				
HC	HD74HC181	Hitachi		
	HD74HC881	Hitachi		
	MC54HC181	† **Motorola**	**(1132)**	160
	MC74HC181	**Motorola**	**(1132)**	
	MM54HC181	† National		
	MM74HC181	National		
	CD54HC181	† **RCA**	**(1150)**	
	CD74HC181	**RCA**	**(1150)**	165
	M74HC181	SGS		
	74HC181	**Signetics**	**(1157)**	
	SN74HC181	TI		
	SN74HC381	TI		
	SN74HC881	TI		170
	TC74HC181	**Toshiba**	**(1363)**	
HCT	74HCTR181	MicroTech		
	CD54HCT181	† **RCA**	**(1150)**	
	CD74HCT181	**RCA**	**(1150)**	
	74HCT181	**Signetics**	**(1157)**	175
4XXX	**MC14581BA**	† **Motorola**	**(1132)**	
	MC14581BC	**Motorola**	**(1132)**	
	CD40181B	† **RCA**	**(1147)**	
			(Continued)	

† Military Temperature Range (−55° to 125°C)

* Typical Value

Bold face indicates additional data is provided on the page noted.

DIGITAL-CMOS (Cont'd)

Arithmetic Functions (Cont'd)

Function	Device	Source	Line
Logic Unit 4-Bit			
4XXX		(Cont'd)	
	CD40181BE	**RCA** (1147)	
	CD4057A	† **RCA** (1147)	
	HCC40181B	† SGS	
	HCF40181B	SGS	
	883C4581B	† SSS	5
	BCL4581B	SSS	
	SCL4581B	SSS	
Logic Unit, 4-Bit with Ripple Carry			
HC	SN74HC382	TI	
Logic Unit, 16-Bit Slice, 12 MHz			
	L429C01C	LogicDev	
	L429C01M	† LogicDev	10
Look-Ahead Carry Block			
HC	MM54HC182	† National	
	MM74HC182	National	
	SP74HC182	SPI	
	M74HC182	SGS	
HCT	74HCTR182	MicroTech	15
4XXX	F4582BC	Fairchild	
	F4582BM	† Fairchild	
	MC14582BA	† **Motorola** (1132)	
	MC14582BC	**Motorola** (1132)	
	CD40182B	† **RCA** (1147)	20
	CD40182BE	**RCA** (1147)	
	HCC40182	† SGS	
	HCF40182	SGS	
	883C4582B	† SSS	
	BCL4582B	SSS	25
	SCL4582B	SSS	
Magnitude Comparator 4-Bit			
C	MM54C85	† National	
	MM74C85	National	
HC	54HC85	† Fairchild	
	74HC85	Fairchild	30
	HD74HC85	Hitachi	
	M74HC85	Mitsubishi	
	MC54HC85	† **Motorola** (1131)	
	MC74HC85	**Motorola** (1131)	
	MM54HC521	† National	35
	MM54HC85	† National	
	MM74HC521	National	
	MM74HC85	National	
	MN74HC85	Panasonic	
	CD54HC85	† **RCA** (1150)	40
	CD74HC85	**RCA** (1150)	
	SP74HC85	SPI	
	M74HC85	SGS	
	LR74HC85	Sharp	
	74HC85	**Signetics** (1156)	45
	SN74HC85	TI	
	TC74HC85	**Toshiba** (1363)	
	US74HC85	Universal	
HCT	MM54HCT521	† National	
	MM74HCT521	National	50
	CD54HCT85	† **RCA** (1150)	
	CD74HCT85	**RCA** (1150)	
	74HCT85	**Signetics** (1156)	
4XXX	F40085BC	Fairchild	
	F40085BM	† Fairchild	55
	MC14585BA	† **Motorola** (1131)	
	MC14585BC	**Motorola** (1131)	
	MN4585B	† Panasonic	
	CD4063B	† **RCA** (1147)	
	CD4063BE	**RCA** (1147)	60
	CD4585B	† **RCA** (1147)	
	CD4585BE	**RCA** (1147)	
	HCC4063B	† SGS	
	HCF4063B	SGS	
		(Continued)	
Magnitude Comparator 4-Bit			
4XXX		(Cont'd)	
	HEF4585B	Signetics	65
	883C4585B	† SSS	
	BCL4585B	SSS	
	SCL4585B	SSS	
	TC4063B	**Toshiba** (1363)	
	TC4585B	**Toshiba** (1363)	70
Multiplier Accumulator (12x12)			
	ADSP-1009AJ	AD	
	ADSP-1009AK	AD	
	ADSP-1009AS	† AD	
	ADSP-1009AT	† AD	
	IDT7209L	**IDT** (1085,1088)	75
	IDT7209LB	† **IDT** (1085,1088)	
Multiplier/Accumulator (12x12)			
	LMA1009C	LogicDev	
	LMA1009M	LogicDev	
Multiplier Accumulator (16x16)			
	IDT7243LB	† **IDT** (1084,1088)	
Multiplier Accumulator, 16x16 bit			
	CY7C510C	Cypress	80
Multiplier Accumulator (16x16) 2's Complement and Unsigned Magnitude			
AC	**54AC1010**	† **Fairchild** (1012,1016)	
	74AC1010	**Fairchild** (1012,1016)	
ACT	**54ACT1010**	† **Fairchild** (1012,1016)	
	74ACT1010	**Fairchild** (1012,1016)	
Multiplier, Floating Point, IEEE 754			
	ADSP-3210J	**AD** (1002)	85
	ADSP-3210K	**AD** (1002)	
	ADSP-3210S	† **AD** (1002)	
	ADSP-3210T	† **AD** (1002)	
Multiplier, Serial, 8-Bit			
HC	CD54HC384	† RCA	
	CD74HC384	RCA	90
	74HC384	Signetics	
Multiplier, Unsigned Magnitude (8x8)			
	LMU8UC	† LogicDev	
	LMU8UM	† LogicDev	
Multiplier, 2's Complement and Unsigned Magnitude			
(12x12)	LMU12C	† LogicDev	
	LMU13C	† LogicDev	95
Multiplier, 2's Complement and Unsigned Magnitude			
(16x16)	LMU16C	† LogicDev	
	LMU17C	† LogicDev	
Multiplier, 2's Complement and Unsigned Magnitude (8x8)			
	LMU557C	LogicDev	
	LMU557M	† LogicDev	
	LMU558C	LogicDev	100
	LMU558M	† LogicDev	
Multiplier, 2's Complement (8x8)			
	LMU08C	† LogicDev	
Multiplier (2x2) Parallel			
4XXX	**MC14554BA**	† **Motorola** (1132)	
	MC14554BC	**Motorola** (1132)	
Multiplier (8x8) Divider (16 ÷ 8)			
	MSM6203	OKI	105
	MSM80C58	OKI	
Multiplier (8x8) Unsigned Magnitude			
	ADSP-1081AJ	**AD** (1007)	
	ADSP-1081AK	**AD** (1007)	
	ADSP-1081AS	† **AD** (1007)	
	ADSP-1081AT	† **AD** (1007)	110
Multiplier (8x8) 2's Complement			
	ADSP-1080AJ	**AD** (1007)	
	ADSP-1080AK	**AD** (1007)	
	ADSP-1080AS	† **AD** (1007)	
	ADSP-1080AT	† **AD** (1007)	
Multiplier, (8x8) 2's Complement			
	LMU08M	† LogicDev	115
Multiplier (12x12)	**IDT7212L**	**IDT** (1087,1088)	
	IDT7212LB	† **IDT** (1087,1088)	
	IDT7213L	**IDT** (1087,1088)	
	IDT7213LB	† **IDT** (1087,1088)	
	LMU13M	† LogicDev	120
Multiplier (12x12) 2's Complement			
	ADSP-1012AJ	**AD** (1007)	
	ADSP-1012AK	**AD** (1007)	
	ADSP-1012AS	† **AD** (1007)	
	ADSP-1012AT	† **AD** (1007)	
Multiplier, (12x12) 2's Complement and Unsigned Magnitude	LMU12M	† LogicDev	125
Multiplier (12x12) 2's Complement and Unsigned Magnitude, Mixed Mode			
	MPY-12IMI	IMI	
Multiplier (16x16)			
AC	**54AC1016**	† **Fairchild** (1012,1016)	
	74AC1016	**Fairchild** (1012,1016)	
ACT	**54ACT1016**	† **Fairchild** (1016)	
	74ACT1016	**Fairchild** (1012,1016)	130
Multiplier (16x16) Common Clock			
AC	**54AC1017**	† **Fairchild** (1012,1016)	
	74AC1017	**Fairchild** (1012,1016)	
ACT	**54ACT1017**	† **Fairchild** (1012,1016)	
	74ACT1017	**Fairchild** (1012,1016)	
Multiplier (16x16) 2's Complement			
	ADSP-1016AJ	**AD** (1007)	135
	ADSP-1016AK	**AD** (1007)	
	ADSP-1016AS	† **AD** (1007)	
	ADSP-1016AT	† **AD** (1007)	
Multiplier (16x16) 2's Complement and Unsigned			
Magnitude	**IDT7216L**	**IDT** (1086,1088)	
	IDT7216LB	† **IDT** (1086,1088)	140
	IDT7217L	**IDT** (1086,1088)	
	IDT7217LB	† **IDT** (1086,1088)	
	L1016	**Lattice** (1093)	
	L1017	**Lattice** (1094)	
	LMU16M	† LogicDev	
	LMU17M	† LogicDev	
	TMC216H	TRW-LSI	145
Multiplier (16x16) 2's Complement and Unsigned			
Magnitude	WTL2517C	Weitek	
	WTL2517M	† Weitek	
Multiplier (16x16) 2's Complement and Unsigned Magnitude, Mixed Mode			
	MPY-16IMI	IMI	
Multiplier (16x16) 2's Complement, Unsigned or Mixed			
Operands	LMU18C	LogicDev	
	LMU18M	† LogicDev	150
Multiplier (24x24)	**ADSP-1024AJ**	**AD** (1007)	
	ADSP-1024AK	**AD** (1007)	
Multiplier-Accumulator (8x8)			
	ADSP-1008AJ	**AD** (1008)	
	ADSP-1008AK	**AD** (1008)	
	ADSP-1008AS	† **AD** (1008)	155
	ADSP-1008AT	† **AD** (1008)	

† Military Temperature Range (−55° to 125°C)

* Typical Value

Bold face indicates additional data is provided on the page noted.

Arithmetic Functions (Cont'd)

Function	Device	Source	Line
Multiplier-Accumulator (16x16)			
	ADSP-1010AJ	AD	
	ADSP-1010AK	AD	
	ADSP-1010AS	† AD	
	ADSP-1010AT	† AD	
	ADSP-1110AJ	**AD** (1006)	5
	ADSP-1110AK	**AD** (1006)	
	ADSP-1110AS	† **AD** (1006)	
	ADSP-1110AT	† **AD** (1006)	
	CY7C510	† Cypress	
	CY7C543	† Cypress	10
	IDT7210L	**IDT** (1084,1088)	
	IDT7210LB	† **IDT** (1084,1088)	
	IDT7243L	**IDT** (1084,1088)	
	L1010	**Lattice** (1092)	
	LMA1010C	LogicDev	15
	LMA1010M	† LogicDev	
	SN54THCT1010-100	† TI	
	SN54THCT1010-140	† TI	
	SN74THCT1010-100	TI	
	SN74THCT1010-140	TI	20
	SN74THCT9510	TI	
	THCT9510E	TI	
	THCT9510M	† TI	
	WTL2010C	Weitek	
	WTL2010M	† Weitek	25
Multiplier-Accumulator (16x16) Expandable			
	WTL2245C	Weitek	
	WTL2245M	† Weitek	
Multiplier-Accumulator (16x16) Multiply Only or Multiply-Accumulate Modes			
	WTL2044C	Weitek	
	WTL2044M	† Weitek	
Parity Generator and Checker, 9-Bit			
4XXX	**CD40101B**	† **RCA** (1147)	30
	CD40101BE	**RCA** (1147)	
	HCC40101B	† SGS	
	HCF40101B	SGS	
Parity Generator/Checker, 9-Bit Odd/Even			
HC	54HC280	† Fairchild	
	74HC280	Fairchild	35
	HD74HC280	Hitachi	
	MC54HC280	† **Motorola** (1132)	
	MC74HC280	**Motorola** (1132)	
	MM54HC280	† National	
	MM74HC280	National	40
	CD54HC280	† **RCA** (1150)	
	CD74HC280	**RCA** (1150)	
	SP74HC280	SPI	
	M74HC280	SGS	
	74HC280	**Signetics** (1158)	45
HCT	74HCTR280	MicroTech	
	CD54HCT280	† **RCA** (1150)	
	CD74HCT280	**RCA** (1150)	
	74HCT280	**Signetics** (1158)	
Priority Encoder, 10-Line Decimal to 4-Line BCD			
HC	M74HC147	Mitsubishi	50
	SN74HC147	TI	
Program Sequencer, 16 Bit with Look-Ahead Pipeline			
	ADSP-3220J	**AD** (1003)	
	ADSP-3220K	**AD** (1003)	
	ADSP-3220S	† **AD** (1003)	
	ADSP-3220T	† **AD** (1003)	55
Successive Approximation Register, 12-Bit (serial to parallel converter)			
HC	**SI25HC04C**	**Siliconix** (3249)	
Nines Complementer			
4XXX	**MC14561BA**	† **Motorola** (1132)	
	MC14561BC	**Motorola** (1132)	
	TC4561B	**Toshiba** (1363)	
8 to 3-Line Priority Encoder			
AHCT	**KS74AHCT148**	**Samsung** (1153)	60
HC	HD74HC148	Hitachi	
	M74HC148	Mitsubishi	
	SN74HC148	TI	

Buffers

Function	Device	Source	Line
Hex Non-Inverting, Dual Supply			
4XXX	BCL4504B	SSS	
	SCL4504B	SSS	65
Hex Non-Inverting-Improved			
HC	M74HC4050	Mitsubishi	
Nine Wide			
HC	MC54HC9035	† Motorola	
	MC74HC9035	Motorola	
HCT	MC54HCT9035	† Motorola	
	MC74HCT9035	Motorola	70
Nine Wide, Open Drain			
HC	MC54HC9135	† Motorola	
	MC74HC9135	Motorola	
Nine Wide Schmitt Trigger			
HC	MC54HC9015	† Motorola	
	MC74HC9015	Motorola	
Nine Wide Schmitt Trigger, Open Drain			
HC	MC54HC9115	† Motorola	75
	MC74HC9115	Motorola	
Quad Gated, Three-State			
HC	**GD74HC125**	**Goldstar** (1066)	
	HD74HC126	Hitachi	
	MC54HC125	† **Motorola** (1124)	
	MC54HC126	† **Motorola** (1124)	80
	MC74HC125	**Motorola** (1124)	
	MC74HC126	**Motorola** (1124)	
	CD54HC126	† **RCA** (1149)	
	CD74HC126	**RCA** (1149)	
	M74HC125	SGS	85
	M74HC126	SGS	
	74HC125	**Signetics** (1157)	
	74HC126	**Signetics** (1157)	
Quad Gated Three-State			
HC	**SN54HC125**	**TI** (714)	
	SN74HC125	TI	90
	SN74HC126	TI	
Quad Gated, Three-State			
HC	US74HC126	Universal	
HCT	HD74HCT126	Hitachi	
	MC54HCT125	† Motorola	
	MC54HCT126	† Motorola	95
	MC74HCT125	Motorola	
	MC74HCT126	Motorola	
	CD54HCT126	† **RCA** (1149)	
	CD74HCT126	**RCA** (1149)	
Quad Gated Three-State			
HCT	**74HCT125**	**Signetics** (1157)	100
Quad Gated, Three-State			
HCT	**74HCT126**	**Signetics** (1157)	
Quad, Inverted Control			
HCT	**GD74HCT125**	**Goldstar** (1066)	
Quad, (Inverted Control)			
HCT	US74HCT125	Universal	
	US74HCT126	Universal	
Quad Low Impedance			
4XXX	883C4441UB	† SSS	105
	BCL4441UB	SSS	
	SCL4441UB	SSS	
Quad True/Complement			
4XXX	F4041BC	Fairchild	
	F4041BM	† Fairchild	
	CD4041C	National	110
	CD4041M	National	
	CD4041A	† **RCA** (704,1145)	
	CD4041AE	**RCA** (704,1145)	
	CD4041UB	† **RCA** (704,1145)	
	CD4041UBE	**RCA** (704,1145)	115
	HCC4041UB	† SGS	
	HCF4041UB	SGS	
	HEF4041B	Signetics	
	CM4041A	† Solitron	
	CM4041AE	Solitron	120
	883C4041UB	† SSS	
	BCL4041UB	SSS	
	SCL4041UB	SSS	
Quad Gated Three-State			
HC	54HC125	† Fairchild	
Quad Gated, Three-State			
HC	74HC125	Fairchild	125
	HD74HC125	Hitachi	
Quad Gated Three-State			
HC	M74HC125	Mitsubishi	
	M74HC126	Mitsubishi	
	MM54HC125	† National	
	MM74HC125	National	130
	CD54HC125	† **RCA** (1149)	
Quad Gated, Three-State			
HC	**CD74HC125**	**RCA** (1149)	
Quad Gated Three-State			
HC	SP74HC125	SPI	
Quad Gated, Three-State			
HC	**TC74HC126**	**Toshiba** (1363)	
	US74HC125	Universal	135
HCT	HD74HCT125	Hitachi	
Quad Gated Three-State			
HCT	**CD54HCT125**	† **RCA** (1149)	
	CD74HCT125	**RCA** (1149)	
Quad, Three-State			
HC	**TC74HC125**	**Toshiba** (1363)	
Quad Gated, Three-State (Inverted Control)			
HC	MM54HC126	† National	140
	MM74HC126	National	
	SP74HC126	SPI	
Quad Three-State Non-Inverting			
5XXX	TC5024	Toshiba	
	TC5025	Toshiba	
Hex			
HC	54HC07	† Fairchild	145
	74HC07	Fairchild	
	GD74HC07	**Goldstar** (1066)	
	SN74HC4061	TI	
HCT	54HCT07	† Fairchild	
	74HCT07	Fairchild	150
	GD74HCT07	**Goldstar** (1066)	
	TC74HCT07	Toshiba	
Hex CMOS Compatible			
	DS1630	† National	
	DS3630	National	
Hex High Voltage			
5XXX	TC5064B	Toshiba	155
	TC5065B	Toshiba	
Hex (Inverting)			
4XXX	CD4009AC	National	
	CD4009AM	† National	
	CD4009A	† **RCA** (704,1145)	
	CD4009AE	**RCA** (704,1145)	160
	CD4009UB	† **RCA** (704,1145)	
	CD4009UBE	**RCA** (704,1145)	

(Continued)

† Military Temperature Range (−55° to 125°C)

* Typical Value

Bold face indicates additional data is provided on the page noted.

DIGITAL-CMOS (Cont'd)

Function	Device	Source	Line
Buffers		**(Cont'd)**	
Hex (Inverting)			
4XXX		(Cont'd)	
	CM4009A	† Solitron	
	CM4009AE	Solitron	
	883C4009UB	† SSS	
	BCL4009UB	SSS	
	SCL4009UB	SSS	5
	TC4009UB	**Toshiba (1363)**	
Hex (Inverting) Three-State, Strobed			
4XXX	**MC14502BA**	**† Motorola (1124)**	
	MC14502BC	**Motorola (1124)**	
	CD4502B	**† RCA (704,1145)**	
	CD4502BE	**RCA (704,1145)**	10
	HCC4502B	† SGS	
	HCF4502B	SGS	
	HEF4502B	Signetics	
	883C4502B	† SSS	
	BCL4502B	SSS	15
	SCL4502B	SSS	
	TC4502B	**† Toshiba (1363)**	
Hex (Inverting)-Improved			
	TC50H000	**Toshiba (1363)**	
HC	54HC4049	† Fairchild	
	74HC4049	Fairchild	20
	MC54HC4049	**† Motorola (1124)**	
	MC74HC4049	**Motorola (1124)**	
	MM54HC4049	† National	
	MM74HC4049	National	
	MN74HC4049	Panasonic	25
	CD54HC4049	† RCA	
	CD74HC4049	**RCA (1149)**	
	M74HC4049	SGS	
	74HC4049	**Signetics (1160)**	
	TC74HC4049	**Toshiba (1363)**	30
HCT	74HCT4049	Signetics	
4XXX	F4049BC	Fairchild	
	F4049BM	† Fairchild	
	MC14049UBA	**† Motorola (1124)**	
	MC14049UBC	**Motorola (1124)**	35
	CD4049UB	National	
	MN4049B	† Panasonic	
	CD4049A	**† RCA (704,1145)**	
	CD4049AE	**RCA (704,1145)**	
	CD4049UB	**† RCA (704,1145)**	40
	CD4049UBE	**RCA (704,1145)**	
	HCC4049UB	† SGS	
	HCF4049UB	SGS	
	HEF4049B	Signetics	
	CM4049A	† Solitron	45
	CM4049AE	Solitron	
	883C4049UB	† SSS	
	BCL4049UB	SSS	
	SCL4049UB	SSS	
	TC4049B	**Toshiba (1363)**	50
50HXXX	LR50H000	Sharp	
Hex Non-Inverting			
4XXX	CD4010A	National	
	CD4010A	**† RCA (704,1145)**	
	CD4010AE	**RCA (704,1145)**	
	CD4010B	**† RCA (704,1145)**	55
	CD4010BE	**RCA (704,1145)**	
	CM4010A	† Solitron	
	CM4010AE	Solitron	
	883C4010B	† SSS	
	BCL4010B	SSS	60
	SCL4010B	SSS	
	TC4010B	**Toshiba (1363)**	

Function	Device	Source	Line
Hex Non-Inverting-Improved			
HC	54HC4050	† Fairchild	
	74HC4050	Fairchild	
	MC54HC4050	**† Motorola (1124)**	65
	MC74HC4050	**Motorola (1124)**	
	MM54HC4050	† National	
	MM74HC4050	National	
	MN74HC4050	Panasonic	
	CD54HC4050	† RCA	70
	CD74HC4050	**RCA (1149)**	
	M74HC4050	SGS	
	74HC4050	**Signetics (1160)**	
	TC74HC4050	**Toshiba (1363)**	
HCT	74HCT4050	Signetics	75
4XXX	F4050BC	Fairchild	
	F4050BM	† Fairchild	
	MC14050BA	**† Motorola (1124)**	
	MC14050BC	**Motorola (1124)**	
	CD4050BC	National	80
	CD4050BM	National	
	MN4050B	† Panasonic	
	CD4050A	**† RCA (704,1145)**	
	CD4050AE	**RCA (704,1145)**	
	CD4050B	**† RCA (704,1145)**	85
	CD4050BE	**RCA (704,1145)**	
	HCC4050B	† SGS	
	HCF4050B	SGS	
	HEF4050B	Signetics	
	CM4050A	† Solitron	90
	CM4050AE	Solitron	
	883C4050B	† SSS	
	BCL4050B	SSS	
	SCL4050B	SSS	
	TC4050B	**Toshiba (1363)**	95
Hex Open Drain Active Pull Down			
C	MM54C906	† National	
	MM74C906	National	
Hex Open Drain Active Pull Up			
C	MM54C907	† National	
	MM74C907	National	
Hex PMOS Inverting (PMOS to CMOS or TTL)			
C	MM54C903	† National	100
	MM74C903	National	
Hex PMOS Non-Inverting (PMOS to CMOS or TTL)			
C	MM54C904	† National	
	MM74C904	National	
Hex TTL Inverting (CMOS to TTL)			
C	MM54C901	† National	
	MM74C901	National	105
Hex TTL Non-Inverting (CMOS to TTL)			
C	MM54C902	† National	
	MM74C902	National	
Hex Three-State	MM70C95	† National	
	MM70C97	† National	
	MM80C95	National	110
	MM80C97	National	
AHCT	**KS74AHCT365**	**Samsung (1153)**	
HC	54HC365	† Fairchild	
	54HC367	† Fairchild	
	74HC365	Fairchild	115
	74HC367	Fairchild	
	GD74HC365	**Goldstar (1066)**	
	GD74HC367	**Goldstar (1066)**	
	HD74HC365	Hitachi	
	HD74HC367	Hitachi	120
	M74HC365	Mitsubishi	
	MC54HC365	**† Motorola (1124)**	
	MC54HC367	**† Motorola (1124)**	
	MC74HC365	**Motorola (1124)**	
	MC74HC367	**Motorola (1124)**	125
	MM54HC365	† National	
		(Continued)	

Function	Device	Source	Line
Hex Three-State			
HC		(Cont'd)	
	MM54HC367	† National	
	MM74HC365	National	
	MM74HC367	National	
	MN74HC365	Panasonic	130
	MN74HC367	Panasonic	
	CD54HC365	**† RCA (1149)**	
	CD54HC367	**† RCA (1149)**	
	CD74HC365	**RCA (1149)**	
	CD74HC367	**RCA (1149)**	135
	SP74HC365	SPI	
	SP74HC367	SPI	
	M74HC365	SGS	
	M74HC367	SGS	
	74HC365	**Signetics (1158)**	140
	74HC367	**Signetics (1158)**	
	SS54HC365	† SSS	
	SS74HC365	SSS	
	SN54HC365	**† TI (714)**	
	SN74HC365	TI	145
	TC74HC365	**Toshiba (1363)**	
	TC74HC367	**Toshiba (1363)**	
	US74HC365	Universal	
	US74HC367	Universal	
HCT	**GD74HCT365**	**Goldstar (1066)**	150
	GD74HCT367	**Goldstar (1066)**	
	CD54HCT365	**† RCA (1149)**	
	CD54HCT367	**† RCA (1149)**	
	CD74HCT365	**RCA (1149)**	
	CD74HCT367	**RCA (1149)**	155
	KS74HCTLS365	**Samsung (1153)**	
	KS74HCTLS367	**Samsung (1153)**	
	74HCT365	**Signetics (1158)**	
	74HCT367	**Signetics (1158)**	
	SS54HCT365	† SSS	160
	SS74HCT365	SSS	
	US74HCT365	Universal	
	ZX54HCT/LS365	† Zytrex	
	ZX54HCT/LS367	† Zytrex	
	ZX74HCT/LS365	Zytrex	165
	ZX74HCT/LS367	Zytrex	
4XXX	F40097BC	Fairchild	
	F40097BM	† Fairchild	
	MC14503BA	**† Motorola (1124)**	
	MC14503BC	**Motorola (1124)**	170
	CD4503BC	National	
	CD4503BM	† National	
	MN4503B	† Panasonic	
	CD4503BD	**† RCA (1145)**	
	CD4503BE	**RCA (1145)**	175
	HEF40097B	Signetics	
40HXXX	LR40H367	Sharp	
	TC40H365	**Toshiba (1363)**	
	TC40H367	**Toshiba (1363)**	
5XXX	TC5012B	Toshiba	180
Hex Three-State, Inverting			
AHCT	**KS74AHCT366**	**Samsung (1153)**	
	KS74AHCT368	**Samsung (1153)**	
HC	54HC366	† Fairchild	
	54HC368	† Fairchild	
	74HC366	Fairchild	185
	74HC368	Fairchild	
	HD74HC366	Hitachi	
	HD74HC368	Hitachi	
	M74HC366	Mitsubishi	
	M74HC368	Mitsubishi	190
	MC54HC366	**† Motorola (1124)**	
	MC54HC368	**† Motorola (1124)**	
	MC74HC366	**Motorola (1124)**	
	MC74HC368	**Motorola (1124)**	
	MM54HC366	† National	195
		(Continued)	

† Military Temperature Range (−55° to 125°C)

* Typical Value

Bold face indicates additional data is provided on the page noted.

DIGITAL-CMOS (Cont'd)

Buffers (Cont'd)

Function	Device	Source	Line
Hex Three-State, Inverting			
HC		(Cont'd)	
	MM54HC368	† National	
	MM74HC366	National	
	MM74HC368	National	
	MN74HC366	Panasonic	
	MN74HC368	Panasonic	5
	CD54HC366	**† RCA (1149)**	
	CD54HC368	**† RCA (1149)**	
	CD74HC366	**RCA (1149)**	
	CD74HC368	**RCA (1149)**	
	SP74HC366	SPI	10
	M74HC366	SGS	
	M74HC368	SGS	
	74HC366	**Signetics (1158)**	
	74HC368	**Signetics (1158)**	
	SN54HC366	**† TI (714)**	15
	SN54HC368	**† TI (714)**	
	SN74HC366	TI	
	SN74HC368	TI	
	TC74HC366	**Toshiba (1363)**	
	TC74HC368	**Toshiba (1363)**	20
	US74HC366	Universal	
	US74HC368	Universal	
HCT	**CD54HCT366**	**† RCA (1149)**	
	CD54HCT368	**† RCA (1149)**	
	CD74HCT366	**RCA (1149)**	25
	CD74HCT368	**RCA (1149)**	
	KS74HCTLS366	**Samsung (1153)**	
	KS74HCTLS368	**Samsung (1153)**	
	74HCT366	**Signetics (1158)**	
	74HCT368	**Signetics (1158)**	30
	US74HCT366	Universal	
	US74HCT368	Universal	
	ZX54HCT/LS366	† Zytrex	
	ZX54HCT/LS368	† Zytrex	
	ZX74HCT/LS366	Zytrex	35
	ZX74HCT/LS368	Zytrex	
4XXX	TC40368	Toshiba	
40HXXX	LR40H368	Sharp	
	TC40H366	**Toshiba (1363)**	
Octal Buffer/Level Translator, Inverting			
HC	MM54HC4305	National	40
	MM74HC4305	National	
Octal Buffer/Line Driver			
C	MM54C941	† National	
	MM74C941	National	
Octal Buffer/Line Driver, Three State			
AC	**54AC540**	**† Fairchild (1012,1014)**	
	54AC541	**† Fairchild (1012,1014)**	45
	74AC540	**Fairchild (1012,1014)**	
	74AC541	**Fairchild (1012,1014)**	
ACT	**V54ACT465**	**† VTC (1367,1370)**	
	V54ACT467	**† VTC (1367,1370)**	
	V54ACT541	**† VTC (1367,1370)**	50
	V74ACT465	**VTC (1367,1370)**	
	V74ACT467	**VTC (1367,1370)**	
	V74ACT541	**VTC (1367,1370)**	
AHCT	**KS74AHCT540**	**Samsung (1153)**	
HC	HD74HC540	Hitachi	55
	HD74HC541	Hitachi	
	M74HC540	Mitsubishi	
	MC54HC540	**† Motorola (1125)**	
	MC54HC541	**† Motorola (1125)**	
	MC74HC540	**Motorola (1125)**	60
	MC74HC541	**Motorola (1125)**	
		(Continued)	

Function	Device	Source	Line
Octal Buffer/Line Driver, Three State			
HC		(Cont'd)	
	CD54HC540	**† RCA (1149)**	
	CD54HC541	**† RCA (1149)**	
	CD74HC540	**RCA (1149)**	
	CD74HC541	**RCA (1149)**	65
	74HC540	Samsung	
	74HC541	Samsung	
	SP74HC540	SPI	
	SP74HC541	SPI	
	M74HC540	SGS	70
	M74HC541	SGS	
	74HC540	**Signetics (1159)**	
	74HC541	**Signetics (1159)**	
	SS54HC540	† SSS	
	SS54HC541	† SSS	75
	SS74HC540	SSS	
	SS74HC541	SSS	
	SN54HC540	**† TI (714)**	
	SN74HC540	TI	
	TC74HC540	**Toshiba (1363)**	80
	US74HC540	Universal	
	US74HC541	Universal	
HCT	54HCT540	† CTI	
	54HCT541	† CTI	
	74HCT540	CTI	85
	74HCT541	CTI	
	HD74HCT540	Hitachi	
	HD74HCT541	Hitachi	
	MIC74HCT540	Micrel	
	MIC74HCT541	Micrel	90
	74HCTR540	MicroTech	
	74HCTR541	MicroTech	
	MD54HCT540R	† Mitel	
	MD54HCT541R	† Mitel	
	MD74HCT540R	Mitel	95
	MD74HCT541R	Mitel	
	MC54HCT540	† Motorola	
	MC54HCT541	† Motorola	
	MC74HCT540	Motorola	
	MC74HCT541	Motorola	100
	MM54HCT540	† National	
	MM54HCT541	† National	
	MM74HCT540	National	
	MM74HCT541	National	
	MV74HCT540	Plessey	105
	MV74HCT541	Plessey	
	CD54HCT540	**† RCA (1149)**	
	CD54HCT541	**† RCA (1149)**	
	CD74HCT540	**RCA (1149)**	
	CD74HCT541	**RCA (1149)**	110
	KS74HCTLS540	**Samsung (1153)**	
	KS74HCTLS541	**Samsung (1153)**	
	SP74HCT540	SPI	
	SP74HCT541	SPI	
	M74HCT540	SGS	115
	M74HCT541	SGS	
	74HCT540	**Signetics (1159)**	
	74HCT541	**Signetics (1159)**	
	SS54HCT540	† SSS	
	SS54HCT541	† SSS	120
	SS74HCT540	SSS	
	SS74HCT541	SSS	
	54HCT541	† Supertex	
	74HCT540	Supertex	
	74HCT541	Supertex	125
	SN54HCT541	**TI (714)**	
	SN74HCT541	TI	
	TC74HCT540	**Toshiba (1363)**	
	ZX54HCT/LS540	† Zytrex	
	ZX54HCT/LS541	† Zytrex	130
	ZX74HCT540	Zytrex	
	ZX74HCT541	Zytrex	
		(Continued)	

Function	Device	Source	Line
Octal Buffer/Line Driver, Three State		(Cont'd)	
SC	SP74SC540	SPI	
	SP74SC541	SPI	
	74SC540	Supertex	135
	74SC541	Supertex	
Octal Buffer/Line Driver, Three-State			
HCT	54HCT540	† Supertex	
7-Line High Voltage			
5XXX	TC5066B	Toshiba	
	TC5067B	Toshiba	
10-Bit Buffer/Line Driver, Inverting			
ACT	**V54ACT828**	**† VTC (1367,1370,1374)**	140
	V74ACT828	**VTC (1367,1370,1374)**	
10-Bit Buffer/Line Driver, Non-Inverting			
ACT	**V54ACT827**	**† VTC (1367,1370,1374)**	
	V74ACT827	**VTC (1367,1370,1374)**	

Inverters

Function	Device	Source	Line
Hex			
HC	M74HC4049	Mitsubishi	
Nine Wide Buffer, TTL Logic Level			
HC	MC54HC9034	† Motorola	145
	MC74HC9034	Motorola	
HCT	MC54HCT9034	† Motorola	
	MC74HCT9034	Motorola	
Nine Wide, Open Drain			
HC	MC54HC9134	† Motorola	
	MC74HC9134	Motorola	150
Nine Wide Schmitt Trigger			
HC	MC54HC9014	† Motorola	
	MC74HC9014	Motorola	
Nine Wide Schmitt Trigger, Open Drain			
HC	MC54HC9114	† Motorola	
	MC74HC9114	Motorola	
Dual Complementary Pair Plus Inverter			
4XXX	F4007UBC	Fairchild	155
	F4007UBM	† Fairchild	
	MC14007UBA	**† Motorola (1124)**	
	MC14007UBC	**Motorola (1124)**	
	CD4007C	National	
	CD4007M	† National	160
	MN4007UB	† Panasonic	
	CD4007A	**† RCA (704,1145)**	
	CD4007AE	**RCA (704,1145)**	
	CD4007UB	**† RCA (704,1145)**	
	CD4007UBE	**RCA (704,1145)**	165
	HCC4007UB	† SGS	
	HCF4007UB	SGS	
	HEF4007UB	Signetics	
	CM4007A	† Solitron	
	CM4007AE	Solitron	170
	883C4007UB	† SSS	
	BCL4007UB	SSS	
	SCL4007UB	SSS	
	TC4007UB	**Toshiba (1363)**	
Hex	MM74PC04	National	175
AC	**54AC04**	**† Fairchild (1011,1013)**	
	74AC04	**Fairchild (1011,1013)**	
AHCT	**KS74AHCT04**	**Samsung (1153)**	
	KS74AHCT05	**Samsung (1153)**	
C	MM54C04	† National	180
	MM74C04	National	
		(Continued)	

† Military Temperature Range (−55° to 125°C)

* Typical Value

Bold face indicates additional data is provided on the page noted.

DIGITAL-CMOS (Cont'd)

Inverters (Cont'd)

Function	Device	Source	Line
Hex (Cont'd)			
HC	**GD74HC04**	**Goldstar (1066)**	
	GD74HC05	**Goldstar (1066)**	
	HD74HC04	Hitachi	
	MC54HC04	† **Motorola (1124)**	
	MC54HC05	† Motorola	5
	MC74HC04	**Motorola (1124)**	
	MC74HC05	Motorola	
	MM54HC04	† National	
	MM74HC04	National	
	CD54HC04	† **RCA (1149)**	10
	CD54HCU04	† RCA	
	CD74HC04	**RCA (1149)**	
	CD74HCU04	RCA	
	SP74HC04	SPI	
	M74HC04	SGS	15
	LR74HC04	Sharp	
	74HC04	**Signetics (1156)**	
	SS54HC04	† SSS	
	SS74HC04	SSS	
	SN54HC04	† **TI (714)**	20
	SN54HC05	† **TI (714)**	
	SN74HC04	TI	
	SN74HC05	TI	
	TC74HC04	**Toshiba (1363)**	
	US74HC04	Universal	25
HCT	54HCT04	† Fairchild	
	74HCT04	Fairchild	
	GD74HCT04	**Goldstar (1066)**	
	M74HC04	Mitsubishi	
	M74HC05	Mitsubishi	30
	MC54HCT04	† Motorola	
	MC54HCT05	† Motorola	
	MC54HCT34	† Motorola	
	MC74HCT04	Motorola	
	MC74HCT05	Motorola	35
	MC74HCT34	Motorola	
	MM54HCT04	† National	
	MM54HCT05	† National	
	MM54HCT34	† National	
	MM74HCT04	National	40
	MM74HCT05	National	
	MM74HCT34	National	
	CD54HCT04	† **RCA (1149)**	
	CD74HCT04	**RCA (1149)**	
	KS74HCTLS04	**Samsung (1153)**	45
	KS74HCTLS05	**Samsung (1153)**	
	M74HCT04	SGS	
	74HCT04	**Signetics (1156)**	
	SS54HCT04	† SSS	
	SS74HCT04	SSS	50
	TC74HCT04	**Toshiba (1363)**	
	US74HCT04	Universal	
	US74HCT05	Universal	
	ZX54HCT/LS04	† Zytrex	
	ZX74HCT/LS04	Zytrex	55
4XXX	F4069UBC	Fairchild	
	F4069UBM	† Fairchild	
	MC14069UBA	† **Motorola (1124)**	
	MC14069UBC	**Motorola (1124)**	
	CD4069C	National	60
	CD4069M	† National	
	MN4069UB	† Panasonic	
	CD4069UB	† **RCA (704,1145)**	
	CD4069UBE	**RCA (704,1145)**	
	LC4069UB	Sanyo	65
	HCC4069UB	† SGS	
	HCF4069UB	SGS	
	HEF4069UB	† Signetics	
	CM4069A	† Solitron	
	CM4069AE	Solitron	70

(Continued)

Function	Device	Source	Line
Hex			
4XXX (Cont'd)	883C4069UB	† SSS	
	883C4449UB	† SSS	
	BCL4069UB	SSS	
	BCL4449UB	SSS	
	SCL4069UB	SSS	75
	SCL4449UB	SSS	
	TC4069UB	**Toshiba (1363)**	
40HXXX	LR40H004	Sharp	
	TC40H004	**Toshiba (1363)**	
Hex Schmitt Trigger			
HC	54HC14	† Fairchild	80
	74HC14	Fairchild	
	TC74HC14	**Toshiba (1363)**	
Hex Unbuffered			
HC	MC54HCU04	† Motorola	
	MC74HCU04	Motorola	
	MM54HCU04	† National	85
	MM74HCU04	National	
	M74HCU04	SGS	
	74HCU04	Signetics	
	SN54HCU04	**TI (714)**	
	SN74HCU04	TI	90
	TC74HCU04	**Toshiba (1363)**	
Hex Three-State	MM70C96	† National	
	MM70C98	† National	
	MM80C96	National	
	MM80C98	National	95
4XXX	F40098BC	Fairchild	
	F40098BM	† Fairchild	
	HEF40098B	Signetics	
Octal Inverter/Line Driver, Three-State			
ACT	**V54ACT466**	† **VTC (1367,1370)**	
	V54ACT466	**VTC (1367,1370)**	100
	V54ACT466	† **VTC (1367,1370)**	
	V54ACT466	**VTC (1367,1370)**	
	V54ACT468	† **VTC (1367,1370)**	
	V54ACT468	**VTC (1367,1370)**	
	V74ACT466	**VTC (1367,1370)**	105
	V74ACT466	**VTC (1367,1370)**	
	V74ACT468	**VTC (1367,1370)**	
Octal Inverter/Line Driver,Three-State			
ACT	**V54ACT468**	† **VTC (1367,1370)**	
	V54ACT468	**VTC (1367,1370)**	
	V74ACT468	**VTC (1367,1370)**	110

Counters, Binary

Function	Device	Source	Line
Clock Generator with 4-Bit			
5XXX	TC5018	Toshiba	
Divide by 2, 8 or 16			
C	MM54C93	† National	
	MM74C93	National	
Divider with 4-Bit			
5XXX	TC5027B	Toshiba	
Presettable			
HC	SP74HC177	SPI	115
Presettable Fully Synchronous, Synchronous Clear			
AC	**54AC163**	† **Fairchild (1011,1014)**	
	74AC163	**Fairchild (1011,1014)**	
AHCT	**KS74AHCT163**	**Samsung (1153)**	
C	MM54C163	† National	
	MM74C163	National	120
HC	54HC163	† Fairchild	
	74HC163	Fairchild	
	GD74HC163	**Goldstar (1066)**	
	HD74HC163	Hitachi	
	M74HC163	Mitsubishi	125

(Continued)

Function	Device	Source	Line
Presettable Fully Synchronous, Synchronous Clear			
HC (Cont'd)	**MC54HC163**	† **Motorola (1127)**	
	MC74HC163	**Motorola (1127)**	
	MM54HC163	† National	
	MM74HC163	National	
	MN74HC163	Panasonic	130
	CD54HC163	† **RCA (1150)**	
	CD74HC163	**RCA (1150)**	
	SP74HC163	SPI	
	M74HC163	SGS	
	LR74HC163	Sharp	135
	74HC163	**Signetics (1157)**	
	SS54HC163	† SSS	
	SS74HC163	SSS	
	SN54HC163	**TI (714)**	
	SN74HC163	TI	140
	TC74HC163	**Toshiba (1363)**	
	US74HC163	Universal	
HCT	**GD74HCT163**	**Goldstar (1066)**	
	74HCTR163	MicroTech	
	MM54HCT163	† National	145
	MM74HCT163	National	
	CD54HCT163	† **RCA (1150)**	
	CD74HCT163	**RCA (1150)**	
	KS74HCTLS163	**Samsung (1153)**	
	74HCT163	**Signetics (1157)**	150
	SS54HCT163	† SSS	
	SS74HCT163	SSS	
	US74HCT163	Universal	
	ZX54HCT/LS163	† Zytrex	
	ZX74HCT/LS163	Zytrex	155
4XXX	F40163BC	Fairchild	
	F40163BM	† Fairchild	
	MC14163BA	† **Motorola (1127)**	
	MC14163BC	**Motorola (1127)**	
	CD40163BC	National	160
	CD40163BM	† National	
	CD40163B	† **RCA (1146)**	
	CD40163BE	**RCA (1146)**	
	HCC40163B	† SGS	
	HCF40163	SGS	165
	HEF40163B	Signetics	
	883C4163B	† SSS	
	BCL4163B	SSS	
	SCL4163B	SSS	
	TC40163B	**Toshiba (1363)**	170
40HXXX	**TC40H163**	**Toshiba (1363)**	
Presettable Synchronous, Asynchronous Clear			
AC	**54AC161**	† **Fairchild (1011,1014)**	
	74AC161	**Fairchild (1011,1014)**	
AHCT	**KS74AHCT161**	**Samsung (1153)**	
C	MM54C161	† National	175
	MM74C161	National	
HC	**GD74HC161A**	**Goldstar (1066)**	
	HD74HC161	Hitachi	
	M74HC161	Mitsubishi	
	MC54HC161	† **Motorola (1127)**	180
	MC74HC161	**Motorola (1127)**	
	MM54HC161	† National	
	MM74HC161	National	
	MN74HC161	Panasonic	
	CD54HC161	† **RCA (1150)**	185
	CD74HC161	**RCA (1150)**	
	SP74HC161	SPI	
	M74HC161	SGS	
	LR74HC161	Sharp	
	74HC161	**Signetics (1157)**	190
	74HC161	SSS	
	SS54HC161	† SSS	

(Continued)

† Military Temperature Range (−55° to 125°C)

* Typical Value

Bold face indicates additional data is provided on the page noted.

DIGITAL–CMOS (Cont'd)

Counters, Binary (Cont'd)

Function	Device	Source		Line
Presettable Synchronous, Asynchronous Clear				
HC			(Cont'd)	
	SS74HC161	SSS		
	SN54HC161	**† TI**	**(714)**	
	SN74HC161	TI		
	TC74HC161	**Toshiba**	**(1363)**	
	US74HC161	Universal		5
HCT	**GD74HCT161A**	**Goldstar**	**(1066)**	
	74HCTR161	MicroTech		
	MM54HCT161	† National		
	MM74HCT161	National		
	CD54HCT161	**† RCA**	**(1150)**	10
	CD74HCT161	**RCA**	**(1150)**	
	KS74HCTLS161	**Samsung**	**(1153)**	
	74HCT161	**Signetics**	**(1157)**	
	SS54HCT161	† SSS		
	SS74HCT161	SSS		15
	US74HCT161	Universal		
	ZX54HCT/LS161	† Zytrex		
	ZX74HCT/LS161	Zytrex		
4XXX	F40161BC	Fairchild		
	F40161BM	† Fairchild		20
	MC14161BA	**† Motorola**	**(1127)**	
	MC14161BC	**Motorola**	**(1127)**	
	CD40161BC	National		
	CD40161BM	† National		
	MN40161B	† Panasonic		25
	CD40161B	**† RCA**	**(1146)**	
	CD40161BE	**RCA**	**(1146)**	
	HCC40161B	† SGS		
	HCF40161B	SGS		
	HEF40161B	Signetics		30
	883C4161B	† SSS		
	BCL4161B	SSS		
	SCL4161B	SSS		
	TC40161B	**Toshiba**	**(1363)**	
40HXXX	**TC40H161**	**Toshiba**	**(1363)**	35
Presettable Up/Down				
AC	**54AC191**	**† Fairchild**	**(1011,1014)**	
	74AC191	**Fairchild**	**(1011,1014)**	
C	MM54C193	† National		
	MM74C193	National		
HC	54HC193	† Fairchild		40
	54HC4516	† Fairchild		
	54HC569	† Fairchild		
	74HC193	Fairchild		
	74HC4516	Fairchild		
	74HC569	Fairchild		45
	GD74HC193	**Goldstar**	**(1066)**	
	HD74HC191	Hitachi		
	HD74HC193	Hitachi		
	MC54HC168	† Motorola		
	MC54HC191	† Motorola		50
	MC54HC193	**† Motorola**	**(1127)**	
	MC74HC168	Motorola		
	MC74HC191	Motorola		
	MC74HC193	**Motorola**	**(1127)**	
	MM54HC191	† National		55
	MM54HC193	† National		
	MM74HC191	National		
	MM74HC193	National		
	MN74HC193	Panasonic		
	CD54HC191	**† RCA**	**(1150)**	60
	CD54HC193	**† RCA**	**(1150)**	
	CD54HC4516	**† RCA**	**(1150)**	
	CD74HC191	**RCA**	**(1150)**	
	CD74HC193	**RCA**	**(1150)**	
	CD74HC4516	**RCA**	**(1150)**	65
			(Continued)	

Function	Device	Source		Line
Presettable Up/Down				
HC			(Cont'd)	
	SP74HC193	SPI		
	M74HC191	SGS		
	M74HC193	SGS		
	74HC191	**Signetics**	**(1157)**	
	74HC193	**Signetics**	**(1157)**	70
	74HC4516	**Signetics**	**(1161)**	
	TC74HC193	**Toshiba**	**(1363)**	
	US74HC191	Universal		
	US74HC193	Universal		
HCT	**GD74HCT193**	**Goldstar**	**(1066)**	75
	MM54HCT191	† National		
	MM54HCT193	† National		
	MM74HCT191	National		
	MM74HCT193	National		
	CD54HCT191	**† RCA**	**(1150)**	80
	CD54HCT193	**† RCA**	**(1150)**	
	CD54HCT4516	**† RCA**	**(1150)**	
	CD74HCT191	**RCA**	**(1150)**	
	CD74HCT193	**RCA**	**(1150)**	
	CD74HCT4516	**RCA**	**(1150)**	85
	74HCT191	**Signetics**	**(1157)**	
	74HCT193	**Signetics**	**(1157)**	
	74HCT4516	**Signetics**	**(1161)**	
4XXX	F40193BC	Fairchild		
	F40193BM	† Fairchild		90
	F4516BC	Fairchild		
	F4516BM	† Fairchild		
	MC14516BA	**† Motorola**	**(1127)**	
	MC14516BC	**Motorola**	**(1127)**	
	CD40193BC	National		95
	CD40193BM	† National		
	CD4516BC	National		
	CD4516BM	† National		
	MN4516B	† Panasonic		
	CD40193B	**† RCA**	**(1146)**	100
	CD40193BE	**RCA**	**(1146)**	
	CD4516B	**† RCA**	**(1146)**	
	CD4516BE	**RCA**	**(1146)**	
	HCC4516B	† SGS		
	HCF4516B	SGS		105
	HEF40193B	Signetics		
	HEF4516B	Signetics		
	883C4193B	† SSS		
	883C4516B	† SSS		
	BCL4193B	SSS		110
	BCL4516B	SSS		
	SCL4193B	SSS		
	SCL4516B	SSS		
	TC40193	**Toshiba**	**(1363)**	
	TC4516B	**Toshiba**	**(1363)**	115
40HXXX	LR40H193	Sharp		
	TC40H193	**Toshiba**	**(1363)**	
Presettable 8-Bit Down				
HC	TC74HC4103	Toshiba		
4XXX	**CD40103B**	**† RCA**	**(1146)**	
	CD40103BE	**RCA**	**(1146)**	120
	HCC40103B	† SGS		
	HCF40103B	SGS		
	TC40103B	**Toshiba**	**(1363)**	
Programmable Divide-by-N, 4-Bit				
4XXX	F4526BC	Fairchild		
	F4526BM	† Fairchild		125
	MC14526BA	**† Motorola**	**(1128)**	
	MC14526BC	**Motorola**	**(1128)**	
	CD4526BC	National		
	CD4526BM	† National		
	HEF4526B	Signetics		130
	883C4526B	† SSS		
	BCL4526B	SSS		
			(Continued)	

Function	Device	Source		Line
Programmable Divide-by-N, 4-Bit				
4XXX			(Cont'd)	
	SCL4526B	SSS		
	TC4526B	**Toshiba**	**(1363)**	
Up/Down, Synchronous, 4-Bit				
HC	HD74HC669	Hitachi		135
Dual				
HC	**CD54HC4520**	**† RCA**	**(1150)**	
	CD74HC4520	**RCA**	**(1150)**	
	TC74HC4520	**Toshiba**	**(1363)**	
HCT	**CD54HCT4520**	**† RCA**	**(1150)**	
	CD74HCT4520	**RCA**	**(1150)**	140
Dual Synchronous				
AHCT	**KS74AHCT393**	**Samsung**	**(1153)**	
HC	HD74HC4520	Hitachi		
	M74HC393	Mitsubishi		
	MC54HC393	**† Motorola**	**(1127)**	
	MC74HC393	**Motorola**	**(1127)**	145
	M74HC393	SGS		
	LR74HC393	Sharp		
	74HC4520	**Signetics**	**(1161)**	
	SN54HC393	**† TI**	**(714)**	
	SN74HC393	TI		150
HCT	**74HCT4520**	**Signetics**	**(1161)**	
	54HCT393	† Supertex		
	74HCT393	Supertex		
SC	74SC393	Supertex		
4XXX	F4520BC	Fairchild		155
	F4520BM	† Fairchild		
	MC14520BA	**† Motorola**	**(1127)**	
	MC14520BC	**Motorola**	**(1127)**	
	CD4520BC	National		
	CD4520BM	† National		160
	MN4520B	† Panasonic		
	CD4520B	**† RCA**	**(1146)**	
	CD4520BE	**RCA**	**(1146)**	
	HCC4520B	† SGS		
	HCF4520B	SGS		165
	HEF4520B	Signetics		
	CM4520B	† Solitron		
	CM4520BE	Solitron		
	883C4520B	† SSS		
	BCL4520B	SSS		170
	SCL4520B	SSS		
	TC4520B	**Toshiba**	**(1363)**	
Dual 4-Bit				
HC	54HC393	† Fairchild		
	74HC393	Fairchild		
	GD74HC393	**Goldstar**	**(1066)**	175
	HD74HC393	Hitachi		
	MM54HC393	† National		
	MM74HC393	National		
	MN74HC393	Panasonic		
	CD54HC393	**† RCA**	**(1150)**	180
	CD74HC393	**RCA**	**(1150)**	
	SP74HC393	SPI		
	M74HC4520	SGS		
	74HC393	**Signetics**	**(1158)**	
	TC74HC393	**Toshiba**	**(1363)**	185
	US74HC393	Universal		
HCT	GD74HCT393	Goldstar		
	CD54HCT393	**† RCA**	**(1150)**	
	CD74HCT393	**RCA**	**(1150)**	
	KS74HCTLS393	**Samsung**	**(1153)**	190
	74HCT393	**Signetics**	**(1158)**	
	ZX74HCT/LS393	Zytrex		
40HXXX	**TC40H393**	**Toshiba**	**(1363)**	
4-Bit, Divide by 2 and by 5				
HC	SP74HC93	SPI		

† Military Temperature Range (–55° to 125°C)

* Typical Value

Bold face indicates additional data is provided on the page noted.

DIGITAL–CMOS (Cont'd)

Function	Device	Source	Line
Counters, Binary (Cont'd)			
4-Bit, Ripple			
HC	**GD74HC93**	**Goldstar** (1066)	
	HD74HC93	Hitachi	
	CD54HC93	† **RCA** (1150)	
	CD74HC93	**RCA** (1150)	
	74HC93	**Signetics** (1156)	5
HCT	**GD74HCT93**	**Goldstar** (1066)	
	CD54HCT93	† **RCA** (1150)	
	CD74HCT93	**RCA** (1150)	
	74HCT93	**Signetics** (1156)	
4-Bit Synchronous with Output Registers, Asynchronous Clear			
HC	SN74HC691	TI	10
	TC74HC691	**Toshiba** (1363)	
4-Bit Synchronous with Output Registers, Synchronous Clear			
HC	SN74HC693	TI	
	TC74HC693	**Toshiba** (1363)	
4-Bit Synchronous Binary Up/Down with Output Registers			
HC	SN74HC697	TI	
	SN74HC699	TI	15
	TC74HC697	**Toshiba** (1363)	
	TC74HC699	**Toshiba** (1363)	
4-Bit Up/Down, Asynchronous Load			
AHCT	**KS74AHCT191**	**Samsung** (153)	
HC	M74HC193	Mitsubishi	
	SN54HC191	† **TI** (714)	20
	SN54HC193	† **TI** (714)	
	SN74HC191	TI	
	SN74HC193	TI	
	TC74HC191	**Toshiba** (1363)	
HCT	**KS74HCTLS191**	**Samsung** (1153)	25
	US74HCT191	Universal	
4-Bit Up/Down Synchronous			
HC	MC54HC169	† Motorola	
	MC74HC169	Motorola	
	MM54HC169	† National	
	MM74HC169	National	30
HCT	MM54HCT169	† National	
	MM74HCT169	National	
5, 6, 7, 8, 9-Stage			
5XXX	TC5048	Toshiba	
7-Stage			
HC	HD74HC4024	Hitachi	
	M74HC4024	Mitsubishi	35
	MC54HC4024	† Motorola	
	MC74HC4024	Motorola	
	MM54HC4024	† National	
	MM74HC4024	National	
	CD54HC4024	† **RCA** (1150)	40
	CD74HC4024	**RCA** (1150)	
	M74HC4024	SGS	
	74HC4024	**Signetics** (1160)	
	SN54HC4024	† **TI** (714)	
	SN74HC4024	TI	45
	TC74HC4024	**Toshiba** (1363)	
	US74HC4024	Universal	
HCT	**CD54HCT4024**	† **RCA** (1150)	
	CD74HCT4024	**RCA** (1150)	
	74HCT4024	**Signetics** (1160)	50
	US74HCT4024	Universal	
4XXX	F4024BC	Fairchild	
	F4024BM	† Fairchild	
	MC14024BA	† **Motorola** (1128)	
	MC14024BC	**Motorola** (1128)	55
	CD4024BC	National	
	CD4024BM	† National	
	MN4024B	† Panasonic	
	CD4024A	† **RCA** (704,1146)	
		(Continued)	
7-Stage			
4XXX		(Cont'd)	
	CD4024AE	**RCA** (704,1146)	60
	CD4024B	† **RCA** (704,1146)	
	CD4024BE	**RCA** (704,1146)	
	HCC4024B	† SGS	
	HCF4024B	SGS	
	HEF4024B	Signetics	65
	CM4024A	† Solitron	
	CM4024AE	Solitron	
	883C4024B	† SSS	
	BCL4024B	SSS	
	SCL4024B	SSS	70
	TC4024B	**Toshiba** (1363)	
8-Bit, Down			
HC	**CD54HC40103**	† **RCA** (1150)	
	CD74HC40103	**RCA** (1150)	
	74HC40103	**Signetics** (1161)	
HCT	**CD54HCT40103**	† **RCA** (1150)	75
	CD74HCT40103	**RCA** (1150)	
	74HCT40103	**Signetics** (1160)	
8-Bit with Input Registers			
	US74HC592	Universal	
	US74HC593	Universal	
	US74HCT592	Universal	80
	US74HCT593	Universal	
AHCT	**KS74AHCT592**	**Samsung** (1153)	
	KS74AHCT593	**Samsung** (1153)	
HC	HD74HC592	Hitachi	
	HD74HC593	Hitachi	85
	MM54HC592	† National	
	MM54HC593	† National	
	MM74HC592	National	
	MM74HC593	National	
	SN54HC592	† **TI** (714)	90
	SN54HC593	† **TI** (714)	
	SN74HC592	TI	
	SN74HC593	TI	
	TC74HC592	**Toshiba** (1363)	
	TC74HC593	**Toshiba** (1363)	95
HCT	74HCT592	MicroTech	
	74HCT593	MicroTech	
8-Bit with Input Registers			
HC	MC54HC592	† Motorola	
	MC54HC593	† Motorola	
	MC74HC592	Motorola	100
	MC74HC593	Motorola	
8-Bit with Output Registers			
	US74HC590	Universal	
	US74HCT590	Universal	
AHCT	**KS74AHCT590**	**Samsung** (1153)	
HC	HD74HC590	Hitachi	105
	MC54HC590	† Motorola	
	MC74HC590	Motorola	
	MM54HC590	† National	
	MM74HC590	National	
	SN54HC590	† **TI** (714)	110
	SN74HC590	TI	
	TC74HC590	**Toshiba** (1363)	
HCT	MM54HCT590	† National	
	MM74HCT590	National	
8-Stage Synchronous			
4XXX	883C4404B	† SSS	115
	BCL4404B	SSS	
	SCL4404B	SSS	
12-Stage	US74HC4040	Universal	
	US74HCT4040	Universal	
HC	54HC4040	† Fairchild	120
	74HC4040	Fairchild	
	HD74HC4040	Hitachi	
		(Continued)	
12-Stage			
HC		(Cont'd)	
	M74HC4040	Mitsubishi	
	MC54HC4040	† **Motorola** (1128)	
	MC74HC4040	**Motorola** (1128)	125
	MM54HC4040	† National	
	MM74HC4040	National	
	MN74HC4040	Panasonic	
	CD54HC4040	† **RCA** (1150)	
	CD74HC4040	**RCA** (1150)	130
	SP74HC4040	SPI	
	M74HC4040	SGS	
	74HC4040	**Signetics** (1160)	
	SN54HC4040	† **TI** (714)	
	SN74HC4040	TI	135
	TC74HC4040	**Toshiba** (1363)	
HCT	**CD54HCT4040**	† **RCA** (1150)	
	CD74HCT4040	**RCA** (1150)	
	74HCT4040	**Signetics** (1160)	
4XXX	F4040BC	Fairchild	140
	F4040BM	† Fairchild	
	MC14040BA	† **Motorola** (1128)	
	MC14040BC	**Motorola** (1128)	
	CD4040BC	National	
	CD4040BM	† National	145
	MN4040B	† Panasonic	
	CD4040A	† **RCA** (1146)	
	CD4040AE	**RCA** (1146)	
	CD4040B	† **RCA** (1146)	
	CD4040BE	**RCA** (1146)	150
	HCC4040B	† SGS	
	HCF4040B	SGS	
	HEF4040B	Signetics	
	CM4040A	† Solitron	
	CM4040AE	Solitron	155
	883C4040B	† SSS	
	BCL4040B	SSS	
	SCL4040B	SSS	
	TC4040B	**Toshiba** (1363)	
14, 15, 16-Stage (with reset)			
5XXX	TC5036	Toshiba	160
14-Stage	US74HC4020	Universal	
	US74HCT4020	Universal	
HC	54HC4020	† Fairchild	
	74HC4020	Fairchild	
	HD74HC4020	Hitachi	165
	M74HC4020	Mitsubishi	
	MC54HC4020	† **Motorola** (1128)	
	MC74HC4020	**Motorola** (1128)	
	MM54HC4020	† National	
	MM74HC4020	National	170
	CD54HC4020	† **RCA** (1150)	
	CD74HC4020	**RCA** (1150)	
	SP74HC4020	SPI	
	M74HC4020	SGS	
	74HC4020	**Signetics** (1160)	175
	SN54HC4020	† **TI** (714)	
	SN74HC4020	TI	
	TC74HC4020	**Toshiba** (1363)	
HCT	**CD54HCT4020**	† **RCA** (1150)	
	CD74HCT4020	**RCA** (1150)	180
	74HCT4020	**Signetics** (1160)	
4XXX	F4020BC	Fairchild	
	F4020BM	† Fairchild	
	MC14020BA	† **Motorola** (1128)	
	MC14020BC	**Motorola** (1128)	185
	CD4020BC	National	
	CD4020BM	† National	
	CD4020A	† **RCA** (704,1146)	
	CD4020AE	**RCA** (704,1146)	
	CD4020B	† **RCA** (704,1146)	190
	CD4020BE	**RCA** (704,1146)	
		(Continued)	

† Military Temperature Range (−55° to 125°C)

* Typical Value

Bold face indicates additional data is provided on the page noted.

DIGITAL-CMOS (Cont'd)

Function	Device	Source	Line
Counters, Binary (Cont'd)			
14-Stage			
4XXX (Cont'd)			
	HCC4020B	† SGS	
	HCF4020B	SGS	
	HEF4020B	Signetics	
	CM4020A	† Solitron	
	CM4020AE	Solitron	5
	883C4020B	† SSS	
	BCL4020B	SSS	
	SCL4020B	SSS	
	TC4020B	**Toshiba** (1363)	
14-Stage with Oscillator			
	US74HC4060	Universal	10
	US74HCT4060	Universal	
HC	HD74HC4060	Hitachi	
	MC54HC4060	† **Motorola** (1128)	
	MC74HC4060	**Motorola** (1128)	
	MM54HC4060	† National	15
	MM74HC4060	National	
	CD54HC4060	† **RCA** (1150)	
	CD74HC4060	**RCA** (1150)	
	M74HC4060	SGS	
	74HC4060	† **Signetics** (1160)	20
	SN54HC4060	† **TI** (714)	
	SN74HC4060	TI	
	TC74HC4060	**Toshiba** (1363)	
HCT	**CD54HCT4060**	**RCA** (1150)	
	CD74HCT4060	**RCA** (1150)	25
	74HCT4060	† **Signetics** (1160)	
4XXX	**MC14060B**	**Motorola** (1128)	
	CD4060BC	National	
	CD4060BM	† National	
	CD4060A	† **RCA** (1146)	30
	CD4060AE	**RCA** (1146)	
	CD4060B	† **RCA** (1146)	
	CD4060BE	**RCA** (1146)	
	HCC4060B	† SGS	
	HCF4060B	SGS	35
	HEF4060B	Signetics	
	883C4060B	† SSS	
	BCL4060B	SSS	
	SCL4060B	SSS	
Counters, Binary Count Up/Down			
Synchronous, 8-Bit, Three-State			
TTL-LS	DM54LS469	† National	40
	DM74LS469	National	
Counters, Decade			
Counter/Divider, 7 Segment Display Output and Display Enable			
4XXX	**CD4026A**	† **RCA** (1146)	
	CD4026AE	**RCA** (1146)	
	CD4026B	† **RCA** (1146)	
	CD4026BE	**RCA** (1146)	45
	HCC4026B	† SGS	
	HCF4026B	SGS	
	CM4026A	† Solitron	
	CM4026AE	Solitron	
	883C4026AB	† SSS	50
	883C4426AB	† SSS	
	BCL4026AB	SSS	
	BCL4426AB	SSS	
	SCL4026AB	SSS	
	SCL4426AB	SSS	55
Counter/Divider, 7 Segment Display Output and Ripple Blanking			
4XXX	**CD4033A**	† **RCA** (1146)	
	CD4033AE	**RCA** (1146)	
	CD4033B	† **RCA** (1146)	
	CD4033BE	**RCA** (1146)	
	HCC4033B	† SGS	60
	HCF4033B	SGS	
	CM4033A	† Solitron	
	CM4033AE	Solitron	
	883C4033AB	† SSS	
	883C4433AB	† SSS	65
	BCL4033AB	SSS	
	SCL4033AB	SSS	
	SCL4433AB	SSS	
Counter/Divider, 10 Line Output			
HC	54HC4017	† Fairchild	
	74HC4017	Fairchild	70
	HD74HC4017	Hitachi	
	M74HC4017	Mitsubishi	
	MC54HC4017	† **Motorola** (1128)	
	MC74HC4017	**Motorola** (1128)	
	MM54HC4017	† National	75
	MM74HC4017	National	
	CD54HC4017	† **RCA** (1150)	
	CD74HC4017	**RCA** (1150)	
	SP74HC4017	SPI	
	M74HC4017	SGS	80
	74HC4017	**Signetics** (1160)	
	SN74HC4017	TI	
	TC74HC4017	**Toshiba** (1363)	
	US74HC4017	Universal	
HCT	**CD54HCT4017**	† **RCA** (1150)	85
	CD74HCT4017	**RCA** (1150)	
	74HCT4017	**Signetics** (1160)	
	US74HCT4017	Universal	
4XXX	F4017BC	Fairchild	
	F4017BM	† Fairchild	90
	MC14017BA	† **Motorola** (1128)	
	MC14017BC	**Motorola** (1128)	
	CD4017BC	National	
	CD4017BM	† National	
	MN4017B	† Panasonic	95
	CD4017A	† **RCA** (704,1146)	
	CD4017AE	**RCA** (704,1146)	
	CD4017B	† **RCA** (704,1146)	
	CD4017BE	**RCA** (704,1146)	
	HCC4017B	† SGS	100
	HCF4017B	SGS	
	HEF4017B	Signetics	
	CM4017A	† Solitron	
	CM4017AE	Solitron	
	883C4017B	† SSS	105
	BCL4017B	SSS	
	SCL4017B	SSS	
	TC4017B	**Toshiba** (1363)	
Counter/Latch/Display Driver			
	ICM7208	**Intersil** (1089)	
Divide by 2 and by 5			
HC	SP74HC90	SPI	110
HCT	74HCT290	MicroTech	
	74HCTR90	MicroTech	
Presettable			
HC	SP74HC176	SPI	
Presettable Fully Synchronous, Synchronous Clear			
AHCT	**KS74AHCT162**	**Samsung** (1153)	
C	MM54C162	† National	115
	MM74C162	National	
HC	54HC162	† Fairchild	
	74HC162	Fairchild	
	HD74HC162	Hitachi	
		(Continued)	
Presettable Fully Synchronous, Synchronous Clear			
HC (Cont'd)			
	M74HC162	Mitsubishi	120
	MC54HC162	† **Motorola** (1127)	
	MC74HC162	**Motorola** (1127)	
	MM54HC162	† National	
	MM74HC162	National	
	CD54HC162	† **RCA** (1150)	125
	CD74HC162	**RCA** (1150)	
	SP74HC162	SPI	
	M74HC162	SGS	
	LR74HC162	Sharp	
	74HC162	**Signetics** (1157)	130
	SN54HC162	† **TI** (714)	
	SN74HC162	TI	
	TC74HC162	**Toshiba** (1363)	
	US74HC162	Universal	
HCT	MM54HCT162	† National	135
	MM74HCT162	National	
	CD54HCT162	† **RCA** (1150)	
	CD74HCT162	**RCA** (1150)	
	KS74HCTLS162	**Samsung** (1153)	
	74HCT162	**Signetics** (1157)	140
	ZX54HCT/LS162	† Zytrex	
	ZX74HCT/LS162	Zytrex	
4XXX	F40162BC	Fairchild	
	F40162BM	† Fairchild	
	MC14162BA	† **Motorola** (1127)	145
	MC14162BC	**Motorola** (1127)	
	CD40162BC	National	
	CD40162BM	† National	
	CD40162B	† **RCA** (1146)	
	CD40162BE	**RCA** (1146)	150
	HCC40162B	† SGS	
	HCF40162B	SGS	
	HEF40162B	Signetics	
	883C4162B	† SSS	
	BCL4162B	SSS	155
	SCL4162B	SSS	
	TC40162B	**Toshiba** (1363)	
40HXXX	**TC40H162**	**Toshiba** (1363)	
Presettable (sets to 0 or 9, divides by 2, 5 or 10)			
C	MM54C90	† National	
Presettable (sets to 0 or 9, divides by 2, 5 or 10)			
C	MM74C90	National	160
Presettable Synchronous, Asynchronous Clear			
AC	**54AC160**	† **Fairchild** (1011,1014)	
	74AC160	**Fairchild** (1011,1014)	
AHCT	**KS74AHCT160**	**Samsung** (1153)	
C	MM54C160	† National	
	MM74C160	National	165
HC	54HC160	† Fairchild	
	74HC160	Fairchild	
	HD74HC160	Hitachi	
	M74HC160	Mitsubishi	
	MC54HC160	† **Motorola** (1127)	170
	MC74HC160	**Motorola** (1127)	
	MM54HC160	† National	
	MM74HC160	National	
	MN74HC160	Panasonic	
	CD54HC160	† **RCA** (1150)	175
	CD74HC160	**RCA** (1150)	
	SP74HC160	SPI	
	M74HC160	SGS	
	LR74HC160	Sharp	
	SN54HC160	† **TI** (714)	180
	SN74HC160	TI	
	TC74HC160	**Toshiba** (1363)	
	US74HC160	Universal	
		(Continued)	

† Military Temperature Range (−55° to 125°C)

* Typical Value

Bold face indicates additional data is provided on the page noted.

DIGITAL–CMOS (Cont'd)

Counters, Decade (Cont'd)

Function	Device	Source	Line
Presettable Synchronous, Asynchronous Clear (Cont'd)			
HCT	MM54HCT160	† National	
	MM74HCT160	National	
	CD54HCT160	**† RCA** (1150)	
	CD74HCT160	**RCA** (1150)	
	KS74HCTLS160	**Samsung** (1153)	5
	US74HCT160	Universal	
	ZX54HCT/LS160	† Zytrex	
	ZX74HCT/LS160	Zytrex	
4XXX	F40160BC	Fairchild	
	F40160BM	† Fairchild	10
	MC14160BA	**† Motorola** (1127)	
	MC14160BC	**Motorola** (1127)	
	CD40160BC	National	
	CD40160BM	† National	
	CD40160B	**† RCA** (1146)	15
	CD40160BE	**RCA** (1146)	
	HCC40160B	† SGS	
	HCF40160B	SGS	
	HEF40160B	Signetics	
	883C4160B	† SSS	20
	BCL4160B	SSS	
	SCL4160B	SSS	
	TC40160B	**Toshiba** (1363)	
40HXXX	**TC40H160**	**Toshiba** (1363)	
Presettable Up/Down			
	HCTR0200	Hughes	25
AHCT	**KS74AHCT193**	**Samsung** (1153)	
C	MM54C192	† National	
	MM74C192	National	
HC	54HC192	† Fairchild	
	74HC192	Fairchild	30
	HD74HC192	Hitachi	
	M74HC192	Mitsubishi	
	MC54HC192	**† Motorola** (1127)	
	MC74HC192	**Motorola** (1127)	
	MM54HC192	† National	35
	MM74HC192	National	
	MN74HC192	Panasonic	
	CD54HC192	**† RCA** (1150)	
	CD74HC192	**RCA** (1150)	
	SP74HC192	SPI	40
	M74HC192	SGS	
	74HC192	**Signetics** (1157)	
	SS54HC192	† SSS	
	SS74HC192	SSS	
	SN54HC192	**† TI** (714)	45
	SN74HC192	TI	
	TC74HC192	**Toshiba** (1363)	
	US74HC192	Universal	
HCT	**CD54HCT192**	**† RCA** (1150)	
	CD74HCT192	**RCA** (1150)	50
	74HCT192	**Signetics** (1157)	
	SS54HCT192	† SSS	
	SS74HCT192	SSS	
4XXX	F40192BC	Fairchild	
	F40192BM	† Fairchild	55
	F4510BC	Fairchild	
	F4510BM	† Fairchild	
	MC14510BA	**† Motorola** (1127)	
	MC14510BC	**Motorola** (1127)	
	CD40192BC	National	60
	CD40192BM	† National	
	CD4510BC	National	
	CD4510BM	† National	
	CD40192B	**† RCA** (1146)	
	CD40192BE	**RCA** (1146)	65
	CD4510B	**† RCA** (1146)	
	CD4510BE	**RCA** (1146)	
		(Continued)	
Presettable Up/Down			
4XXX (Cont'd)			
	HCC40192B	† SGS	
	HCC4510B	† SGS	
	HCF40192B	SGS	70
	HCF4510B	SGS	
	HEF40192B	Signetics	
	HEF4510B	Signetics	
	883C4192B	† SSS	
	883C4510B	† SSS	75
	BCL4192B	SSS	
	BCL4510B	SSS	
	SCL4192B	SSS	
	SCL4510B	SSS	
	TC40192B	**Toshiba** (1363)	80
	TC4510B	**Toshiba** (1363)	
40HXXX	LR40H192	Sharp	
	TC40H192	**Toshiba** (1363)	
Presettable Up/Down with mode control			
HC	**74HC190**	**Signetics** (1157)	
HCT	**74HCT190**	**Signetics** (1157)	85
Presettable 2-Decade Down, BCD			
HC	**CD54HC40102**	**† RCA** (1150)	
	CD74HC40102	**RCA** (1150)	
	74HC40102	**Signetics** (1160)	
HCT	**CD54HCT40102**	**† RCA** (1150)	
	CD74HCT40102	**RCA** (1150)	90
	74HCT40102	**Signetics** (1161)	
4XXX	**CD40102B**	**† RCA** (1146)	
	CD40102BE	**RCA** (1146)	
	HCC40102B	† SGS	
	HCF40102B	SGS	95
	TC40102B	**† Toshiba** (1363)	
Programmable Divide-by-N, 4-Bit			
4XXX	F4522BC	Fairchild	
	F4522BM	† Fairchild	
	MC14522BA	**† Motorola** (1128)	
	MC14522BC	**Motorola** (1128)	100
	CD4522BC	National	
	CD4522BM	† National	
	HEF4522B	Signetics	
	883C4522B	† SSS	
	BCL4522B	SSS	105
	SCL4522B	SSS	
	TC4522B	**Toshiba** (1363,13663)	
Synchronous Up/Down with Output Registers			
HC	SN74HC696	TI	
	SN74HC698	TI	
	TC74HC696	**Toshiba** (1363)	110
	TC74HC698	**Toshiba** (1363)	
Synchronous with Output Registers, Asynchronous Clear			
HC	SN74HC690	TI	
	TC74HC690	**Toshiba** (1363)	
Synchronous with Output Registers, Synchronous Clear			
HC	SN74HC692	TI	
	TC74HC692	**Toshiba** (1363)	115
Up/Down Counter/Decoder/Latch/Driver (direct 7-segment driver)			
4XXX	**CD40110B**	**† RCA** (1146)	
	CD40110BE	**RCA** (1146)	
Up/Down, Programmable			
HC	54HC4510	† Fairchild	
	74HC4510	Fairchild	
	CD54HC4510	**† RCA** (1150)	120
	CD74HC4510	**RCA** (1150)	
	74HC4510	**Signetics** (1161)	
HCT	**CD54HCT4510**	**† RCA** (1150)	
	CD74HCT4510	**RCA** (1150)	
	HCT4510	Signetics	125
Up/Down, Synchronous			
HC	HD74HC190	Hitachi	
	HD74HC668	Hitachi	
	MC54HC190	† Motorola	
	MC74HC190	Motorola	
	MM54HC190	† National	130
	MM74HC190	National	
	CD54HC190	**† RCA** (1150)	
	CD74HC190	**RCA** (1150)	
	M74HC190	SGS	
	SN54HC190	**† TI** (714)	135
	SN74HC190	TI	
	TC74HC190	**Toshiba** (1363)	
	US74HC190	Universal	
HCT	**CD54HCT190**	**† RCA** (1150)	
	CD74HCT190	**RCA** (1150)	140
	US74HCT190	Universal	
Up/Down, Three-State			
HC	54HC568	† Fairchild	
	74HC568	Fairchild	
Dual	**TC40H390**	**Toshiba** (1363)	
HC	54HC390	† Fairchild	145
	74HC390	Fairchild	
	HD74HC390	Hitachi	
	HD74HC490	Hitachi	
	MM54HC390	† National	
	MM74HC390	National	150
	MN74HC390	Panasonic	
	CD54HC390	**† RCA** (1150)	
	CD74HC390	**RCA** (1150)	
	SP74HC390	SPI	
	74HC390	**Signetics** (1158)	155
	SN54HC490	**† TI** (714)	
	SN74HC490	TI	
	US74HC390	Universal	
HCT	**CD54HCT390**	**† RCA** (1150)	
	CD74HCT390	**RCA** (1150)	160
	74HCT390	**Signetics** (1158)	
	ZX74HCT/LS390	Zytrex	
40HXXX	TC40HC390	Toshiba	
HC	M74HC390	Mitsubishi	
	MC54HC390	**† Motorola** (1127)	165
	LR74HC390	Sharp	
	SN54HC390	**† TI** (714)	
	SN74HC390	TI	
Dual Synchronous			
HC	HD74HC4518	Hitachi	
	MC54HC4518	† Motorola	170
	MC74HC390	**Motorola** (1127)	
	MC74HC4518	Motorola	
	CD54HC4518	**† RCA** (1150)	
	CD74HC4518	**RCA** (1150)	
	M74HC390	SGS	175
	M74HC4518	SGS	
	74HC4518	**Signetics** (1161)	
	TC74HC4518	**Toshiba** (1363)	
HCT	**CD54HCT4518**	**† RCA** (1150)	
	CD74HCT4518	**RCA** (1150)	180
	74HCT4518	**Signetics** (1161)	
	US74HCT390	Universal	
4XXX	F4518BC	Fairchild	
	F4518BM	† Fairchild	
	MC14518BA	**† Motorola** (1127)	185
	MC14518BC	**Motorola** (1127)	
	CD4518BC	National	
	CD4518BM	† National	
	MN4518B	† Panasonic	
	CD4518B	**† RCA** (1146)	190
	CD4518BE	**RCA** (1146)	
	HCC4518B	† SGS	
	HCF4518B	SGS	
		(Continued)	

† Military Temperature Range (−55° to 125°C)

* Typical Value

Bold face indicates additional data is provided on the page noted.

DIGITAL-CMOS (Cont'd)

Counters, Decade (Cont'd)

Function	Device	Source	
Dual Synchronous			
4XXX			(Cont'd)
	HEF4518B	Signetics	
	CM4518B	† Solitron	
	CM4518BE	Solitron	
	883C4518B	† SSS	
	BCL4518B	SSS	
	SCL4518B	SSS	
	TC4518B	**Toshiba**	**(1363)**
Dual BCD Programmable Down Counter			
HC	TC74HC4102	Toshiba	
Dual			
HC	**TC74HC390**	**Toshiba**	**(1363)**
3- 1/2 Digit Counter to BCD Driver			
	HCTR6010	Hughes	
HCT	HCTR4010	Hughes	
4XXX	CM4102	† Solitron	
3-Decade, Decoder, Driver			
	LC7960	Sanyo	
3-Decade Multiplexed Output			
4XXX	F4553BC	Fairchild	
	F4553BM	† Fairchild	
	MC14553BA	**† Motorola**	**(1128)**
	MC14553BC	**Motorola**	**(1128)**
4- 1/2 Digit	**ICM7236**	**Intersil**	**(1089)**
4- 1/2 Digit Counter/Timer			
	ICM7236A	**Intersil**	**(1089)**
4- 1/2 Digit Up Counter			
	ICM7224	**Intersil**	**(1089)**
	ICM7224A	**Intersil**	**(1089)**
	ICM7225	**Intersil**	**(1089)**
	ICM7225A	**Intersil**	**(1089)**
4- 1/2 Digit Up-Down Counter/Latch/Decoder Driver, LCD			
C	MM74C946	National	
4- 1/2 -Digit, Programmable			
	TC9122	Toshiba	
4-Digit, Multiplexed Output, Left Digit Counts to 2-(Maximum count 1999.)			
C	MM74C928	National	
4-Digit, Multiplexed Output, Second Digit Counts to 6 (Maximum count 9599.)			
C	MM74C927	National	
4-Digit Up/Down, Counter/Latch/Decoder Driver, LCD			
C	MM74C945	Maxim	
	MM74C947	Maxim	
	MM74C945	National	
	MM74C947	National	
4-Digit Up/Down Counter/Latch/Display Driver			
	ICM7217	**Intersil**	**(1089)**
	ICM7217A	**Intersil**	**(1089)**
	ICM7227	**Intersil**	**(1089)**
	ICM7227A	**Intersil**	**(1089)**
	ICM7217	Maxim	
	ICM7217A	Maxim	
4-Digit Up/Down Counter/Latch/Display Driver; Cascadable, Synchronous, Presettable, BCD Output (versions have either common anode or cathode LED direct 7 segment and digit driver; 9999 or 5959 count; hard wire control: 7217; processor control: 7227; 5 V supply)	**ICM7217B**	**Intersil**	**(1089)**
	ICM7217C	**Intersil**	**(1089)**
	ICM7227B	**Intersil**	**(1089)**
	ICM7227C	**Intersil**	**(1089)**
	ICM7217B	Maxim	
	ICM7217C	Maxim	
4-Decade			
4XXX	HEF4737	Signetics	
5XXX	TC5001	Toshiba	
	TC5037	Toshiba	
	TC5051	Toshiba	
	TC5052	Toshiba	
	TC5053	Toshiba	
	TC5054	Toshiba	
4-Decade, Decoder, Driver			
	LC7961	Sanyo	
4-Decade Divider	**RDD104**	**LSIComp**	**(1099)**
4-Decade Divide-by-N			
HC	**CD54HC4059**	**† RCA**	**(1150)**
	CD74HC4059	**RCA**	**(1150)**
	74HC4059	**Signetics**	**(1160)**
HCT	**CD54HCT4059**	**† RCA**	**(1150)**
	CD74HCT4059	**RCA**	**(1150)**
	74HCT4059	**Signetics**	**(1160)**
4XXX	**CD4059A**	**† RCA**	**(1146)**
	CD4059AE	**RCA**	**(1146)**
	HEF4059B	Signetics	
4-Decade, Multiplexed Output (The 926 gives carry at 6000.)			
C	MM74C925	National	
	MM74C926	National	
4-Decade Up/Down, with Timer			
5XXX	TC5010	Toshiba	
4- 1/2 Digit Up Counter/Decoder/Driver			
	ICM7224	Maxim	
	ICM7225	Maxim	
5-Decade, Multiplexed Output			
4XXX	**MC14534BA**	**† Motorola**	**(1128)**
	MC14534BC	**Motorola**	**(1128)**
	HEF4534B	† Signetics	
6-Digit			
5XXX	TC5032	Toshiba	

Counters, Miscellaneous

Function	Device	Source	
Divide-by-8 Counter/Divider, Decoded Output			
HC	**TC74HC4022**	**† Toshiba**	**(1363)**
4XXX	F4022BC	Fairchild	
	F4022BM	† Fairchild	
	MC14022BA	**† Motorola**	**(1128)**
	MC14022BC	**Motorola**	**(1128)**
	CD4022BC	National	
	CD4022BM	† National	
	CD4022A	**† RCA**	**(704,1146)**
	CD4022AE	**RCA**	**(704,1146)**
	CD4022B	**† RCA**	**(704,1146)**
	CD4022BE	**RCA**	**(704,1146)**
	HCC4022B	† SGS	
	HCF4022B	SGS	
	HEF4022B	Signetics	
	CM4022A	† Solitron	
	CM4022AE	Solitron	
	883C4022B	† SSS	
	BCL4022B	SSS	
	SCL4022B	SSS	
	TC4022B	**Toshiba**	**(1363)**
Divide-by-60, BCD Output (industrial time base generator)			
4XXX	MC14566BA	† Motorola	
	MC14566BC	Motorola	
Frequency Counter			
	ICM7216	**Intersil**	**(1089)**
	ICM7226	**Intersil**	**(1089)**
Phase Comparator and Programmable			
4XXX	MC14568BA	† Motorola	
	MC14568BC	Motorola	
Presettable Divide-by-N			
4XXX	F4018BC	Fairchild	
	F4018BM	† Fairchild	
	MC14018BA	**† Motorola**	**(1128)**
	MC14018BC	**Motorola**	**(1128)**
	CD4018BC	National	
	CD4018BM	† National	
	CD4018A	**† RCA**	**(1146)**
	CD4018AE	**RCA**	**(1146)**
	CD4018B	**† RCA**	**(1146)**
	CD4018BE	**RCA**	**(1146)**
	HCC4018B	† SGS	
	HCF4018B	SGS	
	HEF4018B	Signetics	
	CM4018A	† Solitron	
	CM4018AE	Solitron	
	883C4018B	† SSS	
	BCL4018B	SSS	
	SCL4018B	SSS	
	TC4018B	**Toshiba**	**(1363)**
Presettable Up/Down Binary or Decade			
4XXX	F4029BC	Fairchild	
	F4029BM	† Fairchild	
	MC14029BA	**† Motorola**	**(1127)**
	MC14029BC	**Motorola**	**(1127)**
	CD4029BC	National	
	CD4029BM	† National	
	MN4029B	† Panasonic	
	CD4029A	**† RCA**	**(1146)**
	CD4029B	**† RCA**	**(1146)**
	CD4029BE	**RCA**	**(1146)**
	HCC4029B	† SGS	
	HCF4029B	SGS	
	HEF4029B	Signetics	
	CM4029A	† Solitron	
	CM4029AE	Solitron	
	883C4029B	† SSS	
	BCL4029B	SSS	
	SCL4029B	SSS	
	TC4029B	**Toshiba**	**(1363)**
See also CMOS Oscillators/Dividers and Digital-Special			
Binary/Decade with Two Reset Functions			
5XXX	TC5026B	Toshiba	
Dual Programmable Divide-by-N Binary/Decade			
4XXX	**MC14569BC**	**† Motorola**	**(1128)**
Octal Counter/Divider			
HC	HD74HC4022	Hitachi	
	M74HC4022	Mitsubishi	
	SN74HC4022	TI	
	SN74HC7022	TI	

Decoders

Function	Device	Source	
Decade Counter with 7-Segment Output and Bipolar Drivers			
4XXX	BCL4433AB	SSS	
LCD, 4-Digit, Microprocessor Interface			
	ICM7211AM	Maxim	
	ICM7211M	Maxim	
LCD, 4-Digit, Multiplexed BCD to LCD Decoder/Driver, AC Drive	ICM7211	Maxim	
	ICM7211A	Maxim	
LED, 4-Digit BCD or Binary to 7-Segment Decoder/Driver, Data and Digit Select Input Latches for μP Interface			
	ICM7212AM	Maxim	
	ICM7212M	Maxim	
N-Bit (for I/O interface)			
	HMMP1853	† Hughes	
	HMMP1853C	† Hughes	
	CDP1853	**RCA**	**(1673,1679)**
	CDP1853C	**RCA**	**(1673,1679)**

(Continued)

† Military Temperature Range (−55° to 125°C)

* Typical Value

Bold face indicates additional data is provided on the page noted.

DIGITAL-CMOS (Cont'd)

Decoders (Cont'd)

Function	Device	Source	Line
N-Bit (for I/O interface) (Cont'd)			
HC	HCMP1853	Hughes	
	HCMP1853C	Hughes	
BCD-to-Decimal			
C	MM54C42	† National	
	MM74C42	National	
HC	54HC42	† Fairchild	5
	74HC42	Fairchild	
	GD74HC145	**Goldstar (1066)**	
	GD74HC42	**Goldstar (1066)**	
	HD74HC42	Hitachi	
	M74HC42	Mitsubishi	10
	MC54HC42	† **Motorola (1130)**	
	MC74HC42	**Motorola (1130)**	
	MM54HC42	† National	
	MM74HC42	National	
	MN74HC42	Panasonic	15
	CD54HC42	† **RCA (1150)**	
	CD74HC42	**RCA (1150)**	
	SP74HC42	SPI	
	M74HC42	SGS	
	LR74HC42	Sharp	20
	74HC42	**Signetics (1156)**	
	SN54HC42	† **TI (714)**	
	SN74HC42	TI	
	TC74HC4028	**Toshiba (1363)**	
	TC74HC42	**Toshiba (1363)**	25
	US74HC42	Universal	
HCT	**GD74HCT42**	**Goldstar (1066)**	
	CD54HCT42	† **RCA (1150)**	
	CD74HCT42	**RCA (1150)**	
	74HCT42	**Signetics (1156)**	30
4XXX	F4028BC	Fairchild	
	F4028BM	† Fairchild	
	MC14028BA	† **Motorola (1130)**	
	MC14028BC	**Motorola (1130)**	
	CD4028BC	National	35
	CD4028BM	† National	
	MN4028B	† Panasonic	
	CD4028A	† **RCA (704,1145)**	
	CD4028AE	**RCA (704,1145)**	
	CD4028B	† **RCA (704,1145)**	40
	CD4028BE	**RCA (704,1145)**	
	HCC4028B	† SGS	
	HCF4028B	SGS	
	HEF4028B	Signetics	
	CM4028A	† Solitron	45
	CM4028AE	Solitron	
	883C4028B	† SSS	
	BCL4028B	SSS	
	SCL4028B	SSS	
	TC4028B	**Toshiba (1363)**	50
40HXXX	LR40H042	Sharp	
	TC40H042	**Toshiba (1363)**	
BCD-to-7 Segment Decoder/Driver			
4XXX	**MC14547BA**	† **Motorola (1130)**	
	MC14547BC	**Motorola (1130)**	
BCD-to-7-Segment			
C	MM54C48	† National	55
	MM74C48	National	
5XXX	TC5002B	Toshiba	
Dual Binary to 1 of 4 Decoder/Demultiplexer (high)			
4XXX	F4555BC	Fairchild	
	F4555BM	† Fairchild	
	MC14555BA	† **Motorola (1130)**	60
	MC14555BC	**Motorola (1130)**	
	CD4555B	† **RCA (704,1145,1147)**	
	CD4555BE	**RCA (704,1145,1147)**	
(Continued)			
Dual Binary to 1 of 4 Decoder/Demultiplexer (high)			
4XXX (Cont'd)			
	HCC4555B	† SGS	
	HCF4555B	SGS	65
	HEF4555B	Signetics	
	883C4555B	† SSS	
	BCL4555B	SSS	
	SCL4555B	SSS	
	TC4555B	**Toshiba (1363)**	70
Dual Binary to 1 of 4 Decoder/Demultiplexer (low)			
4XXX	F4556BC	Fairchild	
	F4556BM	† Fairchild	
	MC14556BA	† **Motorola (1130)**	
	MC14556BC	**Motorola (1130)**	
	MN4556B	† Panasonic	75
	CD4556B	† **RCA (704,1145,1147)**	
	CD4556BE	**RCA (704,1145,1147)**	
	HCC4556B	† SGS	
	HCF4556B	SGS	
	HEF4556B	Signetics	80
	883C4556B	† SSS	
	BCL4556B	SSS	
	SCL4556B	SSS	
	TC4556B	**Toshiba (1363)**	
Dual 2-Line to 4-Line Decoder			
HC	**GD74HC155**	**Goldstar (1066)**	85
	HD74HC155	Hitachi	
	MC54HC155	† Motorola	
	MC74HC155	Motorola	
	TC74HC155	**Toshiba (1363)**	
Dual 2-Line to 4-Line Decoder/Demultiplexer			
AC	**54AC139**	† **Fairchild (1011,1015)**	90
	74AC139	**Fairchild (1011,1015)**	
AHCT	IDT74AHCT139	IDT	
	KS74AHCT139	**Samsung (1153)**	
	KS74AHCT155	**Samsung (1153)**	
	KS74AHCT239	**Samsung (1153)**	95
FCT	74HC139	IDT	
	IDT54FCT139	† IDT	
	IDT74FCT139	IDT	
	IDT74HCT139	IDT	
HC	54HC139	† Fairchild	100
	74HC139	Fairchild	
	GD74HC139	**Goldstar (1066)**	
	HD74HC139	Hitachi	
	IDT54AHCT139	† IDT	
	M74HC139	Mitsubishi	105
	MC54HC139	† **Motorola (1130)**	
	MC54HC239	† Motorola	
	MC74HC139	**Motorola (1130)**	
	MC74HC239	Motorola	
	MM54HC139	† National	110
	MM74HC139	National	
	MN74HC139	Panasonic	
	CD54HC139	† **RCA (1150)**	
	CD74HC139	**RCA (1150)**	
	74HC139	Samsung	115
	SP74HC139	SPI	
	SP74HC239	SPI	
	M74HC139	SGS	
	LR74HC139	Sharp	
	74HC139	**Signetics (1157)**	120
	SS54HC139	† SSS	
	SS54HC239	† SSS	
	SS74HC139	SSS	
	SS74HC239	SSS	
	SN54HC139	† **TI (714)**	125
	SN74HC139	TI	
(Continued)			
Dual 2-Line to 4-Line Decoder/Demultiplexer			
HC (Cont'd)			
	SN74HC239	TI	
	TC74HC139	**Toshiba (1363)**	
	US74HC139	Universal	
HCT	54HCT139	† CTI	130
	54HCT239	† CTI	
	74HCT139	CTI	
	74HCT239	CTI	
	MD54HCT139R	† Mitel	
	MD74HCT139R	Mitel	135
	MM54HCT139	† National	
	MM54HCT155	† National	
	MM74HCT139	National	
	MM74HCT155	National	
	MV74HCT139	Plessey	140
	CD54HCT139	† **RCA (1150)**	
	CD74HCT139	**RCA (1150)**	
	KS74HCTLS139	**Samsung (1153)**	
	KS74HCTLS155	**Samsung (1153)**	
	KS74HCTLS239	**Samsung (1153)**	145
	SP74HCT139	SPI	
	74HCT139	**Signetics (1157)**	
	SS54HCT139	† SSS	
	SS54HCT239	† SSS	
	SS74HCT139	SSS	150
	SS74HCT239	SSS	
	54HCT139	† Supertex	
	54HCT239	† Supertex	
	74HCT139	Supertex	
	74HCT239	Supertex	155
	ZX54HCT/LS139	† Zytrex	
	ZX54HCT/LS239	† Zytrex	
	ZX74HCT/LS139	Zytrex	
	ZX74HCT/LS239	Zytrex	
SC	G74SC139	GTEMicro	160
	MV74SC239	Plessey	
	SP74SC139	SPI	
	74SC139	Supertex	
	74SC239	Supertex	
40HXXX	LR40H139	Sharp	165
	TC40H139	**Toshiba (1363)**	
Dual 2-Line to 4-Line Decoder/Demultiplexer. Totem Pole Output. (or 3-Lint to 8-Line Decoder/Demultiplexer)			
40HXXX	LR40H155	Sharp	
	TC40H155	**Toshiba (1363)**	
8-Line to 8-Line Priority Encoder			
HC	MM54HC149	† National	
	MM74HC149	National	170
1 of 8 Decoder/Demultiplexer (high)			
HC	SP74HC238	SPI	
1 of 8 Strobed			
4XXX	883C4428B	† SSS	
	BCL4428B	SSS	
	SCL4428B	SSS	
3-Line to 8-Line Decoder			
HC	**74HC227**	**Signetics (1157)**	175
HCT	**74HCT227**	**Signetics (1157)**	
3-Line to 8-Line Decoder/Demultiplexer			
	MM74PC138	National	
AC	**54AC138**	† **Fairchild (1011,1015)**	
	74AC138	**Fairchild (1011,1015)**	
ACT	**54ACT138**	† **Fairchild (1012,1015)**	180
	74ACT138	**Fairchild (1012,1015)**	
(Continued)			

† Military Temperature Range (−55° to 125°C)

* Typical Value

Bold face indicates additional data is provided on the page noted.

DIGITAL–CMOS (Cont'd)

Decoders (Cont'd)

Function	Device	Source	Line
3-Line to 8-Line Decoder/Demultiplexer (Cont'd)			
AHCT	IDT54AHCT138	† IDT	
C	**HS54C138RH**	**Harris (630)**	
FCT	74HC138	IDT	
	IDT54FCT138	† IDT	
	IDT74HCT138	IDT	5
HC	54HC138	† Fairchild	
	74HC138	Fairchild	
	GD74HC138	**Goldstar (1066)**	
	HD74HC138	Hitachi	
	HD74HC238	Hitachi	10
	IDT74AHCT138	IDT	
	MC54HC138	**† Motorola (1130)**	
	MC74HC138	**Motorola (1130)**	
	MM54HC138	† National	
	MM74HC138	National	15
	MN74HC138	Panasonic	
	CD54HC138	**† RCA (1150)**	
	CD54HC238	**† RCA (1150)**	
	CD54HCT238	**† RCA (1150)**	
	CD74HC138	**RCA (1150)**	20
	CD74HC238	**RCA (1150)**	
	CD74HCT238	**RCA (1150)**	
	74HC138	Samsung	
	KS74HCTLS238	**Samsung (1153)**	
	SP74HC138	SPI	25
	M74HC138	SGS	
	LR74HC138	Sharp	
	74HC138	**Signetics (1157)**	
	74HC238	**Signetics (1157)**	
	SS54HC138	† SSS	30
	SS54HC238	† SSS	
	SS74HC138	SSS	
	SS74HC238	SSS	
	SN54HC138	**† TI (714)**	
	SN74HC138	TI	35
	TC74HC138	**Toshiba (1363)**	
	US74HC138	Universal	
HCT	54HCT138	† CTI	
	54HCT238	† CTI	
	74HCT138	CTI	40
	74HCT238	CTI	
	HD74HCT138	Hitachi	
	74HCTR138	MicroTech	
	MD54HCT138R	† Mitel	
	MD74HCT138R	Mitel	45
	M74HC138	Mitsubishi	
	MC54HCT138	† Motorola	
	MC74HCT138	Motorola	
	MM54HCT138	† National	
	MM74HCT138	National	50
	MV74HCT138	Plessey	
	MV74HCT238	Plessey	
	CD54HCT138	**† RCA (1150)**	
	CD74HCT138	**RCA (1150)**	
	KS74HCTLS138	**Samsung (1153)**	55
	SP74HCT138	SPI	
	M74HCT137	SGS	
	74HCT138	**Signetics (1157)**	
	74HCT238	**Signetics (1157)**	
	SS54HCT138	† SSS	60
	SS54HCT238	† SSS	
	SS74HCT138	SSS	
	SS74HCT238	SSS	
	54HCT138	† Supertex	
	54HCT238	† Supertex	65
	74HCT138	Supertex	
	74HCT238	Supertex	
	SN54HCT138	**† TI (714)**	
	SN74HCT138	TI	
	TC74HCT138	**Toshiba (1363)**	70
		(Continued)	

Function	Device	Source	Line
3-Line to 8-Line Decoder/Demultiplexer			
HCT (Cont'd)			
	US74HCT138	Universal	
	ZX54HCT/LS138	† Zytrex	
	ZX54HCT/LS238	† Zytrex	
	ZX74HCT/LS138	Zytrex	
	ZX74HCT/LS238	Zytrex	75
SC	G74SC138	GTEMicro	
	SP74SC138	SPI	
	74SC138	Supertex	
	74SC238	Supertex	
40HXXX	LR40H138	Sharp	80
	TC40H138	**Toshiba (1363)**	
3-Line to 8-Line Decoder/Demultiplexer, Non-Inverting			
AHCT	**KS74AHCT238**	**Samsung (1153)**	
HC	M74HC237	Mitsubishi	
	SS54HC237	† SSS	
	SS74HC237	SSS	85
	SN54HC237	**† TI (714)**	
	SN54HC238	**† TI (714)**	
	SN74HC237	TI	
	SN74HC238	TI	
	TC74HC237	**Toshiba (1363)**	90
	TC74HC238	**Toshiba (1363)**	
HCT	HD74HCT237	Hitachi	
	HD74HCT238	Hitachi	
	SS54HCT237	† SSS	
	SS74HCT237	SSS	95
	SN54HCT237	**† TI (714)**	
	SN54HCT238	**† TI (714)**	
	SN74HCT237	TI	
	SN74HCT238	TI	
3-Line to 8-Line Decoder/Demultiplexer with Input Latches			
HC	HD74HC137	Hitachi	100
	HD74HC237	Hitachi	
	MC54HC137	† Motorola	
	MC54HC237	† Motorola	
	MC74HC137	Motorola	
	MC74HC237	Motorola	105
	MM54HC137	† National	
	MM54HC237	† National	
	MM74HC137	National	
	MM74HC237	National	
	CD54HC137	**† RCA (1150)**	110
	CD54HC237	**† RCA (1150)**	
	CD74HC137	**RCA (1150)**	
	CD74HC237	**RCA (1150)**	
	74HC137	Samsung	
	74HC237	Samsung	115
	M74HC137	SGS	
	M74HC237	SGS	
	74HC137	**Signetics (1157)**	
	SS54HC137	† SSS	
	SS74HC137	SSS	120
	SN54HC137	**† TI (714)**	
	SN74HC137	TI	
	TC74HC137	**Toshiba (1363)**	
	US74HC137	Universal	
	US74HC237	Universal	125
HCT	54HCT137	† CTI	
	54HCT237	† CTI	
	74HCT137	CTI	
	74HCT237	CTI	
	HD74HCT137	Hitachi	130
	74HCTR137	MicroTech	
	MV74HCT137	Plessey	
	MV74HCT237	Plessey	
	CD54HCT137	**† RCA (1150)**	
	CD54HCT237	**† RCA (1150)**	135
	CD74HCT137	**RCA (1150)**	
	CD74HCT237	**RCA (1150)**	
	74HCT137	**Signetics (1157)**	
		(Continued)	

Function	Device	Source	Line
3-Line to 8-Line Decoder/Demultiplexer with Input Latches			
HCT (Cont'd)			
	SS54HCT137	† SSS	
	SS74HCT137	SSS	140
	54HCT137	† Supertex	
	54HCT237	† Supertex	
	74HCT137	Supertex	
	74HCT237	Supertex	
	SN54HCT137	**† TI (714)**	145
	SN74HCT137	TI	
	TC74HCT137	**Toshiba (1363)**	
	US74HCT137	Universal	
	US74HCT237	Universal	
SC	G74SC137	GTEMicro	150
	MV74SC137	Plessey	
	MV74SC237	Plessey	
	74SC137	Supertex	
	74SC237	Supertex	
3-Line to 8-Line Decoder/Latch			
HC	**TC74HC131**	**Toshiba (1363)**	155
4-Bit Latch/4-to-16-Line Decoder (high)			
HC	HD74HC4514	Hitachi	
	MC54HC4514	**† Motorola (1130)**	
	MC54HC4515	† Motorola	
	MC74HC4514	**Motorola (1130)**	
	MC74HC4515	Motorola	160
	MM54HC4514	† National	
	MM74HC4514	National	
	CD54HC4514	**† RCA (1150)**	
	CD54HC4515	**† RCA (1150)**	
	CD74HC4514	**RCA (1150)**	165
	CD74HC4515	**RCA (1150)**	
	M74HC4514	SGS	
	74HC4514	**Signetics (1161)**	
	74HC4515	**Signetics (1161)**	
	US74HC4514	Universal	170
HCT	**CD54HCT4514**	**† RCA (1150)**	
	CD54HCT4515	**† RCA (1150)**	
	CD74HCT4514	**RCA (1150)**	
	CD74HCT4515	**RCA (1150)**	
	74HCT4514	**Signetics (1161)**	175
	74HCT4515	**Signetics (1161)**	
	US74HCT4514	Universal	
4XXX	F4514BC	Fairchild	
	F4514BM	† Fairchild	
	F4515BC	Fairchild	180
	F4515BM	† Fairchild	
	MC14514BA	**† Motorola (1130)**	
	MC14514BC	**Motorola (1130)**	
	MC14515BA	**† Motorola (1130)**	
	MC14515BC	**Motorola (1130)**	185
	CD4514BC	National	
	CD4514BM	† National	
	CD4515BC	National	
	CD4515BM	† National	
	CD4514B	**† RCA (704,1145)**	190
	CD4514BE	**RCA (704,1145)**	
	CD4515B	**† RCA (704,1145)**	
	CD4515BE	**RCA (704,1145)**	
	HCC4514B	† SGS	
	HCC4515B	† SGS	195
	HCF4514B	SGS	
	HCF4515B	SGS	
	HEF4514B	Signetics	
	HEF4515B	Signetics	
	CM4514B	Solitron	200
	CM4514BE	Solitron	
	CM4515B	† Solitron	
	CM4515BE	Solitron	
	883C4514B	SSS	
	883C4515B	† SSS	205
	BCL4514B	SSS	
		(Continued)	

† Military Temperature Range (−55° to 125°C)

* Typical Value

Bold face indicates additional data is provided on the page noted.

DIGITAL-CMOS (Cont'd)

Function	Device	Source	Line
Decoders (Cont'd)			
4-Bit Latch/4-to-16-Line Decoder (high)			
4XXX		(Cont'd)	
	BCL4515B	SSS	
	SCL4514B	SSS	
	SCL4515B	SSS	
	TC4514B	**Toshiba** (1363)	
	TC4515B	**Toshiba** (1363)	5
4-Line to 16-Line Decoder/Demultiplexer, Inverting			
HC	HD74HC4515	Hitachi	
	SN74HC4515	TI	
	TC74HC4515	**Toshiba** (1363)	
4-Line to 16-Line Decoder/Demultiplexer, Non-Inverting			
HC	M74HC4514	Mitsubishi	
	LR74HC4514	Sharp	10
	SN74HC4514	TI	
	TC74HC4514	**Toshiba** (1363)	
4-Line-to-16-Line Decoder/Demultiplexer			
AHCT	**KS74AHCT154**	**Samsung** (1153)	
C	MM54C154	† National	
	MM74C154	National	15
HC	54HC154	† Fairchild	
	54HC4514	† Fairchild	
	74HC154	Fairchild	
	74HC4514	Fairchild	
	HD74HC154	Hitachi	20
	M74HC154	Mitsubishi	
	MC54HC154	† **Motorola** (1130)	
	MC74HC154	**Motorola** (1130)	
	MM54HC154	† National	
	MM74HC154	National	25
	MN74HC154	Panasonic	
	CD54HC154	† **RCA** (1150)	
	CD74HC154	**RCA** (1150)	
	M74HC154	SGS	
	74HC154	**Signetics** (1157)	30
	SN74HC154	TI	
	TC74HC154	**Toshiba** (1363)	
	US74HC154	Universal	
HCT	74HCTR154	MicroTech	
	CD54HCT154	† **RCA** (1150)	35
	CD74HCT154	**RCA** (1150)	
	74HCT154	**Signetics** (1157)	
8 to 3-Line Priority Encoder			
HC	SP74HC148	SPI	
	TC74HC148	**Toshiba** (1363)	
HCT	74HCTR148	MicroTech	40
8-Line to 8-Line Priority Encoder			
HCT	MM54HCT149	† National	
	MM74HCT149	National	
10-Line to 4-Line Priority Encoder			
HC	HD74HC147	Hitachi	
	MC54HC147	† **Motorola** (1131)	
	MC74HC147	**Motorola** (1131)	45
	CD54HC147	† **RCA** (1150)	
	CD74HC147	**RCA** (1150)	
	SP74HC147	SPI	
	M74HC147	SGS	
	74HC147	**Signetics** (1157)	50
	SS54HC147	† SSS	
	SS74HC147	SSS	
	US74HC147	Universal	
HCT	**CD54HCT147**	† **RCA** (1150)	
	CD74HCT147	**RCA** (1150)	55
	74HCT147	**Signetics** (1157)	
	SS54HCT147	† SSS	
	SS74HCT147	SSS	
	US74HCT147	Universal	
Drivers			
Also See: Interface—Display Drivers, Memory and Peripheral Drivers			60
Bus, Bidirectional	HD6432-2	† Harris	
Bus, Latching	HD6431-2	† Harris	
Bus Separator/Driver			
	HD6433-2	† Harris	
LCD, Dot Matrix	HLCD0488	Hughes	
	HLCD0538A	Hughes	65
	HLCD0539A	Hughes	
	HLCD0540	Hughes	
	HLCD0541	Hughes	
	HLCD0542	Hughes	
	HLCD0548	Hughes	70
	HLCD0550	Hughes	
	HLCD0551	Hughes	
	HLCD0607	Hughes	
LCD, BCD-to-7-Segment Decoder/Driver with "Display Frequency Output"			
4XXX	**CD4055B**	† **RCA** (1147)	
	CD4055BE	**RCA** (1147)	75
	HCC4055B	† SGS	
	HCF4055B	SGS	
	TC4055B	**Toshiba** (1363)	
LCD, BCD-to-7-Segment Decoder/Driver with Strobed-Latch Function			
4XXX	**CD4056B**	† **RCA** (1147)	
	CD4056BE	**RCA** (1147)	80
	HCC4056B	† SGS	
	HCF4056B	SGS	
	TC4056B	**Toshiba** (1363)	
LCD, BCD-to-7-Segment Latch/Decoder/Driver			
HC	HD74HC4543	Hitachi	
	MC54HC4543	† **Motorola** (1130)	85
	MC74HC4543	**Motorola** (1130)	
	CD54HC4543	† **RCA** (1150)	
	CD74HC4543	**RCA** (1150)	
	M74HC4543	SGS	
	74HC4543	**Signetics** (1161)	90
	TC74HC4543	**Toshiba** (1363)	
	US74HC4543	Universal	
HCT	**CD54HCT4543**	† **RCA** (1150)	
	CD74HCT4543	**RCA** (1150)	
	74HCT4543	**Signetics** (1161)	95
	US74HCT4543	Universal	
4XXX	**MC14543BA**	† **Motorola** (1130)	
	MC14543BC	**Motorola** (1130)	
	CD4543BC	National	
	CD4543BM	† National	100
	HEF4543B	Signetics	
	883C4534B	† SSS	
	BCL4543B	SSS	
	SCL4543B	SSS	
	TC4543B	**Toshiba** (1363)	105
LCD, 4-Digit, Microprocessor Interface			
	ICM7211AM	**Intersil** (1091)	
	ICM7211M	**Intersil** (1091)	
	CD22105	**RCA** (1147)	
	CD22105A	**RCA** (1147)	
LCD, 4-Digit Multiplex Input			
	HLCD0437	Hughes	110
LCD, 4-Digit, Multiplexed BCD to LCD Decoder/Driver, AC Drive	**ICM7211**	**Intersil** (1091)	
	ICM7211A	**Intersil** (1091)	
	CD22104	**RCA** (1147)	
	CD22104A	**RCA** (1147)	
LCD, 4-Digit Serial Input			
	HLCD0438A	Hughes	115
LCD, 4-Line			
4XXX	**CD4054B**	† **RCA** (1147)	
	CD4054BE	**RCA** (1147)	
	HCC4054B	† SGS	
	HCF4054B	SGS	
	TC4054B	**Toshiba** (1363)	120
LED, 4-Digit Multiplexed BCD or Binary to 7-Segment Decoder/Driver	**ICM7212**	**Intersil** (1091)	
	ICM7212A	**Intersil** (1091)	
	ICM7212	Maxim	
	ICM7212A	Maxim	
LED, 4-Digit BCD or Binary to 7-Segment Decoder/Driver, Data and Digit Select Input Latches for μP Interface			
	ICM7212AM	**Intersil** (1091)	125
	ICM7212M	**Intersil** (1091)	
LED, 4-Digit, 17-Segment Alphanumeric Display with Memory, Decoder			
C	MM74C956	National	
BCD (hexadecimal) to 7-Segment Latch/Decoder/Driver			
4XXX	**MC14495**	**Motorola** (1130)	
BCD-to-7-Segment Latch/Decoder/Driver			
HC	HD74HC4511	Hitachi	
	M74HC4511	† Mitsubishi	130
	MC54HC4511	† **Motorola** (1130)	
	MC74HC4511	**Motorola** (1130)	
	MM54HC4511	† National	
	MM54HC4543	† National	
	MM74HC4511	National	135
	MM74HC4543	National	
	CD54HC4511	† **RCA** (1150)	
	CD74HC4511	**RCA** (1150)	
	M74HC4511	SGS	
	LR74HC4511	Sharp	140
	74HC4511	**Signetics** (1161)	
	TC74HC4511	**Toshiba** (1363)	
	US74HC4511	Universal	
HCT	**CD54HCT4511**	† **RCA** (1150)	
	CD74HCT4511	**RCA** (1150)	145
	74HCT4511	**Signetics** (1161)	
	US74HCT4511	Universal	
4XXX	F4511BC	Fairchild	
	F4511BM	† Fairchild	
	F4734BC	† Fairchild	150
	F4734BM	Fairchild	
	MC14511BA	† **Motorola** (1130)	
	MC14511BC	**Motorola** (1130)	
	MC14513BA	† **Motorola** (1130)	
	MC14513BC	**Motorola** (1130)	155
	CD4511BC	National	
	CD4511BM	† National	
	MN4511B	† Panasonic	
	CD4511B	† **RCA** (1147)	
	CD4511BE	**RCA** (1147)	160
	HCC4511B	† SGS	
	HCF4511B	SGS	
	HEF4511B	Signetics	
	CM4511B	† Solitron	
	CM4511BE	Solitron	165
	883C4511B	† SSS	
	BCL4511B	SSS	
	SCL4511B	SSS	
	TC4511B	**Toshiba** (1363)	
5XXX	TC5022B	Toshiba	170
	TC5068B	Toshiba	
	TC5069B	Toshiba	
Dual and Quad Line Drivers-See Miscellaneous			
Dual High Voltage, Source 250 mA			
C	MM74C908	National	
	MM74C918	National	175
Hex Buffer/Driver, Three-State			
	HD6495-2	† Harris	

† Military Temperature Range (−55° to 125°C)

* Typical Value

Bold face indicates additional data is provided on the page noted.

DIGITAL–CMOS (Cont'd)

Drivers (Cont'd)

Function	Device	Source	Line
Hex 2-Input AND Driver			
HC	SN74HC808	TI	
Hex 2-Input NAND Driver			
HC	SN74HC804	TI	
Hex 2-Input NOR Driver			
HC	SN74HC805	TI	
Hex 2-Input OR Driver			
HC	SN74HC832	TI	
One-of-Eight Decoder/Driver, Latched			
	HD6440-2	† Harris	5
4-Digit Display (stores segment and address data, drives 7-8 segment digits)			
C	MM74C911	National	
6-Digit BCD Display (stores segment and address data, drives 7-8 segment digits)			
C	MM74C912	National	
6-Digit Hex Display (stores segment and address data, drives 7-segment digits)			
C	MM74C917	National	
7-Segment to BCD Converter/Driver			
C	MM54C915	† National	
	MM74C915	National	10

Flip-Flops, D-Type

Function	Device	Source	Line
Dual	MM74PC74	National	
AC	**54AC74**	**† Fairchild (1011,1013)**	
	74AC74	**Fairchild (1011,1013)**	
AHCT	**KS74AHCT74**	**Samsung (1153)**	
C	MM54C74	† National	15
	MM74C74	National	
HC	54HC74	† Fairchild	
	74HC74	Fairchild	
	GD74HC74	**Goldstar (1066)**	
	HD74HC74	Hitachi	20
	M74HC74	Mitsubishi	
	MC54HC74	**† Motorola (1126)**	
	MC74HC74	**Motorola (1126)**	
	MM54HC74	† National	
	MM74HC74	National	25
	MN74HC74	Panasonic	
	CD54HC74	**† RCA (1149)**	
	CD74HC74	**RCA (1149)**	
	SP74HC74	SPI	
	M74HC74	SGS	30
	LR74HC74	Sharp	
	74HC74	**Signetics (1156)**	
	SS54HC74	† SSS	
	SS74HC74	SSS	
	SN54HC74	**† TI (714)**	35
	SN74HC74	TI	
	TC74HC74	**Toshiba (1363)**	
	US74HC74	Universal	
HCT	**GD74HCT74**	**Goldstar (1066)**	
	MM54HCT74	† National	40
	MM74HCT74	National	
	CD54HCT74	**† RCA (1149)**	
	CD74HCT74	**RCA (1149)**	
	KS74HCTLS74	**Samsung (1153)**	
	74HCT74	**Signetics (1156)**	45
	SS54HCT74	† SSS	
	SS74HCT74	SSS	
	US74HCT74	Universal	
	ZX54HCT/LS74	† Zytrex	
	ZX74HCT/LS74	Zytrex	50
		(Continued)	
Dual		(Cont'd)	
4XXX	F4013BC	Fairchild	
	F4013BM	† Fairchild	
	MC14013BA	**† Motorola (1126)**	
	MC14013BC	**Motorola (1126)**	
	CD4013BC	National	55
	CD4013BM	† National	
	MN4013B	† Panasonic	
	CD4013A	**† RCA (704,1146)**	
	CD4013AE	**RCA (704,1146)**	
	CD4013B	**† RCA (704,1146)**	60
	CD4013BE	**RCA (704,1146)**	
	LC4013B	Sanyo	
	HCC4013B	† SGS	
	HCF4013B	SGS	
	HEF4013B	Signetics	65
	CM4013A	† Solitron	
	CM4013AE	Solitron	
	CM4013B	† Solitron	
	CM4013BE	Solitron	
	883C4013B	† SSS	70
	BCL4013B	SSS	
	SCL4013B	SSS	
	TC4013B	**Toshiba (1363)**	
40HXXX	LR40H074	Sharp	
	TC40H074	**Toshiba (1363)**	75
Dual 4-Bit			
ACT	**V54ACT874**	**† VTC (1367,1373)**	
	V54ACT876	**† VTC (1367,1373)**	
	V54ACT878	**† VTC (1367,1373)**	
	V54ACT879	**† VTC (1367,1373)**	
	V74ACT874	**VTC (1367,1373)**	80
	V74ACT876	**VTC (1367,1373)**	
	V74ACT878	**VTC (1367,1373)**	
	V74ACT879	**VTC (1367,1373)**	
Quad			
AC	**54AC175**	**† Fairchild (1011,1013)**	
	74AC175	**Fairchild (1011,1013)**	85
AHCT	**KS74AHCT175**	**Samsung (1153)**	
C	MM54C175	† National	
	MM74C175	National	
HC	54HC175	† Fairchild	
	74HC175	Fairchild	90
	GD74HC175	**Goldstar (1066)**	
	HD74HC175	Hitachi	
	M74HC175	Mitsubishi	
	MC54HC175	**† Motorola (1126)**	
	MC74HC175	**Motorola (1126)**	95
	MM54HC175	† National	
	MM74HC175	National	
	CD54HC175	**† RCA (1149)**	
	CD74HC175	**RCA (1149)**	
	SP74HC175	SPI	100
	M74HC175	SGS	
	LR74HC175	Sharp	
	74HC175	**Signetics (1157)**	
	SS54HC175	† SSS	
	SS74HC175	SSS	105
	SN54HC175	**† TI (714)**	
	SN74HC175	TI	
	TC74HC175	**Toshiba (1363)**	
	US74HC175	Universal	
HCT	**GD74HCT175**	**Goldstar (1066)**	110
	CD54HCT175	**† RCA (1149)**	
	CD74HCT175	RCA	
	KS74HCTLS175	**Samsung (1153)**	
	74HCT175	**Signetics (1157)**	
	SS54HCT175	† SSS	115
	SS74HCT175	SSS	
	US74HCT175	Universal	
		(Continued)	
Quad		(Cont'd)	
4XXX	F40175BC	Fairchild	
	F40175BM	† Fairchild	
	MC14175BA	**† Motorola (1126)**	120
	MC14175BC	**Motorola (1126)**	
	CD40175B	National	
	CD40175B	**† RCA (1146)**	
	CD40175BE	**RCA (1146)**	
	HEF40175B	Signetics	125
	TC40175B	**Toshiba (1363)**	
40HXXX	LR40H175	Sharp	
	TC40H175	**Toshiba (1363)**	
Quad with Enable			
HC	**SN54HC379**	**† TI (714)**	
	SN74HC379	TI	130
Quad Three-State			
AHCT	**KS74AHCT173**	**Samsung (1153)**	
C	MM54C173	† National	
	MM74C173	National	
HC	54HC173	† Fairchild	
	74HC173	Fairchild	135
	GD74HC173	**Goldstar (1066)**	
	HD74HC173	Hitachi	
	M74HC173	Mitsubishi	
	MC54HC173	**† Motorola (1126)**	
	MC74HC173	**Motorola (1126)**	140
	MM54HC173	† National	
	MM74HC173	National	
	CD54HC173	**† RCA (1149)**	
	CD74HC173	**RCA (1149)**	
	SP74HC173	SPI	145
	M74HC173	SGS	
	LR74HC173	Sharp	
	74HC173	**Signetics (1157)**	
	SN54HC173	**† TI (714)**	
	SN74HC173	TI	150
	TC74HC173	**Toshiba (1363)**	
	US74HC173	Universal	
HCT	**GD74HCT173**	**Goldstar (1066)**	
	CD54HCT173	**† RCA (1149)**	
	CD74HCT173	RCA	155
	74HCT173	**Signetics (1157)**	
	US74HCT173	Universal	
4XXX	F4076BC	Fairchild	
	F4076BM	† Fairchild	
	MC14076BA	**Motorola (1126)**	160
	MC14076BC	**Motorola (1126)**	
	CD4076BC	National	
	CD4076BM	† National	
	MN4076B	† Panasonic	
	CD4076B	**† RCA (704,1146)**	165
	CD4076BE	**RCA (704,1146)**	
	HCC4076B	† SGS	
	HCF4076B	SGS	
	HEF4076B	Signetics	
	CM4076A	† Solitron	170
	CM4076AE	Solitron	
	883C4076B	† SSS	
	BCL4076B	SSS	
	SCL4076B	SSS	
	TC4076B	**Toshiba (1363)**	175
Hex			
AC	**54AC174**	**† Fairchild (1011,1013)**	
	74AC174	**† Fairchild (1011,1013)**	
AHCT	**KS74AHCT174**	**Samsung (1153)**	
C	MM54C174	† National	
	MM74C174	National	180
		(Continued)	

† Military Temperature Range (−55° to 125°C)

* Typical Value

Bold face indicates additional data is provided on the page noted.

DIGITAL-CMOS (Cont'd)

Flip-Flops, D-Type (Cont'd)

Function	Device	Source	Line
Hex (Cont'd)			
HC	**GD74HC174**	**† Goldstar (1066)**	
	HD74HC174	† Hitachi	
	M74HC174	Mitsubishi	
	MC54HC174	**† Motorola (1126)**	
	MC74HC174	**† Motorola (1126)**	5
	MM54HC174	† National	
	MM74HC174	National	
	MN74HC174	† Panasonic	
	CD54HC174	**† RCA (1149)**	
	CD74HC174	**† RCA (1149)**	10
	SP74HC174	SPI	
	M74HC174	† SGS	
	LR74HC174	Sharp	
	74HC174	† Signetics	
	SS54HC174	† SSS	15
	SS74HC174	† SSS	
	SN54HC174	**† TI (714)**	
	SN74HC174	TI	
	TC74HC174	**† Toshiba (1363)**	
	US74HC174	† Universal	20
HCT	**GD74HCT174**	**† Goldstar (1066)**	
	MM54HCT174	† National	
	MM74HCT174	National	
	CD54HCT174	**† RCA (1149)**	
	CD74HCT174	RCA	25
	KS74HCTLS174	**Samsung (1153)**	
	74HCT174	† Signetics	
	SS54HCT174	† SSS	
	SS74HCT174	SSS	
	US74HCT174	Universal	30
4XXX	F40174BC	Fairchild	
	F40174BM	† Fairchild	
	MC14174BA	**† Motorola (1126)**	
	MC14174BC	**Motorola (1126)**	
	CD40174BC	National	35
	CD40174BM	† National	
	CD40174B	**† RCA (704,1146)**	
	CD40174BE	**RCA (704,1146)**	
	HCC40174B	† SGS	
	HCF40174B	SGS	40
	HEF40174B	Signetics	
	883C4174B	† SSS	
	BCL4174B	SSS	
	SCL4174B	SSS	
	TC40174B	**Toshiba (1363)**	45
40HXXX	LR40H174	Sharp	
	TC40H174	**Toshiba (1363)**	
Hex with Enable			
HC	**SN54HC378**	**† TI (714)**	
	SN74HC378	TI	
Octal Edge-Triggered with Clear			
AC	**54AC273**	**† Fairchild (1011,1013)**	50
	74AC273	**Fairchild (1011,1013)**	
AHCT	**KS74AHCT273**	**Samsung (1153)**	
FCT	74HC273	IDT	
	IDT54FCT273	† IDT	
	IDT74FCT273	IDT	55
HC	54HC273	† Fairchild	
	74HC273	Fairchild	
	GD74HC273	**Goldstar (1066)**	
	HD74HC273	Hitachi	
	IDT54AHCT273	† IDT	60
	IDT74AHCT273	IDT	
	M74HC273	Mitsubishi	
	MC54HC273	**† Motorola (1126)**	
	MC74HC273	**Motorola (1126)**	
	MM54HC273	† National	65
		(Continued)	

Function	Device	Source	Line
Octal Edge-Triggered with Clear			
HC (Cont'd)			
	MM74HC273	National	
	MN74HC273	Panasonic	
	CD54HC273	**† RCA (1149)**	
	CD74HC273	**RCA (1149)**	
	SP74HC273	SPI	70
	M74HC273	SGS	
	74HC273	**Signetics (1158)**	
	SS54HC273	† SSS	
	SS74HC273	SSS	
	SN54HC273	**† TI (714)**	75
	SN74HC273	TI	
	TC74HC273	**Toshiba (1363)**	
	US74HC273	Universal	
HCT	**GD74HCT273**	**Goldstar (1066)**	
	74HCTR273	MicroTech	80
	MM54HCT273	† National	
	MM74HCT273	National	
	CD54HCT273	**† RCA (1149)**	
	CD74HCT273	RCA	
	KS74HCTLS273	**Samsung (1153)**	85
	74HCT273	**Signetics (1158)**	
	SS54HCT273	† SSS	
	SS74HCT273	SSS	
	54HCT273	† Supertex	
	74HCT273	Supertex	90
	US74HCT273	Universal	
	ZX54HCT/LS273	† Zytrex	
	ZX74HCT/LS273	Zytrex	
SC	74SC273	Supertex	
40HXXX	**TC40H273**	**Toshiba (1363)**	95
Octal, TTL Input, Three-State			
HC	MM54HC4304	† National	
	MM74HC4304	National	
Octal, TTL Input, Three-State, Inverting			
HC	MM54HC4303	† National	
	MM74HC4303	National	
Octal with Enable			
FCT	74HC377	IDT	100
	IDT54FCT377	† IDT	
	IDT54FCT521	† IDT	
	IDT74FCT377	IDT	
	IDT74FCT521	IDT	
HC	**GD74HC377**	**Goldstar (1066)**	105
	HD74HC377	Hitachi	
	IDT54AHCT377	† IDT	
	IDT74AHCT377	IDT	
	CD54HC377	**† RCA (1149)**	
	CD74HC377	**RCA (1149)**	110
	74HC377	**Signetics (1158)**	
	SS54HC377	† SSS	
	SS74HC377	SSS	
	SN54HC377	**† TI (714)**	
	SN74HC377	TI	115
	TC74HC377	**Toshiba (1363)**	
	US74HC377	Universal	
HCT	GD74HCT377	Goldstar	
	CD54HCT377	**† RCA (1149)**	
	CD74HCT377	RCA	120
	74HCT377	**Signetics (1158)**	
	SS54HCT377	† SSS	
	SS74HCT377	SSS	
	US74HCT377	Universal	
Octal Three-State, Inverting			
AC	**54AC564**	**† Fairchild (1012,1013)**	125
	74AC564	**Fairchild (1012,1013)**	
		(Continued)	

Function	Device	Source	Line
Octal Three-State, Inverting (Cont'd)			
ACT	**54ACT564**	**† Fairchild (1012,1013)**	
	74ACT564	**Fairchild (1012,1013)**	
	V54ACT534	**† VTC (1367,1372)**	
	V54ACT564	**† VTC (1373)**	130
	V54ACT576	**† VTC (1367,1373)**	
	V54ACT826	**† VTC (1367,1373)**	
	V74ACT534	**VTC (1367,1373)**	
	V74ACT564	**VTC (1373)**	
	V74ACT576	**VTC (1367,1373)**	135
	V74ACT826	**VTC (1367,1373)**	
AHCT	**KS74AHCT534**	**Samsung (1153)**	
	KS74AHCT564	**Samsung (1153)**	
FCT	74HC534	IDT	
	IDT54FCT534	† IDT	140
	IDT74FCT534	IDT	
HC	54HC534	† Fairchild	
	54HC564	† Fairchild	
	74HC534	Fairchild	
	74HC564	Fairchild	145
	HD74HC534	Hitachi	
	HD74HC564	Hitachi	
	IDT54AHCT534	† IDT	
	IDT74AHCT534	IDT	
	M74HC534	Mitsubishi	150
	M74HC564	Mitsubishi	
	MC54HC534	**† Motorola (1127)**	
	MC54HC564	**† Motorola (1127)**	
	MC74HC534	**Motorola (1127)**	
	MC74HC564	**Motorola (1127)**	155
	MM54HC534	† National	
	MM54HC564	† National	
	MM74HC534	National	
	MM74HC564	National	
	CD54HC534	**† RCA (1149)**	160
	CD54HC564	**† RCA (1149)**	
	CD74HC534	**RCA (1149)**	
	CD74HC564	**RCA (1149)**	
	74HC534	Samsung	
	74HC564	Samsung	165
	SP74HC534	SPI	
	M74HC534	SGS	
	M74HC564	SGS	
	LR74HC534	Sharp	
	74HC534	**Signetics (1159)**	170
	74HC564	**Signetics (1159)**	
	SS54HC534	† SSS	
	SS54HC564	† SSS	
	SS74HC534	SSS	
	SS74HC564	SSS	175
	SN54HC534	**† TI (714)**	
	SN74HC534	TI	
	SN74HC564	TI	
	TC74HC534	**Toshiba (1363)**	
	TC74HC564	**Toshiba (1363)**	180
	US74HC534	Universal	
	US74HC564	Universal	
HCT	54HCT534	† CTI	
	54HCT564	† CTI	
	74HCT534	CTI	185
	74HCT564	CTI	
	HD74HCT534	Hitachi	
	HD74HCT564	Hitachi	
	MIC74HCT534	Micrel	
	MIC74HCT564	Micrel	190
	74HCTR534	MicroTech	
	74HCTR564	MicroTech	
	MC54HCT534	† Motorola	
	MC74HCT534	Motorola	
	MM54HCT534	† National	195
	MM74HCT534	National	
		(Continued)	

† Military Temperature Range (−55° to 125°C)

* Typical Value

Bold face indicates additional data is provided on the page noted.

DIGITAL-CMOS (Cont'd)

Flip-Flops, D-Type (Cont'd)

Function	Device	Source	Line
Octal Three-State, Inverting			
HCT		(Cont'd)	
	MV74HCT534	Plessey	
	MV74HCT564	Plessey	
	CD54HCT534	† **RCA (1149)**	
	CD54HCT564	† **RCA (1149)**	
	CD74HCT534	RCA	5
	CD74HCT564	RCA	
	KS74HCTLS534	**Samsung (1153)**	
	KS74HCTLS564	**Samsung (1153)**	
	74HCT534	**Signetics (1159)**	
	74HCT564	**Signetics (1159)**	10
	SS54HCT534	† SSS	
	SS54HCT564	† SSS	
	SS74HCT534	SSS	
	SS74HCT564	SSS	
	54HCT534	† Supertex	15
	54HCT564	† Supertex	
	74HCT534	Supertex	
	74HCT56	Supertex	
	SN54HCT534	† TI	
	SN74HCT534	TI	20
	SN74HCT564	TI	
	TC74HCT564	**Toshiba (1363)**	
	US74HCT534	Universal	
	US74HCT564	Universal	
	ZX54HCT/LS534	† Zytrex	25
	ZX54HCT/LS564	† Zytrex	
	ZX74HCT/LS564	Zytrex	
	ZX74HCT534	Zytrex	
SC	SP74SC534	SPI	
	74SC534	Supertex	30
	74SC564	Supertex	
Octal Three-State, Inverting with clear			
ACT	**V54ACT577**	† **VTC (1367,1373)**	
	V74ACT577	**VTC (1367,1373)**	
Octal Three-State, Non-Inverting			
AC	**54AC374**	† **Fairchild (1012,1013)**	
	54AC574	† **Fairchild (1012,1013)**	35
	74AC374	**Fairchild (1012,1013)**	
	74AC574	**Fairchild (1012,1013)**	
ACT	**54ACT374**	† **Fairchild (1012,1013)**	
	54ACT574	† **Fairchild (1012,1013)**	
	74ACT374	**Fairchild (1012,1013)**	40
	74ACT574	**Fairchild (1012,1013)**	
	V54ACT374	† **VTC (1367,1372)**	
	V54ACT574	† **VTC (1367,1373)**	
	V54ACT825	† **VTC (1367,1373)**	
	V74ACT374	**VTC (1367,1372)**	45
	V74ACT574	**VTC (1367,1373)**	
	V74ACT825	**VTC (1367,1373)**	
AHCT	**KS74AHCT374**	**Samsung (1153)**	
	KS74AHCT574	**Samsung (1153)**	
C	MM54C374	† National	50
	MM74C374	National	
FCT	74HC374	IDT	
	IDT54FCT374	† IDT	
	IDT74FCT374	IDT	
HC	54HC374	† Fairchild	55
	54HC574	† Fairchild	
	74HC374	Fairchild	
	74HC574	Fairchild	
		(Continued)	

Function	Device	Source	Line
Octal Three-State, Non-Inverting			
HC		(Cont'd)	
	GD74HC374	**Goldstar (1066)**	
	HD74HC374	Hitachi	60
	HD74HC574	Hitachi	
	IDT54AHCT374	† IDT	
	IDT74AHCT374	IDT	
	M74HC374	Mitsubishi	
	MC54HC374	† **Motorola (1126)**	65
	MC54HC574	† **Motorola (1127)**	
	MC74HC374	**Motorola (1126)**	
	MC74HC574	**Motorola (1127)**	
	MM54HC374	† National	
	MM54HC574	† National	70
	MM74HC374	National	
	MM74HC574	National	
	MN74HC374	Panasonic	
	CD54HC374	† **RCA (1149)**	
	CD54HC574	† **RCA (1149)**	75
	CD74HC374	**RCA (1149)**	
	CD74HC574	**RCA (1149)**	
	74HC374	Samsung	
	74HC574	Samsung	
	SP74HC374	SPI	80
	SP74HC574	SPI	
	M74HC374	SGS	
	M74HC574	SGS	
	LR74HC374	Sharp	
	74HC374	**Signetics (1158)**	85
	74HC574	**Signetics (1159)**	
	SS54HC374	† SSS	
	SS54HC574	† SSS	
	SS74HC374	SSS	
	SS74HC574	SSS	90
	SN54HC374	† **TI (714)**	
	SN54HC574	† **TI (714)**	
	SN74HC374	TI	
	SN74HC574	TI	
	TC74HC374	**Toshiba (1363)**	95
	TC74HC574	**Toshiba (1363)**	
	US74HC374	Universal	
	US74HC574	Universal	
HCT	54HCT374	† CTI	
	54HCT574	† CTI	100
	74HCT374	CTI	
	74HCT574	CTI	
	GD74HCT374	**Goldstar (1066)**	
	HD74HCT374	Hitachi	
	HD74HCT574	Hitachi	105
	MIC74HCT374	Micrel	
	MIC74HCT574	Micrel	
	74HCTR374	MicroTech	
	74HCTR574	MicroTech	
	MD54HCT374R	† Mitel	110
	MD54HCT574R	† Mitel	
	MD74HCT374R	Mitel	
	MD74HCT574R	Mitel	
	MC54HCT374	† Motorola	
	MC74HCT374	Motorola	115
	MM54HCT374	† National	
	MM54HCT574	† National	
	MM74HCT374	National	
	MM74HCT574	National	
	MV74HCT374	Plessey	120
	MV74HCT574	Plessey	
	CD54HCT374	† **RCA (1149)**	
	CD54HCT574	† **RCA (1149)**	
	CD74HCT374	RCA	
	CD74HCT574	RCA	125
	KS74HCTLS374	**Samsung (1153)**	
	KS74HCTLS574	**Samsung (1153)**	
	SP74HCT374	SPI	
	SP74HCT574	SPI	
		(Continued)	

Function	Device	Source	Line
Octal Three-State, Non-Inverting			
HCT		(Cont'd)	
	M74HCT374	SGS	130
	74HCT374	**Signetics (1158)**	
	74HCT574	**Signetics (1159)**	
	SS54HCT374	† SSS	
	SS54HCT574	† SSS	
	SS74HCT374	SSS	135
	SS74HCT574	SSS	
	54HCT374	† Supertex	
	54HCT574	† Supertex	
	74HCT374	Supertex	
	74HCT574	Supertex	140
	SN54HCT374	† **TI (714)**	
	SN74HCT374	TI	
	SN74HCT574	TI	
	TC74HCT574	**Toshiba (1363)**	
	US74HCT374	Universal	145
	US74HCT574	Universal	
	ZX54HCT/LS374	† Zytrex	
	ZX54HCT/LS574	† Zytrex	
	ZX74HCT/LS374	Zytrex	
	ZX74HCT/LS574	Zytrex	150
SC	G74SC374	GTEMicro	
	MV74SC374	Plessey	
	MV74SC574	Plessey	
	SP74SC374	SPI	
	SP74SC574	SPI	155
	74SC374	Supertex	
	74SC574	Supertex	
4XXX	HEF40374B	Signetics	
40HXXX	**TC40H374**	**Toshiba (1363)**	
Octal Three-State, Non-Inverting with clear			
ACT	**V54ACT575**	† **VTC (1367,1373)**	160
	V74ACT575	**VTC (1367,1373)**	
9-Bit Three-State,Inverting			
ACT	**V54ACT824**	† **VTC (1367,1373,1375)**	
	V74ACT824	**VTC (1367,1373,1375)**	

Flip-Flops, J-K Type

Function	Device	Source	Line
AND-Gated Master-Slave			
4XXX	**CD4095B**	† **RCA (704,1146)**	
	CD4095BE	**RCA (704,1146)**	165
	CD4096B	† **RCA (704,1146)**	
	CD4096BE	**RCA (704,1146)**	
	HCC4095B	† SGS	
	HCC4096B	† SGS	
	HCF4096B	SGS	170
Dual			
AC	**54AC109**	† **Fairchild (1011,1013)**	
	74AC109	**Fairchild (1011,1013)**	
AHCT	**KS74AHCT109**	**Samsung (1153)**	
C	MM54C76	† National	
	MM74C76	National	175
HC	54HC109	† Fairchild	
	54HC76	† Fairchild	
	74HC109	Fairchild	
	74HC76	Fairchild	
	HD74HC109	Hitachi	180
	HD74HC76	Hitachi	
	M74HC109	Mitsubishi	
	M74HC76	Mitsubishi	
	MC54HC109	† **Motorola (1126)**	
	MC54HC76	† **Motorola (1126)**	185
	MC74HC109	**Motorola (1126)**	
	MC74HC76	**Motorola (1126)**	
	MM54HC109	† National	
		(Continued)	

† Military Temperature Range (−55° to 125°C)

* Typical Value

Bold face indicates additional data is provided on the page noted.

DIGITAL-CMOS (Cont'd)

Flip-Flops, J-K Type (Cont'd)

Function	Device	Source	Line
Dual			
HC (Cont'd)			
	MM54HC76	† National	
	MM74HC109	National	
	MM74HC76	National	
	MN74HC109	Panasonic	
	MN74HC76	Panasonic	5
	CD54HC109	† **RCA (1149)**	
	CD74HC109	**RCA (1149)**	
	SP74HC109	SPI	
	SP74HC76	SPI	
	M74HC109	SGS	10
	M74HC76	SGS	
	LR74HC109	Sharp	
	LR74HC76	Sharp	
	74HC109	**Signetics (1156)**	
	SN54HC109	† **TI (714)**	15
	SN74HC109	TI	
	SN74HC76	TI	
	TC74HC109	**Toshiba (1363)**	
	TC74HC112	**Toshiba (1363)**	
	TC74HC76	**Toshiba (1363)**	20
	US74HC109	Universal	
HCT	MM54HCT109	† National	
	MM54HCT76	† National	
	MM74HCT109	National	
	MM74HCT76	National	25
	CD54HCT109	† **RCA (1149)**	
	CD74HCT109	RCA	
	KS74HCTLS109	**Samsung (1153)**	
	KS74HCTLS76	**Samsung (1153)**	
	74HCT109	**Signetics (1156)**	30
	US74HCT109	Universal	
	US74HCT76	Universal	
	ZX54HCT/LS76	† Zytrex	
	ZX74HCT/LS76	Zytrex	
4XXX	F4027BC	Fairchild	35
	F4027BM	† Fairchild	
	MC14027BA	† **Motorola (1126)**	
	MC14027BC	**Motorola (1126)**	
	CD4027BC	National	
	CD4027BM	† National	40
	MN4027B	† Panasonic	
	CD4027A	† **RCA (704,1146)**	
	CD4027AE	**RCA (704,1146)**	
	CD4027B	† **RCA (704,1146)**	
	CD4027BE	**RCA (704,1146)**	45
	HCC4027B	† SGS	
	HCF4027B	SGS	
	HEF4027B	Signetics	
	CM4027A	† Solitron	
	CM4027AE	Solitron	50
	883C4027B	† SSS	
	BCL4027B	SSS	
	SCL4027B	SSS	
	TC4027B	**Toshiba (1363)**	
40HXXX	LR40H076	Sharp	55
	TC40H076	**Toshiba (1363)**	
	TC40H076A	**Toshiba (1363)**	
Dual Negative Edge-Triggered, Separate Preset and Clock			
HC	HD74HC113	Hitachi	
	MC54HC113	† **Motorola (1126)**	
	MC74HC113	**Motorola (1126)**	60
	MM54HC113	† National	
	MM74HC113	National	
	SP74HC113	SPI	
	M74HC113	SGS	
	SN54HC113	† **TI (714)**	65
	SN74HC113	TI	
	TC74HC113	**Toshiba (1363)**	

(Continued)

Function	Device	Source	Line
Dual Negative Edge-Triggered, Separate Preset and Clock (Cont'd)			
HCT	ZX54HCT/LS113	† Zytrex	
	ZX74HCT/LS113	Zytrex	
Dual Negative Edge-Triggered with Preset and Clear			
AHCT	**KS74AHCT112**	**Samsung (1153)**	70
HC	54HC112	† Fairchild	
	74HC112	Fairchild	
	GD74HC112	**Goldstar (1066)**	
	HD74HC112	Hitachi	
	M74HC112	Mitsubishi	75
	MC54HC112	† **Motorola (1126)**	
	MC74HC112	**Motorola (1126)**	
	MM54HC112	† National	
	MM74HC112	National	
	MN74HC112	Panasonic	80
	CD54HC112	† **RCA (1149)**	
	CD74HC112	**RCA (1149)**	
	SP74HC112	SPI	
	M74HC112	SGS	
	LR74HC112	Sharp	85
	74HC112	**Signetics (1156)**	
	SN54HC112	† **TI (714)**	
	SN74HC112	TI	
	US74HC112	Universal	
HCT	**GD74HCT112**	**Goldstar (1066)**	90
	MM54HCT112	† National	
	MM74HCT112	National	
	CD54HCT112	† **RCA (1149)**	
	CD74HCT112	RCA	
	KS74HCTLS112	**Samsung (1153)**	95
	74HCT112	**Signetics (1156)**	
	US74HCT112	Universal	
	ZX54HCT/LS112	† Zytrex	
	ZX74HCT/LS112	Zytrex	
Dual Negative Edge-Triggered with Preset, Common Clock and Common Clear			
HC	HD74HC108	Hitachi	100
	HD74HC114	Hitachi	
	HD74HC78	Hitachi	
	SN54HC114	† **TI (714)**	
	SN74HC114	TI	
	SN74HC78	TI	105
HCT	**KS74HCTLS78**	**Samsung (1153)**	
Dual w/o Preset			
AHCT	**KS74AHCT107**	**Samsung (1153)**	
	KS74AHCT73	**Samsung (1153)**	
C	MM54C107	† National	
	MM54C73	† National	110
	MM74C107	National	
	MM74C73	National	
HC	HD74HC107	Hitachi	
	HD74HC73	Hitachi	
	M74HC107	Mitsubishi	115
	M74HC73	Mitsubishi	
	MC54HC107	† **Motorola (1126)**	
	MC54HC73	† **Motorola (1126)**	
	MC74HC107	**Motorola (1126)**	
	MC74HC73	**Motorola (1126)**	120
	MM54HC107	† National	
	MM54HC73	† National	
	MM74HC107	National	
	MM74HC73	National	
	MN74HC107	Panasonic	125
	CD54HC107	† **RCA (1149)**	
	CD54HC73	† **RCA (1149)**	
	CD74HC107	**RCA (1149)**	
	CD74HC73	**RCA (1149)**	
	SP74HC107	SPI	130
	SP74HC73	SPI	
	M74HC107	SGS	
	M74HC73	SGS	

(Continued)

Function	Device	Source	Line
Dual w/o Preset			
HC (Cont'd)			
	74HC107	**Signetics (1156)**	
	74HC73	**Signetics (1156)**	135
	SN54HC107	† **TI (714)**	
	SN74HC107	TI	
	SN74HC73	TI	
	TC74HC107	**Toshiba (1363)**	
	TC74HC73	**Toshiba (1363)**	140
	US74HC107	Universal	
	US74HC73	Universal	
HCT	MM54HCT107	† National	
	MM74HCT107	National	
	CD54HCT107	† **RCA (1149)**	145
	CD54HCT73	† **RCA (1149)**	
	CD74HCT107	RCA	
	CD74HCT73	**RCA (1149)**	
	KS74HCTLS107	**Samsung (1153)**	
	KS74HCTLS73	**Samsung (1153)**	150
	74HCT107	**Signetics (1156)**	
	74HCT73	**Signetics (1156)**	
	US74HCT107	Universal	
	US74HCT73	Universal	
	ZX54HCT/LS107	† Zytrex	155
	ZX54HCT/LS73	† Zytrex	
	ZX74HCT/LS107	Zytrex	
	ZX74HCT/LS73	Zytrex	
40HXXX	LR40H107	Sharp	
	TC40H107	**Toshiba (1363)**	160
	TC40H107A	**Toshiba (1363)**	

Gates, AND

Function	Device	Source	Line
Dual 4-Input			
HC	**GD74HC21**	**Goldstar (1066)**	
	HD74HC21	Hitachi	
	CD54HC21	† **RCA (1149)**	
	CD74HC21	**RCA (1149)**	165
	74HC21	**Signetics (1156)**	
	SN54HC21	† **TI (714)**	
	SN74HC21	TI	
	TC74HC21	**Toshiba (1363)**	
	US74HC21	Universal	170
HCT	**GD74HCT21**	**Goldstar (1066)**	
	CD54HCT21	† **RCA (1149)**	
	CD74HCT21	**RCA (1149)**	
	74HCT21	**Signetics (1156)**	
	US74HCT21	Universal	175
4XXX	F4082BC	Fairchild	
	F4082BM	† Fairchild	
	MC14082BA	† **Motorola (1122)**	
	MC14082BC	**Motorola (1122)**	
	CD4082BC	National	180
	CD4082BM	† National	
	CD4082B	† **RCA (704,1145)**	
	CD4082BE	**RCA (704,1145)**	
	HCC4082B	† SGS	
	HCF4082B	SGS	185
	HEF4082B	Signetics	
	883C4082B	† SSS	
	BCL4082B	SSS	
	SCL4082B	SSS	
	TC4082B	**Toshiba (1363)**	190
40HXXX	LR40H021	Sharp	
	TC40H021	**Toshiba (1363)**	
Triple 3-Input			
AC	**54AC11**	† **Fairchild (1011,1013)**	
	74AC11	**Fairchild (1011,1013)**	

(Continued)

† Military Temperature Range (−55° to 125°C)

* Typical Value

Bold face indicates additional data is provided on the page noted.

DIGITAL–CMOS (Cont'd)

Gates, AND (Cont'd)

Function	Device	Source	Line
Triple 3-Input (Cont'd)			
AHCT	**KS74AHCT11**	**Samsung (1153)**	
HC	**GD74HC11**	**Goldstar (1066)**	
	HD74HC11	Hitachi	
	M74HC11	Mitsubishi	
	MC54HC11	**† Motorola (1122)**	5
	MC74HC11	**Motorola (1122)**	
	MM54HC11	† National	
	MM74HC11	National	
	MN74HC11	Panasonic	
	CD54HC11	**† RCA (1149)**	10
	CD74HC11	**RCA (1149)**	
	SP74HC11	SPI	
	M74HC11	SGS	
	LR74HC11	Sharp	
	74HC11	**Signetics (1156)**	15
	SN54HC11	**† TI (714)**	
	SN74HC11	TI	
	TC74HC11	**Toshiba (1363)**	
	US74HC11	Universal	
HCT	**GD74HCT11**	**Goldstar (1066)**	20
	CD54HCT11	**† RCA (1149)**	
	CD74HCT11	**RCA (1149)**	
	KS74HCTLS11	**Samsung (1153)**	
	74HCT11	**Signetics (1156)**	
	US74HCT11	Universal	25
4XXX	F4073BC	Fairchild	
	F4073BM	† Fairchild	
	MC14073BA	**† Motorola (1122)**	
	MC14073BC	**Motorola (1122)**	
	CD4073BC	National	30
	CD4073BM	† National	
	MN4073B	† Panasonic	
	CD4073B	**† RCA (704,1145)**	
	CD4073BE	**RCA (704,1145)**	
	HCC4073B	† SGS	35
	HCF4073B	SGS	
	HEF4073B	Signetics	
	CM4073A	† Solitron	
	CM4073AE	Solitron	
	883C4073B	† SSS	40
	BCL4073B	SSS	
	SCL4073B	SSS	
	TC4073B	**Toshiba (1363)**	
40HXXX	LR40H011	Sharp	
	TC40H011	**Toshiba (1363)**	45
Quad 2-Input	MM74PC08	National	
AC	**54AC08**	**† Fairchild (1011)**	
	74AC08	**Fairchild (1011,1013)**	
AHCT	**KS74AHCT08**	**Samsung (1153)**	
C	MM54C08	† National	50
	MM74C08	National	
HC	54HC08	† Fairchild	
	74HC08	Fairchild	
	GD74HC08	**Goldstar (1066)**	
	HD74HC08	Hitachi	55
	M74HC08	Mitsubishi	
	MC54HC08	**† Motorola (1122)**	
	MC74HC08	**Motorola (1122)**	
	MM54HC08	† National	
	MM74HC08	National	60
	MN74HC08	Panasonic	
	CD54HC08	**† RCA (1149)**	
	CD74HC08	**RCA (1149)**	
	SP74HC08	SPI	
	M74HC08	SGS	65
	LR74HC08	Sharp	
	74HC08	**Signetics (1156)**	
		(Continued)	

Function	Device	Source	Line
Quad 2-Input			
HC (Cont'd)	SS54HC08	† SSS	
	SS74HC08	SSS	
	SN54HC08	**† TI (714)**	70
	SN74HC08	TI	
	SN74HC7001	TI	
	TC74HC08	**Toshiba (1363)**	
	US74HC08	Universal	
HCT	**GD74HCT08**	**Goldstar (1066)**	75
	CD54HCT08	**† RCA (1149)**	
	CD74HCT08	**RCA (1149)**	
	KS74HCTLS08	**Samsung (1153)**	
	74HCT08	**Signetics (1156)**	
	US74HCT08	Universal	80
	ZX54HCT/LS08	† Zytrex	
	ZX74HCT/LS08	Zytrex	
4XXX	F4081BC	Fairchild	
	F4081BM	† Fairchild	
	MC14081BA	**† Motorola (1122)**	85
	MC14081BC	**Motorola (1122)**	
	CD4081BC	National	
	CD4081BM	† National	
	MN4081B	† Panasonic	
	CD4081B	**† RCA (704,1145)**	90
	CD4081BE	**RCA (704,1145)**	
	LC4081B	Sanyo	
	HCC4081B	† SGS	
	HCF4081B	SGS	
	HEF4081B	Signetics	95
	CM4081A	† Solitron	
	CM4081AE	Solitron	
	883C4081B	† SSS	
	BCL4081B	SSS	
	SCL4081B	SSS	100
	TC4081B	**Toshiba (1363)**	
40HXXX	LR40H008	Sharp	
	TC40H008	**Toshiba (1363)**	
Quad 2-Input, Open Collector			
AHCT	**KS74AHCT09**	**Samsung (1153)**	
HC	HD74HC09	Hitachi	105
	SN54HC09	**† TI (714)**	
	SN74HC09	TI	
HCT	**KS74HCTLS09**	**Samsung (1153)**	

Gates, NAND

Function	Device	Source	Line
Dual 2-Input (Driver)			
4XXX	**CD40107B**	**† RCA (704,1145)**	
	CD40107BE	**RCA (704,1145)**	110
	HCC40107B	† SGS	
	HCF40107B	SGS	
	TC40107	**Toshiba (1363)**	
Dual 4-Input			
AC	**54AC20**	**† Fairchild (1011,1013)**	
	74AC20	**Fairchild (1011,1013)**	115
C	MM54C20	† National	
	MM74C20	National	
HC	54HC20	† Fairchild	
	74HC20	Fairchild	
	GD74HC20	**Goldstar (1066)**	120
	HD74HC01	Hitachi	
	HD74HC20	Hitachi	
	M74HC20	Mitsubishi	
	MC54HC20	**† Motorola (1122)**	
	MC74HC20	**Motorola (1122)**	125
	MN74HC20	Panasonic	
	CD54HC20	**† RCA (1149)**	
	CD74HC20	**RCA (1149)**	
	SP74HC20	SPI	
		(Continued)	

Function	Device	Source	Line
Dual 4-Input			
HC (Cont'd)	M74HC20	SGS	130
	LR74HC20	Sharp	
	74HC20	**Signetics (1156)**	
	SN54HC20	**† TI (714)**	
	SN74HC20	TI	
	TC74HC20	**Toshiba (1363)**	135
	US74HC20	Universal	
HCT	**GD74HCT20**	**Goldstar (1066)**	
	CD54HCT20	**† RCA (1149)**	
	CD74HCT20	**RCA (1149)**	
	74HCT20	**Signetics (1156)**	140
	US74HCT20	Universal	
4XXX	F4012BC	Fairchild	
	F4012BM	† Fairchild	
	MC14012BA	**† Motorola (1122)**	
	MC14012BC	**Motorola (1122)**	145
	MC14012UBA	**† Motorola (1122)**	
	MC14012UBC	**Motorola (1122)**	
	CD4012A	National	
	CD4012BC	National	
	CD4012BM	† National	150
	MN4012B	† Panasonic	
	CD4012A	**† RCA (704,1145)**	
	CD4012AE	**RCA (704,1145)**	
	CD4012B	**† RCA (704,1145)**	
	CD4012BE	**RCA (704,1145)**	155
	CD4012UB	**† RCA (704,1145)**	
	CD4012UBE	**RCA (704,1145)**	
	HCC4012B	† SGS	
	HCF4012B	SGS	
	HEF4012B	Signetics	160
	CM4012A	† Solitron	
	CM4012AE	Solitron	
	883C4012B	† SSS	
	BCL4012B	SSS	
	SCL4012B	SSS	165
	TC4012B	**Toshiba (1363)**	
40HXXX	**TC40H020**	**Toshiba (1363)**	
Quad 2-Input (open drain)			
HC	SN74HC01	TI	
Dual 4-Input Expandable			
4XXX	883C4412B	† SSS	
	BCL4412B	SSS	170
	SCL4412B	SSS	
Triple 3-Input			
AC	**54AC10**	**† Fairchild (1011,1013)**	
	74AC10	**Fairchild (1011,1013)**	
AHCT	**KS74AHCT10**	**Samsung (1153)**	
	KS74AHCT12	**Samsung (1153)**	175
C	MM54C10	† National	
	MM74C10	National	
HC	54HC10	† Fairchild	
	74HC10	Fairchild	
	GD74HC10	**Goldstar (1066)**	180
	HD74HC10	Hitachi	
	M74HC10	Mitsubishi	
	MC54HC10	**† Motorola (1122)**	
	MC74HC10	**Motorola (1122)**	
	MM54HC10	† National	185
	MM54HC20	† National	
	MM74HC10	National	
	MM74HC20	National	
	MN74HC10	Panasonic	
	CD54HC10	**† RCA (1149)**	190
	CD74HC10	**RCA (1149)**	
	SP74HC10	SPI	
	M74HC10	SGS	
	LR74HC10	Sharp	
		(Continued)	

† Military Temperature Range (−55° to 125°C)

* Typical Value

Bold face indicates additional data is provided on the page noted.

DIGITAL–CMOS (Cont'd)

Function	Device	Source	Line
Gates, NAND		**(Cont'd)**	
Triple 3-Input			
HC		(Cont'd)	
	74HC10	**Signetics (1156)**	
	SS54HC10	† SSS	
	SS74HC10	SSS	
	SN54HC10	† **TI (714)**	
	SN74HC10	TI	5
	TC74HC10	**Toshiba (1363)**	
	US74HC10	Universal	
HCT	**GD74HCT10**	**Goldstar (1066)**	
	CD54HCT10	† **RCA (1149)**	
	CD74HCT10	**RCA (1149)**	10
	KS74HCTLS10	**Samsung (1153)**	
	KS74HCTLS12	**Samsung (1153)**	
	74HCT10	**Signetics (1156)**	
	SS54HCT10	† SSS	
	SS74HCT10	SSS	15
	US74HCT10	Universal	
4XXX	F4023BC	Fairchild	
	F4023BM	† Fairchild	
	MC14023BA	† **Motorola (1122)**	
	MC14023BC	**Motorola (1122)**	20
	MC14023UBA	† **Motorola (1122)**	
	MC14023UBC	**Motorola (1122)**	
	CD4023BC	National	
	CD4023BM	† National	
	MN4023B	† Panasonic	25
	CD4023A	† **RCA (704,1145)**	
	CD4023AE	**RCA (704,1145)**	
	CD4023B	† **RCA (704,1145)**	
	CD4023BE	**RCA (704,1145)**	
	CD4023UB	† **RCA (704,1145)**	30
	CD4023UBE	**RCA (704,1145)**	
	HCC4023B	† SGS	
	HCF4023B	SGS	
	HEF4023B	Signetics	
	CM4023A	† Solitron	35
	CM4023AE	Solitron	
	883C4023B	† SSS	
	BCL4023B	SSS	
	SCL4023B	SSS	
	TC4023B	**Toshiba (1363)**	40
40HXXX	LR40H010	Sharp	
	TC40H010	**Toshiba (1363)**	
Quad 2-Input	MM74PC00	National	
AC	**54AC00**	† **Fairchild (1011,1013)**	
	74AC00	**Fairchild (1011,1013)**	45
AHCT	**KS74AHCT00**	**Samsung (1153)**	
C	MM54C00	† National	
	MM74C00	National	
HC	54HC00	† Fairchild	
	74HC00	Fairchild	50
	GD74HC00	**Goldstar (1066)**	
	HD74HC00	Hitachi	
	M74HC00	Mitsubishi	
	MC54HC00	† **Motorola (1122)**	
	MC74HC00	**Motorola (1122)**	55
	MM54HC00	† National	
	MM74HC00	National	
	CD54HC00	† **RCA (1149)**	
	CD74HC00	**RCA (1149)**	
	SP74HC00	SPI	60
	M74HC00	SGS	
	LR74HC00	Sharp	
	74HC00	**Signetics (1156)**	
	SS54HC00	† SSS	
	SS74HC00	† SSS	65
	SS75HC00	SSS	
		(Continued)	

Function	Device	Source	Line
Quad 2-Input			
HC		(Cont'd)	
	SN54HC00	† **TI (714)**	
	SN74HC00	TI	
	TC74HC00	**Toshiba (1363)**	
	US74HC00	Universal	70
HCT	**GD74HCT00**	**Goldstar (1066)**	
	MC54HCT00	† Motorola	
	MC74HCT00	Motorola	
	MM54HCT00	† National	
	MM74HCT00	National	75
	CD54HCT00	† **RCA (1149)**	
	CD74HCT00	**RCA (1149)**	
	KS74HCTLS00	**Samsung (1153)**	
	74HCT00	**Signetics (1156)**	
	SS74HCT00	SSS	80
	US74HCT00	Universal	
	ZX54HCT/LS00	† Zytrex	
	ZX74HCT/LS00	Zytrex	
4XXX	F4011BC	Fairchild	
	F4011BM	† Fairchild	85
	MC14011BA	† **Motorola (1122)**	
	MC14011BC	**Motorola (1122)**	
	MC14011UBA	† **Motorola (1122)**	
	MC14011UBC	**Motorola (1122)**	
	CD4011AC	National	90
	CD4011AM	† National	
	CD4011BC	National	
	CD4011BM	† National	
	MN4011B	† Panasonic	
	CD4011A	**RCA (704,1145)**	95
	CD4011AE	**RCA (704,1145)**	
	CD4011B	† **RCA (704,1145)**	
	CD4011BE	**RCA (704,1145)**	
	CD4011UB	† **RCA (704,1145)**	
	CD4011UBE	**RCA (704,1145)**	100
	LC4011B	Sanyo	
	HCC4011B	† SGS	
	HCF4011B	SGS	
	HEF4011B	Signetics	
	HEF4011UB	Signetics	105
	CM4011A	† Solitron	
	CM4011AE	Solitron	
	CM4011B	† Solitron	
	CM4011BE	Solitron	
	883C4011B	† SSS	110
	883C4011UB	† SSS	
	BCL4011B	SSS	
	BCL4011UB	SSS	
	SCL4011B	SSS	
	SCL4011UB	SSS	115
	TC4011B	**Toshiba (1363)**	
	TC4011UB	**Toshiba (1363)**	
40HXXX	LR40H000	Sharp	
	TC40H000	**Toshiba (1363)**	
Quad 2-Input, Open Collector			
HC	**CD54HC03**	† **RCA (1149)**	120
	CD74HC03	**RCA (1149)**	
	74HC03	**Signetics (1156)**	
	US74HC03	Universal	
HCT	**CD54HCT03**	† **RCA (1149)**	
	CD74HCT03	**RCA (1149)**	125
	74HCT03	**Signetics (1156)**	
Quad 2-Input (open drain)			
AHCT	**KS74AHCT03**	**Samsung (1153)**	
HC	M74HC03	Mitsubishi	
	MC54HC03	† **Motorola (1122)**	
	MC74HC03	**Motorola (1122)**	130
	MM54HC03	† National	
	MM74HC03	National	
	M74HC03	SGS	
	SN54HC03	† **TI (714)**	
		(Continued)	

Function	Device	Source	Line
Quad 2-Input (open drain)			
HC		(Cont'd)	
	SN74HC03	TI	135
	SN74HC7003	TI	
	TC74HC03	**Toshiba (1363)**	
HCT	MC54HCT03	† Motorola	
	MC74HCT03	Motorola	
	KS74HCTLS01	**Samsung (1153)**	140
	KS74HCTLS03	**Samsung (1153)**	
	US74HCT03	Universal	
5XXX	TC5029B	Toshiba	
8-Input			
C	MM54C30	† National	
	MM74C30	National	145
HC	54HC30	† Fairchild	
	74HC30	Fairchild	
	GD74HC30	**Goldstar (1066)**	
	HD74HC30	Hitachi	
	M74HC30	Mitsubishi	150
	MC54HC30	† **Motorola (1122)**	
	MC74HC30	**Motorola (1122)**	
	MM54HC30	† National	
	MM74HC30	National	
	MN74HC30	Panasonic	155
	CD54HC30	† **RCA (1149)**	
	CD74HC30	**RCA (1149)**	
	SP74HC30	SPI	
	M74HC30	SGS	
	LR74HC30	Sharp	160
	74HC30	**Signetics (1156)**	
	SN54HC30	† **TI (714)**	
	SN74HC30	TI	
	TC74HC30	**Toshiba (1363)**	
	US74HC30	Universal	165
HCT	**GD74HCT30**	**Goldstar (1066)**	
	CD54HCT30	† **RCA (1149)**	
	CD74HCT30	**RCA (1149)**	
	74HCT30	**Signetics (1156)**	
	US74HCT30	Universal	170
4XXX	F4068BC	Fairchild	
	F4068BM	† Fairchild	
	MC14068BA	† **Motorola (1122)**	
	MC14068BC	**Motorola (1122)**	
	CD4068B	† **RCA (1145)**	175
	CD4068BE	**RCA (1145)**	
	HCC4068B	† SGS	
	HCF4068B	SGS	
	HEF4068B	Signetics	
	CM4068A	† Solitron	180
	CM4068AE	Solitron	
	883C4068B	† SSS	
	BCL4068B	SSS	
	SCL4068B	SSS	
	TC4068B	**Toshiba (1363)**	185
13-Input			
HC	54HC133	† Fairchild	
	74HC133	Fairchild	
	HD74HC133	Hitachi	
	M74HC133	Mitsubishi	
	MC54HC133	† **Motorola (1122)**	190
	MC74HC133	**Motorola (1122)**	
	MM54HC133	† National	
	MM74HC133	National	
	MN74HC133	Panasonic	
	SP74HC133	SPI	195
	M74HC133	SGS	
	SN54HC133	† **TI (714)**	
	SN74HC133	TI	
	TC74HC133	**Toshiba (1363)**	
HCT	US74HCT133	Universal	200

† Military Temperature Range (−55° to 125°C)

* Typical Value

Bold face indicates additional data is provided on the page noted.

DIGITAL-CMOS (Cont'd)

Gates, AND-OR

Function	Device	Source	Line
Triple Bi-Phase Pairs			
4XXX	**CD4037A**	† **RCA (1145)**	
	CD4037AE	**RCA (1145)**	
	CM4037A	† Solitron	
	CM4037AE	Solitron	
Quad Select			
4XXX	F4019BC	Fairchild	5
	F4019BM	† Fairchild	
	CD4019BC	National	
	CD4019BM	† National	
	CD4019A	† **RCA (704,1145,1147)**	
	CD4019AE	**RCA (704,1145,1147)**	10
	CD4019B	† **RCA (704,1145,1147)**	
	CD4019BE	**RCA (704,1145,1147)**	
	HCC4019B	† SGS	
	HCF4019B	SGS	
	HEF4019B	Signetics	15
	CM4019A	† Solitron	
	CM4019AE	Solitron	
	883C4019B	† SSS	
	BCL4019B	SSS	
	SCL4019B	SSS	20
	TC4019B	**Toshiba (1363)**	
2-Wide, 2-Input/2-Wide, 3-Input			
HC	MC54HC58	† Motorola	
	MC74HC58	Motorola	
	MM54HC58	† National	
	MM74HC58	National	25
	US74HC58	Universal	
HCT	US74HCT58	Universal	

Gates, AND-OR-Invert

Function	Device	Source	Line
Dual 2-Wide 2-Input			
4XXX	F4085BC	Fairchild	
	F4085BM	Fairchild	
	MC14506BA	† Motorola	30
	MC14506BC	Motorola	
	MN4085B	† Panasonic	
	CD4085B	† **RCA (704,1145)**	
	CD4085BE	**RCA (704,1145)**	
	HCC4085B	† SGS	35
	HCF4085B	SGS	
	HEF4085B	Signetics	
	883C4085B	† SSS	
	BCL4085B	SSS	
	SCL4085B	SSS	40
	TC4085B	**Toshiba (1363)**	
40HXXX	LR40H051	Sharp	
	TC40H051	**Toshiba (1363)**	
2-Wide, 2-Input/2-Wide, 3-Input			
AHCT	**KS74AHCT51**	**Samsung (1153)**	
HC	**GD74HC51**	**Goldstar (1066)**	45
	HD74HC51	Hitachi	
	M74HC51	Mitsubishi	
	MC54HC51	† Motorola	
	MC74HC51	Motorola	
	MM54HC51	† National	50
	MM74HC51	National	
	MN74HC51	Panasonic	
	M74HC51	SGS	
	SN54HC51	† **TI (714)**	
	SN74HC51	TI	55
	TC74HC51	**Toshiba (1363)**	
HCT	US74HCT51	Universal	
4-Wide 2-Input Expandable			
4XXX	F4086BC	Fairchild	
	F4086BM	† Fairchild	
	CD4086B	† **RCA (704,1145)**	60
	CD4086BE	**RCA (704,1145)**	
	HCC4086B	† SGS	
	HCF4086B	SGS	
	HEF4086B	Signetics	
	883C4086B	† SSS	65
	BCL4086B	SSS	
	SCL4086B	SSS	
	TC4086B	**Toshiba (1363)**	

Gates, OR

Function	Device	Source	Line
Dual 4-Input			
HC	**TC74HC4072**	**Toshiba (1363)**	
4XXX	F4072BC	Fairchild	70
	F4072BM	† Fairchild	
	MC14072BA	† **Motorola (1122)**	
	MC14072BC	**Motorola (1122)**	
	CD4072BC	National	
	CD4072BM	† National	75
	MN4072B	† Panasonic	
	CD4072B	† **RCA (704,1145)**	
	CD4072BE	**RCA (704,1145)**	
	HCC4072B	† SGS	
	HCF4072B	SGS	80
	HEF4072B	Signetics	
	883C4072B	† SSS	
	BCL4072B	SSS	
	SCL4072B	SSS	
	TC4072B	**Toshiba (1363)**	85
Triple 3-Input			
HC	**MC54HC4075**	† **Motorola (1122)**	
	MC74HC4075	**Motorola (1122)**	
	MM54HC266	† National	
	MM54HC4075	† National	
	MM74HC266	National	90
	MM74HC4075	National	
	MN74HC4075	Panasonic	
	CD54HC4075	† **RCA (1149)**	
	CD74HC4075	**RCA (1149)**	
	SP74HC4075	† SPI	95
	M74HC4075	SGS	
	LR74HC4075	Sharp	
	74HC4075	**Signetics (1161)**	
	SN54HC4075	† **TI (714)**	
	SN74HC4075	TI	100
	TC74HC4075	**Toshiba (1363)**	
	US74HC4075	Universal	
HCT	**CD54HCT4075**	† **RCA (1149)**	
	CD74HCT4075	**RCA (1149)**	
	74HCT4075	**Signetics (1161)**	105
	US74HCT4075	Universal	
4XXX	F4075BC	Fairchild	
	F4075BM	† Fairchild	
	MC14075BA	† **Motorola (1122)**	
	MC14075BC	**Motorola (1122)**	110
	CD4075BC	National	
	CD4075BM	† National	
	MN4075B	† Panasonic	
	CD4075B	† **RCA (704,1145)**	
	CD4075BE	**RCA (704,1145)**	115
	HCC4075B	† SGS	
	HCF4075B	SGS	
	HEF4075B	Signetics	
	883C4075B	† SSS	
	BCL4075B	SSS	120
	SCL4075B	SSS	
	TC4075B	**Toshiba (1363)**	
Quad 2-Input			
AC	**54AC32**	† **Fairchild (1011,1013)**	
	74AC32	**Fairchild (1011,1013)**	
AHCT	**KS74AHCT32**	**Samsung (1153)**	125
C	MM54C32	† National	
	MM74C32	National	
HC	54HC32	† Fairchild	
	74HC32	Fairchild	
	GD74HC32	**Goldstar (1066)**	130
	HD74HC32	Hitachi	
	M74HC32	Mitsubishi	
	MC54HC32	† **Motorola (1122)**	
	MC74HC32	**Motorola (1122)**	
	MM54HC32	† National	135
	MM74HC32	National	
	MN74HC32	Panasonic	
	CD54HC32	† **RCA (1149)**	
	CD74HC32	**RCA (1149)**	
	SP74HC32	SPI	140
	M74HC32	SGS	
	LR74HC32	Sharp	
	74HC32	**Signetics (1156)**	
	SN54HC32	† **TI (714)**	
	SN74HC32	TI	145
	SN74HC7032	TI	
	TC74HC32	**Toshiba (1363)**	
	US74HC32	Universal	
HCT	**GD74HCT32**	**Goldstar (1066)**	
	CD54HCT32	† **RCA (1149)**	150
	CD74HCT32	**RCA (1149)**	
	74HCT32	**Signetics (1156)**	
	US74HCT32	Universal	
	ZX54HCT/LS32	† Zytrex	
	ZX74HCT/LS32	Zytrex	155
4XXX	F4071BC	Fairchild	
	F4071BM	† Fairchild	
	MC14071BA	† **Motorola (1122)**	
	MC14071BC	**Motorola (1122)**	
	CD4071BC	National	160
	CD4071BM	† National	
	MN4071B	† Panasonic	
	CD4071B	† **RCA (704,1145)**	
	CD4071BE	**RCA (704,1145)**	
	LC4071B	Sanyo	165
	HCC4071B	† SGS	
	HCF4071B	SGS	
	HEF4071B	Signetics	
	CM4071A	† Solitron	
	CM4071AE	Solitron	170
	883C4071B	† SSS	
	BCL4071B	SSS	
	SCL4071B	SSS	
	TC4071B	**Toshiba (1363)**	
40HXXX	LR40H032	Sharp	175
	TC40H032	**Toshiba (1363)**	

Gates, NOR

Function	Device	Source	Line
Dual 3-Input plus Inverter			
4XXX	**MC14000UBA**	† **Motorola (1123)**	
	MC14000UBC	**Motorola (1123)**	
	CD4000C	National	
	CD4000M	† National	180
	CD4000A	† **RCA (704,1145)**	
	CD4000AE	**RCA (704,1145)**	
	CD4000B	**RCA (704,1145)**	
	CD4000BE	**RCA (704,1145)**	
	CD4000UB	† **RCA (704,1145)**	185
	CD4000UBE	**RCA (704,1145)**	
	HCC4000B	† SGS	

(Continued)

† Military Temperature Range (−55° to 125°C)

* Typical Value

Bold face indicates additional data is provided on the page noted.

DIGITAL–CMOS (Cont'd)

Gates, NOR (Cont'd)

Function	Device	Source	Line
Dual 3-Input plus Inverter			
4XXX		(Cont'd)	
	HCF4000B	SGS	
	HEF4000B	Signetics	
	CM4000A	Solitron	
	CM4000AE	Solitron	
	883C4000B	† SSS	5
	BCL4000B	SSS	
	SCL4000B	SSS	
	TC4000B	**Toshiba (1363)**	
Dual 4-Input			
HC	M74HC4002	Mitsubishi	
	MC54HC4002	† **Motorola (1123)**	10
	MC74HC4002	**Motorola (1123)**	
	MM54HC4002	† National	
	MM74HC4002	National	
	MN74HC4002	Panasonic	
	CD54HC4002	† **RCA (1149)**	15
	CD74HC4002	**RCA (1149)**	
	SP74HC4002	SPI	
	M74HC4002	SGS	
	LR74HC4002	Sharp	
	74HC4002	**Signetics (1160)**	20
	74HC58	**Signetics (1156)**	
	SN54HC4002	† **TI (714)**	
	SN74HC4002	TI	
	TC74HC4002	**Toshiba (1363)**	
	US74HC4002	Universal	25
HCT	**CD54HCT4002**	† **RCA (1149)**	
	CD74HCT4002	**RCA (1149)**	
	54HCT4002	† Signetics	
	74HCT4002	**Signetics (1160)**	
	74HCT58	**Signetics (1156)**	30
	US74HCT4002	Universal	
4XXX	F4002BC	Fairchild	
	F4002BM	† Fairchild	
	MC14002BA	† **Motorola (1123)**	
	MC14002BC	**Motorola (1123)**	35
	MC14002UBA	† **Motorola (1123)**	
	MC14002UBC	**Motorola (1123)**	
	CD4002A	National	
	CD4002BC	National	
	CD4002BM	† National	40
	MN4002B	† Panasonic	
	CD4002A	† **RCA (704,1145)**	
	CD4002AE	**RCA (704,1145)**	
	CD4002B	† **RCA (704,1145)**	
	CD4002BE	**RCA (704,1145)**	45
	CD4002UB	† **RCA (704,1145)**	
	CD4002UBE	**RCA (704,1145)**	
	HCC4002B	† SGS	
	HCF4002B	SGS	
	HEF4002B	Signetics	50
	CM4002A	† Solitron	
	CM4002AE	Solitron	
	883C4002B	† SSS	
	BCL4002B	SSS	
	SCL4002B	SSS	55
	TC4002B	**Toshiba (1363)**	
Triple 3-Input			
HC	54HC27	† Fairchild	
	74HC27	Fairchild	
	GD74HC27	**Goldstar (1066)**	
	HD74HC27	Hitachi	60
	M74HC27	Mitsubishi	
	MC54HC27	† **Motorola (1122)**	
	MC74HC27	**Motorola (1122)**	
	MM54HC27	† National	
	MM74HC27	National	65
	MN74HC27	Panasonic	
	CD54HC27	† **RCA (1149)**	
		(Continued)	

Function	Device	Source	Line
Triple 3-Input			
HC		(Cont'd)	
	CD74HC27	**RCA (1149)**	
	SP74HC27	SPI	
	M74HC27	SGS	70
	LR74HC27	Sharp	
	74HC27	**Signetics (1156)**	
	SS54HC27	† SSS	
	SS74HC27	SSS	
	SN54HC27	† **TI (714)**	75
	SN74HC27	TI	
	TC74HC27	**Toshiba (1363)**	
HCT	**GD74HCT27**	**Goldstar (1066)**	
	CD54HCT27	† **RCA (1149)**	
	CD74HCT27	**RCA (1149)**	80
	74HCT27	**Signetics (1156)**	
	SS54HCT27	† SSS	
	SS74HCT27	SSS	
	US74HCT27	Universal	
4XXX	F4025BC	Fairchild	85
	F4025BM	† Fairchild	
	MC14025BA	† **Motorola (1122)**	
	MC14025BC	**Motorola (1122)**	
	MC14025UBA	† **Motorola (1122)**	
	MC14025UBC	**Motorola (1122)**	90
	CD4025A	National	
	CD4025BC	National	
	CD4025BM	† National	
	MN4025B	† Panasonic	
	CD4025A	† **RCA (704,1145)**	95
	CD4025AE	**RCA (704,1145)**	
	CD4025B	† **RCA (704,1145)**	
	CD4025BE	**RCA (704,1145)**	
	CD4025UB	† **RCA (704,1145)**	
	CD4025UBE	**RCA (704,1145)**	100
	HCC4025B	† SGS	
	HCF4025B	SGS	
	HEF4025B	Signetics	
	CM4025A	Solitron	
	CM4025AE	Solitron	105
	883C4025B	† SSS	
	BCL4025B	SSS	
	SCL4025B	SSS	
	TC4025B	**Toshiba (1363)**	
40HXXX	LR40H027	Sharp	110
	TC40H027	**Toshiba (1363)**	
Quad 2-Input	MM74PC02	National	
AC	**54AC02**	† **Fairchild (1011,1013)**	
	74AC02	**Fairchild (1011,1013)**	
AHCT	**KS74AHCT02**	**Samsung (1153)**	115
C	MM54C02	† National	
	MM74C02	National	
HC	54HC02	† Fairchild	
	74HC02	Fairchild	
	GD74HC02	**Goldstar (1066)**	120
	HD74HC02	Hitachi	
	M74HC02	Mitsubishi	
	MC54HC02	† **Motorola (1122)**	
	MC54HC36	† Motorola	
	MC74HC02	**Motorola (1122)**	125
	MC74HC36	Motorola	
	MM54HC02	† National	
	MM74HC02	National	
	MN74HC02	Panasonic	
	CD54HC02	† **RCA (1149)**	130
	CD74HC02	**RCA (1149)**	
	SP74HC02	SPI	
	M74HC02	SGS	
	LR74HC02	Sharp	
	74HC02	**Signetics (1156)**	135
		(Continued)	

Function	Device	Source	Line
Quad 2-Input			
HC		(Cont'd)	
	SS54HC02	† SSS	
	SS74HC02	SSS	
	SN54HC02	† **TI (714)**	
	SN54HC36	† **TI (714)**	
	SN74HC02	TI	140
	SN74HC36	TI	
	SN74HC7002	TI	
	TC74HC02	**Toshiba (1363)**	
	US74HC02	Universal	
HCT	**GD74HCT02**	**Goldstar (1066)**	145
	CD54HCT02	† **RCA (1149)**	
	CD74HCT02	**RCA (1149)**	
	KS74HCTLS02	**Samsung (1153)**	
	74HCT02	**Signetics (1156)**	
	SS54HCT02	† SSS	150
	SS74HCT02	SSS	
	US74HCT02	Universal	
	ZX54HCT/LS02	† Zytrex	
	ZX74HCT/LS02	Zytrex	
4XXX	F4001BC	Fairchild	155
	F4001BM	† Fairchild	
	MC14001BA	† **Motorola (1122)**	
	MC14001BC	**Motorola (1122)**	
	MC14001UBA	† **Motorola (1122)**	
	MC14001UBC	**Motorola (1122)**	160
	CD4001A	National	
	CD4001BC	National	
	CD4001BM	† National	
	MN4001B	† Panasonic	
	CD4001A	† **RCA (704,1145)**	165
	CD4001AE	**RCA (704,1145)**	
	CD4001B	† **RCA (704,1145)**	
	CD4001BE	**RCA (704,1145)**	
	CD4001UB	† **RCA (704,1145)**	
	CD4001UBE	**RCA (704,1145)**	170
	LC4001B	Sanyo	
	HCC4001B	† SGS	
	HCF4001B	SGS	
	HEF4001B	Signetics	
	HEF4001UB	Signetics	175
	CM4001A	† Solitron	
	CM4001AE	Solitron	
	CM4001B	† Solitron	
	CM4001BE	Solitron	
	883C4001B	† SSS	180
	883C4001UB	† SSS	
	BCL4001B	SSS	
	BCL4001UB	SSS	
	SCL4001B	SSS	
	SCL4001UB	SSS	185
	TC4001B	**Toshiba (1363)**	
	TC4001UB	**Toshiba (1363)**	
40HXXX	LR50H002	Sharp	
	TC40H002	**Toshiba (1363)**	
8-Input			
HC	**MC54HC4078**	† **Motorola (1123)**	190
	MC74HC4078	**Motorola (1123)**	
	MM54HC4018	† National	
	MM54HC4078	† National	
	MM74HC4018	National	
	MM74HC4078	National	195
	MN74HC4078	Panasonic	
	SP74HC4078	† SPI	
	M74HC4078	SGS	
	LR74HC4078	Sharp	
	SN54HC4078A	† **TI (714)**	200
	SN74HC4078A	TI	
	TC74HC4078	**Toshiba (1363)**	
		(Continued)	

† Military Temperature Range (−55° to 125°C)

* Typical Value

Bold face indicates additional data is provided on the page noted.

DIGITAL–CMOS (Cont'd)

Gates, NOR (Cont'd)

Function	Device	Source	Line
8-Input (Cont'd)			
4XXX	F4078BC	Fairchild	
	F4078BM	† Fairchild	
	MC14078BA	**† Motorola (1123)**	
	MC14078BC	**Motorola (1123)**	
	MN4078B	† Panasonic	5
	CD4078B	**† RCA (1145)**	
	CD4078BE	**RCA (1145)**	
	HCC4078B	† SGS	
	HCF4078B	SGS	
	HEF4078B	Signetics	10
	883/4402B	† Solitron	
	CM4078A	† Solitron	
	CM4078AE	Solitron	
	SCL4402B	Solitron	
	883C4078B	† SSS	15
	BCL4078B	SSS	
	SCL4078B	SSS	
	TC4078B	**Toshiba (1363)**	

Gates, Exclusive OR

Function	Device	Source	Line
Quad			
AC	**54AC86**	**† Fairchild (1011,1013)**	
	74AC86	**Fairchild (1011,1013)**	20
AHCT	**KS74AHCT86**	**Samsung (1153)**	
C	MM54C86	† National	
	MM74C86	National	
HC	54HC86	† Fairchild	
	74HC86	Fairchild	25
	GD74HC86	**Goldstar (1066)**	
	HD74HC386	Hitachi	
	HD74HC86	Hitachi	
	M74HC86	Mitsubishi	
	MC54HC386	† Motorola	30
	MC54HC86	**† Motorola (1123)**	
	MC74HC386	† Motorola	
	MC74HC86	**Motorola (1123)**	
	MM54HC86	† National	
	MM74HC86	National	35
	MN74HC86	Panasonic	
	CD54HC86	**† RCA (1149)**	
	CD74HC86	**RCA (1149)**	
	SP74HC86	SPI	
	M74HC86	SGS	40
	LR74HC86	Sharp	
	74HC86	**Signetics (1156)**	
	SN54HC386	**† TI (714)**	
	SN54HC86	**† TI (714)**	
	SN74HC386	TI	45
	SN74HC86	TI	
	TC74HC386	**Toshiba (1363)**	
	TC74HC86	**Toshiba (1363)**	
	US74HC86	Universal	
HCT	**GD74HCT86**	**Goldstar (1066)**	50
	CD54HCT86	**† RCA (1149)**	
	CD74HCT86	**RCA (1149)**	
	KS74HCTLS86	**Samsung (1153)**	
	74HCT86	**Signetics (1156)**	
	US74HCT86	Universal	55
4XXX	F4030BC	Fairchild	
	F4030BM	† Fairchild	
	F4070BC	Fairchild	
	F4070BM	† Fairchild	
	MC14070BA	**† Motorola (1123)**	60
	MC14070BC	**Motorola (1123)**	
	CD4030A	National	
	CD4070BC	National	
	CD4070BM	† National	

(Continued)

Function	Device	Source	Line
Quad			
4XXX (Cont'd)			
	CD4507BC	National	65
	CD4507BM	† National	
	MN4030B	† Panasonic	
	MN4070B	† Panasonic	
	CD4030A	**† RCA (704,1145,1147)**	
	CD4030AE	**RCA (704,1145,1147)**	70
	CD4030B	**† RCA (704,1145,1147)**	
	CD4030BE	**RCA (704,1145,1147)**	
	CD4070B	**† RCA (704,1145,1147)**	
	CD4070BE	**RCA (704,1145,1147)**	
	HCC4030B	† SGS	75
	HCC4070B	† SGS	
	HCF4030B	SGS	
	HCF4070B	SGS	
	HEF4030B	Signetics	
	HEF4070B	Signetics	80
	CM4030A	† Solitron	
	CM4030AE	Solitron	
	CM4070A	† Solitron	
	CM4070AE	Solitron	
	883C4030B	† SSS	85
	883C4070B	† SSS	
	BCL4030B	SSS	
	BCL4070B	SSS	
	SCL4030B	SSS	
	SCL4070B	SSS	90
	TC4030B	**Toshiba (1363)**	
40HXXX	**TC40H386**	**Toshiba (1363)**	

Gates, Exclusive NOR

Function	Device	Source	Line
Quad			
AHCT	**KS74AHCT266**	**Samsung (1153)**	
HC	HD74HC266	Hitachi	
	M74HC266	Mitsubishi	95
	MC54HC266	**† Motorola (1123)**	
	MC74HC266	**Motorola (1123)**	
	MN74HC266	Panasonic	
	CD54HC266	† RCA	
	CD54HC7266	† RCA	100
	CD74HC266	RCA	
	CD74HC7266	**RCA (1149)**	
	SP74HC266	SPI	
	M74HC266	SGS	
	LR74HC266	Sharp	105
	74HC266	**Signetics (1158)**	
	SN54HC266	**† TI (714)**	
	SN74HC266	TI	
	SN74HC7266	TI	
	TC74HC266	Toshiba	110
	US74HC266	Universal	
HCT	CD54HCT7266	† RCA	
	CD74HCT7266	RCA	
	KS74HCTLS266	**Samsung (1153)**	
	US74HCT266	Universal	115
4XXX	F4077BC	Fairchild	
	F4077BM	† Fairchild	
	MC14077BA	**† Motorola (1123)**	
	MC14077BC	**Motorola (1123)**	
	CD4077B	**† RCA (704,1145,1147)**	120
	CD4077BE	**RCA (704,1145,1147)**	
	HCC4077B	† SGS	
	HCF4077B	SGS	

(Continued)

Function	Device	Source	Line
Quad			
4XXX (Cont'd)			
	HEF4077B	Signetics	
	CM4077A	† Solitron	125
	CM4077AE	Solitron	
	883C4077B	† SSS	
	BCL4077B	SSS	
	SCL4077B	SSS	

Gates, Miscellaneous

Function	Device	Source	Line
Dual 5-Input Majority Logic			
4XXX	**MC14530BA**	**† Motorola (1124)**	130
	MC14530BC	**Motorola (1124)**	
	TC4530B	**Toshiba (1363)**	
Triple (dual 4-input NAND and 2-input OR/NOR)			
4XXX	**MC14501UBA**	**† Motorola (1124)**	
	MC14501UBC	**Motorola (1124)**	
	TC4501B	**Toshiba (1363)**	135
Hex Function (quad inverter plus 2-input NOR gate plus 2-input NAND gate)			
4XXX	**MC14572A**	**† Motorola (1124)**	
	MC14572C	**Motorola (1124)**	
	TC4572B	**Toshiba (1363)**	
8-Input Expandable Multifunction			
4XXX	CD4048BC	National	
	CD4048BM	† National	140
	CD4048A	**† RCA (704,1145)**	
	CD4048AE	**RCA (704,1145)**	
	CD4048B	**† RCA (704,1145)**	
	CD4048BE	**RCA (704,1145)**	
	HCC4048B	† SGS	145
	HCF4048B	SGS	
	CM4048A	† Solitron	
	CM4048AE	Solitron	
	883C4402B	† SSS	
	BCL4402B	SSS	150
	SCL4402B	SSS	

Latches

Function	Device	Source	Line
Dual 4-Bit D-Type, Three State			
HC	MC54HC7873	† Motorola	
	MC74HC7873	Motorola	
Dual 4-Bit D-Type, Three-State			
HC	MC54HC873	† Motorola	
	MC74HC873	Motorola	155
Dual 4-Bit with Clear			
	US74HC116	Universal	
	US74HCT116	Universal	
HCT	74HCT116	MicroTech	
Octal Transparent, D-Type, Three State with Clear			
HC	MC54HC9373	† Motorola	
	MC74HC9373	Motorola	160
Octal Transparent, D-Type with Clear			
HC	MC54HC7373	† Motorola	
	MC54HC7533	† Motorola	
	MC54HC7563	† Motorola	
	MC54HC7573	Motorola	
	MC54HC9533	† Motorola	165
	MC54HC9563	† Motorola	
	MC54HC9573	Motorola	
	MC74HC7373	Motorola	
	MC74HC7533	Motorola	
	MC74HC7563	Motorola	170
	MC74HC7573	Motorola	
	MC74HC9533	Motorola	
	MC74HC9563	Motorola	
	MC74HC9573	Motorola	

† Military Temperature Range (−55° to 125°C)

* Typical Value

Bold face indicates additional data is provided on the page noted.

DIGITAL–CMOS (Cont'd)

Function	Device	Source	Line
Latches (Cont'd)			
Dual 4-Bit			
HC	HD74HC77	Hitachi	
	SN54HC77	† **TI (714)**	
	SN74HC77	TI	
	TC74HC77	**Toshiba (1363)**	
4XXX	**MC14508BA**	† **Motorola (1126)**	5
	MC14508BC	**Motorola (1126)**	
	CD4508B	† **RCA (704,1146)**	
	CD4508BE	**RCA (704,1146)**	
	HCC4508B	† SGS	
	HCF4058B	SGS	10
	HEF4508B	Signetics	
	CM4508	Solitron	
	883C4508B	† SSS	
	BCL4508B	SSS	
	SCL4508B	SSS	15
	TC4508B	**Toshiba (1363)**	
Dual 4-Bit Addressable			
	F4723BC	Fairchild	
4XXX	F4723BM	† Fairchild	
	CD4723BC	National	
	CD4723BM	National	20
Dual 4-Bit D-Type			
ACT	**V54ACT880**	† **VTC (1367,1372)**	
	V74ACT880	**VTC (1367,1372)**	
Quad, Bistable			
HC	HD74HC375	Hitachi	
	M74HC375	Mitsubishi	
	MC74HC77	Motorola	25
	SP74HC77	SPI	
	M74HC77	SGS	
	SN74HC375	TI	
	TC74HC375	**Toshiba (1363)**	
HCT	74HCTR375	MicroTech	30
	US74HCT375	Universal	
40HXXX	LR40H375	Sharp	
	TC40H375	**Toshiba (1363)**	
Quad Clocked D			
4XXX	F4042BC	Fairchild	
	F4042BM	† Fairchild	35
	MC14042BA	† **Motorola (1126)**	
	MC14042BC	**Motorola (1126)**	
	CD4042BC	National	
	CD4042BM	† National	
	CD4042A	† **RCA (1146)**	40
	CD4042AE	**RCA (1146)**	
	CD4042B	† **RCA (1146)**	
	CD4042BE	**RCA (1146)**	
	HCC4042B	† SGS	
	HCF4042B	SGS	45
	HEF4042B	Signetics	
	CM4042A	† Solitron	
	CM4042AE	Solitron	
	883C4042B	† SSS	
	BCL4042B	SSS	50
	SCL4042B	SSS	
	TC4042B	**Toshiba (1363)**	
Quad NAND R/S			
4XXX	F4044BC	Fairchild	
	F4044BM	† Fairchild	
	MC14044BA	† **Motorola (1126)**	55
	MC14044BC	**Motorola (1126)**	
	CD4044A	National	
	CD4044BC	National	
	CD4044BM	† National	
	CD4044A	† **RCA (1146)**	60
	CD4044AE	**RCA (1146)**	
	CD4044B	**RCA (1146)**	
	HCC4044B	† SGS	
	HCF4044B	SGS	
		(Continued)	
Quad NAND R/S			
4XXX		(Cont'd)	
	HEF4044B	Signetics	65
	CM4044A	† Solitron	
	BCL4044B	SSS	
	SCL4044B	SSS	
	TC4044B	**Toshiba (1363)**	
Quad NOR R/S			
4XXX	F4043BC	Fairchild	70
	F4043BM	† Fairchild	
	MC14043BA	† **Motorola (1126)**	
	MC14043BC	**Motorola (1126)**	
	CD4043A	National	
	CD4043BC	National	75
	CD4043BM	† National	
	CD4043A	† **RCA (704,1146)**	
	CD4043AE	**RCA (704,1146)**	
	CD4043B	† **RCA (704,1146)**	
	CD4043BE	**RCA (704,1146)**	80
	HCC4043B	† SGS	
	HCF4043B	SGS	
	HEF4043B	Signetics	
	CM4043A	† Solitron	
	CM4043AE	Solitron	85
	883C4043B	† SSS	
	BCL4043B	SSS	
	SCL4043B	SSS	
	TC4043B	**Toshiba (1363)**	
Quad Set-Reset			
HC	**TC74HC279**	**Toshiba (1363)**	90
Octal, Inverting, Back-to-Back Configuration			
ACT	54ACT547	† MMI	
	54ACT567	† MMI	
	54ACT793	† MMI	
	74ACT547	MMI	
	74ACT567	MMI	95
	74ACT793	MMI	
Octal Transparent, D-Type with Readback, Three-State			
HC	MC54HC7793	Motorola	
	MC74HC7793	Motorola	
Octal Transparent, D-Type, Three State			
AC	**54AC373**	† **Fairchild (1012,1013)**	
	54AC573	† **Fairchild (1012,1013)**	100
	74AC373	**Fairchild (1012,1013)**	
	74AC573	**Fairchild (1012,1013)**	
ACT	**54ACT373**	† **Fairchild (1012,1013)**	
	54ACT573	† **Fairchild (1012,1013)**	
	74ACT373	**Fairchild (1012,1013)**	105
	74ACT573	**Fairchild (1012,1013)**	
	V54ACT373	† **VTC (1367,1372)**	
	V54ACT573	† **VTC (1367,1372)**	
	V74ACT373	**VTC (1367,1372)**	
	V74ACT573	**VTC (1367,1372)**	110
AHCT	**KS74AHCT373**	**Samsung (1153)**	
	KS74AHCT573	**Samsung (1153)**	
FCT	74HC373	IDT	
	IDT54FCT373	† IDT	
	IDT74FCT373	IDT	115
HC	54HC373	† Fairchild	
	54HC573	† Fairchild	
	74HC373	Fairchild	
	74HC573	Fairchild	
	GD74HC373	**Goldstar (1066)**	120
	HD74HC373	Hitachi	
		(Continued)	
Octal Transparent, D-Type, Three State			
HC		(Cont'd)	
	HD74HC573	Hitachi	
	IDT54AHCT373	† IDT	
	IDT74AHCT373	IDT	
	MC54HC373	† **Motorola (1126)**	125
	MC54HC573	† **Motorola (1126)**	
	MC74HC373	**Motorola (1126)**	
	MC74HC573	**Motorola (1126)**	
	MM54HC373	† National	
	MM54HC573	† National	130
	MM74HC373	National	
	MM74HC573	National	
	MN74HC373	Panasonic	
	CD54HC373	† **RCA (1150)**	
	CD54HC573	† **RCA (1150)**	135
	CD74HC373	**RCA (1150)**	
	CD74HC573	**RCA (1150)**	
	74HC373	Samsung	
	74HC573	Samsung	
	SP74HC373	SPI	140
	SP74HC573	SPI	
	M74HC373	SGS	
	M74HC573	SGS	
	LR74HC373	Sharp	
	74HC373	**Signetics (1158)**	145
	74HC573	**Signetics (1159)**	
	SS54HC373	† SSS	
	SS54HC573	† SSS	
	SS74HC373	SSS	
	SS74HC573	SSS	150
	SN54HC373	† **TI (714)**	
	SN54HC573	† **TI (714)**	
	SN74HC373	TI	
	SN74HC573	TI	
	TC74HC373	**Toshiba (1363)**	155
	TC74HC573	**Toshiba (1363)**	
	US74HC373	Universal	
	US74HC573	Universal	
HCT	54HCT373	† CTI	
	54HCT573	† CTI	160
	74HCT373	CTI	
	74HCT573	CTI	
	GD74HCT373	**Goldstar (1066)**	
	HD74HCT373	Hitachi	
	HD74HCT573	Hitachi	165
	MIC74HCT373	Micrel	
	MIC74HCT573	Micrel	
	74HCTR373	MicroTech	
	74HCTR573	MicroTech	
	MD54HCT373R	† Mitel	170
	MD54HCT573R	† Mitel	
	MD74HCT373R	Mitel	
	MD74HCT573R	Mitel	
	M74HC373	Mitsubishi	
	MC54HCT373	† Motorola	175
	MC74HCT373	Motorola	
	MM54HCT373	† National	
	MM74HCT373	National	
	MV74HCT373	Plessey	
	MV74HCT573	Plessey	180
	CD54HCT373	† **RCA (1150)**	
	CD54HCT573	† **RCA (1150)**	
	CD74HCT373	**RCA (1150)**	
	CD74HCT573	**RCA (1150)**	
	KS74HCTLS373	**Samsung (1153)**	185
	KS74HCTLS573	**Samsung (1153)**	
	SP74HCT373	SPI	
	SP74HCT573	SPI	
	M74HCT373	SGS	
	74HCT373	**Signetics (1158)**	190
	74HCT573	**Signetics (1159)**	
	SS54HCT373	† SSS	
		(Continued)	

† Military Temperature Range (−55° to 125°C)

* Typical Value

Bold face indicates additional data is provided on the page noted.

DIGITAL-CMOS (Cont'd)

Function	Device	Source	Line
Latches (Cont'd)			
Octal Transparent, D-Type, Three State			
HCT (Cont'd)			
	SS54HCT573	† SSS	
	SS74HCT373	SSS	
	SS74HCT573	SSS	
	54HCT373	† Supertex	
	54HCT573	† Supertex	5
	74HCT373	Supertex	
	74HCT573	Supertex	
	SN54HCT373	**† TI (714)**	
	SN74HCT373	TI	
	SN74HCT573	TI	10
	TC74HCT373	**Toshiba (1363)**	
	TC74HCT573	Toshiba	
	US74HCT373	Universal	
	ZX54HCT/LS373	† Zytrex	
	ZX54HCT/LS573	† Zytrex	15
	ZX74HCT/LS373	Zytrex	
	ZX74HCT/LS573	Zytrex	
	ZX74HCT573	Zytrex	
SC	G74SC373	GTEMicro	
	MV74SC573	Plessey	20
	SP74SC373	SPI	
	SP74SC573	SPI	
	74SC373	Supertex	
	74SC573	Supertex	
4XXX	HEF40373B	Signetics	25
40HXXX	**TC40H373**	**Toshiba (1363)**	
Octal Transparent, Three-State, Inverted Output			
AC	**54AC563**	**† Fairchild (1012,1013)**	
	74AC563	**Fairchild (1012,1013)**	
ACT	**54ACT563**	**† Fairchild (1012,1013)**	
	74ACT563	**Fairchild (1012,1013)**	30
	V54ACT533	**† VTC (1367,1372)**	
	V54ACT563	**† VTC (1367,1372)**	
	V54ACT580	**† VTC (1367,1372)**	
	V74ACT533	**VTC (1367,1372)**	
	V74ACT563	**VTC (1367,1372)**	35
	V74ACT580	**VTC (1367,1372)**	
AHCT	**KS74AHCT533**	**Samsung (1153)**	
	KS74AHCT563	**Samsung (1153)**	
FCT	74HC533	IDT	
	IDT54FCT533	† IDT	40
	IDT74FCT533	IDT	
HC	54HC533	† Fairchild	
	54HC563	† Fairchild	
	74HC533	Fairchild	
	74HC563	Fairchild	45
	HD74HC533	Hitachi	
	HD74HC563	Hitachi	
	IDT54AHCT533	† IDT	
	IDT74AHCT533	IDT	
	M74HC533	Mitsubishi	50
	M74HC563	Mitsubishi	
	MC54HC533	**† Motorola (1126)**	
	MC54HC563	**† Motorola (1126)**	
	MC74HC533	**Motorola (1126)**	
	MC74HC563	**Motorola (1126)**	55
	MM54HC533	† National	
	MM54HC563	† National	
	MM74HC533	National	
	MM74HC563	National	
	CD54HC533	**† RCA (1150)**	60
	CD54HC563	**† RCA (1150)**	
	CD74HC533	**RCA (1150)**	
	CD74HC563	**RCA (1150)**	
Octal Transparent, Three-State, Inverted Output			
HC (Cont'd)			
	74HC533	Samsung	
	74HC563	Samsung	65
	SP74HC533	SPI	
	SP74HC563	SPI	
	M74HC533	SGS	
	LR74HC533	Sharp	
	74HC533	**Signetics (1159)**	70
	74HC563	**Signetics (1159)**	
	SS54HC533	† SSS	
	SS54HC563	† SSS	
	SS74HC533	SSS	
	SS74HC563	SSS	75
	SN54HC533	**† TI (714)**	
	SN54HC563	**† TI (714)**	
	SN74HC533	TI	
	SN74HC563	TI	
	TC74HC533	**Toshiba (1363)**	80
	TC74HC563	**Toshiba (1363)**	
	US74HC533	Universal	
	US74HC563	Universal	
HCT	54HCT533	† CTI	
	54HCT563	† CTI	85
	74HCT533	CTI	
	74HCT563	CTI	
	HD74HCT533	Hitachi	
	HD74HCT563	Hitachi	
	MIC74HCT533	Micrel	90
	MIC74HCT563	Micrel	
	74HCTR533	MicroTech	
	74HCTR563	MicroTech	
	MC54HCT533	† Motorola	
	MC74HCT533	Motorola	95
	MM54HCT533	† National	
	MM74HCT533	National	
	MV74HCT533	Plessey	
	MV74HCT563	Plessey	
	CD54HCT533	**† RCA (1150)**	100
	CD54HCT563	**† RCA (1150)**	
	CD74HCT533	**RCA (1150)**	
	CD74HCT563	**RCA (1150)**	
	KS74HCTLS533	**Samsung (1153)**	
	KS74HCTLS563	**Samsung (1153)**	105
	SP74HCT533	SPI	
	SP74HCT563	SPI	
	M74HCT563	SGS	
	74HCT533	**Signetics (1159)**	
	74HCT563	**Signetics (1159)**	110
	SS54HCT533	† SSS	
	SS54HCT563	† SSS	
	SS74HCT533	SSS	
	SS74HCT563	SSS	
	54HCT533	† Supertex	115
	54HCT563	† Supertex	
	74HCT533	Supertex	
	74HCT563	Supertex	
	SN54HCT533	† TI	
	SN74HCT533	TI	120
	SN74HCT563	TI	
	TC74HCT563	**Toshiba (1363)**	
	US74HCT533	Universal	
	US74HCT563	Universal	
	ZX54HCT/LS533	† Zytrex	125
	ZX54HCT/LS563	† Zytrex	
	ZX74HCT/LS533	Zytrex	
	ZX74HCT563	Zytrex	
SC	MV74SC533	Plessey	
	MV74SC563	Plessey	130
	74SC533	Supertex	
	74SC563	Supertex	
Octal, TTL Input, Three-State			
HC	MM54HC4302	† National	
	MM74HC4302	National	
Octal, TTL Input, Three-State, Inverting			
HC	MM54HC4301	† National	135
	MM74HC4301	National	
4-Bit Bistable			
HC	54HC75	† Fairchild	
	74HC75	Fairchild	
	HD74HC75	Hitachi	
	M74HC75	Mitsubishi	140
	MC54HC75	**† Motorola (1126)**	
	MC74HC75	**Motorola (1126)**	
	MM54HC75	† National	
	MM74HC75	National	
	MN74HC75	Panasonic	145
	CD54HC75	**† RCA (1150)**	
	CD74HC75	**RCA (1150)**	
	SP74HC75	SPI	
	M74HC75	SGS	
	74HC75	**Signetics (1156)**	150
	SS54HC75	† SSS	
	SS74HC75	SSS	
	SN54HC75	**† TI (714)**	
	SN74HC75	TI	
	TC74HC75	**Toshiba (1363)**	155
	US74HC75	Universal	
HCT	**CD54HCT75**	**† RCA (1150)**	
	CD74HCT75	**RCA (1150)**	
	74HCT75	**Signetics (1156)**	
	SS54HCT75	† SSS	160
	SS74HCT75	SSS	
	US74HCT75	Universal	
8-Bit			
HC	MC54HC793	† Motorola	
	MC74HC793	Motorola	
8-Bit Addressable, Bidirectional Data Port (serial in/out and parallel out)			
4XXX	**MC14599BA**	**† Motorola (1126)**	165
	MC14599BC	**Motorola (1126)**	
8-Bit Addressable Input, Parallel Output, Three-State			
4XXX	**MC14598BA**	**† Motorola (1126)**	
	MC14598BC	**Motorola (1126)**	
8-Bit Addressable (serial in, parallel out)			
AHCT	**KS74AHCT259**	**Samsung (1153)**	
HC	54HC259	† Fairchild	170
	74HC259	Fairchild	
	GD74HC259	**Goldstar (1066)**	
	HD74HC259	Hitachi	
	M74HC259	Mitsubishi	
	MC54HC259	**† Motorola (1126)**	175
	MC74HC259	**Motorola (1126)**	
	MM54HC259	† National	
	MM54HC77	† National	
	MM74HC259	National	
	MM74HC77	National	180
	CD54HC259	**† RCA (1150)**	
	CD74HC259	**RCA (1150)**	
	SP74HC259	SPI	
	M74HC259	SGS	
	LR74HC259	Sharp	185
	74HC259	**Signetics (1158)**	
	SS54HC259	† SSS	
	SS74HC259	SSS	
	SN54HC259	**† TI (714)**	
	SN54HC4724	**† TI (714)**	190
	SN74HC259	TI	
	SN74HC4724	TI	
	TC74HC259	**Toshiba (1363)**	
	US74HC259	Universal	

(Continued)

† Military Temperature Range (−55° to 125°C)

* Typical Value

Bold face indicates additional data is provided on the page noted.

DIGITAL-CMOS (Cont'd)

Latches (Cont'd)

Function	Device	Source	Line
8-Bit Addressable (serial in, parallel out) (Cont'd)			
HCT	**GD74HCT259**	**Goldstar (1066)**	
	CD54HCT259	† **RCA (1150)**	
	CD74HCT259	**RCA (1150)**	
	KS74HCTLS259	**Samsung (1153)**	
	74HCT259	**Signetics (1158)**	5
	SS54HCT259	† SSS	
	SS74HCT259	SSS	
	US74HCT259	Universal	
	ZX54HCT/LS259	† Zytrex	
	ZX74HCT/LS259	Zytrex	10
4XXX	F4724BC	Fairchild	
	F4724BM	† Fairchild	
	MC14099BA	† **Motorola (1126)**	
	MC14099BC	**Motorola (1126)**	
	CD4099BC	National	15
	CD4099BM	† National	
	CD4724BC	National	
	CD4724BM	† National	
	CD4099B	† **RCA (704,1146)**	
	CD4099BE	**RCA (704,1146)**	20
	CD4724B	† **RCA (1146)**	
	CD4724BE	**RCA (1146)**	
	HCC4099B	† SGS	
	HCF4099B	SGS	
	HEF4724B	Signetics	25
	883C4099B	† SSS	
	BCL4099B	SSS	
	SCL4099B	SSS	
	TC4099B	**Toshiba (1363)**	
40HXXX	**TC40H259**	**Toshiba (1363)**	30
8-Bit, Counter, Incremented Input, Parallel Output, Three-State			
4XXX	**MC14597BA**	† **Motorola (1126)**	
	MC14597BC	**Motorola (1126)**	
10-Bit Transparent, D-Type, Three-State, Inverting			
ACT	**V54ACT842**	† **VTC (1367,1372,1374)**	
	V74ACT842	**VTC (1367,1372,1374)**	
10-Bit Transparent, D-Type, Three-State, Non-Inverting			
ACT	**V54ACT841**	† **VTC (1367,1372,1374)**	35
	V74ACT841	**VTC (1367,1372,1374)**	
8-Bit Transparent, D-Type, Three-State, Inverting			
ACT	**V54ACT846**	† **VTC (1367,1372,1375)**	
	V74ACT846	**VTC (1367,1372,1375)**	
8-Bit Transparent, D-Type, Three-State, Non-Inverting			
ACT	**V54ACT845**	† **VTC (1367,1372,1375)**	
	V74ACT845	**VTC (1367,1372,1375)**	40
9-Bit Transparent, D-Type, Three-State, Inverting			
ACT	**V54ACT844**	† **VTC (1367,1372,1375)**	
	V74ACT844	**VTC (1367,1372,1375)**	
9-Bit Transparent, D-Type, Three-State, Non-Inverting			
ACT	**V54ACT843**	† **VTC (1367,1372,1375)**	
	V74ACT843	**VTC (1367,1372,1375)**	

Memories

Function	Device	Source	Line
For additional information see Master Selection Guide-Memory Sections.			45
Dual-Port RAM, 256 Bytes			
HC	**MCM68HC34**	**Motorola (1662,4122)**	
4-Bit x 16 FIFO Register			
HC	**CD54HC40105**	† **RCA (1149)**	
	CD74HC40105	**RCA (1149)**	
	74HC40105	**Signetics (1161)**	
HCT	**CD54HCT40105**	† **RCA (1149)**	50
	CD74HCT40105	**RCA (1149)**	
	74HCT40105	**Signetics (1161)**	
8-Bit Serial Static RAM (128x8)			
HC	MC68HC68R1	Motorola	
8-Bit Serial Static RAM (256x8)			
HC	MC68HC68R2	Motorola	
16-Bit FIFO (4x4)			
4XXX	**CD40105B**	† **RCA (1146)**	55
	CD40105BE	**RCA (1146)**	
	HCC40105B	† SGS	
	HCF40105B	SGS	
16-Bit Multiport Register File (4x4 read while write RAM)			
4XXX	MC14580BA	† Motorola	
	MC14580BC	Motorola	60
	CD40108B	† **RCA (1146,1147)**	
	CD40108BE	**RCA (1146,1147)**	
	CD40208B	† **RCA (1146,1147)**	
	CD40208BE	**RCA (1146,1147)**	
	HCC40208B	† SGS	65
	HCF40208B	SGS	
16-Bit (4x4) Register File			
HC	**CD54HC670**	† **RCA (1149)**	
	CD74HC670	**RCA (1149)**	
	74HC670	**Signetics (1159)**	
	TC74HC670	**Toshiba (1363)**	70
HCT	**CD54HCT670**	† **RCA (1149)**	
	CD74HCT670	**RCA (1149)**	
	SP74HCT670	SPI	
	74HCT670	**Signetics (1159)**	
SC	SP74SC670	SPI	75
32-Bit RAM (binary addressing)			
4XXX	CD4036A	† RCA	
	CD4036AE	RCA	
	CM4036A	† Solitron	
	CM4036AE	† Solitron	
	TC4036B	**Toshiba (1363)**	80
32-Bit RAM (direct word line addressing)			
4XXX	CD4039A	† RCA	
	CD4039AE	RCA	
	CM4039A	† Solitron	
	CM4039AE	Solitron	
	TC4039B	**Toshiba (1363)**	85
64-Bit FIFO (16x4)			
4XXX	F4703BC	Fairchild	
	F4703BM	† Fairchild	
64-Bit Multiport Register File (8x8) with 5 Ports			
	LRF08C	† LogicDev	
	LRF08M	† LogicDev	
TTL(C)	LRF08C	† LogicDev	90
64-Bit Multiport Register File (8x8) with 5 Ports			
	LRF01C	LogicDev	
	LRF01M	† LogicDev	
64-Bit Program Stack (16x4 LIFO)			
4XXX	F4706BC	Fairchild	
	F4706BM	† Fairchild	

Function	Device	Source	Line
64-Bit RAM (16x4)	**CY7C189C**	**Cypress (4002,4005)**	95
	CY7C190C	**Cypress (4002,4005)**	
	CY7C190M	**Cypress (4002,4005)**	
C	MM54C89	† National	
	MM74C89	National	
HC	SN74HC189	TI	100
HCT	**CY7C189M**	**Cypress (4002,4005)**	
	SN74HCT189	TI	
	SN74HCT219	TI	
4XXX	F4725BC	Fairchild	
	F4725BM	† Fairchild	105
	CD40114B	† RCA	
	CD40114BE	RCA	
64-Bit RAM (16x4 clocked RAM, three state output register)			
4XXX	F4710BC	Fairchild	
	F4710BM	† Fairchild	
64-Bit RAM (64x1)			
4XXX	MCM14505A	† Motorola	110
	MCM14505C	Motorola	
	HEF4505B	Signetics	
256-Bit RAM (256x1)			
C	MM54C200	† National	
	MM74C200	National	
4XXX	F4720AC	Fairchild	115
	F4720AM	† Fairchild	
	F4720C	Fairchild	
	F4720M	† Fairchild	
	MCM14537A	† Motorola	
	MCM14537C	Motorola	120
	CD40061	RCA	
	CD40061A	† RCA	
	HEF4720B	Signetics	
	HEF4720V	† Signetics	
256-Bit RAM (32x8)			
	HMMP1824	† Hughes	125
	HMMP1824C	† Hughes	
	CDP1824	† **RCA (1673,1676)**	
	CDP1824C	† **RCA (1673,1676)**	
HC	HCMP1824	Hughes	
	HCMP1824C	Hughes	130
256-Bit RAM (64x4)			
	COP498	National	
C	MM54C910	† National	
	MM74C910	National	
4XXX	MCM14552A	† Motorola	
	MCM14552C	Motorola	135

Multiplexers (Digital)

Function	Device	Source	Line
See also Interface—Analog Switches, Multiplexers			
Dual 4-Channel			
AC	**54AC153**	† **Fairchild (1011,1015)**	
	74AC153	**Fairchild (1011,1015)**	
HC	M74HC153	Mitsubishi	
	MC54HC153	† **Motorola (1129)**	140
	MC74HC153	**Motorola (1129)**	
	SP74HC153	SPI	
	M74HC153	SGS	
	SN54HC153	† **TI (714)**	
	SN74HC153	TI	145

(Continued)

† Military Temperature Range (−55° to 125°C)

* Typical Value

Bold face indicates additional data is provided on the page noted.

DIGITAL-CMOS (Cont'd)

Multiplexers (Digital) (Cont'd)

Function	Device	Source	Line
Dual 4-Channel (Cont'd)			
HCT	US74HCT153	Universal	
4XXX	F4539BC	Fairchild	
	F4539BM	† Fairchild	
	MC14539BA	† **Motorola** (1129)	
	MC14539BC	**Motorola** (1129)	5
	MN4539B	Panasonic	
	HEF4539B	Signetics	
	TC4539B	**Toshiba** (1363)	
40HXXX	LR40H153	Sharp	
	TC40H153	**Toshiba** (1363)	10
Dual 4-Channel, Three-State			
HC	54HC253	† Fairchild	
	74HC253	Fairchild	
	M74HC253	Mitsubishi	
	74HC253	**Signetics** (1158)	
	SN54HC253	† **TI** (714)	15
	SN74HC253	TI	
	TC74HC253	**Toshiba** (1363)	
HCT	**74HCT253**	**Signetics** (1158)	
Dual 4-Input			
HC	HD74HC153	Hitachi	
	MM54HC153	† National	20
	MM74HC153	National	
	CD54HC153	† **RCA** (1150)	
	CD74HC153	**RCA** (1150)	
	US74HC153	Universal	
HCT	74HCTR153	MicroTech	25
	MM54HCT153	† National	
	MM74HCT153	National	
	CD54HCT153	† **RCA** (1150)	
	CD74HCT153	**RCA** (1150)	
Dual 4-Input, Inverting			
HC	HD74HC352	Hitachi	30
	SN54HC352	† **TI** (714)	
	SN74HC352	TI	
Dual 4-Input, Three-State			
AC	**54AC253**	† **Fairchild** (1011,1015)	
	74AC253	**Fairchild** (1011,1015)	
HC	HD74HC253	Hitachi	35
	HD74HC257	Hitachi	
	MC54HC253	† **Motorola** (1129)	
	MC74HC253	**Motorola** (1129)	
	MM54HC253	† National	
	MM74HC253	National	40
	CD54HC253	**RCA** (1150)	
	CD74HC253	**RCA** (1150)	
	SP74HC253	SPI	
	M74HC253	SGS	
	SS54HC253	SSS	45
	SS74HC253	SSS	
HCT	MM54HCT253	† National	
	MM74HCT253	National	
	CD54HCT253	**RCA** (1150)	
	CD74HCT253	**RCA** (1150)	50
	SS54HCT253	SSS	
	SS74HCT253	SSS	
Dual 4-Input, Three-State, Inverting			
HC	HD74HC353	Hitachi	
	SN54HC353	† **TI** (714)	
	SN74HC353	TI	55
Quad 2-Input Data Selector			
AC	**54AC157**	† **Fairchild** (1011,1015)	
	74AC157	**Fairchild** (1015)	
		(Continued)	

Function	Device	Source	Line
Quad 2-Input Data Selector (Cont'd)			
AHCT	**KS74AHCT157**	**Samsung** (1153)	
C	MM54C157	† National	
	MM74C157	National	60
HC	**GD74HC157**	**Goldstar** (1066)	
	HD74HC157	Hitachi	
	M74HC157	Mitsubishi	
	MC54HC157	† **Motorola** (1129)	
	MC74HC157	**Motorola** (1129)	65
	MM54HC157	† National	
	MM54HC158	† National	
	MM74HC157	National	
	MM74HC158	National	
	MN74HC157	Panasonic	70
	CD54HC157	† **RCA** (1150)	
	CD74HC157	**RCA** (1150)	
	SP74HC157	SPI	
	M74HC157	SGS	
	LR74HC157	Sharp	75
	74HC157	**Signetics** (1157)	
	SS54HC157	† SSS	
	SS74HC157	SSS	
	SN54HC157	† **TI** (714)	
	SN74HC157	TI	80
	TC74HC157	**Toshiba** (1363)	
	US74HC157	Universal	
HCT	**GD74HCT157**	**Goldstar** (1066)	
	74HCTR157	MicroTech	
	MC54HCT157	† Motorola	85
	MC74HCT157	Motorola	
	CD54HCT157	† **RCA** (1150)	
	CD74HCT157	**RCA** (1150)	
	KS74HCTLS157	**Samsung** (1153)	
	74HCT157	**Signetics** (1157)	90
	SS54HCT157	† SSS	
	SS74HCT157	SSS	
	US74HCT157	Universal	
	ZX54HCT/LS157	† Zytrex	
	ZX74HCT/LS157	Zytrex	95
40HXXX	LR40H157	Sharp	
	TC40H157	**Toshiba** (1363)	
Quad 2-Input Data Selector, Inverting			
AC	**54AC158**	† **Fairchild** (1011,1015)	
	74AC158	**Fairchild** (1011,1015)	
AHCT	**KS74AHCT158**	**Samsung** (1153)	100
HC	**GD74HC158**	**Goldstar** (1066)	
	HD74HC158	Hitachi	
	M74HC158	Mitsubishi	
	MC54HC158	† **Motorola** (1129)	
	MC74HC158	**Motorola** (1129)	105
	MN74HC158	Panasonic	
	CD54HC158	† **RCA** (1150)	
	CD74HC158	**RCA** (1150)	
	SP74HC158	SPI	
	M74HC158	SGS	110
	LR74HC158	Sharp	
	74HC158	**Signetics** (1157)	
	74HC160	**Signetics** (1157)	
	SN54HC158	† **TI** (714)	
	SN74HC158	TI	115
	TC74HC158	**Toshiba** (1363)	
	US74HC158	Universal	
HCT	**GD74HCT158**	**Goldstar** (1066)	
	74HCTR158	MicroTech	
	MC54HCT158	† Motorola	120
	MC74HCT158	Motorola	
	CD54HCT158	† **RCA** (1150)	
	CD74HCT158	**RCA** (1150)	
	KS74HCTLS158	**Samsung** (1153)	
	74HCT158	**Signetics** (1157)	125
		(Continued)	

Function	Device	Source	Line
Quad 2-Input Data Selector, Inverting			
HCT (Cont'd)			
	74HCT160	**Signetics** (1157)	
	US74HCT158	Universal	
	ZX54HCT/LS158	† Zytrex	
	ZX74HCT/LS158	Zytrex	
40HXXX	LR40H158	Sharp	130
	TC40H158	**Toshiba** (1363)	
Quad 2-Input Data Selector, Three-State			
AC	**54AC257**	† **Fairchild** (1011,1015)	
	74AC257	**Fairchild** (1011,1015)	
AHCT	**KS74AHCT257**	**Samsung** (1153)	
HC	54HC257	† Fairchild	135
	74HC257	Fairchild	
	GD74HC257	**Goldstar** (1066)	
	M74HC257	Mitsubishi	
	MC54HC257	† **Motorola** (1129)	
	MC74HC257	**Motorola** (1129)	140
	MM54HC257	† National	
	MM74HC257	National	
	CD54HC257	† **RCA** (1150)	
	CD74HC257	**RCA** (1150)	
	SP74HC257	SPI	145
	M74HC257	SGS	
	LR74HC257	Sharp	
	74HC257	**Signetics** (1158)	
	SN54HC257	† **TI** (714)	
	SN74HC257	TI	150
	TC74HC257	**Toshiba** (1363)	
	US74HC257	Universal	
HCT	**GD74HCT257**	**Goldstar** (1066)	
	CD54HCT257	† **RCA** (1150)	
	CD74HCT257	**RCA** (1150)	155
	KS74HCTLS257	**Samsung** (1153)	
	74HCT257	**Signetics** (1158)	
	US74HCT257	Universal	
	ZX54HCT/LS257	† Zytrex	
	ZX74HCT/LS257	Zytrex	160
4XXX	**CD40257B**	† **RCA** (704,1147)	
	CD40257BE	**RCA** (704,1147)	
	HCC40257B	† SGS	
	HCF40257B	SGS	
Quad 2-Input, Inverting, Three-State			
AC	**54AC258**	† **Fairchild** (1011,1015)	165
	74AC258	**Fairchild** (1011,1015)	
AHCT	**KS74AHCT258**	**Samsung** (1153)	
HC	HD74HC258	Hitachi	
	MC54HC258	† Motorola	
	MC74HC258	Motorola	170
	CD54HC258	† **RCA** (1150)	
	CD74HC258	**RCA** (1150)	
	SP74HC258	SPI	
	74HC258	**Signetics** (1158)	
	SN54HC258	† **TI** (714)	175
	SN74HC258	TI	
	TC74HC258	**Toshiba** (1363)	
	US74HC258	Universal	
HCT	**CD54HCT258**	† **RCA** (1150)	
	CD74HCT258	**RCA** (1150)	180
	KS74HCTLS258	**Samsung** (1153)	
	74HCT258	**Signetics** (1158)	
	US74HCT258	Universal	
	ZX54HCT/LS258	† Zytrex	
	ZX74HCT/LS258	Zytrex	185

† Military Temperature Range (−55° to 125°C)

* Typical Value

Bold face indicates additional data is provided on the page noted.

DIGITAL–CMOS (Cont'd)

Multiplexers (Digital) (Cont'd)

Function	Device	Source	Line
Quad 2-Input, with Storage			
AHCT	**KS74AHCT399**	**Samsung (1153)**	
HC	HD74HC298	Hitachi	
	M74HC298	Mitsubishi	
	MC54HC298	† Motorola	
	MC74HC298	Motorola	5
	MM54HC298	† National	
	MM74HC298	National	
	SP74HC298	SPI	
	M74HC298	SGS	
	SN54HC298	**† TI (714)**	10
	SN74HC298	TI	
	TC74HC298	**Toshiba (1363)**	
	US74HC298	Universal	
HCT	US74HCT298	Universal	
Octal 2-Input, Three-State, Non-Inverting			
HC	SN74HC604	TI	15
4-Bit AND/OR Selector			
4XXX	F4519BC	Fairchild	
	F4519BM	† Fairchild	
	MC14519BA	**† Motorola (1124,1129)**	
	MC14519BC	**Motorola (1124,1129)**	
	CD4519BC	National	20
	CD4519BM	† National	
	HEF4519B	Signetics	
	TC4519B	**Toshiba (1363)**	
8-Channel			
AC	**54AC151**	**† Fairchild (1011,1015)**	
	74AC151	**Fairchild (1011,1015)**	25
C	MM54C151	† National	
	MM74C151	National	
HC	54HC151	† Fairchild	
	74HC151	Fairchild	
	GD74HC151	**Goldstar (1066)**	30
	HD74HC151	Hitachi	
	M74HC151	Mitsubishi	
	MC54HC151	**† Motorola (1129)**	
	MC74HC151	**Motorola (1129)**	
	MM54HC151	† National	35
	MM74HC151	National	
	MN74HC151	Panasonic	
	CD54HC151	**† RCA (1150)**	
	CD74HC151	**RCA (1150)**	
	SP74HC151	SPI	40
	M74HC151	SGS	
	LR74HC151	Sharp	
	74HC151	**Signetics (1157)**	
	SN54HC151	**† TI (714)**	
	SN74HC151	TI	45
	TC74HC151	**Toshiba (1363)**	
	US74HC151	Universal	
HCT	**CD54HCT151**	**† RCA (1150)**	
	CD74HCT151	**RCA (1150)**	
	74HCT151	**Signetics (1157)**	50
	US74HCT151	Universal	
40HXXX	**TC40H151**	**Toshiba (1363)**	
8-Channel Data Selector			
HC	HD74HC152	Hitachi	
	SN54HC152	**† TI (714)**	
	SN74HC152	TI	55
HCT	74HCT357	MicroTech	
4XXX	F4512BC	Fairchild	
	F4512BM	† Fairchild	
	MC14512A	**† Motorola (1129)**	
	MC14512C	**Motorola (1129)**	60
		(Continued)	

Function	Device	Source	Line
8-Channel Data Selector			
4XXX		(Cont'd)	
	CD4512BC	National	
	CD4512BM	† National	
	MN4512B	† Panasonic	
	CD4512B	**† RCA (1147)**	
	CD4512BE	**RCA (1147)**	65
	HCC4512B	† SGS	
	HCF4512B	SGS	
	HEF4512B	Signetics	
	883C4512B	† SSS	
	BCL4512B	SSS	70
	SCL4512B	SSS	
	TC4512B	**Toshiba (1363)**	
8-Channel Differential Multiplexer/Demultiplexer			
4XXX	MC14067BA	† Motorola	
	MC14067BC	Motorola	
8-Channel, Three State			
HC	MM54HC251	† National	75
	MM74HC251	National	
8-Channel, Three-State			
HC	54HC153	† Fairchild	
	54HC251	† Fairchild	
	54HC4512	† Fairchild	
	74HC153	Fairchild	80
	74HC251	Fairchild	
	74HC4512	Fairchild	
	GD74HC153	**Goldstar (1066)**	
	M74HC251	Mitsubishi	
	LR74HC251	Sharp	85
	74HC153	**Signetics (1157)**	
	74HC251	**Signetics (1158)**	
	SN54HC251	**† TI (714)**	
	SN74HC251	TI	
	SN74HC354	TI	90
	SN74HC356	TI	
	TC74HC153	**Toshiba (1363)**	
	TC74HC251	**Toshiba (1363)**	
HCT	**GD74HCT153**	**Goldstar (1066)**	
	74HCT153	**Signetics (1157)**	95
	74HCT251	**Signetics (1158)**	
	US74HCT251	Universal	
8-Input with Latch, Three-State			
HC	MM54HC354	† National	
	MM54HC356	† National	
	MM74HC354	National	100
	MM74HC356	National	
8-Input, Three-State			
AC	**54AC251**	**† Fairchild (1011,1015)**	
	74AC251	**Fairchild (1011,1015)**	
HC	HD74HC251	Hitachi	
	HD74HC354	Hitachi	105
	HD74HC356	Hitachi	
	MC54HC251	**† Motorola (1129)**	
	MC54HC354	**† Motorola (1130)**	
	MC54HC356	**† Motorola (1130)**	
	MC74HC251	**Motorola (1129)**	110
	MC74HC354	**Motorola (1130)**	
	MC74HC356	**Motorola (1130)**	
	CD54HC251	**† RCA (1150)**	
	CD54HC354	**† RCA (1150)**	
	CD54HC356	**† RCA (1150)**	115
	CD74HC251	**RCA (1150)**	
	CD74HC354	**RCA (1150)**	
	CD74HC356	**RCA (1150)**	
	SP74HC251	SPI	
	M74HC251	SGS	120
	M74HC354	SGS	
	M74HC356	SGS	
	74HC354	**Signetics (1158)**	
		(Continued)	

Function	Device	Source	Line
8-Input, Three-State			
HC		(Cont'd)	
	74HC356	**Signetics (1158)**	
	SS54HC251	† SSS	125
	SS54HC354	† SSS	
	SS74HC251	SSS	
	SS74HC354	SSS	
	TC74HC354	**Toshiba (1363)**	
	TC74HC356	**Toshiba (1363)**	130
	US74HC251	Universal	
	US74HC354	Universal	
	US74HC356	Universal	
HCT	74HCTR354	MicroTech	
	74HCTR356	MicroTech	135
	CD54HCT251	**† RCA (1150)**	
	CD54HCT354	**† RCA (1150)**	
	CD54HCT356	**† RCA (1150)**	
	CD74HCT251	**RCA (1150)**	
	CD74HCT354	**RCA (1150)**	140
	CD74HCT356	**RCA (1150)**	
	74HCT354	**Signetics (1158)**	
	74HCT356	**Signetics (1158)**	
	SS54HCT251	† SSS	
	SS54HCT354	† SSS	145
	SS74HCT251	SSS	
	SS74HCT354	SSS	
	US74HCT356	Universal	
10-Line to 4-Line Priority Encoder			
HC	54HC147	Fairchild	
	74HC147	Fairchild	150
	MM54HC147	National	
	MM74HC147	National	
10-Line to 4-Line BCD Priority Encoder			
HC	54HC147	† Fairchild	
	74HC147	Fairchild	
	MM54HC147	† National	155
	MM74HC147	National	
16-Channel	TP4320A	TI	
C	MM54C150	† National	
	MM74C150	National	
16-Channel Multiplexer/Demultiplexer			
4XXX	MC14097BA	† Motorola	160
	MC14097BC	Motorola	
16-Channel, Three-State			
	MM72C19	† National	
	MM82C19	National	

Multivibrators

Function	Device	Source	Line
Monostable/Astable, Retriggerable			
HC	54HC4046	† Fairchild	
	54HC4047	† Fairchild	165
	74HC4046	Fairchild	
	74HC4047	Fairchild	
4XXX	F4047BC	Fairchild	
	F4047BM	† Fairchild	
	CD4047BC	National	170
	CD4047BM	† National	
	CD4047A	**† RCA (1145)**	
	CD4047AE	**RCA (1145)**	
	CD4047B	**† RCA (1145)**	
	CD4047BE	**RCA (1145)**	175
	HCC4047B	† SGS	
	HCF4047B	SGS	
	HEF4047B	Signetics	
	CM4047A	† Solitron	
	CM4047AE	Solitron	180
	883C4047B	† SSS	
	BCL4047B	SSS	
	SCL4047B	SSS	
	TC4047B	**Toshiba (1363)**	

† Military Temperature Range (−55° to 125°C)

* Typical Value

Bold face indicates additional data is provided on the page noted.

DIGITAL-CMOS (Cont'd)

Multivibrators (Cont'd)

Function	Device	Source	Line
Monostable,Schmitt Trigger Input			
AHCT	**KS74AHCT121**	**Samsung (1153)**	
Dual Monostable			
C	MM54C221	† National	
	MM74C221	National	
HC	54HC221	† Fairchild	
	54HC4538	† Fairchild	5
	74HC221	Fairchild	
	74HC4538	Fairchild	
	HD74HC221	Hitachi	
	HD74HC423	Hitachi	
	HD74HC4538	Hitachi	10
	M74HC123	Mitsubishi	
	M74HC221	Mitsubishi	
	MC54HC221A	† **Motorola (1131)**	
	MC54HC423A	† Motorola	
	MC54HC4538	† **Motorola (1131)**	15
	MC74HC221A	**Motorola (1131)**	
	MC74HC423A	Motorola	
	MC74HC4538	**Motorola (1131)**	
	MM54HC221A	† National	
	MM54HC423A	† National	20
	MM54HC4538	† National	
	MM74HC221A	National	
	MM74HC423A	National	
	MM74HC4538	National	
	MN74HC221	Panasonic	25
	CD54HC221	† **RCA (1150)**	
	CD54HC423	† **RCA (1150)**	
	CD54HC4538	† **RCA (1150)**	
	CD74HC221	**RCA (1150)**	
	CD74HC423	**RCA (1150)**	30
	CD74HC4538	**RCA (1150)**	
	M74HC423	SGS	
	M74HC4538	SGS	
	74HC221	Signetics	
	74HC423	**Signetics (1158)**	35
	74HC4538	**Signetics (1161)**	
	TC74HC123	**Toshiba (1363)**	
	TC74HC221	**Toshiba (1363)**	
	TC74HC423	† **Toshiba (1363)**	
	TC74HC4538	**Toshiba (1363)**	40
	US74HC221	Universal	
	US74HC423	Universal	
	US74HC4538	Universal	
HCT	**CD54HCT221**	† **RCA (1150)**	
	CD54HCT423	† **RCA (1150)**	45
	CD54HCT4538	† **RCA (1150)**	
	CD74HCT221	**RCA (1150)**	
	CD74HCT423	**RCA (1150)**	
	CD74HCT4538	**RCA (1150)**	
	74HCT221	Signetics	50
	74HCT423	**Signetics (1158)**	
	74HCT4538	**Signetics (1161)**	
	US74HCT123	Universal	
	US74HCT423	Universal	
	US74HCT4538	Universal	55
4XXX	**MC14538BA**	† **Motorola (1131)**	
	MC14538BC	**Motorola (1131)**	
	CD4538BC	National	
	CD4538BM	† National	
	MN4528B	Panasonic	60
	MN4538B	Panasonic	
	CD4538B	† **RCA (1145)**	
	CD4538BE	**RCA (1145)**	
	HEF4538B	Signetics	
	TC4538B	**Toshiba (1363)**	65
Dual Monostable, Retriggerable			
HC	**GD74HC123**	**Goldstar (1066)**	
	HD74HC123	Hitachi	
	MC54HC123A	† **Motorola (1131)**	
		(Continued)	

Function	Device	Source	Line
Dual Monostable, Retriggerable			
HC		(Cont'd)	
	MC74HC123A	**Motorola (1131)**	
	MM54HC123	† National	70
	MM54HC123A	† National	
	MM74HC123	National	
	MM74HC123A	National	
	MN74HC123	Panasonic	
	CD54HC123	† **RCA (1150)**	75
	CD74HC123	**RCA (1150)**	
	74HC123	**Signetics (1157)**	
	US74HC123	Universal	
HCT	**GD74HCT123**	**Goldstar (1066)**	
	CD54HCT123	† **RCA (1150)**	80
	CD74HCT123	**RCA (1150)**	
	74HCT123	**Signetics (1157)**	
4XXX	F4528BC	Fairchild	
	F4528BM	† Fairchild	
	MC14528BA	† **Motorola (1131)**	85
	MC14528BC	**Motorola (1131)**	
	CD4528BC	National	
	CD4528BM	† National	
	CD4098B	† **RCA (704,1145)**	
	CD4098BE	**RCA (704,1145)**	90
	HCC4098B	† SGS	
	HCF4098B	SGS	
	HEF4528B	Signetics	
	883C4528B	† SSS	
	BCL4528B	SSS	95
	SCL4528B	SSS	
	TC4528B	**Toshiba (1363)**	

Oscillators/Dividers

Function	Device	Source	Line
Divider, Divide by 5/6			
	RED5/6	**LSIComp (1099)**	
Divider, Divide by 6			
	D6	LSIComp	
Divider, Divide by 15/16			
	M705	SGS	100
Divider, Divide by 50/60			
	RED50/60	**LSIComp (1099)**	
Divider, Divide by 60			
	D60	LSIComp	
Divider, Divide by 100/120			
	RED100/120	**LSIComp (1099)**	
Divider, Divide by 300/360			
	RED300/360	**LSIComp (1099)**	
Divider, Divide by 3000/3600			
	RED3000/3600	**LSIComp (1099)**	105
Divider, Divide by 3600			
	D3600	LSIComp	
Oscillator/Divider (programmable timer)			
4XXX	**MC14541BA**	† **Motorola (1131)**	
	MC14541BC	**Motorola (1131)**	
	CD4541B	† **RCA (1146)**	
	CD4541BE	**RCA (1146)**	110
	HEF4541B	Signetics	
Oscillator/2^0 to 2^{24} Divider (programmable timer)			
4XXX	**MC14536BA**	† **Motorola (1131)**	
	MC14536BC	**Motorola (1131)**	
	CD4536B	† **RCA (1146)**	
	CD4536BE	**RCA (1146)**	115
Oscillator/2^8 Divider (2-5 V supplies)			
	ICM7209	**Intersil (1090)**	
Oscillator/2^8, 2310, Divider (10 V supply)			
5XXX	TC5082L	Toshiba	
Oscillator/2^8, 2310, 2311, and 2^{12} Divider (10 V supply)			
5XXX	TC5082	Toshiba	

Function	Device	Source	Line
Oscillator/2^{12} and 2^{17} Divider, also 2^{17}x10 (0.01 and 0.1 output, 6.4 MHz crystal, 3-5 V supply)			
	ICM7207	**Intersil (1090)**	
Oscillator/2^{12} and 2^{20} Divider, also 2^{20}x10 (0.1 and 1 second output with 5.2 MHz crystal, 5 V supply)			
	ICM7207A	**Intersil (1090)**	120
Oscillator/2^{12}, 2^{18}, 2^{21}, and 2^{17} Divider (also 2^{21}x60, 2-5 V supplies)			
	ICM7213	**Intersil (1090)**	
Oscillator/2^{16} Divider/Buffer			
	SCL5411	SSS	
Oscillator/2^{17} Divider (2.5-6 V supplies)			
	MM53107	National	
Oscillator/2^{21} Divider/Buffer			
4XXX	**CD4045A**	† **RCA (1146)**	
	CD4045AE	**RCA (1146)**	125
	CD4045B	† **RCA (1146)**	
	CD4045BE	**RCA (1146)**	
	HCC4045B	† SGS	
	HCF4045B	SGS	
	CM4045A	† Solitron	130
	CM4045AE	Solitron	
	883C4445B	† SSS	
	BCL4445B	SSS	
	SCL4445B	SSS	
Oscillator/2^{23} Divider			
	SCL5419	SSS	135
Oscillator/2^{24} Divider			
4XXX	**MC14521BA**	† **Motorola (1131)**	
	MC14521BC	**Motorola (1131)**	
	HEF4521B	Signetics	
	TC4521B	**Toshiba (1363)**	
Oscillator/16-Stage Divider			
	SCL5602	SSS	140
Oscillator/17-Stage Divider			
	SCL5415	SSS	
	SCL5603	SSS	
Oscillator/32768 Hz Divider			
	MM5368	National	
	MM5369	National	
See also CMOS-Counters			145

Shift Registers

Function	Device	Source	Line
Phase-Locked Loop with In-Lock Detector			
HC	**CD54HC7046**	† **RCA (1150)**	
	CD74HC7046	**RCA (1150)**	
HCT	**CD54HCT7046**	† **RCA (1150)**	
	CD74HCT7046	**RCA (1150)**	
Dual 4-Bit Serial In/Parallel Out			
HC	MC54HC4015	† Motorola	150
	MC74HC4015	Motorola	
	CD54HC4015	† **RCA (1149)**	
	CD74HC4015	**RCA (1149)**	
	74HC4015	**Signetics (1160)**	
HCT	**CD54HCT4015**	† **RCA (1149)**	155
	CD74HCT4015	**RCA (1149)**	
	74HCT4015	**Signetics (1160)**	
4XXX	F4015BC	Fairchild	
	F4015BM	Fairchild	
	MC14015BA	**Motorola (1129)**	160
	MC14015BC	**Motorola (1129)**	
	CD4015AC	National	
	CD4015BC	National	
	CD4015BM	National	
	MN4015B	Panasonic	165
	CD4015A	**RCA (704)**	
	CD4015AE	**RCA (704)**	
	CD4015B	**RCA (704)**	
	CD4015BE	**RCA (704)**	
	HCC4015B	SGS	170
		(Continued)	

† Military Temperature Range (−55° to 125°C)

* Typical Value

Bold face indicates additional data is provided on the page noted.

DIGITAL-CMOS (Cont'd)

Function	Device	Source	Line
Shift Registers (Cont'd)			
Dual 16-Bit Static	HSSR0321	† Hughes	
	HSSR0351	† Hughes	
Dual 50/64-Bit Static			
5XXX	TC5000	Toshiba	
Dual 64-Bit Static			
4XXX	**MC14517BA**	† **Motorola** (1128)	
	MC14517BC	**Motorola** (1128)	5
	CD4517B	† RCA	
	CD4517BE	RCA	
	HCF4517B	† SGS	
	HEF4517B	Signetics	
	883C4517B	† SSS	10
	BCL4517B	SSS	
	SCL4517B	SSS	
5XXX	TC5050	Toshiba	
Dual 512-Bit Dynamic			
5XXX	TC5004	Toshiba	
Quad 64-Bit Static, Separate Clock			
4XXX	F4731BC	Fairchild	15
	F4731BM	† Fairchild	
	HEF4731B	Signetics	
	HEF4731V	† Signetics	
4-Bit Bidirectional			
C	MM54C95	National	
	MM74C95	† National	20
HC	HD74HC194	Hitachi	
	M74HC194	Mitsubishi	
	MC54HC194	† **Motorola** (1128)	
	MC74HC194	**Motorola** (1128)	
	MM54HC194	† National	25
	MM74HC194	National	
	CD54HC194	† **RCA** (1149)	
	CD74HC194	**RCA** (1149)	
	SP74HC194	SPI	
	M74HC194	SGS	30
	LR74HC194	Sharp	
	74HC194	**Signetics** (1157)	
	SN54HC194	† **TI** (714)	
	SN74HC194	TI	
	TC74HC194	**Toshiba** (1363)	35
	US74HC194	Universal	
HCT	**CD54HCT194**	† **RCA** (1149)	
	CD74HCT194	**RCA** (1149)	
	KS74HCTLS193	**Samsung** (1153)	
	74HCT194	**Signetics** (1157)	40
	US74HCT193	Universal	
4XXX	F40194BC	Fairchild	
	F40194BM	† Fairchild	
	MC14194BA	† **Motorola** (1128)	
	MC14194BC	**Motorola** (1128)	45
	HCC40194B	† SGS	
	HCF40194B	SGS	
	TC40194B	**Toshiba** (1363)	
4-Bit Bidirectional Universal, Three State			
HC	**CD54HC40104**	† **RCA** (1149)	
	CD74HC40104	**RCA** (1149)	50
	74HC40104	**Signetics** (1161)	
HCT	**CD54HCT40104**	† **RCA** (1149)	
	CD74HCT40104	**RCA** (1149)	
	74HCT40104	**Signetics** (1161)	
4-Bit Parallel In/Parallel Out			
4XXX	F4035BC	Fairchild	55
	F4035BM	† Fairchild	
	MC14035BA	† **Motorola** (1128)	
	MC14035BC	**Motorola** (1128)	
	CD4035BC	National	
	CD4035BM	† National	60
	MN4035B	† Panasonic	
	CD40104B	RCA	
		(Continued)	
4-Bit Parallel In/Parallel Out			
4XXX		(Cont'd)	
	CD40194B	RCA	
	CD4035A	† RCA	
	CD4035AE	RCA	65
	CD4035B	† RCA	
	CD4035BE	RCA	
	HCC40104B	† SGS	
	HCC4035B	† SGS	
	HCF40104B	SGS	70
	HCF4035B	SGS	
	HEF40194B	Signetics	
	HEF4035B	Signetics	
	CM4035A	† Solitron	
	CM4035AE	Solitron	75
	883C4035B	† SSS	
	BCL4035B	SSS	
	SCL4035B	SSS	
	TC40104B	**Toshiba** (1363)	
	TC4035B	**Toshiba** (1363)	80
4-Bit Parallel with Clear			
C	MM54C195	† National	
	MM74C195	National	
HC	54HC195	† Fairchild	
	74HC195	Fairchild	
	HD74HC195	Hitachi	85
	HD74HC95	Hitachi	
	M74HC195	Mitsubishi	
	MC54HC195	† **Motorola** (1128)	
	MC74HC195	**Motorola** (1128)	
	MM54HC195	† National	90
	MM74HC195	National	
	CD54HC195	† **RCA** (1149)	
	CD74HC195	**RCA** (1149)	
	SP74HC195	SPI	
	M74HC195	SGS	95
	LR74HC195	Sharp	
	74HC195	**Signetics** (1157)	
	SN54HC195	† **TI** (714)	
	SN74HC195	TI	
	TC74HC195	**Toshiba** (1363)	100
	US74HC195	Universal	
HCT	**CD54HCT195**	† **RCA** (1149)	
	CD74HCT195	**RCA** (1149)	
	74HCT195	**Signetics** (1157)	
4XXX	F40195BC	Fairchild	105
	F40195BM	† Fairchild	
	CD40195BC	National	
	CD40195BM	† National	
	HEF40195B	Signetics	
8-Bit (asynchronous parallel or synchronous serial operation) Parallel In/Serial Out			
4XXX	F4021BC	Fairchild	110
	F4021BM	† Fairchild	
	MC14021BA	† **Motorola** (1128)	
	MC14021BC	**Motorola** (1128)	
	CD4021A	National	
	CD4021BC	National	115
	CD4021BM	† National	
	CD4021A	† **RCA** (704)	
	CD4021AE	**RCA** (704)	
	CD4021B	† **RCA** (704)	
	CD4021BE	**RCA** (704)	120
	HCC4021B	† SGS	
	HCF4021B	SGS	
	HEF4021B	Signetics	
	CM4021A	† Solitron	
	CM4021AE	Solitron	125
	883C4021B	† SSS	
	BCL4021B	SSS	
	SCL4021B	SSS	
	TC4021B	**Toshiba** (1363)	
8-Bit Bidirectional Parallel/Serial Input/Output Bus Register			
4XXX	F4034BC	Fairchild	130
	F4034BM	† Fairchild	
	MC14034BA	† **Motorola** (1128)	
	MC14034BC	**Motorola** (1128)	
	CD4034BC	National	
	CD4034BM	† National	135
	CD4034A	† **RCA** (704,1147)	
	CD4034AE	**RCA** (704,1147)	
	CD4034B	† **RCA** (704,1147)	
	CD4034BE	**RCA** (704,1147)	
	HCC4034B	† SGS	140
	HCF4034B	SGS	
	CM4034A	† Solitron	
	CM4034AE	Solitron	
	883C4034B	† SSS	
	BCL4034B	SSS	145
	SCL4034B	SSS	
	TC4034B	**Toshiba** (1363)	
8-Bit Bidirectional Universal			
HC	**74HC198**	**Signetics** (1157)	
HCT	**74HCT198**	**Signetics** (1157)	
8-Bit Bus Register, Shift and Store			
HC	**CD54HC4094**	**RCA** (1149)	150
	CD74HC4094	**RCA** (1149)	
	74HC4094	**Signetics** (1161)	
	TC74HC4094	**Toshiba** (1363)	
HCT	**CD54HCT4094**	† **RCA** (1149)	
	CD74HCT4094	**RCA** (1149)	155
	74HCT4094	**Signetics** (1161)	
4XXX	**MC14094BA**	† **Motorola** (1129)	
	MC14094BC	**Motorola** (1129)	
	CD4094B	† RCA	
	CD4094BE	RCA	160
	HCC4094B	† SGS	
	HCF4094B	SGS	
	HEF4094B	Signetics	
	883C4094B	† SSS	
	BCL4094B	SSS	165
	SCL4094B	SSS	
	TC4094B	**Toshiba** (1363)	
40HXXX	LR40H194	Sharp	
	TC40H194	**Toshiba** (1363)	
8-Bit Parallel In/Serial Out			
AHCT	**KS74AHCT165**	**Samsung** (1153)	170
C	MM54C165	† National	
	MM74C165	National	
HC	54HC165	† Fairchild	
	74HC165	Fairchild	
	GD74HC165	**Goldstar** (1066)	175
	HD74HC165	Hitachi	
	M74HC165	Mitsubishi	
	MC54HC165	† **Motorola** (1128)	
	MC74HC165	**Motorola** (1128)	
	MM54HC165	† National	180
	MM74HC165	National	
	CD54HC165	† **RCA** (1149)	
	CD74HC165	**RCA** (1149)	
	SP74HC165	SPI	
	M74HC165	SGS	185
	LR74HC165	Sharp	
	74HC165	**Signetics** (1157)	
	74HC166	**Signetics** (1157)	
	SN54HC165	† **TI** (714)	
	SN74HC165	TI	190
	TC74HC165	**Toshiba** (1363)	
	US74HC165	Universal	
HCT	**GD74HCT165**	**Goldstar** (1066)	
	CD54HCT165	† **RCA** (1149)	
	CD74HCT165	RCA	195
		(Continued)	

† Military Temperature Range (−55° to 125°C)

* Typical Value

Bold face indicates additional data is provided on the page noted.

DIGITAL-CMOS (Cont'd)

Shift Registers (Cont'd)

Function	Device	Source	Line
8-Bit Parallel In/Serial Out			
HC (Cont'd)	MM74HC165	National	
	CD54HC165	**† RCA (1149)**	
	CD74HC165	**RCA (1149)**	
	SP74HC165	SPI	
	M74HC165	SGS	5
	LR74HC165	Sharp	
	74HC165	**Signetics (1157)**	
	74HC166	**Signetics (1157)**	
	SN54HC165	**† TI (714)**	
	SN74HC165	TI	10
	TC74HC165	**Toshiba (1363)**	
	US74HC165	Universal	
HCT	**GD74HCT165**	**Goldstar (1066)**	
	CD54HCT165	**† RCA (1149)**	
	CD74HCT165	RCA	15
	KS74HCTLS165	**Samsung (1153)**	
	74HCT165	**Signetics (1157)**	
	74HCT166	**Signetics (1157)**	
	ZX54HCT/LS165	† Zytrex	
	ZX74HCT/LS165	Zytrex	20
40HXXX	**TC40H166**	**Toshiba (1363)**	
8-Bit Parallel-In, Serial-Out Register with Input Latches			
HC	MM54HC597	† National	
	MM74HC597	National	
	CD54HC597	**† RCA (1149)**	
	CD74HC597	**RCA (1149)**	25
	74HC597	**Signetics (1159)**	
	SN54HC598	**† TI (714)**	
	US74HC597	Universal	
HCT	**CD54HCT597**	**† RCA (1149)**	
	CD74HCT597	**RCA (1149)**	30
	74HCT597	**Signetics (1159)**	
8-Bit Serial In/Parallel Out			
AHCT	**KS74AHCT164**	**Samsung (1153)**	
C	MM54C164	† National	
	MM74C164	National	
HC	54HC164	† Fairchild	35
	74HC164	Fairchild	
	GD74HC164	**Goldstar (1066)**	
	HD74HC164	Hitachi	
	M74HC164	Mitsubishi	
	MC54HC164	**† Motorola (1128)**	40
	MC74HC164	**Motorola (1128)**	
	MM54HC164	† National	
	MM74HC164	National	
	CD54HC164	**† RCA (1149)**	
	CD74HC164	**RCA (1149)**	45
	SP74HC164	SPI	
	M74HC164	SGS	
	LR74HC164	Sharp	
	74HC164	**Signetics (1157)**	
	SN54HC164	**† TI (714)**	50
	SN74HC164	TI	
	TC74HC164	**Toshiba (1363)**	
	US74HC164	Universal	
HCT	**GD74HCT164**	**Goldstar (1066)**	
	74HCTR164	MicroTech	55
	MM54HCT164	† National	
	MM74HCT164	National	
	CD54HCT164	**† RCA (1149)**	
	CD74HCT164	RCA	
	KS74HCTLS164	**Samsung (1153)**	60
	74HCT164	**Signetics (1157)**	
	US74HCT164	Universal	
	ZX54HCT/LS164	† Zytrex	
	ZX74HCT/LS164	Zytrex	
40HXXX	LR40H164	Sharp	65
	TC40H164	**Toshiba (1363)**	

Function	Device	Source	Line
8-Bit, Serial In, Serial Out			
HC	HD74HC91	Hitachi	
8-Bit Serial/Parallel-In, Serial Out			
AHCT	**KS74AHCT166**	**Samsung (1153)**	
HC	**GD74HC322**	**Goldstar (1066)**	
	HD74HC166	Hitachi	70
	M74HC166	Mitsubishi	
	MC54HC166	† Motorola	
	MC74HC166	Motorola	
	MM54HC166	† National	
	MM74HC166	National	75
	CD54HC166	**† RCA (1149)**	
	CD74HC166	**RCA (1149)**	
	M74HC166	SGS	
	SN54HC166	**† TI (714)**	
	SN74HC166	TI	80
	SN74HC322	TI	
	TC74HC166	**Toshiba (1363)**	
HCT	74HCTR166	MicroTech	
	MC54HCT166	Motorola	
	MC74HCT166	Motorola	85
	MM54HCT166	† National	
	MM74HCT166	National	
	CD54HCT166	**† RCA (1149)**	
	CD74HCT166	**RCA (1149)**	
	KS74HCTLS166	**Samsung (1153)**	90
8-Bit Serial/Parallel-In, Serial-Out Register with Input Latches			
HC	HD74HC597	Hitachi	
	MC54HC597	† Motorola	
	MC74HC597	Motorola	
	M74HC597	SGS	
	SN54HC597	**† TI (714)**	95
	TC74HC597	**Toshiba (1363)**	
8-Bit Serial-In, Parallel-Out Register with Output Latches			
HC	HD74HC323	Hitachi	
	HD74HC595	Hitachi	
	M74HC595	Mitsubishi	
	MC54HC595	† Motorola	100
	MC74HC595	Motorola	
	MM54HC595	† National	
	MM74HC595	National	
	M74HC595	SGS	
	SN54HC595	**† TI (714)**	105
	SN74HC323	TI	
	SN74HC594	TI	
	SN74HC595	TI	
	TC74HC323	**Toshiba (1363)**	
	TC74HC595	**Toshiba (1363)**	110
	US74HC595	Universal	
HCT	US74HCT595	Universal	
8-Bit Synchronous Parallel In/Serial Out			
HC	HD74HC589	Hitachi	
	MC54HC589	† Motorola	
	MC74HC589	Motorola	115
	MM54HC589	† National	
	MM74HC589	National	
	SN74HC589	TI	
	US74HC589	Universal	
HCT	US74HCT589	Universal	120
4XXX	F4014BC	Fairchild	
	F4014BM	† Fairchild	
	MC14014BA	**† Motorola (1128)**	
	MC14014BC	**Motorola (1128)**	
	CD4014A	National	125
	CD4014BC	National	
	CD4014BM	† National	
	CD4014A	**† RCA (704)**	
	CD4014AE	**RCA (704)**	
	CD4014B	**† RCA (704)**	130
	CD4014BE	**RCA (704)**	
	HCC4014B	† SGS	
		(Continued)	

Function	Device	Source	Line
8-Bit Synchronous Parallel In/Serial Out			
4XXX (Cont'd)	HCF4014B	SGS	
	HEF4014B	Signetics	
	CM4014A	† Solitron	135
	CM4014AE	Solitron	
	883C4014B	† SSS	
	BCL4014B	SSS	
	SCL4014B	SSS	
	TC4014B	**Toshiba (1363)**	140
8-Bit, Three-State			
AC	**54AC299**	**† Fairchild (1011,1014)**	
	74AC299	**Fairchild (1014)**	
AHCT	**KS74AHCT299**	**† Samsung (1153)**	
FCT	IDT54FCT299	† IDT	
	IDT74FCT299	IDT	145
HC	54HC299	† Fairchild	
	74HC299	Fairchild	
	HD74HC299	Hitachi	
	IDT54AHCT299	† IDT	
	IDT74AHCT299	† IDT	150
	M74HC299	† Mitsubishi	
	MC54HC299	**† Motorola (1129)**	
	MC74HC299	**Motorola (1129)**	
	MM54HC299	† National	
	MM74HC299	National	155
	CD54HC299	**† RCA (1149)**	
	CD74HC299	**RCA (1149)**	
	M74HC299	SGS	
	74HC299	**Signetics (1158)**	
	SN74HC299	TI	160
	TC74HC299	**Toshiba (1363)**	
	US74HC299	Universal	
HCT	MM54HCT299	† National	
	MM74HCT299	National	
	CD54HCT299	**† RCA (1149)**	165
	CD74HCT299	**RCA (1149)**	
	KS74HCTLS299	**† Samsung (1153)**	
	74HCT299	**Signetics (1158)**	
8-Bit, Three-State, Synchronous Clear			
HC	MM54HC245	† National	
	MM54HC323	† National	170
	MM74HC245	National	
	MM74HC323	National	
16-Bit Serial In/Parallel Out			
HC	HD74HC674	Hitachi	
	SN74HC674	TI	
16-Bit Serial In/Parallel Out with Stored Parallel Output			
HC	HD74HC673	Hitachi	175
	SN74HC673	TI	
18-Bit Static (4, 5, 8, 9, 10, 12, 13, 14, 16, 17, 18-bits)			
4XXX	F4006BC	Fairchild	
	F4006BM	† Fairchild	
	MC14006BA	**† Motorola (1128)**	
	MC14006BC	**Motorola (1128)**	180
	CD4006A	National	
	CD4006BC	National	
	CD4006BM	† National	
	CD4006A	**† RCA (704)**	
	CD4006AE	**RCA (704)**	185
	CD4006B	**† RCA (704)**	
	CD4006BE	**RCA (704)**	
	HCC4006B	† SGS	
	HCF4006B	SGS	
	HEF4006B	Signetics	190
	CM4006A	† Solitron	
	CM4006AD	Solitron	
	CM4006AE	Solitron	
	883C4006B	† SSS	
	BCL4006B	SSS	195
		(Continued)	

† Military Temperature Range (−55° to 125°C)

* Typical Value

Bold face indicates additional data is provided on the page noted.

DIGITAL-CMOS (Cont'd)

Function	Device	Source	Line
Shift Registers (Cont'd)			
18-Bit Static (4, 5, 8, 9, 10, 12, 13, 14, 16, 17, 18-bits)			
4XXX		(Cont'd)	
	SCL4006B	SSS	
	TC4006B	**Toshiba** (1363)	
30-Bit Static			
4XXX	MD4330B	† Mitel	
	MV4330	Plessey	
32-Bit Bidirectional Serial In/Serial Out			
4XXX	CD40100B	† RCA	5
	CD40100BE	RCA	
	HCC40100B	† SGS	
	HCF40100B	SGS	
32-Bit Serial In/Parallel Out			
4XXX	MD4332B	† Mitel	
	MV4332	Plessey	10
64-Bit Static	MS612	RTC	
4XXX	F4031BC	Fairchild	
	F4031BM	† Fairchild	
	CD4031BC	National	
	CD4031BM	† National	15
	CD4031A	† **RCA** (704)	
	CD4031AE	**RCA** (704)	
	CD4031B	† **RCA** (704)	
	CD4031BE	**RCA** (704)	
	HCC4031B	† SGS	20
	HCF4031B	SGS	
	HEF4031B	Signetics	
64-Bit Variable Length			
4XXX	F4557BC	† Fairchild	
	F4557BM	Fairchild	
	MC14557BA	† **Motorola** (1128)	25
	MC14557BC	**Motorola** (1128)	
	HEF4557B	Signetics	
96-Bit Variable Length Elastic			
	MS618	† RTC	
128-Bit Static with Control Logic			
	MS625	† RTC	
128-Bit Static (16-bit increments)			
4XXX	**MC14562BA**	† **Motorola** (1129)	30
	MC14562BC	**Motorola** (1129)	
Translators			
HNIL/HTL is suitable for translation/input protection. See HNIL/HTL section			
Quad Level Shifter (low to high voltage)			
4XXX	**CD40109B**	† **RCA** (704,1145)	
	CD40109BE	**RCA** (704,1145)	
	HCC40109B	† SGS	35
	HCF40109B	SGS	
Quad Voltage Up Level Translator			
4XXX	F4104BE	Fairchild	
	F4104BM	† Fairchild	
	HEF4104B	Signetics	
Hex Level Shifter (CMOS or TTL to CMOS)			
4XXX	**MC14504BA**	† **Motorola** (1123,1124)	40
	MC14504BC	**Motorola** (1123,1124)	
Hex Level Shifter (low-to-high voltage)			
5XXX	TC5020B	Toshiba	
Octal Bidirectional Level Shifter (CMOS/TTL)			
	HS3374RH	**Harris** (632)	
4XXX	**CD40116**	**RCA** (1145)	
	CD40115	**RCA** (1145)	45
Miscellaneous			
Microprocessor, 1-Bit, Industrial Control Unit			
4XXX	MC14500B	Motorola	

Function	Device	Source	Line
Addressable Asynchronous Receiver/Transmitter			
4XXX	**MC14469**	**Motorola** (3632)	
ARINC 429 Single Channel Serial to Parallel Decoder			
	MT70003	MCE	
ARINC 429 Dual Channel Parallel to Serial Decoder			
	MT70014	MCE	
ARINC 429 Eight Channel Serial to Parallel Decoder			
	MT34009	MCE	50
Asynchronous Serial Manchester Adapter			
	HD6408-9	**Harris** (1624)	
Bit Rate Generator			
4XXX	F4702BC	Fairchild	
	F4702BM	† Fairchild	
	HD4702-2	† **Harris** (1624)	
	MC14411	**Motorola** (3633)	55
Code Identification System			
	HD15530-2	† **Harris** (1625,1631,4029,4654)	
	HD15530-9	**Harris** (1625,1631,4029,4654)	
	HD15531-2	† **Harris** (1625)	
	HD15531-9	**Harris** (1625)	
Comparator, Linear, Dual with Dual Op Amp			
4XXX	MC14574	Motorola	60
Comparator, Linear, Dual with Quad Op Amp			
4XXX	MC14573	Motorola	
Comparator, Linear, Quad			
C	MM54C909	† National	
	MM74C909	National	
4XXX	MC14575	Motorola	
Comparator Phase			
C	MM74C932	National	65
Direction Discriminator			
HCT	SN74HCT2000	TI	
Encoder			
40HXXX	**TC40H147**	**Toshiba** (1363)	
	TC40H148	**Toshiba** (1363)	
FIFO Memory, 512 Bit			
	MT003	MCE	
FIFO, 16x4			
HC	54HC4703	† Fairchild	70
	74HC4703	Fairchild	
Filter, Finite Impulse Response with Data Memory			
Controller	CA128X16	Calmos	
FIR Filter Module, Systolic (10-bit)			
	TMC2243	TRW-LSI	
Floating Point Multiplier (32/34-bit)			
	TMC3201	TRW-LSI	
Heart Rate Monitor			
	HLSS0533	Hughes	75
Local Network Terminal Controller			
	MT006	MCE	
Low voltage CMOS devices (Counters, Display Drivers, Counter-Timers) not usually mixed with 5-20v CMOS logic are listed under Digital-Special or CMOS-Oscillators/Dividers			
Multilevel Pipeline Register			
	L29C520C	LogicDev	
	L29C520M	† LogicDev	
	L29C521C	LogicDev	80
	L29C521M	† LogicDev	
	LPR520C	† LogicDev	
	LPR520M	† LogicDev	
	LPR521C	† LogicDev	
	LPR521M	† LogicDev	85
Octal Bus Transceiver with Parity, Three-State			
HC	MC54HC658	† Motorola	
	MC54HC659	† Motorola	
	MC74HC658	Motorola	
	MC74HC659	Motorola	
		(Continued)	

Function	Device	Source	Line
Octal Bus Transceiver with Parity, Three-State			
		(Cont'd)	
HCT	MC54HCT658	† Motorola	90
	MC54HCT659	† Motorola	
	MC74HCT658	Motorola	
	MC74HCT659	Motorola	
Octal Bus Transceiver with Status Flag, Inverting			
HC	MC54HC551	† Motorola	
	MC74HC551	Motorola	95
HCT	MC54HCT551	† Motorola	
	MC74HCT551	Motorola	
Octal Bus Transceiver with Status Flag, Non-Inverting			
HC	MC54HC550	† Motorola	
	MC74HC550	Motorola	
HCT	MC54HCT550	† Motorola	100
	MC74HCT550	Motorola	
Phase-Locked Loop			
HC	MC54HC4046A	† Motorola	
	MC74HC4046A	Motorola	
	MM54HC4046	† National	
	MM74HC4046	National	105
	CD54HC4046	† **RCA** (1150)	
	CD74HC4046	**RCA** (1150)	
	74HC4046	Signetics	
HCT	**CD54HCT4046**	† **RCA** (1150)	
	CD74HCT4046	**RCA** (1150)	110
	74HCT4046	**Signetics** (1160)	
4XXX	F4046BC	Fairchild	
	F4046BM	† Fairchild	
	MC14046BA	† Motorola	
	MC14046BC	Motorola	115
	CD4046BC	National	
	CD4046BM	† National	
	CD4046A	† **RCA** (1147)	
	CD4046AE	**RCA** (1147)	
	CD4046B	† **RCA** (1147)	120
	CD4046BE	**RCA** (1147)	
	HCC4046B	† SGS	
	HCF4046B	SGS	
	HEF4046B	Signetics	
	883C4046B	† SSS	125
	883C4446B	† SSS	
	BCL4046B	SSS	
	BCL4446B	SSS	
	SCL4046B	SSS	
	SCL4446B	SSS	130
Pipeline Register, Four 8-Bit			
HCT	SN74THCT9520	TI	
	SN74THCT9521	TI	
Programmable Digital Delay Timer			
	LS7210	**LSIComp** (1099)	
Programmable Frequency Divider/Digital Timer			
HC	MC54HC292	† Motorola	
	MC54HC294	† Motorola	135
	MC74HC292	Motorola	
	MC74HC294	Motorola	
	MM54HC292	† National	
	MM54HC294	† National	
	MM74HC292	National	140
	MM74HC294	National	
	M74HC292	SGS	
	M74HC294	SGS	
Programmable Frequency Dividers/Timers			
HC	HD74HC292	Hitachi	
	HD74HC294	Hitachi	145
	TC74HC292	Toshiba	
	TC74HC294	Toshiba	

† Military Temperature Range (−55° to 125°C)

* Typical Value

Bold face indicates additional data is provided on the page noted.

DIGITAL-CMOS (Cont'd)

Miscellaneous (Cont'd)

Function	Device	Source	Line
Register File, 4x4, Three-State			
HC	**GD74HC670**	**Goldstar (1066)**	
	HD74HC670	Hitachi	
	SN54HC670	† **TI (714)**	
	SN74HC670	TI	
Remote Control Manchester Encoder/Decoder with programmable address encoding/decoding			
	DC7	Supertex	5
	ED11	Supertex	
	ED15	Supertex	
	ED5	Supertex	
	ED9	Supertex	
Remote Control Receiver/Transmitter Pair			
4XXX	MCC14457	Motorola	10
	MCC14458	Motorola	
Serial Manchester Encoder-Decoder			
	HD6409	**Harris (1625)**	
Successive Approximation Register			
C	MM54C905	† National	
	MM74C905	National	
4XXX	MC14559BA	† Motorola	15
	MC14559BC	Motorola	
Successive Approximation Register, Cascadable			
4XXX	**MC14549BA**	† **Motorola (3630)**	
	MC14549BC	**Motorola (3630)**	
Successive Approximation Register, 12-Bit			
HCT	SP74HCT504	SPI	
Successive Approximation Register, 8-Bit			
HCT	SP74HCT502	SPI	20
	SP74HCT503	SPI	
Rate Multiplier, Synchronous Decade			
HC	SP74HC167	SPI	
Synthesizers, see Linear-Phase Locked Loop Circuits			
Timer, Programmable			
HC	MC54HC9000	† Motorola	
	MC74HC9000	Motorola	25
Touch Switch	TC9130	Toshiba	
	TC9135	Toshiba	
Rate Multiplier, Binary			
4XXX	CD4089BC	National	
	CD4089BM	† National	
	CD4089B	† **RCA (1147)**	30
	CD4089BE	**RCA (1147)**	
	HCC4089B	† SGS	
	HCF4089B	SGS	
BCD Rate Multiplier			
4XXX	BCL4527B	SSS	
Rate Multiplier, BCD			
4XXX	**MC14527BA**	† **Motorola (1132)**	35
	MC14527BC	**Motorola (1132)**	
	CD4527BC	National	
	CD4527BM	† National	
	CD4527B	† **RCA (1147)**	
	CD4527BE	**RCA (1147)**	40
	HCC4527B	† SGS	
	HCF4527B	SGS	
	HEF4527B	Signetics	
	883C4527B	† SSS	
	SCL4527B	SSS	45
	TC4527B	**Toshiba (1363)**	
Dual Differential Line Driver			
	MM78C30	† National	
	MM88C30	National	
Dual D-Type Flip-Flop, 2-Input NAND/NOR Combination			
HC	SN74HC7074	TI	
Dual Schmitt Trigger			
4XXX	F4583BC	Fairchild	50
	F4583BM	† Fairchild	
	MC14583BA	† **Motorola (1125)**	
	MC14583BC	**Motorola (1125)**	
	TC4583B	**Toshiba (1363)**	
Dual 4-Bit Terminator			
4XXX	**CD40117B**	**RCA (1145)**	55
Dual 4-Channel Analog Multiplexer/Demultiplexer			
HC	54HC4052	† Fairchild	
	74HC4052	Fairchild	
	74HC4052	**Signetics (1160)**	
	TC74HC4052	**Toshiba (1363)**	
HCT	**74HCT4052**	**Signetics (1160)**	60
Dual 4-Input NAND Schmitt-Trigger			
AHCT	**KS74AHCT13**	**Samsung (1153)**	
Triple 2-Channel Analog Multiplexer/Demultiplexer			
HC	54HC4053	† Fairchild	
	74HC4053	Fairchild	
	M74HC4053	Mitsubishi	
	74HC4053	**Signetics (1160)**	65
	TC74HC4053	**Toshiba (1363)**	
HCT	**74HCT4053**	**Signetics (1160)**	
Quad Bus Transceiver, Three-State, Inverting			
HC	SP74HC242	SPI	
	TC74HC242	**Toshiba (1363)**	
Quad Bus Transceiver, Three-State, Non-Inverting			
HC	M74HC243	Mitsubishi	70
	MM54HC243	† National	
	MM74HC243	National	
	LR74HC243	Sharp	
	SN54HC243	† **TI (714)**	
	SN74HC243	TI	75
	TC74HC243	**Toshiba (1363)**	
HCT	SN74HCT243	TI	
Quad Bus Transceiver, Tridirectional			
HC	HD74HC442	Hitachi	
	HD74HC443	Hitachi	
	HD74HC444	Hitachi	80
Quad Bus Transceiver, Three-State, Inverting			
HC	54HC242	† Fairchild	
	74HC242	Fairchild	
	HD74HC242	Hitachi	
	M74HC242	Mitsubishi	
	MC54HC242	† **Motorola (1124)**	85
	MC74HC242	**Motorola (1124)**	
	MM54HC242	† National	
	MM74HC242	National	
	MN74HC242	Panasonic	
	CD54HC242	† **RCA (1149)**	90
	CD74HC242	**RCA (1149)**	
	M74HC242	SGS	
	M74HC243	SGS	
	LR74HC242	Sharp	
	74HC242	**Signetics (1158)**	95
	SS54HC242	† SSS	
	SS54HC243	† SSS	
	SS74HC242	SSS	
	SS74HC243	SSS	
	SN54HC242	† **TI (714)**	100
	SN74HC242	TI	
	US74HC242	Universal	
HCT	HD74HCT242	Hitachi	
	MIC74HCT242	Micrel	
	MIC74HCT243	Micrel	105
	CD54HCT242	† **RCA (1149)**	
	CD74HCT242	**RCA (1149)**	
	74HCT242	**Signetics (1158)**	
	SS54HCT242	† SSS	
	SS54HCT243	† SSS	110
	SS74HCT242	SSS	
		(Continued)	
Quad Bus Transceiver, Three-State, Inverting			
HCT		(Cont'd)	
	SS74HCT243	SSS	
	54HCT242	† Supertex	
	74HCT242	Supertex	
	SN74HCT242	TI	115
SC	74SC242	Supertex	
Quad Bus Transceiver, Three-State, Non-Inverting			
HC	54HC243	† Fairchild	
	74HC243	Fairchild	
	HD74HC243	Hitachi	
	MC54HC243	† **Motorola (1124)**	120
	MC74HC243	**Motorola (1124)**	
	MN74HC243	Panasonic	
	CD54HC243	† **RCA (1149)**	
	CD74HC243	**RCA (1149)**	
	SP74HC243	SPI	125
	74HC243	**Signetics (1158)**	
	SN54HC126	† **TI (714)**	
	US74HC243	Universal	
HCT	HD74HCT243	Hitachi	
	CD54HCT243	† RCA	130
	CD74HCT243	RCA	
	74HCT243	**Signetics (1158)**	
	54HCT243	† Supertex	
	74HCT243	Supertex	
	US74HCT243	Universal	135
SC	74SC243	Supertex	
Quad Precision Timer/Driver (inputs cause outputs to switch state for 100 clock pulses)			
4XXX	MC14415	Motorola	
	MC14415E	† Motorola	
Quad Single Ended Line Driver			
	MM78C29	† National	
	MM88C29	National	140
Quad 2-Input NAND Schmitt Trigger			
HC	54HC132	† Fairchild	
	74HC132	Fairchild	
	GD74HC132	**Goldstar (1066)**	
	HD74HC132	Hitachi	
	M74HC132	Mitsubishi	145
	MC54HC132	† **Motorola (1125)**	
	MC74HC132	**Motorola (1125)**	
	MM54HC132	† National	
	MM74HC132	National	
	CD54HC132	† **RCA (1149)**	150
	CD74HC132	**RCA (1149)**	
	SP74HC132	SPI	
	M74HC132	SGS	
	LR74HC132	Sharp	
	74HC132	**Signetics (1157)**	155
	SN74HC132	TI	
	TC74HC132	**Toshiba (1363)**	
HCT	**CD54HCT132**	† **RCA (1149)**	
	CD74HCT132	**RCA (1149)**	
	KS74HCTLS132	**Samsung (1153)**	160
	74HCT132	**Signetics (1157)**	
4XXX	F4093BC	† Fairchild	
	F4093BM	Fairchild	
	MC14093BA	† **Motorola (1125)**	
	MC14093BC	**Motorola (1125)**	165
	CD4093BC	National	
	CD4093BM	† National	
	MN4093B	† Panasonic	
	CD4093B	† **RCA (704,1145)**	
	CD4093BE	**RCA (704,1145)**	170
	HCC4093B	† SGS	
	HCF4093B	SGS	
	HEF4093B	Signetics	
	883C4093B	† SSS	
	BCL4093B	SSS	175
		(Continued)	

† Military Temperature Range (−55° to 125°C)

* Typical Value

Bold face indicates additional data is provided on the page noted.

DIGITAL–CMOS (Cont'd)

Function	Device	Source	Line
Miscellaneous (Cont'd)			
Quad 2-Input NAND Schmitt Trigger			
4XXX (Cont'd)			
	SCL4093B	SSS	
	TC4093B	**Toshiba (1363)**	
Hex Bus Driver, Three-State, Non-Inverting			
AHCT	**KS74AHCT367**	**Samsung (1153)**	
HC	M74HC367	Mitsubishi	
	SN54HC367	**† TI (714)**	5
	SN74HC367	TI	
Hex Contact Bounce Eliminator			
4XXX	MC14490	Motorola	
	MC14490E	† Motorola	
Hex Schmitt Trigger			
	TC584B	Toshiba	
AC	**54AC14**	**† Fairchild (1011,1013)**	10
	74AC14	**Fairchild (1011,1013)**	
C	MM54C14	† National	
	MM54C914	† National	
	MM74C14	National	
	MM74C914	National	15
HC	**GD74HC14**	**Goldstar (1066)**	
	HD74HC14	Hitachi	
	M74HC14	Mitsubishi	
	MC54HC14	**† Motorola (1125)**	
	MC74HC14	**Motorola (1125)**	20
	MN74HC14	Panasonic	
	CD54HC14	**† RCA (1149)**	
	CD74HC14	**RCA (1149)**	
	SP74HC14	SPI	
	M74HC14	SGS	25
	LR74HC14	Sharp	
	74HC14	**Signetics (1156)**	
	SN54HC14	**† TI (714)**	
	SN74HC14	TI	
	US74HC14	Universal	30
HCT	**GD74HCT14**	**Goldstar (1066)**	
	74HCTR14	MicroTech	
	CD54HCT14	**† RCA (1149)**	
	CD74HCT14	**RCA (1149)**	
	74HCT14	**Signetics (1156)**	35
	US74HCT14	Universal	
4XXX	F40014AM	† Fairchild	
	F40014BC	Fairchild	
	MC14584BA	**† Motorola (1125)**	
	MC14584BC	**Motorola (1125)**	40
	CD40106BC	National	
	CD40106BM	† National	
	CD4584BC	National	
	CD4584BM	† National	
	CD40106B	**† RCA (704,1145)**	45
	CD40106BE	**RCA (704,1145)**	
	HCC40106B	† SGS	
	HCF40106B	SGS	
	HEF40106B	Signetics	
	883C4584B	† SSS	50
	BCL4584B	SSS	
	SCL4584B	SSS	
Hex Schmitt Trigger Inverter			
HC	MM54HC14	† National	
	MM74HC14	National	
Octal Bus Driver and Register			
HC	SN74HC7340	TI	55
Octal Bus Driver, Inverting, Three-State			
AC	**54AC240**	**† Fairchild (1011,1014)**	
	74AC240	**Fairchild (1011,1014)**	
(Continued)			

Function	Device	Source	Line
Octal Bus Driver, Inverting, Three-State (Cont'd)			
ACT	**54ACT240**	**† Fairchild (1012,1014)**	
	74ACT240	**Fairchild (1012,1014)**	
	V54ACT240	**VTC (1367,1370)**	60
	V54ACT540	**† VTC (1367,1370)**	
	V74ACT240	**VTC (1367,1370)**	
	V74ACT540	**VTC (1367,1370)**	
AHCT	**KS74AHCT210**	**Samsung (1153)**	
	KS74AHCT240	**Samsung (1153)**	65
C	MM54C240	† National	
	MM74C240	National	
FCT	74HC240	IDT	
	IDT54FCT240	† IDT	
	IDT74FCT240	IDT	70
HC	54HC240	† Fairchild	
	74HC240	Fairchild	
	GD74HC240	**Goldstar (1066)**	
	HD74HC240	Hitachi	
	IDT54AHCT240	† IDT	75
	IDT74AHCT240	IDT	
	MC54HC240	**† Motorola (1124)**	
	MC74HC240	**Motorola (1124)**	
	MM54HC240	† National	
	MM74HC240	National	80
	MN74HC240	Panasonic	
	CD54HC240	**† RCA (1149)**	
	CD74HC240	**RCA (1149)**	
	74HC240	Samsung	
	SP74HC240	SPI	85
	M74HC240	SGS	
	LR74HC240	Sharp	
	54HC240	Signetics	
	74HC240	**Signetics (1157)**	
	SS54HC240	† SSS	90
	SS74HC240	SSS	
	SN54HC240	**† TI (714)**	
	SN74HC240	TI	
	TC74HC240	**Toshiba (1363)**	
	US74HC240	Universal	95
HCT	54HCT240	† CTI	
	74HCT240	CTI	
	GD74HCT240	**Goldstar (1066)**	
	HD74HCT240	Hitachi	
	MIC74HCT240	Micrel	100
	74HCTR240	MicroTech	
	MD54HCT240R	† Mitel	
	MD74HCT240R	Mitel	
	M74HC240	Mitsubishi	
	MC54HCT240	† Motorola	105
	MC74HCT240	Motorola	
	MM54HCT240	† National	
	MM74HCT240	National	
	MV74HCT240	Plessey	
	CD54HCT240	**† RCA (1149)**	110
	CD74HCT240	**RCA (1149)**	
	74HCT240	Samsung	
	KS74HCTLS210	**Samsung (1153)**	
	KS74HCTLS240	**Samsung (1153)**	
	SP74HCT240	SPI	115
	M74HCT240	SGS	
	54HCT240	Signetics	
	74HCT240	**Signetics (1157)**	
	SS54HCT240	† SSS	
	SS74HCT240	SSS	120
	54HCT240	† Supertex	
	74HCT240	Supertex	
	SN54HCT240	**† TI (714)**	
	SN54HCT540	**† TI (714)**	
	SN74HCT240	TI	125
	SN74HCT540	TI	
(Continued)			

Function	Device	Source	Line
Octal Bus Driver, Inverting, Three-State			
HCT (Cont'd)			
	TC74HCT240	**Toshiba (1363)**	
	US74HCT240	Universal	
	ZX54HCT/LS210	† Zytrex	
	ZX54HCT/LS240	† Zytrex	130
	ZX74HCT/LS210	Zytrex	
	ZX74HCT/LS240	Zytrex	
SC	G74SC240	GTEMicro	
	SP74SC240	SPI	
	74SC240	Supertex	135
4XXX	HEF40240B	Signetics	
40HXXX	LR40H240	Sharp	
	TC40H240	**Toshiba (1363)**	
Octal Bus Driver, Non-Inverting, Three-State, Complementary Controls			
AC	**54AC241**	**† Fairchild (1011,1014)**	
	74AC241	**Fairchild (1011,1014)**	140
ACT	**54ACT241**	**† Fairchild (1012,1014)**	
	74ACT241	**Fairchild (1012,1014)**	
FCT	74HC244	IDT	
	IDT54FCT244	† IDT	
	IDT74AHCT244	IDT	145
	IDT74FCT244	IDT	
HC	54HC241	† Fairchild	
	74HC241	Fairchild	
	GD74HC241	**Goldstar (1066)**	
	HD74HC241	Hitachi	150
	IDT54AHCT244	† IDT	
	MC54HC241	**† Motorola (1124)**	
	MC74HC241	**Motorola (1124)**	
	MM74HC241	National	
	MN74HC241	Panasonic	155
	CD54HC241	**† RCA (1149)**	
	CD74HC241	**RCA (1149)**	
	74HC241	Samsung	
	SP74HC241	SPI	
	M74HC241	SGS	160
	54HC241	Signetics	
	74HC241	**Signetics (1157)**	
	SS54HC241	† SSS	
	SS74HC241	SSS	
	TC74HC244	TeledyneS	165
	IDT74AHCT244	TI	
	SN54HC244	**† TI (714)**	
	SN74HC244	TI	
	TC74HC241	**Toshiba (1363)**	
	US74HC241	Universal	170
	US74HC244	Universal	
HCT	54HCT241	† CTI	
	54HCT244	† CTI	
	74HCT241	CTI	
	74HCT244	CTI	175
	GD74HCT241	**Goldstar (1066)**	
	HD74HCT241	Hitachi	
	HD74HCT244	Hitachi	
	MIC74HCT241	Micrel	
	MIC74HCT244	Micrel	180
	74HCTR241	MicroTech	
	74HCTR244	MicroTech	
	MD54HCT241R	† Mitel	
	MD54HCT244R	† Mitel	
	MD74HCT241R	Mitel	185
	MD74HCT244R	Mitel	
	M74HC244	Mitsubishi	
	MC54HCT241	† Motorola	
	MC54HCT244	† Motorola	
	MC74HCT241	Motorola	190
(Continued)			

† Military Temperature Range (−55° to 125°C)

* Typical Value

Bold face indicates additional data is provided on the page noted.

DIGITAL-CMOS (Cont'd)

Miscellaneous (Cont'd)

Function	Device	Source	Line
Octal Bus Driver, Non-Inverting, Three-State, Complementary Controls			
HCT		(Cont'd)	
	MC74HCT244	Motorola	
	MM54HCT244	† National	
	MM74HCT244	National	
	MV74HCT241	Plessey	
	MV74HCT244	Plessey	5
	CD54HCT241	† **RCA (1149)**	
	CD54HCT244	† **RCA (1149)**	
	CD74HCT241	**RCA (1149)**	
	CD74HCT244	**RCA (1149)**	
	74HCT241	Samsung	10
	74HCT244	Samsung	
	KS74HCTLS241	**Samsung (1153)**	
	SP74HCT241	SPI	
	SP74HCT244	SPI	
	M74HCT241	SGS	15
	M74HCT244	SGS	
	54HCT241	Signetics	
	54HCT244	Signetics	
	74HCT241	**Signetics (1157)**	
	74HCT244	**Signetics (1158)**	20
	SS54HCT241	† SSS	
	SS54HCT244	† SSS	
	SS74HCT241	SSS	
	SS74HCT244	SSS	
	54HCT241	† Supertex	25
	54HCT244	† Supertex	
	74HCT241	Supertex	
	74HCT244	Supertex	
	TMD74HCT244	Telmos	
	SN74HCT244	TI	30
	TC74HCT244	**Toshiba (1363)**	
	US74HCT244	Universal	
	ZX54HCT/LS241	† Zytrex	
	ZX54HCT/LS244	† Zytrex	
	ZX54HCT241	† Zytrex	35
	ZX74HCT/LS241	Zytrex	
	ZX74HCT/LS244	Zytrex	
SC	G74SC241	GTEMicro	
	G74SC244	GTEMicro	
	SP74SC241	SPI	40
	SP74SC244	SPI	
	74SC241	Supertex	
	74SC244	Supertex	
4XXX	HEF40244B	Signetics	
40HXXX	**TC40H241**	**Toshiba (1363)**	45
	TC40H244	**Toshiba (1363)**	
Octal Bus Driver, Non-Inverting, Three-State, Symmetrical Controls			
ACT	**V54ACT241**	† **VTC (1367,1370)**	
	V74ACT241	**VTC (1367,1370)**	
AHCT	**KS74AHCT241**	**Samsung (1153)**	
HC	LR74HC241	Sharp	50
	SN54HC241	† **TI (714)**	
	SN74HC241	TI	
HCT	M74HC241	Mitsubishi	
	MM54HCT241	† National	
	MM74HCT241	National	55
	SN54HCT241	† **TI (714)**	
	SN74HCT241	TI	
	TC74HCT241	**Toshiba (1363)**	
	US74HCT241	Universal	
Octal/Bus Driver, Non-Inverting, Three-State, Complementary Controls			
AC	**54AC244**	† **Fairchild**	
		(1011,1014)	60
	74AC244	**Fairchild**	
		(1011,1014)	
		(Continued)	
Octal/Bus Driver, Non-Inverting, Three-State, Complementary Controls		(Cont'd)	
ACT	**54ACT244**	† **Fairchild**	
		(1012,1014)	
	74ACT244	**Fairchild**	
		(1012,1014)	
	V54ACT244	† **VTC (1367,1370)**	
AHCT	**KS74AHCT244**	**Samsung (1153)**	65
C	MM54C244	National	
	MM74C244	National	
HC	54HC244	† Fairchild	
	74HC244	Fairchild	
	GD74HC244	**Goldstar (1066)**	70
	HD74HC244	Hitachi	
	MC54HC244	† **Motorola (1124)**	
	MC74HC244	**Motorola (1124)**	
	MM54HC244	† National	
	MM74HC244	National	75
	MN74HC244	Panasonic	
	CD54HC244	† **RCA (1149)**	
	CD74HC244	**RCA (1149)**	
	74HC244	Samsung	
	SP74HC244	SPI	80
	M74HC244	SGS	
	LR74HC244	Sharp	
	54HC244	Signetics	
	74HC244	**Signetics (1158)**	
	SS54HC244	† SSS	85
	SS74HC244	SSS	
HCT	**GD74HCT244**	**Goldstar (1066)**	
	KS74HCTLS244	**Samsung (1153)**	
	V74ACT244	**VTC (1367,1370)**	
Octal Bus Driver (schmitt trigger), Inverting, Three-State			
HCT	HD54HCT240	† Hitachi	90
Octal/Bus Driver (schmitt trigger), Non-Inverting, Three-State, Complementary Controls			
HC	**TC74HC244**	**Toshiba (1363)**	
Octal Bus Driver with Bidirectional Register			
HC	SN74HC7344	TI	
Octal Bus Transceiver			
HC	54HC645	† Fairchild	
	74HC645	Fairchild	
	SS54HC645	† SSS	95
	SS74HC645	SSS	
HCT	SS54HCT645	† SSS	
	SS74HCT645	SSS	
Octal Bus Transceiver and Register, Inverting, Three-State			
AC	**54AC648**	† **Fairchild**	
		(1012,1015)	
	74AC648	**Fairchild**	
		(1012,1015)	100
ACT	**54ACT648**	† **MMI (1112)**	
	54ACT651	† **MMI (1113)**	
	74ACT648	**MMI (1107,1112)**	
	74ACT651	**MMI (1107,1113)**	
AHCT	**KS74AHCT648**	**Samsung (1153)**	105
HC	54HC648	† Fairchild	
	74HC648	Fairchild	
	HD74HC648	Hitachi	
	HD74HC651	Hitachi	
	M74HC648	Mitsubishi	110
	MC54HC648	† **Motorola (1125)**	
	MC54HC651	† Motorola	
	MC74HC648	**Motorola (1125)**	
	MC74HC651	Motorola	
	MM54HC648	† National	115
	MM74HC648	National	
	CD54HC648	† **RCA (1149)**	
	CD74HC648	**RCA (1149)**	
	74HC648	Samsung	
	M74HC648	SGS	120
		(Continued)	
Octal Bus Transceiver and Register, Inverting, Three-State			
HC		(Cont'd)	
	74HC648	**Signetics (1159)**	
	SS54HC648	† SSS	
	SS74HC648	SSS	
	SN54HC648	† **TI (714)**	
	SN54HC651	† **TI (714)**	125
	SN74HC648	TI	
	SN74HC651	TI	
	TC74HC648	**Toshiba (1363)**	
	TC74HC651	**Toshiba (1363)**	
HCT	HD74HCT648	Hitachi	130
	HD74HCT651	Hitachi	
	MC54HCT651	Motorola	
	MC74HCT651	Motorola	
	CD54HCT648	† **RCA (1149)**	
	CD74HCT648	**RCA (1149)**	135
	KS74HCTLS648	**Samsung (1153)**	
	74HCT648	**Signetics (1159)**	
	SS54HCT648	† SSS	
	SS74HCT648	SSS	
	SN74HCT648	TI	140
	SN74HCT651	TI	
	TC74HCT648	**Toshiba (1363)**	
	TC74HCT651	**Toshiba (1363)**	
	US74HCT648	Universal	
	ZX74HCT/LS648	Zytrex	145
Octal Bus Transceiver and Register, Non-Inverting, Three-State			
AC	**54AC646**	† **Fairchild**	
		(1012,1015)	
	74AC646	**Fairchild**	
		(1012,1015)	
ACT	**54ACT646**	† **MMI (1112)**	
	54ACT652	† **MMI (1113)**	
	74ACT652	**MMI (1107,1113)**	150
AHCT	**KS74AHCT646**	**Samsung (1153)**	
HC	54HC646	† Fairchild	
	74HC646	Fairchild	
	HD74HC646	Hitachi	
	HD74HC652	Hitachi	155
	M74HC646	Mitsubishi	
	MC54HC646	† **Motorola (1125)**	
	MC54HC652	† Motorola	
	MC74HC646	**Motorola (1125)**	
	MC74HC652	Motorola	160
	MM54HC646	† National	
	MM74HC646	National	
	CD54HC646	† **RCA (1149)**	
	CD74HC646	**RCA (1149)**	
	74HC646	Samsung	165
	M74HC646	SGS	
	74HC646	**Signetics (1159)**	
	SS54HC646	† SSS	
	SS74HC646	SSS	
	SN54HC646	† **TI (714)**	170
	SN54HC652	† **TI (714)**	
	SN74HC646	TI	
	SN74HC652	TI	
	TC74HC646	**Toshiba (1363)**	
	TC74HC652	**Toshiba (1363)**	175
HCT	HD74HCT646	Hitachi	
	HD74HCT652	Hitachi	
	74ACT646	**MMI (1107)**	
	MC54HCT652	† Motorola	
	MC74HCT652	Motorola	180
	CD54HCT646	† **RCA (1149)**	
	CD74HCT646	**RCA (1149)**	
	KS74HCTLS646	**Samsung (1153)**	
	74HCT646	**Signetics (1159)**	
	SS54HCT646	† SSS	185
	SS74HCT646	SSS	
		(Continued)	

† Military Temperature Range (−55° to 125°C)

* Typical Value

Bold face indicates additional data is provided on the page noted.

DIGITAL–CMOS (Cont'd)

Function	Device	Source	Line
Miscellaneous (Cont'd)			
Octal Bus Transceiver and Register, Non-Inverting, Three-State			
HCT (Cont'd)			
	SN74HCT646	TI	
	SN74HCT652	TI	
	TC74HCT646	**Toshiba (1363)**	
	TC74HCT652	**Toshiba (1363)**	
	ZX74HCT/LS646	Zytrex	5
Octal Bus Transceiver, Inverting			
HC	54HC640	† Fairchild	
	74HC640	Fairchild	
	TC74HC640	**Toshiba (1363)**	
Octal Bus Transceiver, Inverting/Non-Inverting			
HC	54HC643	† Fairchild	
	74HC643	Fairchild	10
	TC74HC643	**Toshiba (1363)**	
Octal Bus Transceiver with Parity, Three-State			
HC	MC54HC664	† Motorola	
	MC54HC665	† Motorola	
	MC74HC664	Motorola	
	MC74HC665	Motorola	15
HCT	MC54HCT664	† Motorola	
	MC54HCT665	† Motorola	
	MC74HCT664	Motorola	
	MC74HCT665	Motorola	
Octal Bus Transceiver with Registers, Open-Collector			
HC	**74HC647**	**Signetics (1159)**	20
HCT	**74HCT647**	**Signetics (1159)**	
Octal Bus Transceiver with Storage, Three-State			
HC	HD74HC620	Hitachi	
	SN54HC620	† **TI (714)**	
	SN74HC620	TI	
	TC74HC620	**Toshiba (1363)**	25
Octal Bus Transceiver, Three-State			
ACT	**V54ACT620**	† **VTC (1367,1371)**	
	V54ACT623	† **VTC (1367,1371)**	
	V74ACT620	**VTC (1367,1371)**	
	V74ACT623	**VTC (1367,1371)**	
AHCT	**KS74AHCT640**	**Samsung (1153)**	30
FCT	74HC640	IDT	
	IDT54FCT640	† IDT	
	IDT74FCT640	IDT	
HC	IDT54AHCT640	† IDT	
	IDT74AHCT640	IDT	35
	MC54HC620	† Motorola	
	MC54HC623	† Motorola	
	MC54HC640	† **Motorola (1125)**	
	MC54HC643	† **Motorola (1125)**	
	MC74HC620	Motorola	40
	MC74HC623	Motorola	
	MC74HC640	**Motorola (1125)**	
	MC74HC643	**Motorola (1125)**	
	74HC640	Samsung	
	74HC643	Samsung	45
	M74HC643	SGS	
	LR74HC640	Sharp	
	SN54HC640	† **TI (714)**	
	SN74HC640	TI	
HCT	HD74HCT620	Hitachi	50
	HD74HCT623	Hitachi	
	M74HC640	Mitsubishi	
	MC54HCT620	† Motorola	
	MC54HCT623	† Motorola	
	MC74HCT620	Motorola	55
	MC74HCT623	Motorola	
	KS74HCTLS640	**Samsung (1153)**	
	KS74HCTLS643	**Samsung (1153)**	
	SN74HCT620	TI	
	SN74HCT623	TI	60
		(Continued)	
Octal Bus Transceiver, Three-State			
HCT (Cont'd)			
	TC74HCT640	**Toshiba (1363)**	
	US74HCT640	Universal	
Octal Bus Transceiver, Three-State, Inverting			
ACT	**V54ACT640**	† **VTC (1367,1371)**	
	V54ACT643	† **VTC (1367,1371)**	
	V74ACT640	**VTC (1367,1371)**	65
	V74ACT643	**VTC (1367,1371)**	
AHCT	**KS74AHCT643**	**Samsung (1153)**	
HC	HD74HC640	Hitachi	
	CD54HC640	† **RCA (1149)**	
	CD74HC640	**RCA (1149)**	70
	LR74HC643	Sharp	
	74HC640	**Signetics (1159)**	
	SS54HC640	† SSS	
	SS74HC640	SSS	
	SN54HC643	† **TI (714)**	75
	SN74HC643	TI	
	US74HC640	Universal	
HCT	HD74HCT640	Hitachi	
	74HCTR620	MicroTech	
	74HCTR640	MicroTech	80
	MC54HCT640	† Motorola	
	MC74HCT640	Motorola	
	MM54HCT640	† National	
	MM54HCT643	† National	
	MM74HCT640	National	85
	MM74HCT643	National	
	MV74HCT545	Plessey	
	CD54HCT640	† **RCA (1149)**	
	CD74HCT640	**RCA (1149)**	
	M74HCT640	SGS	90
	74HCT640	**Signetics (1159)**	
	SS54HCT640	† SSS	
	SS74HCT640	SSS	
	SN74HCT640	TI	
	SN74HCT643	TI	95
	TC74HCT643	**Toshiba (1363)**	
	US74HCT643	Universal	
	ZX54HCT/LS640	† Zytrex	
	ZX74HCT/LS640	Zytrex	
Octal Bus Transceiver, Three-State, Non-Inverting			
AC	**54AC245**	† **Fairchild (1011,1015)**	100
	74AC245	**Fairchild (1011,1015)**	
ACT	**54ACT245**	† **Fairchild (1012,1015)**	
	74ACT245	**Fairchild (1012,1015)**	
	V54ACT245	† **VTC (1368,1370,1371)**	
	V54ACT645	† **VTC (1367,1371)**	105
	V74ACT245	**VTC (1367,1368,1371)**	
	V74ACT645	**VTC (1367,1371)**	
AHCT	IDT54AHCT245	† IDT	
	KS74AHCT245	**Samsung (1153)**	
	KS74AHCT541	**Samsung (1153)**	110
FCT	74HC245	IDT	
	74HC645	IDT	
	IDT54FCT245	† IDT	
	IDT54FCT645	† IDT	
	IDT74FCT245	IDT	115
	IDT74FCT645	IDT	
HC	54HC245	† Fairchild	
	74HC245	Fairchild	
	GD74HC245	**Goldstar (1066)**	
	HD74HC245	Hitachi	120
	HD74HC623	Hitachi	
	54AHCT245	† IDT	
		(Continued)	
Octal Bus Transceiver, Three-State, Non-Inverting			
HC (Cont'd)			
	IDT54AHCT645	† IDT	
	IDT74AHCT245	IDT	
	IDT74AHCT645	IDT	125
	M74HC541	Mitsubishi	
	MC54HC245	† **Motorola (1124)**	
	MC74HC245	**Motorola (1124)**	
	MN74HC245	Panasonic	
	CD54HC245	† **RCA (1149)**	130
	CD74HC245	**RCA (1149)**	
	74HC245	Samsung	
	M74HC245	SGS	
	LR74HC245	Sharp	
	74HC245	**Signetics (1158)**	135
	SS54HC245	† SSS	
	SS74HC245	SSS	
	SN54HC245	† **TI (714)**	
	SN54HC541	† **TI (714)**	
	SN54HC623	† **TI (714)**	140
	SN54HC645	† **TI (714)**	
	SN74HC245	TI	
	SN74HC541	TI	
	SN74HC623	TI	
	SN74HC645	TI	145
	TC74HC245	**Toshiba (1363)**	
	TC74HC541	**Toshiba (1363)**	
	TC74HC623	**Toshiba (1363)**	
	US74HC245	Universal	
HCT	54HCT245	† CTI	150
	74HCT245	CTI	
	GD74HCT245	**Goldstar (1066)**	
	HD74HCT245	Hitachi	
	MIC74HCT245	Micrel	
	74HCTR245	MicroTech	155
	74HCTR623	† MicroTech	
	MD54HCT245R	† Mitel	
	MD74HCT245R	Mitel	
	M74HC245	Mitsubishi	
	MC54HCT245	† Motorola	160
	MC74HCT245	Motorola	
	MM54HCT245	† National	
	MM74HCT245	National	
	MV74HCT245	Plessey	
	CD54HCT245	† **RCA (1149)**	165
	CD74HCT245	**RCA (1149)**	
	74HCTLS245	Samsung	
	SP74HCT245	SPI	
	M74HCT245	SGS	
	74HCT245	**Signetics (1158)**	170
	SS54HCT245	† SSS	
	SS74HCT245	SSS	
	54HCT245	† Supertex	
	74HCT245	Supertex	
	SN54HCT245	† **TI (714)**	175
	SN74HCT245	TI	
	SN74HCT645	TI	
	TC74HCT245	**Toshiba (1363)**	
	TC74HCT541	**Toshiba (1363)**	
	US74HCT245	Universal	180
	ZX54HCT/LS245	† Zytrex	
	ZX54HCT245	† Zytrex	
	ZX74HCT/LS245	Zytrex	
SC	G74SC245	GTEMicro	
	SP74SC245	SPI	185
	74SC245	Supertex	
4XXX	HEF40245B	Signetics	
40HXXX	**TC40H245**	**Toshiba (1363)**	
Octal Bus Transceiver, Three-State, True/Inverting			
HC	HD74HC643	Hitachi	
	CD54HC643	† **RCA (1149)**	190
	CD74HC643	**RCA (1149)**	
		(Continued)	

† Military Temperature Range (−55° to 125°C)

* Typical Value

Bold face indicates additional data is provided on the page noted.

DIGITAL–CMOS (Cont'd)

Function	Device	Source	Line
Miscellaneous (Cont'd)			
Octal Bus Transceiver, Three-State, True/Inverting			
HC		(Cont'd)	
	74HC643	**Signetics (1159)**	
	SS54HC643	† SSS	
	SS74HC643	SSS	
	US74HC643	Universal	
HCT	HD74HCT643	Hitachi	5
	74HCTR643	MicroTech	
	MC54HCT643	† Motorola	
	MC74HCT643	Motorola	
	CD54HCT643	**† RCA (1149)**	
	CD74HCT643	**RCA (1149)**	10
	M74HCT643	SGS	
	74HCT643	**Signetics (1159)**	
	SS54HCT643	† SSS	
	SS74HCT643	SSS	
	ZX54HCT/LS643	† Zytrex	15
	ZX74HCT/LS643	Zytrex	
Octal D Register/Bus Transceiver			
HC	54HC543	† Fairchild	
	54HC544	† Fairchild	
	74HC543	Fairchild	
	74HC544	Fairchild	20
	MM54HC543	† National	
	MM54HC544	† National	
	MM74HC543	National	
	MM74HC544	National	
HCT	MM54HCT543	† National	25
	MM54HCT544	† National	
	MM74HCT543	National	
	MM74HCT544	National	
Octal, Inverting, Back-to-Back Configuration			
ACT	54ACT794	† MMI	
	74ACT794	MMI	30
Octal Register/Bus Transceiver			
	US74HC550	Universal	
	US74HC551	Universal	
	US74HCT550	Universal	
	US74HCT551	Universal	
HC	54HC550	† Fairchild	35
	54HC551	† Fairchild	
	74HC550	Fairchild	
	74HC551	Fairchild	
	74HC551	Fairchild	
	MM54HC550	† National	40
	MM54HC551	† National	
	MM74HC550	National	
	MM74HC551	National	
HCT	MM54HCT550	† National	
	MM54HCT551	† National	45
	MM74HCT550	National	
	MM74HCT551	National	
Octal Register/Bus Transceiver, Inverting			
HC	54HC648	† Fairchild	
	74HC648	Fairchild	
Three Port Register File (16 words x 9-bits)			
	TMC3200	TRW-LSI	50
2 of 8 Keyboard to Binary Encoder			
4XXX	**MC14419**	**Motorola (3633)**	
3-/4-Input NAND/NOR Combination			
HC	SN74HC7006	TI	
4-Bit Binary Counter/Clock Generator			
5XXX	TC5018B	Toshiba	
6-Section Multifunction (Inverter, NOR, Flip-Flop)			
	SN74HC7076	TI	
6-Section Multifunction (NAND, Invert, Flip-Flop)			
	SN74HC7075	TI	55
8/9-Bit Parity Check/Generator Bus Transceiver			
HC	SN74HC658	TI	
	SN74HC659	TI	
	SN74HC664	TI	
	SN74HC665	TI	
HCT	SN74HCT658	TI	60
	SN74HCT659	TI	
	SN74HCT664	TI	
	SN74HCT665	TI	
8-Bit I/O Port	HMMP1852	† Hughes	
	HMMP1852C	† Hughes	65
	CDP1852C	**† RCA (1673,1679)**	
	CDP1872C	**† RCA (1673,1679)**	
	CDP1874C	**† RCA (1673,1679)**	
	CDP1875C	**† RCA (1673,1678,1679)**	
HC	HCMP1852	Hughes	70
	HCMP1852C	Hughes	
8-Bit Priority Encoder			
4XXX	F4532BC	Fairchild	
	F4532BM	† Fairchild	
	MC14532BA	**† Motorola (1131)**	
	MC14532BC	**Motorola (1131)**	75
	CD4532B	**† RCA (704,1145)**	
	CD4532BE	**RCA (704,1145)**	
	HCC4532B	† SGS	
	HCF4532B	SGS	
	HEF4532B	Signetics	80
	883C4532B	† SSS	
	BCL4532B	SSS	
	SCL4532B	SSS	
	TC4532B	**Toshiba (1363)**	
8-Channel Analog Multiplexer/Demultiplexer			
HC	54HC4051	† Fairchild	85
	74HC4051	Fairchild	
	74HC4051	**Signetics (1160)**	
	TC74HC4051	**Toshiba (1363)**	
HCT	**74HCT4051**	**Signetics (1160)**	
9-Bit Odd/Even Parity Generator/Checker			
HC	LR74HC280	Sharp	90
	SN54HC180	**† TI (714)**	
	SN54HC280	**† TI (714)**	
	SN74HC180	TI	
	SN74HC280	TI	
	TC74HC280	**Toshiba (1363)**	95
9-Bit Three-State, Non-Inverting			
ACT	**V54ACT823**	**† VTC (1367,1373,1374,1375)**	
	V74ACT823	**VTC (1367,1373,1375)**	
10-Bit Three-State, Inverting			
ACT	**V54ACT822**	**† VTC (1367,1373,1374)**	
	V74ACT822	**VTC (1367,1373,1374)**	
10-Bit Three-State, Non-Inverting			
ACT	**V54ACT821**	**† VTC (1367,1373,1374)**	100
	V74ACT821	**VTC (1367,1373,1374)**	
10-Line to 4-Line DCD Priority Encoder			
HC	**TC74HC147**	**Toshiba (1363)**	
4XXX	**CD40147B**	**† RCA (1145)**	
	CD40147BE	**RCA (1145)**	
12-Bit Parity Tree			
4XXX	F4531BC	Fairchild	105
	F4531BM	† Fairchild	
	MC14531BA	**† Motorola (1132)**	
	MC14531BC	**Motorola (1132)**	
	HEF4531B	Signetics	
	883C4531B	† SSS	110
		(Continued)	
12-Bit Parity Tree			
4XXX		(Cont'd)	
	BCL4531B	SSS	
	SCL4531B	SSS	
	TC4531B	**Toshiba (1363)**	
10-Bit Bus Transceiver			
ACT	**V54ACT861**	**† VTC (1367,1371,1374)**	
	V54ACT862	**† VTC (1367,1371,1374)**	115
	V74ACT861	**VTC (1367,1371,1374)**	
	V74ACT862	**VTC (1367,1371,1374)**	
9-Bit Bus Transceiver			
ACT	**V54ACT863**	**† VTC (1367,1371,1375)**	
	V54ACT864	**† VTC (1367,1371,1375)**	
	V74ACT863	**VTC (1367,1371,1375)**	120
	V74ACT864	**VTC (1367,1371,1375)**	

† Military Temperature Range (−55° to 125°C)

* Typical Value

Bold face indicates additional data is provided on the page noted.

DIGITAL–Digital Signal Processing (See Note on Page 844)

Arithmetic Functions

Function	Device	Source	Line
Add/Subtract Logic, 16-Bit	L4C381	† LogicDev	
Adder/Subtractor, 3x8 Bit	MA364	† CTI	
Adder, 6-Bit High Speed	F100180	Fairchild	
	100180	**Signetics (1173,1174)**	
Adder, 9-Bit Wallace Tree	F100182	Fairchild	5
Arithmetic, Math Acceleration Unit	**WE32106**	**AT&T (1603)**	
Arithmetic Unit, Floating Point	TDC1022	TRW-LSI	
Correlator	**MA717**	**† CTI (1009)**	
	L10C23	† LogicDev	
	TDC1004	† TRW-LSI	10
	TDC1023	† TRW-LSI	
Multiplier Slice, Wallace Tree	**SN54LS275**	**† TI (715)**	
	SN74LS275	TI	
Multiplier (2x8) Recode	F100183	Fairchild	
Multiplier (8x8)	AM25S557	AMD	15
	AM25S558	AMD	
	ADSP-1080	**† AD (1007)**	
	ADSP-1081	**† AD (1007)**	
	54F384	**† Fairchild (1026)**	
	54F557	† Fairchild	20
	54F558	† Fairchild	
	54F784	**† Fairchild (1026)**	
	74F384	**Fairchild (1026,5310)**	
	74F557	Fairchild	
	74F558	Fairchild	25
	74F784	**Fairchild (1026,5310)**	
	MPY-8	† IMI	
	LMU08	† LogicDev	
	LMU557	† LogicDev	
	LMU558	† LogicDev	30
	LMU8U	† LogicDev	
	57558	† MMI	
	SN54S557	† MMI	
	SN54S558	† MMI	
	SN74S557	**MMI (1103)**	35
	SN74S558	**MMI (1103)**	
	74F557	**Signetics (1159)**	
	74F558	**Signetics (1159)**	
	SPB9708	† TI	
	MPY008	† TRW-LSI	40
	MPY08	† TRW-LSI	
	74F784	**Signetics (1160)**	
Multiplier (8-Bit Serial)	NCR74HCT384	NCR	
	CD54HCT384	† RCA	
	CD74HCT384	RCA	45
	54HCT384	† Signetics	
	74F384	**Signetics (1158)**	
	74HCT384	Signetics	
Multiplier (8-Bit Serial) with Add/Subtract	74HCT784	NCR	
Multiplier (8-Bit Serial) with Add/Subtract, Quad	74HCT784X4	NCR	50
Multiplier (12x12)	**ADSP-1012**	**† AD (1007)**	
	IDT7212	**† IDT (1087,1088)**	
	IDT7213	**† IDT (1087,1088)**	
	MPV-12	IMI	
	MPY-12	† IMI	55
	LMU12	† LogicDev	
	LMU13	† LogicDev	
	MPY012	† TRW-LSI	
	MPY112	TRW-LSI	
Multiplier (16x16)	AM29516	AMD	60
	AM29517	AMD	
	AM29L516	AMD	
	AM29L517	AMD	
	ADSP-1016	**AD (1007)**	
	MA363	† CTI	65
	IDT7216	**† IDT (1086,1088)**	
	IDT7217	**† IDT (1086,1088)**	
	MPY-16	† IMI	
	LMU16	† LogicDev	
	LMU17	† LogicDev	70
	LMU18	† LogicDev	
	SN54S556	**† MMI (1103,1119)**	
	SN74S556	**MMI (1103,1119)**	
	SN74ALS1616	TI	
	MPY016	† TRW-LSI	75
	TMC216	† TRW-LSI	
	WTL1016	Weitek	
	WTL2516	† Weitek	
	WTL2517	† Weitek	
Multiplier (24x24)	**ADSP-1024**	**† AD (1007)**	80
Multiplier (32x32)	AM29323	AMD	
Multiplier-Accumulator, Complex Numbers	STI-2003	STI	
Multiplier-Accumulator (8x8)	**ADSP-1008**	**AD (1008)**	
	TDC1008	† TRW-LSI	
Multiplier-Accumulator (12x12)	AM29509	AMD	85
	ADSP-1009	† AD	
	IDT7209	**† IDT (1085,1088)**	
	LMA1009	† LogicDev	
	TDC1009	† TRW-LSI	
	TMC2009	† TRW-LSI	90
Multiplier-Accumulator (16x16)	AM29510	AMD	
	ADSP-1110	**† AD (1006)**	
	ASDP-1010	† AD	
	IDT7210	**† IDT (1084,1088)**	
	IDT7243	**† IDT (1084,1088)**	95
	L1010	**Lattice (1092)**	
	LMA1010	† LogicDev	
	MP1010	**MicroPwr (688)**	
	SN74HCT9510	TI	
	SN74HCT9511	TI	100
	SN74HCT9512	TI	
	THCT1010	**TI (1336)**	
	THCT9510	TI	
	TDC1010	† TRW-LSI	
	TDC1043	TRW-LSI	105
	TMC2010	TRW-LSI	
	TMC2110	† TRW-LSI	
	TMC2210	† TRW-LSI	
	VL2010	**VTI (1751,1752,1771)**	
	VL2044	**VTI (1751,1752,1771)**	110
	WTL2010	† Weitek	
	WTL2245	† Weitek	
Multiplier-Accumulator (16x16), single port	NCR45CM16	† NCR	
Shift Matrix, 8-Bit Barrel Shifter	F100158	Fairchild	
	100158	**Signetics (1173,1174)**	115
Shifter, Barrel Shifter	AM25S10	† AMD	
	SN54S350	† AMD	
	SN74S350	AMD	
	54F350	**† Fairchild (1025,1027)**	
	54F510	† Fairchild	120
	74F350	**Fairchild (1025,1027,5310)**	
	74F510	Fairchild	
	LSH32	† LogicDev	
	MC54F350	**† Motorola (1132)**	
	MC74F350	**Motorola (1132)**	125
	54S350	† Signetics	
	74F350	**Signetics (1158)**	
	74S350	**Signetics (1158)**	
	N25S10	Signetics	
	SN74S350	TI	130
Transformer, Fast Fourier	S28214	GouldAMI	

Converters, Analog to Digital

Function	Device	Source	Line
4-Bit Triple Video DAC	AH8304T	† Analogic	
	HDAC34010	**HoneywellSPT (3680)**	
	HDAC34020	**HoneywellSPT (3681)**	
	RGBDAC4T	Intech	135
	VDAC444T	Intech	
4-Bit Triple Video DAC, 125 MSPS	TDC1334	TRW-LSI	
4-Bit, 125 MSPS	TDC1034	TRW-LSI	
4-Bit, 25 MSPS	TDC1021	† TRW-LSI	
4-Bit, 30 MSPS	UAB1005	ThomsonCSF	140
4-Bit, 4 ns	**HDG-0405**	**AD (3115)**	
	DAC-0405	Datel	
	ZN434	Ferranti	
	0405	Intech	
	VDAC444E	Intech	145
	MN0405	**MicroNet (3204)**	
	TDC1034	TRW-LSI	
6-Bit, Triple Video DAC, 20 MSPS	**IMSG170-20**	**Inmos (3195)**	
6-Bit, Triple Video DAC, 35 MSPS	**IMSG170-35**	**Inmos (3195)**	
6-Bit, Triple Video DAC, 50 MSPS	**IMSG170-50**	**Inmos (3195)**	150
6-Bit, Triple Video DAC, 60 MSPS	TMC1863	† Telmos	
6-Bit, 100 MSPS	SDA5200	Siemens	
	TDC1029	† TRW-LSI	
6-Bit, 15 MSPS	**CA3300**	**† RCA (3216,3218)**	
	CA3306	**RCA (3216)**	155
6-Bit, 20 MSPS	TDC1046	† TRW-LSI	
6-Bit, 20 ns	SDA5010	Siemens	
6-Bit, 25 MSPS	TDC1014	† TRW-LSI	
6-Bit, 50 MSPS	SDA6020	Siemens	
6-Bit, 6 ns	**HDG-0605**	**AD (3115)**	160
	DAC-0605	Datel	
	0605	Intech	
	MN0605	**MicroNet (3204)**	
6-Bit, 7 MSPS	TML1060	† Telmos	

† Military Temperature Range (−55° to 125°C)

* Typical Value

Bold face indicates additional data is provided on the page noted.

DIGITAL–Digital Signal Processing (Cont'd)

Converters, Analog to Digital (Cont'd)

Function	Device	Source
6-Bit, 70 MSPS*	**74F500**	**Fairchild** **(1028)**
6-Bit, 75 MSPS	A9001	† AD
7-Bit, 10 MSPS	TML1070	† Telmos
7-Bit, 15 MSPS	TDC1147	TRW-LSI
7-Bit, 20 MSPS	TDC1047	TRW-LSI
7-Bit, 5 MSPS	TML1072	† Telmos
7-Bit, 50 ns	**MC10319**	**Motorola** **(3629)**
7-Bit, 7 MSPS	TML1073	† Telmos
7-Bit, 8 MSPS	TML1071	† Telmos
8-Bit, Triple Video DAC	AH8308T	Analogic
8-Bit, Triple Video DAC, 125 MSPS	TDC1318	TRW-LSI
8-Bit, 100 MSPS	AD9768	AD
	SDA8010	Siemens
8-Bit, 125 MSPS	**AD9700**	**AD** **(3106)**
	TDC1018	† TRW-LSI
8-Bit, 15 MSPS	CA3308	RCA
8-Bit, 20 MSPS	TDC1007	† TRW-LSI
	TDC1016	† TRW-LSI
	TDC1048	† TRW-LSI
8-Bit, 200 MSPS	**HDAC97000**	**† HoneywellSPT** **(3682)**
8-Bit, 50 MSPS	TDC1025	TRW-LSI
8-Bit, 60 MSPS	TML1850	† Telmos
	TML1852	† Telmos
8-Bit, 8 ns	**HDG-0805**	**AD** **(3115)**
	DAC-0805	Datel
	0805	Intech
	MN0805	**MicroNet** **(3204)**
	ADC0805	National
9-Bit, 15 MSPS	TDC1019	† TRW-LSI
9-Bit, 18 MSPS	TDC1019-1	† TRW-LSI
9-Bit, 20 MSPS	TDC1016	† TRW-LSI
10-Bit, with anti-aliasing filter	**RT5640**	**Reticon** **(3165)**
10-Bit, 15 ns	HDD-1015	† AD
10-Bit, 20 MSPS	TDC1016	TRW-LSI
10-Bit, 25 ns	**DAC-HF10**	**† Datel** **(3162)**
10-Bit, 75 MSPS	SP9770	Plessey
10-Bit, 800 ns	**ADC-816**	**† Datel (3160.3161)**
12-Bit, 20 MSPS	TDC1012	TRW-LSI
12-Bit, 2000 ns	**ADC-810**	**† Datel (3160.3161)**
	ADC-817	**† Datel (3160.3161)**
12-Bit, 3000 ns	AD578	† Maxim
12-Bit, 40 ns	**DAC63**	**Burr-Brown** **(3146)**
12-Bit, 500 ns	ADC-868	Datel

Processors

Function	Device	Source
ALU, 4-Bit Binary/BCD	F100181	Fairchild
	100181	**Signetics** **(1173.1174)**
Multiplier and ALU, 22-Bits, Floating Point	TDC1033	TRW-LSI
	TDC1042	TRW-LSI
Multiplier Set, 32 and 64-Bit IEEE Floating Point Multiplier and ALU	WTL1064	† Weitek
	WTL1065	† Weitek
	WTL1164	† Weitek
	WTL1165	† Weitek
	WTL1264	† Weitek
	WTL1265	† Weitek
Multiplier Set, 32-Bit IEEE Floating Point Multiplier and ALU	TMC3200	TRW-LSI
	TMC3201	TRW-LSI
	WTL1032	† Weitek
	WTL1033	† Weitek
Processor, Concurrent	Transputer	Inmos
Processor, Digital Signal Processor	**F9450**	**† Fairchild** **(1607)**
	MBL8764	Fujitsu
	DSP32010	GI
	DSP32C10	GI
	SMJ32010	**† TI** **(730)**
	TMS320	**TI** **(730)**
	TMS32010	TI
	TMS32020	TI
Processor, Geometric Arithmetic Pattern Processor	**NCR45CG72**	**NCR** **(1134)**
Processor, Image Pipeline (Data Flow)	μPD7281	NEC
Processor, Programmable Signal Processor	AM29501	AMD
Processor, Signal Processing Interface	**S7720**	**GouldAMI** **(3588)**
	μPD7720A	NEC
	μPD77P20	NEC
Processor Unit, Floating Point	AM8232	AMD
	8232	Intel
Signal Processor, Analog Real Time	2920	Intel
	2921	Intel
4-Bit Slice	AM2901	† AMD
	AM2903	† AMD
	AM29203	† AMD
	CY2901	† Cypress
	CY7C901	† Cypress
	29F01	**Fairchild** **(1028)**
	IDM2901	† National
	209HCT01	† Sahni
	SFC-2901	ThomsonCSF
	SFC-2903	ThomsonCSF
8-Bit Slice	**SN54AS888**	**† TI** **(1260)**
	SN74AS888	**TI** **(1260)**
16-Bit Versions of 2901	4X2901B	IMI
	L429C01	† LogicDev
	WS59016	† Waferscale

Registers

Function	Device	Source
Pipeline Register, Multilevel	AM29520	AMD
	AM29521	AMD
	L29C520	† LogicDev
	L29C521	† LogicDev
	LPR520	† LogicDev
	LPR521	† LogicDev
Pipeline Register, 8-Bit, 2-Level	**SN54LS548**	**† MMI** **(1110)**
	SN74LS548	**MMI** **(1107.1110)**
Register File, 3-Port (8x8)	LRF07	† LogicDev
Register File, 5-Port (8x8)	LRF08	† LogicDev
Register File, 6-Port (32x32)	WTL1066	Weitek
Shift Register, 8-Bitx3, 18 Bits Long, Programmable	TDC1011	† TRW-LSI

Miscellaneous

Function	Device	Source
Array, Custom	**QuickChip 1**	**Tektronix** **(4756)**
	QuickChip 2	**Tektronix** **(4756)**
	QuickChip 2S	**Tektronix** **(4756)**
	QuickChip 3	**Tektronix** **(4756)**
Array, GaAs Cell, Configurable for custom circuits	**Q-CHIP**	**TriQuint** **(4801)**
Codec, Video A/D and D/A	UVC3100	ITT
Comparator, String Proximity Computer and Ranker	PF474	Proximity
Converter, Digital to Resolver	DRC10520	† DDC
Converter, Digital to Synchro/Resolver	DSC11520	† DDC
Converter, Resolver to Digital	DRC19200	DDC
Filter, FIR Filter	NCR45CF8	NCR
	TDC1028	† TRW-LSI
Filter, Transversal	R5601	Reticon
Sequencer, Programmable FFT Address Sequencer	AM29540	AMD

Note: This section lists devices specifically directed to high-speed, real-time processing. In many cases these devices, performance variations, and slower counterparts are listed by function in other sections. Such related listings can be located by reviewing functional categories in the Master Selection Guide Index or by checking part numbers in the Part Number Index.

† Military Temperature Range (−55° to 125°C)

* Typical Value

Bold face indicates additional data is provided on the page noted.

DIGITAL-ECL

10K Series

Arithmetic Functions

The ECL-10000, 95000, 100K and III-Other Series are presented as separate groups in that sequence. The ECL-10H000 Series is twice the speed of the ECL-10000 Series

Function	Device	Source	Line
Look-Ahead Carry Circuit	F10179	Fairchild	
	F10579	† Fairchild	
	HD10179	Hitachi	
	MC10179	**Motorola (1132)**	5
	MC10579	† Motorola	
	MC10H179	**Motorola (1132)**	
	10179	**Signetics (1173,1174)**	
Dual High Speed Adder/Subtractor	F10180	Fairchild	
	F10580	† Fairchild	10
	HD10180	Hitachi	
	MC10180	**Motorola (1132)**	
	MC10580	† Motorola	
	MC10H180	**Motorola (1132)**	
	10180	**Signetics (1173,1174)**	15
2-Bit Logic Unit/Function Generator	**MC10182**	**Motorola (1132)**	
	MC10582	† Motorola	
2-Bit Multiplier, High Speed	**MC10287**	**Motorola (1132)**	
	MC10687	Motorola	
4x2-Bit Multiplier	**MC10183**	**Motorola (1132)**	20
4-Bit ALU Slice (microprocessor)	MC10800	Motorola	
4-Bit Logic Unit/Function Generator	F10181	Fairchild	
	F10581	† Fairchild	
	HD10181	Hitachi	
	MC10181	**Motorola (1132)**	25
	MC10581	† Motorola	
	MC10H181	**Motorola (1132)**	
	10181	**Signetics (1173,1174)**	
5-Bit Comparator	F10566	† Fairchild	
	MC10H166	**MMI (1105)**	30
	MC10166	**Motorola (1132)**	
	MC10566	† Motorola	
	MC10H166	**Motorola (1132)**	
8x8-Bit Expandable Multiplier	MC10901	Motorola	
8-Bit ALU with Parity	MC10900	Motorola	35
8-Bit BCD/Binary ALU	MC10902	Motorola	

Buffers

Function	Device	Source	Line
Hex	**MC10188**	**Motorola (1124)**	
	MC10H188	**Motorola (1124)**	
	10188	**Signetics (1173,1174)**	

Inverters

Function	Device	Source	Line
Hex	**MC10189**	**Motorola (1124)**	40
	MC10H189	**Motorola (1124)**	
	10189	**Signetics (1173,1174)**	
Hex Inverter/Buffer	**MC10195**	**Motorola (1124)**	
	MC10595	† Motorola	

Counters, Binary

Function	Device	Source	Line
4-Bit	**F10016C**	**Fairchild (615)**	45
	F10016M	**† Fairchild (615)**	
	MC10H016	**MMI (1105)**	
	MC10154	**Motorola (1127)**	
	MC10178	**Motorola (1127)**	
	MC10554	† Motorola	50
	MC10578	† Motorola	
	MC10H016	**Motorola (1127)**	
4-Bit Universal	F10136	Fairchild	
	F10536	† Fairchild	
	HD10136	Hitachi	55
	MC10H136	**MMI (1105)**	
	MC10136	**Motorola (1127)**	
	MC10536	† Motorola	
	MC10H136	**Motorola (1127)**	
	10136	**Signetics (1173,1174)**	60

Counters, Decade

Function	Device	Source	Line
Bi-Quinary	**MC10138**	**Motorola (1127)**	
	MC10538	† Motorola	
Universal	F10137	Fairchild	
	F10537	Fairchild	
	MC10137	**Motorola (1127)**	65
	MC10537	Motorola	
	10137	**Signetics (1173,1174)**	
Decade Counter	**F10010C**	**Fairchild (615)**	
	F10010M	**† Fairchild (615)**	

Decoders

Function	Device	Source	Line
Binary to 1-8 (high)	F10162	Fairchild	70
	F10562	**† Fairchild (615)**	
	HD10162	Hitachi	
	MC10H162	**MMI (1105)**	
	DG10H162	Motorola	
	MC10162	**Motorola (1130)**	75
	MC10562	† Motorola	
	MC10H162	**Motorola (1130)**	
	10162	**Signetics (1173,1174)**	
Binary to 1-8 (low)	F10161	Fairchild	
	F10561	**† Fairchild (615)**	80
	HD10161	Hitachi	
	MC10H161	**MMI (1105)**	
	MC10161	**Motorola (1130)**	
	MC10561	† Motorola	
	MC10H161	**Motorola (1130)**	85
	10161	**Signetics (1173,1174)**	
Dual Binary to 1-4 (high)	F10172	Fairchild	
	F10572	† Fairchild	
	MC10172	**Motorola (1130)**	
	MC10572	† Motorola	90
	MC10H172	**Motorola (1130)**	
	10172	**Signetics (1173,1174)**	
Dual Binary to 1-4 (low)	F10171	Fairchild	
	F10571	† Fairchild	
	MC10171	**Motorola (1130)**	95

(Continued)

Function	Device	Source	Line
Dual Binary to 1-4 (low) (Cont'd)	MC10571	† Motorola	
	MC10H171	**Motorola (1130)**	
	10171	**Signetics (1173,1174)**	

Drivers

Function	Device	Source	Line
Dual TTL/MST Bus	**MC10128**	**Motorola (1125)**	
Triple 3-Input Bus	**MC10H423**	**Motorola (1125)**	100
Triple 4-3 Input Bus	F10123	Fairchild	
	F10523	**† Fairchild (615)**	
	MC10123	**Motorola (1125)**	
	MC10H123	**Motorola (1125)**	
	10123	**Signetics (1173,1174)**	105
Quad Bus	F10192	Fairchild	
	F10592	† Fairchild	
	MC10192	Motorola	
	10192	**Signetics (1173,1174)**	

Flip-Flops, D-Type

Function	Device	Source	Line
Dual Master-Slave	F10131	Fairchild	110
	F10231	Fairchild	
	F10531	† Fairchild	
	F10631	**† Fairchild (615)**	
	HD10131	Hitachi	
	HD10231	Hitachi	115
	MC10H131	**MMI (1105)**	
	MC10131	**Motorola (1126)**	
	MC10231	**Motorola (1127)**	
	MC10531	† Motorola	
	MC10631	† Motorola	120
	MC10H131	**Motorola (1126)**	
	10131	**Signetics (1173,1174)**	
	10231	**Signetics (1173,1174)**	
Hex Master-Slave	F10176	Fairchild	
	F10576	† Fairchild	125
	MC10H176	**MMI (1105)**	
	MC10176	**Motorola (1126)**	
	MC10576	† Motorola	
	MC10H176	**Motorola (1126)**	
	10176	**Signetics (1173,1174)**	130
Hex Master-Slave (with common reset)	F10186	Fairchild	
	F10586	† Fairchild	
	MC10186	**Motorola (1126)**	
	MC10586	† Motorola	
	MC10H186	**Motorola (1126)**	135

Flip-Flops, J-K Type

Function	Device	Source	Line
Dual J-K Master-Slave	F10135	Fairchild	
	F10535	**† Fairchild (615)**	
	MC10135	**Motorola (1126)**	
	MC10535	† Motorola	
	MC10H135	**Motorola (1126)**	140
	10135	**Signetics (1173,1174)**	

† Military Temperature Range (−55° to 125°C)

* Typical Value

Bold face indicates additional data is provided on the page noted.

DIGITAL-ECL (Cont'd)

10K Series

Gates, AND

Function	Device	Source	Line
Dual 4-Input	**10108**	**Signetics** **(1173,1174)**	
Quad 2-Input (3 AND, 1 AND/NAND)	F10104	Fairchild	
	F10504	**† Fairchild** (615)	
	HD10104	Fairchild	
	HD10104	Hitachi	5
	MC10H104	**MMI** (1105)	
	MC10104	**Motorola** (1122)	
	MC10504	† Motorola	
	MC10H104	**Motorola** (1122)	
	10104	**Signetics** **(1173,1174)**	10
Hex	**MC10197**	**Motorola** (1122)	
	MC10597	† Motorola	

Gates, OR

Function	Device	Source	Line
Dual 3-Input 3-Output (line driver)	F10110	Fairchild	
	F10210	Fairchild	
	F10510	† Fairchild	15
	F10610	† Fairchild	
	HD10110	Hitachi	
	HD10210	Hitachi	
	MC10H210	**MMI** (1105)	
	MC10110	**Motorola** (1122)	20
	MC10210	**Motorola** (1122)	
	MC10610	† Motorola	
	MC10H210	**Motorola** (1122)	
	10110	**Signetics** **(1173,1174)**	
Quad 2-Input (3 OR, 1 OR/NOR)	F10103	Fairchild	25
	F10503	† Fairchild	
	MC10H103	**MMI** (1105)	
	MC10103	**Motorola** (1122)	
	MC10503	† Motorola	
	MC10H103	**Motorola** (1122)	30
	10103	**Signetics** **(1173,1174)**	

Gates, NOR

Function	Device	Source	Line
Dual 3-Input 3-Output (line driver)	F10111	Fairchild	
	F10211	Fairchild	
	F10511	† Fairchild	
	F10611	† Fairchild	35
	HD10111	Hitachi	
	HD10211	Hitachi	
	MC10H211	**MMI** (1105)	
	MC10111	**Motorola** (1123)	
	MC10211	**Motorola** (1123)	40
	MC10611	† Motorola	
	MC10H211	**Motorola** (1123)	
	10111	**Signetics** **(1173,1174)**	
	10210	**Signetics** **(1173,1174)**	
	10211	**Signetics** **(1173,1174)**	45
Dual 3-Input 3-Output (1 OR, 2 NOR) (line driver)	F10212	Fairchild	
	F10612	† Fairchild	
	MC10212	**Motorola** (1123)	
	MC10612	† Motorola	
Triple 4-3-3 Input	F10106	Fairchild	50
	F10506	† Fairchild	
	HD10106	Hitachi	
	MC10H106	**MMI** (1105)	
	MC10106	**Motorola** (1123)	
	MC10506	† Motorola	55
	MC10H106	**Motorola** (1123)	
	10106	**Signetics** **(1173,1174)**	
Quad 2-Input (3 NOR, 1 OR/NOR)	F10102	Fairchild	
	F10502	**† Fairchild** (615)	
	HD10102	Hitachi	60
	MC10H102	**MMI** (1105)	
	MC10102	**Motorola** (1122)	
	MC10502	† Motorola	
	MC10H102	**Motorola** (1122)	
	10102	**Signetics** **(1173,1174)**	65
Quad 3-Input (one input common)	F10100	Fairchild	
	F105100	† Fairchild	
	MC10H100	**MMI** (1105)	
	MC10100	**Motorola** (1123)	
	MC10500	† Motorola	70
	MC10H100	**Motorola** (1123)	
	10100	**Signetics** **(1173,1174)**	

Gates, OR/NOR

Function	Device	Source	Line
Dual 4-5 Input	F10109	Fairchild	
	F10509	† Fairchild	
	HD10109	Hitachi	75
	HD10209	Hitachi	
	MC10H109	**MMI** (1105)	
	MC10109	**Motorola** (1123)	
	MC10509	† Motorola	
	MC10H109	**Motorola** (1123)	80
	10109	**Signetics** **(1173,1174)**	
Triple 2-3-2 Input	F10105	Fairchild	
	F10505	† Fairchild	
	HD10105	Hitachi	
	MC10H105	**MMI** (1105)	85
	MC10105	**Motorola** (1123)	
	MC10505	† Motorola	
	MC10H105	**Motorola** (1123)	
	DM10105	National	
	10105	**Signetics** **(1173,1174)**	90
Quad 2-Input (one input common)	F10101	Fairchild	
	F10501	**† Fairchild** (615)	
	HD10101	Hitachi	
	MC10H101	**MMI** (1105)	
	MC10101	**Motorola** (1123)	95
	MC10501	† Motorola	
	MC10H101	**Motorola** (1123)	
	10101	**Signetics** **(1173,1174)**	

Gates, OR-AND

Function	Device	Source	Line
Dual 2-Wide 3-Input	F10118	Fairchild	
	F10518	† Fairchild	100
	HD10118	Hitachi	
	MC10H118	**MMI** (1105)	
	MC10118	**Motorola** (1123)	
	MC10518	† Motorola	
		(Continued)	
Dual 2-Wide 3-Input (Cont'd)	**MC10H118**	**Motorola** (1123)	105
	10118	**Signetics** **(1173,1174)**	
4-Wide 4-3-3-3 Input	F10119	Fairchild	
	F10519	† Fairchild	
	HD10119	Hitachi	
	MC10H119	MMI	110
	MC10119	**Motorola** (1123)	
	MC10519	† Motorola	
	MC10H119	**Motorola** (1123)	
	10119	**Signetics** **(1173,1174)**	

Gates, OR-AND/OR-AND Invert

Function	Device	Source	Line
Dual 2-Wide 2-3 Input	F10117	Fairchild	115
	F10517	† Fairchild	
	HD10117	Hitachi	
	MC10H117	**MMI** (1105)	
	MC10117	**Motorola** (1123)	
	MC10517	† Motorola	120
	MC10H117	**Motorola** (1123)	
	10117	**Signetics** **(1173,1174)**	
4-Wide 3-Input	F10121	Fairchild	
	F10521	† Fairchild	
	HD10121	Hitachi	125
	MC10H121	**MMI** (1105)	
	MC10121	**Motorola** (1123)	
	MC10521	† Motorola	
	MC10H121	**Motorola** (1123)	
	10121	**Signetics** **(1173,1174)**	130

Gates, Exclusive OR

Function	Device	Source	Line
Quad	F10113	Fairchild	
	F10513	† Fairchild	
	MC10113	**Motorola** (1123)	
	MC10513	† Motorola	
	MC10H113	**Motorola** (1123)	135
	10113	**Signetics** **(1173,1174)**	

Gates, Exclusive OR/NOR

Function	Device	Source	Line
Triple 2-Input	F10107	Fairchild	
	F10507	† Fairchild	
	HD10107	Hitachi	
	MC10H107	**MMI** (1105)	140
	MC10107	**Motorola** (1123)	
	MC10507	† Motorola	
	MC10H107	**Motorola** (1123)	
	10107	**Signetics** **(1173,1174)**	

Latches

Function	Device	Source	Line
Quint	F10175	Fairchild	145
	F10575	† Fairchild	
	HD10175	Hitachi	
	MC10H175	**MMI** (1105)	
	MC10175	**Motorola** (1126)	
	MC10575	† Motorola	150
	MC10H175	**Motorola** (1126)	
	10175	**Signetics** **(1173,1174)**	
Dual D Clocked	F10130	Fairchild	
	F10530	† Fairchild	
	HD10130	Hitachi	155
	HD10230	Hitachi	
		(Continued)	

† Military Temperature Range (−55° to 125°C)

* Typical Value

Bold face indicates additional data is provided on the page noted.

DIGITAL-ECL (Cont'd)

10K Series

Latches (Cont'd)

Function	Device	Source
Dual D Clocked (Cont'd)		
	MC10H130	**MMI (1105)**
	MC10130	**Motorola (1126)**
	MC10530	† Motorola
	MC10H130	**Motorola (1126)**
	10130	**Signetics (1173,1174)**
Dual 2 to 1 Multiplexer-Latch		
	F10134	Fairchild
	F10534	**† Fairchild (615)**
	HD10134	Hitachi
	MC10134	**Motorola (1130)**
	MC10534	† Motorola
	10134	**Signetics (1173,1174)**
Dual 2 to 1 Multiplexer-Latch, Common Reset		
	F10132	Fairchild
	F10532	† Fairchild
	HD10132	Hitachi
	MC10132	**Motorola (1129)**
	MC10532	† Motorola
	10132	**Signetics (1173,1174)**
Quad, Common Clock, Separate Output Enable		
	F10168	Fairchild
	F10568	† Fairchild
	MC10168	**Motorola (1126)**
	MC10568	† Motorola
Quad D, Gated Output		
	F10133	Fairchild
	F10153	Fairchild
	F10533	**† Fairchild (615)**
	F10553	† Fairchild
	HD10133	Hitachi
	MC10133	**Motorola (1126)**
	MC10153	**Motorola (1126)**
	MC10533	† Motorola
	MC10553	† Motorola
	10133	**Signetics (1173,1174)**
Quad 2-Input Multiplexer-Latch		
	F10173	Fairchild
	F10573	† Fairchild
	MC10H173	**MMI (1105)**
	MC10173	**Motorola (1129)**
	MC10H173	**Motorola (1129)**
	10173	**Signetics (1173,1174)**

Memories

For additional information, see Master Selection Guide-Memory sections

Function	Device	Source
CAM (16-Bit content addressable)		
	MC10H155	Motorola
	10155	**Signetics (1173,1174)**
PROM (32x8)	**MCM10139**	**Motorola (4124)**
PROM (256x4)	F10416	Fairchild
	F10Z416	Fairchild
	MCM10149	**Motorola (4124)**
	10149	**Signetics (1173,1174,4166)**
RAM (8x2) Simultaneous Read-Write		
	MCM10143	**Motorola (4123)**
RAM (16x4)	F10145AC	Fairchild
	F10402	Fairchild
	F10545AM	† Fairchild
	HD10145	Hitachi
		(Continued)
RAM (16x4) (Cont'd)		
	MC10H145	**MMI (1105)**
	MC10H145	**Motorola (1128,4123)**
	MCM10145	**Motorola (4123)**
	10145	Signetics
RAM (64x1) 50 Ohm Drive		
	HD10148	Hitachi
	MC10148	Motorola
	MCM10548	† Motorola
RAM (128x1)	HD10147	Hitachi
	MCM10147	**Motorola (4123)**
	MCM10547	† Motorola
RAM (256x1)	**MCM10144**	**Motorola (4123)**
	MCM10152	**Motorola (4123)**
	MCM10544	† Motorola
	DM10414	National
RAM (256x4)	MB7072E	Fujitsu
	MB7072N	Fujitsu
	MBM10422A-7	Fujitsu
	MCM10422	**Motorola (4123)**
	DM10422	National
RAM (1024x1)	**F100415A**	**Fairchild (4014)**
	F10415	**Fairchild (4014)**
	F10415A	**Fairchild (4014)**
	F10474C	Fairchild
	MCM10146	**Motorola (4123)**
	MCM10415	**Motorola (4123)**
	MCM10546	† Motorola
	DM10415	National
	10415	Signetics
	10474	Signetics
	10474A	Signetics
RAM (1024x4)	**MCM10474**	**Motorola (4123)**
	10474	Signetics
	10474A	Signetics
RAM (4096x1)	F10470	Fairchild
	MBM10470A-10	Fujitsu
	MBM10470A-15	Fujitsu
	MBM10470A-20	Fujitsu
	DM10470	National
	DM10470A	National
	DM10470L	National
RAM (4096x4)	MCM10484	Motorola
RAM (16384x1)	F10480	Fairchild

Multiplexers (Digital)

Function	Device	Source
Dual 4 to 1	F10174	Fairchild
	F10574	† Fairchild
	HD10174	Hitachi
	MC10H174	**MMI (1105)**
	MC10174	**Motorola (1129)**
	MC10574	† Motorola
	MC10H174	**Motorola (1129)**
	10174	**Signetics (1173,1174)**
Quad 2 to 1 (inverting with enable)		
	F10159	Fairchild
	F10559	† Fairchild
	MC10H159	**MMI (1105)**
	MC10159	**Motorola (1129)**
	MC10559	† Motorola
	MC10H159	**Motorola (1129)**
	10159	**Signetics (1173,1174)**
Quad 2 to 1 (non-inverting)		
	F10158	Fairchild
	F10558	**† Fairchild (615)**
	MC10H158	**MMI (1105)**
	MC10158	**Motorola (1129)**
		(Continued)
Quad 2 to 1 (non-inverting) (Cont'd)		
	MC10558	† Motorola
	MC10H158	**Motorola (1129)**
	10158	**Signetics (1173,1174)**
8 to 1	F10164	Fairchild
	F10564	† Fairchild
	HD10164	Hitachi
	MC10H164	**MMI (1105)**
	MC10164	**Motorola (1129)**
	MC10564	† Motorola
	MC10H164	**Motorola (1129)**
	10164	**Signetics (1173,1174)**

Multivibrators

Function	Device	Source
Monostable	**MC10198**	**Motorola (1131)**

Shift Registers

Function	Device	Source
4-Bit	F10000C	Fairchild
4-Bit Universal	F10141	Fairchild
	F10541	† Fairchild
	MC10H141	**MMI (1105)**
	MC10141	**Motorola (1128)**
	MC10541	† Motorola
	MC10H141	**Motorola (1128)**
	10141	**Signetics (1173,1174)**

Translators

Function	Device	Source
Dual ECL to MOS/TTL		
	MC75358	Motorola
Triple ECL to NMOS		
	F10177	Fairchild
	MC10177	**Motorola (1124)**
Quad Differential Receiver/MST to ECL		
	MC10190	**Motorola (1124)**
	MC10590	† Motorola
Quad ECL to TTL		
	MC10H350	**Motorola (1124)**
Quad ECL to TTL (differential input)		
	F10125	Fairchild
	F10525	**† Fairchild (615)**
	HD10125	Hitachi
	MC10H125	**MMI (1105)**
	MC10125	**Motorola (1124)**
	MC10525	† Motorola
	MC10H125	**Motorola (1124)**
	10125	**Signetics (1173,1174)**
Quad TTL to ECL		
	MC10H424	**Motorola (1124)**
Quad TTL to ECL OR/NOR		
	F10124	Fairchild
	F10524	**† Fairchild (615)**
	HD10124	Hitachi
	MC10H124	**MMI (1105)**
	MC10124	**Motorola (1124)**
	MC10524	† Motorola
	MC10H124	**Motorola (1124)**
	10124	**Signetics (1173,1174)**
Hex ECL to MST		
	MC10191	**Motorola (1124)**
	MC10591	† Motorola
10K ECL to TTL with Latch		
	DP8480	National
	DP8482	National

† Military Temperature Range (−55° to 125°C)

* Typical Value

Bold face indicates additional data is provided on the page noted.

DIGITAL-ECL (Cont'd)

10K Series

Miscellaneous

Function	Device	Source	Line
Active Terminator	**F10014C**	**Fairchild (615)**	
	F10014M	**† Fairchild (615)**	
Analog Mixer, Double Balanced	MC12002	Motorola	
	MC12502	Motorola	
Error Detection/Correction Circuit	**MC10163**	**Motorola (1132)**	5
	MC10193	**Motorola (1132)**	
	MC10563	† Motorola	
	MC10593	† Motorola	
	MC10905	Motorola	
Micro-Code Sequencer	MC10904	Motorola	10
Dual Bus Driver/Receiver with 4-to-1 Output Multiplexers	**MC10H332**	**Motorola (1125)**	
Dual Simultaneous Bus Transceiver	MC10194	Motorola	
	MC10594	† Motorola	
Triple Differential Line Receiver	F10114	Fairchild	
	F10116	Fairchild	15
	F10514	**† Fairchild (615)**	
	F10516	**† Fairchild (615)**	
	HD10116	Hitachi	
	MC10H116	**MMI (1105)**	
	MC10114	**Motorola (1131)**	20
	MC10116	**Motorola (1131)**	
	MC10216	**Motorola (1131)**	
	MC10514	† Motorola	
	MC10516	† Motorola	
	MC10616	† Motorola	25
	MC10H116	**Motorola (1131)**	
	DM10116	National	
	10114	**Signetics (1173,1174)**	
	10116	**Signetics (1173,1174)**	
	10216	**Signetics (1173,1174)**	30
Quad Bus Driver/Receiver with Transmit and Receiver Latches	**MC10H334**	**Motorola (1125)**	
Quad Bus Driver/Receiver with 2-to-1 Output Multiplexers	**MC10H330**	**Motorola (1125)**	
Quad Bus Receiver	**MC10129**	**Motorola (1131)**	
	10129	**Signetics (1173,1174)**	
Quad Differential Line Receiver	F10115	Fairchild	35
	F10515	**† Fairchild (615)**	
	MC10H115	**MMI (1105)**	
	MC10115	**Motorola (1131)**	
	MC10515	† Motorola	
	MC10H115	**Motorola (1131)**	40
	10115	**Signetics (1173,1174)**	
Two Modulus Prescaler, Divide by 20/21	MC12019	Motorola	
8-Input Priority Encoder	F10165	Fairchild	
	F10565	† Fairchild	
	MC10165	**Motorola (1131)**	45
	MC10565	† Motorola	
	MC10H165	**Motorola (1131)**	
	10165	**Signetics (1173,1174)**	
9-Bit Parity Circuit (2 carry inputs)	F10570	† Fairchild	
	MC10170	**Motorola (1132)**	50
12-Bit Parity Generator/Checker	F10160	Fairchild	
	F10560	† Fairchild	
	HD10160	Hitachi	
	MC10H160	**MMI (1105)**	
	MC10160	**Motorola (1132)**	55
	MC10560	† Motorola	
	MC10H160	**Motorola (1132)**	
	10160	**Signetics (1173,1174)**	

100K Series

Arithmetic Functions

Function	Device	Source	Line
Look Ahead Carry Circuit	F100179	Fairchild	
	HD100179	Hitachi	60
	100179	**Signetics (1173,1174)**	
2x8-Bit Recode Multiplier	HD100183	Hitachi	
4-Bit Binary/Decade Logic Unit	HD100181	Hitachi	
9-Bit Comparator	F100166	Fairchild	
	HD100166	Hitachi	65
	100166	**Signetics (1173,1174)**	
9-Bit Wallace Tree Adder	HD100182	Hitachi	

Buffers

Function	Device	Source	Line
9-Bit	F100122	Fairchild	
	HD100122	Hitachi	
	100122	**Signetics (1173,1174)**	70

Inverters

Function	Device	Source	Line
9-Bit	F100121	Fairchild	

Counters

Function	Device	Source	Line
Divide by 4 Frequency Divider	**SAB1034**	**Signetics (1173)**	
	SAB1534	**Signetics (1173)**	
	SAF1034	**Signetics (1173)**	
	SAF1534	**Signetics (1173)**	75
Multipurpose Counting Register	F100136	Fairchild	
	HD100136	Hitachi	
	100136	**Signetics (1173,1174)**	
4-Bit Decade Counter	F100140	Fairchild	
4-Bit Synchronous Counter	F100139	Fairchild	80

Decoders

Function	Device	Source	Line
Universal	F100170	Fairchild	
	HD100170	Hitachi	
	100170	**Signetics (1173,1174)**	

Drivers

Function	Device	Source	Line
Backplane	F100126	Fairchild	
	100126	**Signetics (1173,1174)**	85
High Speed Line	F100113	Fairchild	
	100113	**Signetics (1173,1174)**	
Quad	F100112	Fairchild	
	HD100112	Hitachi	
	100112	**Signetics (1173,1174)**	90
Hex Bus	F100123	Fairchild	
	HD100123	Hitachi	
	100123	**Signetics (1173,1174)**	

Flip-Flops, D-Type

Function	Device	Source	Line
Triple	F100131	Fairchild	
	HD100131	Hitachi	95
	100131	**Signetics (1173,1174)**	
Hex	F100151	Fairchild	
	HD100151	Hitachi	
	100151	**Signetics (1173,1174)**	

Flip-Flops, J-K Type

Function	Device	Source	Line
Triple J-K Master-Slave	F100135	Fairchild	100

Gates, AND/NAND

Function	Device	Source	Line
Quintuple with Function Output	F100104	Fairchild	

Gates, OR/NOR

Function	Device	Source	Line
Quint 2-Input	F100102	Fairchild	
	HD100102	Hitachi	
	100102	**Signetics (1173,1174)**	
Triple 5-Input	F100101	Fairchild	105
	HD100101	Hitachi	
	100101	**Signetics (1173,1174)**	

Gates, OR-AND/OR-AND Invert

Function	Device	Source	Line
Triple	F100117	Fairchild	
	HD100117	Hitachi	
	100117	**Signetics (1173,1174)**	110
5-Wide	F100118	Fairchild	
	HD100118	Hitachi	
	100118	**Signetics (1173)**	

Gates, Exclusive OR/NOR

Function	Device	Source	Line
Quint	F100107	Fairchild	
	HD100107	Hitachi	115
	100107	**Signetics (1173,1174)**	

Latches

Function	Device	Source	Line
Triple D	F100130	Fairchild	
	HD100130	Hitachi	
Hex D	F100150	Fairchild	
	HD100150	Hitachi	120
	100150	**Signetics (1173,1174)**	

Memories

Function	Device	Source	Line
CAM (4x4)	F100142	Fairchild	
	HD100142	Hitachi	

† Military Temperature Range (−55° to 125°C)

* Typical Value

Bold face indicates additional data is provided on the page noted.

DIGITAL–ECL (Cont'd)

100K Series

Memories (Cont'd)

Function	Device	Source	Line
PROM (256x4)	F100416	Fairchild	
	F100Z416	Fairchild	
	100149	**Signetics (4166)**	
RAM (16x4)	F100402	Fairchild	
RAM (16x4 register file)	F100145	Fairchild	5
	HD100145	Hitachi	
RAM (16x8 or 64x2)	SH100B396	Siemens	
RAM (256x1)	F100414	Fairchild	
RAM (256x4)	**F100422**	**Fairchild (4014)**	
	MBM100422A-7	Fujitsu	10
	MCM100422	Motorola	
RAM (1024x1)	**F100415**	**Fairchild (4014)**	
RAM (1024x4)	F100474	Fairchild	
	MCM100474	Motorola	
	100474	Signetics	15
	100474A	Signetics	
RAM (4096x1)	F100470	Fairchild	
	MBM100470A-10	Fujitsu	
RAM (4096x4)	MCM100484	Motorola	
RAM (16384x1)	F100480	Fairchild	20
	MCM100480	Motorola	

Multiplexers (Digital)

Function	Device	Source	Line
Universal (nine 4/1)	SH100B384	Siemens	
Dual 8-Input	F100163	Fairchild	
	HD100163	Hitachi	
	100163	**Signetics (1173,1174)**	25
Triple 4-Input	F100171	Fairchild	
	HD100171	Hitachi	
	100171	**Signetics (1173,1174)**	
Quad 2-Input with Latch	F100155	Fairchild	
	HD100155	Hitachi	30
	100155	**Signetics (1173,1174)**	
16-Input	F100164	Fairchild	
	HD100164	Hitachi	
	100164	**Signetics (1173,1174)**	

Shift Registers

Function	Device	Source	Line
Mask-Merge	F100156	Fairchild	35
	HD100156	Hitachi	
8-Bit Matrix	HD100158	Hitachi	
8-Bit Universal	F100141	Fairchild	
	HD100141	Hitachi	
	100141	**Signetics (1173,1174)**	40

Translators

Function	Device	Source	Line
TTL-100K ECL	F100124	Fairchild	
	100124	**Signetics (1173)**	
100K ECL-TTL	F100125	Fairchild	
	HD100125	Hitachi	
	100125	**Signetics (1173)**	45
100K ECL-TTL and TTL-100K ECL	**100255**	**Signetics (1173)**	
100K ECL-10K ECL	**100175**	**Signetics (1173,1174)**	
100K ECL-TTL and TTL-100K ECL	F100255	Fairchild	
100K ECL-10K ECL	F100175	Fairchild	

Miscellaneous

Function	Device	Source	Line
Bidirectional Shifter	SH100B419	Siemens	50
Clock Pulse Generator	SH100B392	Siemens	
Comparator and Multiplexer	SH100B402	Siemens	
ECL/TTL Bus Transceiver	SH100255	Siemens	
Error Correction Circuit	SH100B404	Siemens	
Interface Transceiver	SH100B250	Siemens	55
Programmable Timer/Counter	SH100B395	Siemens	
Quintuple Line Transceiver	F100250	Fairchild	
Register File with Ring Shifter	SH100B420	Siemens	
Register File with Shift Logic	SH100B393	Siemens	
Universal Priority Encoder	F100165	Fairchild	60
	HD100165	Hitachi	
	100165	**Signetics (1173,1174)**	
Universal Register File	SH100B417	Siemens	
Dual Line Transmitter and Receiver	SH100B252	Siemens	
Dual Sequencer for SH100B480	SH100B481	Siemens	65
Dual 9-Bit Parity Generator/Checker	F100160	Fairchild	
	HD100160	Hitachi	
	100160	**Signetics (1173,1174)**	
Quintuple Line Receiver	F100114	Fairchild	
	HD100114	Hitachi	70
	100114	**Signetics (1173,1174)**	
Quintuple Transceiver	F100194	Fairchild	
Nine Buffered Gates	SH100B122	Siemens	
4-Bit Microprocessor Slice	SH100B480	Siemens	

III and Other Series

Counters

Function	Device	Source	Line
Bi-Quinary	**MC1678**	**Motorola (1127)**	75
Divide by 4 Prescaler (1 GHz)	**MC1697**	**Motorola (1128)**	
	MC1699	**Motorola (1128)**	
Divide by 4 (1 GHz)	11C05C	Fairchild	
	11C05M	† Fairchild	
	SP8610	Plessey	80
	SP8611A	Plessey	

(Continued)

Function	Device	Source	Line
Divide by 4 (1 GHz) (Cont'd)	SP8611B	Plessey	
	SP8617B	Plessey	
	CA3199	RCA	
Divide by 5/6 Prescaler, 650 MHz	11C91C	Fairchild	85
	11C91M	† Fairchild	
Divide by 10/11 Prescaler, 650 MHz	11C90C	Fairchild	
	11C90M	† Fairchild	
	SP8680	Plessey	
Divide by 20 Prescaler	CA3232	RCA	90
Divide by 256 Prescaler	CA3211	RCA	
Binary	**MC1654**	**Motorola (1127)**	

Flip-Flops, D-Type

Function	Device	Source	Line
Master-Slave	11C70C	Fairchild	
	MC1670	**Motorola (1127)**	
	SP1670B	Plessey	95
Master-Slave (UHF prescaler)	11C06C	Fairchild	
	11C06M	† Fairchild	
	MC1690	**Motorola (1127)**	

Flip-Flops, R-S Type

Function	Device	Source	Line
Dual, Clocked	**MC1666**	**Motorola (1127)**	

Gates, OR

Function	Device	Source	Line
Quad 2-Input	**MC1664**	**Motorola (1122)**	100

Gates, NOR

Function	Device	Source	Line
Quad 2-Input	**MC1662**	**Motorola (1122)**	

Gates, OR/NOR

Function	Device	Source	Line
Dual 4-Input	**MC1660**	**Motorola (1123)**	
	SP1660B	Plessey	
	SP16F60	Plessey	
Dual 4-5 Input	11C01C	Fairchild	105
	MC10H209	**Motorola (1123)**	
	MC1688	**Motorola (1123)**	

Gates, Exclusive OR

Function	Device	Source	Line
Triple 2-Input	**MC1672**	**Motorola (1123)**	

Gates, Exclusive NOR

Function	Device	Source	Line
Triple 2-Input	**MC1674**	**Motorola (1123)**	

Latches

Function	Device	Source	Line
Dual Clocked	**MC1668**	**Motorola (1127)**	110

Multivibrators

Function	Device	Source	Line
Voltage Controlled	**MC1658**	**Motorola (1131)**	
	SP1658	Plessey	

Shift Registers

Function	Device	Source	Line
4-Bit	**MC1694**	**Motorola (1128)**	

Miscellaneous

Function	Device	Source	Line
Prescaler for Multiband Digital Tuning System	TD6109	Toshiba	

† Military Temperature Range (−55° to 125°C)

* Typical Value

Bold face indicates additional data is provided on the page noted.

DIGITAL-ECL (Cont'd)

Function	Device	Source		Line
III and Other Series				
Miscellaneous (Cont'd)				
Voltage Controlled Oscillator				
	MC1648	**Motorola**	(1131)	
	MC1648M	† **Motorola**	(1131)	
	SP1648	Plessey		
Dual Analog/Digital Comparator				
	MC1650	Motorola		
	MC1651	Motorola		5
	SP1650B	Plessey		
Quad Line Receiver				
	MC1692	**Motorola**	(1131)	
	SP1692B	Plessey		

† Military Temperature Range (−55° to 125°C)

* Typical Value

Bold face indicates additional data is provided on the page noted.

DIGITAL-Gallium Arsenide

Function	Device	Source	Line
Buffers			
Dual, 1-4 Fanout	**10G011**	**GigaBit (1063)**	
Counters, Binary			
Counter, Divider, 7-Stage, Divide by 2, 4—64	**10G065**	**GigaBit (1064)**	
Divider, Divide by 2	**HMD11301-2**	**Harris (1068,1077)**	
Divider, Divide by 5/6, 10/11, 20/21, 40/41	**10G070**	**GigaBit (1064)**	
Divider, Divide by 10/11	**HMD11011-2**	**Harris (1068)**	
Divider, 2-Stage, Divide by 2, 4	**10G060**	**GigaBit (1064)**	
Drivers			
Dual, Differential Input, Complementary Output	**10G012**	**GigaBit (1063)**	
Flip-Flops, D-Type			
Dual with Preset and Clear	**10G021**	**GigaBit (1063)**	
Single	**HMD11131-2**	**Harris (1068,1077)**	
Gates, AND/NAND			
5-Input	**HMD11104-2**	**Harris (1068,1077)**	
Gates, NOR			
Quad, 3-Input	**10G000**	**GigaBit (1063)**	
Gates, OR/NOR			
5-Input	**HMD11101-2**	**Harris (1068,1077)**	
Gates, Exclusive OR			
Dual, 2-Input	**HMD11113-2**	**Harris (1068,1077)**	
Multiplexers			
Multiplexer	**10G040**	**GigaBit (1064)**	
Multiplexers	**10G041**	**GigaBit (1064)**	
Shift Registers			
4-Bit Universal	**HMD12141-1**	**Harris (1068,1073)**	
Miscellaneous			
Array, GaAs Cell, Configurable for custom circuits	**Q-CHIP**	**TriQuint (4801)**	
Arrays, Diode, Schottky 14 Single, 1 full-wave rectifier	**16G010** **16G011**	**GigaBit (1064)** **GigaBit (1064)**	
Arrays, Transistor, Dual-Gate D-MESFETS, 8 Single	16G021	GigaBit	
Arrays, Transistor, Single-gate D-MESFETS, 9-Single, 1 dual	16G020	GigaBit	
Comparator, Phase	**HMD11685-2**	**Harris (1068,1077)**	
Programmable Pulse Driver/Formatter	**HMD11502-2**	**Harris (1068)**	

† Military Temperature Range (−55° to 125°C)

* Typical Value

Bold face indicates additional data is provided on the page noted.

DIGITAL-HNIL/HTL

Function	Device	Source	Line
Arithmetic Functions			
4-Bit Comparator	343A/C	TeledyneS	
	343B/M	† TeledyneS	
Buffers/Inverters			
See also: Gates, Miscellaneous			
Hex	MC680	Motorola	
	MC690	Motorola	5
	MC697	Motorola	
	332A/C	TeledyneS	
	332B/M	† TeledyneS	
Hex Open Collector	MC678	Motorola	
	MC681	Motorola	10
	MC689	Motorola	
Hex Strobed	MC677	Motorola	
	FZH201	Siemens	
	335A/C	TeledyneS	
Hex Strobed, Open Collector	334A/C	TeledyneS	15
Counters, Binary			
Binary	MC685	Motorola	
	372A/C	TeledyneS	
	372B/M	† TeledyneS	
Binary Up/Down	374A/C	TeledyneS	
Counters, Decade			
Decade	MC684	Motorola	20
	371A/C	TeledyneS	
	371B/M	† TeledyneS	
Decade Up/Down	373A/C	† TeledyneS	
	373B/M	† TeledyneS	
Decoders			
BCD to Decimal, Open Collector	381A/C	TeledyneS	25
	381B/M	† TeledyneS	
Decoders/Drivers			
BCD to Decimal Decoder/Lamp Driver, Open Collector	380B/M	† TeledyneS	
BCD to Decimal (for gas discharge display tubes)	MC676	Motorola	
	382A/C	TeledyneS	
	382B/M	† TeledyneS	30
BCD to Seven Segment	383A/C	TeledyneS	
	383B/M	† TeledyneS	
Quad 2-Input Power, Open Collector	302A/C	TeledyneS	
	302B/M	† TeledyneS	
Drivers			
BCD to Decimal Decoder/Lamp Driver, Open Collector	380A/C	TeledyneS	35
Dual Power and Driver, Open Collector and Open Emitter (schmitt trigger)	MC699	Motorola	
Dual 4-Input Line Driver, Expandable	MC662	Motorola	
Dual 5-Input Power NAND Driver	301A/C	TeledyneS	
	301B/M	† TeledyneS	
Flip-Flops, D-Type			
Quad	370A/C	TeledyneS	40
	370B/M	† TeledyneS	
Flip-Flops, J-K Type			
Master-Slave or Reset	311A/C	TeledyneS	
	311B/M	† TeledyneS	
Dual or Set-Reset	MC688	Motorola	
	312A/C	TeledyneS	45
	312B/M	† TeledyneS	
	313A/C	TeledyneS	
	313B/M	† TeledyneS	
Dual with Reset	MC663	Motorola	
Flip-Flops, R-S Type			
Master-Slave	MC664	Motorola	50
Gates, AND			
Dual 2-Input Interface Buffer	391	TeledyneS	
Dual 4-Input Interface Buffer	390	TeledyneS	
Gates, NAND			
Dual 2-Input Interface Buffer	392	TeledyneS	
Dual 4-Input	MC660	Motorola	
	MC661	Motorola	55
Dual 4-Input Interface Buffer	395	TeledyneS	
Dual 5-Input	322A/C	TeledyneS	
	322B/M	† TeledyneS	
Triple 3-Input	MC670	Motorola	
	MC671	Motorola	60
Quad 2-Input	MC668	Motorola	
	MC672	Motorola	
	303A/C	TeledyneS	
	303B/M	† TeledyneS	
	321A/C	TeledyneS	65
	321B/M	† TeledyneS	
	324A/C	TeledyneS	
	324B/M	† TeledyneS	
Quad 2-Input, Open Collector	323A/C	TeledyneS	
	323B/M	† TeledyneS	70
Quad 2-Input (Schmitt trigger)	MC693	Motorola	
2,2,3,3-Input	325A/C	TeledyneS	
	325B/M	TeledyneS	
	326A/C	TeledyneS	
	326B/M	TeledyneS	75
4, 3, 4-Input	304A/C	TeledyneS	
	304B/M	† TeledyneS	
Gates, AND-OR-Invert			
Expandable	344A/C	TeledyneS	
Dual 2-Wide, 2-Input	MC673	Motorola	
	MC674	Motorola	80
	341A/C	TeledyneS	
	341B/M	† TeledyneS	
Gates, OR			
Dual 2-Input Interface Buffer	393	TeledyneS	
Gates, NOR			
Dual 2-Input Interface Buffer	394	TeledyneS	
Quad 2-Input	306A/C	TeledyneS	85
Quad 2-Input, Open Collector	307A/C	TeledyneS	
Gates, Exclusive OR			
Dual 2-Wide, 2-Input AND-OR-Invert, Expandable	MC683	Motorola	
Gates, Miscellaneous			
Dual 4-Input Expander (for 600 series)	MC669	Motorola	
Dual 5-Input Expander (for 300 series)	331A/C	TeledyneS	
	331B/M	† TeledyneS	90
Hex Inverter/Gate (quad inverter, dual NAND)	333A/C	TeledyneS	
	333B/M	† TeledyneS	
Latches			
Quad	MC682	Motorola	
Multiplexers (Digital)			
Dual 4-Bit	351A/C	TeledyneS	
8-Bit	350A/C	TeledyneS	95
Multivibrators			
Dual Monostable	MC667	Motorola	
	342A/C	TeledyneS	
	342B/M	† TeledyneS	
Dual Retriggerable Monostable	347A/C	TeledyneS	
	347B/M	† TeledyneS	100
Shift Registers			
4-Bit Parallel-In Parallel-Out	MC686	Motorola	
	375A/C	TeledyneS	
	375B/M	† TeledyneS	
Translators			
LSL-TTL Level Converter	FZH165B	Siemens	
Dual High to Low Interface (HNL to DTL, TTL)	361A/C	TeledyneS	105
	361B/M	† TeledyneS	
Dual Interface Element, (line driver, receiver, ECL to TTL, MOS to TTL, Schmitt trigger)	MC696	Motorola	
	396AC	TeledyneS	
Dual Low to High Interface (TTL to HNL)	362A/C	TeledyneS	
	362B/M	† TeledyneS	110

† Military Temperature Range (−55° to 125°C)

* Typical Value

Bold face indicates additional data is provided on the page noted.

DIGITAL-HNIL/HTL (Cont'd)

Function	Device	Source	Line
Translators (Cont'd)			
Triple High to Low (HTL to TTL)			
	MC665	Motorola	
Triple Low to High (TTL to HTL)			
	MC666	Motorola	
Quad Low to High Interface (TTL to HNL)			
	363A/C	TeledyneS	
	363B/M	† TeledyneS	
Hex Inverter/Interface (low to high: TTL, CMOS to HTL, CMOS)	MC691	Motorola	5
Miscellaneous			
Timer (see also linear-timers)			
	355A/C	TeledyneS	
Dual Pulse Stretcher			
	MC675	Motorola	
	349A/C	TeledyneS	
Quad Schmitt Trigger/Line Receiver			
	367A/C	TeledyneS	
	367B/M	† TeledyneS	10
Quad Schmitt Trigger/Line Receiver, Open Collector			
	368A/C	TeledyneS	

† Military Temperature Range (−55° to 125°C)

* Typical Value

Bold face indicates additional data is provided on the page noted.

DIGITAL-TTL

Arithmetic Functions

Function	Device	Source	Line
Multiplier/Divider, (8x8) Microprocessor Co-processor			
TTL-S	SN54S508	† MMI	
Adder (natural binary coded decimal)			
TTL	MC4056	Motorola	
	MC4356	† Motorola	
	MC74456	Motorola	
Adder/Subtractor Quad Serial			
TTL-F	**54F385**	† **Fairchild (611,1025)**	5
	74F385	**Fairchild (1025,5310)**	
	74F385	**Signetics (1158)**	
TTL-LS	AM25LS15C	AMD	
	AM25LS15M	† AMD	
	SN54LS385	† AMD	10
	SN74LS385	AMD	
	SN54LS385	† **Motorola (1132)**	
	SN74LS385	**Motorola (1132)**	
	SN54LS385	† **TI (716)**	
	SN74LS385	TI	15
Adder, 4-Bit BCD			
TTL-S	**N82S83**	† **Signetics (1175)**	
Arithmetic Logic/Multiplier, Floating Point Set/TTL(N)			
	WTL104A	Weitek	
	WTL1064A	† Weitek	
	WTL1065A	† Weitek	
	WTL1164A	† Weitek	20
	WTL1165A	† Weitek	
	WTL1264A	† Weitek	
	WTL1265A	† Weitek	
Arithmetic Logic Unit, Fixed/Floating Point			
TTL(N)	WTL1033AC	Weitek	
	WTL1033AM	† Weitek	25
Arithmetic Logic Unit, Floating Point			
TTL(N)	WTL1032A	† Weitek	
	WTL1032AC	Weitek	
	WTL1032AM	† Weitek	
	WTL1033A	† Weitek	
Barrel Shifter, 16-Bit, Expandable			
TTL-AS	**SN74AS897**	**TI (1288)**	30
Comparator, Address			
TTL-ALS	SN74ALS677	TI	
	SN74ALS678	TI	
	SN74ALS679	TI	
	SN74ALS680	TI	
Comparator, Registered			
TTL-F	**54F524**	† **Fairchild (1026)**	35
	74F524	† **Fairchild (1026,5310)**	
	74F524	† **Signetics (1159)**	
Comparator, Dual 4-Bit Magnitude			
TTL	MC4021	Motorola	
	MC4022	Motorola	
	MC4321	† Motorola	40
	MC4322	† Motorola	
Comparator, 4-Bit Magnitude			
TTL	TD3502A	Toshiba	
Comparator, 4-Bit Magnitude, Separate A=B Output			
TTL	**5485**	† **Fairchild (616)**	
	54LS85	† **Fairchild (608,612,621,623)**	
	7485	Fairchild	45
	74LS85	**Fairchild (5311)**	
	9324C	**Fairchild (617)**	
	9324M	† **Fairchild (617)**	
	GD74LS85	**Goldstar (1066)**	
	HD74LS85	Hitachi	50
	MC7485	Motorola	
	MC8324	Motorola	
		(Continued)	
Comparator, 4-Bit Magnitude, Separate A=B Output			
TTL		(Cont'd)	
	MC9324	† Motorola	
	SN54LS85	† **Motorola (1131)**	
	SN74LS85	**Motorola (1131)**	55
	DM5485	† National	
	DM54LS85	† National	
	DM7485	National	
	DM74LS85	National	
	DN74LS85	Panasonic	60
	54LS85	† SGS	
	74LS85	SGS	
	5485	† Signetics	
	54LS85	† Signetics	
	7485	**Signetics (1156)**	65
	74LS85	**Signetics (1156)**	
	N9324	**Signetics (1175)**	
	SN5485	† **TI (712)**	
	SN54LS85	† **TI (715)**	
	SN7485	TI	70
	SN74LS85	TI	
TTL-F	**54F85**	† **Fairchild (1026)**	
	74F85	Fairchild	
	74F85	**Signetics (1156)**	
TTL-S	**GD74S85**	**Goldstar (1066)**	75
	54S85	† Signetics	
	74S85	**Signetics (1156)**	
	SN54S85	† **TI (716)**	
	SN74S85	TI	
Comparator, 6-Bit Identity			
TTL	DM7160	† National	80
	DM8160	National	
TTL-S	93S46M	† Fairchild	
	93S46C	Fairchild	
Comparator, 6-Bit Identity, Open Collector			
TTL-S	93S47C	Fairchild	
	93S47M	† Fairchild	85
Comparator, 6-Bit, Unified Bus, Active Pull Up			
TTL	DM7131	† National	
	DM8131	National	
Comparator, 6-Bit, Unified Bus, Open Collector			
TTL	DM7136	† National	
	DM8136	National	
Comparator, 8-Bit			
TTL-ALS	DM54ALS520	† National	90
	DM54ALS521	† National	
	DM54ALS522	† National	
	DM74ALS520	National	
	DM74ALS521	National	
	DM74ALS522	National	95
	SN54ALS520	† **TI (713)**	
	SN74ALS520	TI	
	SN74ALS521	TI	
	SN74ALS522	TI	
TTL-F	**54F521**	† **Fairchild (611,623,1026)**	100
	74F521	**Fairchild (1026,5310)**	
	MC54F521	† **Motorola (1131)**	
	MC74F521	**Motorola (1131)**	
	54F521	† Signetics	
	74F521	**Signetics (1159)**	105
TTL-LS	AM25LS2521C	AMD	
	AM25LS2521M	† AMD	
Comparator, 8-Bit Identity, Fuse Programmable plus 4-Bit Comparator			
TTL-ALS	SN74ALS527	TI	
Comparator, 8-Bit Magnitude Open Collector			
TTL-ALS	DM54ALS518	† National	
	DM54ALS689	† National	110
	DM74ALS518	National	
		(Continued)	
Comparator, 8-Bit Magnitude Open Collector			
TTL-ALS		(Cont'd)	
	DM74ALS519	National	
	DM74ALS689	National	
	SN74ALS518	TI	
	SN74ALS519	TI	115
	SN74ALS689	TI	
TTL-LS	**SN54LS683**	† **Motorola (1131)**	
	SN54LS685	† **Motorola (1132)**	
	SN54LS687	† **Motorola (1132)**	
	SN54LS689	† **Motorola (1132)**	120
	SN74LS683	**Motorola (1131)**	
	SN74LS685	**Motorola (1132)**	
	SN74LS687	**Motorola (1132)**	
	SN74LS689	**Motorola (1132)**	
	SN54LS683	† **TI (716)**	125
	SN54LS685	† **TI (716)**	
	SN54LS689	† **TI (716)**	
	SN74LS683	TI	
	SN74LS685	TI	
	SN74LS687	TI	130
	SN74LS689	TI	
Comparator, 8-Bit Magnitude Totem-Pole			
TTL-ALS	**SN54ALS688**	† **TI (713)**	
	SN74ALS688	TI	
TTL-AS	**SN54AS885**	† **TI (714)**	
	SN74AS885	TI	135
TTL-LS	**SN54LS682**	† **Motorola (1131)**	
	SN54LS684	† **Motorola (1131)**	
	SN54LS686	† **Motorola (1132)**	
	SN54LS688	† **Motorola (1131)**	
	SN74LS682	**Motorola (1131)**	140
	SN74LS684	**Motorola (1131)**	
	SN74LS686	**Motorola (1132)**	
	SN74LS688	**Motorola (1131)**	
	SN54LS682	† **TI (716)**	
	SN54LS684	† **TI (716)**	145
	SN54LS688	† **TI (716)**	
	SN74LS682	TI	
	SN74LS684	TI	
	SN74LS686	TI	
	SN74LS688	TI	150
Comparator, 9-Bit Equal to			
TTL-S	AM29809C	AMD	
	AM29809M	† AMD	
Comparator, 10-Bit Identity			
TTL	DM7130	† National	
	DM8130	National	
Cycle Redundancy Check (CRC) Generator/Checker			
TTL-F	**54F401**	† **Fairchild (1028)**	155
	74F401	**Fairchild (1028,5310)**	
Fast Carry Extender (for 8260)			
TTL	MC7261	Motorola	
	MC8261	† Motorola	
	RC8261	Raytheon	
Full Adder, Gated			
TTL	5480	† Fairchild	160
	MC7480	Motorola	
	SN7480	TI	
Full Adder, BCD with Fast Carry			
	54F583	† **Fairchild (611,1025)**	
	74F583	**Fairchild (1025,5310)**	
	74F583	**Signetics (1159)**	165
Full Adder, Dual			
TTL	9304C	Fairchild	
	9304M	† Fairchild	
	MC8304	Motorola	
	MC9304	Motorola	
		(Continued)	

† Military Temperature Range (−55° to 125°C)

* Typical Value

Bold face indicates additional data is provided on the page noted.

DIGITAL-TTL (Cont'd)

Function	Device	Source	Line
Arithmetic Functions (Cont'd)			
Full Adder, Dual (Cont'd)			
TTL-H	54H183	† Fairchild	
	74H183	Fairchild	
	SN74H183	TI	
TTL-LS	**SN54LS183**	† **Motorola** (1132)	
	SN74LS183	**Motorola** (1132)	5
	SN54LS183	† TI	
	SN74LS183	TI	
Full Adder, 2-Bit Binary			
TTL	5482	† Fairchild	
	7482	Fairchild	
	MC7482	Motorola	10
	SN5482	† **TI** (712)	
	SN7482	TI	
Full Adder, 4-Bit with Output Latch			
TTL	AM2506M	† AMD	
Logic Element			
TTL	MC7260	Motorola	
	MC8260	† Motorola	15
	RC8260	Raytheon	
	RM8260	† Raytheon	
Logic Unit/Function Generator			
TTL	54181	† Fairchild	
	9341C	Fairchild	
	9341M	† Fairchild	20
	MC74181	Motorola	
	DM54181	† National	
	54181	† Signetics	
	74181	**Signetics** (1157)	
	SN54181	† **TI** (712)	25
	SN74181	TI	
TTL-AS	DM54AS181B	† National	
	DM54AS881B	† National	
	DM74AS181B	National	
	DM74AS881B	National	30
	SN54AS181A	† **TI** (713)	
	SN54AS1881	† TI	
	SN54AS881B	† **TI** (714)	
	SN74AS181A	TI	
	SN74AS1881	TI	35
	SN74AS881A	TI	
TTL-F	**54F181**	† **Fairchild** (1026)	
	54F381	† **Fairchild** (1026)	
	54F382	† **Fairchild** (1026)	
	74F181	**Fairchild** (1026,5310)	40
	74F381	**Fairchild** (1026,5310)	
	74F382	**Fairchild** (1026,5310)	
	MC54F181	† **Motorola** (1132)	
	MC54F381	† **Motorola** (1132)	
	MC54F382	† Motorola	45
	MC74F181	**Motorola** (1132)	
	MC74F381	**Motorola** (1132)	
	MC74F382	Motorola	
	54F181	† Signetics	
	74F181	**Signetics** (1157)	50
	74F381	**Signetics** (1158)	
	74F382	**Signetics** (1158)	
	74F881	**Signetics** (1160)	
TTL-LS	AM25LS2517C	AMD	
	AM25LS2517M	AMD	55
	54LS181	† **Fairchild** (613)	
	74LS181	**Fairchild** (5311)	
	HD74LS181	Hitachi	
	SN54LS181	† **Motorola** (1132)	
	SN74LS181	**Motorola** (1132)	60
	54LS181	† SGS	
	74LS181	SGS	
		(Continued)	

Function	Device	Source	Line
Logic Unit/Function Generator			
TTL-LS		(Cont'd)	
	54LS181	† Signetics	
	74LS181	**Signetics** (1157)	
	SN54LS181	† TI	65
	SN54LS381A	† **TI** (715)	
	SN54LS382	† **TI** (716)	
	SN74LS181	TI	
	SN74LS381A	TI	
	SN74LS382	TI	70
TTL-S	93S41C	Fairchild	
	93S41M	† Fairchild	
	SN54S381	† **MMI** (1103)	
	SN74S381	† **MMI** (1103)	
	54S181	† Signetics	75
	74S181	**Signetics** (1157)	
	SN54S181	† **TI** (716)	
	SN54S381	† **TI** (716)	
	SN74S181	TI	
	SN74S381	TI	80
Look-Ahead Carry Generator			
TTL	AM2902AC	AMD	
	AM2902AM	† AMD	
	54182	† Fairchild	
	9342C	Fairchild	
	9342M	† Fairchild	85
	MC74182	Motorola	
	SN54182	† **TI** (712)	
	SN74182	TI	
TTL-AS	DM54AS182	† National	
	DM54AS264	† National	90
	DM54AS282	† National	
	DM74AS182	National	
	DM74AS264	National	
	DM74AS282	National	
	SN54AS182	† **TI** (713)	95
	SN54AS882	† **TI** (714)	
	SN74AS182	TI	
	SN74AS264	TI	
	SN74AS282	TI	
	SN74AS882	TI	100
TTL-F	**54F182**	† **Fairchild** (1027)	
	74F182	**Fairchild** (1027,5310)	
	MC54F182	† **Motorola** (1132)	
	MC74F182	**Motorola** (1132)	
	74F182	**Signetics** (1157)	105
	74F882	**Signetics** (1160)	
TTL-LS	**SN54LS182**	† **Motorola** (1132)	
	SN74LS182	**Motorola** (1132)	
TTL-S	SN74S182	AMD	
	93S42C	Fairchild	110
	93S42M	† Fairchild	
	SN54S182	† MMI	
	SN54S382	† **MMI** (1103)	
	SN74S182	MMI	
	SN74S382	**MMI** (1103)	115
	DM74S182	National	
	54S182	† Signetics	
	74S182	**Signetics** (1157)	
	SN54S182	† **TI** (716)	
	SN74S182	TI	120
Multiplier/Divider, (8x8) Microprocessor Co-processor			
TTL-S	**SN74S508**	† **MMI** (1103)	
Multiplier/Divider (8-Bit, with latch)			
TTL-F	54F559	† Fairchild	
	74F559	† Fairchild	
Multiplier/Divider, (16x16)			
	SN54S516	† MMI	
	SN74S516	**MMI** (1103)	125

Function	Device	Source	Line
Multiplier, Unsigned Magnitude, 2's Complement or Mixed Operands, (8x8)			
TTL-S	AM25S557C	AMD	
Multiplier (2x4, Binary Parallel, Serial Output			
TTL-LS	54LS261	† Signetics	
	SN54LS261	† **TI** (715)	
	SN74LS261	† TI	
Multiplier (4x2), Binary			
TTL	9344M	† Fairchild	130
Multiplier (4x4), Binary Parallel (used with 54/74284)			
TTL	DM54284	† National	
	SN54284	† **TI** (712)	
	SN54285	† **TI** (712)	
	SN74285	TI	
Multiplier (4x4), Binary Three-State			
TTL-S	SN74S274	TI	135
Multiplier (4x2), 2's Complement			
TTL	RC2505	Raytheon	
	RM2505	† Raytheon	
TTL-S	AM25S05C	AMD	
	AM25S05M	† AMD	
	93S43C	Fairchild	140
	93S43M	† Fairchild	
Multiplier (4x4), Binary Parallel (used with 54/74284)			
TTL	SN74284	TI	
Multiplier, 4-Bit Three-State (two ICs to a set, 7875A and 7875B)			
TTL	DM7875	† National	
	DM8875	National	
Multiplier (8x1) Serial/Parallel 2's Complement			
TTL-LS	AM25LS14AC	AMD	145
	AM25LS14AM	† AMD	
	AM25LS14C	AMD	
	AM25LS14M	† AMD	
	SN54LS384	† AMD	
	SN74LS384	AMD	150
	SN74LS384	TI	
Multiplier (8x8), Unsigned Magnitude			
TTL	MPY08HU	† TRW-LSI	
Multiplier (8x8), 2's Complement			
TTL	57558-1	† MMI	
	MPY008H	† TRW-LSI	
	MPY008H-1	† TRW-LSI	155
Multiplier, 8-Bit Parallel Byte			
TTL	SBP9708C	TI	
	SBP9708M	† TI	
Multiplier (12x12), 2's Complement & Unsigned Magnitude, 16-Bit Product			
TTL	MPY112K	† TRW-LSI	
Multiplier (12x12), 2's Complement, Unsigned Magnitude			
TTL	MPY012H	TRW-LSI	
Multiplier (16x16), High Speed			
TTL-S	CY7C516	† Cypress	160
	CY7C517	† Cypress	
Multiplier (16x16), 2's Complement and Unsigned Magnitude			
TTL	MPY016H	† TRW-LSI	
	MPY016K	† TRW-LSI	
	MPY016K-1	† TRW-LSI	
Multiplier-Accumulator (12x12)			
TTL	AM29L509	AMD	165
Multiplier-Accumulator (16x16)			
TTL	AM29L510	AMD	
	MP1010C	† **MicroPwr** (688)	
Register/Arithmetic Logic Unit			
TTL-LS	**SN54LS681**	† **TI** (716)	
	SN74LS681	TI	
TTL-S	DM74S281	National	170
	SN54S281	† **TI** (716)	
	SN74S281	TI	

† Military Temperature Range (−55° to 125°C)

* Typical Value

Bold face indicates additional data is provided on the page noted.

DIGITAL–TTL (Cont'd)

Function	Device	Source	Line
Arithmetic Functions (Cont'd)			
4-Bit Microprocessor Slice (ALU)			
TTL-F	**29F01C**	**Fairchild (1028)**	
	29F01M	**† Fairchild (1028)**	
TTL-S	AM2901AC	AMD	
	AM2901AM	† AMD	
	AM2901BC	AMD	5
	AM2901BM	† AMD	
	AM2901C	AMD	
	AM2901M	† AMD	
	AM2903C	AMD	
	AM2903M	† AMD	10
	3002	Intel	
	ADM2901AC	National	
	IDM2901AM	† National	
	N3002	Signetics	
	S3002	† Signetics	15
	SFC-2901B	ThomsonCSF	
4-Bit ALU with Look-Ahead Carry			
TTL	9340C	Fairchild	
	9340M	† Fairchild	
4-Bit Binary Full Adder, Look-Ahead Carry			
TTL	54283	† Fairchild	
	5483	**† Fairchild (609,616,622,623)**	20
	74283	Fairchild	
	7483	Fairchild	
	MC7483	Motorola	
	DM5483	† National	
	DM7483	National	25
	5483	† Signetics	
	7483	**Signetics (1156)**	
	SN54283	**† TI (712)**	
	SN5483A	**† TI (712)**	
	SN74283	TI	30
	SN7483A	TI	
TTL-F	**54F283**	**† Fairchild (607,611,620,623,1025)**	
	74F283	**Fairchild (1025,5310)**	
	MC54F283	**† Motorola (1132)**	
	MC74F283	**Motorola (1132)**	35
	74F283	**Signetics (1158)**	
TTL-LS	**54LS283**	**† Fairchild (608,614,622,623)**	
	54LS83A	**† Fairchild (608,612,621,623)**	
	74LS283	**Fairchild (5311)**	
	74LS83	**Fairchild (5311)**	40
	GD74LS283	**Goldstar (1066)**	
	HD74LS283A	Hitachi	
	HD74LS83A	Hitachi	
	SN54LS283	**† Motorola (1132)**	
	SN54LS83A	**† Motorola (1132)**	45
	SN74LS283	**Motorola (1132)**	
	SN74LS83A	**Motorola (1132)**	
	DM54LS283	† National	
	DM54LS83A	† National	
	DM74LS283	National	50
	DM74LS83A	National	
	DN74LS283	Panasonic	
	DN74LS83A	Panasonic	
	54LS283	† SGS	
	54LS83A	† SGS	55
	74LS283	SGS	
	74LS83A	SGS	
	54LS283	† Signetics	
	54LS83A	† Signetics	
	74LS283	**Signetics (1158)**	60
	74LS83A	**Signetics (1156)**	
	SN54LS283	**† TI (715)**	
	SN54LS83A	**† TI (715)**	
		(Continued)	
4-Bit Binary Full Adder, Look-Ahead Carry			
TTL-LS		(Cont'd)	
	SN74LS283	TI	
	SN74LS83A	TI	65
TTL-S	**SN54S283**	**† TI (716)**	
	SN74S283	TI	
4-Bit BCD (add, subtract, compare)			
TTL-S	**N82S82**	**Signetics (1175)**	
8-Bit Magnitude			
TTL-AS	**SN54AS866**	**† TI (713)**	
	SN74AS866	TI	70
8-Bit Serial/Parallel Register (for use with 25LS14/74LS384)			
TTL-LS	AM25LS22C	AMD	
	AM25LS22M	† AMD	
	SN54LS322	† AMD	
	SN74LS322	AMD	
	54LS322	**† Fairchild (614)**	75
	GD74LS322	**Goldstar (1066)**	
	SN54LS322A	**† Motorola (1129)**	
	SN74LS322A	**Motorola (1129)**	
	SN54LS322A	**† TI (715)**	
	SN74LS322A	TI	80
Buffers			
Octal Buffer/Driver, Inverting			
TTL-ALS	SN74ALS763	TI	
Octal Buffer/Driver, Inverting and Non-Inverting			
TTL-ALS	SN74ALS762	TI	
Octal Buffer/Line Driver, Inverting Output			
TTL-ALS	SN74ALS742	TI	
Octal Buffer/Line Driver, Non-Inverting Output			
TTL-ALS	SN74ALS743	TI	
Octal Bus Driver, Inverting with Pull-Up Resistors			
TTL-ALS	SN74ALS746	TI	85
	SN74ALS746-1	TI	
Octal Bus Driver, Non-Inverting with Pull-Up Resistors			
TTL-ALS	SN74ALS747	TI	
	SN74ALS747-1	TI	
Quad Gated, Three-State			
TTL	**54125**	**† Fairchild (616)**	
	74125	Fairchild	90
	DM54125	† National	
	DM7093	† National	
	DM74125	National	
	DM8093	National	
	54125	† Signetics	95
	74125	**Signetics (1157)**	
	SN54125	**† TI (712)**	
	SN74125	TI	
	SN74425	TI	
TTL-F	**74F125**	**Signetics (1157)**	100
TTL-LS	**54LS125A**	**† Fairchild (612)**	
	74LS125	**Fairchild (5311)**	
	GD74LS125A	**Goldstar (1066)**	
	HD74LS125A	Hitachi	
	SN54LS125A	**† Motorola (1124)**	105
	SN74LS125A	**Motorola (1124)**	
	DM54LS125A	† National	
	DM74LS125A	National	
	DN74LS125A	Panasonic	
	54LS125A	† SGS	110
	74LS125A	SGS	
	54LS125A	† Signetics	
	74LS125A	**Signetics (1157)**	
	SN54LS125A	**† TI (715)**	
	SN74LS125A	TI	115
Quad Gated, Three-State (inverted control)			
TTL	54126	† Fairchild	
	74126	Fairchild	
	DM7094	† National	
	DM8094	National	
	54126	† Signetics	120
	74126	**Signetics (1157)**	
	SN54126	**† TI (712)**	
	SN74126	TI	
	SN74426	TI	
TTL-F	**74F126**	**Signetics (1157)**	125
TTL-LS	**54LS126**	**† Fairchild (612)**	
	74LS126	**Fairchild (5311)**	
	GD74LS126	**Goldstar (1066)**	
	HD74LS126A	Hitachi	
	SN54LS126A	**† Motorola (1124)**	130
	SN74LS126A	**Motorola (1124)**	
	DM54LS126	† National	
	DM74LS126	National	
	54LS126	† SGS	
	74LS126	SGS	135
	54LS126A	† Signetics	
	74LS126A	**Signetics (1157)**	
	SN54LS126A	**† TI (715)**	
	SN74LS126A	TI	
Hex Driver, Non-inverting			
TTL-AS	DM54AS1034	† National	140
	DM74AS1034	National	
	SN54AS1034	**† TI (714)**	
	SN74AS1034A	TI	
Hex, Noninverter			
TTL-ALS	SN74ALS34	TI	
TTL-AS	DM54AS34	† National	145
	DM74AS34	National	
	SN74AS34	TI	
Hex, Open Collector			
TTL-ALS	DM54ALS1035	† National	
	DM74ALS1035	National	
	SN74ALS1035	TI	150
TTL-LS	**GD74LS07**	**Goldstar (1066)**	
	GD74LS17	**Goldstar (1066)**	
Hex, Open Collector, Noninverter			
TTL-ALS	SN74ALS35A	TI	
Hex, Three-State			
TTL	DM54365	† National	
	DM54367	† National	155
	DM7095	† National	
	DM7097	† National	
	DM74366	National	
	DM74367	National	
	DM8095	National	160
	DM8097	National	
	54365A	† Signetics	
	54367A	† Signetics	
	74365	**Signetics (1158)**	
	74367	**Signetics (1158)**	165
	SN54365A	**† TI (712)**	
	SN54367A	**† TI (712)**	
	SN74365A	TI	
	SN74367A	TI	
TTL-ALS	DM54ALS1034	† National	170
	DM74ALS1034	National	
	SN54ALS1034	**† TI (713)**	
	SN74ALS1034	TI	
TTL-AS	DM54AS1034	† National	
	DM74AS1034	National	175
	SN54AS1034	**† TI (714)**	
	SN74AS1034A	TI	
TTL-F	**54F365**	**† Fairchild (1024)**	
	54F367	**† Fairchild (1024)**	
	74F365	**Fairchild (1024)**	180
		(Continued)	

† Military Temperature Range (−55° to 125°C)

* Typical Value

Bold face indicates additional data is provided on the page noted.

DIGITAL–TTL (Cont'd)

Buffers (Cont'd)

Function	Device	Source	Line
Hex, Three-State			
TTL-F		(Cont'd)	
	74F367	**Fairchild (1024)**	
	54F365	† Signetics	
	54F367	† Signetics	
	74F365	Signetics	
	74F367	**Signetics (1158)**	5
TTL-LS	**54LS365**	**† Fairchild (608,614,622,623)**	
	54LS367	**† Fairchild (608,614,622,623)**	
	74LS365	**Fairchild (5311)**	
	74LS367	**Fairchild (5311)**	
	FD74LS367A	Goldstar	10
	GD74LS365A	**Goldstar (1066)**	
	HD74LS365A	Hitachi	
	HD74LS367A	Hitachi	
	SN54LS365A	**† Motorola (1124)**	
	SN54LS367A	**† Motorola (1124)**	15
	SN74LS365A	**Motorola (1124)**	
	SN74LS367A	**Motorola (1124)**	
	DM54LS365A	† National	
	DM54LS367A	† National	
	DM74LS365A	National	20
	DM74LS367A	National	
	DN74LS365A	Panasonic	
	DN74LS367A	Panasonic	
	54LS365	† SGS	
	54LS367	† SGS	25
	74LS365A	SGS	
	74LS367A	SGS	
	T74LS365A	SGS	
	T74LS367A	SGS	
	54LS365A	† Signetics	30
	54LS367A	† Signetics	
	74LS365A	**Signetics (1158)**	
	74LS367A	**Signetics (1158)**	
	SN74LS365A	TI	
	SN74LS367A	TI	35
TTL-S	**MC8T95**	**Motorola (3209)**	
	MC8T97	**Motorola (3209)**	
	N8T95	**Signetics (1175)**	
	N8T97	**Signetics (1175)**	
	S8T97	† Signetics	40
Octal Buffer/Latch, Three-State			
TTL	MC6482	Motorola	
	MC6482A	Motorola	
	MC6482B	Motorola	
Octal, with Parity Generator-Checker			
TTL-F	**54F656**	**† Fairchild (1024)**	
	74F656	**Fairchild (1024)**	45
	54F656	† Signetics	
	74F656	**Signetics (1159)**	
Octal, Three-State			
TTL-ALS	DM54ALS465	† National	
	DM54ALS467	† National	
	DM74ALS465	National	50
	DM74ALS467	National	
	SN74ALS465A	TI	
	SN74ALS467A	TI	
TTL-LS	AM81LS95	AMD	
	AM81LS97	AMD	55
	SN54LS795	**† Motorola (1124)**	
	SN54LS796	**† Motorola (1125)**	
	SN54LS797	**† Motorola (1125)**	
	SN54LS798	**† Motorola (1125)**	
	SN74LS795	**Motorola (1124)**	60
	SN74LS796	**Motorola (1125)**	
	SN74LS797	**Motorola (1125)**	
	SN74LS798	**Motorola (1125)**	

(Continued)

Function	Device	Source	Line
Octal, Three-State			
TTL-LS		(Cont'd)	
	DM71LS95	† National	
	DM71LS97	† National	65
	DM81LS95	National	
	DM81LS97	National	
	SN74LS465	TI	
	SN74LS467	TI	
10-Bit (bus interface)			
TTL-F	**54F827**	**† Fairchild (1024)**	70
	74F827	**Fairchild (1024)**	
	74F827	**Signetics (1160)**	
TTL-S	AM29827	AMD	
	AM29828	AMD	

Inverters

Function	Device	Source	Line
Hex			
TTL	**5404**	**† Fairchild (609,616,622,623)**	75
	7404	Fairchild	
	MC7404	Motorola	
	DM5404	† National	
	DM7404	National	
	5404	† Signetics	80
	7404	**Signetics (1156)**	
	N8890	**Signetics (1175)**	
	N8891	**Signetics (1175)**	
	S8891	† Signetics	
	SN5404	**† TI (712)**	85
	SN7404	TI	
TTL-ALS	DM54ALS04	† National	
	DM54ALS1004	† National	
	DM74ALS04	National	
	DM74ALS1004	National	90
	SN54ALS04A	**† TI (712)**	
	SN74ALS04B	TI	
	SN74ALS1004	TI	
TTL-AS	DM54AS04	† National	
	DM54AS1004	† National	95
	DM74AS04	National	
	DM74AS1004	National	
	SN54AS04	† TI	
	SN54AS1004	**† TI (714)**	
	SN74AS04	TI	100
	SN74AS1004	TI	
TTL-F	**54F04**	**Fairchild (607,610,620,623,1021)**	
	74F04	**Fairchild (1021,5310)**	
	MC54F04	**Motorola (1124)**	
	MC74F04	**Motorola (1124)**	105
	54F04	Signetics	
	74F04	**Signetics (1156)**	
TTL-H	54H04	† Fairchild	
	74H04	Fairchild	
	DM54H04	† National	110
	DM74H04	National	
	SN74H04	TI	
TTL-LS	**54LS04**	**† Fairchild (607,612,621,623)**	
	74LS04	**Fairchild (5311)**	
	GD74LS04	**Goldstar (1066)**	115
	HD74LS04	Hitachi	
	SN54LS04	**† Motorola (1124)**	
	SN74LS04	**Motorola (1124)**	
	DM54LS04	† National	
	DM74LS04	National	120
	DN74LS04	Panasonic	
	54LS04	† SGS	
	74LS04	SGS	
	54LS04	† Signetics	

(Continued)

Function	Device	Source	Line
Hex			
TTL-LS		(Cont'd)	
	74LS04	**Signetics (1156)**	125
	SN54LS04	**† TI (715)**	
	SN74LS04	TI	
TTL-S	54S04	† Fairchild	
	74S04	Fairchild	
	GD74S04	**Goldstar (1066)**	130
	DM54S04	† National	
	DM74S04	National	
	54S04	† Signetics	
	74S04	**Signetics (1156)**	
	SN54S04	**† TI (716)**	135
	SN74S04	TI	
Hex, Open Collector			
TTL	5405	† Fairchild	
	7405	Fairchild	
	MC7405	Motorola	
	DM5405	† National	140
	DM7405	National	
	5405	† Signetics	
	7405	**Signetics (1156)**	
	S8T90	† Signetics	
	SN5405	**† TI (712)**	145
	SN7405	TI	
TTL-ALS	M74ALS05	Mitsubishi	
	DM54ALS05	† National	
	DM54ALS1005	† National	
	DM74ALS05	National	150
	DM74ALS1005	National	
	SN54ALS05A	**† TI (712)**	
	SN74ALS05A	TI	
	SN74ALS1005	TI	
TTL-H	54H05	† Fairchild	155
	74H05	Fairchild	
	SN74H05	TI	
TTL-LS	**54LS05**	**† Fairchild (607,612,621,623)**	
	74LS05	**Fairchild (5311)**	
	GD74LS05	**Goldstar (1066)**	160
	GD74LS06	**Goldstar (1066)**	
	GD74LS16	**Goldstar (1066)**	
	HD74LS05	Hitachi	
	SN54LS05	**† Motorola (1124)**	
	SN74LS05	**Motorola (1124)**	165
	DM54LS05	† National	
	DM74LS05	National	
	DN74LS05	Panasonic	
	54LS05	† SGS	
	74LS05	SGS	170
	54LS05	† Signetics	
	74LS05	**Signetics (1156)**	
	SN54LS05	**† TI (715)**	
	SN74LS05	TI	
TTL-S	54S05	† Fairchild	175
	74S05	Fairchild	
	DM54S05	† National	
	DM74S05	National	
	54S05	† Signetics	
	74S05	**Signetics (1156)**	180
	SN54S05	**† TI (716)**	
	SN74S05	TI	
Hex, Three-State			
TTL	DM54366	† National	
	DM54368	† National	
	DM7096	† National	185
	DM7098	† National	
	DM74365	National	
	DM74368	National	
	DM8096	National	
	DM8098	National	190
	54366A	† Signetics	

(Continued)

† Military Temperature Range (−55° to 125°C)

* Typical Value

Bold face indicates additional data is provided on the page noted.

DIGITAL–TTL (Cont'd)

Inverters (Cont'd)

Function	Device	Source	Line
Hex Three-State			
TTL		(Cont'd)	
	54368A	† Signetics	
	74366	**Signetics (1158)**	
	74368	**Signetics (1158)**	
	SN54366A	**† TI (712)**	
	SN54368A	**† TI (712)**	5
	SN74366A	TI	
	SN74368A	TI	
TTL-ALS	SN74ALS368	TI	
TTL-F	**54F366**	**† Fairchild (1024)**	
	54F368	**† Fairchild (1024)**	10
	74F366	**Fairchild (1024)**	
	74F368	**Fairchild (1024)**	
	54F366	† Signetics	
	54F368	† Signetics	
	74F366	**Signetics (1158)**	15
	74F368	**Signetics (1158)**	
TTL-LS	**54LS366**	**† Fairchild (608,614,622,623)**	
	54LS368	**† Fairchild (608,614,622,623)**	
	74LS366	**Fairchild (5311)**	
	74LS368	**Fairchild (5311)**	20
	GD74LS366	**Goldstar (1066)**	
	GD74LS368	**Goldstar (1066)**	
	HD74LS368A	Hitachi	
	SN54LS366A	† Motorola	
	SN54LS368A	**† Motorola (1124)**	25
	SN74LS366A	**Motorola (1124)**	
	SN74LS368A	**Motorola (1124)**	
	DM54LS366A	† National	
	DM54LS368A	† National	
	DM74LS366A	National	30
	DM74LS368A	National	
	DN74LS366A	Panasonic	
	DN74LS368A	Panasonic	
	54LS366	† SGS	
	54LS368	† SGS	35
	74LS366A	SGS	
	74LS368A	SGS	
	T74LS366A	SGS	
	T74LS368A	SGS	
	54LS366A	† Signetics	40
	54LS368A	† Signetics	
	74LS366A	**Signetics (1158)**	
	74LS368A	**Signetics (1158)**	
	SN74LS366A	TI	
	SN74LS368A	TI	45
TTL-S	**MC8T96**	**Motorola (3209)**	
	MC8T98	**Motorola (3209)**	
	N8T96	**Signetics (1175)**	
	N8T98	**Signetics (1175)**	
	S8T98	† Signetics	50
Octal, with Parity Generator-Checker			
TTL-F	**54F655**	**† Fairchild (1024)**	
	74F655	**Fairchild (1024)**	
	54F655	† Signetics	
	74F655	**Signetics (1159)**	
Octal, Three-State			
TTL-ALS	DM54ALS466	† National	55
	DM54ALS468	† National	
	DM74ALS466	National	
	DM74ALS468	National	
	SN74ALS466A	TI	
	SN74ALS468A	† TI	60
TTL-LS	AM81LS96	AMD	
	AM81LS98	AMD	
	DM81LS96	National	
	DM81LS98	National	
		(Continued)	

Function	Device	Source	Line
Octal, Three-State			
TTL-LS		(Cont'd)	
	SN74LS466	TI	65
	SN74LS468	TI	
TTL-S	SN54S210	† MMI	
	DM71S96	† National	
	DM71S98	† National	
10-Bit (bus interface)			
	54F828	**† Fairchild (1024)**	70
	74F828	**Fairchild (1024)**	
	74F828	**Signetics (1160)**	

Counters, Binary Count Up

Function	Device	Source	Line
Counter/Latch (divide-by-2, 4, 8, 16), Preset Input			
TTL	54177	† Fairchild	
	54197	Fairchild	
	74177	Fairchild	75
	74197	Fairchild	
	MC7281	Motorola	
	MC74177	Motorola	
	MC74197	Motorola	
	MC8281	Motorola	80
	DM54177	† National	
	DM54197	† National	
	DM7281	† National	
	DM7291	† National	
	DM74177	National	85
	DM74197	National	
	DM8281	National	
	DM8291	National	
	RC8281	Raytheon	
	RC8291	Raytheon	90
	RM8281	† Raytheon	
	RM8291	† Raytheon	
	S8281	† Signetics	
	SN54177	**† TI (712)**	
	SN54197	**† TI (712)**	95
	SN74177	TI	
	SN74197	TI	
TTL-LS	54LS197	† Fairchild	
	74LS197	**Fairchild (5311)**	
	SN54LS197	**† Motorola (1127)**	100
	SN74LS197	**Motorola (1127)**	
	DM54LS197	† National	
	DM74LS197	National	
	DN74LS197	Panasonic	
	54LS197	† SGS	105
	74LS197	SGS	
	54LS197	† Signetics	
	74LS197	**Signetics (1157)**	
	SN54LS197	† TI	
	SN74LS197	TI	110
TTL-S	**SN54S197**	**† TI (716)**	
	SN74S197	TI	
Counter/Register with Multiplexed Output, Three-State			
TTL-LS	**SN54LS691**	**† TI (716)**	
	SN54LS693	**† TI (716)**	
	SN74LS691	TI	115
	SN74LS693	TI	
Synchronous (both conventional and three-state outputs) Preset Input			
TTL	DM7556	National	
	DM8556	National	
Synchronous, Preset Input (asynchronous clear)			
TTL	**54161**	**† Fairchild (616)**	
	74161	Fairchild	120
	9316C	**Fairchild (617)**	
	9316M	**† Fairchild (617)**	
	MC74161	Motorola	
	MC8316	Motorola	
	MC9316	† Motorola	125
		(Continued)	

Function	Device	Source	Line
Synchronous, Preset Input (asynchronous clear)			
TTL		(Cont'd)	
	DM54161A	† National	
	DM74161A	National	
	DM8316	† National	
	DM9316	National	
	54161	† Signetics	130
	74161	**Signetics (1157)**	
	N9316	**Signetics (1175)**	
	SN54161	**† TI (712)**	
	SN74161	TI	
TTL-ALS	M74ALS161A	Mitsubishi	135
	DM54ALS161	† National	
	DM74ALS161	National	
	SN54ALS161A	**† TI (713)**	
	SN74ALS161B	TI	
TTL-AS	DM54AS161	† National	140
	DM54AS162	† National	
	DM74AS161	National	
	DM74AS162	National	
	SN54AS161	**† TI (713)**	
	SN74AS161	TI	145
TTL-F	**54F161A**	**† Fairchild (610,1023)**	
	74F161A	**Fairchild (1023,5310)**	
	MC54F161A	**† Motorola (1127)**	
	MC74F161A	**Motorola (1127)**	
	74F161A	**Signetics (1157,1181)**	150
TTL-LS	**54LS161**	**† Fairchild (613)**	
	74LS161	**Fairchild (5311)**	
	GD74LS161A	**Goldstar (1066)**	
	HD74LS161A	Hitachi	
	SN54LS161A	**† Motorola (1127)**	155
	SN74LS161A	**Motorola (1127)**	
	DM54LS161A	† National	
	DM74LS161A	National	
	DN74LS161A	Panasonic	
	54LS161	† SGS	160
	74LS161	SGS	
	54LS161A	† Signetics	
	74LS161A	**Signetics (1157)**	
	SN54LS161A	**† TI (715)**	
	SN74LS161A	TI	165
TTL-S	AM93S16C	AMD	
	AM93S16M	† AMD	
	SN54S161	† AMD	
	SN74S161	AMD	
	93S16C	Fairchild	170
	93S16M	† Fairchild	
Synchronous, Preset Input (synchronous clear)			
TTL	54163	† Fairchild	
	74163	Fairchild	
	MC74163A	Motorola	
	DM54163	† National	175
	DM74163	National	
	54163	Signetics	
	74163	**Signetics (1157)**	
	SN54163	**† TI (712)**	
	SN74163	TI	180
TTL-ALS	M74ALS163A	Mitsubishi	
	DM54ALS163	† National	
	DM74ALS163	National	
	SN54ALS163A	**† TI (713)**	
	SN74ALS163B	TI	185
TTL-AS	DM54AS163	† National	
	DM74AS163	National	
	SN54AS163	**† TI (713)**	
	SN74AS163	TI	
		(Continued)	

† Military Temperature Range (−55° to 125°C)

* Typical Value

Bold face indicates additional data is provided on the page noted.

DIGITAL–TTL (Cont'd)

Counters, Binary Count Up (Cont'd)

Function	Device	Source	Line
Synchronous, Preset Input (synchronous clear) (Cont'd)			
TTL-F	**54F163A**	† **Fairchild** (610,1023)	
	74F163A	**Fairchild** (1023,5310)	
	MC54F163A	† **Motorola** (1127)	
	MC74F163A	**Motorola** (1127)	
	74F163A	**Signetics** (1157,1181)	5
TTL-LS	**54LS163A**	† **Fairchild** (613)	
	74LS163	**Fairchild** (5311)	
	TD74LS163A	Goldstar	
	HD74LS163A	Hitachi	
	SN54LS163A	† **Motorola** (1127)	10
	SN74LS163A	**Motorola** (1127)	
	DM54LS163A	† National	
	DM74LS163A	National	
	DN74LS163A	Panasonic	
	74LS163	SGS	15
	54LS163A	† Signetics	
	74LS163A	**Signetics** (1157)	
	SN54LS163A	† **TI** (715)	
	SN74LS163A	TI	
TTL-S	SN74S163	AMD	20
	GD74S163	**Goldstar** (1066)	
	SN54S163	† **TI** (716)	
	SN74S163	TI	
Dual Synchronous			
TTL	MC74453	Motorola	
Dual 4-Bit, Ripple (dual 54/7493A)			
TTL	**SN54393**	† **TI** (712)	25
	SN74393	TI	
TTL-LS	AM25LS299	AMD	
	54LS393	† Fairchild	
	74LS393	**Fairchild** (5311)	
	GD74LS393	**Goldstar** (1066)	30
	HD74LS393	Hitachi	
	SN54LS393	† **Motorola** (1127)	
	SN74LS393	**Motorola** (1127)	
	DM54LS393	† National	
	DM74LS393	National	35
	DN74LS393	Panasonic	
	T54LS393	† SGS	
	T74LS393	SGS	
	54LS393	† Signetics	
	74LS393	**Signetics** (1158)	40
	SN54LS393	† **TI** (716)	
	SN74LS393	TI	
Dual 4-Bit Binary Counter			
TTL-LS	SN74LS69	TI	
4-Bit, Ripple			
TTL	54293	† Fairchild	
	5493	† Fairchild	45
	74293	Fairchild	
	7493	Fairchild	
	9305C	Fairchild	
	9305M	† Fairchild	
	MC74293	Motorola	50
	MC7493	Motorola	
	DM5493A	† National	
	DM7493A	National	
	5493	† Signetics	
	7493	**Signetics** (1156)	55
	SN54293	† **TI** (712)	
	SN5493A	† **TI** (712)	
	SN74293	TI	
	SN7493A	TI	
	TD3505A	Toshiba	60
(Continued)			
4-Bit, Ripple (Cont'd)			
TTL-LS	54LS293	† Fairchild	
	54LS93	† Fairchild	
	74LS293	**Fairchild** (5311)	
	74LS93	**Fairchild** (5311)	
	GD74LS93	**Goldstar** (1066)	65
	HD74LS293	Hitachi	
	HD74LS93	Hitachi	
	SN54LS293	† **Motorola** (1127)	
	SN54LS93	† **Motorola** (1127)	
	SN74LS293	**Motorola** (1127)	70
	SN74LS93	**Motorola** (1127)	
	DM54LS293	† National	
	DM54LS93	† National	
	DM74LS293	National	
	DM74LS93	National	75
	DN74LS293	Panasonic	
	DN74LS93	Panasonic	
	54LS293	† SGS	
	54LS93	† SGS	
	74LS293	SGS	80
	74LS93	SGS	
	54LS293	† Signetics	
	54LS93	† Signetics	
	74LS293	**Signetics** (1158)	
	74LS93	**Signetics** (1156)	85
	SN54LS293	† **TI** (715)	
	SN54LS93	† **TI** (715)	
	SN74LS293	TI	
	SN74LS93	TI	
4-Bit Binary			
TTL-ALS	M74ALS561A	Mitsubishi	90
	SN54ALS561	† Motorola	
	SN54ALS561A	† **TI** (713)	
	SN74ALS561A	TI	
8-Bit Synchronous			
TTL-LS	**SN54LS461**	† **MMI** (1100)	
	SN74LS461	**MMI** (1100)	95
	DM54LS461	† National	
	DM74LS461	National	
8-Bit with Input Registers			
TTL-LS	**SN54LS592**	† **TI** (716)	
	SN54LS593	† **TI** (716)	
	SN74LS592	TI	100
8-Bit with Output Registers			
TTL-LS	**GD74LS590**	**Goldstar** (1066)	
	SN54LS590	† **TI** (716)	
	SN74LS590	TI	
	SN74LS591	TI	

Counters, Binary Count Up/Down

Function	Device	Source	Line
Counter/Register with Multiplexed Three-State Output			
TTL-LS	**SN54LS697**	† **TI** (716)	105
	SN54LS699	† **TI** (716)	
	SN74LS697	TI	
	SN74LS699	TI	
Synchronous			
TTL-ALS	**SN54AS867**	† **TI** (713)	
	SN54AS869	† **TI** (714)	110
	SN74AS867	TI	
	SN74AS869	TI	
TTL-F	**54F569**	† **Fairchild** (1023)	
	54F579	† **Fairchild** (1023)	
	54F779	† **Fairchild** (1023)	115
	74F569	**Fairchild** (1023,5310)	
	74F579	**Fairchild** (1023)	
	74F779	**Fairchild** (1023)	
	74F779	**Signetics** (1160)	
Synchronous, Parallel load			
	SN54LS469	† **MMI** (1100)	120
	SN74LS469	**MMI** (1100)	
Synchronous, Preset Input, Mode Control, Look-Ahead Carry			
TTL-ALS	DM54ALS169	† National	
	DM74ALS169	National	
	SN54ALS169B	**TI** (713)	
	SN74ALS169B	TI	125
TTL-AS	DM54AS169	† National	
	DM74AS169	National	
	SN54AS169	† **TI** (713)	
	SN74AS169	TI	
TTL-F	**54F169**	† **Fairchild** (1023)	130
	54F269	† **Fairchild** (1023)	
	74F169	**Fairchild** (1023,5310)	
	74F269	**Fairchild** (1023)	
	MC54F169	† **Motorola** (1127)	
	MC74F169	**Motorola** (1127)	135
	54F269	† Signetics	
	74F169	**Signetics** (1157)	
	74F269	**Signetics** (1158,1183)	
TTL-LS	**54LS169**	† **Fairchild** (613)	
	74LS169	**Fairchild** (5311)	140
	SN54LS169	† **Motorola** (1127)	
	SN74LS169	**Motorola** (1127)	
	DM54LS169A	† National	
	DM74LS169A	National	
	T54LS169	† SGS	145
	T74LS169	SGS	
	54LS169A	† Signetics	
	74LS169A	**Signetics** (1157)	
	SN54LS169B	† TI	
	SN54LS669	† **TI** (716)	150
	SN74LS169B	TI	
	SN74LS669	TI	
TTL-S	54S169A	Signetics	
	74S169A	**Signetics** (1157)	
	SN54S169	† **TI** (716)	155
	SN74S169	TI	
Synchronous, Preset Input with Mode Control			
TTL	**54191**	† **Fairchild** (617)	
	74191	Fairchild	
	MC74191	Motorola	
	DM54191	† National	160
	DM74191	National	
	54191	† Signetics	
	74191	**Signetics** (1157)	
	SN54191	† **TI** (712)	
	SN74191	TI	165
TTL-ALS	DM54ALS191	† National	
	DM74ALS191	National	
	SN54ALS191	† **TI** (713)	
	SN74ALS191	TI	
TTL-F	**54F191**	† **Fairchild** (610,1023)	170
	74F191	**Fairchild** (1023,5310)	
	MC54F191	† **Motorola** (1127)	
	MC74F191	**Motorola** (1127)	
	74F191	**Signetics** (1157)	
TTL-LS	54LS191	† Fairchild	175
	74LS191	Fairchild	
	GD74LS191	**Goldstar** (1066)	
	HD74LS191	Hitachi	
	SN54LS191	† **Motorola** (1127)	
	SN74LS191	**Motorola** (1127)	180
	DM54LS191	† National	
	DM74LS191	National	
	DN74LS191	Panasonic	
(Continued)			

† Military Temperature Range (−55° to 125°C)

* Typical Value

Bold face indicates additional data is provided on the page noted.

DIGITAL–TTL (Cont'd)

Counters, Binary Count Up/Down (Cont'd)

Function	Device	Source	Line
Synchronous, Preset Input with Mode Control			
TTL-LS		(Cont'd)	
	54LS191	† SGS	
	74LS191	SGS	
	54LS191	† Signetics	
	74LS191	**Signetics (1157)**	
	SN54LS191	† TI	5
	SN74LS191	TI	
Synchronous, Preset Input, Three-State			
TTL-ALS	M74ALS569A	Mitsubishi	
	SN54ALS569A	† **TI (713)**	
	SN74ALS569A	TI	
TTL-LS	AM25LS2569C	AMD	10
	AM25LS2569M	† AMD	
	SN54LS569	† **Motorola (1127)**	
	SN74LS569	**Motorola (1127)**	
	74LS569A	**Signetics (1159)**	
Synchronous, Preset Input (2 clocks)			
TTL	54193	† Fairchild	15
	74193	Fairchild	
	MC74193	Motorola	
	DM54193	† National	
	DM74193	National	
	DM7563	† National	20
	DM8563	National	
	54193	† Signetics	
	74193	**Signetics (1157)**	
	SN54193	† **TI (712)**	
	SN74193	TI	25
TTL-ALS	DM54ALS193	† National	
	DM74ALS193	National	
	SN54ALS193	† **TI (713)**	
	SN74ALS193	TI	
TTL-F	**54F193**	† **Fairchild** **(610,1023)**	30
	74F193	**Fairchild** **(1023,5310)**	
	MC54F193	† **Motorola (1127)**	
	MC74F193	**Motorola (1127)**	
	74F193	**Signetics (1157)**	
TTL-LS	**54LS193**	† **Fairchild** **(608,613,621,623)**	35
	74LS193	**Fairchild (5311)**	
	GD74LS193	**Goldstar (1066)**	
	HD74LS193	Hitachi	
	SN54LS193	† **Motorola (1127)**	
	SN74LS193	**Motorola (1127)**	40
	DM54LS193	† National	
	DM74LS193	National	
	DN74LS193	Panasonic	
	54LS193	† SGS	
	74LS193	SGS	45
	54LS193	Signetics	
	74LS193	**Signetics (1157)**	
	SN54LS193	† TI	
	SN74LS193	TI	
Synchronous with Mode Control			
TTL	RC8284	Raytheon	50
	RM8284	† Raytheon	
	S8284	† Signetics	
Synchronous 4-Bit, Look-Ahead Carry			
TTL-LS	HD74LS669	Hitachi	
	SN54LS669	† **Motorola (1127)**	
	SN74LS669	**Motorola (1127)**	55
Dual, Synchronous, Preset Input			
TTL	MC4355	† Motorola	
	MC74455	Motorola	

Counters, Decade Count Up

Function	Device	Source	Line
Divide-by-2 and by-5			
TTL	**5490**	† **Fairchild (616)**	
	74290	Fairchild	
	7490	Fairchild	60
	MC74290	Motorola	
	MC7490	Motorola	
	DM5490	† National	
	DM7490	National	
	5490	† Signetics	65
	7490	**Signetics (1156)**	
	SN54290	† **TI (712)**	
	SN5490A	† **TI (712)**	
	SN74290	TI	
	SN7490A	TI	70
	TD3501A	Toshiba	
TTL-LS	54LS290	† Fairchild	
	54LS90	† Fairchild	
	74LS290	**Fairchild (5311)**	
	GD74LS90	**Goldstar (1066)**	75
	HD74LS290	Hitachi	
	HD74LS90	Hitachi	
	SN54LS290	† **Motorola (1127)**	
	SN54LS90	† **Motorola (1127)**	
	SN74LS290	**Motorola (1127)**	80
	SN74LS90	**Motorola (1127)**	
	DM54LS290	† National	
	DM54LS90	† National	
	DM74LS290	National	
	DM74LS90	National	85
	DN74LS290	Panasonic	
	DN74LS90	Panasonic	
	54LS290	† SGS	
	54LS90	† SGS	
	74LS290	SGS	90
	74LS90	SGS	
	54LS290	† Signetics	
	54LS90	† Signetics	
	74LS290	**Signetics (1158)**	
	74LS90	**Signetics (1156)**	95
	SN54LS290	† **TI (715)**	
	SN54LS90	† **TI (715)**	
	SN74LS290	TI	
	SN74LS90	TI	
(Divide-by-2 and divide-by-5) Counter/Latch, Ripple, Preset Input			
TTL	54176	† Fairchild	100
	54196	† Fairchild	
	74176	Fairchild	
	74196	Fairchild	
	MC7280	† Motorola	
	MC74176	Motorola	105
	MC74196	Motorola	
	DM54176	† National	
	DM7280	† National	
	DM74176	National	
	DM8280	National	110
	RC8280	Raytheon	
	RC8290	Raytheon	
	RM8280	† Raytheon	
	RM8290	† Raytheon	
	S8280	† Signetics	115
	SN54176	† **TI (712)**	
	SN54196	† **TI (712)**	
	SN74176	TI	
	SN74196	TI	
TTL-LS	54LS196	† Fairchild	120
	74LS196	**Fairchild (5311)**	
	SN54LS196	† **Motorola (1127)**	
	SN74LS196	**Motorola (1127)**	
	DM54LS196	† National	
	DM74LS196	National	125
		(Continued)	
(Divide-by-2 and divide-by-5) Counter/Latch, Ripple, Preset Input			
TTL-LS		(Cont'd)	
	DN74LS196	Panasonic	
	54LS196	† SGS	
	74LS196	SGS	
	SN54LS196	† TI	
	SN74LS196	TI	130
TTL-S	**SN54S196**	† **TI (716)**	
	SN74S196	TI	
Synchronous, Preset Input (asynchronous clear)			
TTL	54160	† Fairchild	
	74160	Fairchild	
	9310C	Fairchild	135
	9310M	† Fairchild	
	MC74160	Motorola	
	MC8310	Motorola	
	MC9310	Motorola	
	DM54160A	† National	140
	DM74160A	National	
	DM8310	National	
	DM9310	† National	
	54160	† Signetics	
	74160	**Signetics (1157)**	145
	N9310	**Signetics (1175)**	
	SN54160	† **TI (712)**	
	SN74160	TI	
TTL-ALS	M74ALS160A	Mitsubishi	
	DM54ALS160	† National	150
	DM74ALS160	National	
	SN74ALS160B	TI	
TTL-AS	DM54AS160	† National	
	DM74AS160	National	
	SN74AS160	TI	155
TTL-F	**54F160A**	† **Fairchild** **(610,1023)**	
	74F160A	**Fairchild** **(1023,5310)**	
	MC54F160A	† **Motorola (1127)**	
	MC74F160A	**Motorola (1127)**	
	74F160A	**Signetics (1157)**	160
TTL-LS	**54LS160A**	† **Fairchild (613)**	
	74LS160	**Fairchild (5311)**	
	HD74LS160A	Hitachi	
	SN54LS160A	† **Motorola (1127)**	
	SN74LS160A	**Motorola (1127)**	165
	DM54LS160A	† National	
	DM74LS160A	National	
	DN74LS160A	Panasonic	
	54LS160	† SGS	
	74LS160	SGS	170
	54LS160A	† Signetics	
	74LS160A	**Signetics (1157)**	
	SN54LS160A	† **TI (715)**	
	SN74LS160A	TI	
TTL-S	SN54S160	† AMD	175
	SN74S160	AMD	
	93S10C	Fairchild	
	93S10M	† Fairchild	
Synchronous, Preset Input (synchronous clear)			
TTL	54162	† Fairchild	
	74162	Fairchild	180
	MC74162	Motorola	
	DM54162A	† National	
	DM74162A	National	
	SN54162	† **TI (712)**	
	SN74162	TI	185
Synchronous, Preset input (synchronous clear)			
TTL-ALS	M74ALS162A	Mitsubishi	

† Military Temperature Range (−55° to 125°C)

* Typical Value

Bold face indicates additional data is provided on the page noted.

DIGITAL–TTL (Cont'd)

Counters, Decade Count Up (Cont'd)

Function	Device	Source	Line
Synchronous, Preset Input (synchronous clear)			
TTL-ALS	DM54ALS162	† National	
	DM74ALS162	National	
	SN54ALS162A	**† TI (713)**	
	SN74ALS162B	TI	
TTL-AS	SN74AS162	TI	5
TTL-F	**54F162A**	**† Fairchild (610,1023)**	
	74F162A	**Fairchild (1023,5310)**	
	MC54F162A	**† Motorola (1127)**	
	MC74F162A	**Motorola (1127)**	
	74F162A	**Signetics (1157,1181)**	10
TTL-LS	**54LS162A**	**† Fairchild (613)**	
	74LS162	**Fairchild (5311)**	
	HD74LS162A	Hitachi	
	SN54LS162A	**† Motorola (1127)**	
	SN74LS162A	**Motorola (1127)**	15
	DM54LS162	† National	
	DM74LS162	National	
	DN74LS162	Panasonic	
	54LS162	† SGS	
	74LS162	SGS	20
	54LS162A	† Signetics	
	74LS162A	**Signetics (1157)**	
	SN54LS162A	**† TI (715)**	
	SN74LS162A	TI	
	SN74LS690	TI	25
	SN74LS692	TI	
TTL-S	**SN54S162**	**† TI (716)**	
	SN74S162	TI	
Dual, Ripple (dual 54/7490A)			
TTL	**SN54390**	**† TI (712)**	
	SN74390	TI	30
	SN74490	TI	
TTL-LS	54LS390	† Fairchild	
	54LS490	**† Fairchild (614)**	
	74LS390	**Fairchild (5311)**	
	74LS490	**Fairchild (5311)**	35
	GD74LS390	**Goldstar (1066)**	
	HD74LS390	Hitachi	
	HD74LS490	Hitachi	
	SN54LS390	**† Motorola (1127)**	
	SN54LS490	**† Motorola (1127)**	40
	SN74LS390	**Motorola (1127)**	
	SN74LS490	**Motorola (1127)**	
	DM54LS390	† National	
	DM74LS390	National	
	DN74LS390	Panasonic	45
	DN74LS490	Panasonic	
	T54LS390	† SGS	
	T54LS490	† SGS	
	T74LS390	SGS	
	T74LS490	SGS	50
	54LS390	† Signetics	
	54LS490	† Signetics	
	74LS390	**Signetics (1158)**	
	74LS490	**Signetics (1159)**	
	SN54LS390	**† TI (716)**	55
	SN54LS490	**† TI (716)**	
	SN74LS390	TI	
	SN74LS490	TI	
Dual, Synchronous			
TTL	MC74452	Motorola	
Dual 4-Bit Decade Counter			
TTL-LS	SN74LS68	TI	60
4-Bit, Three-State			
TTL-ALS	M74ALS560A	Mitsubishi	
	SN74ALS560A	TI	
10-Line Output (resettable 2-10)			
TTL	9319C	Fairchild	
	9319M	† Fairchild	
	9320M	† Fairchild	65

Counters, Decade Count Up/Down

Function	Device	Source	Line
Counter/Register with Multiplexed Three-State Output			
TTL-LS	**SN54LS696**	**† TI (716)**	
	SN74LS696	TI	
	SN74LS698	TI	
Synchronous			
TTL	RC8285	Raytheon	
	RM8285	† Raytheon	70
TTL-ALS	M74ALS568A	Mitsubishi	
	SN74ALS568A	TI	
TTL-F	**54F568**	**† Fairchild (1023)**	
	74F568	**Fairchild (1023,5310)**	
	54F579	† Signetics	75
	74F568	**Signetics (1159)**	
	74F569	**Signetics (1159)**	
	74F579	**Signetics (1159,1186)**	
TTL-LS	**74LS568A**	**Signetics (1159)**	
Synchronous, Preset Input, Mode Control, Look-Ahead Carry			
TTL-ALS	DM54ALS168	† National	80
	DM74ALS168	National	
	SN74ALS168B	TI	
TTL-AS	DM54AS168	† National	
	DM74AS168	National	
	SN74AS168	TI	85
TTL-F	**54F168**	**Fairchild (1023)**	
	74F168	**Fairchild (1023,5310)**	
	MC54F168	**† Motorola (1127)**	
	MC74F168	**Motorola (1127)**	
	74F168	**Signetics (1157)**	90
TTL-LS	AM25LS168AC	AMD	
	AM25LS168AM	† AMD	
	54LS168	**† Fairchild (613)**	
	74LS168	**Fairchild (5311)**	
	SN54LS168	**† Motorola (1127)**	95
	SN54LS668	**† Motorola (1127)**	
	SN74LS168	**Motorola (1127)**	
	SN74LS668	**Motorola (1127)**	
	DM54LS168A	National	
	DM74LS168A	National	100
	T54LS168	† SGS	
	T74LS168	SGS	
	54LS168A	† Signetics	
	54S168A	Signetics	
	74LS168A	**Signetics (1157)**	105
	74S168A	**Signetics (1157)**	
	SN54LS668	**† TI (716)**	
	SN74LS668	TI	
TTL-S	**SN54S168**	**† TI (716)**	
	SN74S168	TI	110
Synchronous, Preset Input, Three-State			
TTL-LS	AM25LS2568C	AMD	
	AM25LS2568M	† AMD	
	SN54LS568	**† Motorola (1127)**	
	SN74LS568	**Motorola (1127)**	
Synchronous, Preset Input (2 clocks)			
TTL	54192	† Fairchild	115
	74192	Fairchild	
	MC74192	Motorola	
	DM54192	† National	
	DM74192	National	
	DM7560	† National	120
	DM8560	National	
	54192	† Signetics	
	74192	**Signetics (1157)**	
	SN54192	**† TI (712)**	
	SN74192	TI	125
TTL-ALS	DM54ALS192	† National	
	DM74ALS192	National	
	SN74ALS192	TI	
TTL-F	**54F192**	**† Fairchild (610,1023)**	
	74F192	**Fairchild (1023,5310)**	130
	MC54F192	**† Motorola (1127)**	
	MC74F192	**Motorola (1127)**	
	74F192	**Signetics (1157)**	
TTL-LS	AM25LS192C	AMD	
	AM25LS192M	† AMD	135
	54LS192	**† Fairchild (613)**	
	74LS192	**Fairchild (5311)**	
	HD74LS192	Hitachi	
	SN54LS192	**† Motorola (1127)**	
	SN74LS192	**Motorola (1127)**	140
	DM54LS192	† National	
	DM74LS192	National	
	DN74LS192	Panasonic	
	54LS192	† SGS	
	74LS192	SGS	145
	54LS192	† Signetics	
	74LS192	**Signetics (1157)**	
	SN54LS192	† TI	
	SN74LS192	TI	
Synchronous, Preset, with Mode Control			
TTL	54190	† Fairchild	150
	74190	Fairchild	
	MC74190	Motorola	
	DM54190	† National	
	54190	† Signetics	
	74190	**Signetics (1157)**	155
	SN54190	**† TI (712)**	
	SN74190	TI	
TTL-ALS	DM54ALS190	† National	
	DM74ALS190	National	
	SN74ALS190	TI	160
TTL-F	**54F190**	**† Fairchild (610,1023)**	
	74F190	**Fairchild (1023,5310)**	
	MC54F190	**† Motorola (1127)**	
	MC74F190	**Motorola (1127)**	
	74F190	**Signetics (1157)**	165
TTL-LS	AM25LS190C	AMD	
	AM35LS190M	† AMD	
	54LS190	† Fairchild	
	74LS190	Fairchild	
	HD74LS190	Hitachi	170
	SN54LS190	**† Motorola (1127)**	
	SN74LS190	**Motorola (1127)**	
	DM54LS190	† National	
	DM74LS190	National	
	DN74LS190	Panasonic	175
	54LS190	† SGS	
	74LS190	SGS	
	54LS190	† Signetics	
	SN54LS190	† TI	
	SN74LS190	TI	180

† Military Temperature Range (−55° to 125°C)

* Typical Value

Bold face indicates additional data is provided on the page noted.

DIGITAL–TTL (Cont'd)

Counters, Decade Count Up/Down (Cont'd)

Function	Device	Source	Line
Dual, Synchronous, Preset Input			
TTL	MC74454	Motorola	
Four Counter/Latch/Display Driver (synchronous, BCD and segment drives)			
TTL	ZN1040E-RED	Ferranti	

Counters, Miscellaneous

Function	Device	Source	Line
Counter, 50 MHz			
TTL	SN74104	TI	
	SN74105	TI	
Divide-by-4			
TTL	TD6100	Toshiba	5
Divide-by-12 (divide by 2 and 6), Ripple			
TTL	5492	† Fairchild	
	7492	Fairchild	
	MC7492	Motorola	
	DM5492A	† National	
	DM7492A	National	10
	5492	† Signetics	
	7492	**Signetics (1156)**	
	SN5492A	† **TI (712)**	
	SN7492A	TI	
TTL-LS	54LS92	† Fairchild	15
	74LS92	**Fairchild (5311)**	
	GD74LS92	**Goldstar (1066)**	
	HD74LS92	Hitachi	
	SN54LS92	† **Motorola (1127)**	
	SN74LS92	**Motorola (1127)**	20
	DM54LS92	† National	
	DM74LS92	National	
	DN74LS92	Panasonic	
	54LS92	† SGS	
	74LS92	SGS	25
	54LS92	† Signetics	
	74LS92	**Signetics (1156)**	
	SN54LS92	† **TI (715)**	
	SN74LS92	TI	
Programmable Counter (16-Bit Countdown)			
	74F525	**Fairchild (1023,1026,5310)**	30
TTL-F	**54F525**	† **Fairchild (1023,1026)**	
Programmable Modulo-N Binary			
TTL	MC4018	Motorola	
	MC4019	Motorola	
	MC4318	† Motorola	
	MC4319	† Motorola	35
TTL-LS	**SN54LS718**	† **Motorola (1128)**	
	SN74LS718	**Motorola (1128)**	
Programmable Modulo-N Decade			
TTL	MC4016	Motorola	
	MC4017	Motorola	
	MC4316	† Motorola	40
	MC4317	† Motorola	
TTL-LS	**SN54LS716**	† **Motorola (1128)**	
	SN74LS716	**Motorola (1128)**	
Decade Counter/Latch/Decoder (nixie driver)			
TTL	SN74142	TI	
Decade Counter/Latch, LED/Lamp Driver (constant current output)			
TTL	SN74143	TI	45
Decade Counter/Latch LED/Lamp Driver (high current output)			
TTL	**SN54144**	† **TI (712)**	
	SN74144	TI	
Decade Counter/Latch/7 Segment Decoder			
TTL	MC4050	Motorola	
	MC4350	† Motorola	
TTL-LS	SN54LS294	† TI	50
4-Bit Universal			
TTL	MC4023	Motorola	
6-Bit Universal			
TTL	DM75S50	National	
8-Bit Binary Counter/Latch			
TTL-LS	SN74LS593	TI	
10-Bit Up/Down (provides CRT vertical and horizontal timing generation)			
TTL-LS	**SN54LS491**	† **MMI (1100)**	
	SN74LS491	**MMI (1100)**	55
	DM54LS491	† National	
	DM74LS4891	National	
16-Bit Programmable Modulo			
TTL-LS	SN74LS294	TI	
32-Bit Programmable Modulo			
TTL-LS	**SN54LS292**	† **TI (715)**	
	SN74LS292	TI	60
50-1 Frequency Divider			
TTL-LS	SN74LS56	TI	
60-1 Frequency Divider			
TTL-LS	SN74LS57	TI	

Decoders

Function	Device	Source	Line
Excess 3 Gray-to-Decimal (1 of 10)			
TTL	5444	† Fairchild	
	MC7444	Motorola	
	SN7444A	TI	65
Excess 3-to-Decimal (1 of 10)			
TTL	5443	† Fairchild	
	7443	Fairchild	
	MC7443	Motorola	
	SN7443A	TI	
Binary to Octal, Inverting/Non-Inverting, Open Collector			
TTL	MC4038	Motorola	70
Binary to Octal, Non-Inverting			
TTL	MC4048	Motorola	
Binary to Octal (1 of 8)			
TTL	MC4006	Motorola	
	MC4306	† Motorola	
	MC7250	Motorola	
	MC8250	† Motorola	75
	RC8250	Raytheon	
	RM8250	† Raytheon	
	S8250	† Signetics	
TTL-S	**N82S50**	**Signetics (1175)**	
Binary to Octal (1 of 8), Polarity Control, Three-State			
TTL-LS	AM2921C	AMD	80
	AM2921M	† AMD	
Binary to 2-of-8, Open Collector			
TTL	MC4040	Motorola	
BCD-to-Binary and Binary-to-BCD Converter, Open Collector			
TTL	MC4001	Motorola	
BCD-to-Decimal Decoder/Driver, Open Collector			
TTL-F	74F445	Signetics	
TTL-LS	54LS445	† Signetics	85
	74LS445	**Signetics (1158)**	
	SN74LS445	TI	
BCD-to-Decimal Decoder/Driver, Open Collector to 30 V Output			
TTL	5445	† Fairchild	
	7445	Fairchild	
	MC7445	Motorola	90
	DM5445	† National	
	DM7445	National	
		(Continued)	
BCD-to-Decimal Decoder/Driver, Open Collector to 30 V Output			
TTL		(Cont'd)	
	5445	† Signetics	
	7445	**Signetics (1156)**	
	SN5445	† **TI (712)**	95
	SN7445	TI	
BCD-to-Decimal Decoder/Driver, Open Collector, 15 V			
TTL	54145	† Fairchild	
	74145	Fairchild	
	MC74145	Motorola	
	DM54145	† National	100
	DM74145	National	
	54145	† Signetics	
	74145	**Signetics (1157)**	
	SN74145	TI	
TTL-LS	74LS145	Fairchild	105
	GD74LS145	**Goldstar (1066)**	
	HD74LS145	Hitachi	
	SN54LS145	† **Motorola (1130)**	
	SN74LS145	**Motorola (1130)**	
	DN74LS145	Panasonic	110
	SN54LS145	† **TI (715)**	
	SN74LS145	TI	
BCD-to-Decimal (1 of 10)			
TTL	**5442**	† **Fairchild (609,616,622,623)**	
	7442	Fairchild	
	9301C	**Fairchild (617)**	115
	9301M	† **Fairchild (617)**	
	9302C	Fairchild	
	9302M	† Fairchild	
	MC7442	Motorola	
	MC8301	Motorola	120
	MC9301	† Motorola	
	DM5442	† National	
	DM7442	National	
	DM8301	National	
	DM9301	† National	125
	RC8251	Raytheon	
	RC8252	Raytheon	
	5442	† Signetics	
	7442	**Signetics (1156)**	
	SN5442A	† **TI (712)**	130
	SN7442A	TI	
TTL-LS	**54LS42**	† **Fairchild (608,612,621,623)**	
	74LS42	**Fairchild (5311)**	
	GD74LS42	**Goldstar (1066)**	
	HD74LS42	Hitachi	135
	SN54LS42	† **Motorola (1130)**	
	SN74LS42	**Motorola (1130)**	
	DM54LS42	† National	
	DM74LS42	National	
	DN74LS42	Panasonic	140
	54LS42	† SGS	
	74LS42	SGS	
	54LS42	† Signetics	
	74LS42	**Signetics (1156)**	
	SN54LS42	† **TI (715)**	145
	SN74LS42	TI	
TTL-S	**N82S52**	**Signetics (1175)**	
BCD-to-Decimal (1 of 10), Three-State			
TTL-F	**54F537**	† **Fairchild (1025)**	
	74F537	**Fairchild (1025,5310)**	
	MC54F537	† Motorola	150
	MC74F537	Motorola	
	74F537	**Signetics (1159)**	
TTL-LS	AM25LS2537C	AMD	
	AM25LS2537M	† AMD	

† Military Temperature Range (−55° to 125°C)

* Typical Value

Bold face indicates additional data is provided on the page noted.

DIGITAL-TTL (Cont'd)

Decoders (Cont'd)

Function	Device	Source	Line
Dual Binary to One-of-Four Line Gated			
TTL	MC4007	Motorola	
	MC4307	† Motorola	
Dual 1-of-4 Decoder/Demultiplexer (independent address)			
TTL	9321C	Fairchild	
	9321M	† Fairchild	
Dual 2-Line to 4-Line Decoder/Demultiplexer			
TTL-ALS	SN54ALS539	† Motorola	5
TTL-F	**54F139**	† **Fairchild (607,610,620,623,1025)**	
	74F139	**Fairchild (1025)**	
	MC54F139	† **Motorola (1130)**	
	MC74F139	**Motorola (1130)**	
	54F139	† Signetics	10
	74F139	**Signetics (1157)**	
TTL-LS	AM25LS139C	AMD	
	AM25LS139M	AMD	
	54LS139	† **Fairchild (608,613,621,623)**	
	74LS139	**Fairchild (5311)**	15
	GD74LS139	**Goldstar (1066)**	
	HD74LS139	Hitachi	
	SN54LS139	† **Motorola (1130)**	
	SN74LS139	**Motorola (1130)**	
	DM54LS139	† National	20
	DM74LS139	National	
	DN74LS139	Panasonic	
	54LS139	† SGS	
	74LS139	SGS	
	54LS139	† Signetics	25
	74LS139	**Signetics (1157)**	
	SN54LS139A	† **TI (715)**	
	SN74LS139A	TI	
TTL-S	54S139	† Fairchild	
	74S139	Fairchild	30
	GD74S139	**Goldstar (1066)**	
	DM54S139	† National	
	DM74S139	National	
	54S139	† Signetics	
	74S139	**Signetics (1157)**	35
	SN54S139	† **TI (716)**	
	SN74S139	TI	
Dual 2-Line to 4-Line Decoder/Demultiplexer, Open Collector (or 3-line to 8-line decoder/demultiplexer)			
TTL	54156	† Fairchild	
	74156	Fairchild	
	MC74156	Motorola	40
	DM54156	† National	
	DM74156	National	
	54156	† Signetics	
	74156	**Signetics (1157)**	
	SN54156	† **TI (712)**	45
	SN74156	TI	
TTL-LS	**54LS156**	† **Fairchild (613)**	
	74LS156	**Fairchild (5311)**	
	GD74LS156	**Goldstar (1066)**	
	HD74LS156	Hitachi	50
	SN54LS156	† **Motorola (1130)**	
	SN74LS156	**Motorola (1130)**	
	DM54LS156	† National	
	DM74LS156	National	
	DN74LS156	Panasonic	55
	54LS156	† SGS	
	74LS156	SGS	
	54LS156	† Signetics	
	74LS156	**Signetics (1157)**	
	SN54LS156	† **TI (715)**	60
	SN74LS156	TI	

Function	Device	Source	Line
Dual 2-Line to 4-Line Decoder/Demultiplexer, Three-State			
TTL-F	**54F539**	† **Fairchild (1025)**	
	74F539	**Fairchild (1025,5310)**	
	MC54F539	† Motorola	
	MC74F539	Motorola	65
	74F539	**Signetics (1159)**	
TTL-LS	AM25LS2539C	AMD	
	AM25LS2539M	† AMD	
Dual 2-Line to 4-Line Decoder/Demultiplexer, Totem Pole Output (or 3-line to 8-line decoder/demultiplexer)			
TTL	54155	† Fairchild	
	74155	Fairchild	70
	MC74155	Motorola	
	DM54155	† National	
	DM74155	National	
	54155	Signetics	
	74155	**Signetics (1157)**	75
	SN54155	† **TI (712)**	
	SN74155	TI	
TTL-LS	**54LS155**	† **Fairchild (613)**	
	74LS155	**Fairchild (5311)**	
	GD74LS155	**Goldstar (1066)**	80
	HD74LS155	Hitachi	
	SN54LS155	† **Motorola (1130)**	
	SN74LS155	**Motorola (1130)**	
	DM54LS155	† National	
	DM74LS155	National	85
	DN74LS155	Panasonic	
	54LS155	† SGS	
	74LS155	SGS	
	54LS155	† Signetics	
	74LS155	**Signetics (1157)**	90
	SN54LS155A	† **TI (715)**	
	SN74LS155A	TI	
1-Line to 8-Line Decoder/Demultiplexer			
	54F547	† **Fairchild (611,1025)**	
	54F548	† **Fairchild (611,1025)**	
	74F547	**Fairchild (1025,5310)**	95
	74F548	**Fairchild (1025,5310)**	
	74F547	**Signetics (1159)**	
	74F548	**Signetics (1159)**	
3-Line to 8-Line Decoder/Demultiplexer			
TTL-ALS	M74ALS138	Mitsubishi	
	DM54ALS138	† National	100
	DM74ALS138	National	
	SN54ALS138	† **TI (713)**	
	SN74ALS138	TI	
TTL-AS	AM2924C	AMD	
	AM2924M	† AMD	105
	SN54AS138	† **TI (713)**	
	SN74AS138	TI	
TTL-F	**54F138**	† **Fairchild (607,610,620,623,1025)**	
	74F138	**Fairchild (1025,5310)**	
	MC54F138	† **Motorola (1130)**	110
	MC74F138	**Motorola (1130)**	
	74F138	**Signetics (1157)**	
TTL-LS	AM25LS2548C	AMD	
	54LS138	† **Fairchild (608,612,621,623)**	
	74LS138	**Fairchild (5311)**	115
	GD74LS138	**Goldstar (1066)**	
	HD74LS138	Hitachi	
	SN54LS138	† **Motorola (1130)**	
	SN74LS138	**Motorola (1130)**	
	DM54LS138	† National	120

(Continued)

Function	Device	Source	Line
3-Line to 8-Line Decoder/Demultiplexer			
TTL-LS		(Cont'd)	
	DM74LS138	National	
	DN74LS138	Panasonic	
	54LS138	† SGS	
	74LS138	SGS	
	54LS138	† Signetics	125
	74LS138	**Signetics (1157)**	
	SN54LS138	† **TI (715)**	
	SN74LS138	TI	
TTL-S	SN74S138	AMD	
	54S138	† Fairchild	130
	74S138	Fairchild	
	GD74S138	**Goldstar (1066)**	
	DM54S138	† National	
	DM74S138	National	
	54S138	† Signetics	135
	74S138	† **Signetics (1157)**	
	SN54S138	† **TI (716)**	
	SN74S138	TI	
3-Line to 8-Line Decoder/Demultiplexer, Inverting/Non-Inverting, Input Latches			
TTL-LS	AM25LS2536C	AMD	
	AM25LS2536M	† AMD	140
3-Line to 8-Line Decoder/Demultiplexer, Inverting/Non-Inverting, Three-State			
TTL-F	**54F538**	† **Fairchild (1025)**	
	74F538	**Fairchild (1025)**	
	MC54F538	† Motorola	
	MC74F538	Motorola	
	74F538	**Signetics (1159)**	145
TTL-LS	AM25LS2538C	AMD	
	AM25LS2538M	† AMD	
3-Line to 8-Line Decoder/Demultiplexer with Input Latches			
TTL-ALS	M74ALS137	Mitsubishi	
	DM54ALS137	† National	
	DM74ALS137	National	150
	SN54ALS137	† **TI (713)**	
	SN74ALS137	TI	
TTL-AS	SN74AS137	TI	
TTL-LS	**SN54LS137**	† **Motorola (1130)**	
	SN74LS137	**Motorola (1130)**	155
	SN54LS137	† **TI (715)**	
	SN74LS137	TI	
TTL-S	54S137	† Fairchild	
	93S137C	Fairchild	
	93S137M	† Fairchild	160
3-Line to 8-Line Decoders/Demultiplexer with Address Registers			
TTL-ALS	M74ALS131	Mitsubishi	
	DM54ALS131	† National	
	DM74ALS131	National	
	SN74ALS131	TI	
TTL-AS	SN74AS131	TI	165
4-Line to 16-Line Decoder/Demultiplexer			
TTL	**54154**	† **Fairchild (616)**	
	9311C	**Fairchild (617)**	
	9311M	† **Fairchild (617)**	
	MC74154	Motorola	
	MC8311	Motorola	170
	MC9311	† Motorola	
	DM54154	† National	
	DM74154	National	
	DM8311	National	
	DM9311	† National	175
	54154	† Signetics	
	74154	**Signetics (1157)**	
	SN74154	TI	
TTL-LS	**GD74LS154**	**Goldstar (1066)**	
	HD74LS154	Hitachi	180
	DM54LS154	† National	

(Continued)

† Military Temperature Range (−55° to 125°C)

* Typical Value

Bold face indicates additional data is provided on the page noted.

DIGITAL-TTL (Cont'd)

Decoders (Cont'd)

Function	Device	Source	Line
4-Line to 16-Line Decoder/Demultiplexer			
TTL-LS (Cont'd)			
	DM74LS154	National	
	54LS154	† Signetics	
	74LS154	**Signetics (1157)**	
4-Line to 16-Line Decoder/Demultiplexer, Open Collector Output			
TTL	SN74159	TI	
6-Bit Chip Select Decoder			
TTL-S	AM29806C	AMD	5
	AM29806M	† AMD	

Drivers

Function	Device	Source	Line
Hex, Three-State			
TTL-LS	HD74LS366A	Hitachi	
See Also Interface-Memory and Peripheral Drivers			
Dual 4-Input Positive NAND 50 Ohm Line Driver			
TTL-S	54S140	† Fairchild	
	74S140	† Fairchild	10
	DM54S140	† National	
	DM74S140	National	
	54S140	† Signetics	
	74S140	**Signetics (1157)**	
	SN74S140	TI	15
Quad Bus Driver, Three-State			
TTL	RC8T09	Raytheon	
	RM8T09	† Raytheon	
	N8T09	**Signetics (1175)**	
	S8T09	† Signetics	
Quad Predriver, Open Collector			
TTL	MC4042	Motorola	20
Quad 2-Input AND Buffer, Open Collector, to 15 V Output (high voltage 54/74109)			
TTL	DS7819	† National	
	DS8819	National	
Quad 2-Input AND Power Driver, Open Collector (to 100 V, sinks 500 mA)			
TTL	UHC/D-400	† Sprague	
	UHC/D-406	† Sprague	
	UHC/D-500	† Sprague	25
	UHC/D-506	† Sprague	
	UHP-400	**Sprague (3269)**	
	UHP-406	**Sprague (3269)**	
	UHP-500	**Sprague (3269)**	
	UHP-506	**Sprague (3269)**	30
Quad 2-Input AND Power Driver (to 80 V, sinks 600ma)			
TTL	**UDN-5706A**	**Sprague (3269)**	
	UDS-5706H	† Sprague	
Quad 2-Input NAND Buffer, Open Collector, to 15 V Output			
TTL	5426	† Fairchild	
	7426	Fairchild	
	MC7426	Motorola	35
	DM5426	† National	
	DM7426	National	
	DS7810	† National	
	DS7811	† National	
	DS8810	National	40
	DS8811	National	
	5426	† Signetics	
	7426	**Signetics (1156)**	
	SN5426	**† TI (712)**	
	SN7426	TI	45
Quad 2-Input NAND Buffer, Open Collector, to 30 V Output			
TTL	S8T80	† Signetics	
Quad 2-Input NAND Bus Driver, Open Collector, 80ma			
TTL	96101	Fairchild	

Function	Device	Source	Line
Quad 2-Input NAND Power Driver, Open Collector (to 100 V, sinks 500 mA)			
TTL	UHC/D-407	† Sprague	
	UHC/D-408	† Sprague	
	UHC/D-507	† Sprague	50
	UHC/D-508	† Sprague	
	UHP-407	**Sprague (3269)**	
	UHP-408	**Sprague (3269)**	
	UHP-507	**Sprague (3269)**	
	UHP-508	**Sprague (3269)**	55
Quad 2-Input NOR Driver			
TTL-AS	DM54AS1036	† National	
	DM74AS1036	National	
	SN74AS1036A	TI	
Quad 2-Input NOR Power Driver, Open Collector (to 100 V, sinks 500 mA)			
TTL	UHC/D-432	† Sprague	
	UHC/D-433	† Sprague	60
	UHC/D-532	† Sprague	
	UHC/D-533	† Sprague	
	UHP-432	**Sprague (3269)**	
	UHP-433	**Sprague (3269)**	
	UHP-532	**Sprague (3269)**	65
	UHP-533	**Sprague (3269)**	
Quad 2-Input NOR 74-Ohm/50-Ohm Line Driver			
TTL	**74128**	**Signetics (1157)**	
	SN74128	TI	
Quad 2-Input OR Power Driver, Open Collector (to 100 V, sinks 500 mA)			
TTL	UHC/D-402	† Sprague	
	UHC/D-403	† Sprague	70
	UHC/D-502	† Sprague	
	UHC/D-503	† Sprague	
	UHP-402	**Sprague (3269)**	
	UHP-403	**Sprague (3269)**	
	UHP-502	**Sprague (3269)**	75
	UHP-503	**Sprague (3269)**	
Hex Buffer/Driver, Open Collector High Voltage Output, to 15 V			
TTL	5417	† Fairchild	
	7417	Fairchild	
	MC7417	Motorola	
	DM5417	† National	80
	DM7417	National	
	5417	† Signetics	
	7417	**Signetics (1156)**	
	SN5417	**† TI (712)**	
	SN7417	TI	85
Hex Buffer/Driver, Open Collector High Voltage Output, to 30 V			
TTL	5407	† Fairchild	
	7407	Fairchild	
	MC7407	Motorola	
	DM5407	† National	
	DM7407	National	90
	5407	† Signetics	
	7407	**Signetics (1156)**	
	SN5407	**† TI (712)**	
	SN7407	TI	
Hex Inverter Buffer/Driver Open Collector High Voltage Output, to 15 V			
TTL	5416	† Fairchild	95
	7416	Fairchild	
	MC7416	Motorola	
	DM5416	† National	
	DM7416	National	
	DS7812	† National	100
	DS8812	National	
	5416	† Signetics	
	7416	**Signetics (1156)**	
	SN5416	**† TI (712)**	
	SN7416	TI	105

Function	Device	Source	Line
Hex Inverter Buffer/Driver Open Collector High Voltage Output, to 30 V			
TTL	5406	† Fairchild	
	7406	Fairchild	
	MC7406	Motorola	
	DM5406	† National	
	DM7406	National	110
	5406	† Signetics	
	7406	**Signetics (1156)**	
	SN5406	**† TI (712)**	
	SN7406	TI	
Hex Inverter/MOS Memory Driver			
TTL	DS16149	† National	115
	DS16179	† National	
	DS36149	National	
	DS36179	National	
	SN74S436	TI	
	SN74S437	TI	120
Hex, Three-State			
TTL	**74366**	**Signetics (1158)**	
	74367	**Signetics (1158)**	
TTL-F	**54F366**	**† Fairchild (1024)**	
	74F366	**Fairchild (1024)**	
	54F366	† Signetics	125
	74F366	**Signetics (1158)**	
TTL-LS	HD74LS367A	Hitachi	
Hex, Three-State Driver			
TTL	DM54366	† National	
	DM54367	† National	
	DM74366	National	130
	DM74367	National	
	54366A	† Signetics	
	54367A	† Signetics	
	SN54366A	**† TI (712)**	
	SN54367A	**† TI (712)**	135
	SN74367A	TI	
Hex 2-Input AND Driver			
TTL-ALS	DM54ALS808	† National	
	DM74ALS808	National	
	SN54ALS808	**† TI (713)**	
	SN74ALS1808	TI	140
	SN74ALS808	TI	
TTL-AS	DM74AS808A	National	
	SN54AS808B	**† TI (713)**	
	SN74AS1808	TI	
	SN74AS808B	TI	145
Hex 2-Input NAND Driver			
TTL-ALS	DM54ALS804	† National	
	DM74ALS804	National	
	SN54ALS804	**† TI (713)**	
	SN74ALS1804	TI	
	SN74ALS804	TI	150
TTL-AS	DM74AS804A	National	
	SN54AS804B	**† TI (713)**	
	SN74AS1804	TI	
	SN74AS804B	TI	
Hex 2-Input NOR Driver			
TTL-ALS	DM54ALS805	† National	155
	DM74ALS805	National	
	SN54ALS1805	† TI	
	SN54ALS805	**† TI (713)**	
	SN74ALS1805	TI	
	SN74ALS805	TI	160
TTL-AS	DM74AS805A	National	
	SN54AS805B	**† TI (713)**	
	SN74AS1805	TI	
	SN74AS805B	TI	
Hex 2-Input OR Driver			
TTL-ALS	DM54ALS832	† National	165
	DM74ALS832	National	
	SN54ALS832	**† TI (713)**	

(Continued)

† Military Temperature Range (−55° to 125°C)

* Typical Value

Bold face indicates additional data is provided on the page noted.

DIGITAL–TTL (Cont'd)

Drivers (Cont'd)

Function	Device	Source	Line
Hex 2-Input OR Driver			
TTL-ALS		(Cont'd)	
	SN74ALS1832	TI	
	SN74ALS832	TI	
TTL-AS	DM74AS832A	National	
	SN54AS832B	**† TI (713)**	
	SN74AS1832	TI	5
	SN74AS832B	TI	

Flip-Flops, D-Type

Function	Device	Source	Line
Octal Register, Inverting, Three-State			
TTL-S	AM2955C	AMD	
	AM2955M	† AMD	
Octal Register, Non-Inverting, Three-State			
TTL-S	AM2954C	AMD	
	AM2954M	† AMD	10
Quad Register with Dual Three-Stete Outputs			
TTL	AM2919C	AMD	
	AM2919M	† AMD	
Dual Edge-Triggered			
TTL-ALS	DM54ALS876	† National	
	DM74ALS874	National	
	DM74ALS876	National	15
	SN54ALS874	**† TI (713)**	
	SN54ALS876	**† TI (713)**	
	SN54ALS878	**† TI (713)**	
	SN54ALS879	**† TI (713)**	
	SN74ALS874A	TI	20
	SN74ALS876A	TI	
	SN74ALS878A	TI	
	SN74ALS879A	TI	
TTL-AS	DM54AS874	† National	
	DM54AS876	† National	25
	DM54AS878	† National	
	DM54AS879	† National	
	DM74AS874	National	
	DM74AS876	National	
	DM74AS878	National	30
	DM74AS879	National	
	SN54AS874	**† TI (714)**	
	SN54AS876	**† TI (714)**	
	SN74AS874	TI	
	SN74AS876	TI	35
	SN74AS878	TI	
	SN74AS879	TI	
Dual Gated			
TTL	DM7613	† National	
	DM8613	National	
Dual Positive Edge-Triggered with Preset and Clear			
TTL	**5474**	**† Fairchild** **(609,616,622,623)**	40
	7474	Fairchild	
	MC7474	Motorola	
	DM5474	† National	
	DM7474	National	
	5474	† Signetics	45
	7474	**Signetics (1156)**	
	SN5474	**† TI (712)**	
	SN7474	TI	
TTL-ALS	M74ALS74	Mitsubishi	
	DM54ALS74	† National	50
	DM74ALS74	National	
	SN54ALS74A	**† TI (713)**	
	SN74ALS74A	TI	
TTL-AS	DM54AS74	† National	
	DM74AS74	National	55
	SN54AS74	**† TI (713)**	
	SN74AS74	TI	
		(Continued)	
Dual Positive Edge-Triggered with Preset and Clear		(Cont'd)	
TTL-F	**54F74**	**† Fairchild** **(607,610,620,623,1021)**	
	74F74	**Fairchild** **(1021,5310)**	
	MC54F74	**† Motorola (1126)**	60
	MC74F74	**Motorola (1126)**	
	74F74	**Signetics (1156)**	
TTL-H	54H74	† Fairchild	
	74H74	Fairchild	
	MC3060	Motorola	65
	MC3160	† Motorola	
	DM74H74	National	
	SN74H74	TI	
TTL-LS	**54LS74**	**† Fairchild** **(608,612,621,623)**	
	74LS74	**Fairchild (5311)**	70
	GD74LS74A	**Goldstar (1066)**	
	HD74LS74A	Hitachi	
	SN54LS74A	**† Motorola (1126)**	
	SN74LS74A	**Motorola (1126)**	
	DM54LS74	† National	75
	DM74LS74	National	
	DN74LS74A	Panasonic	
	54LS74	† SGS	
	74LS74	SGS	
	54LS74A	† Signetics	80
	74LS74A	**Signetics (1156)**	
	SN54LS74A	**† TI (715)**	
	SN74LS74A	TI	
TTL-S	54S74	† Fairchild	
	74S74	Fairchild	85
	GD74S74	**Goldstar (1066)**	
	DM74S74	National	
	54S74	† Signetics	
	74S74	**Signetics (1156)**	
	SN54S74	**† TI (716)**	90
	SN74S74	TI	
Quad, Common Clock			
TTL	MC4015	Motorola	
Quad Edge-Triggered with Clear, Complementary Output			
TTL	**54175**	**† Fairchild** **(609,617,622,623)**	
	74175	Fairchild	
	MC74175	Motorola	95
	DM54175	† National	
	DM74175	National	
	54175	† Signetics	
	74175	**Signetics (1157)**	
	SN54175	**† TI (712)**	100
	SN74175	TI	
TTL-ALS	DM54ALS175	† National	
	DM74ALS175	National	
	SN54ALS175	**† TI (713)**	
	SN74ALS175	TI	105
TTL-AS	DM54AS175	† National	
	DM74AS175	National	
	SN74AS175	TI	
TTL-F	**54F175**	**† Fairchild** **(607,610,620,623,1022)**	
	74F175	**Fairchild** **(1022,5310)**	110
	MC54F175	**† Motorola (1126)**	
	MC74F175	**Motorola (1126)**	
	74F175	**Signetics (1157)**	
TTL-LS	**54LS175**	**† Fairchild** **(608,613,621,623)**	
	74LS175	**Fairchild (5311)**	115
	GD74LS175	**Goldstar (1066)**	
	HD74LS175	Hitachi	
	SN54LS175	**† Motorola (1126)**	
		(Continued)	
Quad Edge-Triggered with Clear, Complementary Output			
TTL-LS		(Cont'd)	
	SN74LS175	**Motorola (1126)**	
	DM54LS175	† National	120
	DM74LS175	National	
	DN74LS175	Panasonic	
	54LS175	† SGS	
	74LS175	SGS	
	54LS175	† Signetics	125
	74LS175	Signetics	
	SN54LS175	† TI	
	SN74LS175	TI	
TTL-S	SN74S175	AMD	
	54S175	† Fairchild	130
	74S175	Fairchild	
	DM54S175	† National	
	DM74S175	National	
	54S175	† Signetics	
	74S175	Signetics	135
	SN54S175	**† TI (716)**	
	SN74S175	TI	
Quad I/O Register, Three-State (two terminals per flip-flop can be used as input or output)			
TTL	DM7542	† National	
	DM8542	National	
Quad, Standard TTL and Three-State Outputs			
TTL	AM2918C	AMD	140
	AM2918M	† AMD	
	SFC-2918	ThomsonCSF	
TTL-LS	AM25LS2518C	AMD	
	AM25LS2518M	† AMD	
	AM29LS18	AMD	145
	SN54LS388	† AMD	
	SN74LS388	AMD	
TTL-S	AM25S18C	AMD	
	AM25S18M	† AMD	
	SN54S388	† AMD	150
	SN74S388	AMD	
Quad with clear			
TTL-LS	SN74LS171	TI	
Quad with Common Clock Enable			
TTL-F	**54F379**	**† Fairchild (1022)**	
	74F379	**Fairchild** **(1022,5310)**	
	MC54F379	**† Motorola (1126)**	155
	MC74F379	**Motorola (1126)**	
	74F379	**Signetics (1158)**	
TTL-LS	AM25LS08C	AMD	
	AM25LS08M	† AMD	
	AM25LS379C	AMD	160
	AM25LS379M	† AMD	
	SN54LS379	† AMD	
	SN74LS379	AMD	
	54LS379	**† Fairchild (614)**	
	74LS379	**Fairchild (5311)**	165
	SN54LS379	**† Motorola (1126)**	
	SN74LS379	**Motorola (1126)**	
	T54LS379	† SGS	
	T74LS379	SGS	
	SN54LS379	**† TI (715)**	170
	SN74LS379	TI	
TTL-S	AM25S08C	AMD	
	AM25S08M	† AMD	
	SN54S379	† AMD	
	SN74S379	AMD	175
Quad, Dual Three-State Outputs			
TTL-LS	AM25LS2519C	AMD	
	AM25LS2519M	† AMD	

† Military Temperature Range (–55° to 125°C)

* Typical Value

Bold face indicates additional data is provided on the page noted.

DIGITAL-TTL (Cont'd)

Flip-Flops, D-Type (Cont'd)

Function	Device	Source	Line
Quad Three-State			
TTL	**54173**	† **Fairchild (617)**	
	74173	Fairchild	
	DM54173	† National	
	DM74173	National	
	DM7551	† National	5
	DM8551	National	
	54173	† Signetics	
	74173	**Signetics (1157)**	
	N8T10	**Signetics (1175)**	
	S8T10	† Signetics	10
	SN54173	† **TI (712)**	
	SN74173	TI	
TTL-LS	**54LS173A**	† **Fairchild (613)**	
	74LS173A	**Fairchild (5311)**	
	SN54LS173A	† **Motorola (1126)**	15
	SN74LS173A	**Motorola (1126)**	
	DM54LS173	† National	
	DM74LS173	National	
	DN74LS173	Panasonic	
	54LS173	† Signetics	20
	74LS173	**Signetics (1157,1158)**	
	SN54LS173A	† TI	
	SN74LS173A	TI	
Hex Edge-Triggered with Clear			
TTL	**54174**	† **Fairchild (609,617,622,623)**	
	74174	Fairchild	25
	93174C	Fairchild	
	MC74174	Motorola	
	DM54174	† National	
	DM74174	National	
	54174	† Signetics	30
	74174	**Signetics (1157)**	
	SN54174	† **TI (712)**	
	SN74174	TI	
TTL-ALS	DM54ALS174	† National	
	DM74ALS174	National	35
	SN54ALS174	† **TI (713)**	
	SN74ALS174	TI	
TTL-AS	DM54AS174	† National	
	DM74AS174	National	
	SN54AS174	† **TI (713)**	40
	SN74AS174	TI	
TTL-F	**54F174**	† **Fairchild (610,1022)**	
	74F174	**Fairchild (1022,5310)**	
	MC54F174	† **Motorola (1126)**	
	MC74F174	**Motorola (1126)**	45
	74F174	**Signetics (1157)**	
TTL-LS	AM25LS174C	AMD	
	AM25LS174M	† AMD	
	54LS174	† **Fairchild (608,613,621,623)**	
	74LS174	**Fairchild (5311)**	50
	GD74LS174	**Goldstar (1066)**	
	HD74LS174	Hitachi	
	SN54LS174	† **Motorola (1126)**	
	SN74LS174	**Motorola (1126)**	
	DM54LS174	† National	55
	DM74LS174	National	
	DN74LS174	Panasonic	
	54LS174	† SGS	
	74LS174	SGS	
	54LS174	† Signetics	60
	74LS174	**Signetics (1157)**	
	SN54LS174	† TI	
	SN74LS174	TI	
		(Continued)	
Hex Edge-Triggered with Clear (Cont'd)			
TTL-S	SN74S174	AMD	
	54S174	† Fairchild	65
	74S174	Fairchild	
	DM54S174	† National	
	DM74S174	National	
	54S174	† Signetics	
	74S174	**Signetics (1157)**	70
	SN54S174	† **TI (716)**	
	SN74S174	TI	
Hex with Common Enable			
TTL-F	**54F378**	† **Fairchild (611,1022)**	
	74F378	**Fairchild (1022,5310)**	
	MC54F378	† **Motorola (1126)**	75
	MC74F378	**Motorola (1126)**	
	74F378	**Signetics (1158)**	
TTL-LS	AM25LS07C	AMD	
	AM25LS07M	† AMD	
	AM25LS378C	AMD	80
	AM25LS378M	† AMD	
	SN54LS378	† AMD	
	SN74LS378	AMD	
	54LS378	† **Fairchild (614)**	
	74LS378	**Fairchild (5311)**	85
	SN54LS378	† **Motorola (1126)**	
	SN74LS378	**Motorola (1126)**	
	T54LS378	† SGS	
	T74LS378	SGS	
	54LS378	† Signetics	90
	74LS378	**Signetics (1158)**	
	SN54LS378	† **TI (715)**	
	SN74LS378	TI	
TTL-S	AM25S07C	AMD	
	AM25S07M	† AMD	95
	SN54S378	† AMD	
	SN74S378	AMD	
Octal Common Clear and Enable, Three-State			
TTL-LS	AM25LS2520C	AMD	
	AM25LS2520M	† AMD	
	AM2920C	AMD	100
	AM2920M	† AMD	
	N8TS806	Signetics	
	N8TS808	Signetics	
Octal Edge-Triggered, Common Clock and Enable,			
Three-State	54LS364	† Signetics	
	74LS364	**Signetics (1158)**	105
Octal Edge-Triggered, Inverting, Three-State			
TTL-ALS	DM54ALS534	† National	
	DM54ALS564	† National	
	DM54AS534	† National	
	DM74ALS534	National	
	DM74ALS564	National	110
	DM74AS534	National	
	SN54ALS534	† **TI (713)**	
	SN54ALS564	† **TI (713)**	
	SN54ALS576	† **TI (713)**	
	SN74ALS534	TI	115
	SN74ALS564A	TI	
	SN74ALS576A	TI	
	SN74AS534	TI	
TTL-AS	DM54AS576	† National	
	DM74AS576	National	120
	SN54AS576	† **TI (713)**	
	SN74AS576	TI	
TTL-F	**54F534**	† **Fairchild (611,1022)**	
	74F534	**Fairchild (1022,5310)**	
	MC54F534	† **Motorola (1127)**	125
	MC74F534	**Motorola (1127)**	
		(Continued)	
Octal Edge-Triggered, Inverting, Three-State			
TTL-F		(Cont'd)	
	54F534	† Signetics	
	74F534	**Signetics (1159)**	
	74F564	**Signetics (1159)**	
TTL-LS	54LS534	† Fairchild	130
	74LS534	**Fairchild (5311)**	
	SN54LS534	† MMI	
TTL-S	AM25S534	AMD	
	SN74S534	AMD	
	SN54S534	MMI	135
	SN74S534	MMI	
	SN74S536	MMI	
	54S534	† Signetics	
	74S534	Signetics	
Octal Edge-Triggered, with Clear			
TTL	SN74273	TI	140
TTL-ALS	DM54ALS273	† National	
	DM74ALS273	National	
	SN54ALS273	† **TI (713)**	
	SN74ALS273	TI	
TTL-F	**54F273**	**Fairchild (1022)**	145
	74F273	**Fairchild (1022)**	
	54F273	† Signetics	
	74F273	**Signetics (1158)**	
TTL-LS	AM25LS273	AMD	
	54LS273	† **Fairchild (614)**	150
	74LS273	**Fairchild (5311)**	
	GD74LS273	**Goldstar (1066)**	
	HD74LS273	Hitachi	
	SN54LS273	† MMI	
	SN54LS273	† **Motorola (1126)**	155
	SN74LS273	**Motorola (1126)**	
	T74LS273	SGS	
	54LS273	† Signetics	
	74LS273	Signetics	
	SN54LS273	† **TI (715)**	160
	SN74LS273	TI	
TTL-S	SN54S273	† MMI	
	54S273	† Signetics	
	74S273	**Signetics (1158)**	
Octal Edge-Triggered, Three-State			
TTL-ALS	M74ALS574	Mitsubishi	165
	DM54ALS374	† National	
	DM54ALS574	† National	
	DM74ALS374	National	
	DM74ALS574	National	
	SN54ALS374	† **TI (713)**	170
	SN54ALS574	† **TI (713)**	
	SN54ALS575	† **TI (713)**	
	SN54ALS577	† **TI (713)**	
	SN74ALS374	TI	
	SN74ALS574A	TI	175
	SN74ALS575A	TI	
	SN74ALS577A	TI	
TTL-AS	DM54AS374	† National	
	DM54AS574	† National	
	DM54AS575	† National	180
	DM54AS577	† National	
	DM74AS374	National	
	DM74AS574	National	
	DM74AS575	National	
	DM74AS577	National	185
	SN54AS374	† **TI (713)**	
	SN54AS574	† **TI (713)**	
	SN54AS575	† **TI (713)**	
	SN74AS374	TI	
	SN74AS574	TI	190
	SN74AS575	TI	
	SN74AS577	TI	
		(Continued)	

† Military Temperature Range (−55° to 125°C)

* Typical Value

Bold face indicates additional data is provided on the page noted.

DIGITAL-TTL (Cont'd)

Flip-Flops, D-Type (Cont'd)

Function	Device	Source	Line
Octal Edge-Triggered, Three-State (Cont'd)			
TTL-F	**54F374**	† **Fairchild (607,611,620,623,1022)**	
	54F574	**Fairchild (1022)**	
	74F374	**Fairchild (1022,5310)**	
	74F574	**Fairchild (1022)**	
	MC54F374	† **Motorola (1126)**	5
	MC74F374	**Motorola (1126)**	
	54F374	† Signetics	
	74F374	**Signetics (1158)**	
TTL-LS	**54LS374**	† **Fairchild (614)**	
	74LS374	**Fairchild (5311)**	10
	74LS574	**Fairchild (5311)**	
	GD74LS374	**Goldstar (1066)**	
	HD74LS374	Hitachi	
	SN54LS374	† MMI	
	SN54LS374	† **Motorola (1126)**	15
	SN74LS374	**Motorola (1126)**	
	DM54LS374	† National	
	DM74LS374	National	
	T74LS374	SGS	
	54LS374	† Signetics	20
	74LS374	**Signetics (1158)**	
	SN54LS374	† **TI (715)**	
	SN74LS374	TI	
TTL-S	AM24S374	AMD	
	AM25S374	AMD	25
	SN74S374	AMD	
	SN54S374	† MMI	
	SN74S374	MMI	
	SN74S532	MMI	
	DM54S374	† National	30
	DM74S374	National	
	54S374	† Signetics	
	74S374	**Signetics (1158)**	
	SN54S374	† **TI (716)**	
	SN74S374	TI	35
Octal with Enable			
TTL-F	**54F377**	**Fairchild (1022)**	
	74F377	**Fairchild (1022)**	
	54F377	† Signetics	
	74F377	**Signetics (1158)**	
TTL-LS	**54LS377**	† **Fairchild (614)**	40
	74LS377	**Fairchild (5311)**	
	GD74LS377	**Goldstar (1066)**	
	SN54LS377	† MMI	
	SN54LS377	† **Motorola (1126)**	
	SN74LS377	**Motorola (1126)**	45
	T74LS377	SGS	
	54LS377	† Signetics	
	74LS377	**Signetics (1158)**	
	SN54LS377	† **TI (715)**	
	SN74LS377	TI	50
TTL-S	SN54S377	† MMI	
8-Bit Parallel, Inverting			
TTL-AS	SN74AS826	TI	
TTL-F	**74F826**	**Signetics (1160)**	
8-Bit Parallel, Non-inverting			
TTL-AS	SN74AS825	TI	
TTL-F	**54F825**	† **Fairchild (1022)**	55
	74F825	**Fairchild (1022)**	
	74F825	**Signetics (1160)**	
9-Bit Parallel, Inverting			
TTL-AS	SN74AS824	TI	
TTL-F	**74F824**	**Signetics (1160)**	
9-Bit Parallel, Non-inverting			
TTL-AS	SN74AS823	TI	60
TTL-F	**54F823**	† **Fairchild (1022)**	
	74F823	**Fairchild (1022)**	
	74F823	**Signetics (1160)**	
10-Bit Parallel, Inverting			
F	**74F822**	**Signetics (1160)**	
TTL-AS	**SN54AS822**	† **TI (713)**	65
	SN74AS822	TI	
10-Bit Parallel, Non-inverting			
TTL-AS	**SN54AS821**	† **TI (713)**	
	SN74AS821	TI	
TTL-F	**54F821**	† **Fairchild (1022)**	
	74F821	**Fairchild (1022)**	70
	74F821	**Signetics (1160)**	

Flip-Flops, J-K Type

Function	Device	Source	Line
AND Gated, Edge-Triggered with Preset and Clear			
TTL	5470	† Fairchild	
	7470	Fairchild	
	MC7470	Motorola	
	DM5470	† National	75
	DM7470	National	
	S8270	† Signetics	
	SN5470	† **TI (712)**	
	SN7470	TI	
AND Gated Master-Slave with Data Lockout			
TTL	SN74110	TI	80
AND Gated Master-Slave with Preset and Clear			
TTL	5472	† Fairchild	
	7472	Fairchild	
	MC7472	Motorola	
	DM5472	† National	
	DM7472	National	85
	SN5472	† **TI (712)**	
	SN7472	TI	
TTL-H	54H72	† Fairchild	
	74H72	Fairchild	
Master-Slave			
TTL	54104	† Fairchild	90
	54105	† Fairchild	
	9000M	† Fairchild	
	9001C	Fairchild	
	9001M	† Fairchild	
Master-Slave, AND-OR Input			
TTL-H	54H71	† Fairchild	95
	SN74H71	TI	
Negative Edge-Triggered, AND Input			
TTL-H	54H102	† Fairchild	
	SN74H102	TI	
Negative Edge-Triggered, AND-OR Input			
TTL-H	54H101	† Fairchild	
	74H101	Fairchild	100
	SN74H101	TI	
Dual J-K Positive Edge-Triggered, Preset and Clear			
TTL	9024C	Fairchild	
	9024M	† Fairchild	
	DM54109	† National	
	DM74109	National	105
	54109	† Signetics	
	74109	**Signetics (1156)**	
	SN54109	† **TI (712)**	
	SN74109	TI	
TTL-ALS	M74ALS109	Mitsubishi	110
	DM54ALS109	† National	
	DM74ALS109	National	
	SN54ALS109A	† **TI (713)**	
	SN74ALS109A	TI	

(Continued)

Function	Device	Source	Line
Dual J-K Positive Edge-Triggered, Preset and Clear (Cont'd)			
TTL-AS	DM54AS109	† National	115
	DM74AS109	National	
	SN54AS109	† **TI (713)**	
	SN74AS109	TI	
TTL-F	**54F109**	† **Fairchild (607,610,620,623,1021)**	
	74F109	**Fairchild (1021,5310)**	120
	MC54F109	† **Motorola (1126)**	
	MC74F109	**Motorola (1126)**	
	74F109	**Signetics (1156)**	
TTL-LS	**54LS109**	† **Fairchild (608,612,621,623)**	
	74LS109	**Fairchild (5311)**	125
	GD74LS109	**Goldstar (1066)**	
	HD74LS109A	Hitachi	
	SN54LS109A	† **Motorola (1126)**	
	SN74LS109A	**Motorola (1126)**	
	DM54LS109	† National	130
	DM74LS109	National	
	DN74LS109	Panasonic	
	54LS109	† SGS	
	74LS109	SGS	
	54LS109	† Signetics	135
	74LS109	**Signetics (1156)**	
	SN54LS109A	† **TI (715)**	
	SN74LS109A	TI	
TTL-S	54S109	† Fairchild	
	74S109	Fairchild	140
Dual J-K with Preset, Common Clock and Common Clear			
TTL-H	54H78	† Fairchild	
	SN74H78	TI	
TTL-LS	HD74LS78A	Hitachi	
	SN54LS78A	† **Motorola (1126)**	
	SN74LS78A	**Motorola (1126)**	145
	DM54LS78	† National	
	DM74LS78	National	
	DN74LS78	Panasonic	
	SN54LS78A	† **TI (715)**	
	SN74LS78A	TI	150
Dual Master-Slave with Clear			
TTL	54107	† Fairchild	
	5473	† **Fairchild (616)**	
	74107	Fairchild	
	7473	Fairchild	
	MC74107	Motorola	155
	MC7473	Motorola	
	DM54107	† National	
	DM5473	† National	
	DM74107	National	
	DM7473	National	160
	54107	† Signetics	
	5473	† Signetics	
	74107	**Signetics (1156)**	
	7473	**Signetics (1156)**	
	SN54107	† **TI (712)**	165
	SN5473	† **TI (712)**	
	SN74107	TI	
	SN7473	TI	
TTL-H	54H73	† Fairchild	
	74H73	Fairchild	170
	MC3061	Motorola	
	MC3062	Motorola	
	MC3161	† Motorola	
	MC3162	† Motorola	
	SN74H73	TI	175
TTL-LS	74LS107	Fairchild	
	GD74LS107	**Goldstar (1066)**	
	GD74LS73	**Goldstar (1066)**	
	HD74LS107A	Hitachi	

(Continued)

† Military Temperature Range (−55° to 125°C)

* Typical Value

Bold face indicates additional data is provided on the page noted.

DIGITAL–TTL (Cont'd)

Flip-Flops, J-K Type (Cont'd)

Function	Device	Source	Line
Dual Master-Slave with Clear			
TTL-LS		(Cont'd)	
	HD74LS73A	Hitachi	
	SN54LS107A	† **Motorola** (1126)	
	SN54LS73A	† **Motorola** (1126)	
	SN74LS107A	**Motorola** (1126)	
	SN74LS73A	**Motorola** (1126)	5
	DM54LS107A	† National	
	DM54LS73A	† National	
	DM74LS107A	National	
	DM74LS73A	National	
	DN74LS107	Panasonic	10
	DN74LS73	Panasonic	
	54LS107	† Signetics	
	54LS73	† Signetics	
	74LS107	**Signetics** (1156)	
	74LS73	**Signetics** (1156)	15
	SN54LS107A	† **TI** (715)	
	SN54LS73A	† **TI** (715)	
	SN74LS107A	TI	
	SN74LS73A	TI	
Dual Master-Slave with Data Lockout			
TTL	**SN54111**	† **TI** (712)	20
	SN74111	TI	
Dual Master-Slave with Preset and Clear			
TTL	**5476**	† **Fairchild** (616)	
	7476	Fairchild	
	MC7476	Motorola	
	DM5476	† National	25
	DM7476	National	
	5476	† Signetics	
	7476	**Signetics** (1156)	
	SN5476	† **TI** (712)	
	SN7476	TI	30
TTL-H	54H76	† Fairchild	
	SN74H76	TI	
TTL-LS	HD74LS76A	Hitachi	
	SN54LS76A	† **Motorola** (1126)	
	SN74LS76A	**Motorola** (1126)	35
	DM54LS76	† National	
	DM74LS76	National	
	DN74LS76	Panasonic	
	54LS76	† Signetics	
	74LS76	**Signetics** (1156)	40
	SN54LS76A	† **TI** (715)	
	SN74LS76A	TI	
Dual Negative Edge-Triggered, Preset, Common Clear, Common Clock			
TTL-H	54H108	† Fairchild	
	74H108	Fairchild	
	SN74H108	TI	45
Dual Negative Edge-Triggered, Separate Preset and Clock, (no clear)			
TTL-ALS	M74ALS113A	Mitsubishi	
	DM54ALS113	† National	
	SN74ALS113A	TI	
TTL-F	**54F113**	† **Fairchild** (1021)	
	74F113	**Fairchild** (1021,5310)	50
	MC54F113	† **Motorola** (1126)	
	MC74F113	**Motorola** (1126)	
	74F113	**Signetics** (1156)	
TTL-LS	**54LS113**	† **Fairchild** (608,612,621,623)	
	74LS113	**Fairchild** (5311)	55
	HD74LS113	Hitachi	
	SN54LS113A	† **Motorola** (1126)	
	SN74LS113A	**Motorola** (1126)	
	DM54LS113A	† National	
	DM74LS113A	National	60
		(Continued)	
Dual Negative Edge-Triggered, Separate Preset and Clock, (no clear)			
TTL-LS		(Cont'd)	
	DN74LS113	Panasonic	
	54LS113	† SGS	
	74LS113	SGS	
	54LS113	† Signetics	
	74LS113	**Signetics** (1156)	65
	SN74LS113A	TI	
TTL-S	54S113	† Fairchild	
	74S113	Fairchild	
	DM54S113	† National	
	DM74S113	National	70
	54S113	† Signetics	
	74S113	**Signetics** (1156)	
	SN54S113	† **TI** (716)	
	SN74S113	TI	
Dual Negative Edge-Triggered, with Clear			
TTL-H	54H103	† Fairchild	75
	74H103	Fairchild	
	SN74H103	TI	
Dual Negative Edge-Triggered with Preset and Clear			
TTL-ALS	M74ALS112A	Mitsubishi	
	SN54ALS112A	† **TI** (713)	
	SN74ALS112A	TI	80
TTL-F	**54F112**	† **Fairchild** (1021)	
	74F112	**Fairchild** (1021,5310)	
	MC54F112	† **Motorola** (1126)	
	MC74F112	**Motorola** (1126)	
	74F112	**Signetics** (1156)	85
TTL-H	54H106	† Fairchild	
	74H106	Fairchild	
	DM54H106	† National	
	DM74H106	National	
	SN74H106	TI	90
TTL-LS	**54LS112**	† **Fairchild** (608,612,621,623)	
	74LS112	**Fairchild** (5311)	
	GD74LS112	**Goldstar** (1066)	
	HD74LS112	Hitachi	
	SN54LS112A	† **Motorola** (1126)	95
	SN74LS112A	**Motorola** (1126)	
	DM54LS112	† National	
	DM74LS112	National	
	DN74LS112	Panasonic	
	54LS112	Signetics	100
	74LS112	**Signetics** (1156)	
	SN74LS112A	TI	
TTL-S	54S112	† Fairchild	
	74S112	Fairchild	
	GD74S112	**Goldstar** (1066)	105
	DM54S112	† National	
	DM74S112	National	
	54S112	† Signetics	
	74S112	**Signetics** (1156)	
	SN54S112	† **TI** (716)	110
	SN74S112	TI	
Dual Negative Edge-Triggered with Preset, Common Clock and Common Clear			
TTL-ALS	M74ALS114A	Mitsubishi	
	SN54ALS114A	† **TI** (713)	
	SN74ALS114A	TI	
TTL-F	**54F114**	† **Fairchild** (1021)	115
	74F114	**Fairchild** (1021,5310)	
	MC54F114	† **Motorola** (1126)	
	MC74F114	**Motorola** (1126)	
	74F114	**Signetics** (1156)	
TTL-LS	**54LS114**	† **Fairchild** (608,612,621,623)	120
		(Continued)	
Dual Negative Edge-Triggered with Preset, Common Clock and Common Clear			
TTL-LS		(Cont'd)	
	74LS114	**Fairchild** (5311)	
	HD74LS114	Hitachi	
	SN54LS114A	† **Motorola** (1126)	
	SN74LS114A	**Motorola** (1126)	
	DM54LS114A	† National	125
	DM74LS114A	National	
	DN74LS114	Panasonic	
	54LS112	† SGS	
	74LS112	SGS	
	T54LS114	† SGS	130
	T74LS114	SGS	
	SN74LS114A	TI	
TTL-S	54S114	† Fairchild	
	SN54S114	† **TI** (716)	
	SN74S114	TI	135
Quad J-K Edge-Triggered with Clear			
TTL	**SN54376**	† **TI** (712)	
	SN74376	TI	
Quad J-K Edge-Triggered with Preset and Clear			
TTL	SN74276	TI	

Gates, AND

Function	Device	Source	Line
Dual 4-Input			
TTL	5421	† Fairchild	
	7421	Fairchild	140
	5421	† Signetics	
	7421	**Signetics** (1156)	
TTL-ALS	M74ALS21	Mitsubishi	
	DM54ALS21	† National	
	DM54ALS22	† National	145
	DM74ALS21	National	
	DM74ALS22	National	
	SN54ALS21	† **TI** (713)	
	SN74ALS21	TI	
TTL-AS	DM54AS21	† National	150
	DM74AS21	National	
	SN54AS21	† **TI** (713)	
	SN74AS21	TI	
TTL-H	54H21	† Fairchild	
	74H21	Fairchild	155
	DM54H21	† National	
	DM74H21	National	
	SN74H21	TI	
TTL-LS	**54LS21**	† **Fairchild** (608,612,621,623)	
	74LS21	**Fairchild** (5311)	160
	GD74LS21	**Goldstar** (1066)	
	HD74LS21	Hitachi	
	SN54LS21	† **Motorola** (1122)	
	SN74LS21	**Motorola** (1122)	
	DM54LS21	† National	165
	DM74LS21	National	
	DN74LS21	Panasonic	
	54LS21	† SGS	
	74LS21	SGS	
	54LS21	† Signetics	170
	74LS21	**Signetics** (1156)	
	SN54LS21	† **TI** (715)	
	SN74LS21	TI	
Dual 4-Input Power			
TTL-H	MC3026	Motorola	
	MC3126	† Motorola	175
Triple 3-Input			
TTL	5411	† Fairchild	
	7411	Fairchild	
	HD74LS11	Hitachi	
	DM5411	† National	
		(Continued)	

† Military Temperature Range (−55° to 125°C)

* Typical Value

Bold face indicates additional data is provided on the page noted.

DIGITAL-TTL (Cont'd)

Function	Device	Source	Line
Gates, AND (Cont'd)			
Triple 3-Input			
TTL		(Cont'd)	
	DM7411	National	
	7411	**Signetics (1156)**	
TTL-ALS	M74ALS11	Mitsubishi	
	DM54ALS1011	† National	
	DM54ALS11	† National	5
	DM74ALS1011	National	
	DM74ALS11	National	
	SN54ALS11A	**† TI (712)**	
	SN74ALS1011A	TI	
	SN74ALS11A	TI	10
TTL-AS	DM54AS11	† National	
	DM74AS11	National	
	SN54AS11	**† TI (713)**	
	SN74AS11	TI	
TTL-F	**54F11**	**† Fairchild (607,610,620,623,1021)**	15
	74F11	**Fairchild (1021,5310)**	
	MC54F11	**† Motorola (1122)**	
	MC74F11	**Motorola (1122)**	
	74F11	**Signetics (1156)**	
TTL-H	54H11	† Fairchild	20
	74H11	Fairchild	
	DM54H11	† National	
	DM74H11	National	
	SN74H11	TI	
TTL-LS	**54LS11**	**† Fairchild (607,612,621,623)**	25
	74LS11	**Fairchild (5311)**	
	GD74LS11	**† Goldstar (1066)**	
	SN54LS11	**† Motorola (1122)**	
	SN74LS11	**Motorola (1122)**	
	DM54LS11	† National	30
	DM74LS11	National	
	DN74LS11	† Panasonic	
	54LS11	† SGS	
	74LS11	SGS	
	54LS11	† Signetics	35
	74LS11	**Signetics (1156)**	
	SN54LS11	**† TI (715)**	
	SN74LS11	TI	
TTL-S	54S11	† Fairchild	
	74S11	Fairchild	40
	DM54S11	† National	
	DM74S11	National	
	54S11	† Signetics	
	74S11	**Signetics (1156)**	
	SN54S11	**† TI (716)**	45
	SN74S11	TI	
Triple 3-Input, Open Collector			
TTL-ALS	M74ALS15	Mitsubishi	
	DM54ALS15	† National	
	DM74ALS15	National	
	SN54ALS15A	**† TI (712)**	50
	SN74ALS15A	TI	
TTL-H	SN74H15	TI	
TTL-LS	**54LS15**	**† Fairchild (612)**	
	74LS15	**Fairchild (5311)**	
	HD74LS15	Hitachi	55
	SN54LS15	**† Motorola (1122)**	
	SN74LS15	**Motorola (1122)**	
	DM54LS15	† National	
	DM74LS15	National	
	DN74LS15	Panasonic	60
	54LS15	† SGS	
	74LS15	SGS	
	SN54LS15	**† TI (715)**	
	SN74LS15	TI	
Triple 3-Input, Open Collector		(Cont'd)	
TTL-S	54S15	† Fairchild	65
	74S15	Fairchild	
	DM54S15	† National	
	DM74S15	National	
	SN54S15	**† TI (716)**	
	SN74S15	TI	70
Quad 2-Input			
TTL	**5408**	**† Fairchild (609,616,622,623)**	
	7408	Fairchild	
	MC7408	Motorola	
	DM5408	† National	
	DM7408	National	75
	5408	Signetics	
	7408	**Signetics (1156)**	
	SN5408	**† TI (712)**	
	SN7408	TI	
TTL-ALS	M74ALS08	Mitsubishi	80
	DM54ALS08	† National	
	DM54ALS1008	† National	
	DM54ALS576	† National	
	DM74ALS08	National	
	DM74ALS1008	National	85
	DM74ALS576	National	
	SN54ALS08	**† TI (712)**	
	SN74ALS08	TI	
	SN74ALS1008A	TI	
TTL-AS	DM54AS08	† National	90
	DM54AS1008	† National	
	DM74AS08	National	
	DM74AS1008	National	
	SN54AS08	**† TI (713)**	
	SN74AS08	TI	95
	SN74AS1008A	TI	
TTL-F	**54F08**	**† Fairchild (607,610,620,623,1021)**	
	74F08	**Fairchild (1021,5310)**	
	MC54F08	**† Motorola (1122)**	
	MC74F08	**Motorola (1122)**	100
	74F08	**Signetics (1156)**	
TTL-H	54H08	† Fairchild	
	74H08	Fairchild	
	MC3001	Motorola	
	MC3101	† Motorola	105
	DM54H08	† National	
	DM74H08	National	
TTL-LS	**54LS08**	**† Fairchild (607,612,621,623)**	
	74LS08	**Fairchild (5311)**	
	GD74LS08	**Goldstar (1066)**	110
	HD74LS08	Hitachi	
	SN54LS08	**† Motorola (1122)**	
	SN74LS08	**Motorola (1122)**	
	DM54LS08	† National	
	DM74LS08	National	115
	DN74LS08	Panasonic	
	54LS08	† SGS	
	74LS08	SGS	
	54LS08	† Signetics	
	74LS08	**Signetics (1156)**	120
	SN54LS08	**† TI (715)**	
	SN74LS08	TI	
TTL-S	54S08	† Fairchild	
	74S08	Fairchild	
	GD74S08	**Goldstar (1066)**	125
	DM54S08	† National	
	DM74S08	National	
	54S08	† Signetics	
	74S08	**Signetics (1156)**	
Quad 2-Input			
TTL-S		(Cont'd)	
	SN54S08	**† TI (716)**	130
	SN74S08	TI	
Quad 2-Input, Open Collector			
TTL	**5409**	**† Fairchild (609,616,622,623)**	
	7409	Fairchild	
	MC7409	Motorola	
	DM5409	† National	135
	DM7409	National	
	SN5409	**† TI (712)**	
	SN7409	TI	
TTL-ALS	M74ALS09	Mitsubishi	
	DM54ALS09	† National	140
	DM74ALS09	National	
	SN54ALS09	**† TI (712)**	
	SN74ALS09	TI	
TTL-H	54H09	† Fairchild	
	74H09	Fairchild	145
TTL-LS	**54LS09**	**† Fairchild (612)**	
	74LS09	**Fairchild (5311)**	
	GD74LS09	**† Goldstar (1066)**	
	HD74LS09	Hitachi	
	SN54LS09	**† Motorola (1122)**	150
	SN74LS09	**Motorola (1122)**	
	DM54LS09	† National	
	DM74LS09	National	
	DM74S09	National	
	DN74LS09	† Panasonic	155
	54LS09	† SGS	
	74LS09	SGS	
	54LS09	† Signetics	
	74LS09	**Signetics (1156)**	
	SN54LS09	**† TI (715)**	160
	SN74LS09	TI	
TTL-S	54S09	† Fairchild	
	DM54S09	† National	
	SN54S09	**† TI (716)**	
	SN74S09	TI	165
Gates, NAND			
Dual 2-Input			
TTL-ALS	SN74ALS8003	TI	
Dual 4-Input			
TTL	**5420**	**† Fairchild (609,616,622,623)**	
	7420	Fairchild	
	MC7420	Motorola	
	DM5420	† National	170
	DM7420	National	
	5420	† Signetics	
	7420	**Signetics (1156)**	
	SN5420	**† TI (712)**	
	SN7420	TI	175
TTL-ALS	M74ALS20A	Mitsubishi	
	DM54ALS1020	† National	
	DM54ALS20	† National	
	DM74ALS1020	National	
	DM74ALS20	National	180
	SN54ALS20A	**† TI (713)**	
	SN74ALS1020A	TI	
	SN74ALS20A	TI	
TTL-AS	DM54AS20	† National	
	DM74AS20	National	185
	SN54AS20	**† TI (713)**	
	SN74AS20	TI	

(Continued)

† Military Temperature Range (−55° to 125°C)

* Typical Value

Bold face indicates additional data is provided on the page noted.

DIGITAL–TTL (Cont'd)

Gates, NAND (Cont'd)

Function	Device	Source	Line
Dual 4-Input		(Cont'd)	
TTL-F	**54F20**	**† Fairchild (607,610,620,623,1021)**	
	74F20	**Fairchild (1021,5310)**	
	MC54F20	**† Motorola (1122)**	
	MC74F20	**Motorola (1122)**	
	54F20	† Signetics	5
	74F20	**Signetics (1156)**	
TTL-H	54H20	† Fairchild	
	74H20	Fairchild	
	DM54H20	† National	
	DM74H20	National	10
	SN74H20	TI	
TTL-LS	**54LS20**	**† Fairchild (608,612,621,623)**	
	74LS20	**Fairchild (5311)**	
	GD74LS20	**Goldstar (1066)**	
	HD74LS20	Hitachi	15
	SN54LS20	**† Motorola (1122)**	
	SN74LS20	**Motorola (1122)**	
	DM54LS20	† National	
	DM74LS20	National	
	DN74LS20	Panasonic	20
	54LS20	† SGS	
	74LS20	SGS	
	54LS20	† Signetics	
	74LS20	**Signetics (1156)**	
	SN54LS20	**† TI (715)**	25
	SN74LS20	TI	
TTL-S	54S20	† Fairchild	
	74S20	Fairchild	
	DM54S20	† National	
	DM74S20	National	30
	54S20	† Signetics	
	74S20	**Signetics (1156)**	
	SN54S20	**† TI (716)**	
	SN74S20	TI	
Dual 4-Input Buffer			
TTL	**5440**	**† Fairchild (609,616,622,623)**	35
	7440	Fairchild	
	MC7440	Motorola	
	DM5440	† National	
	DM7440	National	
	5440	† Signetics	40
	7440	**Signetics (1156)**	
	SN5440	**† TI (712)**	
	SN7440	TI	
TTL-ALS	M74ALS40	Mitsubishi	
	DM54ALS40	† National	45
	DM74ALS40	National	
	SN74ALS40A	TI	
TTL-F	**54F40**	**Fairchild (1021)**	
	74F40	**Fairchild (1021)**	
	74F40	**Signetics (1156)**	50
TTL-H	54H40	† Fairchild	
	74H40	Fairchild	
	MC3025	Motorola	
	DM54H40	† National	
	DM74H40	National	55
	SN74H40	TI	
TTL-LS	**54LS40**	**† Fairchild (612)**	
	74LS40	**Fairchild (5311)**	
	HD74LS40	Hitachi	
	SN54LS40	**† Motorola (1122)**	60
	SN74LS40	**Motorola (1122)**	
	DM54LS40	† National	
	DM74LS40	National	
	DN74LS40	Panasonic	
		(Continued)	
Dual 4-Input Buffer			
TTL-LS		(Cont'd)	
	54LS40	† SGS	65
	74LS40	SGS	
	54LS40	† Signetics	
	74LS40	**Signetics (1156)**	
	SN54LS40	**† TI (715)**	
	SN74LS40	TI	70
TTL-S	54S40	† Fairchild	
	74S40	Fairchild	
	DM54S40	† National	
	DM74S40	National	
	54S40	† Signetics	75
	74S40	**Signetics (1156)**	
	SN54S40	**† TI (716)**	
	SN74S40	TI	
Dual 4-Input, Open Collector			
TTL	5422	† Fairchild	
	7422	Fairchild	80
	SN5422	**† TI (712)**	
	SN7422	TI	
TTL-ALS	M74ALS22A	Mitsubishi	
	SN54ALS22B	**† TI (713)**	
	SN74ALS22B	TI	85
TTL-H	54H22	† Fairchild	
	74H22	Fairchild	
	SN74H22	TI	
TTL-LS	**54LS22**	**† Fairchild (608,612,621,623)**	
	74LS22	Fairchild	90
	HD74LS22	Hitachi	
	SN54LS22	**† Motorola (1122)**	
	SN74LS22	**Motorola (1122)**	
	DM54LS22	† National	
	DM74LS22	National	95
	DN74LS22	Panasonic	
	54LS22	† SGS	
	74LS22	SGS	
	SN54LS22	**† TI (715)**	
	SN74LS22	TI	100
TTL-S	54S22	† Fairchild	
	74S22	Fairchild	
	DM54S22	† National	
	DM74S22	National	
	SN54S22	**† TI (716)**	105
	SN74S22	TI	
Triple 3-Input			
TTL	**5410**	**† Fairchild (609,616,622,623)**	
	7410	Fairchild	
	MC5410	† Motorola	
	MC54F10	**† Motorola (1122)**	110
	MC7410	Motorola	
	DM5410	† National	
	DM7410	National	
	5410	† Signetics	
	7410	**Signetics (1156)**	115
	SN5410	**† TI (712)**	
	SN7410	TI	
TTL-ALS	M74ALS10	Mitsubishi	
	DM54ALS10	† National	
	DM54ALS1010	† National	120
	DM74ALS10	National	
	DM74ALS1010	National	
	SN54ALS1010A	**† TI (713)**	
	SN54ALS10A	**† TI (712)**	
	SN74ALS1010A	TI	125
	SN74ALS10A	TI	
TTL-AS	DM54AS10	† National	
	DM74AS10	National	
	SN54AS10	**† TI (713)**	
	SN74AS10	TI	130
		(Continued)	
Triple 3-Input		(Cont'd)	
TTL-F	**54F10**	**† Fairchild (607,610,620,623,1021)**	
	74F10	**Fairchild (1021,5310)**	
	MC74F10	**Motorola (1122)**	
	74F10	**Signetics (1156)**	
TTL-H	54H10	† Fairchild	135
	74H10	Fairchild	
	DM54H10	† National	
	DM74H10	National	
	SN74H10	TI	
TTL-LS	**54LS10**	**† Fairchild (607,612,621,623)**	140
	74LS10	**Fairchild (5311)**	
	GD74LS10	**Goldstar (1066)**	
	HD74LS10	Hitachi	
	SN54LS10	**† Motorola (1122)**	
	SN74LS10	**Motorola (1122)**	145
	DM54LS10	† National	
	DM74LS10	National	
	DN74LS10	Panasonic	
	54LS10	† SGS	
	74LS10	SGS	150
	54LS10	† Signetics	
	74LS10	**Signetics (1156)**	
	SN54LS10	**† TI (715)**	
	SN74LS10	TI	
TTL-S	54S10	† Fairchild	155
	74S10	Fairchild	
	GD74S10	**Goldstar (1066)**	
	DM54S10	† National	
	DM74S10	National	
	54S10	† Signetics	160
	74S10	**Signetics (1156)**	
	SN54S10	**† TI (716)**	
	SN74S10	TI	
Triple 3-Input, Open Collector			
TTL	5412	† Fairchild	
	7412	Fairchild	165
	SN5412	**† TI (712)**	
	SN7412	TI	
TTL-ALS	M74ALS12	Mitsubishi	
	DM54ALS12	† National	
	DM74ALS12	National	170
	SN54ALS12A	**† TI (712)**	
	SN74ALS12A	TI	
TTL-LS	54LS12	† Fairchild	
	74LS12	**Fairchild (5311)**	
	HD74LS12	Hitachi	175
	SN54LS12	**† Motorola (1122)**	
	SN74LS12	**Motorola (1122)**	
	DM54LS12	† National	
	DM74LS12	National	
	DN74LS12	Panasonic	180
	SN54LS12	**† TI (715)**	
	SN74LS12	TI	
Quad 2-Input			
TTL	**5400**	**† Fairchild (609,616,622,623)**	
	7400	Fairchild	
	MC7400	Motorola	185
	DM5400	† National	
	DM7400	National	
	DM9002C	National	
	5400	† Signetics	
	7400	**Signetics (1156)**	190
	SN5400	**† TI (712)**	
	SN7400	TI	
TTL-ALS	M74ALS00A	Mitsubishi	
	DM54ALS00	† National	
	DM54ALS1000	† National	195
		(Continued)	

† Military Temperature Range (−55° to 125°C)

* Typical Value

Bold face indicates additional data is provided on the page noted.

DIGITAL-TTL (Cont'd)

Gates, NAND (Cont'd)

Function	Device	Source	Line
Quad 2-Input			
TTL-ALS		(Cont'd)	
	DM74ALS00	National	
	DM74ALS1000	National	
	SN74ALS00A	TI	
	SN74ALS1000A	TI	
TTL-AS	DM54AS00	† National	5
	DM54AS1000	† National	
	DM74AS00	National	
	DM74AS1000	National	
	SN74AS00	TI	
	SN74AS1000A	TI	10
TTL-F	**54F00**	**† Fairchild (607,610,620,623,1021)**	
	74F00	**Fairchild (1021,5310)**	
	MC54F00	**† Motorola (1122)**	
	MC74F00	**Motorola (1122)**	
	54F00	Signetics	15
	74F00	**Signetics (1156)**	
TTL-H	54H00	† Fairchild	
	74H00	Fairchild	
	MC3000	Motorola	
	MC3100	† Motorola	20
	DM54H00	† National	
	DM74H00	National	
	SN74H00	TI	
TTL-LS	**54LS00**	**† Fairchild (607,612,621,623)**	
	74LS00	**Fairchild (5311)**	25
	GD74LS00	**Goldstar (1066)**	
	HD74LS00	Hitachi	
	SN54LS00	**† Motorola (1122)**	
	DM54LS00	† National	
	DM74LS00	National	30
	DN74LS00	Panasonic	
	54LS00	† SGS	
	74LS00	SGS	
	54LS00	† Signetics	
	74LS00	**Signetics (1156)**	35
	SN54LS00	**† TI (715)**	
	SN74LS00	TI	
TTL-S	54S00	† Fairchild	
	74S00	† Fairchild	
	GD74S00	**Goldstar (1066)**	40
	DM54S00	† National	
	DM74S00	National	
	54S00	† Signetics	
	74S00	**Signetics (1156)**	
	SN54S00	**† TI (716)**	45
	SN74S00	TI	
Quad 2-Input Buffer			
TTL	**5437**	**† Fairchild (609,616,622,623)**	
	7437	Fairchild	
	MC7437	Motorola	
	DM5437	† National	50
	DM7437	National	
	5437	† Signetics	
	7437	**Signetics (1156)**	
	SN5437	**† TI (712)**	
	SN7437	TI	55
TTL-ALS	M74ALS37	Mitsubishi	
	DM54ALS37	† National	
	DM74ALS37	National	
	SN54ALS37A	**† TI (713)**	
	SN74ALS37A	TI	60
TTL-F	**54F37**	**Fairchild (1021)**	
	74F37	**Fairchild (1021)**	
	74F37	**Signetics (1156)**	
		(Continued)	
Quad 2-Input Buffer		(Cont'd)	
TTL-LS	**54LS37**	**† Fairchild (612)**	
	74LS37	**Fairchild (5311)**	65
	HD74LS37	Hitachi	
	SN54LS37	**† Motorola (1122)**	
	SN74LS37	**Motorola (1122)**	
	DM54LS37	† National	
	DM74LS37	National	70
	DN74LS37	Panasonic	
	54LS37	† SGS	
	74LS37	SGS	
	54LS37	† Signetics	
	74LS37	**Signetics (1156)**	75
	SN54LS37	**† TI (715)**	
	SN74LS37	TI	
TTL-S	54S37	† Signetics	
	74S37	**Signetics (1156)**	
	SN54S37	**† TI (716)**	80
	SN74S37	TI	
Quad 2-Input Buffer, Open Collector			
TTL	5438	† Fairchild	
	7438	Fairchild	
	7439	Fairchild	
	MC7438	Motorola	85
	DM5438	† National	
	DM7438	National	
	5438	† Signetics	
	5439	† Signetics	
	7438	**Signetics (1156)**	90
	7439	**Signetics (1156)**	
	SN5438	**† TI (712)**	
	SN7438	TI	
	SN7439	TI	
TTL-ALS	M74ALS38	Mitsubishi	95
	DM54ALS38	† National	
	DM74ALS38	National	
	SN54ALS38A	**† TI (713)**	
	SN74ALS38A	TI	
TTL-F	**54F38**	**Fairchild (1021)**	100
	74F38	**Fairchild (1021)**	
	74F38	**Signetics (1156)**	
TTL-LS	**54LS38**	**† Fairchild (612)**	
	74LS38	**Fairchild (5311)**	
	GD74LS38	**Goldstar (1066)**	105
	HD74LS38	Hitachi	
	SN54LS38	**† Motorola (1122)**	
	SN74LS38	**Motorola (1122)**	
	DM54LS38	† National	
	DM74LS38	National	110
	DN74LS38	Panasonic	
	54LS38	† Signetics	
	74LS38	**Signetics (1156)**	
	SN54LS38	**† TI (715)**	
	SN74LS38	TI	115
TTL-S	54S38	† Signetics	
	74S38	**Signetics (1156)**	
	SN54S38	**† TI (716)**	
	SN74S38	TI	
Quad 2-Input Buffer, Open Collector, to 15 V			
TTL-LS	**54LS26**	**† Fairchild (612)**	120
	74LS26	**Fairchild (5311)**	
	HD74LS26	Hitachi	
	SN54LS26	**† Motorola (1122)**	
	SN74LS26	**Motorola (1122)**	
	DM54LS26	† National	125
	DM74LS26	National	
	DN74LS26	Panasonic	
	T74LS26	SGS	
	54LS26	† Signetics	
	74LS26	**Signetics (1156)**	130
	SN54LS26	**† TI (715)**	
	SN74LS26	TI	
Quad 2-Input, Open Collector			
TTL	5401	† Fairchild	
	5403	† Fairchild	
	7401	Fairchild	135
	7403	Fairchild	
	MC7401	Motorola	
	MC7403	Motorola	
	DM5401	† National	
	DM5403	† National	140
	DM7401	National	
	DM7403	National	
	5403	† Signetics	
	7403	**Signetics (1156)**	
	N8881	**Signetics (1175)**	145
	SN5401	**† TI (712)**	
	SN5403	**† TI (712)**	
	SN7401	TI	
	SN7403	TI	
TTL-ALS	M74ALS01	Mitsubishi	150
	M74ALS03A	Mitsubishi	
	DM54ALS01	† National	
	DM54ALS03	† National	
	DM54ALS1003	† National	
	DM74ALS01	National	155
	DM74ALS03	National	
	DM74ALS1003	National	
	SN54ALS01	**† TI (712)**	
	SN54ALS03B	**† TI (712)**	
	SN74ALS01	TI	160
	SN74ALS03B	TI	
	SN74ALS1003A	TI	
TTL-H	54H01	† Fairchild	
	74H01	Fairchild	
	DM54H01	† National	165
	DM74H01	National	
	SN74H01	TI	
TTL-LS	**54LS03**	**† Fairchild (607,612,621,623)**	
	74LS03	**Fairchild (5311)**	
	GD74LS03	**† Goldstar (1066)**	170
	HD74LS01	Hitachi	
	HD74LS03	Hitachi	
	SN54LS01	**† Motorola (1122)**	
	SN54LS03	**† Motorola (1122)**	
	SN74LS01	**Motorola (1122)**	175
	SN74LS03	**Motorola (1122)**	
	DM54LS01	† National	
	DM54LS03	† National	
	DM74LS01	National	
	DM74LS03	† National	180
	DN74LS01	† Panasonic	
	DN74LS03	† Panasonic	
	54LS03	† SGS	
	74LS03	† SGS	
	54LS01	† Signetics	185
	54LS03	† Signetics	
	74LS01	**Signetics (1156)**	
	SN54LS01	**† TI (715)**	
	SN54LS03	**† TI (715)**	
	SN74LS01	TI	190
	SN74LS03	TI	
TTL-S	74S03	Fairchild	
	DM54S03	† National	
	DM74S03	National	
	54LS38	† SGS	195
	74LS38	SGS	
	54S03	Signetics	
	74S03	**Signetics (1156)**	
	SN54S03	**† TI (716)**	
	SN74S03	TI	200

† Military Temperature Range (−55° to 125°C)

* Typical Value

Bold face indicates additional data is provided on the page noted.

DIGITAL-TTL (Cont'd)

Gates, NAND (Cont'd)

Function	Device	Source	Line
8-Input			
TTL	**5430**	† **Fairchild** **(609,616,622,623)**	
	7430	Fairchild	
	MC7430	Motorola	
	DM5430	† National	
	DM7430	National	5
	5430	† Signetics	
	7430	**Signetics (1156)**	
	SN5430	† **TI (712)**	
	SN7430	TI	
TTL-ALS	M74ALS30	Mitsubishi	10
	DM54ALS30	† National	
	DM74ALS30	National	
	SN54ALS30A	† **TI (713)**	
	SN74ALS30A	TI	
TTL-AS	DM54AS30	† National	15
	DM74AS30	National	
	SN54AS30	† **TI (713)**	
	SN74AS30	TI	
TTL-F	**74F30**	**Signetics (1156)**	
TTL-H	54H30	† Fairchild	20
	74H30	Fairchild	
	DM54H30	† National	
	DM74H30	National	
	SN74H30	TI	
TTL-LS	**54LS30**	† **Fairchild** **(608,612,621,623)**	25
	74LS30	**Fairchild (5311)**	
	GD74LS30	**Goldstar (1066)**	
	HD74LS30	Hitachi	
	SN54LS30	† **Motorola (1122)**	
	SN74LS30	**Motorola (1122)**	30
	DM54LS30	† National	
	DM74LS30	National	
	DN74LS30	Panasonic	
	54LS30	† SGS	
	74LS30	SGS	35
	54LS30	† Signetics	
	74LS30	**Signetics (1156)**	
	SN54LS30	† **TI (715)**	
	SN74LS30	TI	
TTL-S	54S30	† Fairchild	40
	74S30	Fairchild	
	DM54S30	† National	
	DM74S30	National	
	SN54S30	† **TI (716)**	
	SN74S30	TI	45
12-Input, Three-State			
TTL-S	54S134	† Fairchild	
	74S134	Fairchild	
	DM54S134	† National	
	DM74S134	National	
	54S134	† Signetics	50
	74S134	**Signetics (1157)**	
	SN54S134	† **TI (716)**	
	SN74S134	TI	
13-Input			
TTL-ALS	DM54ALS133	† National	
	DM74ALS133	National	55
	SN54ALS133	† **TI (713)**	
	SN74ALS133	TI	
TTL-LS	**54LS133**	† **Fairchild (612)**	
	74LS133	**Fairchild (5311)**	
	SN54LS133	† **Motorola (1122)**	60
	SN74LS133	**Motorola (1122)**	
	54LS133	† SGS	
	74LS133	SGS	

(Continued)

Function	Device	Source	Line
13-Input (Cont'd)			
TTL-S	54S133	† Fairchild	
	74S133	Fairchild	65
	DM54S133	† National	
	DM74S133	National	
	54S133	† Signetics	
	74S133	**Signetics (1157)**	
	SN54S133	† **TI (716)**	70
	SN74S133	TI	

Gates, AND-OR

Function	Device	Source	Line
2-2-2-3-Input, Expandable			
TTL-H	54H52	† Fairchild	
	74H52	Fairchild	
	SN74H52	TI	

Gates, AND-OR-Invert

Function	Device	Source	Line
Dual 2-Wide 2-Input			
TTL	**5451**	† **Fairchild (616)**	75
	7451	Fairchild	
	MC7451	Motorola	
	DM5451	† National	
	DM7451	National	
	5451	† Signetics	80
	7451	**Signetics (1156)**	
	SN5451	† **TI (712)**	
	SN7451	TI	
TTL-F	**74F51**	**Signetics (1156)**	
TTL-H	54H51	† Fairchild	85
	74H51	Fairchild	
	DM54H51	† National	
	DM74H51	National	
	SN74H51	TI	
TTL-LS	**54LS51**	† **Fairchild** **(608,612,621,623)**	90
	74LS51	**Fairchild (5311)**	
	GD74LS51	**Goldstar (1066)**	
	HD74LS51	Hitachi	
	SN54LS51	† **Motorola (1123)**	
	SN74LS51	**Motorola (1123)**	95
	DM54LS51	† National	
	DM74LS51	National	
	DN74LS51	Panasonic	
	LS5451	† SGS	
	LS7451	SGS	100
	T74LS51	SGS	
	54LS51	† Signetics	
	74LS51	**Signetics (1156)**	
	SN54LS51	† **TI (715)**	
	SN74LS51	TI	105
TTL-S	54S51	† Fairchild	
	74S51	Fairchild	
	GD74S51	**Goldstar (1066)**	
	DM54S51	† National	
	DM74S51	National	110
	54S51	† Signetics	
	74S51	**Signetics (1156)**	
	SN54S51	† **TI (716)**	
	SN74S51	TI	
Dual 2-Wide 2-Input (one gate is expandable)			
TTL	5450	† Fairchild	115
	7450	Fairchild	
	MC7450	Motorola	
	DM5450	† National	
	DM7450	National	
	5450	† Signetics	120
	7450	**Signetics (1156)**	
	SN5450	† **TI (712)**	
	SN7450	TI	

(Continued)

Function	Device	Source	Line
Dual 2-Wide 2-Input (one gate is expandable) (Cont'd)			
TTL-H	54H50	† Fairchild	
	74H50	Fairchild	125
	DM54H50	† National	
	DM74H50	National	
	SN74H50	TI	
Dual 4-Input Expander (for 54/7423, 54/7450, 54/7453)			
TTL	5460	† Fairchild	
	7460	Fairchild	130
	MC7460	Motorola	
	5460	† Signetics	
	SN7460	TI	
Dual 4-Input Extender (for 9005, 9008)			
TTL	DM9006C	National	
2-Wide, 4-Input			
TTL-LS	**54LS55**	† **Fairchild (612)**	135
	74LS55	**Fairchild (5311)**	
	HD74LS55	Hitachi	
	SN54LS55	† **Motorola (1123)**	
	SN74LS55	**Motorola (1123)**	
	DM54LS55	† National	140
	DM74LS55	National	
	DN74LS55	Panasonic	
	54LS55	† SGS	
	74LS55	SGS	
	SN74LS55	TI	145
2-Wide, 4-Input, Expandable			
TTL-H	54H55	† Fairchild	
	74H55	Fairchild	
	SN74H55	TI	
2-2-2-3-Input			
TTL-H	54H54	† Fairchild	
	74H54	Fairchild	150
	SN74H54	TI	
2-2-2-3-Input, Expandable			
TTL-H	54H53	† Fairchild	
	74H53	Fairchild	
	SN74H53	TI	
4-Wide 2-Input			
TTL	5454	† Fairchild	155
	7454	Fairchild	
	MC7454	Motorola	
	DM5454	† National	
	DM7454	National	
	SN5454	† **TI (712)**	160
	SN7454	TI	
4-Wide 2-Input, Expandable			
TTL	5453	† Fairchild	
	7453	Fairchild	
	MC7453	Motorola	
	DM5453	† National	165
	DM7453	National	
	SN5453	† **TI (712)**	
	SN7453	TI	
4-Wide 2-2-3-3-Input			
TTL-LS	**54LS54**	† **Fairchild** **(608,612,621,623)**	
	74LS54	**Fairchild (5311)**	170
	HD74LS54	Hitachi	
	SN54LS54	† **Motorola (1123)**	
	SN74LS54	**Motorola (1123)**	
	DM54LS54	† National	
	DM74LS54	National	175
	DN74LS54	Panasonic	
	54LS54	† SGS	
	74LS54	SGS	
	54LS54	† Signetics	
	74LS54	**Signetics (1156)**	180
	SN54LS54	† **TI (715)**	
	SN74LS54	TI	

† Military Temperature Range (−55° to 125°C)

* Typical Value

Bold face indicates additional data is provided on the page noted.

DIGITAL-TTL (Cont'd)

Gates, AND-OR-Invert (Cont'd)

Function	Device	Source	Line
4-2-3-2-Input			
TTL-F	**54F64**	**† Fairchild (607,610,620,623,1021)**	
	74F64	**Fairchild (1021,5310)**	
	MC54F64	**† Motorola (1123)**	
	MC74F64	**Motorola (1123)**	
	54F64	† Signetics	5
	74F64	**Signetics (1156)**	
TTL-S	54S64	† Fairchild	
	74S64	† Fairchild	
	DM54S64	† National	
	DM74S64	National	10
	54S64	† Signetics	
	74S64	**† Signetics (1156)**	
	SN54S64	**TI (716)**	
	SN74S64	TI	
4-2-3-2-Input, Open Collector			
TTL-S	54S65	† Fairchild	15
	74S65	† Fairchild	
	DM54S65	† National	
	DM74S65	† National	
	54S65	† Signetics	
	SN54S65	**† TI (716)**	20
	SN74S65	TI	

Gates, OR

Function	Device	Source	Line
Quad 2-Input			
TTL	**5432**	**† Fairchild (616)**	
	7432	Fairchild	
	DM5432	† National	
	DM7432	National	25
	5432	† Signetics	
	7432	**Signetics (1156)**	
	SN5432	**† TI (712)**	
	SN7432	TI	
TTL-ALS	M74ALS32	Mitsubishi	30
	DM54ALS1032	† National	
	DM54ALS32	† National	
	DM74ALS1032	National	
	DM74ALS32	National	
	SN54ALS32	**† TI (713)**	35
	SN74ALS1032A	TI	
	SN74ALS32	TI	
TTL-AS	DM54AS1032	† National	
	DM54AS32	† National	
	DM74AS1032	National	40
	DM74AS32	National	
	SN54AS1032	**† TI (714)**	
	SN74AS1032A	TI	
	SN74AS32	TI	
TTL-F	**54F32**	**† Fairchild (607,610,620,623,1021)**	45
	74F32	**Fairchild (1021)**	
	MC54F32	**† Motorola (1122)**	
	MC74F32	**Motorola (1122)**	
	74F32	**Signetics (1156)**	
TTL-H	MC3003	Motorola	50
TTL-LS	**54LS32**	**† Fairchild (608,612,621,623)**	
	74LS32	**Fairchild (5311)**	
	GD74LS32	**Goldstar (1066)**	
	HD74LS32	Hitachi	
	SN54LS32	**† Motorola (1122)**	55
	SN74LS32	**Motorola (1122)**	
	DM54LS32	† National	
	DM74LS32	National	
	DN74LS32	Panasonic	
	54LS32	† SGS	60
	74LS32	SGS	

(Continued)

Function	Device	Source	Line
Quad 2-Input			
TTL-LS		(Cont'd)	
	54LS32	† Signetics	
	74LS32	**Signetics (1156)**	
	SN54LS32	**† TI (715)**	
	SN74LS32	TI	65
TTL-S	54S32	† Fairchild	
	74S32	Fairchild	
	GD74S32	**Goldstar (1066)**	
	DM54S32	† National	
	DM74S32	National	70
	54S32	† Signetics	
	74S32	**Signetics (1156)**	
	SN54S32	**† TI (716)**	
	SN74S32	TI	
Hex 2-Input Line Driver/Buffer			
TTL-ALS	DM54ALS832	† National	75
	DM74ALS832	National	
	SN54ALS832	**† TI (713)**	
	SN74ALS1832	TI	
	SN74ALS832	TI	

Gates, NOR

Function	Device	Source	Line
Dual 4-Input, with Strobe			
TTL	**5425**	**† Fairchild (616)**	80
	7425	Fairchild	
	MC7425	Motorola	
	DM5425	† National	
	DM7425	National	
	5425	† Signetics	85
	7425	**Signetics (1156)**	
	SN5425	**† TI (712)**	
	SN7425	TI	
Dual 4-Input, with Strobe, Expandable (see 54/7460 expander)			
TTL	5423	† Fairchild	
	7423	Fairchild	90
	MC7423	Motorola	
	SN5423	**† TI (712)**	
	SN7423	TI	
Dual 5-Input			
TTL-F	**74F260**	**Signetics (1158)**	
TTL-LS	**54LS260**	**† Fairchild (614)**	95
	74LS260	**Fairchild (5311)**	
	SN54LS260	**† Motorola (1122)**	
	SN74LS260	**Motorola (1122)**	
	DN74LS260	Panasonic	
	T54LS260	† SGS	100
	T74LS260	SGS	
	54LS260A	† Signetics	
	74LS260	**Signetics (1158)**	
TTL-S	54S260	† Fairchild	
	74S260	Fairchild	105
	DM74S260	National	
	54S260	† Signetics	
	74S260	**Signetics (1158)**	
	SN54S260	**† TI (716)**	
	SN74S260	TI	110
Triple 3-Input			
TTL	5427	† Fairchild	
	7427	Fairchild	
	MC7427	Motorola	
	DM5427	† National	
	DM7427	National	115
	5427	† Signetics	
	7427	**Signetics (1156)**	
	SN5427	† TI	
	SN7427	TI	
TTL-ALS	M74ALS27	Mitsubishi	120
	DM54ALS27	† National	
	DM74ALS27	National	

(Continued)

Function	Device	Source	Line
Triple 3-Input			
TTL-ALS		(Cont'd)	
	SN54ALS27	**† TI (713)**	
	SN74ALS27	TI	
TTL-AS	DM54AS27	† National	125
	DM74AS27	National	
	SN54AS27	**† TI (713)**	
	SN74AS27	TI	
TTL-LS	**54LS27**	**† Fairchild (608,612,621,623)**	
	74LS27	**Fairchild (5311)**	130
	GD74LS27	**Goldstar (1066)**	
	HD74LS27	Hitachi	
	SN54LS27	**† Motorola (1122)**	
	SN74LS27	**Motorola (1122)**	
	DM54LS27	† National	135
	DM74LS27	National	
	DN74LS27	Panasonic	
	54LS27	† SGS	
	74LS27	SGS	
	54LS27	† Signetics	140
	74LS27	**Signetics (1156)**	
	SN74LS27	TI	
Quad 2-Input			
TTL-H	MC3002	Motorola	
	MC3102	† Motorola	
Quad 2-Input Buffer, Open Collector			
TTL	5433	† Signetics	145
	7433	**Signetics (1156)**	
	SN5433	**† TI (712)**	
	SN7433	TI	
TTL-ALS	M74ALS33	Mitsubishi	
	DM54ALS33	† National	150
	DM74ALS33	National	
	SN54ALS33A	**† TI (713)**	
	SN74ALS33A	TI	
TTL-LS	**54LS33**	**† Fairchild (612)**	
	74LS33	**Fairchild (5311)**	155
	SN54LS33	**† Motorola (1122)**	
	SN74LS33	**Motorola (1122)**	
	DN74LS33	Panasonic	
	T54LS33	† SGS	
	T74LS33	SGS	160
	54LS33	† Signetics	
	74LS33	**Signetics (1156)**	
	SN54LS33	**† TI (715)**	
	SN74LS33	TI	
Quad 2-Input, Open Collector			
TTL-LS	**74LS266**	**Signetics (1158)**	165
Quad 2-Input (54/7428 devices are also buffers)			
TTL	**5402**	**† Fairchild (609,616,622,623)**	
	7402	Fairchild	
	MC7402	Motorola	
	DM5402	† National	
	DM7402	National	170
	5402	† Signetics	
	5428	† Signetics	
	7402	**Signetics (1156)**	
	7428	**Signetics (1156)**	
	SN5402	**† TI (712)**	175
	SN5428	**† TI (712)**	
	SN7402	TI	
	SN7428	TI	
TTL-ALS	M74ALS02	Mitsubishi	
	M74ALS28	Mitsubishi	180
	DM54ALS02	† National	
	DM54ALS1002	† National	
	DM54ALS28	† National	
	DM74ALS02	National	
	DM74ALS1002	National	185
	DM74ALS28	National	

(Continued)

† Military Temperature Range (−55° to 125°C)

* Typical Value

Bold face indicates additional data is provided on the page noted.

DIGITAL–TTL (Cont'd)

Gates, NOR (Cont'd)

Function	Device	Source	Line
Quad 2-Input (54/7428 devices are also buffers)			
TTL-ALS (Cont'd)			
	SN54ALS02	**† TI (712)**	
	SN54ALS28A	**† TI (713)**	
	SN74ALS02	TI	
	SN74ALS1002A	TI	
	SN74ALS28A	TI	5
TTL-AS	DM54AS02	† National	
	DM54AS1036	† National	
	DM74AS02	National	
	DM74AS1036	National	
	SN54AS02	**† TI (713)**	10
	SN74AS02	TI	
	SN74AS1036A	TI	
TTL-F	**54F02**	**† Fairchild (607,610,620,623,1021)**	
	74F02	**Fairchild (1021,5310)**	
	MC54F02	**† Motorola (1122)**	15
	MC74F02	**Motorola (1122)**	
	74F02	**Signetics (1156)**	
TTL-LS	**54LS02**	**† Fairchild (607,612,621,623)**	
	54LS28	**† Fairchild (612)**	
	74LS02	**Fairchild (5311)**	20
	74LS28	**Fairchild (5311)**	
	GD74LS02	**Goldstar (1066)**	
	HD74LS02	Hitachi	
	SN54LS02	**† Motorola (1122)**	
	SN54LS28	**† Motorola (1122)**	25
	SN74LS02	**Motorola (1122)**	
	SN74LS28	**Motorola (1122)**	
	DM54LS02	† National	
	DM74LS02	National	
	DN74LS02	Panasonic	30
	DN74LS28	Panasonic	
	54LS02	† SGS	
	74LS02	SGS	
	T54LS28	† SGS	
	T74LS28	SGS	35
	54LS02	† Signetics	
	54LS28	† Signetics	
	74LS02	**Signetics (1156)**	
	SN54LS02	**† TI (715)**	
	SN54LS28	**† TI (715)**	40
	SN74LS02	TI	
	SN74LS28	TI	
TTL-S	54S02	† Fairchild	
	74S02	Fairchild	
	DM54S02	† National	45
	DM74S02	National	
	54S02	† Signetics	
	74S02	**Signetics (1156)**	
	SN54S02	**† TI (716)**	
	SN74S02	TI	50

Gates, OR/NOR

Function	Device	Source	Line
Quad 2-Input Exclusive OR/NOR			
TTL-S	54S135	† Fairchild	
	74S135	Fairchild	
	DM54S135	† National	
	DM74S135	National	
	54S135	† Signetics	55
	74S135	**Signetics (1157)**	
	SN54S135	**† TI (716)**	
	SN74S135	TI	

Gates, Exclusive OR

Function	Device	Source	Line
Quad 2-Input			
TTL-H	MC3021	Motorola	
	MC3121	† Motorola	60
Quad 2-Input, Open Collector			
AS	SN54AS136	† TI	
	SN74AS136	TI	
TTL	MC74136	Motorola	
	S8241	Signetics	
	SN54136	**† TI (712)**	65
	SN74136	TI	
TTL-ALS	DM54ALS136	† National	
	DM74ALS136	National	
	SN74ALS136	TI	
TTL-LS	**54LS136**	**Fairchild (612)**	70
	74LS136	**Fairchild (5311)**	
	GD74LS136	**Goldstar (1066)**	
	HD74LS136	Hitachi	
	SN54LS136	**† Motorola (1123)**	
	SN74LS136	**Motorola (1123)**	75
	DM54LS136	† National	
	DM74LS136	National	
	DN74LS136	Panasonic	
	54LS136	† SGS	
	74LS136	SGS	80
	54LS136	† Signetics	
	74LS136	**Signetics (1157)**	
	SN54LS136	**† TI (715)**	
	SN74LS136	TI	
TTL-S	**N82S41**	**Signetics (1175)**	85
Quad 2-Input, Totem Pole Outputs			
AS	SN54AS86	† TI	
	SN74AS86	TI	
TTL	**5486**	**† Fairchild (609,616,622,623)**	
	7486	Fairchild	
	MC7241	Motorola	90
	MC7486	Motorola	
	MC8241	† Motorola	
	DM5486	National	
	DM7486	National	
	DM74LS386	National	95
	RC8241	Raytheon	
	RM8241	† Raytheon	
	5486	† Signetics	
	7486	**Signetics (1156)**	
	SN5486	**† TI (712)**	100
	SN7486	TI	
TTL-ALS	DM54ALS86	† National	
	DM74ALS86	National	
	SN54ALS86	**† TI (713)**	
	SN74ALS86	TI	105
TTL-AS	DM54AS86	† National	
	DM74AS86	National	
TTL-F	**54F86**	**† Fairchild (610,1021)**	
	74F86	**Fairchild (1021,5310)**	
	MC54F86	**† Motorola (1123)**	110
	MC74F86	**Motorola (1123)**	
	54F86	† Signetics	
	74F86	**Signetics (1156)**	
TTL-LS	54LS386	† Fairchild	
	54LS86	† Fairchild	115
	74LS386	**Fairchild (5311)**	
	74LS86	**Fairchild (5311)**	
	GD74LS86	**Goldstar (1066)**	
	HD74LS386	Hitachi	
	HD74LS86	Hitachi	120
	SN54LS386	**† Motorola (1123)**	

(Continued)

Function	Device	Source	Line
Quad 2-Input, Totem Pole Outputs			
TTL-LS (Cont'd)			
	SN54LS86	**† Motorola (1123)**	
	SN74LS386	**Motorola (1123)**	
	SN74LS86	**Motorola (1123)**	
	DM54LS386	† National	125
	DM54LS86	† National	
	DM74LS86	National	
	DN74LS386	Panasonic	
	DN74LS86	Panasonic	
	54LS86	† SGS	130
	74LS86	SGS	
	54LS86	† Signetics	
	74LS86	**Signetics (1156)**	
	SN54LS386A	**† TI (716)**	
	SN54LS86A	**† TI (715)**	135
	SN74LS386A	TI	
	SN74LS86A	TI	
TTL-S	54S86	† Fairchild	
	74S86	Fairchild	
	DM74S86	National	140
	54S86	† Signetics	
	74S86	**Signetics (1156)**	
	SN54S86	**† TI (716)**	
	SN74S86	TI	

Gates, Exclusive NOR

Function	Device	Source	Line
Quad 2-Input			
TTL-ALS	DM74AS810	National	145
TTL-AS	SN74AS810	TI	
Quad 2-Input, Open Collector			
TTL-ALS	DM74AS811	National	
TTL-AS	SN74AS811	TI	
Quad 2-Input			
TTL-ALS	DM54ALS810	† National	
	DM74ALS810	National	150
	SN74ALS810	TI	
TTL-H	MC3022	Motorola	
	MC3122	† Motorola	
Quad 2-Input, Open Collector			
TTL	9386C	Fairchild	
	9386M	† Fairchild	155
	MC7242	Motorola	
	MC8242	† Motorola	
	RC8242	Raytheon	
	RM8242	† Raytheon	
	N8242	**Signetics (1175)**	160
	N9386	**Signetics (1175)**	
	S9386	† Signetics	
TTL-ALS	DM54ALS811	† National	
	DM74ALS811	National	
	SN74ALS811	TI	165
TTL-LS	**54LS266**	**† Fairchild (608,614,622,623)**	
	74LS266	**Fairchild (5311)**	
	HD74LS266	Hitachi	
	SN54LS266	**† Motorola (1123)**	
	SN74LS266	**Motorola (1123)**	170
	DM54LS266	† National	
	DM74LS266	National	
	DN74LS266	Panasonic	
	54LS266	† SGS	
	74LS266	SGS	175
	54LS266	† Signetics	
	N8242	**Signetics (1175)**	
	S8242	† Signetics	
	SN54LS266	**† TI (715)**	
	SN74LS266	TI	180

† Military Temperature Range (– 55° to 125°C)

* Typical Value

Bold face indicates additional data is provided on the page noted.

DIGITAL–TTL (Cont'd)

Function	Device	Source	Line
Latches			
Octal Transparent, Inverting, Three-State			
TTL-S	AM2957C	AMD	
Octal Transparent, Non-Inverting, Three-State			
TTL-S	AM2956C	AMD	
	AM2956M	† AMD	
Dual 4-Bit			
TTL	MC74100	Motorola	
	SN54100	† **TI (712)**	5
	SN74100	TI	
TTL-ALS	M74ALS873	Mitsubishi	
	DM54ALS873	† National	
	DM74ALS873	National	
	SN54ALS873	† **TI (713)**	10
	SN74ALS873A	TI	
TTL-AS	DM54AS873	† National	
	DM74AS873	National	
	SN74AS873	TI	
Dual 4-Bit Addressable			
TTL-F	**54F256**	**Fairchild (1022)**	15
	74F256	**Fairchild (1022)**	
	74F256	**Signetics (1158)**	
TTL-LS	**54LS256**	† **Fairchild (613)**	
	74LS256	**Fairchild (5311)**	
	SN54LS256	† **Motorola (1126)**	20
	SN74LS256	**Motorola (1126)**	
	T54LS256	† SGS	
	T74LS256	SGS	
	74LS256	**Signetics (1158)**	
Dual 4-Bit with Clear			
TTL	**9308C**	**Fairchild (617)**	25
	9308M	† **Fairchild (617)**	
	MC8308	Motorola	
	54116	† Signetics	
	74116	**Signetics (1156)**	
	SN54116	† **TI (712)**	30
	SN74116	TI	
Quad Bistable, Complementary Outputs			
TTL	**5475**	† **Fairchild (616)**	
	7475	Fairchild	
	MC7475	Motorola	
	DM5475	† National	35
	DM7475	National	
	5475	† Signetics	
	7475	**Signetics (1156)**	
	SN5475	† **TI (712)**	
	SN7475	TI	40
TTL-LS	**54LS375**	† **Fairchild (614)**	
	74LS375	**Fairchild (5311)**	
	GD74LS75	**Goldstar (1066)**	
	HD74LS375	Hitachi	
	HD74LS75	Hitachi	45
	SN54LS375	† **Motorola (1126)**	
	SN54LS75	† **Motorola (1126)**	
	SN74LS375	**Motorola (1126)**	
	SN74LS75	**Motorola (1126)**	
	DM54LS75	† National	50
	DM74LS75	National	
	DN74LS75	Panasonic	
	54LS375	† Signetics	
	54LS75	† Signetics	
	74LS375	**Signetics (1158)**	55
	74LS75	**Signetics (1156)**	
	SN54LS375	† **TI (715)**	
	SN54LS75	† **TI (715)**	
	SN74LS375	TI	
	SN74LS75	TI	60
Quad Bistable, Single Output			
TTL	5477	† Fairchild	
	MC7477	Motorola	
		(Continued)	
Quad Bistable, Single Output		(Cont'd)	
TTL-LS	HD74LS77	Hitachi	
	SN54LS77	† **Motorola (1126)**	
	SN74LS77	**Motorola (1126)**	65
	DM54LS377	† National	
	DM74LS77	National	
Quad Multifunction			
TTL	**9314C**	**Fairchild (617)**	
	9314M	† **Fairchild (617)**	
	MC8314	Motorola	70
	MC9314	† Motorola	
	S9314	† Signetics	
Quad Set-Reset			
TTL	**54279**	† **Fairchild (617)**	
	74279	Fairchild	
	54279	† Signetics	75
	74279	**Signetics (1158)**	
	SN54279	† **TI (712)**	
	SN74279	TI	
TTL-LS	**54LS279**	† **Fairchild (608,614,622,623)**	
	74LS279	**Fairchild (5311)**	80
	HD74LS279	Hitachi	
	SN54LS279	† **Motorola (1126)**	
	SN74LS279	**Motorola (1126)**	
	DM54LS279	† National	
	DM74LS279	National	85
	DN74LS279	Panasonic	
	54LS279	† SGS	
	74LS279	SGS	
	54LS279	† Signetics	
	SN54LS279A	† **TI (715)**	90
	SN74LS279A	TI	
Octal Transparent, Inverting			
TTL-ALS	M74ALS880	Mitsubishi	
	DM54ALS880	† National	
	DM74ALS880	National	
	SN74ALS880	TI	95
TTL-AS	DM54AS880	† National	
	DM74AS880	National	
	SN74AS880	TI	
Octal 2-Input Multiplexed, Three-State Outputs			
TTL-F	**54F604**	† **Fairchild (1022)**	
	54F605	† Fairchild	100
	54F606	† Fairchild	
	54F607	† Fairchild	
	74F604	**Fairchild (1022)**	
	74F605	Fairchild	
	74F606	Fairchild	105
	74F607	Fairchild	
	54F604	† Signetics	
	54F605	† Signetics	
	74F604	Signetics	
	74F605	Signetics	110
TTL-LS	**SN54LS604**	† **Motorola (1129)**	
	SN54LS605	† **Motorola (1129)**	
	SN54LS606	† **Motorola (1129)**	
	SN54LS607	† **Motorola (1129)**	
	SN74LS604	**Motorola (1129)**	115
	SN74LS605	**Motorola (1129)**	
	SN74LS606	**Motorola (1129)**	
	SN74LS607	**Motorola (1129)**	
	SN74LS604	TI	
	SN74LS605	TI	120
	SN74LS606	TI	
	SN74LS607	TI	
6-Bit (independent 2 and 4-Bit)			
TTL-S	N8T3404	Signetics	
6-Bit, Transparent, D Type, Three-State			
TTL-S	SN74S268	TI	
8-Bit, Addressable, with Clear			
TTL	**9334C**	**Fairchild (617)**	125
	9334M	† **Fairchild (617)**	
	DM54259	† National	
	DM74259	National	
	DM8334	National	
	DM9334	† National	130
	N9334	**Signetics (1175)**	
	S9334	† Signetics	
	SN54259	† **TI (712)**	
	SN74259	TI	
TTL-F	**54F259**	**Fairchild (1022)**	135
	74F259	**Fairchild (1022)**	
	74F259	**Signetics (1158)**	
TTL-LS	**54LS259**	† **Fairchild (614)**	
	74LS259	**Fairchild (5311)**	
	GD74LS259	**Goldstar (1066)**	140
	HD74LS259	Hitachi	
	SN54LS259	† **Motorola (1126)**	
	SN74LS259	**Motorola (1126)**	
	DM54LS259	† National	
	DM74LS259	National	145
	54LS259	† SGS	
	74LS259	SGS	
	54LS259	† Signetics	
	74LS259	**Signetics (1158)**	
	SN74LS259B	TI	150
8-Bit, Edge-Triggered D-Type, Read-Back			
	SN54ALS996	† **TI (1300)**	
	SN74ALS996	**TI (1300)**	
8-Bit, Inverting, Back-to-Back Configuration			
TTL-LS	SN54LS567	† MMI	
	SN74LS567	**MMI (1107)**	
8-Bit, Multimode Buffered			
TTL-S	SN74S412	TI	155
8-Bit, Non-Inverting, Back-to-Back Configuration			
TTL-LS	SN54LS547	† MMI	
	SN74LS547	**MMI (1107)**	
8-Bit, Non-Inverting, Three-State, Readback			
TTL-LS	**SN54LS793**	† **MMI (1111)**	
	SN74LS793	**MMI (1107,1111)**	
8-Bit, Transparent, D Type, Three-State			
TTL-ALS	M74ALS573	Mitsubishi	160
	DM54ALS373	† National	
	DM54ALS573	† National	
	DM74ALS373	National	
	DM74ALS573	National	
	SN54ALS373	† TI	165
	SN54ALS573	† **TI (713)**	
	SN74ALS373	TI	
	SN74ALS573A	TI	
TTL-AS	DM54AS373	† National	
	DM54AS573	† National	170
	DM74AS373	National	
	DM74AS573	National	
	SN54AS373	† **TI (713)**	
	SN54AS573	† **TI (713)**	
	SN74AS373	TI	175
	SN74AS573	TI	
TTL-F	**54F373**	† **Fairchild (607,611,620,623,1022)**	
	54F412	† **Fairchild (611,1022)**	
	54F432	† **Fairchild (1022)**	
	54F573	† **Fairchild (1022)**	180
	74F373	**Fairchild (1022,5310)**	
	74F412	**Fairchild (1022,5310)**	
	74F432	**Fairchild (1022,5310)**	
		(Continued)	

† Military Temperature Range (−55° to 125°C)

* Typical Value

Bold face indicates additional data is provided on the page noted.

DIGITAL-TTL (Cont'd)

Latches (Cont'd)

Function	Device	Source	Line
8-Bit, Transparent, D Type, Three-State			
TTL-F		(Cont'd)	
	74F573	**Fairchild (1022,5310)**	
	MC54F373	† **Motorola (1126)**	
	MC74F373	**Motorola (1126)**	
	54F373	† Signetics	
	74F373	**Signetics (1158)**	5
	74F412	**Signetics (1158)**	
	74F432	**Signetics (1158)**	
	74F573	**Signetics (1159)**	
TTL-LS	54LS373	† Fairchild	
	74LS373	**Fairchild (5311)**	10
	74LS573	**Fairchild (5311)**	
	GD74LS373	**Goldstar (1066)**	
	GD74LS573	**Goldstar (1066)**	
	HD74LS373	Hitachi	
	SN54LS373	† MMI	15
	SN54LS373	† **Motorola (1126)**	
	SN74LS373	**Motorola (1126)**	
	DM54LS373	† National	
	DM74LS373	National	
	DN74LS373	Panasonic	20
	T74LS373	SGS	
	54LS363	† Signetics	
	54LS373	† Signetics	
	74LS363	**Signetics (1158)**	
	74LS373	**Signetics (1158)**	25
	N8TS805	Signetics	
	S8TS805	† Signetics	
	S8TS806	† Signetics	
	SN54LS373	† **TI (715)**	
	SN74LS373	TI	30
TTL-S	AM25S373	AMD	
	SN74S373	AMD	
	SN54S373	† MMI	
	DM54S373	† National	
	DM74S373	National	35
	54S373	Signetics	
	74S373	**Signetics (1158)**	
	SN54S373	† **TI (716)**	
	SN74S373	TI	
8-Bit, Transparent, D-Type, Inverting			
TTL-AS	SN74AS846	TI	40
TTL-F	**74F846**	**Signetics (1160)**	
8-Bit, Transparent, D-Type, Inverting Three-State			
TTL-ALS	M74ALS563	Mitsubishi	
	M74ALS580	Mitsubishi	
	DM54ALS533	† National	
	DM54ALS563	† National	45
	DM54ALS580	† National	
	DM74ALS533	National	
	DM74ALS563	National	
	DM74ALS580	National	
	SN54ALS533	† **TI (713)**	50
	SN54ALS563	† **TI (713)**	
	SN54ALS580	† **TI (713)**	
	SN74ALS533	TI	
	SN74ALS563	TI	
	SN74ALS580	TI	55
TTL-AS	DM54AS533	† National	
	DM54AS580	† National	
	DM74AS533	National	
	DM74AS580	National	
	SN74AS533	TI	60
	SN74AS580	TI	
		(Continued)	

Function	Device	Source	Line
8-Bit, Transparent, D-Type, Inverting Three-State (Cont'd)			
TTL-F	**54F533**	† **Fairchild (607,611,623,1022)**	
	74F533	**Fairchild (1022,5310)**	
	74F563	**Fairchild (1022,5310)**	
	MC54F533	† **Motorola (1126)**	65
	MC74F533	**Motorola (1126)**	
	54F533	† Signetics	
	74F533	**Signetics (1159)**	
	74F563	**Signetics (1159)**	
TTL-LS	AM25LS533	AMD	70
	54LS533	† Fairchild	
	74LS533	**Fairchild (5311)**	
	74LS563	**Fairchild (5311)**	
	74LS564	**Fairchild (5311)**	
	SN54LS533	† MMI	75
	N8TS807	Signetics	
TTL-S	AM25S533	AMD	
	SN74S533	AMD	
	SN54S533	† MMI	
	SN74S535	MMI	80
8-Bit, Transparent, D-Type, Non-inverting			
TTL-AS	SN74AS845	TI	
TTL-F	**54F845**	† **Fairchild (1022)**	
	74F845	**Fairchild (1022)**	
	74F845	**Signetics (1160)**	
8-Bit, Transparent D-Type, Three-State (bus interface)			
TTL	AM29845	AMD	85
	AM29846	AMD	
TTL-ALS	SN74ALS845	TI	
	SN74ALS846	TI	
TTL-AS	SN54AS29845	† TI	
	SN54AS29846	† TI	90
	SN74AS29845	TI	
	SN74AS29846	TI	
8-Bit, Two-Stage Pipeline Configuration			
TTL-LS	**SN54LS549**	† **MMI (1110)**	
	SN74LS549	**MMI (1107,1110)**	
9-Bit, Transparent, D-Type, Inverting			
TTL-AS	SN74AS844	TI	95
TTL-F	**74F844**	**Signetics (1160)**	
9-Bit, Transparent, D-Type, Inverting (bus interface)			
TTL-ALS	SN74ALS844	TI	
9-Bit, Transparent, D-Type, Non-inverting			
TTL-ALS	SN74ALS843	TI	
TTL-AS	SN74AS843	TI	
TTL-F	**54F843**	† **Fairchild (1022)**	100
	74F843	**Fairchild (1022)**	
	74F843	**Signetics (1160)**	
9-Bit, Transparent D-Type Read-Back, Inverting			
TTL-ALS	SN74ALS991	TI	
9-Bit, Transparent D-Type Read-Back, Non-Inverting			
TTL-ALS	SN74ALS990	TI	
9-Bit, Transparent D-Type Read-Back, Three-State, Inverting			
TTL-ALS	SN74ALS993	TI	105
9-Bit, Transparent D-Type Read-Back, Three-State, Non-Inverting			
TTL-ALS	SN74ALS992	TI	
9-Bit, Transparent D-Type, Three-State (bus interface)			
TTL	AM29843	AMD	
	AM29844	AMD	
TTL-AS	SN54AS29843	† TI	
	SN54AS29844	† TI	110
	SN74AS29843	TI	
	SN74AS29844	TI	

Function	Device	Source	Line
10-Bit Readback Latch, Inverting			
TTL-ALS	**SN74ALS995**	**TI (1299)**	
10-Bit Readback Latch, Non-Inverting			
TTL-ALS	**SN74ALS994**	**TI (1299)**	
10-Bit, Transparent, D-Type, Inverting			
TTL-ALS	SN74ALS842	TI	115
TTL-AS	SN74AS842	TI	
TTL-F	**74F842**	**Signetics (1160)**	
10-Bit, Transparent, D-Type, Non-inverting			
TTL-AS	**SN54AS841**	† **TI (713)**	
	SN74AS841	TI	
TTL-F	**54F841**	† **Fairchild (1022)**	120
	74F841	**Fairchild (1022)**	
	74F841	**Signetics (1160)**	
10-Bit, Transparent, D-Type, Non-Inverting (bus interface)			
TTL-ALS	SN74ALS841	TI	
10-Bit, Transparent D-Type, Three-State (bus interface)			
TTL	AM29841	AMD	
	AM29842	AMD	125
TTL-AS	SN54AS29841	† TI	
	SN54AS29842	† TI	
	SN74AS29841	TI	
	SN74AS29842	TI	

Memories

Function	Device	Source	Line
Cache Address Comparator, with 512x9 RAM			
TTL(N)	**TMS2150**	**TI (1323)**	130
Data Access Register			
TTL-F	**54F407**	† **Fairchild (1027)**	
	74F407	**Fairchild (1027,5310)**	
For additional information on these and larger TTL compatible memories, see the Master Selection Guide-Memory section			
Dual Rank 8-Bit Shift Register (8-Bit I/O buffer, "D" register, and serial "B" register)			
TTL-LS	DM74LS62	† National	
	DM86LS52	National	135
	DM86LS62	National	
Dual 16-Word x 4-Bit Register File			
TTL-AS	**SN74AS870**	**TI (1250)**	
	SN74AS871	**TI (1250)**	
Diagnostic Register, 8-Bit			
TTL-S	SN54S818	† MMI	
	SN74S818	MMI	140
Octal Storage Register (two stage, 4-Bit wide shift register)			
TTL-LS	**SN54LS396**	† **TI (716)**	
	SN74LS396	TI	
8-Bit Feedback Register, Inverting			
TTL-ALS	SN74ALS667	TI	
8-Bit Feedback Register, Non-Inverting			
TTL-ALS	SN74ALS666	TI	
8-Bit Multiport Register (RAM with simultaneous read/write)			
TTL	**9338C**	**Fairchild (617)**	145
	9338M	† **Fairchild (617)**	
16-Bit Active Element Memory			
TTL	93407C	Fairchild	
	93407M	† Fairchild	
	MC4004	Motorola	
	MC4005	Motorola	150
	MC4304	† Motorola	
	MC4305	† Motorola	
16-Bit (4x4) Register File, Simultaneous Read/Write, Open Collector			
TTL	**54170**	† **Fairchild (617)**	
	74170	Fairchild	
	DM74170	National	155
		(Continued)	

† Military Temperature Range (−55° to 125°C)

* Typical Value

Bold face indicates additional data is provided on the page noted.

DIGITAL-TTL (Cont'd)

Function	Device	Source	Line
Memories (Cont'd)			
16-Bit (4x4) Register File, Simultaneous Read/Write, Open Collector			
TTL		(Cont'd)	
	54170	† Signetics	
	74170	**Signetics (1157)**	
	SN74170	TI	
TTL-LS	**54LS170**	**† Fairchild (613)**	
	74LS170	**Fairchild (5311)**	5
	HD74LS170	Hitachi	
	SN54LS170	**† Motorola (1128)**	
	SN54SL170	† Motorola	
	SN74LS170	**Motorola (1128)**	
	DM54LS170	† National	10
	DM74LS170	National	
	DN74LS170	Panasonic	
	54LS170	† SGS	
	74LS170	SGS	
	74LS170	**Signetics (1157)**	15
	SN74LS170	TI	
16-Bit (4x4) Register File, Simultaneous Read/Write, Three-State			
TTL-LS	**54LS670**	**† Fairchild (614)**	
	74LS670	**Fairchild (5311)**	
	GD74LS670	**Goldstar (1066)**	
	HD74LS670	Hitachi	20
	SN54LS670	**† Motorola (1128)**	
	SN74LS670	**Motorola (1128)**	
	DM54LS670	† National	
	DM74LS670	National	
	54LS670	† SGS	25
	74LS670	SGS	
	54LS670	† Signetics	
	74LS670	Signetics	
	SN74LS670	TI	
16-Bit (8x2) Multiport Register File, Simultaneous Read/Write, Three-State			
TTL	SN74172	TI	30
TTL-S	54S172	† Signetics	
	74S172	**Signetics (1157)**	
32-Bit (4x8) Register File, Open Collector			
TTL-F	54F571	† Fairchild	
	74F571	Fairchild	
32-Bit (4x8) Register File, Three-State			
TTL-F	54F570	† Fairchild	35
	74F570	Fairchild	
64-Bit (16x4) First-In/First-Out Memory			
TTL-ALS	**SN74ALS232**	**TI (1211)**	
64-Bit (16x4) RAM, Open Collector			
	54F289	† Fairchild	
	54F319	† Fairchild	
	74F289	Fairchild	40
	74F319	Fairchild	
	MC54F289	† Motorola	
	MC74F289	Motorola	
TTL	DM7489B	National	
	DM7589	National	45
	DM8589	National	
	SN7489	TI	
TTL-S	DM74S289	National	
64-Bit (16x4) RAM, Two Port, Open Collector			
TTL	AM29704C	AMD	
	AM29704M	† AMD	50
TTL-S	IDM29704C	National	
	IDM29704M	† National	

Function	Device	Source	Line
64-Bit (16x4) RAM, Three-State			
TTL	DM8599	National	
TTL-F	**54F189**	**† Fairchild (610,1027)**	
	54F219	**† Fairchild (610,1027)**	55
	74F189	**Fairchild (1027,5310)**	
	74F219	**Fairchild (1027,5310)**	
	MC54F189	† Motorola	
	MC74F189	Motorola	
TTL-S	DM74S189	National	60
64-Bit (16x4) RAM, Two Port, Three-State			
TTL	AM29705C	AMD	
	AM29705M	† AMD	
TTL-S	IDM29705AC	National	
	IDM29705AM	† National	
	IDM29705C	National	65
	IDM29705M	† National	
64-Bit (16x4) Register File with Latch, Three-State			
TTL-S	DM85S68	National	
64-Bit (16x4) Simultaneous Read/Write RAM with Output Register			
TTL	**54F410**	**† Fairchild (1022,1027)**	
	74F410	**Fairchild (1022,1027,5310)**	
64-Bit (32x2) Simultaneous Read/Write RAM			
TTL-S	N82S21	Signetics	70
80-Bit (16x5) First-In/First-Out Memory			
TTL-ALS	**SN74ALS233**	**TI (1215)**	
80-Bit (16x5) First-In/First-Out Memory, Asynchronous, Three-State			
TTL-S	**74S225**	**Signetics (1157)**	
	SN74S225	TI	
144-Bit (16x9) RAM, Open Collector			
	54F311	† Fairchild	
	54F312	† Fairchild	75
	74F311	Fairchild	
	74F312	Fairchild	
144-Bit (16x9) RAM, Three-State			
	54F211	**† Fairchild (1027)**	
	54F212	**† Fairchild (1027)**	
	74F211	**Fairchild (1027)**	80
	74F212	**Fairchild (1027)**	
192-Bit (16x12) RAM, Open Collector			
TTL-F	54F313	† Fairchild	
	74F313	Fairchild	
192-Bit (16x12) RAM, Three-State			
	54F213	**† Fairchild (1027)**	
	74F213	**Fairchild (1027)**	85
256-Bit (64x5) First-In/First-Out Memory			
TTL-ALS	SN74ALS234	TI	
320-Bit (64x5) First-In/First-Out Memory			
TTL-ALS	SN74ALS235	TI	
1024x10 ROM, Sine (0° to 90°) Look-Up Table			
TTL-S	**5086**	**† MMI (1103)**	
	5087	**† MMI (1103)**	
	6086	**MMI (1103)**	90
	6087	**MMI (1103)**	
Multiplexers (Digital)			
Synchronous Address			
TTL-LS	MC6883	Motorola	
	SN74LS783	**Motorola (1129)**	
Dual 4-Input, Inverting, Three-State			
TTL-ALS	DM54ALS353	† National	
	DM74ALS353	National	95
	SN54ALS353	**† TI (713)**	
		(Continued)	

Function	Device	Source	Line
Dual 4-Input, Inverting, Three-State			
TTL-ALS		(Cont'd)	
	SN74ALS353	TI	
	SN74AS353	TI	
TTL-F	**54F353**	**† Fairchild (607,611,620,623,1025)**	
	74F353	**Fairchild (1025,5310)**	100
	MC54F353	**† Motorola (1129)**	
	MC74F353	**Motorola (1129)**	
	74F353	**Signetics (1158)**	
TTL-LS	**54LS353**	**† Fairchild (614)**	
	74LS353	**Fairchild (5311)**	105
	SN54LS353	**† Motorola (1129)**	
	SN74LS353	**Motorola (1129)**	
	DM54LS353	† National	
	DM74LS353	National	
	T54LS353	† SGS	110
	T74LS353	SGS	
	54LS353	† Signetics	
	74LS353	**Signetics (1158)**	
	SN54LS353	**† TI (715)**	
	SN74LS353	TI	115
Dual 4-Input			
TTL	**54153**	**† Fairchild (609,616,622,623)**	
	74153	Fairchild	
	MC4000	Motorola	
	MC4300	† Motorola	
	MC74153	Motorola	120
	DM54153	† National	
	DM74153	National	
	54153	† Signetics	
	74153	**Signetics (1157)**	
	SN54153	**† TI (712)**	125
	SN74153	TI	
TTL-ALS	SN74ALS153	Motorola	
	DM54ALS153	† National	
	DM74ALS153	National	
	SN54ALS153	**† TI (713)**	130
	SN74ALS153	TI	
TTL-AS	SN74AS153	TI	
TTL-F	**54F153**	**† Fairchild (607,611,620,623,1025)**	
	74F153	**Fairchild (1025,5310)**	
	MC54F153	**† Motorola (1129)**	135
	MC74F153	**Motorola (1129)**	
	74F153	**Signetics (1157)**	
TTL-LS	**54LS153**	**† Fairchild (608,613,621,623)**	
	74LS153	**Fairchild (5311)**	
	GD74LS153	**Goldstar (1066)**	140
	HD74LS153	Hitachi	
	SN54LS153	**† Motorola (1129)**	
	SN74LS153	**Motorola (1129)**	
	DM54LS153	† National	
	DM74LS153	National	145
	DN74LS153	Panasonic	
	54LS153	† SGS	
	74LS153	SGS	
	54LS153	† Signetics	
	74LS153	**Signetics (1157)**	150
	SN54LS153	**† TI (715)**	
	SN74LS153	TI	
TTL-S	54S153	† Fairchild	
	74S153	Fairchild	
	DM54S153	† National	155
	DM74S153	National	
	54S153	† Signetics	
	74S153	**Signetics (1157)**	
		(Continued)	

† Military Temperature Range (−55° to 125°C)

* Typical Value

Bold face indicates additional data is provided on the page noted.

DIGITAL–TTL (Cont'd)

Multiplexers (Digital) (Cont'd)

Function	Device	Source	Line
Dual 4-Input			
TTL-S		(Cont'd)	
	SN54S153	† **TI (716)**	
	SN74S153	TI	
Dual 4-Input, Complementary Output			
TTL	**9309C**	**Fairchild** **(609,617,622,623)**	
	9309M	† **Fairchild** **(609,617,622,623)**	
	MC8309	Motorola	5
	MC9309	† Motorola	
	DM8309	National	
	DM9309	National	
	N9309	**Signetics (1175)**	
	S9309	† Signetics	10
Dual 4-Input, Inverting			
TTL-ALS	DM54ALS352	† National	
	DM74ALS352	National	
	SN54ALS352	† **TI (713)**	
	SN74ALS352	TI	
TTL-AS	SN74AS352	TI	15
TTL-F	**54F352**	† **Fairchild** **(607,611,620,623,1025)**	
	74F352	**Fairchild** **(1025,3510)**	
	MC54F352	† **Motorola (1129)**	
	MC74F352	**Motorola (1129)**	
	74F352	**Signetics (1158)**	20
TTL-LS	**54LS352**	† **Fairchild (614)**	
	74LS352	**Fairchild (5311)**	
	SN54LS352	† **Motorola (1129)**	
	SN74LS352	**Motorola (1129)**	
	DM54LS352	† National	25
	DM74LS352	National	
	T54LS352	† SGS	
	T74LS352	SGS	
	54LS352	† Signetics	
	74LS352	**Signetics (1158)**	30
	SN54LS352	† **TI (715)**	
	SN74LS352	TI	
Dual 4-Input (three-state 54/75153)			
TTL	DM7214	† National	
	DM8214	National	
Dual 4-Input, Three-State			
TTL-ALS	DM74ALS253	National	35
	SN54ALS253	† **TI (713)**	
	SN74ALS253	TI	
TTL-AS	SN74AS253	TI	
TTL-F	**54F253**	† **Fairchild** **(607,611,620,623,1025)**	
	74F253	**Fairchild** **(1025,5310)**	40
	MC54F253	† **Motorola (1129)**	
	MC74F253	**Motorola (1129)**	
	74F253	**Signetics (1158)**	
TTL-LS	**54LS253**	† **Fairchild** **(608,613,621,623)**	
	74LS253	**Fairchild (5311)**	45
	GD74LS253	**Goldstar (1066)**	
	HD74LS253	Hitachi	
	SN54LS253	† **Motorola (1129)**	
	SN74LS253	**Motorola (1129)**	
	DM54LS253	† National	50
	DM74LS253	National	
	DN74LS253	Panasonic	
	54LS253	† SGS	
	74LS253	SGS	
	54LS253	† Signetics	55
	74LS253	**Signetics (1158)**	
		(Continued)	
Dual 4-Input, Three-State			
TTL-LS		(Cont'd)	
	SN54LS253	† TI	
	SN74LS253	TI	
TTL-S	SN74S253	AMD	
	54S253	† Fairchild	60
	74S253	Fairchild	
	DM54S253	† National	
	DM74S253	National	
	54S253	† Signetics	
	74S253	**Signetics (1158)**	65
	SN74S253	TI	
Dual 8-Input (two 8-to-1 sections)			
TTL	**SN54LS451**	† **MMI (1100)**	
	SN74LS451	**MMI (1100)**	
	DM54LS451	† National	
	DM74LS451	National	70
	SN74351	TI	
Quad 2-Input Digital (suitable for driving adders, registers)			
TTL	MC7266	Motorola	
	MC8266	† Motorola	
	RC8266	Raytheon	
	RM8266	† Raytheon	75
	N8266	**Signetics (1175)**	
	S8266	† Signetics	
Quad 2-Input, Inverting			
TTL	54158	† Signetics	
	74158	**Signetics (1157)**	
TTL-ALS	**SN54ALS158**	† **TI (713)**	80
	SN74ALS158	TI	
TTL-AS	DM54AS158	† National	
	DM74AS158	National	
	SN54AS158	† **TI (713)**	
	SN74AS158	TI	85
TTL-F	**54F158**	† **Fairchild** **(610,1025)**	
	74F158	**Fairchild** **(1025,5310)**	
	MC54F158	† **Motorola (1129)**	
	MC74F158	**Motorola (1129)**	
	54F158	† Signetics	90
	74F158	**Signetics (1157)**	
TTL-LS	**54LS158**	† **Fairchild** **(608,613,621,623)**	
	74LS158	**Fairchild (5311)**	
	GD74LS158	**Goldstar (1066)**	
	HD74LS158	Hitachi	95
	SN54LS158	† **Motorola (1129)**	
	SN74LS158	**Motorola (1129)**	
	DM54LS158	† National	
	DM74LS158	National	
	DN74LS158	Panasonic	100
	54LS158	† SGS	
	74LS158	SGS	
	54LS158	† Signetics	
	74LS158	**Signetics (1157)**	
	SN54LS158	† **TI (715)**	105
	SN74LS158	TI	
TTL-S	54S158	† Fairchild	
	74S158	Fairchild	
	DM54S158	† National	
	DM74S158	National	110
	54S158	† Signetics	
	74S158	**Signetics (1157)**	
	SN54S158	† **TI (716)**	
	SN74S158	TI	
Quad 2-Input, Inverting, Open Collector			
TTL	RC8234	Raytheon	115
	RM8234	† Raytheon	
	N8234	**Signetics (1175)**	
	S8234	† Signetics	
Quad 2-Input, Inverting Three-State			
TTL-ALS	DM54ALS258	† National	
	DM74ALS258	National	120
	SN54ALS258	† **TI (713)**	
	SN74ALS258A	TI	
TTL-AS	DM54AS258	† National	
	DM74AS258	National	
	SN74AS258	TI	125
TTL-F	**54F258**	† **Fairchild** **(611,1025)**	
	74F258	**Fairchild** **(1025,5310)**	
	MC54F258	† **Motorola (1129)**	
	MC74F258	**Motorola (1129)**	
	54F258	† Signetics	130
	74F258	**Signetics (1158)**	
TTL-LS	**54LS258A**	† **Fairchild** **(608,614,622,623)**	
	74LS258	**Fairchild (5311)**	
	GD74LS258	**Goldstar (1066)**	
	HD74LS258	Hitachi	135
	SN54LS258A	† **Motorola (1129)**	
	SN74LS258A	**Motorola (1129)**	
	DM54LS258B	† National	
	DM74LS258B	National	
	DN74LS258A	Panasonic	140
	54LS258	† SGS	
	74LS258	SGS	
	54LS256	† Signetics	
	54LS258A	† Signetics	
	74LS258A	**Signetics (1158)**	145
	SN54LS258B	† TI	
	SN74LS258B	TI	
TTL-S	SN74S258	AMD	
	54S258	† Fairchild	
	74S258	Fairchild	150
	DM54S258	† National	
	DM74S258	National	
	54S258	† Signetics	
	74S258	**Signetics (1158)**	
	SN54S258	† **TI (716)**	155
	SN74S258	TI	
Quad 2-Input, Non-Inverting			
TTL	**54157**	† **Fairchild** **(609,616)**	
	74157	Fairchild	
	9322C	**Fairchild** **(609,617,622,623)**	
	9322M	† **Fairchild** **(609,617,622,623)**	160
	MC74157	Motorola	
	MC8322	Motorola	
	MC9322	† Motorola	
	DM54157	† National	
	DM74157	National	165
	DM8322	National	
	DM9322	† National	
	RC8233	Raytheon	
	RM8233	† Raytheon	
	54157	† Signetics	170
	74157	**Signetics (1157)**	
	N9322	**Signetics (1175)**	
	S8233	† Signetics	
	SN54157	† **TI (712)**	
	SN74157	TI	175
TTL-ALS	**SN54ALS157**	† **TI (713)**	
	SN74ALS157	TI	
TTL-AS	**SN54AS157**	† **TI (713)**	
	SN74AS157	TI	
		(Continued)	

† Military Temperature Range (−55° to 125°C)

* Typical Value

Bold face indicates additional data is provided on the page noted.

DIGITAL–TTL (Cont'd)

Function	Device	Source	Line
Multiplexers (Digital) (Cont'd)			
Quad 2-Input, Non-Inverting (Cont'd)			
TTL-F	**54F157**	**† Fairchild (610,1025)**	
	74F157	**Fairchild (1025,5310)**	
	MC54F157	**† Motorola (1129)**	
	MC74F157	**Motorola (1129)**	
	54F157	† Signetics	5
	74F157	**Signetics (1157)**	
TTL-LS	**54LS157**	**† Fairchild (608,613,621,623)**	
	74LS157	**Fairchild (5311)**	
	GD74LS157	**Goldstar (1066)**	
	HD74LS157	Hitachi	10
	SN54LS157	**† Motorola (1129)**	
	SN74LS157	**Motorola (1129)**	
	DM54LS157	† National	
	DM74LS157	National	
	DN74LS157	Panasonic	15
	54LS157	† SGS	
	74LS157	SGS	
	54LS157	Signetics	
	74LS157	**Signetics (1157)**	
	SN54LS157	**† TI (715)**	20
	SN74LS157	TI	
TTL-S	SN74S157	AMD	
	54S157	† Fairchild	
	74S157	Fairchild	
	GD74S157	**Goldstar (1066)**	25
	DM54S157	† National	
	DM74S157	National	
	54S157	† Signetics	
	74S157	**Signetics (1157)**	
	SN54S157	**† TI (716)**	30
	SN74S157	TI	
Quad 2-Input, Non-Inverting, Three-State			
TTL-ALS	DM54ALS257	† National	
	DM54AS257	† National	
	DM74ALS257	National	
	DM74AS257	National	35
	SN54ALS257	**† TI (713)**	
	SN74ALS257A	TI	
TTL-AS	**SN54AS257**	**† TI (713)**	
	SN74AS257	TI	
TTL-F	**54F257**	**† Fairchild (610,1025)**	40
	74F257	**Fairchild (1025,5310)**	
	MC54F257	**† Motorola (1129)**	
	MC74F257	**Motorola (1129)**	
	54F257	† Signetics	
	74F257	**Signetics (1158)**	45
TTL-LS	**54LS257A**	**† Fairchild (608,614,621,623)**	
	74LS257	**Fairchild (5311)**	
	GD74LS257A	**Goldstar (1066)**	
	HD74LS257	Hitachi	
	SN54LS257A	**† Motorola (1129)**	50
	SN74LS257A	**Motorola (1129)**	
	DM54LS257B	† National	
	DM74LS257B	National	
	DN74LS257A	Panasonic	
	54LS257	† SGS	55
	74LS257	SGS	
	54LS257A	† Signetics	
	74LS257A	**Signetics (1158)**	
	SN54LS257B	† TI	
	SN74LS257B	TI	60
		(Continued)	
Quad 2-Input, Non-Inverting, Three-State (Cont'd)			
TTL-S	SN74S257	AMD	
	74S257	Fairchild	
	DM54S257	† National	
	DM74S257	National	
	54S257	† Signetics	65
	74S257	**Signetics (1158)**	
	SN54S257	**† TI (716)**	
	SN74S257	TI	
Quad 2-Input, Open Collector (for adder, register input)			
TTL	MC7267	Motorola	
	MC8267	† Motorola	70
	RC8267	Raytheon	
	RM8267	† Raytheon	
Quad 2-Input, (three-state 54/74157)			
TTL	DM7123	National	
	DM8123	† National	
Quad 2-Input with Output Register			
TTL	**54298**	**† Fairchild (617)**	75
	74298	Fairchild	
	MC74298	Motorola	
	54298	† Signetics	
	74298	**Signetics (1158)**	
	SN54298	**† TI (712)**	80
	SN74298	TI	
TTL-AS	SN74AS298	TI	
TTL-F	**54F298**	**† Fairchild (1025)**	
	54F398	**† Fairchild (611,620,623,1022,1025)**	
	54F399	**† Fairchild (611,620,623,1022,1025)**	
	74F298	**Fairchild (1025)**	
	74F398	**Fairchild (1025,5310)**	
	74F399	**Fairchild (1022,1025,5310)**	
	74F298	**Signetics (1158)**	
	74F398	**Signetics (1158)**	90
	74F399	**Signetics (1158)**	
TTL-LS	AM25LS09C	AMD	
	AM25LS09M	† AMD	
	AM25LS399C	AMD	
	AM25LS399M	† AMD	95
	SN54LS399	† AMD	
	SN74LS399	AMD	
	54LS298	**† Fairchild (614)**	
	54LS398	† Fairchild	
	54LS399	† Fairchild	100
	74LS298	**Fairchild (5311)**	
	74LS398	Fairchild	
	74LS399	Fairchild	
	HD74LS298	Hitachi	
	SN54LS298	**† Motorola (1129)**	105
	SN54LS398	**† Motorola (1129)**	
	SN54LS399	**† Motorola (1129)**	
	SN74LS298	**Motorola (1129)**	
	SN74LS398	**Motorola (1129)**	
	SN74LS399	**Motorola (1129)**	110
	DM54LS298	† National	
	DM74LS298	National	
	54LS298	† SGS	
	74LS298	SGS	
	54LS298	† Signetics	115
	74LS298	**Signetics (1158)**	
	SN54LS298	**† TI (715)**	
	SN54LS398	**† TI (716)**	
	SN54LS399	**† TI (716)**	
	SN74LS298	TI	120
	SN74LS398	TI	
	SN74LS399	TI	
		(Continued)	
Quad 2-Input with Output Register (Cont'd)			
TTL-S	AM25S09C	AMD	
	AM25S09M	† AMD	
	SN54S399	† AMD	125
	SN74S399	AMD	
Quad 3-Input, Conditional Complementing			
TTL	RC8263	Raytheon	
	RM8263	† Raytheon	
Quad 3-Input, Open Collector, Conditional Complementing, Output Enable			
TTL	RC8264	Raytheon	
	RM8264	† Raytheon	130
Quad 4-Input			
TTL-LS	**SN54LS453**	**† MMI (1100)**	
	SN74LS453	**MMI (1100)**	
	DM54LS453	† National	
	DM74LS453	National	
Hex 2-Input, Three-State			
TTL-ALS	SN74ALS857	TI	135
TTL-AS	SN74AS857	TI	
8-Input, Complementary Output			
TTL	**9312C**	**Fairchild (617)**	
	9312M	**† Fairchild (617)**	
	MC8312	Motorola	
	MC9312	† Motorola	140
	DM8312	National	
	DM9312	† National	
	RC8230	Raytheon	
	RC8232	Raytheon	
	RM8232	† Raytheon	145
TTL-S	S82S30	† Signetics	
	S82S31	† Signetics	
	S82S32	† Signetics	
8-Input, Complementary Output, Open Collector			
TTL	9313C	Fairchild	
	9313M	† Fairchild	150
	RC8231	Raytheon	
	RM8231	† Raytheon	
8-Input, Complementary Output, Strobe			
TTL	**54151**	**† Fairchild (609,616,622,623)**	
	74151	Fairchild	
	MC74151	Motorola	155
	DM54151A	† National	
	DM74151A	National	
	54151	† Signetics	
	74151	**Signetics (1157)**	
	SN54151A	**† TI (712)**	160
	SN74151A	TI	
TTL-ALS	DM54ALS151	† National	
	DM74ALS151	National	
	SN54ALS151	**† TI (713)**	
	SN74ALS151	TI	165
TTL-AS	SN74AS151	TI	
TTL-F	**54F151**	**† Fairchild (610,1025)**	
	74F151	**Fairchild (1025,5310)**	
	MC54F151	**† Motorola (1129)**	
	MC74F151	**Motorola (1129)**	170
	74F151	**Signetics (1157)**	
TTL-LS	**54LS151**	**† Fairchild (608,613,621,623)**	
	74LS151	**Fairchild (5311)**	
	GD74LS151	**Goldstar (1066)**	
	HD74LS151A	Hitachi	175
	SN54LS151	**† Motorola (1129)**	
	SN74LS151	**Motorola (1129)**	
	DM54LS151	† National	
	DM74LS151	National	
	DN74LS151	Panasonic	180
		(Continued)	

† Military Temperature Range (−55° to 125°C)

* Typical Value

Bold face indicates additional data is provided on the page noted.

DIGITAL-TTL (Cont'd)

Multiplexers (Digital) (Cont'd)

Function	Device	Source	Line
8-Input, Complementary Output, Strobe			
TTL-LS		(Cont'd)	
	54LS151	† SGS	
	74LS151	SGS	
	54LS151	† Signetics	
	74LS151	**Signetics (1157)**	
	SN54LS151	† **TI (715)**	5
	SN74LS151	TI	
TTL-S	54S151	† Fairchild	
	74S151	Fairchild	
	93S12C	Fairchild	
	93S12M	† Fairchild	10
	DM54S151	† National	
	DM74S151	National	
	54S151	† Signetics	
	74S151	**Signetics (1157)**	
	SN54S151	† **TI (716)**	15
	SN74S151	TI	
8-Input, Complementary Output (three-state 54/74151)			
TTL	DM8121	National	
8-Input, Inverted Output			
TTL	54152	† Fairchild	
	MC74152	Motorola	
TTL-LS	**54LS152**	† **Fairchild (613)**	20
	HD74LS152	Hitachi	
	SN54LS152	† Motorola	
	T74LS152	SGS	
	SN74LS152	TI	
8-Input, Inverting/Non Inverting, Control Storage			
TTL-LS	AM25LS2535C	AMD	25
	AM25LS2535M	† AMD	
	AM25LS2922C	AMD	
	AM25LS2922M	† AMD	
	AM2922C	AMD	
	AM2922M	† AMD	30
8-Input Multiplexer/Data Selector/Register, Complementary Output, Open Collector			
TTL-LS	SN74LS355	TI	
	SN74LS357	TI	
8-Input Multiplexer/Data Selector/Register, Complementary Output, Three-State			
TTL-LS	**SN54LS356**	† **TI (715)**	
	SN74LS354	TI	
	SN74LS356	TI	35
8-Input, Strobe, Complementary Output, Three-State			
TTL	DM74251	National	
	SN54251	† **TI (712)**	
	SN74251	TI	
TTL-ALS	DM54ALS251	† National	
	DM74ALS251	National	40
	SN54ALS251	† **TI (713)**	
	SN74ALS251	TI	
TTL-AS	SN74AS251	TI	
TTL-F	**54F251A**	† **Fairchild (610,1025)**	
	74F251	**Fairchild (1025,5310)**	45
	MC54F251	† **Motorola (1129)**	
	MC74F251	**Motorola (1129)**	
	74F251	**Signetics (1158)**	
TTL-LS	**54LS251**	† **Fairchild (613)**	
	74LS251	**Fairchild (5311)**	50
	GD74LS251	**Goldstar (1066)**	
	HD74LS251	Hitachi	
	SN54LS251	† **Motorola (1129)**	
	SN74LS251	**Motorola (1129)**	
	DM54LS251	† National	55
	DM74LS251	National	
	DN74LS251	Panasonic	
		(Continued)	

Function	Device	Source	Line
8-Input, Strobe, Complementary Output, Three-State			
TTL-LS		(Cont'd)	
	54LS251	† SGS	
	74LS251	SGS	
	74LS251	**Signetics (1158)**	60
	SN74LS251	TI	
TTL-S	SN74S251	AMD	
	GD74S251	**Goldstar (1066)**	
	DM54S251	† National	
	DM74S251	National	65
	54LS251	† Signetics	
	54S251	† Signetics	
	74S251	**Signetics (1158)**	
	SN54S251	† **TI (716)**	
	SN74S251	TI	70
8-Input, Switches 1 of 8 Inputs to 2 complementary outputs			
TTL-AS	AM2923C	AMD	
	AM2923M	† AMD	
16-Input, Complementary Output, Three-State			
TTL-AS	SN74AS850	TI	
	SN74AS851	TI	
16-Input, Inverted Output, Strobe			
TTL	**54150**	† **Fairchild (616)**	75
	74150	Fairchild	
	MC74150	Motorola	
	DM54150	† National	
	DM74150	National	
	54150	† Signetics	80
	74150	**Signetics (1157)**	
	SN54150	† **TI (712)**	
	SN74150	TI	
TTL-AS	SN74AS150	TI	
TTL-LS	**SN54LS450**	† **MMI (1100)**	85
	SN74LS450	**MMI (1100)**	
	DM54LS450	† National	
	DM74LS450	National	
16-Input, Inverting Output, Three-State			
TTL-AS	SN74AS250	TI	

Multivibrators

Function	Device	Source	Line
Bidirectional Monostable (low level input)			
TTL	RC8T20	Raytheon	90
	RM8T20	† Raytheon	
	N8T20	**Signetics (1175)**	
Monostable, Schmitt Trigger Input			
TTL	**54121**	† **Fairchild (609,616,622,623)**	
	74121	Fairchild	
	MC74121	Motorola	95
	DM54121	† National	
	DM74121	National	
	54121	† Signetics	
	74121	**Signetics (1157)**	
	SN54121	† **TI (712)**	100
	SN74121	TI	
Retriggerable Monostable			
TTL	**9601C**	**Fairchild (609,617,622,623)**	
	9601M	† **Fairchild (609,617,622,623)**	
	MC8601	Motorola	
	MC9601	† Motorola	105
	DM8601	National	
	DM9601	† National	
	RF9601	Raytheon	
	S9601	† Signetics	
TTL-LS	SN74LS422	TI	110

Function	Device	Source	Line
Retriggerable Monostable with Clear			
TTL	**54122**	† **Fairchild (609,616,622,623)**	
	74122	Fairchild	
	MC74122	Motorola	
	SN54122	† **TI (712)**	
	SN74122	TI	115
TTL-LS	54LS122	† Fairchild	
	GD74LS122	**Goldstar (1066)**	
	HD74LS122	Hitachi	
	SN54LS122	† **Motorola (1131)**	
	SN74LS122	**Motorola (1131)**	120
	DM74LS122	National	
	SN54LS122	† **TI (715)**	
	SN74LS122	TI	
Retriggerable Monostable, with Reset			
TTL	**9600C**	**Fairchild (609)**	
	9600M	† **Fairchild (609)**	125
Dual Monostable, Schmitt-Trigger Input (dual 54/74121)			
TTL	54221	† Signetics	
	74221	**Signetics (1157)**	
	SN54221	† **TI (712)**	
	SN74221	TI	
TTL-LS	54LS221	† Fairchild	130
	GD74LS221	**Goldstar (1066)**	
	HD74LS221	Hitachi	
	SN54LS221	† **Motorola (1131)**	
	SN74LS221	**Motorola (1131)**	
	DM54LS221	† National	135
	DM74LS221	National	
	54LS221	† Signetics	
	SN54LS221	TI	
	SN74LS221	TI	
Dual Retriggerable Monostable (AND triggered)			
TTL-LS	SN74LS423	TI	140
Dual Retriggerable Monostable with Clear (AND triggered)			
TTL	**54123**	† **Fairchild (609,616,622,623)**	
	74123	Fairchild	
	MC74123	Motorola	
	DM54123	† National	
	DM74123	National	145
	54123	† Signetics	
	74123	**Signetics (1157)**	
	SN54123	† **TI (712)**	
	SN74123	TI	
TTL-LS	54LS123	† Fairchild	150
	GD74LS123	**Goldstar (1066)**	
	HD74LS123	Hitachi	
	SN54LS123	† **Motorola (1131)**	
	SN74LS123	**Motorola (1131)**	
	DM74LS123	National	155
	DN74LS123	Panasonic	
	SN54LS123	† **TI (715)**	
	SN74LS123	TI	
Dual Retriggerable Monostable with Reset (OR triggered)			
TTL	AM2602C	AMD	
	AM2602M	† AMD	160
	9602C	**Fairchild (609,617,622,623)**	
	9602M	† **Fairchild (609,617,622,623)**	
	96L02C	Fairchild	
	96L02M	† Fairchild	
	MC8602	Motorola	165
	MC9602	† Motorola	
	DM8602	National	
	DM9602	† National	
	N9602	**Signetics (1175)**	
	S9602	† Signetics	170
		(Continued)	

† Military Temperature Range (−55° to 125°C)

* Typical Value

Bold face indicates additional data is provided on the page noted.

DIGITAL-TTL (Cont'd)

Multivibrators (Cont'd)

Function	Device	Source	Line
Dual Retriggerable Monostable with Reset (OR triggered) (Cont'd)			
TTL-LS	**96LS02C**	**Fairchild** **(615,5311)**	
	96LS02M	† **Fairchild** **(615,5311)**	
TTL-S	AM26S02C	AMD	
	AM26S02M	† AMD	
	96S02C	Fairchild	5
	96S02M	† Fairchild	
Dual Voltage-Controlled			
TTL	MC4024	Motorola	
	MC4324	† Motorola	

Shift Registers

Function	Device	Source	Line
Diagnostic Register, 8-Bit			
TTL-S	SN54S818	† MMI	
	SN74S818	MMI	10
Pipeline Register with On-Board 8-Bit Shadow Register			
TTL-S	AM29818C	AMD	
	AM29818M	† AMD	
Serial Data Polynomial Generator/Checker			
TTL-F	**54F402**	† **Fairchild** **(1022,1028)**	
	74F402	**Fairchild** **(1022,1028,5310)**	
4-Bit Parallel In, Parallel Out, Right/Left, Three-State			
TTL-LS	**74LS295**	**Fairchild** **(5311)**	15
	SN54LS295A	† **Motorola** **(1129)**	
	SN74LS295A	**Motorola** **(1129)**	
	54LS295A	† SGS	
	74LS295A	SGS	
	54LS295B	† Signetics	20
	74LS295B	**Signetics** **(1158)**	
	SN74LS295B	TI	
4-Bit Parallel Input, Parallel Output			
TTL	54195	† Fairchild	
	74195	Fairchild	
	9300C	**Fairchild** **(609,617)**	25
	9300M	† **Fairchild** **(609,617)**	
	MC74195	Motorola	
	MC8300	Motorola	
	MC9300	† Motorola	
	DM54195	† National	30
	DM74195	National	
	DM8300	National	
	DM9300	† National	
	54195	† Signetics	
	74195	**Signetics** **(1157)**	35
	SN74195	TI	
TTL-AS	SN74AS195	TI	
TTL-F	**54F195**	**Fairchild** **(1023)**	
	74F195	**Fairchild** **(1023)**	
	MC54F195	† Motorola	40
	MC74F195	Motorola	
	74F195	**Signetics** **(1157)**	
TTL-LS	**54LS195**	† **Fairchild** **(613)**	
	74LS195	**Fairchild** **(5311)**	
	GD74LS195	**Goldstar** **(1066)**	45
	HD74LS195A	Hitachi	
	SN54LS195A	† **Motorola** **(1128)**	
	SN74LS195A	**Motorola** **(1128)**	
	DM54LS195A	† National	
	DM74LS195A	National	50
	DN74LS195A	Panasonic	
	T74LS195A	SGS	

(Continued)

Function	Device	Source	Line
4-Bit Parallel Input, Parallel Output			
TTL-LS (Cont'd)	**74LS195A**	**Signetics** **(1157)**	
	SN74LS195A	TI	
TTL-S	93S00C	Fairchild	55
	93S00M	† Fairchild	
	DM54S195	† National	
	DM74S195	National	
	54S195	† Signetics	
	74S195	**Signetics** **(1157)**	60
	SN74S195	TI	
4-Bit Parallel-In, Parallel Out, Right/Left			
TTL	**5495**	† **Fairchild** **(616)**	
	7495	Fairchild	
	MC4012	Motorola	
	MC4312	† Motorola	65
	MC7495A	Motorola	
	DM5495	† National	
	DM7495	National	
	5495A	† Signetics	
	SN7495A	TI	70
TTL-AS	DM54AS95	† National	
	DM74AS95	National	
	SN74AS95	TI	
TTL-LS	**54LS95B**	† **Fairchild** **(608,612,621,623)**	
	74LS95B	**Fairchild** **(5311)**	75
	GD74LS95	**Goldstar** **(1066)**	
	HD74LS95B	Hitachi	
	SN54LS95B	† **Motorola** **(1128)**	
	SN74LS95B	**Motorola** **(1128)**	
	DN74LS95B	Panasonic	80
	54LS95B	† SGS	
	74LS95B	SGS	
	54LS95B	† Signetics	
	74LS95B	**Signetics** **(1156)**	
	SN74LS95B	TI	85
4-Bit Parallel-In, Parallel Out, (with load, shift, hold control)			
TTL	54178	† Fairchild	
	MC7270	Motorola	
	MC8270	† Motorola	
	RC8270	Raytheon	
	RM8270	† Raytheon	90
	SN74178	TI	
4-Bit Parallel-In, Parallel Out, with Reset, Complementary Output for Last Bit			
TTL	54179	† Fairchild	
	74179	Fairchild	
	MC7271	Motorola	
	MC8271	† Motorola	95
	RC8271	Raytheon	
	RM8271	† Raytheon	
	N8271	**Signetics** **(1175)**	
	S8271	† Signetics	
	SN74179	TI	100
4-Bit Parallel-In, Parallel-Out, Cascadable, Three-State			
TTL-F	**54F395**	† **Fairchild** **(1023)**	
	74F395	**Fairchild** **(1023)**	
	74F395	**Signetics** **(1158)**	
TTL-LS	**74LS395**	**Fairchild** **(5311)**	
	GD74LS395A	**Goldstar** **(1066)**	105
	DN74LS395A	Panasonic	
	T54LS395	† SGS	
	T74LS395	SGS	
	54LS395A	† Signetics	
	74LS395A	**Signetics** **(1158)**	110
	SN74LS395A	TI	
4-Bit Parallel-In, Parallel-Out, Registered Outputs			
TTL-LS	SN74LS671	TI	
	SN74LS672	TI	

Function	Device	Source	Line
4-Bit Parallel-In, Serial-Out			
TTL	5494	† Fairchild	
	7494	Fairchild	115
	MC7494	Motorola	
	7494	**Signetics** **(1156)**	
	SN7494	TI	
4-Bit Universal Bidirectional			
TTL	54194	† Fairchild	
	74194	Fairchild	120
	MC74194	Motorola	
	DM54194	† National	
	DM74194	National	
	54194	† Signetics	
	74194	**Signetics** **(1157)**	125
	SN74194	TI	
TTL-AS	**SN54AS194**	† **TI** **(713)**	
	SN74AS194	TI	
TTL-F	**54F194**	† **Fairchild** **(610,1023)**	
	74F194	**Fairchild** **(1023,5310)**	130
	MC54F194	† **Motorola** **(1128)**	
	MC74F194	**Motorola** **(1128)**	
	74F194	**Signetics** **(1157)**	
TTL-LS	**54LS194A**	† **Fairchild** **(608,613,621,623)**	
	GD74LS194A	**Goldstar** **(1066)**	135
	HD74LS194A	Hitachi	
	SN54LS194A	† **Motorola** **(1128)**	
	SN74LS194A	**Motorola** **(1128)**	
	DM54LS194A	† National	
	DM74LS194A	National	140
	DN74LS194A	Panasonic	
	T74LS194A	SGS	
	54LS194A	† Signetics	
	74LS194A	**Signetics** **(1157)**	
	SN74LS194A	TI	145
TTL-S	54S194	† Fairchild	
	74S194	Fairchild	
	DM54S194	† National	
	DM74S194	National	
	SN74S194	TI	150
5-Bit Parallel-In, Parallel-Out			
TTL	5496	† Fairchild	
	7496	Fairchild	
	MC7496	Motorola	
	DM5496	† National	
	DM7496	National	155
	5496	† Signetics	
	7496	**Signetics** **(1156)**	
	SN7496	TI	
TTL-LS	54LS96	† Signetics	
	74LS96	**Signetics** **(1156)**	160
	SN74LS96	TI	
5-Bit Dual Parallel-In, Parallel-Out Buffer Register, (clocked flip-flops)			
TTL	RC8200	Raytheon	
	RM8200	† Raytheon	
5-Bit Dual Parallel-In, Parallel-Out Buffer Register, Inverting Output (clocked flip-flops)			
TTL	RC8201	Raytheon	
	RM8201	† Raytheon	165
8-Bit Gated Serial-In, Parallel-Out			
TTL	**54164**	† **Fairchild** **(616)**	
	74164	Fairchild	
	DM54164	† National	
	DM74164	National	
	DM7570	† National	170
	DM8570	National	
	54164	† Signetics	
	74164	**Signetics** **(1157)**	
	SN74164	TI	

(Continued)

† Military Temperature Range (−55° to 125°C)

* Typical Value

Bold face indicates additional data is provided on the page noted.

Shift Registers (Cont'd)

Function	Device	Source	Line
8-Bit Gated Serial-In, Parallel-Out (Cont'd)			
TTL-F	**54F164**	† **Fairchild** (610,1023)	
	74F164	**Fairchild** (1023,5310)	
	74F164	Signetics	
TTL-LS	**54LS164**	† **Fairchild** (613)	
	74LS164	**Fairchild** (5311)	5
	GD74LS164	**Goldstar** (1066)	
	HD74LS164	Hitachi	
	SN54LS164	† **Motorola** (1128)	
	SN74LS164	**Motorola** (1128)	
	DM54LS164	† National	10
	DM74LS164	National	
	DN74LS164	Panasonic	
	54LS164	† SGS	
	74LS164	SGS	
	54LS164	† Signetics	15
	54LS164B	† Signetics	
	74LS164	**Signetics** (1157)	
	SN74LS164	TI	
8-Bit, Inverting, Back-to-Back Configuration			
TTL-LS	SN54LS566	† MMI	
	SN74LS566	**MMI** (1107)	20
8-Bit, Non-Inverting, Back-to-Back Configuration			
TTL-LS	SN54LS546	† MMI	
	SN74LS546	**MMI** (1107)	
8-Bit, Non-Inverting, Three-State, Readback			
TTL-LS	**SN54LS794**	† **MMI** (1111)	
	SN74LS794	**MMI** (1107,1111)	
8-Bit Parallel-In, Parallel-Out, Right/Left			
TTL	54198	† Fairchild	25
	74198	Fairchild	
	DM54198	† National	
	DM74198	National	
	SN74198	TI	
TTL-F	**74F198**	**Signetics** (1157)	30
8-Bit Parallel-In, Parallel-Out, Unidirectional			
TTL	54199	† Fairchild	
	74199	Fairchild	
	54199	† Signetics	
	74199	**Signetics** (1157)	
	SN74199	TI	35
TTL-F	**74F199**	**Signetics** (1157)	
8-Bit Parallel-In, Parallel-Out, Three-State, with Positive Edge-Triggered D-Type Flip Flops (bus interface)			
TTL	AM29825	AMD	
	AM29826	AMD	
TTL-AS	SN54AS29825	† TI	
	SN54AS29826	† TI	40
	SN74AS29825	TI	
	SN74AS29826	TI	
8-Bit Parallel-In, Serial-Out, Complementary Output			
TTL	**54165**	† **Fairchild** (617)	
	74165	Fairchild	
	MC74165	Motorola	45
	DM54165	† National	
	DM74165	National	
	54165	† Signetics	
	74165	**Signetics** (1157)	
	SN74165	TI	50
TTL-ALS	DM54ALS165	† National	
	DM74ALS165	National	
TTL-F	74F165	Signetics	
TTL-LS	**54LS165**	† **Fairchild** (613)	
	74LS165	**Fairchild** (5311)	55
	GD74LS165	**Goldstar** (1066)	
	HD74LS165A	Hitachi	
	SN54LS165	† **Motorola** (1128)	
		(Continued)	
8-Bit Parallel-In, Serial-Out, Complementary Output			
TTL-LS		(Cont'd)	
	SN74LS165	**Motorola** (1128)	
	SN74LS165A	TI	60
8-Bit Parallel-In, Serial-Out with Clear			
TTL	54166	† Fairchild	
	74166	Fairchild	
	DM54166	† National	
	DM74166	National	
	54166	† Signetics	65
	74166	**Signetics** (1157)	
	SN74166	TI	
TTL-ALS	DM54ALS166	† National	
	DM74ALS166	National	
TTL-F	**74F166**	**Signetics** (1157)	70
TTL-LS	**GD74LS166**	**Goldstar** (1066)	
	SN54LS166	† **Motorola** (1128)	
	SN74LS166	**Motorola** (1128)	
	DM54LS166	† National	
	DM74LS166	National	75
	SN74LS166A	TI	
8-Bit Parallel-In, Serial-Out with Input Latches			
TTL-F	**54F597**	† **Fairchild** (1023)	
	54F598	† **Fairchild** (1023)	
	74F597	**Fairchild** (1023)	
	74F598	**Fairchild** (1023)	80
	74F597	**Signetics** (1159)	
	74F598	Signetics	
TTL-LS	**SN54LS597**	† **TI** (716)	
	SN54LS598	† **TI** (716)	
	SN74LS589	TI	85
	SN74LS597	TI	
	SN74LS598	TI	
8-Bit Serial/Parallel-In Register with Sign Extend (for use with 25LS14/74LS384 multiplier)			
TTL-F	**54F322**	† **Fairchild** (611,1023)	
	74F322	**Fairchild** (1023,5310)	
	74F322	**Signetics** (1158)	90
TTL-LS	**74LS322**	**Fairchild** (5311)	
8-Bit Serial-In, Parallel-Out Register with Output Latches			
TTL-F	**54F595**	† **Fairchild** (1023)	
	74F595	**Fairchild** (1023)	
	74F595	Signetics	
TTL-LS	**SN54LS595**	† **TI** (716)	95
	SN74LS594	TI	
	SN74LS595	TI	
	SN74LS596	TI	
	SN74LS599	TI	
8-Bit Serial-In, Serial-Out			
TTL	5491	† Fairchild	100
	7491	Fairchild	
	MC7491	Motorola	
	5491	† Signetics	
	SN7491A	TI	
TTL-LS	HD74LS91	Hitachi	105
	SN54LS91	† **Motorola** (1128)	
	SN74LS91	**Motorola** (1128)	
	SN74LS91	TI	
8-Bit Synchronous with Parallel Load and Hold			
TTL-LS	S74LS498	† MMI	
	SN54LS498	† **MMI** (1100)	110
	DM54LS498	† National	
8-Bit Synchronous with Parallel Load, Load Complement, Preset, Clear and Hold			
TTL-LS	**SN54LS380**	† **MMI** (1100)	
	SN74LS380	† **MMI** (1100)	
	DM54LS380	† National	
	DM74LS380	National	115
8-Bit Universal Shift/Storage, Three-State			
TTL-ALS	M74ALS299	Mitsubishi	
	M74ALS323	Mitsubishi	
	SN54ALS299B	† **TI** (713)	
	SN54ALS323	† **TI** (713)	
	SN74ALS299	TI	120
	SN74ALS323	TI	
TTL-AS	SN74AS299	TI	
	SN74AS323	TI	
TTL-F	**54F299**	† **Fairchild** (1023)	
	54F323	† **Fairchild** (1023)	125
	74F299	**Fairchild** (1023,5310)	
	74F323	**Fairchild** (1023,5310)	
	MC54F299	† Motorola	
	MC54F323	† Motorola	
	MC74F299	Motorola	130
	MC74F323	Motorola	
	74F299	**Signetics** (1158)	
	74F323	**Signetics** (1158)	
TTL-LS	AM25LS23C	AMD	
	AM25LS23M	† AMD	135
	SN54LS323	† AMD	
	SN74LS323	AMD	
	54LS299	† **Fairchild** (614)	
	54LS323	† **Fairchild** (614)	
	74LS299	**Fairchild** (5311)	140
	74LS323	**Fairchild** (5311)	
	GD74LS299	**Goldstar** (1066)	
	HD74LS299	Hitachi	
	SN54LS299	† **Motorola** (1129)	
	SN54LS323	† **Motorola** (1129)	145
	SN74LS299	**Motorola** (1129)	
	SN74LS323	**Motorola** (1129)	
	SN74LS299	TI	
	SN74LS323	TI	
TTL-S	**GD74S299**	**Goldstar** (1066)	150
	DM54S299	† National	
	DM74S299	National	
	SN74S299	TI	
8-Bit Dual Serial-In, Serial-Out			
TTL	**9328C**	**Fairchild** (617)	
	9328M	† **Fairchild** (617)	155
	MC8328	Motorola	
	MC9328	† Motorola	
9-Bit Parallel-In, Parallel-Out, Three-State, with Positive Edge-Triggered D-Type Flip-Flops (bus interface)			
TTL	AM29823	AMD	
	AM29824	AMD	
TTL-AS	SN54AS29823	† TI	160
	SN54AS29824	† TI	
	SN74AS29823	TI	
	SN74AS29824	TI	
10-Bit Parallel-In, Parallel-Out Buffer Register, with Reset (clocked flip-flops)			
TTL	RC8202	Raytheon	
	RM8202	† Raytheon	165
	S8202	† Signetics	
10-Bit Parallel-In, Parallel-Out Buffer Register, with Reset, Inverting Output (clocked flip-flops)			
TTL	RC8203	Raytheon	
	RM8203	† Raytheon	
10-Bit Parallel-In, Parallel-Out, Three-State, with Positive Edge-Triggered D-Type Flip-Flops (bus interface)			
TTL	AM29821	AMD	
	AM29822	AMD	170
TTL-AS	SN54AS29822	† TI	
	SN74AS29822	TI	

† Military Temperature Range (−55° to 125°C)

* Typical Value

Bold face indicates additional data is provided on the page noted.

DIGITAL–TTL (Cont'd)

Shift Registers (Cont'd)

Function	Device	Source	Line
10-Bit Parallel-In, Serial Out			
TTL	RC8274	Raytheon	
	RM8274	† Raytheon	
	N8274	**Signetics (1173)**	
10-Bit Serial-In; Parallel-Out			
TTL	RC8273	Raytheon	
	RM8273	† Raytheon	5
	N8273	**Signetics (1173)**	
	S8273	† Signetics	
16-Bit Parallel-In, Serial-Out			
TTL-F	**54F674**	**† Fairchild (1023)**	
	74F674	**Fairchild (1023)**	
	74F674	**Signetics (1159)**	10
TTL-LS	**SN54LS674**	**† Motorola (1129)**	
	SN74LS674	**Motorola (1129)**	
	SN54LS674	**† TI (716)**	
	SN74LS674	TI	
16-Bit Serial/Parallel-In, Serial Out			
	54F676	**† Fairchild**	
		(611.1023)	15
	74F676	**Fairchild**	
		(1023.5310)	
TTL-F	**74F676**	**Signetics (1159)**	
16-Bit Serial-In, Serial/Parallel Out			
	54F675	**† Fairchild (1023)**	
	74F675	**Fairchild**	
		(1023.5310)	
	74F675	**Signetics (1159)**	20
16-Bit Serial-In, Serial-Out Register plus Stored Parallel Output			
TTL-F	**54F673**	**† Fairchild (1023)**	
	74F673	**Fairchild**	
		(1023.5310)	
	74F673	**Signetics (1159)**	
TTL-LS	**SN54LS673**	**† Motorola (1129)**	
	SN74LS673	**Motorola (1129)**	25
	SN54LS673	**† TI (716)**	
	SN74LS673	TI	

Transceivers, Bus

Function	Device	Source	Line
Octal Buffer/Driver with Series Output Resistor, Inverting			
TTL-ALS	SN74ALS2240	TI	
Octal Buffer/Driver with Series Output Resistor, Non-Inverting			
TTL-ALS	SN74ALS2241	TI	
	SN74ALS2244	TI	30
Quad Transceiver, Inverting			
TTL-ALS	M74ALS1242	Mitsubishi	
	SN74ALS1242	TI	
Quad Transceiver, Non-Inverting			
TTL-ALS	M74ALS1243	Mitsubishi	
	SN74ALS1243	TI	
Quad Transceiver with Series Output Resistor, Inverting			
TTL-ALS	SN74ALS2242	TI	35
Quad Transceiver with Series Output Resistor, Non-Inverting			
TTL-ALS	SN74ALS2243	TI	
Quad Bus Transceiver			
TTL-ALS	M74ALS242	Mitsubishi	
	M74ALS243	Mitsubishi	
	DM54ALS1242	† National	
	DM54ALS1243	† National	40
	DM54ALS242	† National	
	DM54ALS243	† National	
	DM74ALS1242	National	
	DM74ALS1243	National	
	DM74ALS242	National	45
	DM74ALS243	National	
	SN74ALS242B	TI	
		(Continued)	

Function	Device	Source	Line
Quad Bus Transceiver			
TTL-ALS		(Cont'd)	
	SN74ALS242B-1	TI	
	SN74ALS243A	TI	
	SN74ALS243A-1	TI	50
TTL-AS	DM54AS242	† National	
	DM54AS243	† National	
	DM74AS242	National	
	DM74AS243	National	
	SN74AS242	TI	55
	SN74AS243	TI	
TTL-F	**54F242**	**† Fairchild (1024)**	
	54F243	**† Fairchild**	
		(610.1024)	
	74F242	**Fairchild (1024)**	
	74F243	**Fairchild (1024)**	60
	MC54F242	**† Motorola (1124)**	
	MC54F243	**† Motorola (1124)**	
	MC74F242	**Motorola (1124)**	
	MC74F243	**Motorola (1124)**	
	54F242	† Signetics	65
	54F243	† Signetics	
	74F1242	**Signetics (1160)**	
	74F1243	**Signetics (1160)**	
	74F242	**Signetics (1158)**	
	74F243	**Signetics (1158)**	70
TTL-LS	74LS242	Fairchild	
	74LS243	Fairchild	
	GD74LS243	**Goldstar (1066)**	
	HD74LS242	Hitachi	
	HD74LS243	Hitachi	75
	SN54LS242	**† Motorola (1124)**	
	SN54LS243	**† Motorola (1124)**	
	SN74LS242	**Motorola (1124)**	
	SN74LS243	**Motorola (1124)**	
	DM54LS242	† National	80
	DM54LS243	† National	
	DM74LS242	National	
	DM74LS243	National	
	54LS242	Signetics	
	54LS243	Signetics	85
	54S242	Signetics	
	54S243	Signetics	
	74LS242	**Signetics (1158)**	
	74LS243	**Signetics (1158)**	
	74S242	**Signetics (1158)**	90
	74S243	**Signetics (1158)**	
	SN74LS242	TI	
	SN74LS243	TI	
TTL-S	DM54S242	† National	
	DM54S243	† National	95
Quad Bus Transceiver, Directional Controls			
TTL-LS	SN74LS446	TI	
	SN74LS449	TI	
Quad Bus Transceiver, Open Collector			
TTL-ALS	SN54ALS759	† TI	
	SN74ALS759	TI	
TTL-AS	SN74AS758	TI	100
	SN74AS759	TI	
Quad Bus Transceiver, Three-State			
TTL-ALS	SN54ALS758	† TI	
	SN74ALS758	TI	
Quad Tridirectional Bus Transceiver, Open Collector			
TTL-LS	SN74LS440	TI	
	SN74LS441	TI	105
Quad Tridirectional Bus Transceiver, Three-State			
TTL-LS	SN74LS442	TI	
	SN74LS443	TI	
	SN74LS444	TI	
	SN74LS448	TI	

Function	Device	Source	Line
Octal Bus Driver, Inverting and Non-Inverting, Three-State			
TTL-ALS	SN54ALS230	† TI	110
	SN54ALS231	† TI	
	SN74ALS230	TI	
	SN74ALS230-1	TI	
	SN74ALS231	TI	
	SN74ALS231-1	TI	115
TTL-AS	**SN54AS230**	**† TI (713)**	
	SN54AS231	**† TI (713)**	
	SN74AS230	TI	
	SN74AS231	TI	
Octal Bus Driver, Inverting, Open Collector, Symmetrical Controls			
TTL-ALS	SN74ALS756	TI	120
	SN74ALS756-1	TI	
TTL-AS	SN74AS756	TI	
Octal Bus Driver, Inverting, Three-State, Complementary Controls	SN54S210	† MMI	
Octal Bus Driver, Inverting, Three-State, Symmetrical Controls			
TTL-ALS	DM54ALS240	† National	
	DM74ALS240	National	125
	SN74ALS1240	TI	
	SN74ALS1240-1	TI	
	SN74ALS2540	TI	
	SN74ALS540	TI	
	SN74ALS540-1	TI	130
TTL-AS	M74ALS240	Mitsubishi	
	DM54ALS1240	† National	
	DM54AS240	† National	
	DM74ALS1240	National	
	DM74AS240	National	135
	SN74ALS240A	TI	
	SN74ALS240A-1	TI	
	SN74AS240	TI	
TTL-F	**54F240**	**† Fairchild**	
		(607,610,620,623,1024)	
	54F540	**† Fairchild (1024)**	140
	74F240	**Fairchild**	
		(1024.5310)	
	74F540	**Fairchild (1024)**	
	MC54F240	**† Motorola (1124)**	
	MC74F240	**Motorola (1124)**	
	54F240	† Signetics	145
	54F540	† Signetics	
	74F1240	**Signetics (1160)**	
	74F240	**Signetics (1157)**	
	74F540	**Signetics (1159)**	
TTL-LS	**54LS240**	**† Fairchild**	
		(608,613,621,623)	150
	74LS240	**Fairchild (5311)**	
	74LS540	**Fairchild (5311)**	
	GD74LS240	**Goldstar (1066)**	
	HD74LS240	Hitachi	
	SN54LS210	† MMI	155
	SN54LS240	† MMI	
	SN54LS340	† MMI	
	SN54LS240	**† Motorola (1124)**	
	SN54LS540	**† Motorola (1125)**	
	SN74LS240	**Motorola (1124)**	160
	SN74LS540	**Motorola (1125)**	
	DM54LS240	† National	
	DM74LS240	National	
	74LS240	**Signetics (1157)**	
	74LS540	**Signetics (1159)**	165
	SN74LS240	TI	
	SN74LS540	TI	
TTL-S	**GD74S240**	**Goldstar (1066)**	
	SN74S240	MMI	
	54LS240	† Signetics	170
	54S240	† Signetics	
	74S240	**Signetics (1157)**	
		(Continued)	

† Military Temperature Range (−55° to 125°C)

* Typical Value

Bold face indicates additional data is provided on the page noted.

DIGITAL-TTL (Cont'd)

Transceivers, Bus (Cont'd)

Function	Device	Source	Line
Octal Bus Driver, Inverting, Three-State, Symmetrical Controls			
TTL-S		(Cont'd)	
	SN74S240	TI	
Octal Bus Driver, Inverting, Three-State, Symmetrical Controls, 30 ohm			
TTL-F	**74F30240**	**Signetics (1160)**	
Octal Bus Driver, Non-Inverting, Open Collector, Complementary Controls			
TTL-ALS	SN74ALS757	TI	
	SN74ALS757-1	TI	
TTL-AS	SN74AS757	TI	5
Octal Bus Driver, Non-Inverting, Three-State, Complementary Controls			
TTL-ALS	M74ALS241	Mitsubishi	
	DM54ALS1241	† National	
	DM54ALS241	† National	
	DM74ALS1241	National	
	DM74ALS241	National	10
	SN54ALS1241	† TI	
	SN74ALS1241	TI	
	SN74ALS1241-1	TI	
	SN74ALS241A	TI	
	SN74ALS241A-1	TI	15
	SN74ALS2541	TI	
	SN74ALS541	TI	
	SN74ALS541-1	TI	
TTL-AS	DM54AS241	† National	
	DM74AS241	National	20
	SN74AS241	TI	
TTL-F	**54F241**	**† Fairchild (607,610,620,623,1024)**	
	54F541	**† Fairchild (1024)**	
	74F241	**Fairchild (1024,5310)**	
	74F541	**Fairchild (1024)**	25
	MC54F241	**† Motorola (1124)**	
	MC74F241	**Motorola (1124)**	
	54F241	† Signetics	
	74F1241	**Signetics (1160)**	
	74F241	**Signetics (1157)**	30
	74F541	**Signetics (1159)**	
TTL-LS	**54LS241**	**† Fairchild (613)**	
	74LS241	**Fairchild (5311)**	
	74LS541	Fairchild	
	GD74LS241	**Goldstar (1066)**	35
	GD74LS541	**Goldstar (1066)**	
	HD74LS241	Hitachi	
	SN54LS241	† MMI	
	SN54LS310	† MMI	
	SN54LS341	† MMI	40
	SN74LS341	MMI	
	SN54LS241	**† Motorola (1124)**	
	SN54LS541	**† Motorola (1125)**	
	SN74LS241	**Motorola (1124)**	
	SN74LS541	**Motorola (1125)**	45
	DM54LS241	† National	
	DM74LS241	† National	
	54LS241	† Signetics	
	54LS541	† Signetics	
	74LS241	**Signetics (1157)**	50
	74LS541	**Signetics (1159)**	
	SN74LS241	TI	
	SN74LS541	TI	
TTL-S	SN74S241	MMI	
	54S241	† Signetics	55
	74S241	**Signetics (1157)**	
	SN74S241	TI	

Function	Device	Source	Line
Octal Bus Driver, Non-Inverting, Three-State, Complementary Controls, 30 ohm			
TTL-F	**74F30241**	**Signetics (1160)**	
Octal Bus Driver, Non-Inverting, Three-State, Symmetrical Controls			
TTL-ALS	M74ALS1244	Mitsubishi	
	M74ALS244	Mitsubishi	60
	DM54ALS1244	† National	
	DM54ALS244	† National	
	DM74ALS1244	National	
	DM74ALS244	National	
	SN54ALS1244A	**† TI (713)**	65
	SN74ALS1244A	TI	
	SN74ALS1244A-1	TI	
	SN74ALS244A	TI	
	SN74ALS244A-1	TI	
TTL-AS	DM54AS230	† National	70
	DM54AS231	† National	
	DM54AS244	† National	
	DM74AS230	National	
	DM74AS231	National	
	DM74AS244	National	75
	SN74AS244	TI	
TTL-F	**54F244**	**† Fairchild (607,610,620,623,1024)**	
	74F244	**Fairchild (1024,5310)**	
	MC54F244	**† Motorola (1124)**	
	MC74F244	**Motorola (1124)**	80
	54F244	† Signetics	
	74F1244	**Signetics (1160)**	
	74F244	**Signetics (1158)**	
TTL-LS	**54LS244**	**† Fairchild (613)**	
	74LS244	**Fairchild (5311)**	85
	GD74LS244	**Goldstar (1066)**	
	HD74LS244	Hitachi	
	SN54LS244	† MMI	
	SN54LS344	† MMI	
	SN74LS344	MMI	90
	SN54LS244	**† Motorola (1124)**	
	SN74LS244	**Motorola (1124)**	
	54LS244	† Signetics	
	SN74LS244	TI	
TTL-S	SN74S244	MMI	95
	54S244	† Signetics	
	74S244	**Signetics (1158)**	
Octal Bus Driver, Non-Inverting, Three-State, Symmetrical Controls, 30 ohm			
TTL-F	**74F30244**	**Signetics (1160)**	
Octal Bus Driver, Open Collector, Complementary Controls			
TTL-AS	SN74AS763	TI	
Octal Bus Driver, Open Collector, Symmetrical Controls			
TTL-ALS	SN54ALS760	† TI	100
	SN74ALS760	TI	
TTL-AS	SN74AS760	TI	
	SN74AS762	TI	
Octal Bus Driver (Schmitt trigger), Inverting, Three-State			
TTL-LS	SN74S310	MMI	
	SN74S340	MMI	105
	DN74LS240	Panasonic	
Octal Bus Driver (Schmitt trigger), Non-Inverting, Three-State, Complementary Controls			
TTL-LS	DN74LS244	Panasonic	
Octal Bus Driver (Schmitt trigger), Non-Inverting, Three-State, Symmetrical Controls			
TTL-LS	DN74LS241	Panasonic	
Octal Bus Transceiver, GPIB Compatible			
TTL-F	74F588	Signetics	

Function	Device	Source	Line
Octal Bus Transceiver, Interface Between OC and TS Buses			
TTL-ALS	DM54ALS1638	† National	110
	DM54ALS1639	† National	
	DM54ALS638	† National	
	DM54ALS639	† National	
	DM74ALS1638	National	
	DM74ALS1639	National	115
	DM74ALS638	National	
	DM74ALS639	National	
	SN74ALS638A	TI	
	SN74ALS638A-1	TI	
	SN74ALS639A	TI	120
	SN74ALS639A-1	TI	
TTL-AS	DM54AS638	† National	
	DM54AS639	† National	
	DM74AS638	National	
	DM74AS639	National	125
	SN74AS638	TI	
	SN74AS639	TI	
TTL-LS	SN74LS638	TI	
	SN74LS639	TI	
Octal Bus Transceiver, Inverting, Open Collector			
TTL-ALS	M74ALS642	† Mitsubishi	130
	DM54ALS642	† National	
	DM74ALS642	National	
	SN74ALS642A	TI	
	SN74ALS642A-1	TI	
TTL-AS	DM54AS642	† National	135
	DM74AS642	National	
	SN74AS642	TI	
TTL-F	**74F642**	**Signetics (1159)**	
TTL-LS	HD74LS642	Hitachi	
	SN54LS649	**† MMI (1108)**	140
	SN54LS653	**† MMI (1109)**	
	SN74LS649	**MMI (1107,1108)**	
	SN74LS653	**MMI (1107,1109)**	
	SN54LS642	**† Motorola (1125)**	
	SN74LS642	**Motorola (1125)**	145
	74LS642	**Signetics (1159)**	
	74LS642-1	**Signetics (1159)**	
	SN74LS642	TI	
	SN74LS642-1	TI	
Octal Bus Transceiver, Inverting, Three-State			
TTL-ALS	M74ALS1640	Mitsubishi	150
	M74ALS640	Mitsubishi	
	M74ALS643	Mitsubishi	
	DM54ALS1640	† National	
	DM54ALS643	† National	
	DM74ALS1640	National	155
	DM74ALS640	National	
	DM74ALS643	National	
	SN54ALS640A	**† TI (713)**	
	SN74ALS1640A	TI	
	SN74ALS1640A-1	TI	160
	SN74ALS640A	TI	
	SN74ALS640A-1	TI	
	SN74ALS643A	TI	
	SN74ALS643A-1	TI	
	SN74ALS651	TI	165
	SN74ALS652	TI	
TTL-AS	DM54AS640	† National	
	DM54AS643	† National	
	DM54AS644	† National	
	DM54AS651	† National	170
	DM54AS652	† National	
	DM74AS640	National	
	DM74AS643	National	
	DM74AS644	National	
	DM74AS651	National	175
	DM74AS652	National	
	SN54AS640	**† TI (713)**	
		(Continued)	

† Military Temperature Range (−55° to 125°C)

* Typical Value

Bold face indicates additional data is provided on the page noted.

DIGITAL-TTL (Cont'd)

Function	Device	Source	Line
Transceivers, Bus (Cont'd)			
Octal Bus Transceiver, Inverting, Three-State			
TTL-AS (Cont'd)			
	SN54AS651	† **TI (713)**	
	SN54AS652	† **TI (713)**	
	SN74AS640	TI	
	SN74AS643	TI	
	SN74AS651	TI	5
	SN74AS652	TI	
TTL-F	**MC54F640**	† **Motorola (1125)**	
	MC54F643	† **Motorola (1125)**	
	MC74F640	**Motorola (1125)**	
	MC74F643	**Motorola (1125)**	10
	74F640	**Signetics (1159)**	
TTL-LS	**GD74LS640**	**Goldstar (1066)**	
	HS74LS640	Hitachi	
	SN54LS640	† **Motorola (1125)**	
	SN54LS643	† **Motorola (1125)**	15
	SN74LS640	**Motorola (1125)**	
	SN74LS643	**Motorola (1125)**	
	54LS640	Signetics	
	74LS640	**Signetics (1159)**	
	N8T125	**Signetics (1175)**	20
	S8T125	† Signetics	
	SN74LS640	TI	
	SN74LS640-1	TI	
	SN74LS643	TI	
	SN74LS643-1	TI	25
	SN74LS651	TI	
	SN74LS652	TI	
Octal Bus Transceiver, Inverting, Three-State (Front Loading)			
TTL-LS	**SN54LS648**	† **MMI (1108)**	
	SN54LS651	† **MMI (1109)**	
	SN74LS648	**MMI (1107,1108)**	30
	SN74LS651	**MMI (1107,1109)**	
Octal Bus Transceiver, MOS Driver, Inverting			
TTL-AS	DM54AS2620	† National	
	DM74AS2620	National	
	SN74AS2620	TI	
	SN74AS2640	TI	35
Octal Bus Transceiver, MOS Driver, Non-inverting			
TTL-AS	SN74AS2623	TI	
	SN74AS2645	TI	
Octal Bus Transceiver, Noninverting, Open Collector			
TTL-ALS	M74ALS641	Mitsubishi	
	DM54ALS641	† National	
	DM74ALS641	National	40
	SN74ALS641A	TI	
	SN74ALS641A-1	TI	
TTL-AS	DM54AS641	† National	
	DM74AS641	National	
	SN74AS641	TI	45
TTL-F	**74F641**	**Signetics (1159)**	
	74F641-1	**Signetics (1159,1159)**	
TTL-LS	HD74LS641	Hitachi	
	SN54LS641	† **Motorola (1125)**	
	SN74LS641	**Motorola (1125)**	50
	54LS641	† Signetics	
	74LS641	**Signetics (1159)**	
	74LS641-1	**Signetics (1159)**	
	SN74LS641	TI	
	SN74LS641-1	TI	55
Octal Bus Transceiver, Noninverting, Three-State			
TTL-ALS	M74ALS1245	Mitsubishi	
	M74ALS1645	Mitsubishi	
	M74ALS245	Mitsubishi	
	M74ALS645	Mitsubishi	
	SN74ALS651	Motorola	60
	DM54ALS1245	† National	
(Continued)			
Octal Bus Transceiver, Noninverting, Three-State			
TTL-ALS (Cont'd)			
	DM54ALS245	† National	
	DM54ALS645	† National	
	DM74ALS1245	National	
	DM74ALS245	National	65
	DM74ALS645	National	
	SN54ALS1245A	† **TI (713)**	
	SN54ALS651	† **TI (713)**	
	SN54ALS652	† **TI (713)**	
	SN74ALS1245A	TI	70
	SN74ALS1245A-1	TI	
	SN74ALS1645A	TI	
	SN74ALS1645A-1	TI	
	SN74ALS245A	TI	
	SN74ALS245A-1	TI	75
	SN74ALS645A	TI	
	SN74ALS645A-1	TI	
TTL-AS	DM54AS245	† National	
	DM54AS645	† National	
	DM74AS245	National	80
	DM74AS645	National	
	SN54AS645	† **TI (713)**	
	SN74AS245	TI	
	SN74AS645	TI	
TTL-F	**54F245**	† **Fairchild (610,1024)**	85
	54F545	† **Fairchild (611,1024)**	
	74F245	**Fairchild (1024,5310)**	
	74F545	**Fairchild (1024,5310)**	
	MC54F245	† **Motorola (1124)**	
	MC54F2960	**Motorola (1132)**	90
	MC54F645	† Motorola	
	MC74F245	**Motorola (1124)**	
	MC74F2960	**Motorola (1132)**	
	MC74F645	Motorola	
	54F245	† Signetics	95
	54F545	† Signetics	
	74F1245	**Signetics (1160)**	
	74F245	**Signetics (1158)**	
	74F545	**Signetics (1159)**	
	74F645	**Signetics (1159)**	100
TTL-LS	DP8304B	AMD	
	54LS245	† **Fairchild (613)**	
	74LS245	**Fairchild (5311)**	
	GD74LS245	**Goldstar (1066)**	
	HD74LS245	Hitachi	105
	HD74LS645	Hitachi	
	SN54LS245	† MMI	
	SN54LS645	† MMI	
	SN54LS245	† **Motorola (1124)**	
	SN54LS645	† **Motorola (1125)**	110
	SN74LS245	**Motorola (1124)**	
	SN74LS645	**Motorola (1125)**	
	DM54LS245	† National	
	DM74LS245	National	
	DN74LS245	Panasonic	115
	54LS245	† Signetics	
	54LS645	† Signetics	
	74LS245	**Signetics (1158)**	
	74LS645	**Signetics (1159)**	
	74LS645-1	**Signetics (1159)**	120
	N8T245	**Signetics (1175)**	
	S8T245	† Signetics	
	SN54LS245	† TI	
	SN74LS245	TI	
	SN74LS645	TI	125
	SN74LS645-1	TI	
Octal Bus Transceiver, Noninverting, Three-State, 30 ohm			
TTL-F	**74F30245**	**Signetics (1160)**	
Octal Bus Transceiver, Non-Inverting, Open Collector			
TTL-LS	**SN54LS647**	† **MMI (1108)**	
	SN54LS654	† **MMI (1109)**	
	SN74LS647	**MMI (1107,1108)**	130
	SN74LS654	**MMI (1107,1109)**	
Octal Bus Transceiver, Non-Inverting, Three-State			
TTL-LS	**SN54LS646**	† **MMI (1108)**	
	SN54LS652	† **MMI (1109)**	
	SN74LS646	**MMI (1106,1108)**	
	SN74LS652	**MMI (1107,1109)**	135
Octal Bus Transceiver, True, Inverting, Open Collector			
TTL-ALS	M74ALS644	Mitsubishi	
	DM54ALS644	† National	
	DM74ALS644	National	
	SN74ALS644A	TI	
	SN74ALS644A-1	TI	140
TTL-AS	SN74AS644	TI	
TTL-LS	**SN54LS644**	† **Motorola (1125)**	
	SN74LS644	**Motorola (1125)**	
	SN74LS644	TI	
	SN74LS644-1	TI	145
Octal Bus Transceiver with Parity Generator-Checker			
TTL-F	**54F657**	† **Fairchild (1024)**	
	74F657	**Fairchild (1024)**	
	54F657	† Signetics	
	74F657	**Signetics (1159,1192)**	
Octal Bus Transceiver with Register, Inverting			
TTL-ALS	SN74ALS653	TI	150
	SN74ALS653-1	TI	
TTL-LS	SN74LS653	TI	
Octal Bus Transceiver with Register, Non-inverting			
TTL-ALS	SN74ALS654	TI	
	SN74ALS654-1	TI	
TTL-LS	SN74LS654	TI	155
Octal Bus Transceiver with Register, Open Collector			
TTL-ALS	SN74ALS649	Motorola	
	DM54ALS647	† National	
	DM54ALS649	† National	
TTL-F	54F647	† Signetics	
	54F649	† Signetics	160
	74F647	Signetics	
	74F649	**Signetics (1159)**	
Octal Bus Transceiver with Register, Open-Collector			
TTL-ALS	**SN74ALS647**	**TI (1239)**	
	SN74ALS647-1	**TI (1239)**	
	SN74ALS649	**TI (1239)**	165
	SN74ALS649-1	**TI (1239)**	
TTL-LS	SN74LS647	TI	
	SN74LS649	TI	
Octal Bus Transceiver with Register, Three-State			
TTL-ALS	**SN54ALS646**	† **TI (713,1239)**	
	SN54ALS648	† **TI (713,1239)**	170
	SN54ALS651	† **TI (713)**	
	SN54ALS652	† **TI (713)**	
	SN74ALS646	**TI (1239)**	
	SN74ALS646-1	**TI (1239)**	
	SN74ALS648	**TI (1239)**	175
	SN74ALS648-1	**TI (1239)**	
	SN74ALS651	TI	
	SN74ALS651-1	TI	
	SN74ALS652	TI	
	SN74ALS652-1	TI	180
TTL-AS	DM54AS646	† National	
	DM54AS648	† National	
	DM74AS646	National	
	SN54AS646	† **TI (713)**	
	SN54AS648	† **TI (713)**	185
	SN74AS646	TI	
	SN74AS648	TI	
(Continued)			

† Military Temperature Range (−55° to 125°C)

* Typical Value

Bold face indicates additional data is provided on the page noted.

Transceivers, Bus (Cont'd)

Function	Device	Source	Line
Octal Bus Transceiver with Register, Three-State (Cont'd)			
TTL-F	**54F543**	† **Fairchild (1024)**	
	54F544	† **Fairchild (1024)**	
	54F550	† **Fairchild (1024)**	
	54F551	† **Fairchild (1024)**	
	54F552	† **Fairchild (1024)**	5
	54F646	† **Fairchild (1024)**	
	54F648	† **Fairchild (1024)**	
	74F543	**Fairchild (1024,5310)**	
	74F544	**Fairchild (1024,5310)**	
	74F550	**Fairchild (1024,5310)**	10
	74F551	**Fairchild (1024,5310)**	
	74F552	**Fairchild (1024,5310)**	
	74F646	**Fairchild (1024)**	
	74F648	**Fairchild (1024)**	
	54F646	† Signetics	15
	54F648	† Signetics	
	74F543	**Signetics (1159)**	
	74F544	**Signetics (1159)**	
	74F550	**Signetics (1159)**	
	74F551	**Signetics (1159)**	20
	74F646	**Signetics (1159)**	
	74F648	**Signetics (1159)**	
TTL-LS	**GD74LS646**	**Goldstar (1066)**	
	SN74LS646	TI	
	SN74LS648	TI	25
	SN74LS651	TI	
	SN74LS652	TI	
Octal Bus Transceiver with Storage, Open-Collector			
TTL-ALS	M74ALS1621	† Mitsubishi	
	M74ALS1622	Mitsubishi	
	M74ALS621	Mitsubishi	30
	M74ALS622	Mitsubishi	
	DM54ALS622	† National	
	DM74ALS622	National	
	SN74ALS1621	TI	
	SN74ALS1621-1	TI	35
	SN74ALS1622	TI	
	SN74ALS1622-1	TI	
	SN74ALS621A	TI	
	SN74ALS621A-1	TI	
	SN74ALS622A	TI	40
	SN74ALS622A-1	TI	
TTL-AS	DM54AS621	† National	
	DM54AS622	† National	
	DM74AS621	National	
	DM74AS622	National	45
	SN74AS621	TI	
	SN74AS622	TI	
TTL-F	**54F621**	† **Fairchild (1024)**	
	54F622	† **Fairchild (1024)**	
	74F621	**Fairchild (1024)**	50
	74F622	**Fairchild (1024)**	
	MC54F621	† Motorola	
	MC74F621	Motorola	
	74F621	**Signetics (1159,1190)**	
	74F622	**Signetics (1159,1190)**	55
TTL-LS	**SN54LS621**	† **Motorola (1125)**	
	SN54LS622	† **Motorola (1125)**	
	SN74LS621	**Motorola (1125)**	
	SN74LS622	**Motorola (1125)**	
	54LS621	Signetics	60
	54LS622	Signetics	
		(Continued)	

Function	Device	Source	Line
Octal Bus Transceiver with Storage, Open-Collector			
TTL-LS		(Cont'd)	
	74LS621	**Signetics (1159)**	
	74LS622	**Signetics (1159)**	
	SN74LS621	TI	
	SN74LS622	TI	65
Octal Bus Transceiver with Storage, Three-State			
TTL-ALS	M74ALS620	Mitsubishi	
	M74ALS623	Mitsubishi	
	DM54ALS1620	† National	
	DM54ALS1621	† National	
	DM54ALS1623	† National	70
	DM54ALS620	† National	
	DM54ALS623	† National	
	DM74ALS1620	National	
	DM74ALS1621	National	
	DM74ALS1623	National	75
	DM74ALS620	National	
	DM74ALS623	National	
	SN54ALS620A	† **TI (713)**	
	SN54ALS623A	† **TI (713)**	
	SN74ALS620A	TI	80
	SN74ALS620A-1	TI	
	SN74ALS623A	TI	
	SN74ALS623A-1	TI	
TTL-AS	DM54AS620	† National	
	DM54AS623	† National	85
	DM74AS620	National	
	DM74AS623	National	
	SN74AS620	TI	
	SN74AS623	TI	
TTL-F	**54F620**	† **Fairchild (1024)**	90
	54F623	† **Fairchild (1024)**	
	74F620	**Fairchild (1024)**	
	74F623	**Fairchild (1024)**	
	MC54F620	† **Motorola (1125)**	
	MC54F623	† **Motorola (1125)**	95
	MC74F620	**Motorola (1125)**	
	MC74F623	**Motorola (1125)**	
	54F620	† Signetics	
	74F620	**Signetics (1159,1188)**	
	74F623	**Signetics (1159,1188)**	100
TTL-LS	**SN54LS623**	† **Motorola (1125)**	
	SN74LS620	**Motorola (1125)**	
	SN74LS623	**Motorola (1125)**	
	54LS620	Signetics	
	54LS623	† Signetics	105
	74LS620	**Signetics (1159)**	
	74LS623	**Signetics (1159)**	
	SN74LS620	TI	
	SN74LS623	TI	
Octal Bus Transceiver, Three-State, with Latch			
TTL-F	54F526	† Fairchild	110
	74F526	Fairchild	
8-Bit Bidirectional Bus Transceiver, Tri-State I/O			
TTL-LS	MM82C08	National	
	MM82PC08	National	
8-Bit to 9-Bit Parity Bidirectional Bus Transceivers, Three-State			
TTL	AM29833	AMD	
	AM29834	AMD	115
	AM29853	AMD	
	AM29854	AMD	
8-Bit Universal Transceiver, Port Controller			
TTL-AS	SN74AS852	TI	
	SN74AS856	TI	
9-Bit Bidirectional Bus Transceiver, Three-State			
TTL	AM29864	AMD	120
TTL-LS	AM29863	AMD	

Function	Device	Source	Line
10-Bit Bidirectional Bus Transceiver, Three-State			
TTL	AM29861	AMD	
	AM29862	AMD	
TTL-F	**74F861**	**Signetics (1160)**	
	74F862	**Signetics (1160)**	125

Translators

For other translators, see Interface-Sense Amplifiers and also Memory and Peripheral Drivers

Function	Device	Source	Line
Dual MOS to TTL Level, Three-State			
TTL	MC54468	† Motorola	
	MC74468	Motorola	
Dual TTL to MOS Voltage			
TTL	D139A	† Siliconix	
	D139B	Siliconix	130
TTL-ALS	DM54ALS646	† National	
	DM54ALS648	† National	
Dual 2-Input NAND TTL to MOS Voltage			
TTL	μA962AM	† Fairchild	
	MC0034	† Micra	
	MC0034C	Micra	135
	DH0034	† National	
	DH0034C	National	
	DS7800	† National	
	DS8800	National	
	SN55180	† TI	140
Quad TTL to MOS Inverter/Driver, Three-State			
TTL	SN75367	TI	
Hex DTL to TTL Inverter			
TTL	91009C	Fairchild	
Hex TTL to MOS Voltage			
TTL	DS78L12	† National	
	DS88L12	National	
	D125A	† Siliconix	145
	D125B	Siliconix	
7-Unit MOS to TTL Level Converter			
TTL	SN75270	TI	

Miscellaneous

Function	Device	Source	Line
Bidirectional Bus Extender and Repeater, Asynchronous			
TTL	**N8X41**	**Signetics (1193)**	
Bus Transfer Switch (transmit-receive connections to 4 bus terminals)			
TTL	MC4060	Motorola	
	MC74460	Motorola	150
Comparator, 10-Bit			
	SN54LS460	† **MMI (1100)**	
	SN74LS460	† **MMI (1100)**	
Contact Bounce Eliminator			
TTL	DM7544	† National	
	DM8544	National	
Cyclic Redundancy Checker			
TTL	9401C	Fairchild	155
	9401M	† Fairchild	
	N8X01A	Signetics	
	N9401	Signetics	
Data Encryption, (4 device set)			
I²L	9414STC	Fairchild	
	9414STM	† Fairchild	160
Delay Element			
TTL-LS	SN74LS31	TI	
Digital Signal Processor			
	MB8764	**Fujitsu (1611)**	
Dual 4-Input 30-Ohm Transmission Line Driver			
TTL-F	54F3040	† Signetics	
	74F3040	**Signetics (1160)**	

† Military Temperature Range (−55° to 125°C)

* Typical Value

Bold face indicates additional data is provided on the page noted.

DIGITAL–TTL (Cont'd)

Function	Device	Source	Line
Miscellaneous (Cont'd)			
Dynamic RAM Refresh Controller			
	MB1422	Fujitsu	
	SN74LS600A	TI	
	SN74LS601A	TI	
	SN74LS602A	TI	
	SN74LS603A	TI	5
Error Correction Chip (ECC)			
TTL-LS	**MB1412A**	**Fujitsu (1611)**	
	MB1426	**Fujitsu (1611)**	
Error Detection and Correction Circuit			
TTL-LS	SN74LS636	TI	
	SN74LS637	TI	
Error Detection and Correction Circuit, 16-Bit Parallel			
TTL-ALS	**SN74ALS616**	**TI (1219)**	10
	SN74ALS617	**TI (1219)**	
TTL-LS	**SN54LS630**	**† TI (716,729)**	
	SN74LS630	TI	
	SN74LS631	TI	
Field Programmable Array Logic			
TTL	DMPAL16A4M	† National	15
FIFO RAM Emulator (12-Bit address)			
TTL-LS	N8X60	Signetics	
Floating Point ALU, 32-Bit IEEE			
TTL(N)	WTL1033C	Weitek	
	WTL1033M	† Weitek	
Floating Point Multiplier, 32-Bit IEEE			
TTL(N)	WTL1032C	Weitek	
	WTL1032M	† Weitek	20
GPIB Adapter (IEEE 488 bus) See also Microprocessor Peripheral			
TTL-LS	96LS488DC	Fairchild	
	96LS488DM	† Fairchild	
GPIB Data Transceiver See also Microprocessor Peripherals			
TTL-F	**54F588**	**† Fairchild (1024)**	
	74F588	**Fairchild (1024,5310)**	
I/O Register Array (16x8 or 8x16)			
TTL-LS	N8X320	Signetics	25
Memory Mapper, Expands 4 Address Lines to 12 Address Lines			
TTL-F	54F610	† Fairchild	
	54F611	Fairchild	
	54F612	Fairchild	
	54F613	† Fairchild	
	74F610	Fairchild	30
	74F611	Fairchild	
	74F612	Fairchild	
	74F613	Fairchild	
TTL-LS	**GD74LS612**	**Goldstar (1066)**	
	SN54LS610	**† TI (729)**	35
	SN74LS610	TI	
	SN74LS611	TI	
	SN74LS612	TI	
	SN74LS613	TI	
Microprogram Sequencer			
TTL-LS	AM2909A	AMD	40
	AM2909C	AMD	
	AM2909M	† AMD	
	AM2911A	AMD	
	AM2911C	AMD	
	AM2911M	† AMD	45
	M3001	Intel	
	IDM2909AC	National	
	IDM2909AM	† National	
	IDM2911AC	National	
	IDM2911AM	† National	50
	N3001	Signetics	
	N8X02A	Signetics	
		(Continued)	

Function	Device	Source	Line
Microprogram Sequencer			
TTL-LS		(Cont'd)	
	S3001	† Signetics	
	SFC-2909	ThomsonCSF	
	SFC-2911A	ThomsonCSF	55
Micro-Address Generator (for bit slice microprocessor)			
TTL-S	SN74S482	TI	
Multimode Associative Stack			
TTL-S	DP8402	National	
Oscillator Clock/Driver			
TTL-LS	**SN54LS320**	**† TI (715)**	
	SN54LS321	**† TI (715)**	
	SN74LS320	TI	60
	SN74LS321	TI	
Phase Locked Loop			
TTL-LS	SN74LS297	TI	
Phase-Frequency Detector			
TTL	MC4044	Motorola	
	MC4344	† Motorola	
Quad 2-Input 30-Ohm Transmission Line Driver			
TTL-F	54F3037	† Signetics	65
	74F3037	**Signetics (1160)**	
Synchronous Decade Rate Multiplier			
TTL	54167	† Fairchild	
	74167	Fairchild	
	MC74167	Motorola	
	SN54167	**† TI (712)**	70
	SN74167	TI	
TTL-S	54S167	† Fairchild	
	74S167	Fairchild	
Voltage Comparator (analog input-digital output)			
TTL-S	AM686C	AMD	
	AM686M	† AMD	75
Voltage Controlled Oscillator (or crystal controlled)			
TTL-LS	SN74LS624	TI	
	SN74LS628	TI	
Voltage-Controlled Oscillator, Low Power			
TTL-LS	**SN74LS724**	**Motorola (1131)**	
Binary-To-BCD Converter			
TTL	DM54185A	† National	
	DM74185A	National	80
	DM8899	National	
	SN54185A	**† TI (712)**	
	SN74185A	TI	
BCD-To-Binary Converter			
TTL	DM54184	† National	
	DM74184	National	85
	SN54184	**† TI (712)**	
	SN74184	TI	
BCD-To-Binary Converter (three-state 54/74184)			
TTL	DM8898	National	
Dual Pulse Synchronizer/Driver			
TTL	MC74120	Motorola	
	SN54120	**† TI (712)**	90
	SN74120	TI	
Dual Voltage Controlled Oscillator (or crystal controlled)			
TTL-S	SN74LS625	TI	
	SN74LS626	TI	
	SN74LS627	TI	
	SN74LS629	TI	95
Dual 4-Bit Parity Tree			
TTL	MC4010	Motorola	
	MC4310	† Motorola	
Dual 4-Input NAND Schmitt-Trigger			
TTL	5413	† Fairchild	
	7413	Fairchild	
	MC7413	Motorola	100
	DM5413	† National	
	DM7413	National	
	5413	† Signetics	
		(Continued)	

Function	Device	Source	Line
Dual 4-Input NAND Schmitt-Trigger			
TTL		(Cont'd)	
	7413	**Signetics (1156)**	
	SN5413	**† TI (712)**	105
	SN7413	TI	
TTL-ALS	DM54ALS13	† National	
	DM74ALS13	National	
TTL-F	**54F13**	**† Fairchild (1021)**	
	74F13	**Fairchild (1021)**	110
	74F13	**Signetics (1156)**	
TTL-LS	**54LS13**	**† Fairchild (612)**	
	74LS13	**Fairchild (5311)**	
	HD74LS13	Hitachi	
	SN54LS13	**† Motorola (1125)**	115
	SN74LS13	**Motorola (1125)**	
	DM54LS13	† National	
	DM74LS13	National	
	DN74LS13	Panasonic	
	54LS132	† SGS	120
	74LS132	SGS	
	T54LS13	† SGS	
	T74LS13	SGS	
	54LS13	† Signetics	
	74LS13	**Signetics (1156)**	125
	SN54LS13	**† TI (715)**	
	SN74LS13	TI	
	SN74LS18	TI	
TTL-S	54S13	† Signetics	
Dual 4-Input 30-Ohm Transmission Line Driver			
TTL-F	**54F3040**	**† Fairchild (1021)**	130
	74F3040	**Fairchild (1021)**	
Dual 6-Input Expander (for H50, H53, H55)			
TTL-H	54H60	† Fairchild	
	SN74H60	TI	
Triple Bidirectional Bus Switch, Three-State (connects any 2 of 3 inputs together)			
TTL-S	MC6881	Motorola	
Triple 3-Input Expander (for H52)			
TTL-H	54H61	† Fairchild	135
	74H61	Fairchild	
	SN74H61	TI	
Quad Backplane Transceiver			
TTL	AM26LS38	AMD	
Quad Bus Receiver			
TTL	**N8T380**	**Signetics (1175)**	
Quad Complementary-Output Elements (for symmetrical generation of complementary outputs)			
TTL	**SN54265**	**† TI (712)**	140
	SN74265	TI	
Quad Power Strobe (Vcc strobe or digit driver)			
TTL	HD6600	† MMI	
	HD6605	MMI	
Quad 2-Input NAND Schmitt-Trigger			
TTL	54132	† Fairchild	
	74132	Fairchild	145
	MC74132	Motorola	
	DM54132	† National	
	DM74132	National	
	54132	† Signetics	
	74132	**Signetics (1157)**	150
	SN54132	**† TI (712)**	
	SN74132	TI	
TTL-ALS	DM54ALS132	† National	
	DM74ALS132	National	
TTL-F	**54F132**	**Fairchild (1021)**	155
	74F132	**Fairchild (1021)**	
	74F132	**Signetics (1157)**	
TTL-LS	54LS132	† Fairchild	
	74LS132	**Fairchild (5311)**	
	GD74LS132	**Goldstar (1066)**	160
		(Continued)	

† Military Temperature Range (−55° to 125°C)

* Typical Value

Bold face indicates additional data is provided on the page noted.

DIGITAL–TTL (Cont'd)

Function	Device	Source	Line
Miscellaneous (Cont'd)			
Quad 2-Input NAND Schmitt-Trigger			
TTL-LS (Cont'd)	HD74LS132	Hitachi	
	SN54LS132	† **Motorola (1125)**	
	SN74LS132	**Motorola (1125)**	
	DM54LS132	† National	
	DM74LS132	National	5
	DN74LS132	Panasonic	
	54LS132	† Signetics	
	54LS132A	† Signetics	
	74LS132	**Signetics (1157)**	
	SN54LS132	† **TI (715)**	10
	SN74LS132	TI	
	SN74LS24	TI	
TTL-S	54S132	† Fairchild	
	74S132	Fairchild	
	SN54S132	† **TI (716)**	15
	SN74S132	TI	
Quad 2-Input 30-Ohm Transmission Line Driver			
TTL-F	**54F3037**	† **Fairchild (1021)**	
	74F3037	**Fairchild (1021)**	
	74F3038	**Signetics (1160)**	
Hex Current Sensing Interface Gate			
TTL-LS	**SN54LS63**	† **TI (715)**	20
	SN74LS63	TI	
Hex Schmitt Trigger, Inverting			
TTL	**5414**	† **Fairchild (616)**	
	7414	Fairchild	
	MC7414	Motorola	
	DM5414	† National	25
	DM7414	National	
	5414	† Signetics	
	7414	**Signetics (1156)**	
	SN5414	† **TI (712)**	
	SN7414	TI	30
TTL-ALS	DM54ALS14	† National	
	DM74ALS14	National	
TTL-F	**54F14**	† **Fairchild (1021)**	
	74F14	**Fairchild (1021)**	
	74F14	**Signetics (1156)**	35
TTL-LS	**54LS14**	† **Fairchild (612)**	
	74LS14	**Fairchild (5311)**	
	GD74LS14	**Goldstar (1066)**	
	HD74LS14	Hitachi	
	SN54LS14	† **Motorola (1125)**	40
	SN74LS14	**Motorola (1125)**	
	DM54LS14	† National	
	DM74LS14	National	
	DN74LS14	Panasonic	
	54LS14	† SGS	45
	74LS14	SGS	
	54LS14	† Signetics	
	74LS14	**Signetics (1156)**	
	SN54LS14	† **TI (715)**	
	SN74LS14	TI	50
	SN74LS19	TI	
Decade Sequencer (sequential 1 of 10 decoder), Adjustable Sequence Length			
TTL	9320C	Fairchild	
3-2-2-3-Input AND-OR Expander (for H50, H53, H55)			
TTL-H	54H62	† Fairchild	
	74H62	Fairchild	
	SN74H62	TI	55
4-Bit Parallel Bus Transceiver, Inverting Three-State			
TTL-S	**MC8T26A**	**Motorola (3210)**	
	DS8T26A	National	
	DS8T26AM	† National	
	N8T126	† **Signetics (1175)**	
	N8T127	**Signetics (1175)**	60
	N8T26A	**Signetics (1175)**	
(Continued)			
4-Bit Parallel Bus Transceiver, Inverting Three-State			
TTL-S (Cont'd)	S8T126	† Signetics	
	S8T127	† Signetics	
	S8T26A	† Signetics	
	N8T26	TI	65
	N8T26A	TI	
	SN75136	TI	
4-Bit Parallel Bus Transceiver, Non-Inverting, Three-State			
TTL-S	N8T28	AMD	
	MC6889	**Motorola (3210)**	
	MC8T28	**Motorola (3210)**	70
	DS8T28	National	
	DS8T28M	† National	
	N8T128	**Signetics (1175)**	
	N8T129	**Signetics (1175)**	
	N8T28	**Signetics (1175)**	75
	S8T128	† Signetics	
	S8T129	† Signetics	
	S8T28	† Signetics	
4-Bit Parallel Bus Transceiver, Open Collector Drivers			
TTL-S	AM26S10C	AMD	
	AM26S10M	† AMD	80
	AM26S11C	AMD	
	AM26S11M	† AMD	
	AM26S12AC	AMD	
	AM26S12AM	† AMD	
	AM26S12C	AMD	85
	AM26S12M	† AMD	
	μA9640C	Fairchild	
	μA9640M	† Fairchild	
	MC26S10	**Motorola (3210)**	
	MC26S11	Motorola	90
	DS26S10C	National	
	DS26S10M	† National	
	DS26S11C	National	
	DS26S11M	† National	
	AM26S10M	† **TI (721)**	95
	AM26S11M	† **TI (721)**	
4-Bit Parallel Universal Bus Transceiver, Storage, Three-State			
TTL-S	**SN54S226**	† **TI (716)**	
	SN74S226	TI	
4-Bit Priority Register, Cascadable			
TTL	**SN54278**	† **TI (712)**	
	SN74278	TI	100
4-Bit Shifter, Three-State (shifts 0, 1, 2, or 3-bits under 2-line select control)			
TTL-S	AM25S10C	AMD	
	AM25S10M	† AMD	
4-Bit True/Complement Zero/One Element			
TTL-H	54H87	† Fairchild	
	74H87	Fairchild	
	MC54H87	† Motorola	105
	MC74H87	Motorola	
	SN74H87	TI	
4-Bit Universal Presettable Polynomial Generator			
TTL	MC8504	Motorola	
6-Bit Synchronous Binary Rate Multiplier			
TTL	**5497**	† **Fairchild (616)**	
	7497	Fairchild	110
	MC7497	Motorola	
	SN5497	† **TI (712)**	
	SN7497	TI	
8-Bit Bidirection I/O Port			
TTL-S	N8T31	Signetics	
8-Bit Bidirectional I/O Port, Latched, Addressable			
TTL-S	N8T32	Signetics	115
	N8T33	Signetics	
	N8T36	Signetics	
	S8T32	† Signetics	
	S8T33	† Signetics	
(Continued)			
8-Bit Bidirectional I/O Port, Latched, Addressable			
TTL-S (Cont'd)	S8T35	† Signetics	120
	S8T36	† Signetics	
	S8T39	† Signetics	
8-Bit Parity Tree			
TTL	MC4008	Motorola	
	MC4308	† Motorola	
	MC74408	Motorola	125
8-Bit Position Scaler (The output is shifted with respect to the input up to 8 positions as determined by a 3-bit selector code.)			
TTL	RC8243	Raytheon	
	RM8243	† Raytheon	
8-Bit Successive Approximation Register			
TTL	AM2502C	AMD	
	AM2502M	† AMD	
	AM2503C	AMD	130
	AM2503M	† AMD	
	DM2502C	National	
	DM2502M	† National	
TTL-LS	**54LS502**	† **Fairchild (614)**	
	54LS503	† **Fairchild (614)**	135
	74LS502	**Fairchild (5311)**	
	74LS503	**Fairchild (5311)**	
8-Bit Universal Transceiver/Port Controller			
TTL-AS	**SN74AS877**	**TI (1255)**	
8-Input Priority Encoder			
TTL	9318C	Fairchild	
	9318M	† Fairchild	140
	MC8318	Motorola	
	MC9318	† Motorola	
	DM54148	† National	
	DM74148	National	
	DM8318	National	145
	DM9318	† National	
	54148	† Signetics	
	74148	**Signetics (1157)**	
	SN54148	† **TI (712)**	
	SN74148	TI	150
TTL-F	**54F148**	† **Fairchild (1028)**	
	74F148	**Fairchild (1028,5310)**	
	74F148	**Signetics (1157)**	
TTL-LS	AM25LS2513C	AMD	
	AM25LS2513M	† AMD	155
	AM2913C	AMD	
	AM2913M	† AMD	
	HD74LS148	Hitachi	
	SN54LS148	† **Motorola (1131)**	
	SN54LS748	† **Motorola (1131)**	160
	SN74LS148	**Motorola (1131)**	
	SN74LS748	**Motorola (1131)**	
	SN54LS148	† **TI (715)**	
	SN74LS148	TI	
TTL-S	**SN54S148**	† **MMI (1103)**	165
	SN74S148	† **MMI (1103)**	
	SN54S148	† Motorola	
8-Input Priority Encoder, Three State			
TTL-LS	SN54LS348	† Motorola	
	SN74LS348	**Motorola (1131)**	
	SN54LS348	† **TI (715)**	170
	SN74LS348	TI	
TTL-S	**SN54S348**	† **MMI (1103)**	
	SN74S348	**MMI (1103)**	
	SN54S348	† Motorola	
TTL-LS	**SN54LS848**	† **Motorola (1131)**	175
	SN74LS848	**Motorola (1131)**	

† Military Temperature Range (−55° to 125°C)

* Typical Value

Bold face indicates additional data is provided on the page noted.

DIGITAL–TTL (Cont'd)

Function	Device	Source	Line
Miscellaneous (Cont'd)			
9-Bit Odd/Even Parity Generator/Checker			
TTL	54180	† Fairchild	
	74180	Fairchild	
	MC74180	Motorola	
	DM54180	† National	
	DM74180	National	5
	RC8262	Raytheon	
	RM8262	† Raytheon	
	54180	† Signetics	
	74180	**Signetics (1157)**	
	N8262	**Signetics (1175)**	10
	S8262	† Signetics	
	SN54180	**† TI (712)**	
	SN74180	TI	
TTL-AS	DM54AS280	† National	
	DM74AS280	National	15
	SN74AS280	TI	
TTL-F	**54F280**	**† Fairchild (607,611,620,623,1026)**	
	74F280	**Fairchild (1026,5310)**	
	MC54F280	**† Motorola (1132)**	
	MC74F280	**Motorola (1132)**	20
	54F280	† Signetics	
	74F280A	**Signetics (1158)**	
TTL-LS	**GD74LS280**	**Goldstar (1066)**	
	HD74LS280	Hitachi	
	SN54LS280	**† Motorola (1132)**	25
	SN74LS280	**Motorola (1132)**	
	SN54LS280	**† TI (715)**	
	SN74LS280	TI	
TTL-S	AM82S62C	AMD	
	AM82S62M	† AMD	30
	54S280	† Fairchild	
	93S62C	Fairchild	
	93S62M	† Fairchild	
	GD74S280	**Goldstar (1066)**	
	DM54S280	† National	35
	DM74S280	National	
	54S280	† Signetics	
	74S280	**Signetics (1158)**	
	N82S62	**Signetics (1175)**	
	SN54S280	**† TI (716)**	40
	SN74S280	TI	
9-Bit Parity Generator/Checker with Parity I/O Port			
TTL-AS	DM54AS286	† National	
	DM74AS286	National	
	SN74AS286	TI	
10-Bit Priority Encoder			
TTL	54147	† Signetics	45
	74147	**Signetics (1157)**	
	SN54147	**† TI (712)**	
	SN74147	TI	
TTL-LS	**SN54LS147**	**† Motorola (1131)**	
	SN74LS147	**Motorola (1131)**	50
	SN54LS147	**† TI (715)**	
	SN74LS147	TI	
12-Bit Successive Approximation Register			
TTL	AM2504C	AMD	
	AM2504M	† AMD	
	DM2504C	National	55
	DM2504M	† National	
12-Input Odd/Even Parity Checker/Generator			
TTL	**9348C**	**Fairchild (617)**	
	9348M	**† Fairchild (617)**	
TTL-S	AM93S48C	AMD	
	AM93S48M	† AMD	60

Function	Device	Source	Line
16-Stage Programmable Counter/Divider			
	54F525	**† Fairchild (1023,1026)**	
	74F525	**Fairchild (1023,1026,5310)**	
32-Bit Parallel Error Detection and Correction Circuit			
TTL-ALS	**SN74ALS632A**	**TI (1228)**	
	SN74ALS633	**TI (1228)**	
	SN74ALS634	**TI (1228)**	65
	SN74ALS635	**TI (1228)**	
32-Bit Parallel Error Detection and Correction Circuit, See also Interface, Error Checking Circuit.			
TTL-ALS	**SN54ALS632**	**† TI (729,1228)**	

† Military Temperature Range (−55° to 125°C)

* Typical Value

Bold face indicates additional data is provided on the page noted.

DIGITAL-Special

Function	Device	Source
Arithmetic Processor (supply 5-12 V)	AM9511A	AMD
Baud Rate Generator/Programmable Divider, Dual (ROM controlled divider)	COM5016	SMC
	COM5016T	SMC
	COM5036	SMC
	COM5036T	SMC
	COM8116	SMC
	COM8116T	SMC
	COM8136	SMC
	COM8136T	SMC
	COM8156	SMC
	COM8156T	SMC
	WD1943	Western
Baud Rate Generator/Programmable Divider (ROM controlled divider)	MM5307	National
	COM5026	SMC
	COM5026T	SMC
	COM5046	SMC
	COM5046T	SMC
	COM8046	SMC
	COM8046T	SMC
	COM8126	SMC
	COM8126T	SMC
	COM8146	SMC
	COM8146T	SMC
Bidirectional Interface Circuit, High Voltage	TEA1512	ThomsonCSF
Calculators: See Linear-Consumer		
Comparator/Mux, 6 Decade, 7 Level, Latched and Multiplexed Output (use with 6 decade counter)	LS7240	LSIComp
Counter/Display Decoder, 4 Decade (7 segment and BCD outputs, 0.25 MHz; supply 5 V)	MIC5002	Micrel
	MIC5005	Micrel
	MIC5007	Micrel
	MK5002	Mostek
	MK5005	Mostek
	MK5007	Mostek
Counter/Display Driver, 1 Decade Up/Down, Preset (7 segment and BCD output, 1 MHz)	HCTR0107	Hughes
Counter/Display Driver, 6 Decade Up/Down (7 segment and BCD output, 1 MHz, presettable compare register, latched output, LED drive maximum count 999999, 995959, or 595999 versions supply 10-15 V)	MK50395	Mostek
	MK50396	Mostek
	MK50397	Mostek
	MK50398	Mostek
	MK50399	Mostek
Counter Logic Control (use with MC12013 and MC4016)	MC12014	Motorola
Counter, Nonvolatile	ER1000	GI
Counter/Timer, 4 Digit Up/Down Presettable Counter/Timer, Settable Register with Comparison to Counter, Multiplexed 7-Segment and BCD Output (maximum count 5959)	**ICM7217B**	**Intersil (1089)**
Counter/Timer, 4 Digit Up/Down Presettable Counter/Timer, Settable Register with Comparison to Counter, Multiplexed 7-Segment, and BCD Output (maximum count 5959)	**ICM7217C**	**Intersil (1089)**
Counter/Timer, 4 Digit Up/Down Presettable Counter/Timer, Settable Register with Comparison to Counter, Multiplexed 7-Segment and BCD Output (maximum count 5959)	**ICM7227B**	**Intersil (1089)**
	ICM7217B	Maxim
Counter/Timer, 4 Digit Up/Down Presettable Counter/Timer, Settable Register with Comparison to Counter, Multiplexed 7-Segment, and BCD Output (maximum count 5959)	ICM7217C	Maxim
Counter/Timer, 4-Digit Up/Down Presettable Counter/Timer, Settable Register with Comparison to Counter, Multiplexed 7-Segment and BCD Output (maximum count 5959)	**ICM7227C**	**Intersil (1089)**
Counter Time-Base (oscillator, programmable divider, 10^1 to 10^8, 2x1037, 6x1037, $6x10^8$ and $36x10^8$, supply -12,5 V)	MK5009	Mostek
Counter, Universal (8 decade)/Latch/Display Driver (direct 7 segment and digit drivers for common anode LEDs: 'A' types	**ICM7216A**	**Intersil (1089)**
	ICM7216B	**Intersil (1089)**
	ICM7226A	**Intersil (1089)**
	ICM7226B	**Intersil (1089)**
Counter, Dual (two 3-decade up/down counters with latch, BCD output, 0.5 MHz, supply 5-15 V)	LS7040	LSIComp
Counter, Dual 16-Bit Binary Up Counter with 32-Bit Latch, Multiplexer and Three-State Drivers	**LS7062**	**LSIComp (1099)**
Counter, Dual 16-Bit, Prescalable, Multiplexed and Latched Outputs (5 V supply)	**LS7063**	**LSIComp (1099)**
Counter, 6 Decade Up/Down (predetermining, 3 pre-set storage registers, latched output)	LS7050	LSIComp
	LS7055	**LSIComp (1099)**
	LS7056	**LSIComp (1099)**
Counter, 6 Decade, BCD Output, 5 MHz, 8 Latches (supply 5-15 V)	**LS7031**	**LSIComp (1099)**
Counter, 8 Decade Frequency Counter/Latch/Display Driver (Direct 7 segment and digit drivers for common anode LEDs: 7216C. common cathode LEDs: 7216D. DC to 10 MHz, 5 V supply)	**ICM7216C**	**Intersil (1089)**
	ICM7216D	**Intersil (1089)**
Counter, 8 Decade, BCD and 7 Segment Outputs, 5 MHz, Latches (supply 5-15 V)	**LS7030**	**LSIComp (1099)**
Counter, 24-Bit, Universal	**LS7066**	**LSIComp (1099)**
Counter, 32-Bit, Multiplexed and Latched Outputs (5 V supply)	**LS7060**	**LSIComp (1099)**
Counter, 32-Bit, 8-Bit Prescalable, Multiplexed and Latched Outputs (5 V supply)	**LS7061**	**LSIComp (1099)**
Counter, 3 Timers, 0.01 to 99 sec Counter	**RP5C06**	**Panatech (4133)**
Counters-See also CMOS and TTL-Counters		
Data Encryption Device (NBS standard)	WD2001	Western
	WD2002	Western
Data Security Device (data encryption standard)	MC6859	Motorola
Data Security, Keyed Access EPROM	**27916**	**Intel (4080)**
Digital Gain Set, for setting gain of op-amps	LF13006	National
	LF13007	National
Divider, Adjustable, for 500 MHz	S89	Siemens
Divider, Divide by 1, 10, 100, 1000	SAJ141	Siemens
Divider, Divide by 2, Above 1 GHz	SP8606B	Plessey
	SP8606M	Plessey
Divider, Divide by 2, to 2 GHz, ECL Output	U822BS	Telefunken
Divider, Divide by 2, 0.2 to 1 GHz	SP8602A	† Plessey
	SP8602B	Plessey
	SP8605B	Plessey
	SP8605M	Plessey
	SP8607A	† Plessey
	SP8607B	Plessey
Divider, Divide by 2, 740 MHz	MC12090	Motorola
Divider, Divide by 3/4, 40 to 300 MHz	SP8720	Plessey
Divider, Divide by 4, 0.07 to 1 GHz	SP8613	Plessey
	SA1034	Signetics
	SA1534	Signetics
Divider, Divide by 4, 0.1 to 1.5 GHz	S1534	Signetics
Divider, Divide by 4, 0.15 to 1 GHz	SP8600A	† Plessey
	SP8600B	Plessey
Divider, Divide by 5/6, to 1 MHz	**RED5/6**	**LSIComp (1099)**
Divider, Divide by 5/6, 0.2 to 1 GHz	MC12009	Motorola
	MC12509	† Motorola
	SP8740A	† Plessey
	SP8740B	Plessey
Divider, Divide by 6/7, 0.2 to 1 GHz	SP8741A	† Plessey
	SP8741B	Plessey
Divider, Divide by 8, 0.25 to 1 GHz	SP8735B	Plessey
Divider, Divide by 8/9, 0.25 to 1 GHz	MC12011	Motorola
	MC12511	† Motorola
	SP8743B	Plessey
	SP8743M	Plessey
Divider, Divide by 10, Above 1 GHz	SP8665B	Plessey
	SP8668B	Plessey
Divider, Divide by 10, 0.2 to 1 GHz	SP8630A	† Plessey
	SP8630B	Plessey
Divider, Divide by 10/100/1000/10,000 to 2 MHz	**RDD104**	**LSIComp (1099)**
Divider, Divide by 10/11, 0.2 to 1 GHz	MC12013	Motorola
	MC12513	† Motorola
	SP8643B	Plessey
	SP8647A	† Plessey
	SP8647B	Plessey
	SP8680A	† Plessey
	SP8680B	Plessey
	SP8685A	† Plessey
	SP8685B	Plessey
	SP8690A	† Plessey
	SP8690B	Plessey
Divider, Divide by 10/20	MB467	Fujitsu

† Military Temperature Range (−55° to 125°C)

* Typical Value

Bold face indicates additional data is provided on the page noted.

DIGITAL-Special (Cont'd)

Function	Device	Source	Line
Divider, Divide by 16, 0.2 to 1 GHz			
	SP8659A	† Plessey	
	SP8659B	Plessey	
Divider, Divide by 16/17, 32/33			
	MB503	**Fujitsu (1611)**	
Divider, Divide by 20, 0.2 to 1 GHz			
	DS8628	National	
	SP8657A	† Plessey	5
	SP8657B	Plessey	
	SP8658	Plessey	
Divider, Divide by 20/21, to 225 MHz			
	DS8614	National	
Divider, Divide by 24, 0.2 GHz			
	DS8627	National	
Divider, Divide by 32, 0.2 to 1 GHz			
	SP8655A	† Plessey	10
	SP8655B	Plessey	
Divider, Divide by 32/33, 225 MHz			
	MC12015	Motorola	
Divider, Divide by 32/33, to 225 MHz			
	DS8615	National	
Divider, Divide by 32/33, 64/65			
	MB504	**Fujitsu (1611)**	
Divider, Divide by 40/41, 225 MHz			
	MC12016	Motorola	15
Divider, Divide by 40/41, to 225 MHz			
	DS8616	National	
Divider, Divide by 50/60, to 1 MHz			
	RED50/60	**LSIComp (1099)**	
Divider, Divide by 64, above 1 GHz			
	SP8755A	† Plessey	
	SP8755B	Plessey	
	U264	Telefunken	20
Divider, Divide by 64, 0.03 to 1 GHz, ECL Output			
	U664B	Telefunken	
	U664BS	Telefunken	
Divider, Divide by 64, 0.03 to 1.2 GHz, ECL Output			
	U624BS	Telefunken	
Divider, Divide by 64/65, 128/129 to 1.1			
	MB501L	**Fujitsu (1611)**	
Divider, Divide by 64/65, 225 MHz			
	MC12017	Motorola	25
Divider, Divide by 64, 1 GHz			
	SAB1164	**Signetics (3731)**	
	SAB1165	**Signetics (3731)**	
Divider, Divide by 64, 1.1 GHz			
	MC12073	Motorola	
Divider, Divide by 64, 225 MHz			
	MC12023	Motorola	
Divider, Divide by 64/256, 90-1000 MHz			
	MC12071	Motorola	30
	DS8621	National	
	CA3163	RCA	
Divider, Divide by 64/65, to 225 MHz			
	DS8617	National	
Divider, Divide by 64/65, 128/129			
	MB501	**Fujitsu (1611)**	
Divider, Divide by 100, to 150 MHz			
	DS8629	National	35
	SP8629	Plessey	
Divider, Divide by 100/120			
	RED100/120	**LSIComp (1099)**	
Divider, Divide by 126/128 (VHF) or 252/256 (UHF)			
	DS8622	National	
Divider, Divide by 128/129, 1 GHz			
	MC12022	Motorola	
Divider, Divide by 128/129, 520 MHz			
	MC12018	Motorola	40
Divider, Divide by 128, 256 to 2.4 GHz			
	MB505-24	Fujitsu	
Divider, Divide by 239,240,255,256, to 0.5 GHz			
	SP8906	Plessey	
Divider, Divide by 248/256, to 1 GHz			
	SAB1077	Signetics	
Divider, Divide by 256, above 1 GHz			
	U266	Telefunken	
Divider, Divide by 256, 0.03 to 1 GHz, ECL Output			
	U666B	Telefunken	45
	U666BS	Telefunken	
Divider, Divide by 256, 0.03 to 1 GHz, TTL Output			
	U666BST	Telefunken	
Divider, Divide by 256, 0.03 to 1.2 GHz, ECL Output			
	U626BS	Telefunken	
Divider, Divide by 256, 0.03 to 1.3 GHz, ECL Output			
	U636BS	Telefunken	
Divider, Divide by 256, 0.03 to 1.5 GHz, ECL Output			
	U656BS	Telefunken	50
Divider, Divide by 256, 0.2 to 1 GHz			
	SAB1018	Signetics	
	SAB1018A	Signetics	
Divider, Divide by 256, 1 GHz			
	SAB1256	**Signetics (3731)**	
Divider, Divide by 256, 1.1 GHz			
	MC12074	Motorola	
	MC12075	Motorola	55
Divider, Divide by 300/360			
	RED300/360	**LSIComp (1099)**	
Divider, Divide by 478,480,510,512, to 1 GHz			
	SP8901	Plessey	
Divider, Divide by 960/1024, 0.03 to 1 GHz, TTL Output			
	U665B	Telefunken	
Divider, Divide by 3000/3600			
	RED3000/3600	**LSIComp (1099)**	
Divider, Divide by 4096, 0.03 to 1 GHz, TTL Output			
	U496BS	Telefunken	60
Divider, Divide by 4/10/11/20/21			
	TD6109	Toshiba	
Divider Extender, Divide by 4, to Extend Division Ratios of Two Modulus Counters while Maintaining the Difference (i.e., 5/6 to 20/21)			
	SP8790A	† Plessey	
	SP8790B	Plessey	
Divider Extender, Divide by 8 (i.e., extends 5/6 to 40/41)			
	SP8794A	† Plessey	
	SP8794B	Plessey	65
Divider, Programmable; 6- 1/2 Decade, to 4.5 GHz			
	HEF4751	Signetics	
DVM Logic: See also Interface-Analog to Digital Converters, Decimal Output			
Frequency Synthesizers: See Linear-Phase Locked Loop Circuits			
Frequency to Voltage: See Linear-Other Devices			
Hall Effect Switch (senses magnetic field)			
	DN6835	Panasonic	70
	DN6837	Panasonic	
	DN6838	Panasonic	
	DN6839	Panasonic	
	DN834	Panasonic	
	DN835	Panasonic	75
	DN837	Panasonic	
	DN838	Panasonic	
	DN839	Panasonic	
	UGN-3013T	Sprague	
	UGN-3019	Sprague	80
	UGN-3020T	Sprague	
	UGN-3030	Sprague	
	UGN-3040T	Sprague	
		(Continued)	
Hall Effect Switch (senses magnetic field) (Cont'd)			
	UGN-3201M	Sprague	
	UGN-3203M	Sprague	85
	UGN-3220S	Sprague	
	UGN-3501	Sprague	
	UGS-3019	† Sprague	
	UGS-3020	† Sprague	
	UGS-3030	† Sprague	90
	TL170C	TI	
Inverter, Triple PMOS			
	LM8942	Sanyo	
LED Driver System, 8 Decade 8x8 Memory, Decoder (versions either hardwire or processor controlled			
	ICM7218A	**Intersil (1091)**	
	ICM7218B	**Intersil (1091)**	
	ICM7218C	**Intersil (1091)**	95
	ICM7218D	**Intersil (1091)**	
	ICM7218E	**Intersil (1091)**	
	ICM7218A	Maxim	
	ICM7218B	Maxim	
	ICM7218C	Maxim	100
	ICM7218D	Maxim	
Multiplexer/Demultiplexer, 8-Channel Latched, Binary Addressable (supply -5 to -70 V)			
	LS7110	**LSIComp (1099)**	
Multiplier (16x16)			
	WTL1516	Weitek	
Multiplier-Accumulator (16x16)			
	WTL1010C	Weitek	
	WTL1010M	† Weitek	105
PIN Diode Drivers			
	DH0035	† National	
	DH0035C	National	
	UDS-5791H	† Sprague	
Programmable Digital Output Correlator (1x128-bit)			
	TMC2221	TRW-LSI	
Programmable Digital Output Correlator (4x32-bit)			
	TMC2020	TRW-LSI	110
Programmable Diode Martix, 8x10			
	S416	Siltronics	
Programmable Diode Matrix, 10x16			
	S353	Siemens	
Regulators, Switching: See Linear-Other Devices			
Schmitt Trigger, Programmable			
	CA3099	† RCA	
Schmitt Trigger (supply 8 to 16 V)			
	LB8015	Sanyo	115
Schmitt Trigger, Zener Clamped Output (supply 2.2 to 6 V)			
	CS102	Cherry	
Schmitt Trigger, Dual, Complementary Open Collector Outputs (supply 2.2 to 6 V)			
	CS122	Cherry	
Schmitt Trigger, Dual, Low Voltage			
	SN76811	TI	

† Military Temperature Range (−55° to 125°C)

* Typical Value

Bold face indicates additional data is provided on the page noted.

SECTION	PRODUCTS IN SECTION
Digital	Arithmetic functions, buffers/inverters, counters, decoders, drivers, flip-flops, gates, latches, memories, multiplexers, multivibrators, oscillators/dividers, shift registers, translators.
Military	Military-commercial and commercial-military cross-references; QPL-38510/xx list; military ICs.
Microprocesser	Microprocessors, microcomputers, and microprocessor system components.
Microprocessor Development Systems	Systems covered range from simple, single-user, text-editing stations to multi-user computers dedicated to software development.
Microcomputer Support Boards	Boards with functions and peripheral controllers.
Interface	Analog switches, analog-to-digital converters, digital-to-analog converters, display converters, display drivers, error checking circuits, keyboard encoders-decoders, drivers, sense amplifiers, and transmitters/receivers.
Linear	Special-purpose amplifiers, arrays, comparators, consumer circuits, followers, operational amplifliers, phase locked loop circuits, telecommunication circuits, timers, voltage regulators, and special functions.
Memory	Character generators, code converters, FIFOs, LIFOS, E^2PROMs, PROMs, RAMs, ROMs and shift registers.
Custom/ Semicustom	Custom/Semicustom linear and digital gate arrays, standard cells, programmable logic arrays (PLAs), and all compatible design tools.
Design Automation	Design Automation interrelated tables showing relationships among workstations, computers, software, semicustom manufacturers and CAE/CAD providers.
SMD Packages	Surface Mount Directory from base device numbers to surface mount packages and suppliers.
Alternate Source Directory	Alternate Source Directory... Industry-wide alternate source cross reference pin-for-pin and functional equivalents to available ICs.

SIX KEY PHASES OF NEW SYSTEM DEVELOPMENT

Planning

A good design

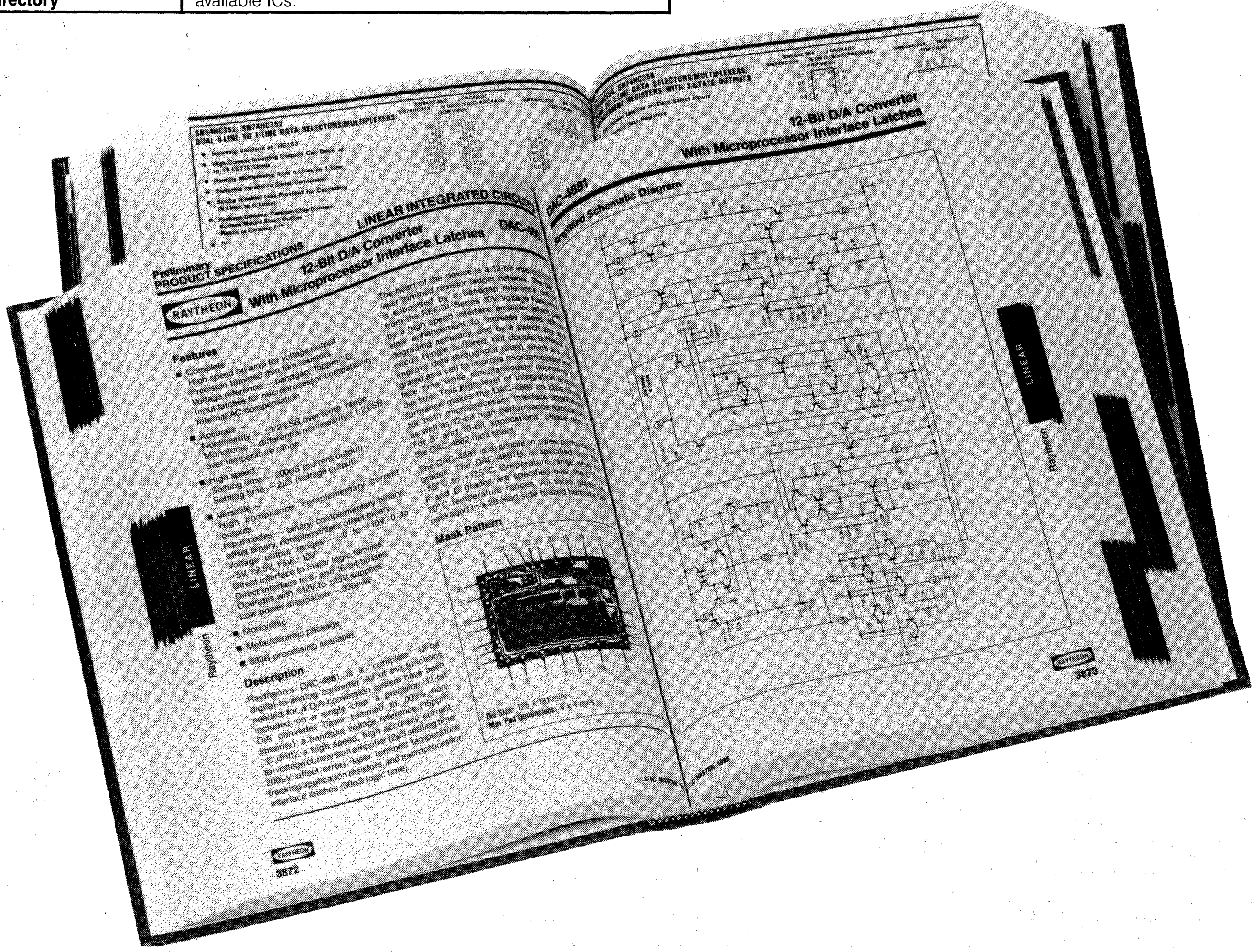
LINEAR INTEGRATED CIRCUITS
Preliminary PRODUCT SPECIFICATIONS
12-Bit D/A Converter With Microprocessor Interface Latches
RAYTHEON
DAC-4881
Features
Description
Mask Pattern
Simplified Schematic Diagram
LINEAR
Raytheon
3872
3873

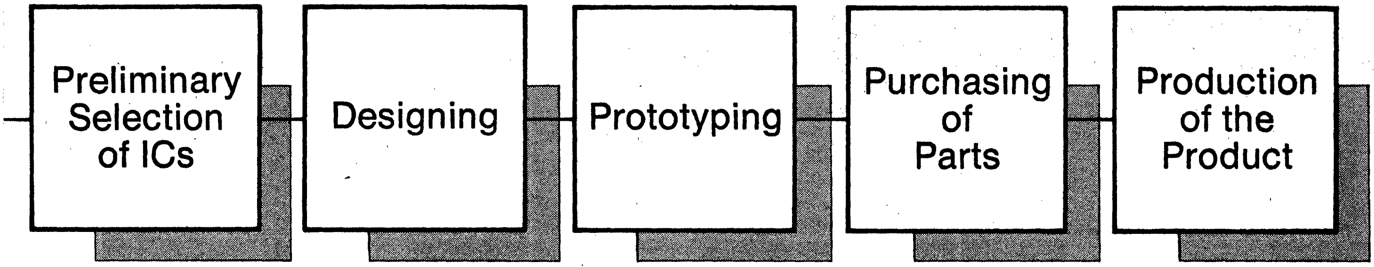

is “mastered” early.

The best time for an engineer to pick the integrated circuits that will go into his next design is at an early stage in the design process when the engineer's plans are still flexible enough to take full advantage of the features selected.

There is a point in the early phases of every design when engineers focus on selecting integrated circuits. They examine specifications, weigh relative strengths and weaknesses of various devices, and choose the field of candidates. This critical time in the design cycle when designers want to be sure the right devices are in serious contention for their applications.

This is when the engineer reaches into his technical reference library. Of the material on his shelves, **IC MASTER** is the only reference source that has been especially prepared for this moment.

The engineer can look up each precise function that he needs and see all of the devices—and their manufacturers—that might satisfy his requirements. He sees this information for all manufacturers, not just for advertisers. But if an IC maker has chosen to include technical data for his products in **IC MASTER**, the engineer sees each index listing for that manufacturer in **bold face type** accompanied by the **page number** on which the data appears; the engineer can then turn immediately to the advertiser's technical data to see if the device fits his needs.

Next time, begin with the MASTER...where engineering design begins!

IC MASTER

WHAT'S NEW IN IC MASTER

DON'T MISS THE EXPANDED CUSTOM/ SEMICUSTOM IC SECTION

Lists software design tools available for Programmable Logic Devices, Gate Arrays, Standard Cells, and Linear and Linear/ Digital Arrays. Major macros in VLSI/LSI Macrocell Libraries are listed by source.

Volume II, page 4401

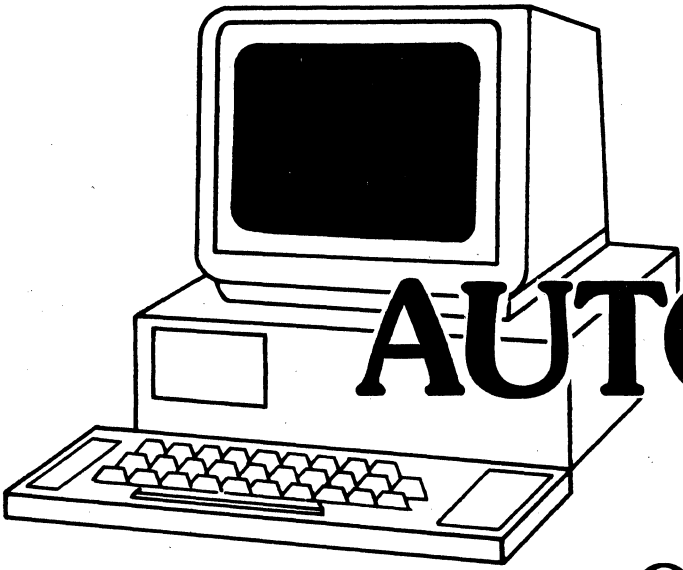

DON'T MISS THE NEW DESIGN AUTOMATION IC SECTION

Quick and easy way to determine relationships between workstations, computers, software, semicustom manufacturers and CAE/CAD providers.

Volume II, page 4901

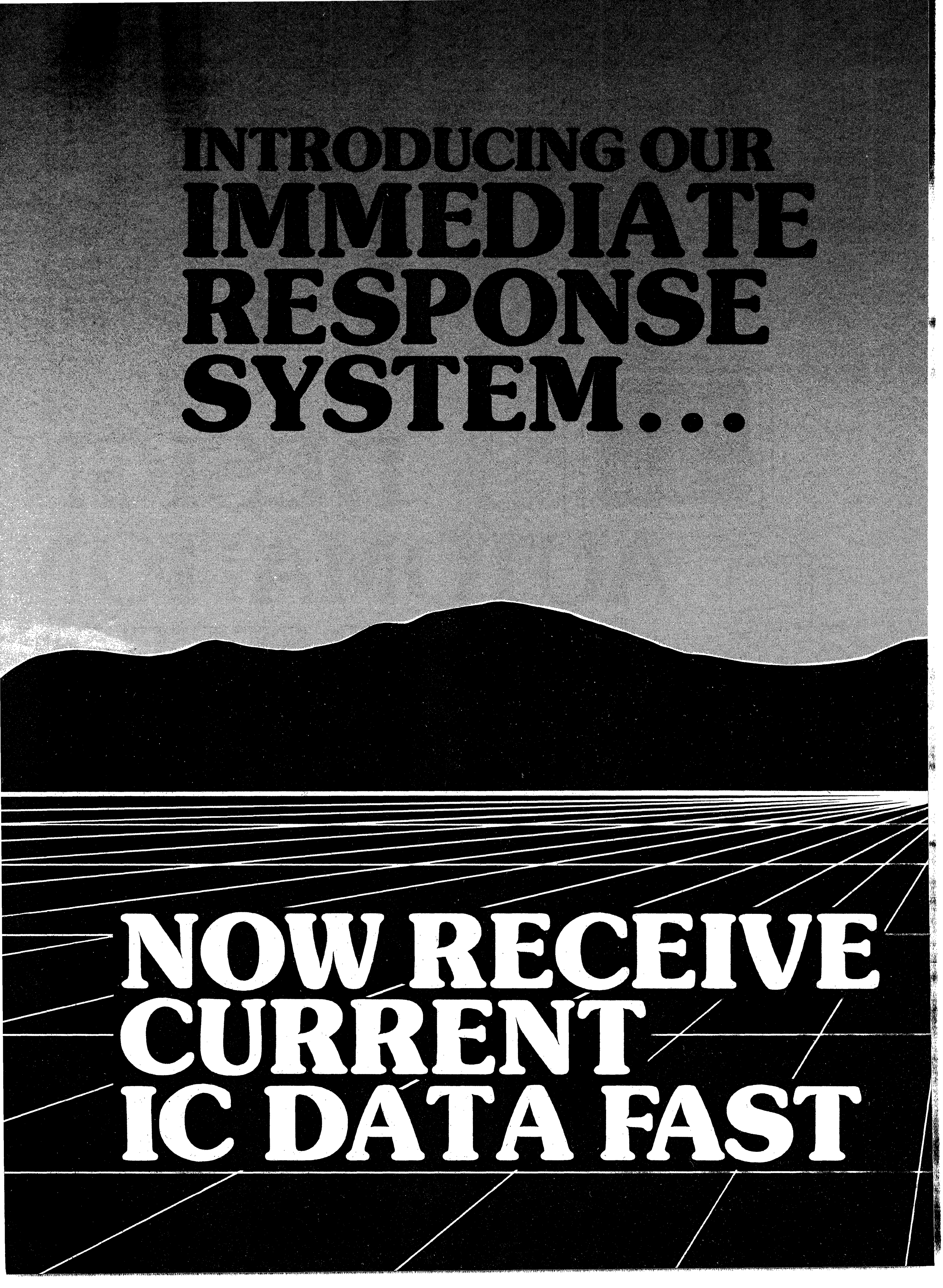
INTRODUCING OUR
IMMEDIATE
RESPONSE
SYSTEM...
NOW RECEIVE
CURRENT
IC DATA FAST

Dear IC MASTER User:

ANNOUNCING: A new, innovative way to request and receive up-to-date IC product data.

The IC MASTER introduces an IMMEDIATE response system. Operational **24 hours a day, 7 days a week,** you can now phone in your requests for the most current IC product data available from IC manufacturers who have product data sheets in the IC MASTER, at no cost to you. Here's all you do:

Step 1 **Phone 800-443-0100** and ask for Extention #518

Step 2 When asked, simply tell the operator the name(s) of the manufacturer whose part you are interested in . . . the **specific** part number you want information on . . . if you want a data sheet and/or an application note . . . and if you want a salesperson to call.

Step 3 Provide you name, title, company, address, and phone number.

That's all you do! We do the rest. Your request will be in the hands of the company you inquired about within 24 hours.

We will follow up within a week to make sure your request was expedited and your needs were met.

It's important to us that we provide you with the best source of up-to-date IC product data available in the market . . . we've been doing it for over ten years, and we aren't stopping now.

We hope this **added new** service will contribute to a further reduction in your IC selection time.

call 800-443-0100 518 (ext.)

WHAT'S NEW IN IC MASTER

DON'T MISS THE NEW DIGITAL SIGNAL PROCESSING IC SECTION

Easy to find DSP
devices.

Volume I, Page 801

IS THIS A BORROWED COPY?

Avoid the hassle and order your own personal two-volume set of IC MASTER. It's the surest way to simplify your IC selection efforts.

Only IC MASTER allows you to examine and compare the specifications, relative strengths, and weaknesses of all devices in serious contention for your application. And only IC MASTER brings you actual manufacturers' data sheets, allowing you to make complete and definitive device selections.

You can order IC MASTER simply by charging it to your VISA or Master Card credit card. To place your order (USA only) call now: (408) 249-6800/(516) 227-1300. To order outside the USA, see list of authorized IC MASTER distributors on page 1471 of Vol. I.

WHAT'S NEW IN IC MASTER

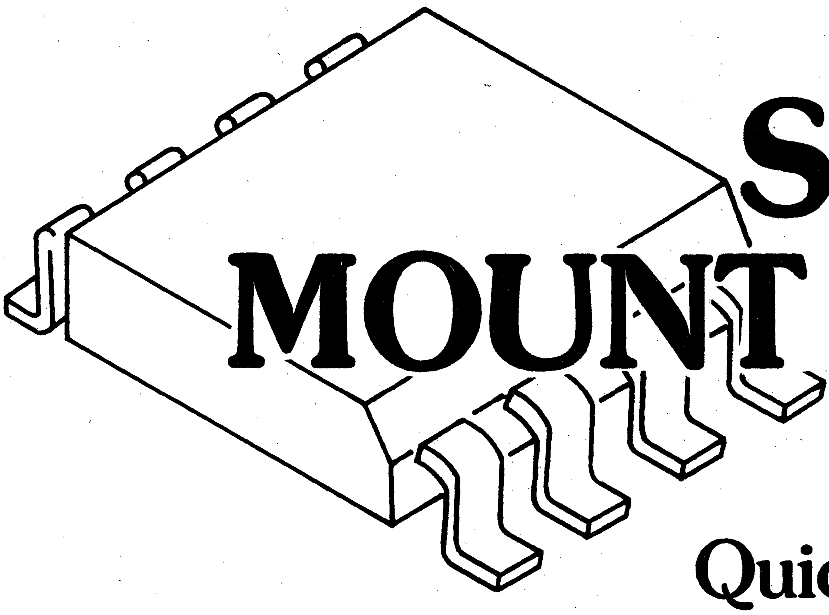

DON'T MISS THE NEW SURFACE MOUNT DEVICE IC SECTION

Quickly shows you by base number and package, what surface mount devices are available and from which manufacturers.

Volume II, Page 5201

NEED MORE PRODUCT DETAILS?

Use the IC MASTER's NEW Telemarketing response system to request additional product information from IC manufacturers and CAE/CAD providers. CALL **800 443-0100 (EXT.) 518**

48 hour turn-around on your request . . . 24 hours a day, 7 days a week service.

ABBREVIATIONS OF COMPANY NAMES

ACASI	American Computer Automated Systems
Acco	Acco Babcock
ACE	Action Computer Enterprise
Acotech	Acotech
AD	Analog Devices
AdvDigital	Advanced Digital Corp.
AdvEngSol	Advanced Engineering Solutions
Aldec	Aldec
AllenSys	Allen Systems
Alphatron	Alphatron
Altera	Altera
AMA	American Automation
AMCC	Applied Micro Circuits
AMD	Advanced Micro Devices
Amperex	Amperex Electronic Corp.
Ampro	Ampro Computers Inc.
AnalDesTools	Analog Design Tools
AnalogSys	Analog Systems
Analogic	Analogic
Apex	Apex Microtechnology
Applicon	Applicon
AppBusComp	Applied Business Computer
AppMicroSys	Applied Microsystems Corp.
ApplSys	Applied Systems Corp.
Aptek	Aptek Microsystems
ArrayTech	Array Technology
ASEA-HAFO	ASEA-HAFO
AsstTech	Assisted Technology
Astraea	Astraea Computer Corp.
AT&T	AT&T Technology Systems
Augat	Augat, Inc. Systems Div.
AutoSys	Automated Systems Inc.
Barvon	Barvon Research
Basicon	Basicon Inc.
Beckman	Beckman
Bedford	Bedford Control Systems Inc.
BinaryTech	Binary Technology
Brachman	Brachman, R. J.
Brooktree	Brooktree
Burr-Brown	Burr-Brown Corporation
Cadam	Cadam
Cadnetix	Cadnetix
CAE	CAE Systems, Div. of Tektronix
CAECO	CAECO
Caedent	Caedent
Calay	Calay Systems
CalDevices	California Devices
Callen	Callen Data Systems
Calma	Calma
Calmos	Calmos Systems
Calos	Calos
Cambridge	Cambridge Digital Systems
CaseTech	Case Technology
CentData	Central Data Corp.
Century	Century Computer Corp.
Cericor	Cericor
Cermetek	Cermetek Microelectronics
CGRS	CGRS Microtech Inc.
Chancellor	Chancellor Computer
CharlesRiver	Charles River Data Systems
Cherry	Cherry Semiconductor
Chips&Tech	Chips & Technology
Chrislin	Chrislin Industries
CIC	Custom Integrated Circuits
Cirrus	Cirrus Logic
Citel	Citel Inc.
CMCIntl	CMC International
Codata	Codata Systems Corp.
Comark	Comark Corp.
Comlinear	Comlinear Corporation
Compupro	Compupro
CompAuto	Computer Automation
CompVision	Computervision
ConnMicro	Connecticut MicroComputer
ControlData	Control Data
ContLogic	Control Logic Inc.
ControlSys	Control Systems Microsystems Div.
Cortex	Cortex Research
CreMicro	Creative Micro Systems
Cromemco	Cromemco, Inc.
CSG	Commodore Semiconductor Group
CTI	Circuit Technology Inc.
Cubit	Cubit Inc.
Cybernetic	Cybernetic Micro Systems
Cybersys	Cybersystems
Cypress	Cypress Semiconductor
Daisy	Daisy Systems
Dasoft	Dasoft Design Systems
Data I/O	Data I/O
DataTrans	Data Translation
Datel	Datel
Datricon	Datricon Corporation
Davidge	Davidge Corp.
DDC	Data Device Corporation
DEC	Digital Equipment Corp.
Dense-Pac	Dense-Pac Microsystems
Dexter	Dexter Research Center
Digitek	Digitek, Inc.
Dionics	Dionics Inc.
DIR-AdvTech	DIR Advanced Technology
DistComp	Distributed Computer Systems
DiversTech	Diversified Technology
DraftingDyn	Drafting Dynamics
DY-4	DY-4 Systems Inc.
DYSYS	DYSYS Inc.
ECAD	ECAD
EES	Electrical Engineering Software
EEsof	EEsof Inc.
Elantec	Elantec
Eltec	Eltec Microsystems
Emulogic	Emulogic
EnergySci	Energy Sciences
Enterprise	Enterprise Systems
ESP	Electronic Software Products
ETIMicro	ETI Micro
Exar	Exar Corporation
EXEL	EXEL Microelectronics
Factron	Factron-EDA
Fairchild	Fairchild Semiconductor
Faraday	Faraday Electronics
Ferranti	Ferranti Electric
Force	Force Computers
FujitsuA	Fujitsu America
Fujitsu	Fujitsu Microelectronics, Inc.
FutureNet	FutureNet
Galil	Galil Motion Control
Gateway	Gateway Designs Automation
GE Semi	GE Semiconductor
GenMicro	General Microsystems
Genrad	Genrad
Gerber	Gerber Scientific Instrument
GI	General Instrument
GigaBit	GigaBit Logic
Golden	Golden Electronics
Goldstar	Gold Star
GouldAMI	Gould AMI Semiconductors
GTEMicro	GTE Microcircuits
Harris	Harris Semiconductor
Heurikon	Heurikon Corp.
HHB-Sys	HHB Softron Systems
HiLevel	Hi-Level Technology
Hitachi	Hitachi America, Ltd.
Holt	Holt Inc.
Honeywell	Honeywell Digital Product Center
HoneywellSPT	Honeywell Signal Processing Technologies
HP	Hewlett-Packard
Hughes	Hughes Aircraft, Solid State Products
HybridSys	Hybrid Systems
HyComp	Hy Comp
Hytek	Hytek Microsystems
Hyundai	Hyundai Electronics America
IBM	IBM
ICC	International Cybernetics
ICDC	Integrated Circuit Design Centre
ICI	Integrated Circuits Inc.
ICT	International CMOS Technology
IDT	Integrated Device Technology
iLSi	Integrated Logic Systems
IMI	International Microcircuits, Inc.
IMP	International Microelectronic Products
IndComp	Industrial Computer Designs
Inmos	Inmos Corporation
InnovRes	Innovative Research
InrVision	Innervision
IntCirSys	Integrated Circuit Systems
Intech	Intech Microcircuits Division
Intel	Intel
Intelicom	Intelicom Systems Ltd.
IntelComp	Intelligent Computer Integration
InterconMicro	Intercontinental Micro Systems
Interdesign	Ferranti Interdesign
Intergraph	Intergraph
Intersil	Intersil
IntMeasSys	Integrated Measurement Systems
IntMicCir	Integrated Microcircuits
IntlMicSys	International Microsystems
Intronics	Intronics
IntSolutions	Integrated Solutions
Intech	Integrated Technology
IPS	Integrated Power Semiconductors
Ironics	Ironics Inc.
ITT	ITT Semiconductors
IXYS	IXYS Corp.
KineticSys	Kinetic Systems
Kontron	Kontron Electronics
Lambda	Lambda Semiconductors
Lattice	Lattice Semiconductor
LinearTech	Linear Technology Corp.
LMS	LMS Electronics
LogicDev	Logic Devices Inc.
LogicalDes	Logical Design Group
Logicraft	Logicraft Inc.
Lomas	Lomas Data Products, Inc.
LPKF-Pacific	LPKF-Pacific
LSIComp	LSI Computer Systems

LSILogic	LSI Logic
LSIProd	LSI Productions
LTI	Linear Technology Inc.
MasterLogic	Master Logic Corporation
Matra	Matra Design Systems
Matrix	Matrix Corp.
Matrox	Matrox Electronic Systems
Maxim	Maxim Integrated Products
MCC	Micro Computer Control
MCE	MCE Semiconductor
Mentor	Mentor Graphics
MetaSoft	Meta Software
Micra	Micra Corp.
Micrel	Micrel
Microbar	Microbar Systems, Inc.
MicroCompSys	Microcomputer Systems
MicroDesigns	Microdesigns
MicroInds	Micro Industries Corp.
MicroInnov	Micro Innovators
MicroLinear	Micro Linear
Microlog	Microlog, Inc.
MicroNet	Micro Networks
MicronTech	Micron Technology
Micropac	Micropac Industries
MicroPwr	Micro Power Systems
MicroSci	Micro Sciences
Micro-Link	Micro-Link Corporation
Micro-Rel	Micro-Rel
Microsim	Microsim
MicroSys	Micro/Sys
MicroTech	Microcircuits Technology
Mikros	Mikros Systems Corp.
MilerTron	MilerTronics
Miller	Miller Technology
Mitchell	Mitchell Electronics
Mitel	Mitel Semiconductor
Mitsubishi	Mitsubishi Electronics America, Inc.
MMI	Monolithic Memories, Inc.
MonSys	Monolithic Systems Corp.
Mosaid	Mosaid
Mostek	Mostek
Motorola	Motorola Semiconductor Products
MRCSys	MRC Systems
Multiwire	Multiwire, Div. Kollmorgen
National	National Semiconductor
NCA	NCA
NCM	NCM Corporation
NCR	NCR Corp., Microelectronics Div.
NEC	NEC Electronics
Octagon	Octagon Systems Corp.
Octal	Octal
OEI	Optical Electronics Inc.
OhioSci	Ohio Scientific
OKI	OKI Semiconductor
Omnibyte	Omnibye Corp.
Omnicad	OMNICAD
Onset	Onset Computer Corp.
Orion	Orion Instruments
PacificM	Pacific Microcircuits
Pacific	Pacific Microcomputers, Inc.
Panasonic	Panasonic
Panatech	Panatech Semiconductor
Paragon	Paragon Technology
PCAD	Personal CAD Systems
Philips	Philips
Phoenix	Phoenix Data Systems
PicoDesign	Pico Design
PlesseyMicro	Plessey Microsystems
Plessey	Plessey Solid State
PMI	Precision Monolithics Inc.
Polycore	Polycore Electronics
Pro-Log	Pro-Log Corp.
ProtoCAD	ProtoCAD
Proximity	Proximity
QC Graphics	QC Graphics, Inc.
Quantic	Quantic Laboratories, Inc.
Quay	Quay Corp.
RACAL	RACAL-REDAC
Raytheon	Raytheon Semiconductor
RCA	RCA Solid State Division
RCIData	RCI Data
RELMS	Relational Memory Systems
Reticon	Reticon
RIFA	RIFA
Rockwell	Rockwell Semiconductor Products
Rohm	Rohm
RTC	Riehl Time Corporation
S-MOS	S-MOS Systems
Sahni	Sahni Corporation
Samsung	Samsung Semiconductor
Sanyo	Sanyo Semiconductor
SBE	SBE, Inc.
SciCalc	Scientific Calculations
SDA-Systems	SDA Systems
SEEQ	SEEQ Technology, Inc.
SESCO	Severe Environmental Systems Corp.
SGS	SGS Semiconductor
Sharp	Sharp
Shiva	Shiva Multisystems
SiCompilers	Silicon Compilers
SiDesignLabs	Silicon Design Labs
Siemens	Siemens
Sierra	Sierra Semiconductor
Si-Fab	Si-Fab
Signetics	Signetics
SiliconG	Silicon General
SiliconSol	Silicon Solutions
SiliconSys	Silicon Systems Inc.
Siliconix	Siliconix
Siltronics	Siltronics
SilvarLisco	Silvar-Lisco
Simucad	Simucad
SingleBoard	Single Board Solutions
Slicer	Slicer Computers Inc.
SMC	Standard Microsystems Corporation
Solarcom	Solarcom Teechnology Inc.
Solarise	Solarise Enterprises Inc.
Solitron	Solitron Devices
Spectrum	Spectrum Software
SPI	Semi Processes Inc.
Sprague	Sprague Electric Company
SSM	Solid State Micro Technology for Music
SSS	Sprague Solid State
STC	STC Microtechnology
STDMicro	STD Microsystems
STI	Stanford Telecommunications
StorageTech	Storage Technology
Stynetic	Stynetic Systems
Sunshine	Sunshine Semiconductor
Supertex	Supertex Inc.
Synergy	Synergy Microsystems
Tangent	Tangent Systems Corp.
Tatum	Tatum Labs
TauZero	Tau Zero Inc.
Technitrol	Technitrol
Techno	Techno Inc.
Tektronix	Tektronix
TeledyneC	Teledyne Crystalonics
TeledyneM	Teledyne Microelectronics
TeledyneP	Teledyne Philbrick
TeledyneS	Teledyne Semiconductor
Telefunken	Telefunken
Telesis	Telesis Systems
Teletek	Teletek Enterprises
Telmos	Telmos
Teltone	Teltone Corporation
Teradyne	Teradyne
ThirdDomain	Third Domain
ThomsonCSF	Thomson-CSF Components
TI	Texas Instruments
TLSI	TLSI, Inc.
Toko	Toko America
Torric	Torric Corporation
Toshiba	Toshiba America
TriQuint	TriQuint
TRW-LSI	TRW LSI Products
TRW-Semi	TRW Semiconductors
UCBerkeley	University California Berkeley
UMC	United Microelectronics Corp.
Unicorn	Unicorn Microelectronics
Unitrode	Unitrode
Universal	Universal Semiconductor, Inc.
Valid	Valid Systems
ValleyData	Valley Data Sciences
VAMP	VAMP
Vatic	Vatic Systems Inc.
Vectron	Vectron Graphics Systems
Versatec	Versatec, Xerox
VersaLogic	Versatile Logic Systems
Vesta	Vesta Technology
VIA-Systems	VIA Systems
Viasyn	Viasyn
ViewLogic	View Logic Systems
VisionsUnlim	Visions Un-limited
Vitesse	Vitesse Electronics
VLSIDesign	VLSI Design Associates
VTC	VTC
VTI	VLSI Technology Inc.
Votrax	Votrax
Waferscale	Waferscale Integration Inc.
WDC	Western Design Center
Weitek	Weitek Corporation
Western	Western Digital
WinSystems	WinSystems Inc.
Wintek	Wintek Corp.
Xicor	Xicor
Xycom	Xycom
Xylogics	Xylogics, Inc.
Zendex	Zendex Corp.
Ziatech	Ziatech Corporation
Zilog	Zilog
Zuken	Zuken America
Zycad	Zycad
ZyMOS	ZyMOS
Zytrex	Zytrex Corp.

WHAT'S NEW IN IC Updates

IF YOU NEED THE IC MASTER YOU NEED THE IC UPDATES

Not only will the IC UPDATES update your IC Master Catalog they will provide valuable IC application and selection information in every issue

SPRING, SUMMER and FALL

and remember our toll free number for up-to-date product information: **800 443-0100 (EXT.) 518**

IS THIS A BORROWED COPY?

Avoid the hassle and order your own personal two-volume set of IC MASTER. It's the surest way to simplify your IC selection efforts.

Only IC MASTER allows you to examine and compare the specifications, relative strengths, and weaknesses of all devices in serious contention for your application. And only IC MASTER brings you actual manufacturers' data sheets, allowing you to make complete and definitive device selections.

You can order IC MASTER simply by charging it to your VISA or Master Card credit card.
To place your order (USA only)
call now: (408) 249-6800/(516) 227-1300.
To order outside the USA,
see list of authorized IC MASTER
distributors on page 1471 of Vol. I.

ANALOG DEVICES

IEEE Floating Point Multiplier

ADSP-3210

FEATURES

Fully Compatible with IEEE Standard 754
Three Data Formats:
- **32-Bit Single Precision Floating Point**
- **64-Bit Double Precision Floating Point**
- **32-Bit Fixed Point**

High Speed:
- **Single Precision Throughput of 100ns/10 MEGAFLOPS**
- **Double Precision Throughput of 400ns/2.5 MEGAFLOPS**
- **Fixed Point Throughput of 100ns/10MHz**

Two-Port Structure Supports Full Data Transfer Rate
One Internal Pipeline Stage
Low-Power CMOS Technology
- **400mW Max Power Dissipation**

Fully Registered I/O and Controls
Three-State Outputs with Separate Enables
100-Lead Pin Grid Array

ADSP-3210 IEEE FLOATING POINT MULTIPLIER

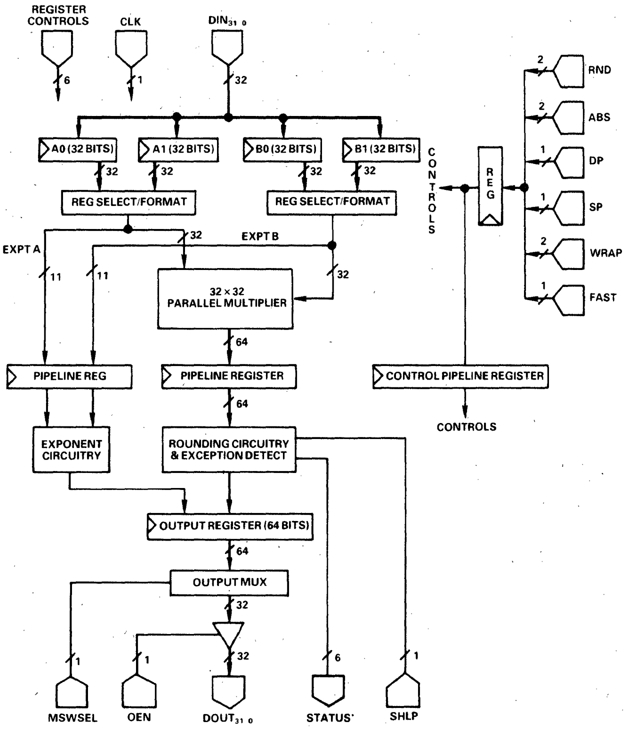
REGISTER CONTROLS
CLK
DIN31-0
6
1
32
A0 (32 BITS)
A1 (32 BITS)
B0 (32 BITS)
B1 (32 BITS)
32
32
32
32
REG SELECT/FORMAT
REG SELECT/FORMAT
CONTROLS
REG
RND
ABS
DP
SP
WRAP
FAST
2
2
1
1
2
1
EXPT A
EXPT B
32
11
11
32
32 × 32 PARALLEL MULTIPLIER
64
PIPELINE REG
PIPELINE REGISTER
CONTROL PIPELINE REGISTER
64
CONTROLS
EXPONENT CIRCUITRY
ROUNDING CIRCUITRY & EXCEPTION DETECT
OUTPUT REGISTER (64 BITS)
64
OUTPUT MUX
32
32
1
1
6
1
MSWSEL
OEN
DOUT31-0
STATUS
SHLP

GENERAL DESCRIPTION

The ADSP-3210 is a high-speed floating point multiplier. The ADSP-3210 and its companion ALU, the ADSP-3220 are basic building blocks for high-speed numerical processors. These devices offer a full set of operations on three data formats: 32-bit single-precision floating point, 64-bit double-precision floating point, and 32-bit two's complement fixed point.

Fabricated in 1.5 micron CMOS, the ADSP-3210 provides a high-speed, low-power solution to floating point multiplication requirements. Pipelined results are produced every 100ns for single precision floating point and fixed point data formats. The direct operand feed mode allows a low total latency of 310ns[1]. Pipelined double precision floating point results are produced every 400ns. Maximum power dissipation is less than 400mW, worst case.

The ADSP-3210's data formats and floating point operations conform to the proposed IEEE Standard 754. The ADSP-3210 supports all four rounding modes in the standard for all three data formats. All four exception conditions—overflow, underflow, invalid operation, and inexact result—are flagged by dedicated status pins.

The ADSP-3210 has a two-port structure: one 32-bit input port and one 32-bit output port. Two 32-bit registers are available for each of the A and B operands. Data inputs and outputs transfer at twice the cycle rate, allowing two 32-bit input operations and one 64-bit output operation on every cycle. All inputs and outputs are registered.

The ADSP-3210 is available for both commercial and military temperature ranges. Extended temperature range parts are available with high-reliability processing ("PLUS" parts). MIL-grade parts are available processed fully to MIL-STD-883, Class B.

---

[1] **Data setup + processing + output delay of most significant output word.**

ORDERING INFORMATION

ADSP-3210TG/883B
- Processing
- Package
- Performance, Temp. Range
- Part Number
- Analog Devices Digital Signal Processing

Package
G – Pin Grid Array

Processing
Blank – Standard
+ – High Reliability
883B – MIL-STD-883

Performance/ Temperature
J – Standard, 0 to +70°C
K – High Speed, 0 to +70°C
S – Standard, −55°C to +125°C
T – High Speed, −55°C to +125°C

TWO TECHNOLOGY WAY • P.O. BOX 280 • NORWOOD, MA 02062 • (617) 329-4700

ANALOG DEVICES

IEEE Floating Point ALU

ADSP-3220

FEATURES

Fully Compatible with IEEE Standard 754
Three Data Formats:
- **32-Bit Single Precision Floating Point**
- **64-Bit Double Precision Floating Point**
- **32-Bit Fixed Point**

Three Classes of Operations:
- **Arithmetic**
- **Logical – Negate, AND, OR, XOR, Pass, Clear**
- **Data Conversion – Between All Formats**

Performs Operations on Denormalized Numbers
High Speed: 10MHz Throughput for All Operations on All Data Formats
Three-Port Structure Supports Full Data Transfer Rate
One Internal Pipeline Stage
Low-Power CMOS Technology
- **400mW Max Power Dissipation**

Fully Registered I/O and Controls
Three-State Outputs with Separate Enables
144-Lead Pin Grid Array

GENERAL DESCRIPTION

The ADSP-3220 is a floating point ALU with a full complement of arithmetic, logical and data conversion operations. The ADSP-3220 and its companion multiplier, the ADSP-3210, are basic building blocks for high-speed numerical processors with operations on three data formats: 32-bit single-precision floating point, 64-bit double-precision floating point, and 32-bit two's complement fixed point.

Fabricated in 1.5 micron CMOS, the ADSP-3220 provides a high-speed, low-power solution to floating point processing requirements. Pipelined results of all operations are produced every 100ns for all data formats. The direct operand feed mode allows a low total latency of 260ns[1]. Maximum power dissipation is less than 400mW, worst case.

The ADSP-3220's data formats and floating point operations conform to the proposed IEEE Standard 754. The ADSP-3220 supports all four rounding modes in the standard for all three data formats. All four exception conditions—overflow, underflow, invalid operation, and inexact result—are flagged by dedicated status pins.

ADSP-3220 FLOATING POINT ALU

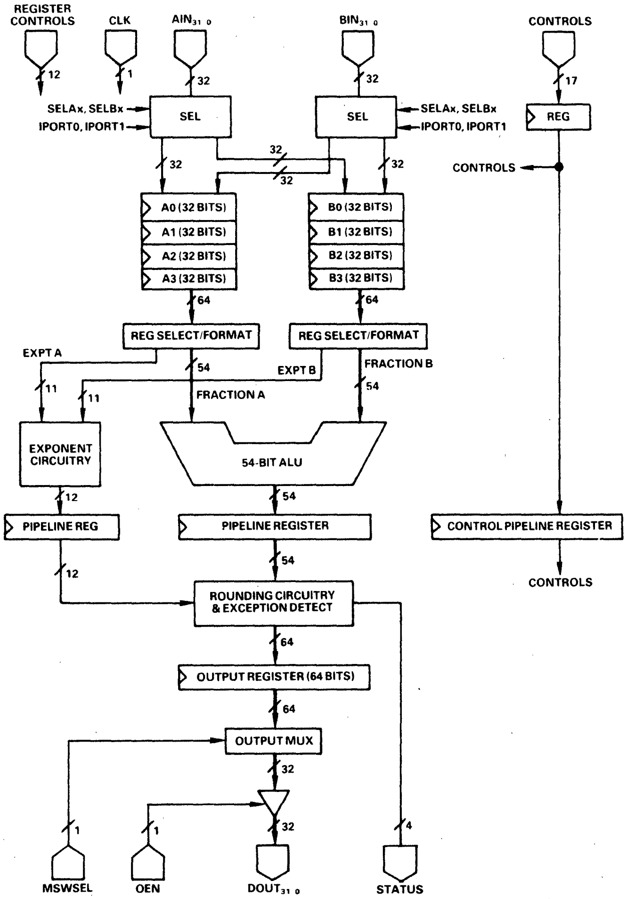
REGISTER CONTROLS
CLK
AIN_{31-0}
BIN_{31-0}
CONTROLS
12
1
32
32
17
SELAx, SELBx
IPORT0, IPORT1
SEL
SEL
SELAx, SELBx
IPORT0, IPORT1
REG
32
32
32
32
CONTROLS
A0 (32 BITS)
A1 (32 BITS)
A2 (32 BITS)
A3 (32 BITS)
B0 (32 BITS)
B1 (32 BITS)
B2 (32 BITS)
B3 (32 BITS)
64
64
REG SELECT/FORMAT
REG SELECT/FORMAT
EXPT A
54
EXPT B
FRACTION B
11
11
FRACTION A
54
EXPONENT CIRCUITRY
54-BIT ALU
12
54
PIPELINE REG
PIPELINE REGISTER
CONTROL PIPELINE REGISTER
12
54
CONTROLS
ROUNDING CIRCUITRY & EXCEPTION DETECT
64
OUTPUT REGISTER (64 BITS)
64
OUTPUT MUX
32
1
1
32
4
MSWSEL
OEN
$DOUT_{31-0}$
STATUS

The ADSP-3220's three-port structure accommodates the full 10 MEGAFLOPS throughput rate for double precision operations, loading two 64-bit operands on each cycle and operating internally with 64-bit wide data paths. Four input registers are available for each of the A and B operands. Each input port can load any of the eight input registers, allowing the ADSP-3220 to be configured with one input port.

The ADSP-3220 is available for both commercial and military temperature ranges. Extended temperature range parts are available with high-reliability processing ("PLUS" parts). MIL-grade parts are available processed fully to MIL-STD-883, Class B.

---

[1] **Data setup + processing + output delay of most significant output word.**

ORDERING INFORMATION

ADSP-3220TG/883B — Processing
— Package
— Performance, Temp. Range
— Part Number
— Analog Devices Digital Signal Processing

Package
G – Pin Grid Array

Processing
Blank – Standard
+ – High Reliability
883B – MIL-STD-883

Performance/ Temperature
J – Standard, 0 to +70°C
K – High Speed, 0 to +70°C
S – Standard, −55°C to +125°C
T – High Speed, −55°C to +125°C

TWO TECHNOLOGY WAY • P.O. BOX 280 • NORWOOD, MA 02062 • (617) 329-4700

ANALOG DEVICES

Program Sequencer

ADSP-1401

FEATURES
- **16-Bit Addressing Capability**
- **Look-Ahead™ Pipeline**
- **Extensive Interrupt Handling**
  - **Ten On-Chip Interrupt Vectors**
- **70ns Cycle Time**
- **35ns Clock-to-Address Delay**
- **64-Word RAM for Storing**
  - **Subroutine Linkage**
  - **Jump Addresses**
  - **Counters**
  - **Status Register**
- **Low-Power CMOS Technology**
  - **150mW Max Power Dissipation**
- **48-Pin DIP (Ceramic or Low-Cost Plastic)**

GENERAL DESCRIPTION

The ADSP-1401 is a high-speed microprogram controller optimized for the demanding sequencing tasks found in digital signal processors and general purpose computers (e.g. looping, jumping, branching, subroutines, condition testing and interrupts). In addition to high speed and large addressing range, it has unique features that make it highly versatile:

- on-chip control of ten prioritized and maskable interrupts
- four decrementing event counters
- absolute, relative and indirect addressing capability
- download capability (writeable control store)
- a dynamically configurable 64-word RAM.

During each micro-instruction, the ADSP-1401 monitors status indicators and the current instruction to determine the next microprogram address. This address can come from one of several sources: the stack, the jump address space in the RAM, the data port, the interrupt vectors, or the microprogram counter. An extensive set of conditional instructions is available, including jumps, branches, subroutines, interrupts, and writeable control store.

The ADSP-1401's internal 64-word RAM is used for interrupt and subroutine linkage via the stack. It also provides the ability to associate counters, jump addresses, and the status register with nested interrupts and subroutines.

ADSP-1401 PROGRAM SEQUENCER

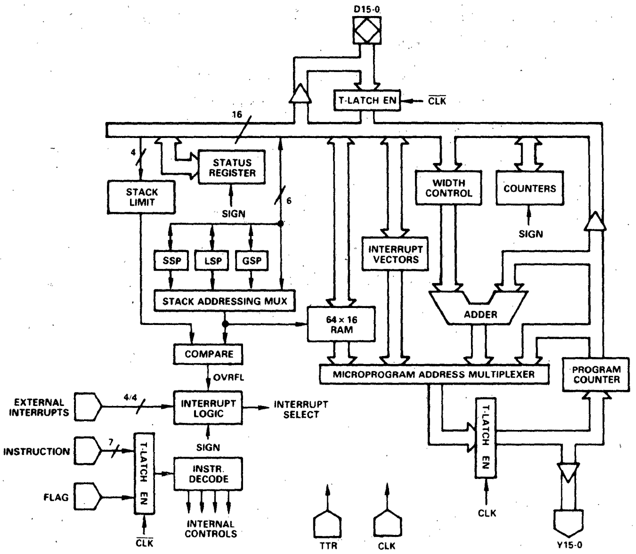

Interrupts are handled entirely on chip. The ADSP-1401's internal interrupt control logic includes registers for eight external interrupt vectors, a mask register, and a priority decoder. Two additional vectors are reserved for internally-generated interrupts resulting from counter underflow and stack limit violation.

The ADSP-1401's four decrementing 16-bit counters are used to track loops and events. These counters are referenced by several conditional instructions and can also trigger an internal interrupt.

The ADSP-1401's Look-Ahead™ pipeline eliminates the need for an external microcode pipeline register by internally latching instructions and addresses. A complementary latching arrangement allows a new instruction to be decoded (in preparation for the following cycle) while the program memory address for the current cycle is held constant.

The ADSP-1401 is available for both commercial and military temperature ranges. Extended temperature range parts are available with high-reliability processing ("PLUS" parts). MIL-grade parts are available processed fully to MIL-STD-883, Class B. Packaging options include a 48-pin ceramic DIP and a low-cost 48-pin plastic DIP.

ORDERING INFORMATION

ADSP-1401TD/883B — Processing
Package
Performance, Temp. Range
Part Number
Analog Devices Digital Signal Processing

Package
D – Ceramic DIP
N – Plastic DIP

Processing
Blank – Standard
+ – High Reliability
883B – MIL-STD-883

Performance/ Temperature
J – Standard, 0 to + 70°C
K – High Speed, 0 to + 70°C
S – Standard, – 55°C to + 125°C
T – High Speed, – 55°C to + 125°C

TWO TECHNOLOGY WAY • P.O. BOX 280 • NORWOOD, MA 02062 • (617) 329-4700

FOR COMPLETE DATA SHEET, Call 800-443-0100, Ext. 518

ANALOG DEVICES

Address Generator

ADSP-1410

FEATURES

16-Bit Addresses with Higher Precision Options
Look-Ahead™ Pipeline
80ns Cycle Time
20ns Clock-to-Address Delay
Versatile Addressing Hardware:
  30 16-Bit Registers
  16-Bit ALU with Left/Right Shift & Carry I/O
  Comparator
  Bit Reverser
Dual Ports
Powerful Single-Cycle Looping Instructions
Low-Power CMOS Technology
  175mW Max Power Dissipation
48-Pin DIP (Ceramic or Low-Cost Plastic)

GENERAL INFORMATION

The ADSP-1410 is a fast, flexible address generator optimized for digital signal processors and general purpose computers. This low-power CMOS device rapidly generates the data memory addresses required by routines such as digital filters, FFTs, matrix operations, and DMAs.

The ADSP-1410's 10-bit microcode instructions include commands for looping, register read/writes, internal data transfers, and logical/shift operations. An internal Alternate Instruction Register (AIR) can also provide the instruction under external control, allowing microcode to be conserved in many applications.

In a single instruction cycle, the ADSP-1410 can:

- output a 16-bit memory address
- modify this memory address
- conditionally reinitialize the address based on a comparison with a preset value.

Consequently, circular buffers and modulo addressing of data memories can be implemented without overhead.

The ADSP-1410's architecture features a 16-bit ALU, a comparator, and 30 16-bit registers. The registers are organized into four files: sixteen address registers, six offset registers, four compare registers, and four initialization registers.

The ADSP-1410 has a 16-bit address (Y) port for outputting addresses and a 16-bit data (D) port for I/O between internal and external registers. A value provided by the data port may serve as an input to the 1410's ALU or may be directly output over the address port.

The ADSP-1410's Look-Ahead™ pipeline eliminates the need for an external microcode pipeline register by internally latching instructions and addresses. A complementary latching arrangement allows a new instruction to be decoded (in preparation for the following cycle) while the data memory address for the current cycle is held constant.

Double-precision (30-bit), single-cycle addressing can be performed by cascading two ADSP-1410's. Alternatively, a single ADSP-1410 can provide one double-precision address every two clock cycles.

ADSP-1410 ADDRESS GENERATOR

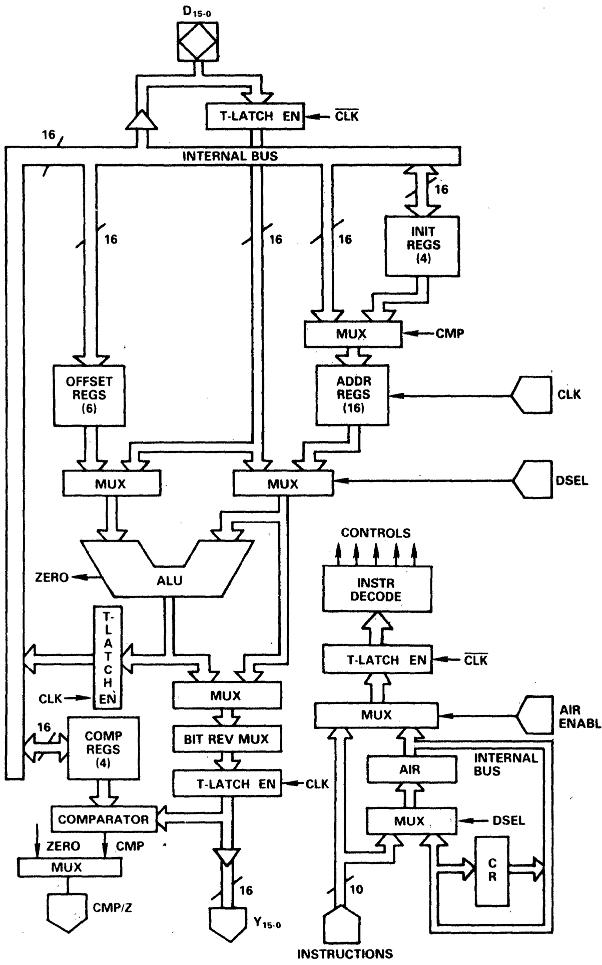

The ADSP-1410 is available for both commercial and military temperature ranges. Extended temperature range parts are available with high-reliability processing ("PLUS" parts). MIL-grade parts are available processed fully to MIL-STD-883, Class B. Packaging options include a 48-pin ceramic DIP and a low cost 48-pin plastic DIP.

ORDERING INFORMATION

ADSP-1410TD/883B — Processing
Package
Performance, Temp. Range
Part Number
Analog Devices Digital Signal Processing

Package
D – Ceramic DIP
N – Plastic DIP

Processing
Blank – Standard
+ – High Reliability
883B – MIL-STD-883

Performance/ Temperature
J – Standard, 0 to +70°C
K – High Speed, 0 to +70°C
S – Standard, –55°C to +125°C
T – High Speed, –55°C to +125°C

ANALOG DEVICES

16 × 16-Bit CMOS Single-Port Multiplier/Accumulator

ADSP-1110A

FEATURES

16 × 16-Bit Parallel Multiplication/Accumulation
40-Bit Wide Accumulator with Overflow Flag, Saturation Arithmetic, and Shift-Left Control
Two's Complement or Unsigned Magnitude Inputs
85ns Multiply/Accumulate Time
Low-Power CMOS Technology
150mW Max Power Dissipation
28-Pin DIP (Ceramic or Low-Cost Plastic)

ADSP-1110A SINGLE-PORT MAC BLOCK DIAGRAM

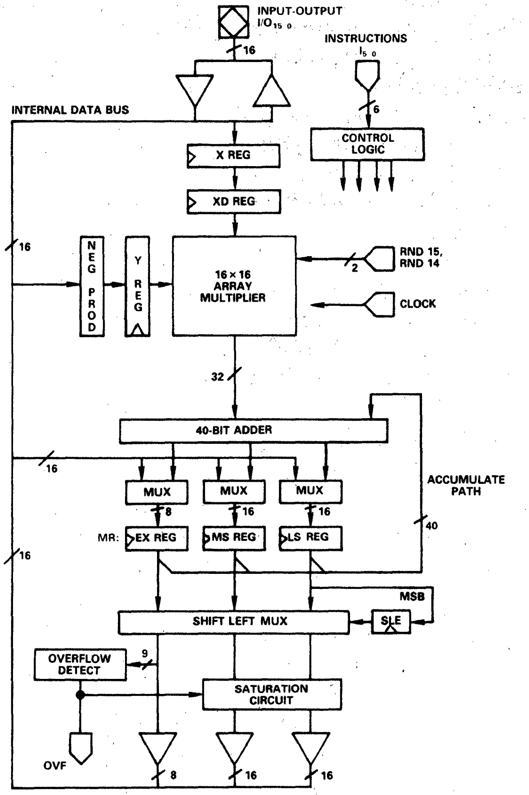

GENERAL INFORMATION

The ADSP-1110A is a high-speed, low-power, single-port 16 × 16-bit multiplier/accumulator (MAC), with processing throughput comparable to existing three-port MACs. Its single-bus structure offers unique advantages: more compact packaging in a 28-pin DIP, simpler interface to a single bus system, and significantly reduced cost. In addition, innovative on-chip features extend the ADSP-1110A's capabilities and eliminate external hardware.

The ADSP-1110A is optimal for applications where board space is limited but high throughput is required. In addition, a microprocessor-based system can realize greater throughput by utilizing the ADSP-1110A in an accelerator.

All inputs to and outputs from the ADSP-1110A pass through its single 16-bit I/O port. All I/O operations are single cycle. A multiply or multiply/accumulate operation requires two cycles to complete—consistent with the two cycles required to load input pairs to the multiplier. An internal pipeline register enables new inputs to be loaded as the previous multiply/accumulate is computed—allowing the device's full 11.8MHz computational bandwidth to be utilized.

A six-bit microcode instruction word governs the ADSP-1110A's operation. The instruction set centers around I/O and multiply/accumulate operations. Additional instructions allow extra precision in single- and double-precision operations to be obtained efficiently.

Multiplier products are accumulated in a 40-bit wide Multiplier Result (MR) register, which consists of a 16-bit MS (Most Significant) and LS (Least Significant) register, and an 8-bit EX (Extension) register. Either multiplier input can be a two's complement or unsigned magnitude number. Overflow from the lower 32 bits of the MR into the upper eight guard bits is detected and can be monitored externally. Outputs can, conditional upon overflow status, be saturated to full scale. An MR register can be shifted left by one bit upon output; two independent controls allow rounding consistent with output formatting.

The ADSP-1110A is available for both commercial and military temperature ranges. Extended temperature range parts are available with high-reliability processing ("PLUS" parts). MIL-grade parts are available processed fully to MIL-STD-883, Class B. Packaging options include a 28-pin ceramic DIP and a low-cost 28-pin plastic DIP.

ORDERING INFORMATION

ADSP-1110ATD/883B— Processing
Package
Performance, Temp. Range
Part Number
Analog Devices Digital Signal Processing

Package
D - Ceramic DIP
N - Plastic DIP

Processing
Blank - Standard
+ - High Reliability
883B - MIL-STD-883

Performance/ Temperature
J - Standard, 0 to +70°C
K - High Speed, 0 to +70°C
S - Standard, −55°C to +125°C
T - High Speed, −55°C to +125°C

TWO TECHNOLOGY WAY • P.O. BOX 280 • NORWOOD, MA 02062 • (617) 329-4700

ANALOG DEVICES

CMOS Digital Multipliers

Analog Devices offers a full line of high-speed, low-power multipliers fabricated in 1.5 micron CMOS. A complete selection of industry-standard parts is available. Additional components include a 24-bit multiplier which provides added precision, and two (optionally) pipelined 16-bit multipliers which effectively double throughput.

Analog Devices multipliers are available for both commercial and military temperature ranges. Extended temperature range parts are available with high-reliability processing ("PLUS" parts). MIL-grade parts are available processed fully to MIL-STD-883, Class B. All multipliers are offered in a variety of speed grades and package types, including low-cost plastic.

N-BIT DIGITAL MULTIPLIER FUNCTIONAL BLOCK DIAGRAM

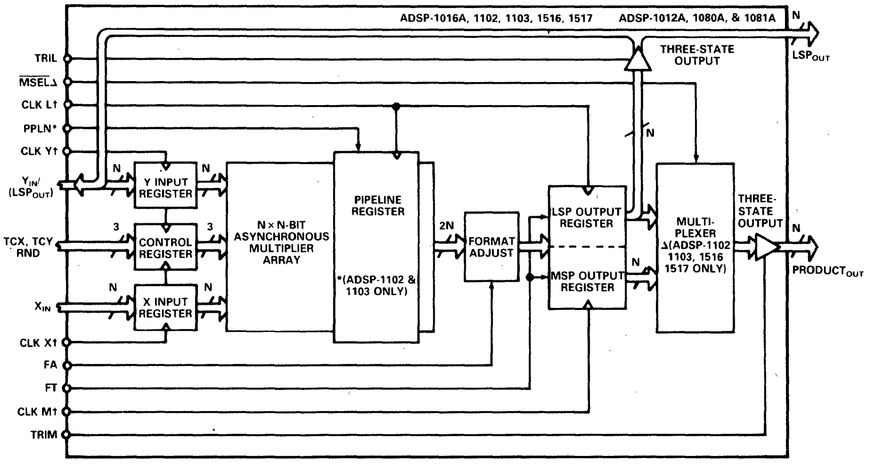
ADSP-1016A, 1102, 1103, 1516, 1517
ADSP-1012A, 1080A, & 1081A
N
LSP$_{OUT}$
THREE-STATE OUTPUT
TRIL
$\overline{MSEL}$↓
CLK L↑
PPLN*
CLK Y↑
Y$_{IN}$/(LSP$_{OUT}$)
N
Y INPUT REGISTER
N
3
CONTROL REGISTER
3
TCX, TCY, RND
N
X INPUT REGISTER
N
X$_{IN}$
N × N-BIT ASYNCHRONOUS MULTIPLIER ARRAY
PIPELINE REGISTER
*(ADSP-1102 & 1103 ONLY)
2N
FORMAT ADJUST
N
LSP OUTPUT REGISTER
MSP OUTPUT REGISTER
N
MULTI-PLEXER
↓(ADSP-1102 1103, 1516 1517 ONLY)
THREE-STATE OUTPUT
N
PRODUCT$_{OUT}$
CLK X↑
FA
FT
CLK M↑
TRIM

†NOTE: ADSP-1103 & 1517 HAVE A SINGLE CLOCK AND THREE ENABLE LINES.

Part No.	Width (Bits)	Multiply Time (ns)[1] 70°C/125°C	Power[2] (mW)	Package	Compatible Part
ADSP-1080A[3]	8×8	45/55	175	40-Pin D, N	MPY008H
ADSP-1081A[4]	8×8	45/55	175	40-Pin D, N	MPY08HU
ADSP-1012A	12×12	65/80	200	64-Pin D, N; 68-Pin G	MPY012H
ADSP-1016A	16×16	75/90	200	64-Pin D, N; 68-Pin G	MPY016
ADSP-1516	16×16	65/75	250	64-Pin D, N; 68-Pin G	Am29516
ADSP-1102[5]	16×16	35/40	250	64-Pin D, N; 68-Pin G	
ADSP-1517	16×16	65/75	250	64-Pin D, N; 68-Pin G	Am29517
ADSP-1103[5]	16×16	35/40	250	64-Pin D, N; 68-Pin G	
ADSP-1024A	24×24	90/110	300	84-Pin G	

NOTES
[1] Worst case.
[2] Worst case @ +125°C.
[3] Two's complement only.
[4] Unsigned magnitude only.
[5] Internal pipeline register.

PACKAGE TYPES
D = Ceramic Dip
N = Plastic DIP
G = Pin Grid Array

ORDERING INFORMATION

ADSP-1016ATD/883B — Processing
Package
Performance, Temp. Range
Part Number
Analog Devices Digital Signal Processing

Package
D – Ceramic DIP
N – Plastic DIP
G – Pin Grid Array

Processing
Blank – Standard
+ – High Reliability
883B – MIL-STD-883

Performance/ Temperature
J – Standard, 0 to +70°C
K – High Speed, 0 to +70°C
S – Standard, −55°C to +125°C
T – High Speed, −55°C to +125°C

TWO TECHNOLOGY WAY • P.O. BOX 280 • NORWOOD, MA 02062 • (617) 329-4700

ANALOG DEVICES

CMOS Digital Multiplier/Accumulators

Analog Devices offers a complete selection of multiplier/accumulators fabricated in high-speed, low-power 1.5 micron CMOS. These components are fully compatible with industry-standard devices. Analog Devices multiplier/accumulators are available for both commercial and military temperature ranges. Extended temperature range parts are available with high-reliability processing ("PLUS" parts). MIL-grade parts are available processed fully to MIL-STD-883, Class B. All multiplier/accumulators are offered in a variety of speed grades and package types, including low-cost plastic.

N-BIT DIGITAL MULTIPLIER/ACCUMULATOR FUNCTIONAL BLOCK DIAGRAM

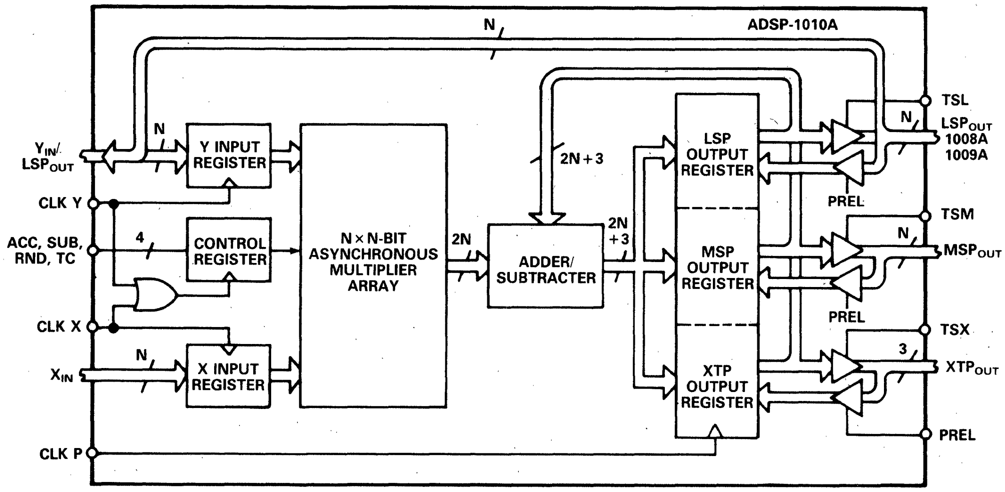
ADSP-1010A
N
Y_{IN}/ LSP_{OUT}
CLK Y
ACC, SUB, RND, TC
CLK X
X_{IN}
CLK P
N
4
N
Y INPUT REGISTER
CONTROL REGISTER
X INPUT REGISTER
N × N-BIT ASYNCHRONOUS MULTIPLIER ARRAY
2N
ADDER/ SUBTRACTER
2N+3
2N +3
LSP OUTPUT REGISTER
MSP OUTPUT REGISTER
XTP OUTPUT REGISTER
PREL
PREL
N
N
3
TSL
LSP_{OUT} 1008A 1009A
TSM
MSP_{OUT}
TSX
XTP_{OUT}
PREL

Part No.	Width (Bits)	Multiply/ Accumulate Time (ns)[1] 70°C/125°C	Power[2] (mW)	Package	Compatible Part
ADSP-1008A	8 × 8	55/65	175	48-Pin D, N	TDC1008
ADSP-1009A	12 × 12	75/90	200	64-Pin D, N; 68-Pin G	TDC1009
ADSP-1010A	16 × 16	85/100	200	64-Pin D, N; 68-Pin G	TDC1010

NOTES
[1] Worst case.
[2] Worst case @ + 125°C.

PACKAGE TYPES
D = Ceramic Dip
N = Plastic DIP
G = Pin Grid Array

ORDERING INFORMATION

ADSP-1010ATD/883B — Processing
Package
Performance, Temp. Range
Part Number
Analog Devices Digital Signal Processing

Package
D – Ceramic DIP
N – Plastic DIP
G – Pin Grid Array

Processing
Blank – Standard
+ – High Reliability
883B – MIL-STD-883

Performance/ Temperature
J – Standard, 0 to + 70°C
K – High Speed, 0 to + 70°C
S – Standard, – 55°C to + 125°C
T – High Speed, – 55°C to + 125°C

TWO TECHNOLOGY WAY • P.O. BOX 280 • NORWOOD, MA 02062 • (617) 329-4700

Marconi
Electronic Devices

BIT-SLICE CORRELATOR

MA717

PROVISIONAL DATA

FEATURES

- * 64 stage correlation for 1-bit reference and 4 bit data.
- * 20 MHz data throughput.
- * 16 bit accumulate accuracy.
- * Expandable correlation length, reference width and data width.
- * 16 bit threshold comparator.
- * CMOS/SOS technology.

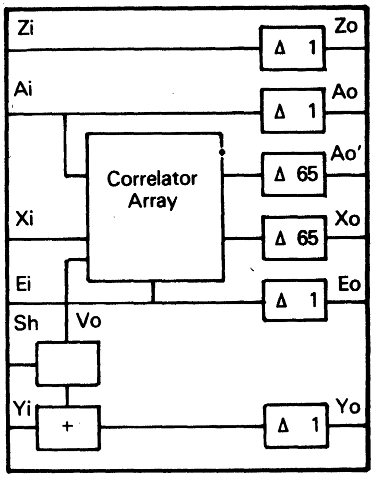

The MA717 is a 64 stage bit slice all digital correlator with 4-bit data and 1-bit reference. The design allows expansion in reference length and width and data width without the need for additional logic. The MA717 computes the correlation Y(k) between 64 reference coefficients a(i) and a data sequence x(i), expressed mathematically as

$$Y(k) = \sum_{i=0}^{63} a(i) \,.\, x(k+i)$$

The design, in CMOS/SOS technology, uses systolic techniques to provide a parallel correlation rate of 20 MHz. All internal operations are performed in 2's complement arithmetic but the data stream may be presented in either 2's complement or positive magnitude. The result is always in 2's complement and may be compared to a 2's complement 16 bit threshold level giving greater than and equal outputs.

Multiple chip applications are possible by utilizing the data expansion register and result shift together with the available data and reference outputs delayed by 1 or 65 clock cycles, and the result input and accumulate.

The MA717 has a single clock input which controls the correlation function.

DIGITAL

Circuit Technology, Inc.

Circuit Technology Inc.
I.C. Division
160 Smith St.
Farmingdale, N.Y. 11735
(516) 293-8686

Integrated
Circuits

NEED MORE PRODUCT DETAILS

Use the IC MASTER's NEW Telemarketing response system to request additional product information from IC manufacturers and CAE/CAD providers. CALL **800 443-0100 (EXT.) 518**

48 hour turn-around on your request . . . 24 hours a day, 7 days a week service.

FAIRCHILD
A Schlumberger Company

FACT™ Product Index and Selection Guide

Product Index

Device No.	Description
54AC/74AC00	Quad 2-Input NAND Gate
54AC/74AC02	Quad 2-Input NOR Gate
54AC/74AC04	Hex Inverter
54AC/74AC08	Quad 2-Input AND Gate
54AC/74AC10	Triple 3-Input NAND Gate
54AC/74AC11	Triple 3-Input AND Gate
54AC/74AC14	Hex Schmitt Trigger Inverter
54AC/74AC20	Dual 4-Input NAND Gate
54AC/74AC32	Quad 2-Input OR Gate
54AC/74AC74	Dual D Flip-Flop
54AC/74AC86	Quad 2-Input Exclusive-OR Gate
54AC/74AC109	Dual J$\overline{K}$ Positive Edge-Triggered Flip-Flop
54AC/74AC138	1-of-8 Decoder/Demultiplexer
54AC/74AC139	Dual 1-of-4 Decoder/Demultiplexer
54AC/74AC151	8-Input Multiplexer
54AC/74AC153	Dual 4-Input Multiplexer
54AC/74AC157	Quad 2-Input Multiplexer
54AC/74AC158	Quad 2-Input Multiplexer
54AC/74AC160	BCD Decade Counter, Asynchronous Reset
54AC/74AC161	4-Bit Binary Counter, Asynchronous Reset
54AC/74AC163	4-Bit Binary Counter, Synchronous Reset
54AC/74AC169	4-Bit Binary Counter
54AC/74AC174	Hex D Flip-Flop
54AC/74AC175	Quad D Flip-Flop
54AC/74AC191	Up/Down Binary Counter
54AC/74AC240	Octal Buffer/Line Driver
54AC/74AC241	Octal Buffer/Line Driver
54AC/74AC244	Octal Buffer/Line Driver
54AC/74AC245	Octal Bidirectional Transceiver
54AC/74AC251	8-Input Multiplexer
54AC/74AC253	Dual 4-Input Multiplexer
54AC/74AC257	Quad 2-Input Multiplexer
54AC/74AC258	Quad 2-Input Multiplexer
54AC/74AC273	Octal D Flip-Flop
54AC/74AC299	Octal Shift/Storage Register
54AC/74AC323	Octal Shift/Storage Register
54AC/74AC373	Octal D Flip-Flop
54AC/74AC374	Octal D Flip-Flop
54AC/74AC377	Octal D Flip-Flop with Clock Enable
54AC/74AC379	Quad D Flip-Flop with Enable

Product Index (Cont'd)

Device No.	Description
54AC/74AC520	8-Bit Identity Comparator with Pullup Resistors
54AC/74AC521	8-Bit Identity Comparator
54AC/74AC540	Octal Buffer/Line Driver
54AC/74AC541	Octal Buffer/Line Driver
54AC/74AC563	Octal D Latch
54AC/74AC564	Octal D Flip-Flop
54AC/74AC569	4-Bit Binary Counter
54AC/74AC573	Octal D Latch
54AC/74AC574	Octal D Flip-Flop
54AC/74AC646	Octal Bus Transceiver and Register
54AC/74AC648	Octal Bus Transceiver and Register
54AC/74AC708	64 X 9 FIFO Memory
54AC/74AC1010	16 X 16 Multiplier/Accumulator
54AC/74AC1016	16 X 16 Multiplier
54AC/74AC1017	16 X 16 Multiplier with Common Clock
54ACT/74ACT138	1-of-8 Decoder/Demultiplexer
54ACT/74ACT240	Octal Buffer/Line Driver
54ACT/74ACT241	Octal Buffer/Line Driver
54ACT/74ACT244	Octal Buffer/Line Driver
54ACT/74ACT245	Octal Bidirectional Transceiver
54ACT/74ACT373	Octal Transparent Latch
54ACT/74ACT374	Octal D Flip-Flop
54ACT/74ACT563	Octal D Latch
54ACT/74ACT564	Octal D Flip-Flop
54ACT/74ACT573	Octal D Latch
54ACT/74ACT574	Octal D Flip-Flop
54ACT/74ACT708	64 X 9 FIFO Memory
54ACT/74ACT1010	16 X 16 Multiplier/Accumulator
54ACT/74ACT1016	16 X 16 Parallel Multiplier
54ACT/74ACT1017	16 X 16 Parallel Multiplier with Common Clock

FAIRCHILD
A Schlumberger Company

Selection Guide

Gates

Function	Device
Quad 2-Input NAND	54AC/74AC00
Triple 3-Input NAND	54AC/74AC10
Dual 4-Input NAND	54AC/74AC20
Quad 2-Input AND	54AC/74AC08
Triple 3-Input AND	54AC/74AC11
Quad 2-Input NOR	54AC/74AC02
Hex Inverter	54AC/74AC04
Hex Schmitt Trigger Inverter	54AC/74AC14
Quad 2-Input OR	54AC/74AC32
Quad 2-Input Exclusive-OR	54AC/74AC86

Flip-Flops

Function	Device	3-State Outputs	Master Reset
Dual D	54AC/74AC74	No	No
Dual J$\overline{K}$	54AC/74AC109	No	No
Quad D Flip-Flop	54AC/74AC175	No	Yes
Quad D Flip-Flop	54AC/74AC379	No	No
Hex D Flip-Flop	54AC/74AC174	No	Yes
Hex D Flip-Flop	54AC/74AC378	No	No
Octal D Flip-Flop	54AC/74AC273	No	Yes
Octal D Flip-Flop	54AC/74AC374	Yes	No
Octal D Flip-Flop	54ACT/74ACT374	Yes	No
Octal D Flip-Flop	54AC/74AC377	No	No
Octal D Flip-Flop	54AC/74AC564	Yes	No
Octal D Flip-Flop	54ACT/74ACT564	Yes	No
Octal D Flip-Flop	54AC/74AC574	Yes	No
Octal D Flip-Flop	54ACT/74ACT574	Yes	No

Latches

Function	Device	3-State Outputs	Broadside Pinout
Octal Latch	54AC/74AC373	Yes	No
Octal Latch	54ACT/74ACT373	Yes	No
Octal D Latch	54AC/74AC563	Yes	Yes
Octal D Latch	54ACT/74ACT563	Yes	Yes
Octal D Latch	54AC/74AC573	Yes	Yes
Octal D Latch	54ACT/74ACT573	Yes	Yes

Counters

Function	Device	Parallel Entry	Reset	U/D	3-State Outputs
4-Bit BCD Decade	54AC/74AC160	S	A	No	No
4-Bit Binary	54AC/74AC161	S	A	No	No
4-Bit Binary	54AC/74AC163	S	S	No	No
4-Bit Binary	54AC/74AC169	S	S/A	Yes	No
4-Bit Binary	54AC/74AC191	A	No	Yes	No
4-Bit Binary	54AC/74AC569	S	S/A	Yes	Yes

S = Synchronous
A = Asynchronous

Shift Registers

Function	Device	No. of Bits	Reset	Serial Inputs	3-State Outputs
Octal Shift/Storage Register	54AC/74AC299	8	A	2	Yes
Octal Shift/Storage Register	54AC/74AC323	8	S	2	Yes

S = Synchronous
A = Asynchronous

Buffers/Line Drivers

Function	Device	Enable Inputs (Level)	Inverting/ Noninverting	Broadside Pinout
Octal Buffer/Line Driver	54AC/74AC240	2(L)	I	
Octal Buffer/Line Driver	54ACT/74ACT240	2(L)	I	
Octal Buffer/Line Driver	54AC/74AC241	1(L) & 1(H)	N	
Octal Buffer/Line Driver	54ACT/74ACT241	1(L) & 1(H)	N	
Octal Buffer/Line Driver	54AC/74AC244	2(L)	N	
Octal Buffer/Line Driver	54ACT/74ACT244	2(L)	N	
Octal Buffer/Line Driver	54AC/74AC540	2(L)	I	Yes
Octal Buffer/Line Driver	54AC/74AC541	1(L) & 1(H)	N	Yes

Multiplexers

Function	Device	Enable Inputs (Level)	True Output	Complement Output
8-Input	54AC/74AC151	1(L)	Yes	Yes
Dual 4-Input	54AC/74AC153	2(L)	Yes	No
Quad 2-Input	54AC/74AC157	1(L)	Yes	No
Quad 2-Input	54AC/74AC158	1(L)	No	Yes
8-Input	54AC/74AC251	1(L)	Yes	Yes
Dual 4-Input	54AC/74AC253	2(L)	Yes	No
Quad 2-Input	54AC/74AC257	1(L)	Yes	No
Quad 2-Input	54AC/74AC258	1(L)	No	Yes

Decoders/Demultiplexers

Function	Device	LOW Enable	Active-HIGH Enable	Active-LOW Outputs	Active-Address Inputs
1-of-8 Decoder/Demultiplexer	54AC/74AC138	2	1	8	3
1-of-8 Decoder/Demultiplexer	54ACT/74ACT138	2	1	8	3
Dual 1-of-4 Decoder	54AC/74AC139	1 & 1	No	4 & 4	2 & 2

Comparators

Function	Device	Features
Octal Comparator	54AC/74AC520	Expandable
Octal Comparator	54AC/74AC521	Expandable

Transceivers/Registered Transceivers

Function	Device	Registered	Enable Inputs (Level)	3-State Output
Octal Bus Transceiver	54AC/74AC245	No	1(L)	Yes
Octal Bus Transceiver	54ACT/74ACT245	No	1(L)	Yes
Octal Bus Transceiver	54AC/74AC646	Yes	1(L) & 1(H)	Yes
Octal Bus Transceiver	54AC/74AC648	Yes	1(L) & 1(H)	Yes

FIFOs

Function	Device	Input	Output	3-State Output
64 X 9 FIFO	54AC/74AC708	Parallel	Parallel	Yes
64 X 9 FIFO	54ACT/74ACT708	Parallel	Parallel	Yes

Arithmetic Functions

Function	Device	Features
16 X 16 Multiplier/Accumulator	54AC/74AC1010	2's Complement & unsigned arith.
16 X 16 Multiplier/Accumulator	54ACT/74ACT1010	2's Complement & unsigned arith.
16 X 16 Multiplier	54AC/74AC1016	2's Complement & unsigned arith.
16 X 16 Multiplier	54ACT/74ACT1016	2's Complement & unsigned arith.
16 X 16 Multiplier	54AC/74AC1017	Common Clock
16 X 16 Multiplier	54ACT/74ACT1017	Common Clock

Maximum Ratings/Recommended Operating Conditions

Absolute Maximum Ratings*

Parameter	Symbol	Conditions	Limits	Units
Supply Voltage	V_{CC}		−0.5 to 7.0	V
DC Input Diode Current or DC Input Voltage	I_{IK} V_I	$V_I = -0.5$ $V_I = V_{CC} + 0.5$	−20 20 −0.5 to V_{CC} +0.5	mA mA V
DC Output Diode Current or DC Output Voltage	I_{OK} V_O	$V_O = -0.5$ $V_O = V_{CC} + 0.5$	−20 20 −0.5 to V_{CC} +0.5	mA mA V
DC Output Source or Sink Current, Per Output Pin	I_O		±50	mA
DC V_{CC} or Ground Current	I_{CC} or I_{GND}		±200	mA
Storage Temperature	T_{STG}		−65 to 150	°C

*Absolute maximum ratings are those values beyond which damage to the device may occur. Functional operation under these conditions is not implied.

Recommended Operating Conditions

Parameter		Symbol	Conditions	Limits	Units
Supply Voltage (unless otherwise specified)		V_{CC}		2.0 to 6.0	V
Input Voltage		V_I		0 to V_{CC}	V
Output Voltage		V_O		0 to V_{CC}	V
Operating Temperature	74AC 54AC	T_A		−40 to +85 −55 to +125	°C °C
Input Rise and Fall Time (except for Schmitt inputs)		t_r, t_f	V_{CC} @ 2.0 V V_{CC} @ 4.5 V V_{CC} @ 6.0 V	0 to 1000 0 to 500 0 to 400	ns ns ns

DC Characteristics for AC Family Devices

Symbol	Parameter	Conditions	V_{CC}	54AC/74AC $T_A = 25°$		54AC $T_A =$ −55° to +125°C	74AC $T_A =$ −40° to +85°C	Units
				Typ	Guaranteed Maximum			
V_{IH}	Minimum High Level Input Voltage	$V_{OUT} = 0.1$ V or $V_{CC} - 0.1$ V	3.0		2.1	2.1	2.1	V
			4.5		3.15	3.15	3.15	
			5.5		3.85	3.85	3.85	
V_{IL}	Maximum Low Level Input Voltage	$V_{OUT} = 0.1$ V or $V_{CC} - 0.1$ V	3.0		0.9	0.9	0.9	V
			4.5		1.35	1.35	1.35	
			5.5		1.65	1.65	1.65	
V_{OH}	Minimum High Level Output Voltage	$V_{IN} = V_{IL}$ or V_{IH} $I_{OUT} = -20\mu A$	3.0	2.99	2.9	2.9	2.9	V
			4.5	4.49	4.4	4.4	4.4	
			5.5	5.49	5.4	5.4	5.4	
		I_{OH} −4 mA	3.0		2.56	2.4	2.46	V
		I_{OH} −24 mA	4.5		3.86	3.7	3.76	
		I_{OH} −24 mA	5.5		4.86	4.7	4.76	
V_{OL}	Maximum Low Level Output Voltage	$V_{IN} = V_{IL}$ or V_{IH} $I_{OUT} = 20\ \mu A$	3.0	.002	0.1	0.1	0.1	V
			4.5	.001	0.1	0.1	0.1	
			5.5	.001	0.1	0.1	0.1	
		I_{OL} 4 mA	3.0		0.32	0.4	0.37	V
		I_{OL} 24 mA	4.5		0.32	0.4	0.37	
		I_{OL} 24 mA	5.5		0.32	0.4	0.37	
I_{IN}	Maximum Input Leakage Current	$V_I = V_{CC}$,GND	5.5		±0.1	±1.0	±1.0	μA
I_{OZ}	Maximum 3-State Current	$V_I = V_{IL}, V_{IH}$ $V_O = V_{CC}$,GND	5.5		±0.5	±10.0	±5.0	μA

DC Characteristics for ACT Family Devices

Symbol	Parameter	Conditions	V_{CC}	54AC/74AC $T_A = 25°C$		54AC $T_A =$ −55° to +125°C	74AC $T_A =$ −40° to +85°C	Units
				Typ	Guaranteed Maximum			
V_{IH}	Minimum High Level Input Voltage	$V_{OUT} = 0.1$ V or $V_{CC} - 0.1$ V	4.5 5.5		2.0 2.0	2.0 2.0	2.0 2.0	V
V_{IL}	Minimum Low Level Input Voltage	$V_{OUT} = 0.1$ V or $V_{CC} - 0.1$ V	4.5 5.5		0.8 0.8	0.8 0.8	0.8 0.8	V
V_{OH}	Minimum High Level Output Voltage	$V_{IN} = V_{IL}$ or V_{IH} $I_{OUT} = -20$ µA	4.5 5.5	4.49 5.49	4.4 5.4	4.4 5.4	4.4 5.4	V
		I_{OH} −24 mA −24 mA	4.5 5.5		3.86 4.86	3.7 4.7	3.76 4.76	V
V_{OL}	Minimum Low Level Output Voltage	$V_I = V_{IL}$ or V_{IH} $I_{OUT} = 20$ µA	4.5 5.5	0.001 0.001	0.1 0.1	0.1 0.1	0.1 0.1	V
		I_{OL} 24 mA 24 mA	4.5 5.5		0.32 0.32	0.4 0.4	0.37 0.37	V
I_{IN}	Maximum Input	$V_I = V_{CC}$,GND	5.5		±0.1	±1.0	±1.0	µA
I_{OZ}	Maximum 3-State Current	$V_I = V_{IL}, V_{IH}$ $V_O = V_{CC}$,GND	5.5		±0.5	±10.0	±5.0	µA
I_{CC}	Maximum I_{CC}/Input	$V_I = 2.4$ V/0.4 V	5.5	0.600	2.0	3.0	2.9	mA

FACT™ Ordering Information

The Product Index and Selection Guide lists only the basic device numbers. This basic number is used to form part of a simplified purchasing code where the package type and temperature range are defined as follows:

74AC 245 P C QR

Temperature Range Family
74AC = Commercial Advanced CMOS
54AC = Military Advanced CMOS
74ACT = Commercial TTL Compatible Advanced CMOS
54ACT = Military TTL Compatible Advanced CMOS

Device Type

Package Code
P = Plastic DIP
SP = Slim Plastic DIP
D = Ceramic DIP
SD = Slim Ceramic DIP
F = Flatpak
L1 = Leadless Ceramic Chip Carrier (LCC)
Q = Plastic Leaded Chip Carriers
S = Small Outline

Temperature Range
C = Commercial
M = Military

Special Variations
T = Devices shipped in 7" reels
X = Devices shipped in 14" reels
QR = Commercial grade device with burn-in shipped in tubes
TR = Commercial grade device with burn-in shipped in 7" reels
XR = Commercial grade device with burn-in shipped in 14" reels
QB = Military grade devices with environmental and with burn-in processing shipped in tubes

Package	Package Code
Plastic DIP	P
Slim Plastic DIP	SP
Ceramic DIP	D
Slim Ceramic DIP	SD
Flatpak	F
Leadless Ceramic Chip Carrier (LCC)	L1
Plastic Chip Carrier (PCC)	Q
Small Outline	S

Temperature Range	Temperature Code
Commercial −40°C to +85°C	C
Military −55°C to +125°C	M

FAST® Selection Guide

Gates

Function	Device
NAND	
Quad 2-Input NAND	54F/74F00
Triple 3-Input NAND	54F/74F10
Dual 4-Input NAND Schmitt Trigger	54F/74F13
Dual 4-Input NAND	54F/74F20
Quad 2-Input Positive NAND Buffer	54F/74F37
Quad 2-Input Positive NAND Buffer (OC)	54F/74F38
Dual 4-Input Positive NAND Buffer	54F/74F40
Quad 2-Input Positive NAND Schmitt Trigger	54F/74F132
Quad 2-Input Positive NAND 30Ω Buffer	54F/74F3037
Quad 2-Input NAND 30Ω Buffer (OC)	54F/74F3038
Dual 4-Input Positive NAND 30Ω Buffer	54F/74F3040
AND	
Quad 2-Input AND	54F/74F08
Triple 3-Input AND	54F/74F11
OR/NOR/Exclusive-OR	
Quad 2-Input NOR	54F/74F02
Quad 2-Input OR	54F/74F32
Quad 2-Input Exclusive-OR	54F/74F86
Invert/AND-OR-Invert	
Hex Inverter	54F/74F04
Hex Inverter Schmitt Trigger	54F/74F14
AND-OR-Invert	54F/74F64

Dual Edge-Triggered Flip-Flops

Function	Device	Clock Edge	Direct Set	Direct Clear
Dual D	54F/74F74	↑	Yes	Yes
Dual J$\overline{K}$	54F/74F109	↑	Yes	Yes
Dual JK	54F/74F112	↓	Yes	Yes
Dual JK	54F/74F113	↓	Yes	No
Dual JK	54F/74F114	↓	Yes	Yes

Selection Guide (cont'd)

Multiple Flip-Flops

Function	Device	Clock Inputs	Master Reset	Broadside Pinout	3-State Outputs
Hex D Flip-Flop	54F/74F174	1(⎍)	Yes		
Quad D Flip-Flop	54F/74F175	1(⎍)	Yes		
Octal D Flip-Flop	54F/74F273	1(⎍)	Yes		
Octal D Flip-Flop	54F/74F374	1(⎍)			Yes
Octal D Flip-Flop	54F/74F377	1(⎍)			
Hex D Flip-Flop	54F/74F378	1(⎍)			
Quad D Flip-Flop	54F/74F379	1(⎍)			
Octal D Flip-Flop	54F/74F534	1(⎍)			Yes
Octal D Flip-Flop	54F/74F564	1(⎍)		Yes	Yes
Octal D Flip-Flop	54F/74F574	1(⎍)		Yes	Yes
10-Bit D Flip-Flop	54F/74F821	1(⎍)	Yes	Yes	Yes
10-Bit D Flip-Flop	54F/74F822	1(⎍)	Yes	Yes	Yes
9-Bit D Flip-Flop	54F/74F823	1(⎍)	Yes	Yes	Yes
Octal Flip-Flop	54F/74F825	1(⎍)	Yes	Yes	Yes
8-Bit D Flip-Flop	54F/74F826	1(⎍)	Yes	Yes	Yes

Registers

Function	Device	Clock Inputs
Quad 2-Port Register	54F/74F398	1(⎍)
Quad 2-Port Register	54F/74F399	1(⎍)
Data Access Register	54F/74F402	1(⎍)
Register Stack	54F/74F410	1(⎍)
Dual 8-Bit Register	54F/74F604	1(⎍)

Latches

Function	Device	Enable Inputs (Level)	Broadside Pinout	Transparent	3-State Outputs
Dual Quad Addressable Latch	54F/74F256	1(L)			
Octal Addressable Latch	54F/74F259	1(L)			
Octal Latch	54F/74F373	1(H)			Yes
Multimode Octal Latch	54F/74F412				Yes
Multimode Octal Latch	54F/74F432				Yes
Octal D Latch	54F/74F533	1(H)			Yes
Octal D Latch	54F/74F563	1(H)	Yes		Yes
Octal D Latch	54F/74F573	1(H)	Yes		Yes
10-Bit D Latch	54F/74F841	1(L)	Yes	Yes	Yes
9-Bit D Latch	54F/74F843	1(L)	Yes	Yes	Yes
Octal D Latch	54F/74F845	3(L)	Yes	Yes	Yes

Selection Guide (cont'd)

Counters

Function	Device	Parallel Entry	Reset	U/D	3-State Outputs
4-Bit BCD Decade	54F/74F160A	S	A		
4-Bit Binary	54F/74F161A	S	A		
4-Bit BCD Decade	54F/74F162A	S	S		
4-Bit Binary	54F/74F163A	S	S		
4-Bit BCD Decade	54F/74F168	S		Yes	
4-Bit Binary	54F/74F169	S		Yes	
4-Bit BCD Decade	54F/74F190	A		Yes	
4-Bit Binary	54F/74F191	A		Yes	
4-Bit BCD Decade	54F/74F192	A	A	Yes	
4-Bit Binary	54F/74F193	A	A	Yes	
8-Bit Binary	54F/74F269	S		Yes	
16-Stage Programmable	54F/74F525		A		
4-Bit BCD Decade	54F/74F568	S	S/A	Yes	Yes
4-Bit Binary	54F/74F569	S	S/A		Yes
8-Bit Binary	54F/74F579	S		Yes	
8-Bit Binary	54F/74F779	S		Yes	

S = Synchronous
A = Asynchronous

Shift Registers

Function	Device	No. of Bits	Serial Entry	Parallel Inputs	3-State Outputs
Shift Right, Serial-In, Parallel-Out	54F/74F164	8	2		
Bidirectional, Serial/Parallel-In, Serial/Parallel-Out	54F/74F194	4	2	Yes	
Shift Register	54F/74F195	4	2	Yes	
Octal Shift/Storage Register	54F/74F299	8	2		Yes
Octal Shift/Storage Register	54F/74F322	8	2		Yes
Octal Shift/Storage Register	54F/74F323	8	2		Yes
Universal Shift Register	54F/74F395	4	1	Yes	Yes
Octal Shift, Output Latch	54F/74F595	8	1		Yes
Octal Shift, Input Latch	54F/74F597	8	1	Yes	Yes
Octal Shift, Input Latch	54F/74F598	8	2	Yes	Yes
Serial-In, Serial/Parallel-Out	54F/74F673A	16	1		Yes
Serial/Parallel-In, Serial-Out	54F/74F674	16	1	Yes	Yes
Serial-In, Serial/Parallel-Out	54F/74F675A	16	1		
Serial/Parallel-In, Serial-Out	54F/74F676	16	1	Yes	

Selection Guide (cont'd)

Buffers/Line Drivers

Function	Device	Enable Inputs (Level)	Inverting/ Noninverting	Broadside Pinout
Octal Buffer/Line Driver	54F/74F240	2(L)	I	
Octal Buffer/Line Driver	54F/74F241	1(L) & 1(H)	N	
Octal Buffer/Line Driver	54F/74F244	2(L)	N	
Hex Buffer	54F/74F365	2(L)	N	
Hex Inverter	54F/74F366	2(L)	I	
Hex Buffer	54F/74F367	2(L)	N	
Hex Inverter	54F/74F368	2(L)	I	
Octal Buffer/Line Driver	54F/74F540	2(L)	I	Yes
Octal Buffer/Line Driver	54F/74F541	1(L) & 1(H)	N	Yes
Octal Buffer	54F/74F655	3(L)	N	
Octal Buffer	54F/74F656	3(L)	N	
10-Bit Buffer/Line Driver	54F/74F827	2(L)	N	Yes
10-Bit Buffer/Line Driver	54F/74F828	2(L)	I	Yes
Octal Buffer/Line Driver 30Ω	54F/74F30240	2(L)	I	
Octal Buffer/Line Driver 30Ω	54F/74F30241	1(L) & 1(H)	N	
Octal Buffer/Line Driver 30Ω	54F/74F30244	2(L)	N	

Transceivers

Function	Device	Registered	Enable Inputs (Level)	3-State Output	Features
Quad Bus Transceiver	54F/74F242		1(L) & 1(H)	Yes	
Quad Bus Transceiver	54F/74F243		1(L) & 1(H)	Yes	
Octal Bus Transceiver	54F/74F245		1(L)	Yes	
Octal Registered Transceiver	54F/74F543	Yes	2(L)	Yes	
Octal Registered Transceiver	54F/74F544	Yes	2(L)	Yes	
Octal Bus Transceiver	54F/74F545		1(L)	Yes	
Octal Registered Transceiver	54F/74F550	Yes	2(L)	Yes	Status Flags
Octal Registered Transceiver	54F/74F551	Yes	2(L)	Yes	Status Flags
Octal Registered Transceiver	54F/74F552	Yes	1(L)		Parity & Flag
Octal Transceiver	54F/74F588		1(L)	Yes	GPIB Compatible
Octal Bus Transceiver	54F/74F620		2(H)	Yes	
Octal Bus Transceiver	54F/74F621		1(L) & 1(H)		Open Collector
Octal Bus Transceiver	54F/74F622		1(L) & 1(H)		Open Collector
Octal Bus Transceiver	54F/74F623		2(H)	Yes	
Octal Bus Transceiver	54F/74F646		1(L) & 1(H)	Yes	w/Register
Octal Bus Transceiver	54F/74F648		1(L) & 1(H)	Yes	w/Register
Octal Bus Transceiver	54F/74F657		1(L) & 1(H)		Parity
Read Back Transceiver	54F/74F702		2(L)	Yes	Latched Inputs/Outputs
Octal Registered Transceiver	29F52	Yes	2(L)	Yes	
Octal Registered Transceiver	29F53	Yes	2(L)	Yes	

Selection Guide (cont'd)

Multiplexers

Function	Device	Enable Inputs (Level)	True Output	Complement Output
8-Input	54F/74F151A	1(L)	Yes	Yes
Dual 4-Input	54F/74F153	2(L)	Yes	No
Quad 2-Input	54F/74F157A	1(L)	Yes	No
Quad 2-Input	54F/74F158A	1(L)	No	Yes
8-Input	54F/74F251A	1(L)	Yes	Yes
Dual 4-Input	54F/74F253	2(L)	Yes	No
Quad 2-Input	54F/74F257A	1(L)	Yes	No
Quad 2-Input	54F/74F258A	1(L)	No	Yes
Quad 2-Input w/Storage	54F/74F298		Yes	No
4-Input w/Shift	54F/74F350	1(L)	Yes	No
Dual 4-Input	54F/74F352	2(L)	No	Yes
Dual 4-Input	54F/74F353	2(L)	No	Yes
Quad 2-Input w/Flip-Flop	54F/74F398		Yes	Yes
Quad 2-Input w/Flip-Flop	54F/74F399		Yes	No

Decoders/Demultiplexers

Function	Device	Address Inputs	Active LOW Enable	Active HIGH Enable	Active LOW Output Enable	Active LOW Outputs	Active HIGH Outputs
1-of-8 Decoder/Demultiplexer	54F/74F138	3	2	1		8	
Dual 1-of-4 Decoder	54F/74F139	2 & 2	1 & 1			4 & 4	
1-of-10 Decoder	54F/74F537	4	1	1	1		10
1-of-8 Decoder	54F/74F538	3	2	2	2		8
Dual 1-of-4 Decoder	54F/74F539	2 & 2	1 & 1		1 & 1		4 & 4
Octal Decoder/Demultiplexer w/Latches	54F/74F547	3	1	2		8	
Octal Decoder/Demultiplexer	54F/74F548	3	2	2		8	

Adders

Function	Device	Master Reset	Carry Lookahead
Binary Full Adder	54F/74F283		Yes
Quad Adder/Subtractor	54F/74F385	Yes	
BCD Adder	54F/74F583		Yes

Selection Guide (cont'd)

Multipliers

Function	Device	Serial/ Parallel	Latches	3-State Outputs
8-Bit Multiplier	54F/74F384	S/P		
8-Bit Multiplier w/Adder/Subtractor	54F/74F784	S/P		
16 x 16 Multiplier	29F516	P		Yes

Comparators

Function	Device	Features
4-Bit Magnitude Comparator	54F/74F85	
Octal Comparator	54F/74F521	Expandable
8-Bit Register Comparator	54F/74F524	Expandable, Registered

Divider

Function	Device	Features
16-Stage Programmable Counter/Divider	54F/74F525	Crystal Oscillator

Parity Generator/Checker

Function	Device	Features
Parity Generator/Checker	54F/74F280	Odd/Even Outputs 9-Bits In

ALUs

Function	Device	No. of Bits	Arithmetic Functions	Logic Functions	Features
Arithmetic Logic Unit	54F/74F181	4	16	16	Carry Generate/ Propagate Output
Arithmetic Logic Unit	54F/74F381	4	3	3	Carry Generate/ Propagate Outputs
Arithmetic Logic Unit	54F/74F382	4	3	3	Ripple Carry Expansion
BCD Adder/Subtractor	54F/74F582	4	2		Lookahead & Ripple Carry Expansion

Selection Guide (cont'd)

ALU Support

Function	Device	No. of Bits	Features
Carry Lookahead	54F/74F182	4	Carry Lookahead Generator for 4 ALUs
Shifter	54F/74F350	4	Expandable Shifter

FIFOs

Function	Device	Input	Output
16x4 FIFO	54F/74F403	Serial/Parallel	Serial/Parallel
64x4 FIFO	54F/74F413	Parallel	Parallel
64x4 FIFO	54F/74F433	Serial/Parallel	Serial/Parallel

Memories

Function	Device	Latch	3-State Outputs
16x4 RAM	54F/74F189		Yes
16x9 RAM	54F/74F211	Yes	Yes
16x9 RAM	54F/74F212		Yes
16x12 RAM	54F/74F213		Yes
16x4 RAM	54F/74F219		Yes

Memory Support

Function	Device	Latched	3-State Outputs
Data Access Register	54F/74F407		
Register Stack	54F/74F410		
FIFO RAM Controller	54F/74F411		
Parallel Error Detection & Correction	54F/74F420		
16-Bit Error Detection & Correction	54F/74F630		
52-Bit Error Detection & Correction	54F/74F632	Yes	Yes
Dynamic RAM Controller	29F68		

Selection Guide (cont'd)

Bit Slice and Support

Function	Device	Features
Arithmetic Logic Unit	29F01	4-Bit Microprocessor Slice w/16x4 RAM 8-Function ALU
Controller	29F10	Microprocessor Controller; 4K Addressing & 5-Deep LIFO Stack

Microprocessor Support

Function	Device
Priority Interrupt Controller	54F/74F146
8-Bit Priority Encoder	54F/74F148

Specialized LSI

Function	Device	Features
CRC Generator/Checker	54F/74F401	Polynomial Length-16
Expandable CRC Generator/Checker	54F/74F402	Polynomial Length-674
6-Bit A/D Flash Converter	54F/74F500	
Register Counter/Comparator	54F/74F701	

54F/74F401

CRC Generator/Checker

Description

The 'F401 Cycle Redundancy Check (CRC) Generator/Checker provides an advanced tool for implementing the most widely used error detection scheme in serial digital data handling systems. A 3-bit control input selects one-of-eight generator polynomials. The list of polynomials includes CRC-16 and CRC-CCITT as well as their reciprocals (reverse polynomials). Automatic right justification is incorporated for polynomials of degree less than 16. Separate clear and preset inputs are provided for floppy disk and other applications. The Error output indicates whether or not a transmission error has occurred. Another control input inhibits feedback during check word transmission. The 'F401 is fully compatible with all TTL families.

- **Eight Selectable Polynomials**
- **Error Indicator**
- **Separate Preset and Clear Controls**
- **Automatic Right Justification**
- **Fully Compatible with all TTL Logic Families**
- **14-Pin Package**
- **9401 Equivalent**
- **Typical Applications:**
  - **Floppy and Other Disk Storage Systems**
  - **Digital Cassette and Cartridge Systems**
  - **Data Communication Systems**

Connection Diagrams

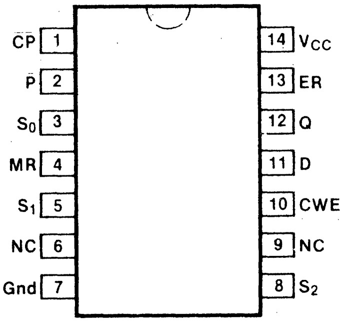
$\overline{CP}$ 1
$\overline{P}$ 2
S_0 3
MR 4
S_1 5
NC 6
Gnd 7
14 V_{CC}
13 ER
12 Q
11 D
10 CWE
9 NC
8 S_2

Pin Assignment for DIP and SOIC

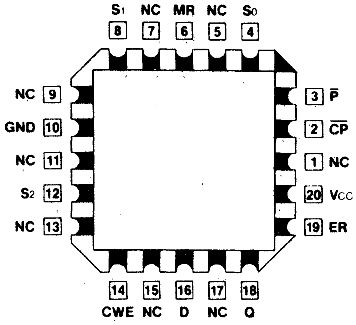
S_1 8
NC 7
MR 6
NC 5
S_0 4
NC 9
GND 10
NC 11
S_2 12
NC 13
3 $\overline{P}$
2 $\overline{CP}$
1 NC
20 V_{CC}
19 ER
14 CWE
15 NC
16 D
17 NC
18 Q

Pin Assignment for LCC and PCC

Logic Symbol

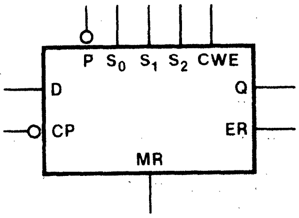
P
S_0
S_1
S_2
CWE
D
Q
CP
ER
MR

Input Loading/Fan-Out: See Section 3 for U.L. definitions

Pin Names	Description	54F/74F(U.L.) HIGH/LOW
S_0-S_2	Polynomial Select Inputs	0.5/0.375
D	Data Input	0.5/0.375
$\overline{CP}$	Clock Input (Operates on HIGH-to-LOW Transition)	0.5/0.375
CWE	Check Word Enable Input	0.5/0.375
$\overline{P}$	Preset (Active LOW) Input	0.5/0.375
MR	Master Reset (Active HIGH) Input	0.5/0.375
Q	Data Output	25/12.5
ER	Error Output	25/12.5

Block Diagram

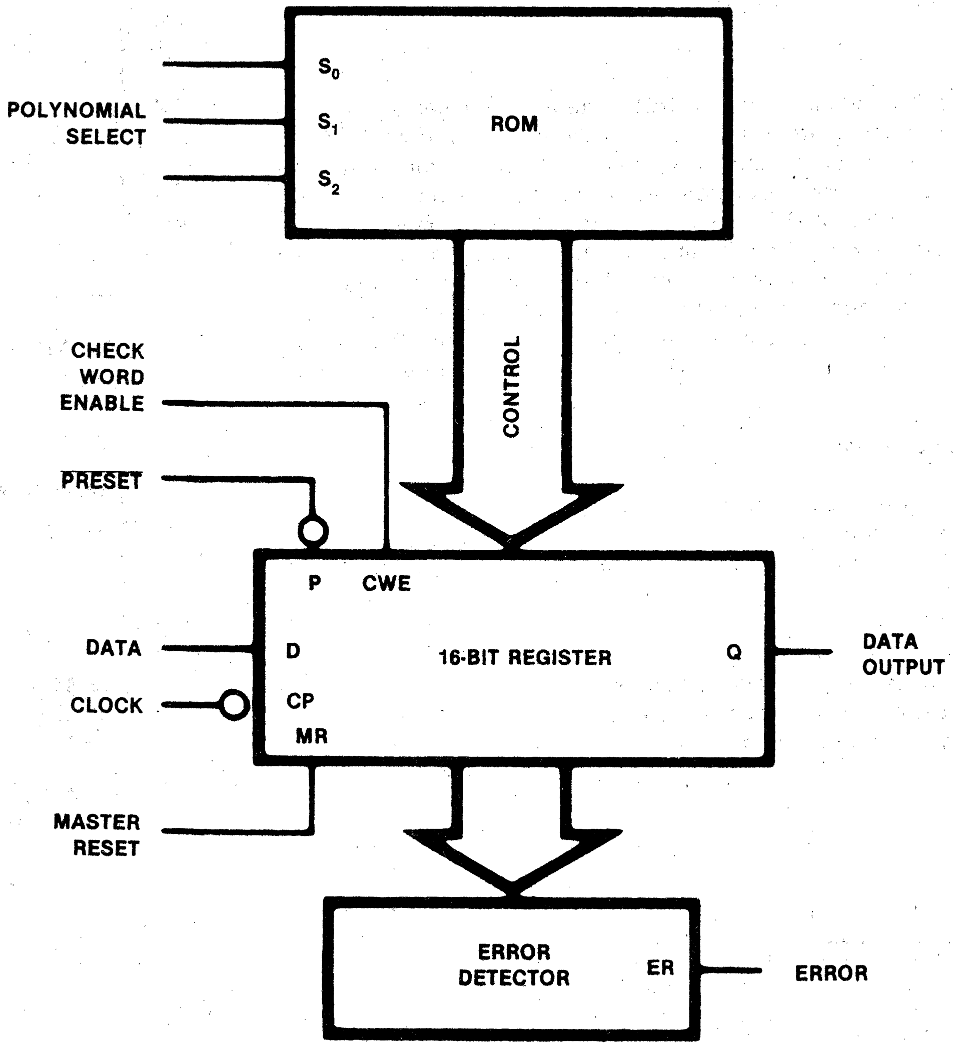
POLYNOMIAL SELECT
S_0
S_1
S_2
ROM
CONTROL
CHECK WORD ENABLE
PRESET
P
CWE
DATA
D
16-BIT REGISTER
Q
DATA OUTPUT
CLOCK
CP
MR
MASTER RESET
ERROR DETECTOR
ER
ERROR

Functional Description

The 'F401 is a 16-bit programmable device which operates on serial data streams and provides a means of detecting transmission errors. Cyclic encoding and decoding schemes for error detection are based on polynomial manipulation in modulo arithmetic. For encoding, the data stream (message polynomial) is divided by a selected polynomial. This division results in a remainder which is appended to the message as check bits. For error checking, the bit stream containing both data and check bits is divided by the same selected polynomial. If there are no detectable errors, this division results in a zero remainder. Although it is possible to choose many generating polynomials of a given degree, standards exist that specify a small number of useful polynomials. The 'F401 implements the polynomials listed in Table 1 by applying the appropriate logic levels to the select pins S_0, S_1 and S_2.

The 'F401 consists of a 16-bit register, a Read Only Memory (ROM) and associated control circuitry as shown in the block diagram. The polynomial control code presented at inputs S_0, S_1 and S_2 is decoded by the ROM, selecting the desired polynomial by establishing shift mode operation on the register with Exclusive OR gates at appropriate inputs. To generate the check bits, the data stream is entered via the Data inputs (D), using the HIGH-to-LOW transition of the Clock input ($\overline{CP}$). This data is gated with the most significant output (Q) of the register, and controls the Exclusive OR gates (Figure 1). The Check Word Enable (CWE) must be held HIGH while the data is being entered. After the last data bit is entered, the CWE is brought LOW and the check bits are shifted out of the register and appended to the data bits using external gating (Figure 2).

To check an incoming message for errors, both the data and check bits are entered through the D input with the CWE input held HIGH. The 'F401 is not in the data path, but only monitors the message. The Error Output becomes valid after the last check bit has been entered into the 'F401 by a HIGH-to-LOW transition of $\overline{CP}$. If no detectable errors have occurred during the data transmission, the resultant internal register bits are all LOW and the Error Output (ER) is LOW. If a detectable error has occurred, ER is HIGH.

A HIGH on the Master Reset input (MR) asynchronously clears the register. A LOW on the Preset input ($\overline{P}$) asynchronously sets the entire register if the control code inputs specify a 16-bit polynomial; in the case of 12 or 8-bit check polynomials only the most significant 12 or 8 register bits are set and the remaining bits are cleared.

Table 1

Select Code			Polynomial	Remarks
S_2	S_1	S_0		
L	L	L	$X^{16} + X^{15} + X^2 + 1$	CRC-16
L	L	H	$X^{16} + X^{14} + X + 1$	CRC-16 REVERSE
L	H	L	$X^{16} + X^{15} + X^{13} + X^7 + X^4 + X^2 + X^1 + 1$	
L	H	H	$X^{12} + X^{11} + X^3 + X^2 + X + 1$	CRC-12
H	L	L	$X^8 + X^7 + X^5 + X^4 + X + 1$	
H	L	H	$X^8 + 1$	LRC-8
H	H	L	$X^{16} + X^{12} + X^5 + 1$	CRC-CCITT
H	H	H	$X^{16} + X^{11} + X^4 + 1$	CRC-CCITT REVERSE

Fig. 1 Equivalent Circuit for $X^{16} + X^{15} + X^2 + 1$

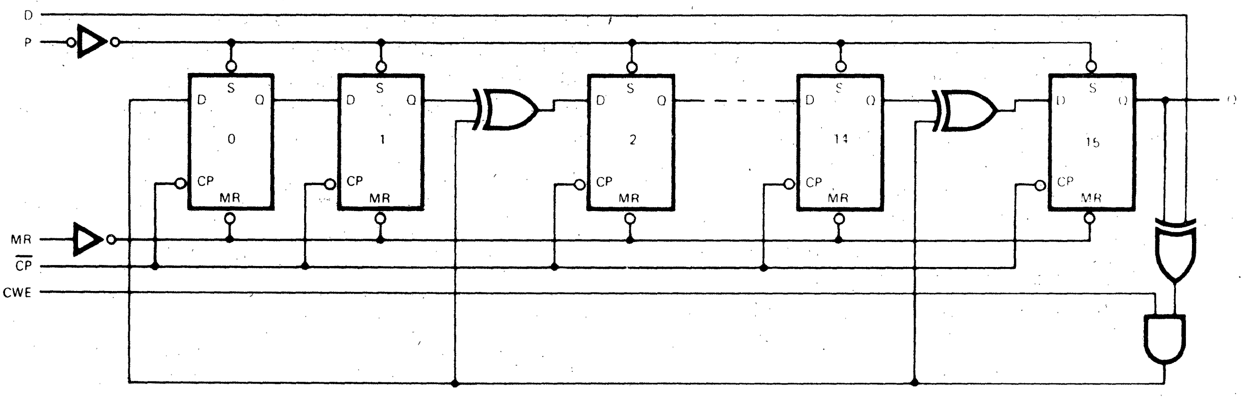
D
P
MR
$\overline{CP}$
CWE
S
D
Q
CP
MR
0
1
2
14
15
Q

Fig. 2 Check Word Generation

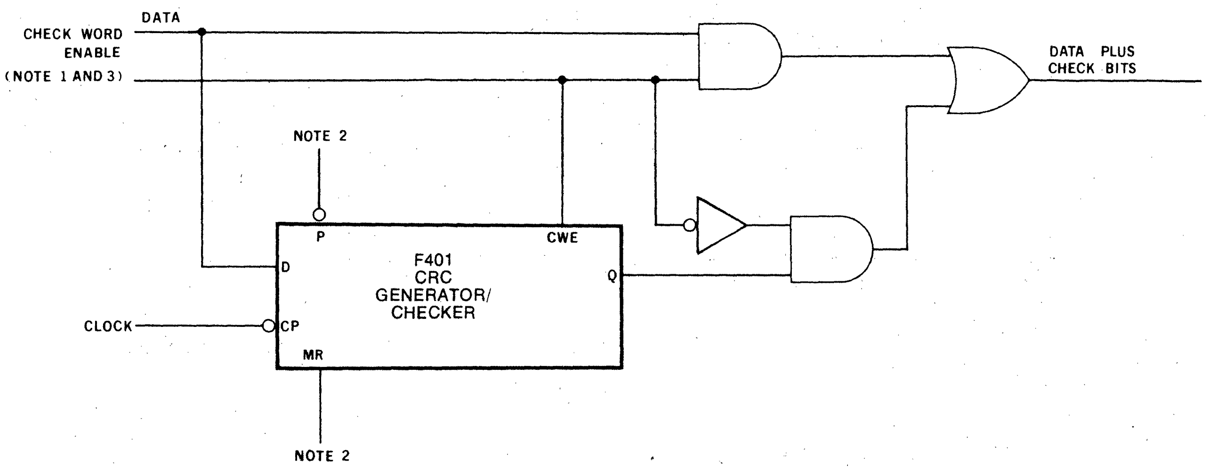
DATA
CHECK WORD
ENABLE
(NOTE 1 AND 3)
NOTE 2
P
CWE
D
Q
F401
CRC
GENERATOR/
CHECKER
CLOCK
CP
MR
NOTE 2
DATA PLUS
CHECK BITS

NOTES:
1. Check word Enable is HIGH while data is being clocked, LOW while transmission of check bits.
2. 'F401 must be reset or preset before each computation.
3. CRC check bits are generated and appended to data bits.

DC Characteristics over Operating Temperature Range (unless otherwise specified)

Symbol	Parameter	54F/74F Min	54F/74F Typ	54F/74F Max	Units	Conditions
I_{CC}	Power Supply Current		70	110	mA	V_{CC} = Max, Inputs Open

AC Characteristics

Symbol	Parameter	54F/74F $T_A = +25°C$ $V_{CC} = +5.0$ V $C_L = 50$ pF Min	Typ	Max	54F T_A, V_{CC} = Mil $C_L = 50$ pF Min	Max	74F T_A, V_{CC} = Com $C_L = 50$ pF Min	Max	Units
f_{max}	Maximum Clock Frequency	100	120				85		MHz
t_{PLH} t_{PHL}	Propagation Delay $\overline{\text{CP}}$ to Q	4.5 4.0	9.0 8.0	11.5 10.0			4.5 4.0	13.5 11.0	ns
t_{PHL}	Propagation Delay MR to Q	3.0	5.5	7.5			3.0	8.0	ns
t_{PLH}	Propagation Delay $\overline{\text{P}}$ to Q	3.0	6.0	8.5			3.0	9.5	ns
t_{PLH} t_{PHL}	Propagation Delay $\overline{\text{CP}}$ to ER	5.0 4.5	10.0 9.0	13.0 11.5			5.0 4.5	14.5 12.5	ns
t_{PHL}	Propagation Delay MR to ER	3.5	8.0	11.0			3.5	12.0	ns
t_{PLH}	Propagation Delay $\overline{\text{P}}$ to ER	3.0	6.0	8.5			3.0	10.0	ns

For information on waveforms, see Section 3 of the 1985 FAST Data Book.

AC Operating Requirements

Symbol	Parameter	54F/74F			54F		74F		Units
		$T_A = +25°C$ $V_{CC} = +5.0\ V$			T_A, V_{CC} = Mil		T_A, V_{CC} = Com		
		Min	Typ	Max	Min	Max	Min	Max	
$t_s(H)$ $t_s(L)$	Setup Time, HIGH or LOW D to $\overline{CP}$	5.0 5.0					5.5 5.5		ns
$t_h(H)$ $t_h(L)$	Hold Time, HIGH or LOW D to $\overline{CP}$	2.0 2.0					2.0 2.0		ns
$t_s(H)$ $t_s(L)$	Setup Time, HIGH or LOW CWE to $\overline{CP}$	4.0 4.0					4.5 4.5		ns
$t_h(H)$ $t_h(L)$	Hold Time, HIGH or LOW CWE to $\overline{CP}$	2.0 2.0					2.0 2.0		ns
$t_w(H)$ $t_w(L)$	Pulse Width, $\overline{CP}$	5.0 5.0					6.0 6.0		ns
$t_w(H)$	Pulse Width, MR	5.0					5.5		ns
$t_w(L)$	Pulse Width, $\overline{P}$	7.0					8.0		ns
t_{rec}	Recovery Time MR to $\overline{CP}$	4.0					4.5		ns
t_{rec}	Recovery Time $\overline{P}$ to $\overline{CP}$	2.0					2.0		ns

For information on waveforms, see Section 3 of the 1985 FAST Data Book.

54F/74F402

Serial Data Polynomial Generator/Checker

Description

The 'F402 expandable Serial Data Polynomial generator/checker is an expandable version of the 'F401. It provides an advanced tool for the implementation of the most widely used error detection scheme in serial digital handling systems. A 4-bit control input selects one-of-six generator polynomials. The list of polynomials includes CRC-16, CRC-CCITT and Ethernet, as well as three other standard polynomials (56th order, 48th order, 32nd order). Individual clear and preset inputs are provided for floppy disk and other applications. The Error output indicates whether or not a transmission error has occurred. The CWG Control input inhibits feedback during check word transmission. The 'F402 is compatible with Fairchild Advanced Schottky TTL (FAST) devices and is fully compatible with all TTL families.

- **Guaranteed 30 MHz Data Rate**
- **Six Selectable Polynomials**
- **Other Polynomials Available**
- **Separate Preset and Clear Controls**
- **Expandable**
- **Automatic Right Justification**
- **Error Output Open Collector**
- **Typical Applications**
  - **Floppy and Other Disk Storage Systems**
  - **Digital Cassette and Cartridge Systems**
  - **Data Communication Systems**

Connection Diagrams

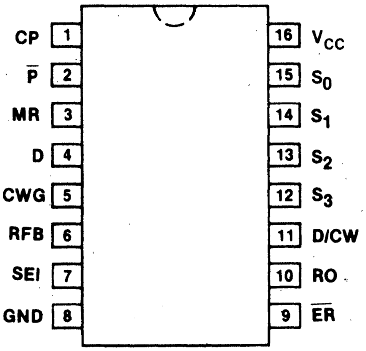
CP 1
P̄ 2
MR 3
D 4
CWG 5
RFB 6
SEI 7
GND 8
16 VCC
15 S0
14 S1
13 S2
12 S3
11 D/CW
10 RO
9 ER

Pin Assignment for DIP and SOIC

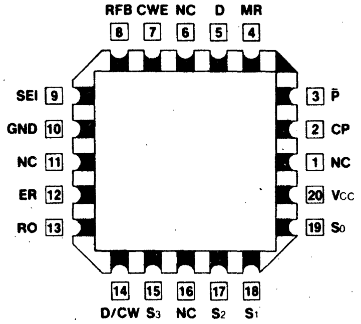
RFB CWE NC D MR
8 7 6 5 4
SEI 9
GND 10
NC 11
ER 12
RO 13
3 P̄
2 CP
1 NC
20 VCC
19 S0
14 15 16 17 18
D/CW S3 NC S2 S1

Pin Assignment for LCC and PCC

Logic Symbol

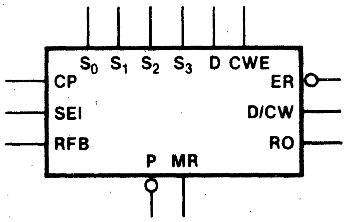
S0 S1 S2 S3 D CWE
CP
SEI
RFB
ER
D/CW
RO
P MR

Input Loading/Fan-Out

Pin Names	Description	54F/74F(U.L.) HIGH/LOW
S_0-S_3	Polynomial Select Inputs	0.5/0.25
CWG	Check Word Generate Input	0.5/0.25
D/CW	Serial Data/Check Word	10/5(2.5)
D	Data Input	0.5/0.25
$\overline{ER}$	Error Output	*/10(5)
RO	Register Output	10/5(2.5)
CP	Clock Pulse	0.5/0.25
SEI	Serial Expansion Input	0.5/0.25
RFB	Register Feedback	0.5/0.25
MR	Master Reset	0.5/0.25
$\overline{P}$	Preset	0.5/0.25

*Open Collector

Functional Description

The 'F402 Serial Data Polynomial Generator/Checker is an expandable 16-bit programmable device which operates on serial data streams and provides a means of detecting transmission errors. Cyclic encoding and decoding schemes for error detection are based on polynomial manipulation in modulo arithmetic. For encoding, the data stream (message polynomial) is divided by a selected polynomial. This division results in a remainder (or residue) which is appended to the message as check bits. For error checking, the bit stream containing both data and check bits is divided by the same selected polynomial. If there are no detectable errors, this division results in a zero remainder. Although it is possible to choose many generating polynomials of a given degree, standards exist that specify a small number of useful polynomials. The 'F402 implements the polynomials listed in Table 1 by applying the appropriate logic levels to the select pins S_0, S_1, S_2, and S_3.

The 'F402 consists of a 16-bit register, a Read Only Memory (ROM) and associated control circuitry as shown in the Block Diagram. The polynomial control code presented at inputs S_0, S_1, S_2, and S_3 is decoded by the ROM, selecting the desired polynomial or part of a polynomial by establishing shift mode operation on the register with Exclusive OR (XOR) gates at appropriate inputs. To generate the check bits, the data stream is entered via the Data Inputs (D), using the LOW-to-HIGH transition of the Clock Input (CP). This data is gated with the most significant Register Output (RO) via the Register Feedback Input (RFB), and controls the XOR gates. The Check Word Generate (CWG) must be held HIGH while the data is being entered. After the last data bit is entered, the CWG is brought LOW and the check bits are shifted out of the register(s) and appended to the data bits (no external gating is needed).

To check an incoming message for errors, both the data and check bits are entered through the D Input with the CWG Input held HIGH. The Error Output becomes valid after the last check bit has been entered into the 'F402 by a LOW-to-HIGH transition of CP, with the exception of the Ethernet polynomial (see Applications paragraph). If no detectable errors have occurred during the data transmission, the resultant internal register bits are all LOW and the Error Output ($\overline{ER}$) is HIGH. If a detectable error has occurred, $\overline{ER}$ is LOW. $\overline{ER}$ remains valid until the next LOW-to-HIGH transition of CP or until the device has been preset or reset.

A HIGH on the Master Reset Input (MR) asynchronously clears the entire register. A LOW on the Preset Input ($\overline{P}$) asynchronously sets the entire register with the exception of:

1) The Ethernet residue selection, in which the registers containing the non-zero residue are cleared;
2) The 56th order polynomial, in which the 8 least significant register bits of the least significant device are cleared; and,
3) Register $S = 0$, in which all bits are cleared.

Block Diagram

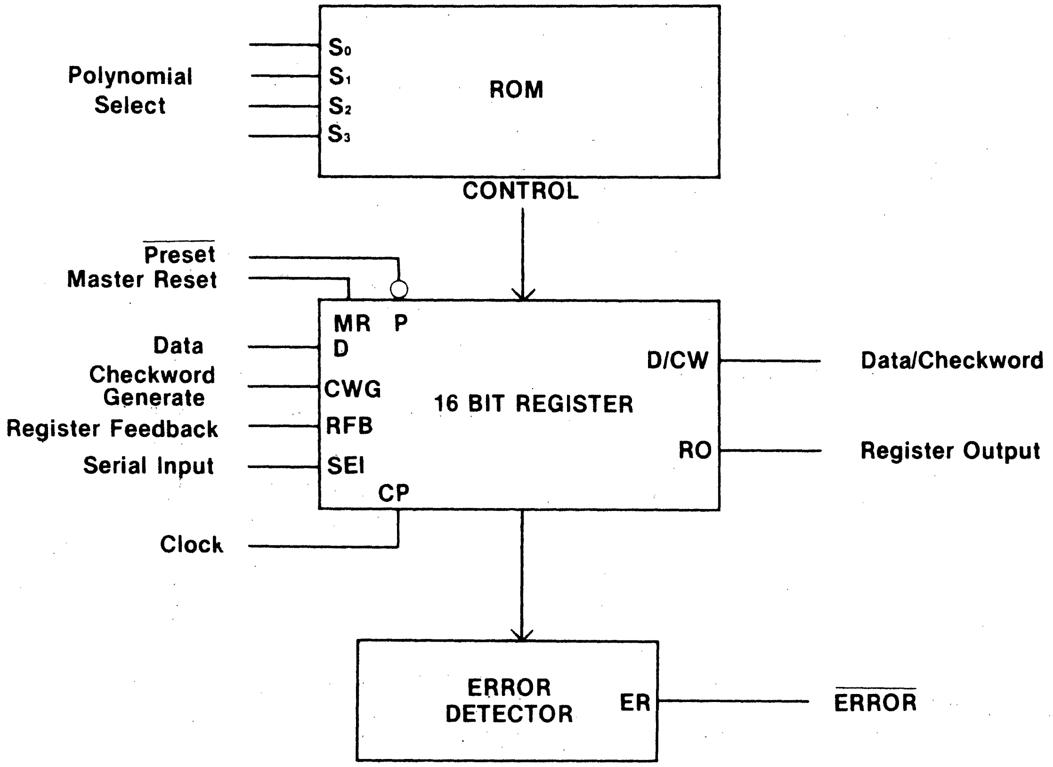
Polynomial
Select
S_0
S_1
S_2
S_3
ROM
CONTROL
$\overline{\text{Preset}}$
Master Reset
MR
P
Data
D
Checkword
Generate
CWG
Register Feedback
RFB
Serial Input
SEI
CP
Clock
16 BIT REGISTER
D/CW
Data/Checkword
RO
Register Output
ERROR
DETECTOR
ER
$\overline{\text{ERROR}}$

Table 1

Hex	Select Code S_3	S_2	S_1	S_0	Polynomial	Remarks
0	L	L	L	L	0	S = 0
C	H	H	L	L	$X^{32}+X^{26}+X^{23}+X^{22}+X^{16}+$	Ethernet
D	H	H	L	H	$X^{12}+X^{11}+X^{10}+X^{8}+X^{7}+X^{5}+X^{4}+X^{2}+X+1$	Polynomial
E	H	H	H	L	$X^{32}+X^{31}+X^{27}+X^{26}+X^{25}+X^{19}+X^{16}+$	Ethernet
F	H	H	H	H	$X^{15}+X^{13}+X^{12}+X^{11}+X^{9}+X^{7}+X^{6}+X^{5}+X^{4}+X^{2}+X+1$	Residue
7	L	H	H	H	$X^{16}+X^{15}+X^{2}+1$	CRC-16
B	H	L	H	H	$X^{16}+X^{12}+X^{5}+1$	CRC-CCITT
3	L	L	H	H	$X^{56}+X^{55}+X^{49}+X^{45}+X^{41}+$	
2	L	L	H	L	$X^{39}+X^{38}+X^{37}+X^{36}+X^{31}+$	56th
4	L	H	L	L	$X^{22}+X^{19}+X^{17}+X^{16}+X^{15}+X^{14}+X^{12}+X^{11}+X^{9}+$	Order
8	H	L	L	L	$X^{5}+X+1$	
5	L	H	L	H	$X^{48}+X^{36}+X^{35}+$	48th
9	H	L	L	H	$X^{23}+X^{21}+$	Order
1	L	L	L	H	$X^{15}+X^{13}+X^{8}+X^{2}+1$	
6	L	H	H	L	$X^{32}+X^{23}+X^{21}+$	32nd
A	H	L	H	L	$X^{11}+X^{2}+1$	Order

Table 2

Select Code	P_3	P_2	P_1	P_0	C_2	C_1	C_0	Polynomial
0	0	0	0	0	1	0	0	S = 0
C	1	1	1	1	1	0	1	Ethernet
D	1	1	1	1	1	0	1	Polynomial
E	0	0	0	0	0	0	0	Ethernet
F	0	0	0	0	0	1	0	Residue
7	1	1	1	1	1	0	0	CRC-16
B	1	1	1	1	1	0	0	CRC-CCITT
3	1	1	1	1	1	0	0	
2	1	1	1	1	1	0	0	56th
4	1	1	1	1	1	0	0	Order
8	0	0	1	1	1	0	0	
5	1	1	1	1	1	0	0	48th
9	1	1	1	1	1	0	0	Order
1	1	1	1	1	1	0	0	
6	1	1	1	1	1	0	0	32nd
A	1	1	1	1	1	0	0	Order

DC Characteristics over Operating Temperature Range (unless otherwise specified)

Symbol	Parameter	54F/74F			Units	Conditions
		Min	Typ	Max		
I_{CC}	Power Supply Current		110	165	mA	$V_{CC} = \text{Max}$

AC Characteristics

Symbol	Parameter	54F/74F			54F		74F		Units
		$T_A = +25°C$ $V_{CC} = +5.0\ V$ $C_L = 50\ pF$			T_A, V_{CC} = Mil $C_L = 50\ pF$		T_A, V_{CC} = Com $C_L = 50\ pF$		
		Min	Typ	Max	Min	Max	Min	Max	
f_{max}	Maximum Clock Frequency	30	45				30		MHz
t_{PLH} t_{PHL}	Propagation Delay CP to D/CW	8.5 10.5	15.0 18.0	19.0 23.0			9.5 9.0	21.0 24.0	ns
t_{PLH} t_{PHL}	Propagation Delay CP to RO	8.0 8.0	13.5 14.0	17.0 18.0			7.0 7.0	19.0 20.0	ns
t_{PLH} t_{PHL}	Propagation Delay CP to $\overline{ER}$	15.5 8.5	26.0 14.5	33.0 18.5			13.5 7.5	35.0 20.5	ns
t_{PLH} t_{PHL}	Propagation Delay $\overline{P}$ to D/CW	11.0 11.5	18.5 19.5	23.5 24.5			9.5 10.0	25.5 26.5	ns
t_{PLH}	Propagation Delay $\overline{P}$ to RO	9.5	16.0	20.5			8.5	22.5	ns
t_{PLH}	Propagation Delay $\overline{P}$ to $\overline{ER}$	10.0	17.0	21.5			9.0	23.5	ns
t_{PLH} t_{PHL}	Propatation Delay MR to D/CW	10.5 11.0	18.0 19.0	23.0 24.0			9.5 10.0	25.0 26.0	ns
t_{PHL}	Propagation Delay MR to RO	9.0	15.5	19.5			8.0	21.5	ns
t_{PLH}	Propagation Delay MR to $\overline{ER}$	16.5	28.0	35.5			14.5	37.5	ns
t_{PLH} t_{PHL}	Propagation Delay D to D/CW	6.0 7.5	10.5 12.0	13.5 16.0			5.0 6.5	15.0 18.0	ns
t_{PLH} t_{PHL}	Propagation Delay CWG to D/CW	6.5 7.0	11.0 12.0	14.0 15.5			5.5 6.0	15.5 17.5	ns
t_{PLH} t_{PHL}	Propagation Delay S_n to D/CW	11.5 9.5	19.5 16.0	24.5 20.0			10.5 8.5	26.5 22.0	ns

For information on waveforms, see Section 3 of the 1985 FAST Data Book.

AC Operating Requirements

Symbol	Parameter	54F/74F			54F		74F		Units
		$T_A = +25°C$ $V_{CC} = +5.0\ V$			T_A, V_{CC} = Mil		T_A, V_{CC} = Com		
		Min	Typ	Max	Min	Max	Min	Max	
$t_s(H)$	Set up Time, HIGH or LOW	4.5					5.0		ns
$t_s(L)$	SEI to CP	4.5					5.0		
$t_h(H)$	Hold Time, HIGH or LOW	0					0		
$t_h(L)$	SEI to CP	0					0		
$t_s(H)$	Set up Time, HIGH or LOW	11.0					12.0		ns
$t_s(L)$	RFB to CP	11.0					12.0		
$t_h(H)$	Hold Time, HIGH or LOW	0					0		
$t_h(L)$	RFB to CP	0					0		
$t_s(H)$	Set up Time, HIGH or LOW	13.5					15.0		ns
$t_s(L)$	S_1 to CP	13.0					14.5		
$t_h(H)$	Hold Time, HIGH or LOW	0					0		
$t_h(L)$	S_1 to CP	0					0		
$t_s(H)$	Set up Time, HIGH or LOW	9.0					10.0		ns
$t_s(L)$	D to CP	9.0					10.0		
$t_h(H)$	Hold Time, HIGH or LOW	0					0		
$t_h(L)$	D to CP	0					0		
$t_s(H)$	Set up Time, HIGH or LOW	7.0					8.0		ns
$t_s(L)$	CWG to CP	5.5					6.5		
$t_h(H)$	Hold Time, HIGH or LOW	0					0		
$t_h(L)$	CWG to CP	0					0		
$t_w(H)$	Clock Pulse Width	4.0					4.5		ns
$t_w(L)$	HIGH or LOW	4.0					4.5		
$t_w(H)$	MR Pulse Width, HIGH	4.0					4.5		ns
$t_w(L)$	$\overline{P}$ Pulse Width, LOW	4.0					4.5		ns
t_{rec}	Recovery Time MR to CP	3.0					2.5		ns
t_{rec}	Recovery Time $\overline{P}$ to CP	5.0					6.0		

For information on waveforms, see Section 3 of the 1985 FAST Data Book.

Applications

In addition to polynomial selection there are four other capabilities provided for in the 'F402 ROM. The first is set or clear selectability. The sixteen internal registers have the capability to be either set or cleared when $\overline{P}$ is brought LOW. This set or clear capability is done in four groups of 4 (see Table 2, P_0-P_3). The second ROM capability (C_0) is in determining the polarity of the check word. As is the case with the Ethernet polynomial the check word can be inverted when it is appended to the data stream or as is the case with the other polynomials, the residue is appended with no inversion. Thirdly, the ROM contains a bit (C_1) which is used to select the RFB input instead of the SEI input to be fed into the LSB. This is used when the polynomial selected is actually a residue (least significant) stored in the ROM which indicates whether the selected location is a polynomial or a residue. If the latter, then it inhibits the RFB input.

As mentioned previously, upon a successful data transmission, the CRC register has a zero residue. There is an exception to this, however, with respect to the Ethernet polynomial. This polynomial, upon a successful data transmission, has a non-zero residue in the CRC register $(C7\ 04\ DD\ 7B)_{16}$. In order to provide a no-error indication, two ROM locations have been preloaded with the residue so that by selecting these locations and clocking the device one additional time, after the last check bit has been entered, will result in zeroing the CRC register. In this manner a no-error indication is achieved.

With the present mix of polynomials, the largest is 56th order requiring four devices while the smallest is 16th order requiring just one device. In order to accommodate multiplexing between high order polynomials (X 16th order) and lower order polynomials, a location of all zeros is provided. This allows the user to choose a lower order polynomial even if the system is configured for a higher order one.

The 'F402 expandable CRC generator checker contains 6 popular CRC polynomials, 2-16th Order, 2-32nd Order, 1-48th Order and 1-56th Order. The application diagram shows the 'F402 connected for a 56th Order polynomial. Also shown are the input patterns for other polynomials. When the 'F402 is used with a gated clock, disabling the clock in a HIGH state will ensure no erroneous clocking occurs when the clock is re-enabled. Preset and Master Reset are asynchronous inputs presetting the register to S or clearing to 0s respectively (note Ethernet residue and 56th Order select code 8, LSB, are exceptions to this).

To generate a CRC, the pattern for the selected polynomial is applied to the S inputs, the register is preset or cleared as required, clock is enabled, CWG is set HIGH, data is applied to D input, output data is on D/CW. When the last data bit has been entered, CWG is set LOW and the register is clocked for n bits (where n is the order of the polynomial). The clock may now be stopped if desired (holding CWG LOW and clocking the register will output zeros from D/CW after the residue has been shifted out).

To check a CRC, the pattern for the selected polynomial is applied to the S inputs, the register is preset or cleared as required, clock is enabled, CWG is set HIGH, the data stream including the CRC is applied to D input. When the last bit of the CRC has been entered, the $\overline{ER}$ output is checked: HIGH = error free data, LOW = corrupt data. The clock may now be stopped if desired.

To implement polynomials of lower order than 56th, select the number of packages required for the order of polynomial and apply the pattern for the selected polynomial to the S inputs (0000 on S inputs disables the package from the feedback chain).

Applications

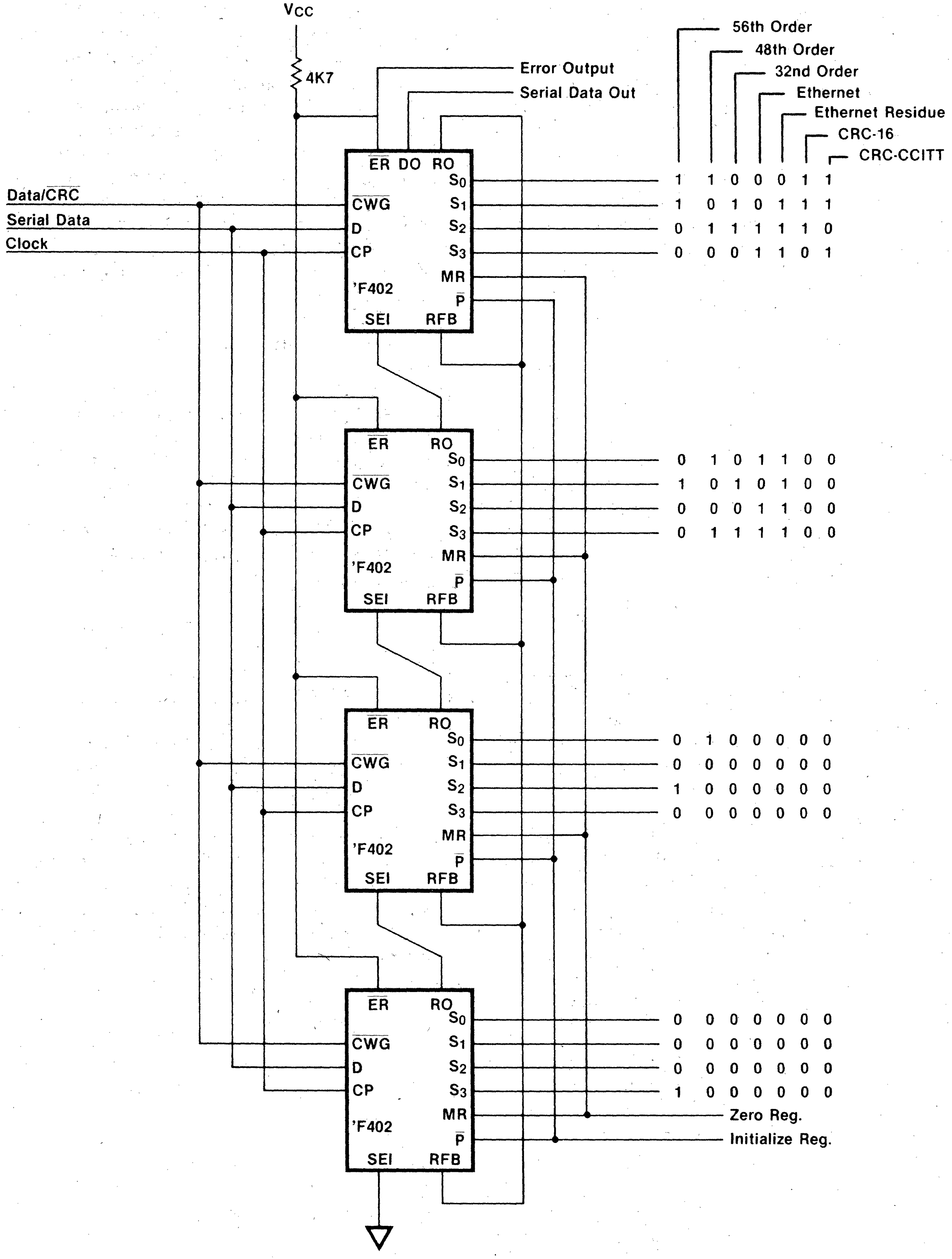
VCC
4K7
Error Output
Serial Data Out
56th Order
48th Order
32nd Order
Ethernet
Ethernet Residue
CRC-16
CRC-CCITT
Data/CRC
Serial Data
Clock
ER DO RO
S0
S1
S2
S3
MR
P
RFB
SEI
CWG
D
CP
'F402
ER
RO
1 1 0 0 0 1 1
1 0 1 0 1 1 1
0 1 1 1 1 1 0
0 0 0 1 1 0 1
0 1 0 1 1 0 0
1 0 1 0 1 0 0
0 0 0 1 1 0 0
0 1 1 1 1 0 0
0 1 0 0 0 0 0
0 0 0 0 0 0 0
1 0 0 0 0 0 0
0 0 0 0 0 0 0
0 0 0 0 0 0 0
0 0 0 0 0 0 0
0 0 0 0 0 0 0
1 0 0 0 0 0 0
Zero Reg.
Initialize Reg.

54F/74F407

Data Access Register

Description

The 'F407 Data Access Register (DAR) performs memory address arithmetic for RAM resident stack applications. It contains three 4-bit registers intended for Program Counter (R_0), Stack Pointer (R_1), and Operand Address (R_2). The 'F407 implements 16 instructions which allow either pre or post decrement/increment and register-to-register transfer in a single clock cycle. It is expandable in 4-bit increments and can operate at a 30 MHz microinstruction rate on a 16-bit word. The 3-state outputs are provided for bus-oriented applications. The 'F407 is fully compatible with all TTL families.

- **High-Speed—Greater than a 30 MHz Microinstruction Rate**
- **Three 4-Bit Registers**
- **Sixteen Instructions for Register Manipulation**
- **Two Separate Output Ports, One Transparent**
- **Relative Addressing Capability**
- **3-State Outputs**
- **Optional Pre or Post Arithmetic**
- **Expandable in Multiples of Four Bits**
- **24-Pin Slim Package**

Connection Diagrams

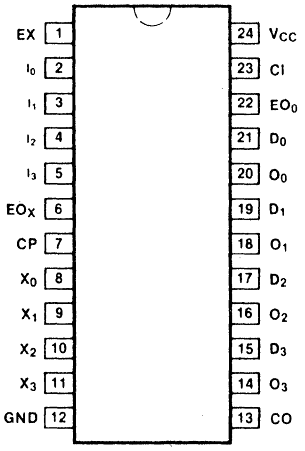
EX 1
I0 2
I1 3
I2 4
I3 5
EOx 6
CP 7
X0 8
X1 9
X2 10
X3 11
GND 12
24 VCC
23 CI
22 EO0
21 D0
20 O0
19 D1
18 O1
17 D2
16 O2
15 D3
14 O3
13 CO

Pin Assignment for DIP and SOIC

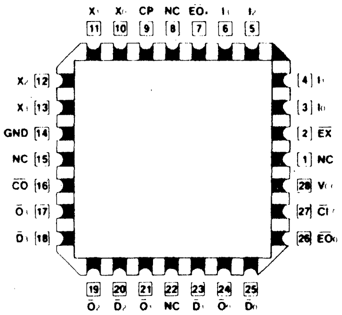
X 11
X 10
CP 9
NC 8
EO 7
I 6
I 5
X 12
X 13
GND 14
NC 15
CO 16
O 17
D 18
4 I
3 I0
2 EX
1 NC
28 V
27 CI
26 EO
19 O
20 D
21 O
22 NC
23 D
24 O
25 D

Pin Assignment for LCC and PCC

Logic Symbol

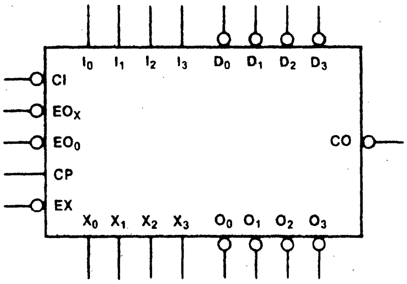
I0
I1
I2
I3
D0
D1
D2
D3
CI
EOX
EO0
CP
EX
CO
X0
X1
X2
X3
O0
O1
O2
O3

Input Loading/Fan-Out

Pin Names	Description	54F/74F(U.L.) HIGH/LOW
$\overline{D}_0$-$\overline{D}_3$	Data Inputs (Active LOW)	0.5/0.225
I_0-I_3	Instruction Word Inputs	0.5/0.225
$\overline{CI}$	Carry Input (Active LOW)	0.5/0.225
$\overline{CO}$	Carry Output (Active LOW)	10/5 (2.5)
CP	Clock Input (L-H Edge-Triggered)	0.5/0.225
$\overline{EX}$	Execute Input (Active LOW)	0.5/0.225
$\overline{EO}_X$	Address Output Enable Input (Active LOW)	0.5/0.225
$\overline{EO}_0$	Data Output Enable Input (Active LOW)	0.5/0.225
X_0-X_3	Address Outputs	142.5 (50)/10 (5)
$\overline{O}_0$-$\overline{O}_3$	Data Outputs (Active LOW)	142.5 (50)/10 (5)

Block Diagram

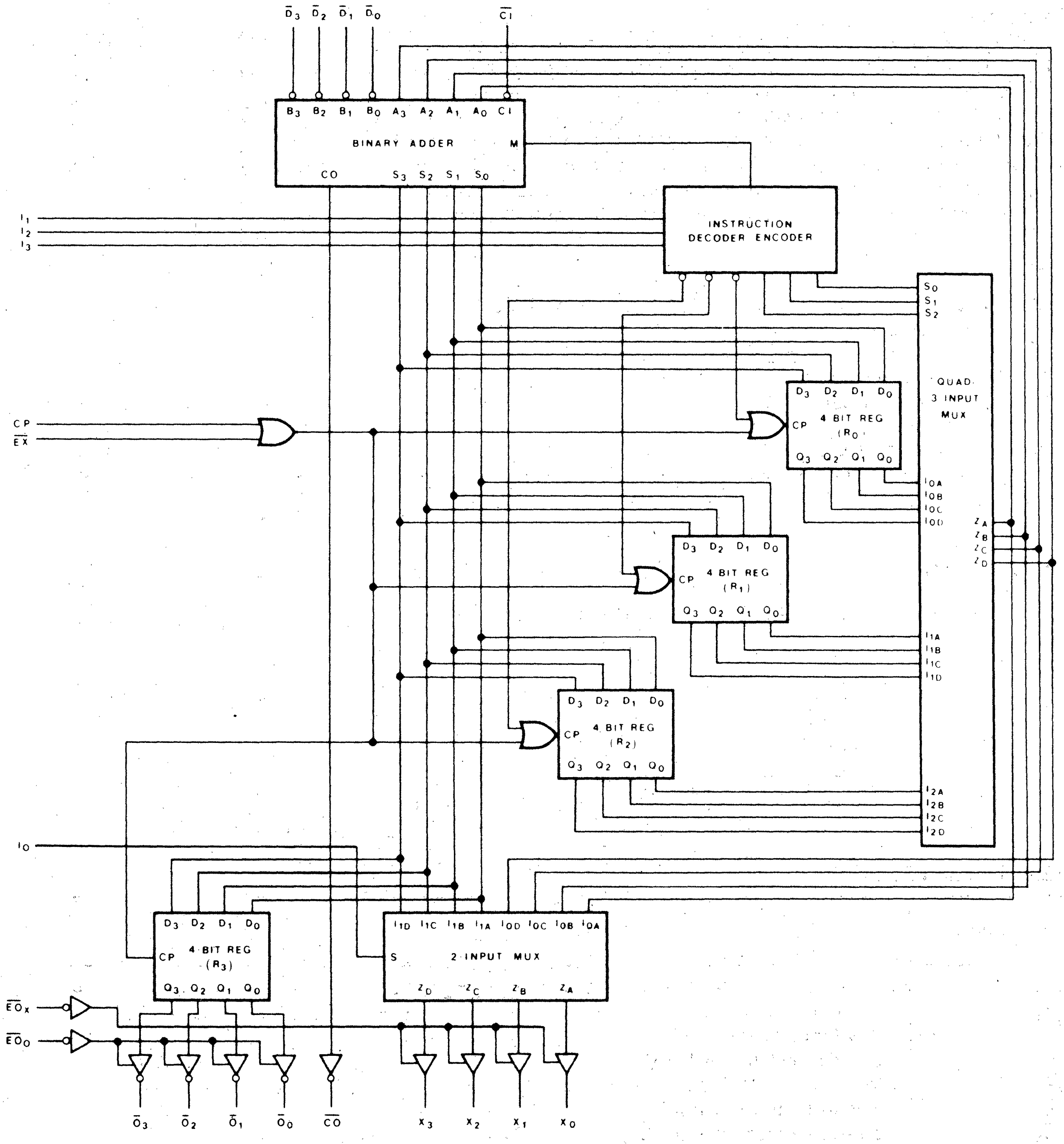
$\overline{D}_3$ $\overline{D}_2$ $\overline{D}_1$ $\overline{D}_0$
$\overline{CI}$
B_3 B_2 B_1 B_0 A_3 A_2 A_1 A_0 CI
BINARY ADDER
M
CO
S_3 S_2 S_1 S_0
I_1
I_2
I_3
INSTRUCTION DECODER ENCODER
S_0
S_1
S_2
QUAD 3 INPUT MUX
D_3 D_2 D_1 D_0
CP
4 BIT REG (R_0)
Q_3 Q_2 Q_1 Q_0
CP
$\overline{EX}$
I_{0A}
I_{0B}
I_{0C}
I_{0D}
Z_A
Z_B
Z_C
Z_D
4 BIT REG (R_1)
I_{1A}
I_{1B}
I_{1C}
I_{1D}
4 BIT REG (R_2)
I_{2A}
I_{2B}
I_{2C}
I_{2D}
I_0
4 BIT REG (R_3)
I_{1D} I_{1C} I_{1B} I_{1A} I_{0D} I_{0C} I_{0B} I_{0A}
S
2 INPUT MUX
Z_D Z_C Z_B Z_A
$\overline{EO}_X$
$\overline{EO}_0$
$\overline{O}_3$ $\overline{O}_2$ $\overline{O}_1$ $\overline{O}_0$ $\overline{CO}$
X_3 X_2 X_1 X_0

Functional Description

The 'F407 contains a 4-bit slice of three Registers (R_0-R_2), a 4-bit Adder, a 3-state Address Output Buffer (X_0-X_3) and a separate Output Register with 3-state buffers ($\overline{O}_0$-$\overline{O}_3$), allowing output of the register contents on the data bus (refer to the Block Diagram). The DAR performs sixteen instructions, selected by I_0-I_3, as listed in the Function Table.

The 'F407 operates on a single clock. CP and $\overline{EX}$ are inputs to a 2-input, active LOW AND gate. For normal operation $\overline{EX}$ is brought LOW while CP is HIGH. A microcycle starts as the clock goes HIGH. Data inputs $\overline{D}_0$-$\overline{D}_3$ are applied to the Adder as one of the operands. Three of the four instruction lines (I_1-I_2-I_3) select which of the three registers, if any, is to be used as the other operand. The LOW-to-HIGH CP transition writes the result from the Adder into a register (R_0-R_2) and into the output register provided $\overline{EX}$ is LOW. If the I_0 instruction input is HIGH, the multiplexer routes the result from the Adder to the 3-state Buffer controlling the address bus (X_0-X_3), independent of $\overline{EX}$ and CP. The 'F407 is organized as a 4-bit register slice. The active LOW $\overline{CI}$ and $\overline{CO}$ lines allow ripple-carry expansion over longer word lengths.

In a typical application, the register utilization in the DAR may be as follows: R_0 is the Program Counter (PC), R_1 is the Stack Pointer (SP) for memory resident stacks and R_2 contains the operand address. For an instruction Fetch, PC can be gated on the X-Bus while it is being incremented (i.e. D-Bus = 1). If the fetched instruction calls for an effective address for execution, which is displaced from the PC, the displacement can be added to the PC and loaded into R_2 during the next microcycle.

Function Table

Instruction				Combinatorial Function Available on the X-Bus	Sequential Function Occurring on the Next Rising CP Edge
I_3	I_2	I_1	I_0		
L	L	L	L	R_0	R_0 plus D plus CI→R_0 and 0-register
L	L	L	H	R_0 plus D plus CI	
L	L	H	L	R_0	R_0 plus D plus CI→R_1 and 0-register
L	L	H	H	R_0 plus D plus CI	
L	H	L	L	R_0	R_0 plus D plus CI→R_2 and 0-register
L	H	L	H	R_0 plus D plus CI	
L	H	H	L	R_1	R_1 plus D plus CI→R_1 and 0-register
L	H	H	H	R_1 plus D plus CI	
H	L	L	L	R_2	D plus CI→R_2 and 0-register
H	L	L	H	D plus CI	
H	L	H	L	R_0	D plus CI→R_0 and 0-register
H	L	H	H	D plus CI	
H	H	L	L	R_2	R_2 plus D plus CI→R_2 and 0-register
H	H	L	H	R_2 plus D plus CI	
H	H	H	L	R_1	D plus CI→R_1 and 0-register
H	H	H	H	D plus CI	

H = HIGH Voltage Level
L = LOW Voltage Level

DC Characteristics over Operating Temperature Range (unless otherwise specified)

Symbol	Parameter	54F/74F			Units	Conditions
		Min	Typ	Max		
I_{CC}	Supply Current		90	145	mA	V_{CC} = Max, Inputs Open

AC Characteristics

Symbol	Parameter	54F/74F			54F		74F		Units
		T_A = +25°C V_{CC} = +5.0 V C_L = 50 pF			T_A, V_{CC} = Mil C_L = 50 pF		T_A, V_{CC} = Com C_L = 50 pF		
		Min	Typ	Max	Min	Max	Min	Max	
t_{PLH} t_{PHL}	Propagation Delay CP to $\overline{O}_n$ (Note)	8.0 5.0	12.0 7.5	16.0 9.5			7.0 4.0	18.0 10.5	ns
t_{PLH} t_{PHL}	Propagation Delay, I_0 LOW I_1-I_3 to X_0-X_3	9.0 9.5	13.0 14.0	17.0 18.0			8.0 8.5	19.0 20.0	ns
t_{PLH} t_{PHL}	Propagation Delay, I_0 HIGH I_1-I_3 to X_0-X_3	16.5 11.0	23.5 17.0	30.5 22.5			14.5 10.0	32.5 24.5	ns
t_{PLH} t_{PHL}	Propagation Delay, I_0 LOW CP to X_n	9.0 11.5	13.5 18.0	17.5 24.0			8.0 10.5	19.5 26.0	ns
t_{PLH} t_{PHL}	Propagation Delay, I_0 HIGH CP to X_n	18.0 12.5	26.5 20.0	35.0 28.5			16.0 11.5	37.0 30.5	ns
t_{PLH} t_{PHL}	Propagation Delay $\overline{D}_n$ to X_n	10.5 6.0	15.0 9.0	19.5 12.0			9.5 5.0	21.5 13.0	ns
t_{PLH} t_{PHL}	Propagation Delay CI to X_n	7.0 5.5	10.5 9.0	14.0 12.0			6.0 4.5	15.5 13.5	ns
t_{PLH} t_{PHL}	Propagation Delay I_0 to X_n	4.5 4.5	9.0 10.0	11.5 13.0			4.0 4.0	13.0 14.5	ns
t_{PLH} t_{PHL}	Propagation Delay CP to $\overline{CO}$	13.5 13.5	19.0 18.5	24.0 23.5			12.5 12.5	26.0 25.5	ns
t_{PLH} t_{PHL}	Propagation Delay $\overline{CI}$ to $\overline{CO}$	3.5 4.5	5.5 7.0	7.5 9.0			3.0 4.0	8.5 10.0	ns
t_{PLH} t_{PHL}	Propagation Delay $\overline{D}_n$ to $\overline{CO}$	3.5 4.0	5.5 6.5	7.0 9.0			3.0 3.5	8.0 10.0	ns
t_{PLH} t_{PHL}	Propagation Delay I_1-I_3 to $\overline{CO}$	10.0 11.0	15.0 16.0	20.0 21.0			9.0 10.0	22.0 23.0	ns

AC Characteristics (cont'd)

Symbol	Parameter	54F/74F $T_A = +25°C$ $V_{CC} = +5.0$ V $C_L = 50$ pF			54F T_A, V_{CC} = Mil $C_L = 50$ pF		74F T_A, V_{CC} = Com $C_L = 50$ pF		Units
		Min	Typ	Max	Min	Max	Min	Max	
t_{PZH}	Enable Time	7.0	10.0	12.5			6.0	14.0	ns
t_{PZL}	$\overline{EO}$ to $\overline{O}_n$ or $\overline{EO}_x$ to X_n	6.5	9.0	12.0			5.5	13.5	
t_{PHZ}	Disable Time	2.5	4.0	5.5			2.0	6.5	ns
t_{PLZ}	$\overline{EO}_0$ to $\overline{O}_n$ or $\overline{EO}_x$ to X_n	7.0	10.0	13.0			6.0	14.5	

Note: The internal clock is generated from CP and $\overline{EX}$. The internal Clock is HIGH if $\overline{EX}$ or CP is HIGH, LOW if $\overline{EX}$ and CP are LOW.

For information on waveforms, see Section 3 of the 1985 FAST Data Book.

AC Operating Requirements

Symbol	Parameter	54F/74F $T_A = +25°C$ $V_{CC} = +5.0$ V			54F T_A, V_{CC} = Mil		74F T_A, V_{CC} = Com		Units
		Min	Typ	Max	Min	Max	Min	Max	
t_{cw}	Clock Period	32.0	26.0				36.0		ns
$t_s(H)$	Set-Up Time, HIGH or LOW	4.0					4.5		ns
$t_s(L)$	I_1-I_3 to negative going CP	4.0					4.5		
$t_h(H)$	Hold Time, High or LOW	0					0		
$t_h(L)$	I_1-I_3 to positive-going CP	0					0		
$t_s(H)$	Set-Up Time, HIGH or LOW	16.5					18.5		ns
$t_s(L)$	$\overline{D}_n$ or $\overline{C}_1$ to negative-going CP	16.5					18.5		
$t_h(H)$	Hold Time, HIGH or LOW	0					0		
$t_h(L)$	$\overline{D}_n$ or $\overline{CI}$ to negative-going clock	0					0		
$t_s(H)$	Set-Up Time, HIGH or LOW	13.0					14.5		ns
$t_s(L)$	$\overline{CI}$ to positive-going CP	13.0					14.5		
$t_h(H)$	Hold Time, HIGH or LOW	0					0		
$t_h(L)$	$\overline{CI}$ to positive-going CP	0					0		
$t_w(H)$	Clock Pulse Width	7.5					8.5		ns
$t_w(L)$	HIGH or LOW	7.5					8.5		

For information on waveforms, see Section 3 of the 1985 FAST Data Book.

Timing Diagrams

Fig. 407-a

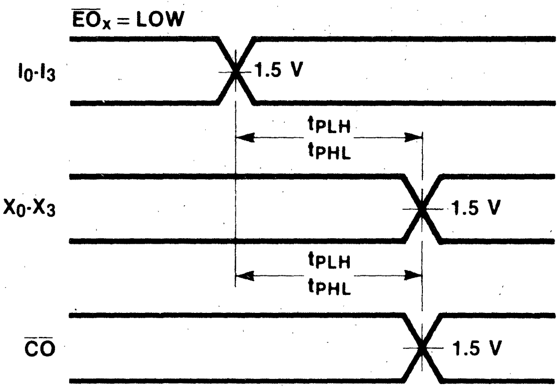
$\overline{EO}_x$ = LOW
I_0-I_3
1.5 V
t_{PLH}
t_{PHL}
X_0-X_3
1.5 V
t_{PLH}
t_{PHL}
$\overline{CO}$
1.5 V

Fig. 407-b

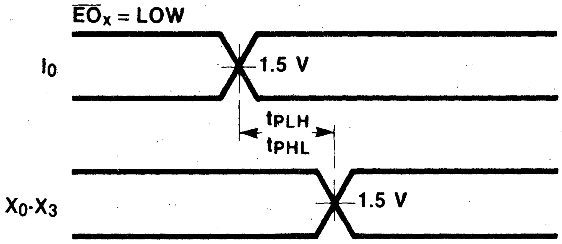
$\overline{EO}_x$ = LOW
I_0
1.5 V
t_{PLH}
t_{PHL}
X_0-X_3
1.5 V

Fig. 407-c

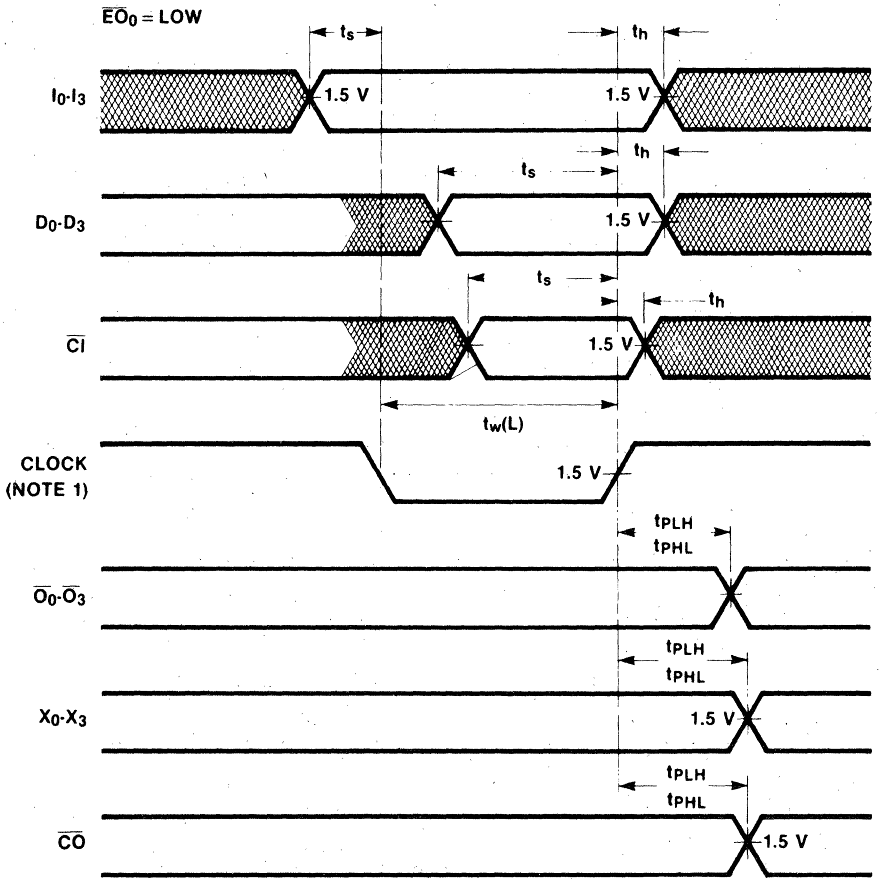
$\overline{EO}_0$ = LOW
t_s
t_h
I_0-I_3
1.5 V
1.5 V
t_h
t_s
D_0-D_3
1.5 V
t_s
t_h
$\overline{CI}$
1.5 V
$t_w(L)$
CLOCK
(NOTE 1)
1.5 V
t_{PLH}
t_{PHL}
$\overline{O}_0$-$\overline{O}_3$
t_{PLH}
t_{PHL}
X_0-X_3
1.5 V
t_{PLH}
t_{PHL}
$\overline{CO}$
1.5 V

Fig. 407-d

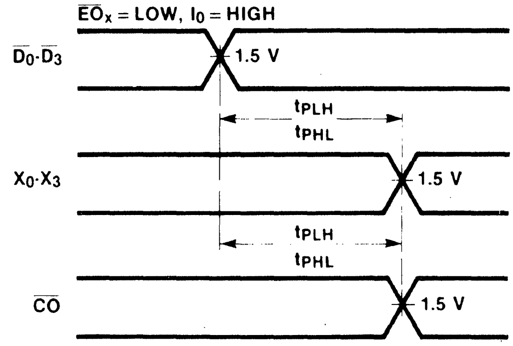
$\overline{EO}_x$ = LOW, I_0 = HIGH
$\overline{D}_0$-$\overline{D}_3$
1.5 V
t_{PLH}
t_{PHL}
X_0-X_3
1.5 V
t_{PLH}
t_{PHL}
$\overline{CO}$
1.5 V

Fig. 407-e

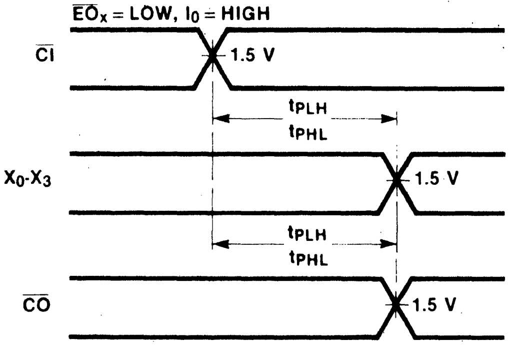
$\overline{EO}_x$ = LOW, I_0 = HIGH
$\overline{CI}$
1.5 V
t_{PLH}
t_{PHL}
X_0-X_3
1.5 V
t_{PLH}
t_{PHL}
$\overline{CO}$
1.5 V

54F/74F525

Programmable Counter

Description

The 'F525 is a multi-function 28-pin device. It consists of a 16-bit count-down counter, logic to control the counter, logic to control the state of the outputs and a PLA to decode the particular function selected by the user. The list of high-speed timing applications include:

- Baud Rate Generator
- Digitally Programmed Monostable
- Variable System Frequency Generator
- Digital Filter Variable Sampling Rate

Logic Symbol

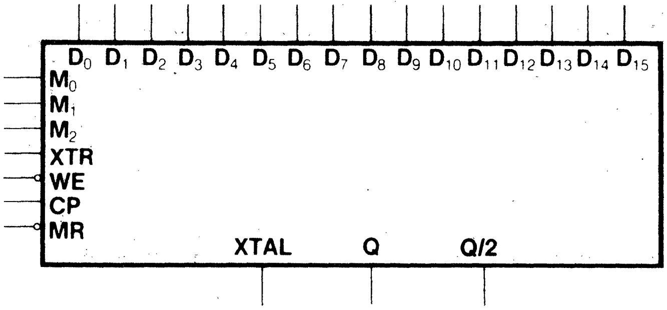
D_0 D_1 D_2 D_3 D_4 D_5 D_6 D_7 D_8 D_9 D_{10} D_{11} D_{12} D_{13} D_{14} D_{15}
M_0
M_1
M_2
XTR
WE
CP
MR
XTAL
Q
Q/2

Connection Diagrams

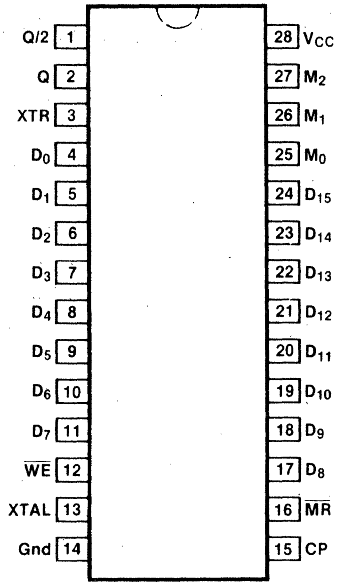
Q/2 1
Q 2
XTR 3
D_0 4
D_1 5
D_2 6
D_3 7
D_4 8
D_5 9
D_6 10
D_7 11
$\overline{WE}$ 12
XTAL 13
Gnd 14
28 V_{CC}
27 M_2
26 M_1
25 M_0
24 D_{15}
23 D_{14}
22 D_{13}
21 D_{12}
20 D_{11}
19 D_{10}
18 D_9
17 D_8
16 $\overline{MR}$
15 CP

Pin Assignment for DIP and SOIC

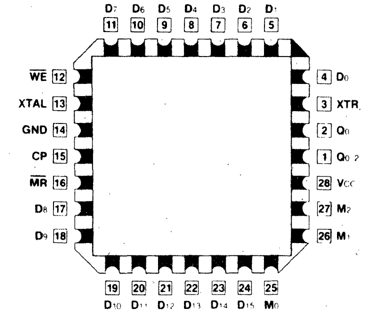
D_7 11
D_6 10
D_5 9
D_4 8
D_3 7
D_2 6
D_1 5
$\overline{WE}$ 12
XTAL 13
GND 14
CP 15
$\overline{MR}$ 16
D_8 17
D_9 18
4 D_0
3 XTR
2 Q_0
1 $Q_0/2$
28 V_{CC}
27 M_2
26 M_1
19 D_{10}
20 D_{11}
21 D_{12}
22 D_{13}
23 D_{14}
24 D_{15}
25 M_0

Pin Assignment for LCC and PCC

Input Loading/Fan-Out

Pin Names	Description	54F/74F(U.L.) HIGH/LOW
Q	Output (Primarily indicates when the counter has reached zero)	25/12.5
Q/2	Output (Divides Q by 2)	25/12.5
M_0-M_2	Status Inputs	0.5/0.375
$\overline{MR}$	Master Reset	0.5/0.375
CP	Clock Pulse	0.5/0.375
D_0-D_{15}	Data Inputs	0.5/0.375
$\overline{WE}$	Write Enable	0.5/0.375
XTR	External Trigger	0.5/0.375
XTAL	Crystal	0.5/0.375

Functional Description

The multi-function aspect of the device consists of eight different modes of operation. An explanation of the operation of the device in each of the modes follows. However, there is one operation that is independent of the selected mode, the loading of data. Data is latched into a set of data latches when $\overline{WE}$ is brought from a LOW to a HIGH state. The latches are transparent when $\overline{WE}$ is held LOW.

MODE 0

While XTR is HIGH, the data in the data latches is loaded into the counter upon the next positive-edge of CP. The negative-edge of XTR enables the count-down to begin with the next positive-edge of CP. When the count reaches zero, Q is brought HIGH and Q/2 toggles state. Taking XTR HIGH at any time causes the data in the latches to be loaded into the counter and the Q output to be cleared.

MODE 1

The operation is exactly the same as in mode 0 except that Q is normally HIGH and goes LOW on a count of zero. Q/2 toggles on the negative-edge of Q.

MODE 2

While XTR is HIGH, the data in the data latches is loaded into the counter upon the next positive-edge of CP. The negative-edge of XTR enables the count-down to begin with the next positive-edge of CP. When the count reaches zero, Q is brought HIGH for a single period of CP. Q/2 toggles state on the positive-edge of Q. Taking XTR HIGH at any time causes the data in the latches to be loaded into the counter and the Q output to be cleared.

MODE 3

The operation is exactly the same as in mode 2 except that Q is normally HIGH and goes LOW on a count of zero for a single period of CP. Q/2 toggles on the negative-edge of Q.

MODE 4

While XTR is HIGH, the data in the data latches is loaded into the counter upon the next positive-edge of CP. The negative-edge of XTR enables the count-down to begin with the next positive-edge of CP. When the count reaches zero, Q is brought HIGH for a single period of CP. Q/2 toggles state on the positive-edge of Q. Taking XTR HIGH before the counters reach zero causes the data currently in the counters to be held.

MODE 5

The operation is exactly the same as in Mode 4 except that Q is normally HIGH and goes LOW on a count of zero. Q/2 toggles on the negative-edge of Q.

MODE 6

While XTR is HIGH, the data in the data latches is loaded into the counter upon the next positive-edge of CP. The negative-edge of XTR enables both the count-down to begin and Q to go HIGH with the next positive-edge of CP. Q is brought LOW when the count reaches zero. Q/2 toggles on the positive-edge of CP. Bringing XTR HIGH during a count-down will reload the latched data into the counter, but will not affect Q.

MODE 7

The negative-edge of XTR enables the count-down to begin with the next positive-edge of CP. When the count reaches zero, Q is brought HIGH for a single period of CP. Q/2 toggles state on the positive-edge of Q. The positive-edge of CP upon which Q goes low also causes the data in the data latches to be reloaded into the counters. Taking XTR HIGH at any time causes the data in the data latches to be loaded into the counter and the Q output to be cleared. However, after an initial XTR this mode can run continuously until stopped by MR.

Block Diagram

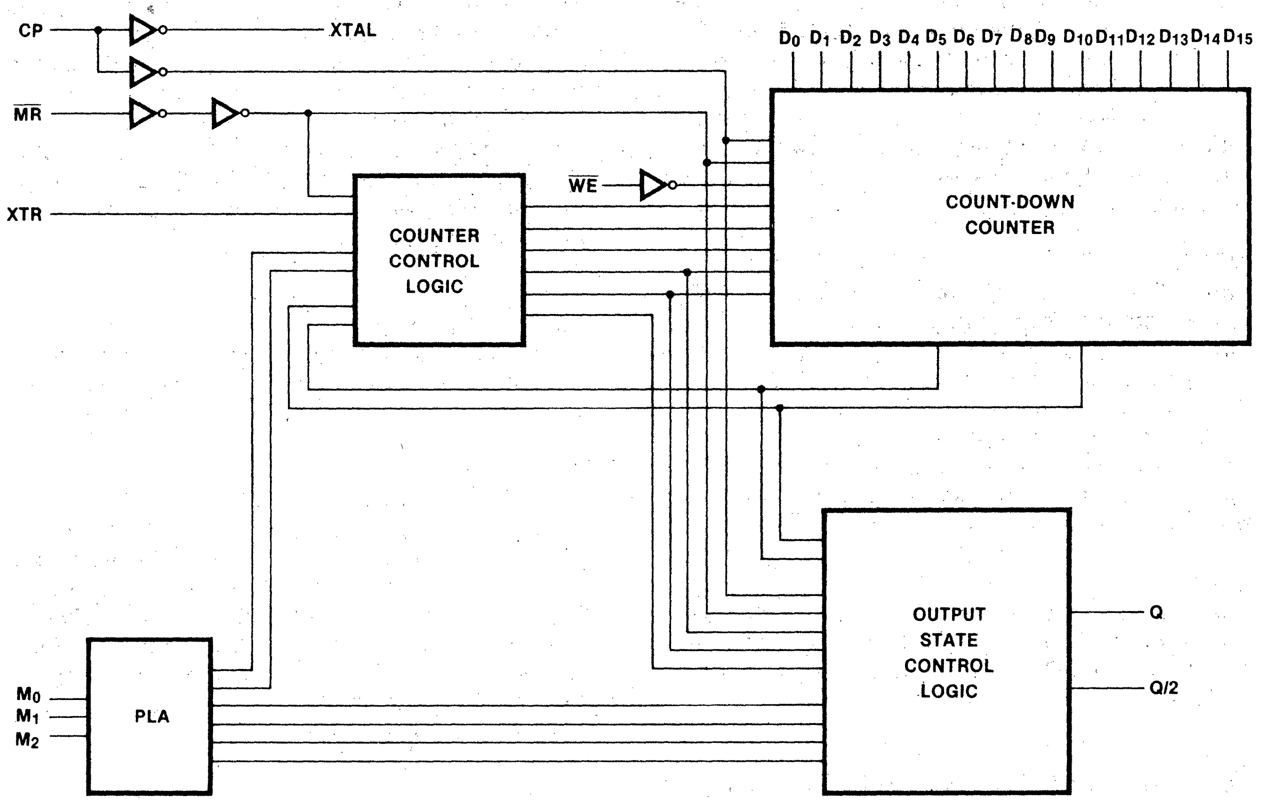
CP
XTAL
MR
XTR
WE
COUNTER CONTROL LOGIC
COUNT-DOWN COUNTER
D0 D1 D2 D3 D4 D5 D6 D7 D8 D9 D10 D11 D12 D13 D14 D15
OUTPUT STATE CONTROL LOGIC
Q
Q/2
M0
M1
M2
PLA

DC Characteristics over Operating Temperature Range (unless otherwise specified)

Symbol	Parameter	54F/74F			Units	Conditions
		Min	Typ	Max		
I_{CC}	Power Supply Current		106	160	mA	V_{CC} = Max

AC Characteristics

Symbol	Parameter	54F/74F			54F		74F		Units
		$T_A = +25°C$ $V_{CC} = +5.0$ V $C_L = 50$ pF			T_A, V_{CC} = Mil $C_L = 50$ pF		T_A, V_{CC} = Com $C_L = 50$ pF		
		Min	Typ	Max	Min	Max	Min	Max	
f_{max}	Maximum Clock Frequency	50	60				85		MHz
t_{PLH} t_{PHL}	Propagation Delay CP to Q	9.0 8.0	16.0 12.0	20.5 15.5			8.0 7.0	22.5 17.5	ns
t_{PLH} t_{PHL}	Propagation Delay CP to Q/2	9.0 10.0	15.5 15.5	20.0 20.0			8.0 9.0	22.0 22.0	ns
t_{PLH} t_{PHL}	Propagation Delay XTR to Q	8.5 6.0	12.0 10.5	15.5 13.5			7.5 5.0	17.5 15.0	ns
t_{PLH} t_{PHL}	Propagation Delay $\overline{MR}$ to Q	11.5 9.0	16.5 12.5	21.0 16.0			10.0 8.0	23.0 18.0	ns
t_{PLH} t_{PHL}	Propagation Delay $\overline{MR}$ to Q/2	8.0 7.0	14.0 10.5	17.5 13.5			7.0 6.0	19.5 15.0	ns
t_{PLH} t_{PHL}	Propagation Delay M_n to Q	10.0 10.5	15.0 17.0	19.0 21.5			9.0 9.0	21.0 23.5	ns

For information on waveforms, see Section 3 of the 1985 FAST Data Book.

AC Operating Requirements

Symbol	Parameter	54F/74F			54F		74F		Units
		$T_A = +25°C$ $V_{CC} = +5.0\ V$			T_A, V_{CC} = Mil		T_A, V_{CC} = Com		
		Min	Typ	Max	Min	Max	Min	Max	
$t_s(H)$ $t_s(L)$	Setup Time, HIGH or LOW D_n to $\overline{WE}$	2.0 4.0					2.5 4.5		ns
$t_h(H)$ $t_h(L)$	Hold Time, HIGH or LOW D_n to $\overline{WE}$	0 2.0					0 2.5		ns
$t_s(H)$ $t_s(L)$	Setup Time, HIGH or LOW D_n to CP	9.0 10.5					10.0 12.0		ns
$t_h(H)$ $t_h(L)$	Hold Time, HIGH or LOW D_n to CP	0 0					0 0		ns
$t_s(H)$ $t_s(L)$	Setup Time, HIGH or LOW XTR to CP	7.0 8.0					8.0 9.0		ns
$t_h(H)$	Hold Time, HIGH, XTR to CP	0					0		ns
$t_s(H)$ $t_s(L)$	Setup Time, HIGH or LOW Mode to CP	33.5 33.5					35.5 35.5		ns
$t_w(H)$	XTR Pulse Width, HIGH	11.5					13.0		ns
$t_w(L)$	MR Pulse Width, LOW	7.0					8.0		ns
$t_w(L)$	$\overline{WE}$ Pulse Width, LOW	4.5					5.0		ns
$t_w(H)$ $t_w(L)$	CP Pulse Width HIGH or LOW	3.5 9.5					4.0 10.5		ns
t_{rec}	Recovery Time $\overline{MR}$ to CP	5.0					6.0		ns
t_{rec}	Recovery Time Mode to CP	30.0					32.0		ns

For information on waveforms, see Section 3 of the 1985 FAST Data Book.

FAIRCHILD
A Schlumberger Company

FAST® DC Characteristics and Ordering Information

54F/74F DC Family Characteristics[1]

Symbol	Parameter		Limits[2]			Units	V_{CC}[4]	Conditions[2]	
			Min	Typ[3]	Max				
V_{IH}	Input HIGH Voltage		2.0			V		Recognized as a HIGH Signal over Recommended V_{CC} and T_A Range	
V_{IL}	Input LOW Voltage				0.8	V		Recognized as a LOW Signal over Recommended V_{CC} and T_A Range	
V_{CD}	Input Clamp Diode Voltage				-1.2	V	Min	$I_{IN} = -18$ mA	
V_{OH}	Output HIGH Voltage Std/3-State[6]	Mil	2.5	3.4		V	Min	$I_{OH} = -1$ mA	
		Com[7]	2.7	3.4					
	Output HIGH Voltage 3-State/Line Driver[6]	Mil	2.4	3.3		V	Min	$I_{OH} = -3$ mA	
		Com[7]	2.7	3.3					
	Output HIGH Voltage Line Driver[6]	Mil	2.0	3.2		V	Min	$I_{OH} = -12$ mA	
		Com[7]	2.0	3.1				$I_{OH} = -15$ mA	
V_{OL}	Output LOW Voltage Standard[6]	Mil		0.30	0.5	V	Min	$I_{OL} = 20$ mA	
		Com		0.30	0.5				
	Output LOW Voltage 3-State[6]	Mil		0.30	0.5	V	Min	$I_{OL} = 20$ mA	
		Com		0.35	0.5			$I_{OL} = 24$ mA	
	Output LOW Voltage Line Driver[6]	Mil		0.38	0.55	V	Min	$I_{OL} = 48$ mA	
		Com		0.42	0.55			$I_{OL} = 64$ mA	
I_{IH}	Input HIGH Current	0.5 U.L.			20	μA	Max	$V_{IN} = 2.7$ V	$I_{IH} = 40\ \mu$A Multiplied by Input HIGH U.L. Shown on Data Sheet
		n U.L.			n(40)				
	Input HIGH Current Breakdown Test, Std Inputs				100	μA	Max	$V_{IN} = 7.0$ V	
	Input HIGH Current Breakdown Test, Transceivers				1.0	mA	Max	$V_{IN} = 5.5$ V	
I_{IL}	Input LOW Current	0.375 U.L.			-0.6	mA	Max	$I_{IL} = -1.6$ mA Multiplied by Input LOW U.L. Shown on Data Sheet, $V_{IN} = 0.5$ V	
		n U.L.			n(-1.6)				
I_{OZH}	3-State Output OFF Current HIGH				50	μA	Max	$V_{OUT} = 2.7$ V	
I_{OZL}	3-State Output OFF Current LOW				-50	μA	Max	$V_{OUT} = 0.5$ V	

54F/74F Family DC Characteristics (cont'd)

Symbol	Parameter		Limits[2] Min	Limits[2] Typ[3]	Limits[2] Max	Units	V_{CC}[4]	Conditions[2]
I_{OH}	Open Collector Output Leakage Current				100	µA	Min	$V_{IN} = V_{IH}/V_{IL}$ $V_{OUT} = V_{CC}$
I_{OS}[5]	Output Short-Circuit Current	Std/3-State[6]	-60		-150	mA	Max	$V_{OUT} = 0$ V
		Line Driver[6]	-100		-225			

1. Unless otherwise noted, conditions and limits apply throughout the temperature range for which the particular device type is rated. The ground pin is the reference level for all applied and resultant voltages.
2. Unless otherwise stated on individual data sheets.
3. Typical characteristics refer to $T_A = +25°C$ and $V_{CC} = +5.0$ V.
4. Min and Max refer to the values listed in the table of recommended operating conditions.
5. For I_{OS}, the use of high-speed test apparatus and/or sample-and-hold techniques are preferable in order to minimize internal chip heating and more accurately reflect operational values. Otherwise, prolonged shorting of a HIGH output may raise the chip temperature well above normal and thereby cause invalid readings in other parameter tests. In any sequence of parameter tests, I_{OS} tests should be performed last.
6. Refers to the type of output pull-up/pulldown circuitry used for the particular device. Standard outputs may be identified by an Output HIGH/LOW fan-out of 25/12.5 U.L.; 3-State outputs may be identified by an Output HIGH/LOW fan-out of 75/15 (12.5) U.L.; Line Driver outputs may be identified by an Output HIGH/LOW fan-out of 75/40 (30) U.L.
7. Refers to ±5% V_{CC} specifications. ±10% V_{CC} Commercial limits are the same as the Military limits.

Ordering Information

The Selection Guide lists only the basic device numbers. This basic number is used to form part of a simplified purchasing code where the package type and temperature range are defined as follows:

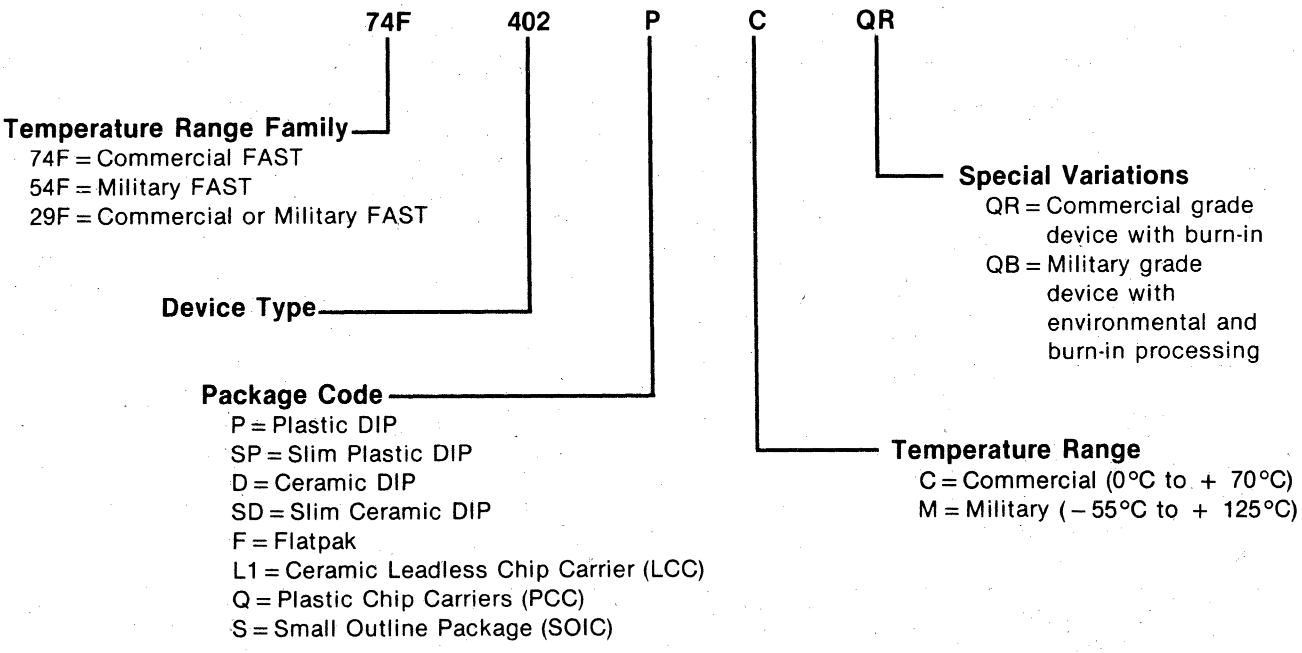

Temperature Range Family
74F = Commercial FAST
54F = Military FAST
29F = Commercial or Military FAST

Device Type

Package Code
P = Plastic DIP
SP = Slim Plastic DIP
D = Ceramic DIP
SD = Slim Ceramic DIP
F = Flatpak
L1 = Ceramic Leadless Chip Carrier (LCC)
Q = Plastic Chip Carriers (PCC)
S = Small Outline Package (SOIC)

Special Variations
QR = Commercial grade device with burn-in
QB = Military grade device with environmental and burn-in processing

Temperature Range
C = Commercial (0°C to + 70°C)
M = Military (−55°C to + 125°C)

FAIRCHILD
A Schlumberger Company

Digital Process Flow Option

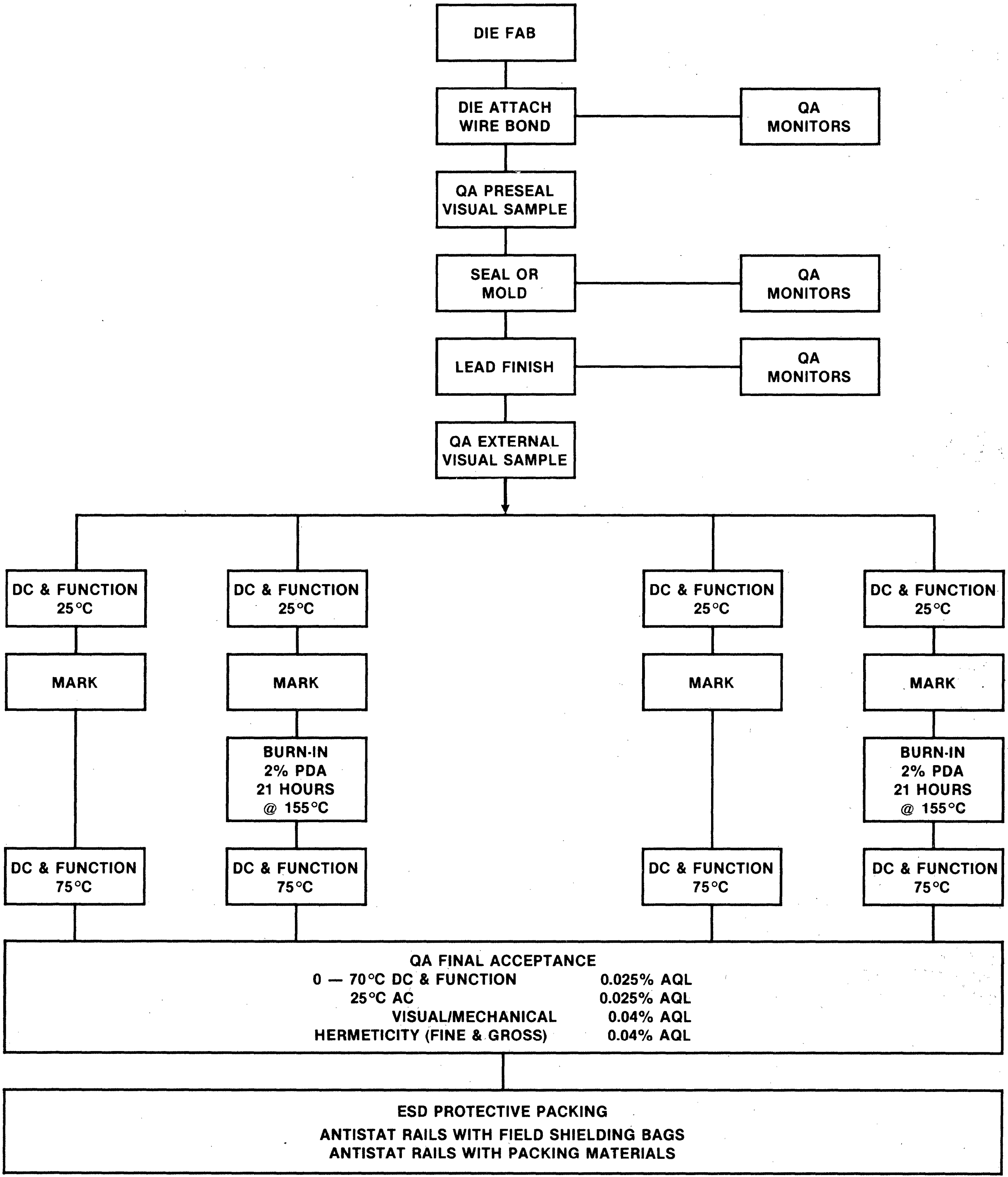
DIE FAB
DIE ATTACH WIRE BOND
QA MONITORS
QA PRESEAL VISUAL SAMPLE
SEAL OR MOLD
QA MONITORS
LEAD FINISH
QA MONITORS
QA EXTERNAL VISUAL SAMPLE
DC & FUNCTION 25°C
DC & FUNCTION 25°C
DC & FUNCTION 25°C
DC & FUNCTION 25°C
MARK
MARK
MARK
MARK
BURN-IN 2% PDA 21 HOURS @ 155°C
BURN-IN 2% PDA 21 HOURS @ 155°C
DC & FUNCTION 75°C
DC & FUNCTION 75°C
DC & FUNCTION 75°C
DC & FUNCTION 75°C
QA FINAL ACCEPTANCE
0 — 70°C DC & FUNCTION 0.025% AQL
25°C AC 0.025% AQL
VISUAL/MECHANICAL 0.04% AQL
HERMETICITY (FINE & GROSS) 0.04% AQL
ESD PROTECTIVE PACKING
ANTISTAT RAILS WITH FIELD SHIELDING BAGS
ANTISTAT RAILS WITH PACKING MATERIALS

FAIRCHILD
A Schlumberger Company

F100K Logic Selection Guide

Gates and Buffers

Device	Description	# Inputs/Gate	Prop Delays*
F100101	Triple OR/NOR	5	0.95ns
F100102	Quint OR/NOR	2	0.95ns
F100104	Quint AND/NAND	2	1.40ns
F100107	Quint Exclusive OR/NOR	2	1.40ns
F100117	Triple 2-wide OR-NOR/AND/NAND	5	2.30ns
F100118	5-wide 5,4,4,4,2 OA/OAI	19	3.00ns
F100121	9-bit Inverter	1	1.25ns
F100122	9-bit Buffer	1	1.25ns
F100126	9-bit Backplane Driver	1	2.55ns

*Maximum Prop Delay at 25°C in Flatpak

Flip-Flops/Latches

Device	Description	Toggle Freq/Prop Delay*
F100130	Triple D Latch	1.50ns
F100131	Triple D Flip-Flop	350MHZ
F100150	Hex D Latch	1.20ns
F100151	Hex D Flip-Flop	375MHZ

* Minimum Fmax for Flip-Flops/Max Prop Delay for latches

Multiplexers/Demultiplexers

Device	Description	Prop Delay*
F100155	Quad Multiplexer/Latch	1.65ns
F100163	Dual 8-Input Mux	1.50ns
F100164	Single 16-Input Mux	2.15ns
F100170	Dual 1 of 4 or Single 1 of 8 Demux/Decoder	2.50ns
F100171	Triple 4-Input Mux	1.40ns

* Maximum Prop Delay at 25°C in Flatpak

Translators

Device	Description	Prop Delay*
F100124	Hex TTL-to-ECL Translator	2.70ns
F100125	Hex ECL-to-TTL Translator	3.50ns

* Maximum Prop Delay at 25°C in Flatpak

Line-Bus Drivers / Transceivers / Receivers

Device	Description	Prop Delay*
F100112	Quad Driver	1.20ns
F100113	Quad Driver	1.15ns
F100114	Quint Differential Line Receiver	1.80ns
F100123	Hex Bus Driver	2.20/4.10ns
F100194	Quint Duplex Bus Driver (Transceiver)	1.20ns

* Maximum Prop Delay at 25°C in Flatpak

Shift Registers/Counters

Device	Description	Shift Frequency
F100136	4-bit Bidirectional Shift Register or Modulo 16 up/down counter	250MHZ
F100141	8-bit Bidirectional Shift Register	300MHZ

* Minimum Fshift at 25°C in Flatpak

Arithmetic Operators

Device	Description	Prop Delay*
F100156	Mask-Merge Latch	1.60ns
F100158	8-bit Shift Matrix	2.50ns
F100160	Dual Parity Checker/Generator	3.90ns
F100165	Universal Priority Encoder	3.90ns
F100166	9-bit Comparator	3.30ns
F100179	Carry Lookahead Generator	2.70ns
F100180	High-Speed 6-bit Adder	4.40ns
F100181	4-bit Binary/BCD Arithmetic Logic Unit	6.60ns
F100182	9-bit Wallace Tree Adder	7.00ns
F100183	2 × 8-bit Recode Multiplier	3.60ns

*Maximum Prop Delay at 25°C in Flatpak

Special Functions

Device	Description
F100142	4 × 4 Content Addressable Memory

© 1985 Fairchild Printed in U.S.A. 40M 702537
August, 1985 Fairchild reserves the right to make changes in its products without notice in order to improve design or performance characteristics.

Fairchild Semiconductor Corporation, Memory & High Speed Logic
P.O. Box 5000, M/S 7517, Puyallup, Washington 98373
TWX 310 499 4425

FAIRCHILD
A Schlumberger Company

F100K Logic

Selection Guide

Cross Reference Guide

FUNCTION (FP)	HITACHI	SIGNETICS
100101 TRI 5-IN OR/NOR	100101	100101
100102 QNT 2-IN OR/NOR	100102	100102
100104 QNT 2-IN AND/NAND	-----	-----
100107 QNT EX OR/NOR	100107	100107
100112 QUAD DRIVER	100112	100112
100113 QUAD LINE DRIVER	-----	-----
100114 QNT LINE RCVER	100114	100114
100117 TRI OA-OAI	100117	100117
100118 5 WIDE OA-OAI	100118	100118
100121 9-BIT INVERTING BUFFER	-----	-----
100122 9-BIT BUFFER	100122	100122
100123 HEX BUS DRIVER	100123	100123
100124 TTL-100K	-----	-----
100125 100K-TTL	100125	-----
100126 BACKPLANE DRIVER	100126	100126
100130 TRI D LATCH	100130	-----
100131 TRI D FF	100131	100131
100136 COUNTER	100136	-----
100141 8-BIT SHIFT REG	100141	100141
100142 4 × 4 CONTENT ADD MEM	100142	100142
100150 HEX D LATCH	100150	100150

FUNCTION (FP)	HITACHI	SIGNETICS
100151 HEX D FF	100151	100151
100155 QD 2-WAY MUX/LATCH	100155	100155
100156 MASK-MERGE	100156	100156
100158 8-BIT SHIFT MATRIX	100158	100158
100160 DUAL PARITY GEN/CHK	100160	100160
100163 DUAL 8-BIT MUX	100163	100163
100164 16-IN MUX	100164	100164
100165 PRIORITY ENCODER	100165	100165
100166 9-BIT COMPARE	100166	100166
100170 UNIVERSAL DECODER	100170	100170
100171 TRI 4-IN MUX	100171	100171
100175 QNT LATCH 100K IN/10K OUT	-----	100175
100179 CARRY LOOKAHEAD	100179	-----
100180 FAST 6-BID ADDER	100180	100180
100181 4-BIT ALU	100181	100181
100182 9-BIT WALLACE ADDER	100182	-----
100183 2 × 8-BIT MULTIPLIER	100183	-----
100194 QNT TRANSCEIVER	-----	-----
100255 QNT BI DIRECTIONAL ECL/TTL TRANSLATOR	-----	100255

© 1985 Fairchild Printed in U.S.A. 40M 702537
August, 1985 Fairchild reserves the right to make changes in its products without notice in order to improve design or performance characteristics.

Fairchild Semiconductor Corporation, Memory & High Speed Logic
P.O. Box 5000, M/S 7517, Puyallup, Washington 98373
TWX 310 499 4425

F100104 QUINT AND/NAND GATE
Preliminary Information

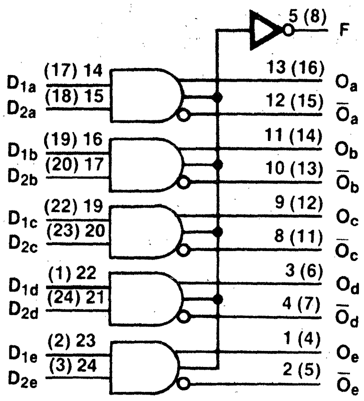
5 (8)
F
D_{1a}
(17) 14
(18) 15
D_{2a}
13 (16)
O_a
12 (15)
$\overline{O}_a$
D_{1b}
(19) 16
(20) 17
D_{2b}
11 (14)
O_b
10 (13)
$\overline{O}_b$
D_{1c}
(22) 19
(23) 20
D_{2c}
9 (12)
O_c
8 (11)
$\overline{O}_c$
D_{1d}
(1) 22
(24) 21
D_{2d}
3 (6)
O_d
4 (7)
$\overline{O}_d$
D_{1e}
(2) 23
(3) 24
D_{2e}
1 (4)
O_e
2 (5)
$\overline{O}_e$

The F100104 is a monolithic quint AND/NAND gate. The Function output is the wire-NOR of all five AND gate outputs.

$F = \overline{(D_{1a} \bullet D_{2a}) + (D_{1b} \bullet D_{2b}) + (D_{1c} \bullet D_{2c}) + (D_{1d} \bullet D_{2d}) + (D_{1e} \bullet D_{2e})}$. All inputs have 50KΩ pull-down resistors.

- **Available in Ceramic DIP or Flatpak**
- **Data Input to Output Propagation Delay 1.9 ns Max**
- **Outputs Specified to Drive a 50 ΩLoad**
- **Moderate Edge Rates Minimize Ringing and Reflections on Interconnecting Wiring**

F100121 9-BIT INVERTER
Preliminary Information

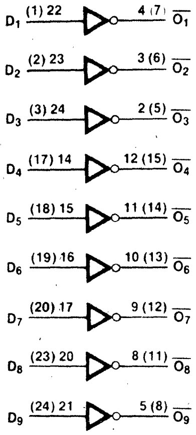
D_1
(1) 22
4 (7)
$\overline{O_1}$
D_2
(2) 23
3 (6)
$\overline{O_2}$
D_3
(3) 24
2 (5)
$\overline{O_3}$
D_4
(17) 14
12 (15)
$\overline{O_4}$
D_5
(18) 15
11 (14)
$\overline{O_5}$
D_6
(19) 16
10 (13)
$\overline{O_6}$
D_7
(20) 17
9 (12)
$\overline{O_7}$
D_8
(23) 20
8 (11)
$\overline{O_8}$
D_9
(24) 21
5 (8)
$\overline{O_9}$

The F100121 is a monolithic 9-bit inverter. The device contains nine inverting buffer gates with single input and output. All inputs have 50KΩ pull-down resistors.

- **Available in Ceramic DIP or Flatpak**
- **Data to Output Delays of 1.6 ns Max**
- **Outputs Specified to Drive a 50 ΩLoad**
- **Moderate Edge Rates Minimize Ringing and Reflections on Interconnecting Wiring**

F100135 TRIPLE J-K FLIP-FLOP
Preliminary Information

The F100135 contains three J-K type, edge-triggered master-slave flip-flops with true and complement outputs. All have individual Clock (CP_n), Clear (C_n), and Set (S_n) inputs. Clocking occurs on the rising edge of CP_n.

- **Available in Ceramic Dip or Flatpak**
- **Propagation Delay 2.2 ns Max**
- **Toggle Frequency 350 MHz**
- **Outputs Specified to Drive a 50 ΩLoad**
- **Moderate Edge Rates Minimize Ringing and Reflections on Interconnecting Wiring**

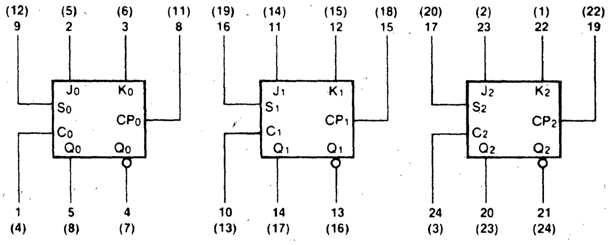
(12) 9
(5) 2
(6) 3
(11) 8
(19) 16
(14) 11
(15) 12
(18) 15
(20) 17
(2) 23
(1) 22
(22) 19
J_0
K_0
S_0
CP_0
C_0
Q_0
$\overline{Q}_0$
J_1
K_1
S_1
CP_1
C_1
Q_1
$\overline{Q}_1$
J_2
K_2
S_2
CP_2
C_2
Q_2
$\overline{Q}_2$
1 (4)
5 (8)
4 (7)
10 (13)
14 (17)
13 (16)
24 (3)
20 (23)
21 (24)

F100139 4-BIT SYNCHRONOUS COUNTER
Preliminary Information

The F100139 is a 4-bit synchronous binary up counter. Three terminal count outputs are provided: $\overline{TC}_{15}$ goes LOW when the count reaches fifteen, TC_{14} goes HIGH when the count reaches fourteen, and $\overline{TC}_{14}$ goes LOW when the count reaches fourteen allowing connection to the active-LOW Parallel Enable inputs, $\overline{PE}_1$ or $\overline{PE}_2$, for preset operations. Active-LOW Count Enable Parallel ($\overline{CEP}$) and Count Enable Trickle ($\overline{CET}$) permit easy connection in multi-stage counting when used with $\overline{TC}_{15}$. The active-HIGH asynchronous Master Reset causes the outputs, Q_0-Q_3, to be set to the count of zero. All inputs are provided with 50KΩ pull-down resistors.

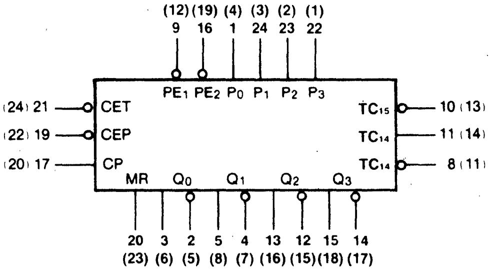
(12) (19) (4) (3) (2) (1)
9 16 1 24 23 22
PE1 PE2 P0 P1 P2 P3
(24) 21
CET
(22) 19
CEP
(20) 17
CP
TC15
10 (13)
TC14
11 (14)
TC14
8 (11)
MR Q0 Q1 Q2 Q3
20 3 2 5 4 13 12 15 14
(23) (6) (5) (8) (7) (16) (15) (18) (17)

- **High Speed Count – 500 MHz Typical Toggle Frequency**
- **Two Count Enables for Cascading**
- **Complementary Q_n Outputs**
- **Asynchronous Master Reset**

F100140 4-BIT DECADE COUNTER
Preliminary Information

The F100140 is a 4-bit synchronous decade down-counter. Three terminal count outputs are provided: $\overline{TC}_0$ goes LOW when the count reaches zero, TC_1 goes HIGH when the count reaches one, and $\overline{TC}_1$ goes LOW when the count reaches one allowing connection to the active-LOW Parallel Enable inputs, $\overline{PE}_1$ or $\overline{PE}_2$, for preset operations. Active-LOW Count Enable Parallel ($\overline{CEP}$) and Count Enable Trickle ($\overline{CET}$) permit easy connection in multi-stage counting when used with $\overline{TC}_0$. The active-HIGH asynchronous Master Reset causes the outputs, Q_0-Q_3, to be set to the count of nine. All inputs are provided with 50KΩ pull-down resistors.

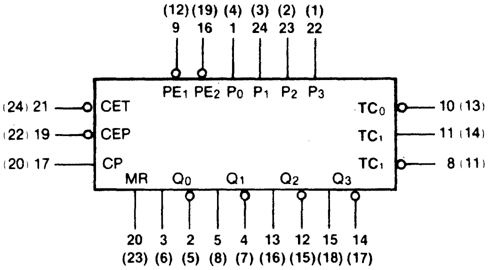
(12) (19) (4) (3) (2) (1)
9 16 1 24 23 22
PE1 PE2 P0 P1 P2 P3
(24) 21
CET
(22) 19
CEP
(20) 17
CP
TC0
10 (13)
TC1
11 (14)
TC1
8 (11)
MR Q0 Q1 Q2 Q3
20 3 2 5 4 13 12 15 14
(23) (6) (5) (8) (7) (16) (15) (18) (17)

- **High Speed Count – 500 MHz Typical Toggle Frequency**
- **Two Count Enables for Cascading**
- **Complementary Q_n Outputs**
- **Asynchronous Master Reset**

F100250 QUINT LINE TRANSCEIVER
Preliminary Information

The F100250 is a quint line transceiver capable of simultaneously transmitting and receiving differential mode signals on twisted pair line. Each transceiver has a signal input S_{IN}, a signal output SOUT and two differential line inputs/outputs L and $\overline{L}$. Signals received from the lines L and $\overline{L}$ can be stored in an internal latch. The line outputs are designed to drive 155Ω twisted lines. The $\overline{CLOCK}$ input is common to all five transceivers.

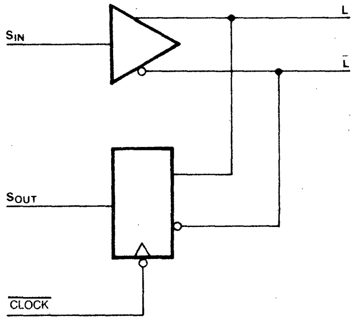
SIN
L
L̄
SOUT
CLOCK

- **Full Duplex Operation**
- **Common Mode Noise Immunity of ±1V**
- **Maximum Line Length of 15M (with 30 AWG Wire)**
- **Available in Ceramic DIP or Flatpak**

WHAT'S NEW IN IC MASTER

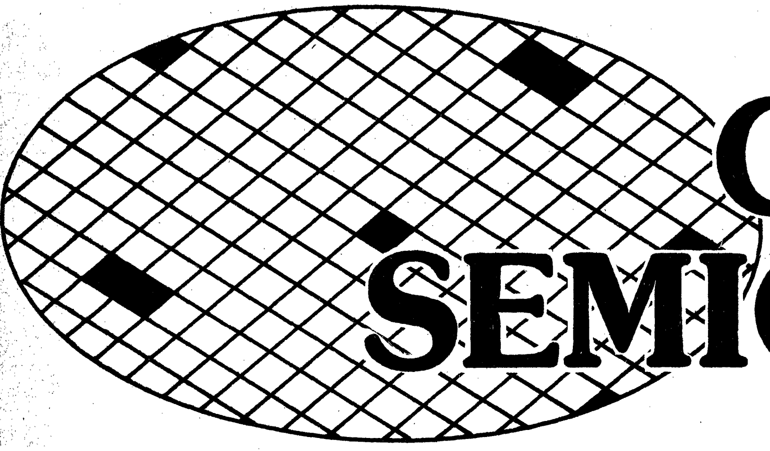

DON'T MISS THE EXPANDED CUSTOM/ SEMICUSTOM IC SECTION

Lists software design tools available for Programmable Logic Devices, Gate Arrays, Standard Cells, and Linear and Linear/ Digital Arrays. Major macros in VLSI/LSI Macrocell Libraries are listed by source.

Volume II, page 4401

GBL GigaBit Logic

10G PicoLogic™ Family

10G000A

Quad 3 Input NOR Gate
290 ps Gate Delay

- 290 ps propagation delay
- 10G PicoLogic Family and ECL compatible inputs and outputs
- Wire-OR capability
- Supports wide range of load resistor and termination voltage combinations

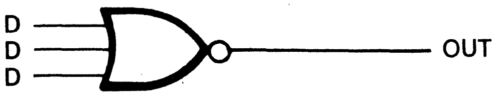

¼ 10G000A

10G011A

Dual 1 to 4 Fanout Buffer
1.5 GHz Clock Rate

- 1.5 GHz clock distribution/data buffering
- 30 ps typical skew between outputs
- 10G PicoLogic and ECL-compatible inputs and outputs

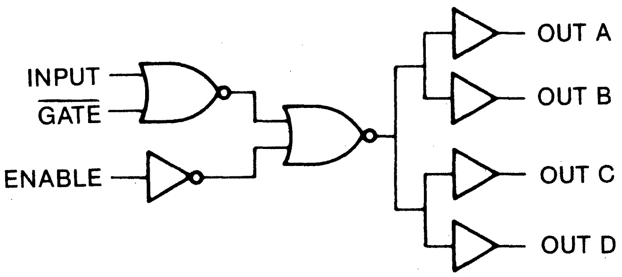
INPUT
$\overline{\text{GATE}}$
ENABLE
OUT A
OUT B
OUT C
OUT D

½ 10G011A

10G012A

Dual Driver/Comparator
2 GHz Data Rate

- DC to 2 GHz operation
- Adjustable input threshold or use ECL-compatible mode
- 30 psec typical skew between complementary outputs
- Applications incude:
  - High speed comparator
  - Line Driver
  - Line Receiver
  - 2-phase clock generator

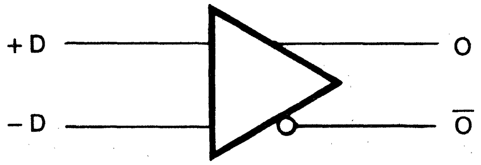
+D
−D
O
$\overline{\text{O}}$

½ 10G012A

10G021A

Dual Precision D Flip Flop
2 GHz Clock Rate

- DC to 2 GHz operation
- Ultra low input sampling jitter
- High gain differential input
- Adjustable input threshold with ECL-compatible mode
- Individual clock, preset and clear inputs on each flip flop
- Edge-triggered flip-flop design clocks on falling clock edge
- Complementary, ECL and PicoLogic compatible outputs

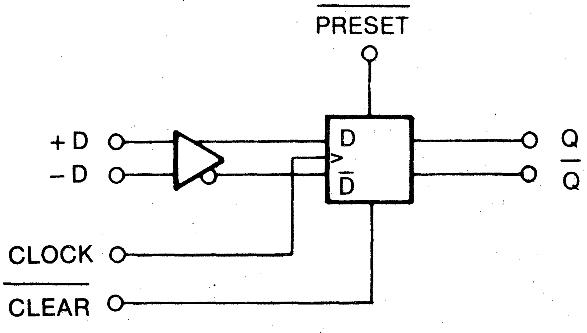
$\overline{\text{PRESET}}$
+D
−D
D
>
$\overline{\text{D}}$
Q
$\overline{\text{Q}}$
CLOCK
$\overline{\text{CLEAR}}$

½ 10G021A

1908 Oak Terrace Lane, Newbury Park, CA 91320 (805) 499-0610 • Telex 6711358 GIGAB

GBL GigaBit Logic

10G065

7 Stage Ripple Counter 2.5 GHz Clock Rate

- 2.5 GHz operation
- 10G PicoLogic and ECL-compatible inputs and outputs
- Asynchronous clear capability on last 6 stages
- On-chip clock gating

10G060

2 Stage Ripple Counter 2.5 GHz Clock Rate

- 2.5 GHz operation
- 10G PicoLogic and ECL-compatible inputs and outputs
- Divide-by-2 and divide-by-4 outputs

10G070

Variable Modulus Divider 1.75 GHz Clock Rate

- 1.75 GHz operation
- Divide by 5 and 6, 10 and 11, 20 and 21, or 40 and 41
- 10G PicoLogic and ECL-compatible inputs and outputs
- Divide by N or N + 1 mode control timing allows use of TTL, CMOS or ECL control logic
- Wire-OR output capability

10G040/10G041

Multiplexer Demultiplexer 1.5 GHz Data Rate

- 1.50 GHz operation
- Complete multiplexer (10G040) or demultiplexer (10G041) single-chip system including sequence counter and control logic
- Cascadable for 16, 32 or 64 channel operation
- Parallel or ripple data modes
- Demux has frame sync support logic
- ECL compatible inputs and outputs
- Applications:
    - Fiber optic systems
    - Microwave datacom systems
    - Hi resolution graphic displays

16G010
16G011

15 mA/100 mA Schottky Diode Arrays

- 14 Schottky barrier diodes plus full wave rectifier on each chip
- 15 mA (16G010) and 100 mA (16G011) versions
- Exceedingly low junction capacitance
- Low series resistance
- 600 GHz typical RC cutoff frequency
- Excellent thermal and electrical matching
- Available in leadless chip carrier (LCC), flatpack or dice form

16G020
16G021

Single/Dual Gate D-MESFET Arrays

- 11 single gate (16G020) or 8 dual gate (16G021) depletion MESFETS on each chip
- 15 GHz frequency response
- −1.0V pinchoff voltage
- 24 mA I_{DSS} (typ)
- Excellent thermal and electrical matching
- Available in leadless chip carrier (LCC), flatpack or dice form

1908 Oak Terrace Lane, Newbury Park, CA 91320 (805) 499-0610 • Telex 6711358 GIGAB

12G014

256x4 Bit Pipelined Static RAM

- Nanosecond access and cycle times
- Fully pipelined architecture with latched inputs and outputs provide maximum usable speed
- Write cycle same speed as read cycle
- Internally generated write pulse eliminates need for narrow write pulse
- Register mode output for fast access with minimum cycle
- Latch mode output for fast access with extended cycle
- Single-ended or differential clock input
- ECL and 10G PicoLogic™ Family compatible
- Temperature and voltage compensation capability
- Source follower outputs permit full wire-OR capability
- Member of GigaBit Logic's 12G Gallium Arsenide NanoRam™ Family

Gallium Arsenide Foundry Program

Move Your Custom Product Designs Into The GHz Realm of Digital GaAs IC's.

- One Micron Gate Length
- Dual Layer Metal
- 4 Micron Metal Pitch
- Planarized Dielectric
- High Yield DSW Lithography
- Fully Implanted Active Layers
- 3 Inch LEC Starting Material
- Sputtered/Plasma Thin Films
- All "Dry" Processing
- High Volume Production Capability
- Digital Logic to 4 GHz
- Analog/RF Functions to 5 GHz
- Static RAM to 1 NS Access
- Supports CDFL, SDFL, BFL, SCFL
- 200 uW to 3 mW/Gate Design Range
- ECL Compatible I/O Available
- Sub 100 PSEC Gate Delays
- Compatibility with E-MESFET

Evaluation Products

10GEVAL Evaluation Board

- Accelerates evaluation of GigaBit's 10G PicoLogic™ Gallium Arsenide IC's
- Provides a state-of-the-art educational training tool on digital GaAs ICs
- Contains five PicoLogic™ GaAs ICs:
  - One 10G065-3, 7 Stage Ripple Counter
  - Four 10G011-4 dual 1-to-4 Fanout Buffers
- Complete with two on-board oscillators:
  - 1.5 to 2.1 GHz sinewave VCO
  - Up to 500 MHz square wave ring oscillator
- 24 SMA connectors and cables allow flexible test equipment interface
- Comprehensive 135 page User's Manual documents tests and experiments and contains valuable background material on GaAs logic
- Simple external power supply requirements: +10V and −5V
- Housed in a rugged metal carrying case
- Fully assembled and tested

10GPDK Prototype Development Kit

- Complete kit for prototyping and testing GigaBit's PicoLogic™ and NanoRam™ Gallium Arsenide ICs
- Contains an 8-site logic PCB with all necessary SMAs, terminating resistors, decoupling capacitors and mini-coax for interconnect wiring, plus a mating power supply board
- Kit components available separately for expanded applications
- Low cost, quick turnaround solution to initial device performance testing and evaluation needs
- 90G100 8-site logic card mates with the power supply board in GigaBit's 10GEVAL Evaluation Board, extending 10GEVAL capabilities
- Compatible with either GigaBit' standard 36 I/O flatpack or leadless chip carrier packages
- Power supply card (10GBPS) is fully assembled and tested
- 90G100 accepts up to 34 SMA I/O connectors
- Supports signals with 100ps rise and fall times and up to 3 GHz clock rates

DIGITAL

GigaBit Logic

LOW POWER SCHOTTKY/SCHOTTKY TTL GD74LS/S

■ Low Power Schottky

Device	Function	Suffix
GD74LS00	Quad 2-Input NAND Gate	B, J
GD74LS02	Quad 2-Input NOR Gate	B, J
GD74LS03	Quad 2-Input NAND Gate, OC	B, J
GD74LS04	Hex Inverter	B, J
GD74LS05	Hex Inverter, OC	B, J
GD74LS06	Hex Inverter Buffer/Driver, OC (30V)	B, J
GD74LS07	Hex Buffer/Driver, OC (30V)	B, J
GD74LS08	Quad 2-Input AND Gate	B, J
GD74LS09	Quad 2-Input AND Gate, OC	B, J
GD74LS10	Triple 3-Input NAND Gate	B, J
GD74LS11	Triple 3-Input AND Gate	B, J
GD74LS14	Hex Schmitt Trigger Inverter	B, J
GD74LS16	Hex Inverter Buffer/Driver, OC (15V)	B, J
GD74LS17	Hex Buffer/Driver, OC (15V)	B, J
GD74LS20	Dual 4-Input NAND Gate	B, J
GD74LS21	Dual 4-Input AND Gate	B, J
GD74LS27	Triple 3-Input NOR Gate	B, J
GD74LS30	8-Input NAND Gate	B, J
GD74LS32	Quad 2-Input OR Gate	B, J
GD74LS38	Quad 2-Input NAND Buffer, OC	B, J
GD74LS42	BCD-to-Decimal Decoder	B, J
GD74LS51	Dual 2-Wide 2-Input AND-OR-Invert Gate	B, J
GD74LS73	Dual J-K Master-Slave Flip-Flop	B, J
GD74LS74A	Dual D-Type Positive Edge-Triggered Flip-Flop	B, J
GD74LS75	Quad Bistable Latch	B, J
GD74LS85	4-Bit Magnitude Comparator	B, J
GD74LS86	Quad 2-Input Exclusive-OR Gate	B, J
GD74LS90	Decade Counter	B, J
GD74LS92	Divide-by-12 Counter	B, J
GD74LS93	4-Bit Binary Counter	B, J
GD74LS95	4-Bit Shift Register (PIPO)	B, J
GD74LS107	Dual J-K Master-Slave Flip-Flop	B, J
GD74LS109	Dual J-K Positive Edge-Triggered Flip-Flop	B, J
GD74LS112	Dual J-K Negative Edge-Triggered Flip-Flop	B, J
GD74LS122	Retriggerable Monostable Multivibrator	B, J
GD74LS123	Dual monostable multivibrator with clear	B, J
GD74LS125A	Quad 3-State Buffer	B, J
GD74LS126	Quad 3-State Buffer	B, J
GD74LS132	Quad 2-Input schmitt NAND	B, J
GD74LS136	Quad Exclusive-OR, OC	B, J
GD74LS138	3-to-8 Decoder/Demultiplexer	B, J
GD74LS139	Dual 2-to-4 Decoder/Demultiplexer	B, J
GD74LS145	BCD-to-Decimal Decoder/Driver, OC (15V)	B, J
GD74LS151	8-to-1 Multiplexer	B, J
GD74LS153	Dual 4-to-1 Multiplexer	B, J
GD74LS154	4-to-16 Decoder/Demultiplexer	B, J
GD74LS155	Dual 2-to-4 Decoder/Demultiplexer	B, J
GD74LS156	Dual 2-to-4 Decoder/Demultiplexer, OC	B, J
GD74LS157	Quad 2-to-1 Multiplexer	B, J
GD74LS158	Quad 2-to-1 Multiplexer (Inverting)	B, J
GD74LS161A	Synchronous 4-Bit Binary Counter	B, J
GD74LS163A	Synchronous 4-Bit Binary Counter	B, J
GD74LS164	8-Bit SIPO Shift Register	B, J
GD74LS165	8-Bit PISO Shift Register	B, J
GD74LS166	8-Bit PIPO Shift Register	B, J
GD74LS174	Hex D-Type Flip-Flop with Clear	B, J
GD74LS175	Quad D-Type Flip-Flop with clear	B, J
GD74LS191	4-Bit Binary Up/Down Counter	B, J
GD74LS193	4-Bit Binary Up/Down Counter with clear	B, J
GD74LS194A	4-Bit Bidirectional Shift Register (PIPO)	B, J
GD74LS195	4-Bit Parallel-Access Shift Register	B, J
GD74LS221	Dual Monostable Multivibrator	B, J
GD74LS240	Octal 3-State Buffer (Inverting)	B, J
GD74LS241	Octal 3-State Buffer (Noninverting)	B, J
GD74LS243	Quad Bus Transceiver	B, J
GD74LS244	Octal 3-State Buffer	B, J
GD74LS245	Octal Bus Transceiver, 3 state	B, J
GD74LS251	8-to-1 Multiplexer, 3-State	B, J
GD74LS253	Dual 4-to-1 Multiplexer, 3-State	B, J
GD74LS257A	Quad 2-to-1 Multiplexer, 3-State	B, J
GD74LS258	Quad 2-to-1 Multiplexer, 3-State (Inverting)	B, J
GD74LS259	8-Bit Addressable Latch	B, J
GD74LS273	Octal D Flip-Flop	B, J
GD74LS280	9-Bit Odd/Even Parity Generator/Checker	B, J
GD74LS283	4-Bit Binary full adder	B, J
GD74LS299	8-Bit Shift/Storage Register, 3-State	B, J
GD74LS322	8-Bit Shift Register, with Sign Extend	B, J
GD74LS365A	Hex bus buffer, 3 state	B, J
GD74LS366	Hex bus buffer (Inverting)	B, J
GD74LS367A	Hex bus buffer 3-stete	B, J
GD74LS368	Hex Inverter bus Driver, 3-state	B, J
GD74LS373	Octal Latch, 3-State	B, J
GD74LS374	Octal D Flip-Flop, 3-State	B, J
GD74LS377	Octal D-Type Flip-Flop with Enable	B, J
GD74LS390	Dual Decade Counter	B, J
GD74LS393	Dual Binary Counter	B, J
GD74LS395A	4-Bit Cascadable Shift Register, 3-State	B, J
GD74LS541	Octal bus buffer 3-state	B, J
GD74LS573	Octal D-Type Transparent Latch, 3 State	B, J
GD74LS590	8 Bit Binary Counter with Output Register, 3 State	B, J
GD74LS612	Memory Mappers, 3-state Map Output	B, J
GD74LS640	Octal bus transceiver 3-state	B, J
GD74LS646	Octal bus transceiver/register 3-state	B, J
GD74LS670	4 word × 4 bit register file 3-state	B, J

■ Schottky TTL

Device	Function	Suffix
GD74S00	Quad 2-Input NAND Gate	B, J
GD74S04	Hex Inverter	B, J
GD74S08	Quad 2-Input AND Gate	B, J
GD74S10	Triple 3-Input NAND Gate	B, J
GD74S32	Quad 2-Input OR Gate	B, J
GD74S51	Dual 2-Wide 2-Input AND-OR-Invert Gate	B, J
GD74S74	Dual D-Type Positive Edge-Triggered Flip-Flop	B, J
GD74S85	4 Bit Magnitude Comparator	B, J
GD74S86	Quad 2-Input Exclusive-OR Gate	B, J
GD74S112	Dual J-K Negative Edge-Triggered Flip-Flop	B, J
GD74S138	3-to-8 Decoder/Demultiplexer	B, J
GD74S139	Dual 2-to-4 Decoder/Demultiplexer	B, J
GD74S157	Quad 2-to-1 Multiplexer	B, J
GD74S163	Synchronous 4-Bit Binary Counter	B, J
GD74S174	Hex D-Type Flip-Flop with Clear	B, J
GD74S189	64-Bit Random Access Memory 3-state	B, J
GD74S240	Octal 3-State Buffer (Inverting)	B, J
GD74S251	8-to-1 Multiplexer, 3-State	B, J
GD74S280	9-Bit Odd/Even parity Generator/Checker	B, J
GD74S299	8-Bit Shift/Storage Register, 3-State	B, J
GD74S374	Octal D Flip-Flop, 3-state	B, J

■ Interface

GD75188	Line Driver	B
GD75189A	Line Receiver	B

B (blank): Plastic DIP, J: Ceramic Dip

GSS

HEAD OFFICE
#60-1, CHOONGMU-RO, 3KA CHOONG-KU, SEOUL, KOREA
C.P.O. BOX 9495, SEOUL, KOREA
TEL: 273-4141-9, 4151-9 (EXT) 3071, 3112 (DIR) 274-3219
TLX: GOLDSEC 22767 FAX: 273-3062

SUNNYVALE OFFICE
#1130 EAST ARQUES AVENUE SUNNYVALE, CA94086
TEL: (408) 737-8575, TLX: 176835 LKYGS SUVL
FAX: (408) 737-0186

HIGH SPEED CMOS TTLs

74HCXX, 74HCTXX

Device	Function	PKG DIP	Suffix
GD74HC/HCT00	Quad 2-Input NAND Gates	14	B, J
GD74HC/HCT02	Quad 2-Input NOR Gates	14	B, J
GD74HC/HCT04	Hex Inverters	14	B, J
GD74HC/HCT05	Hex Inverter, OC	14	B, J
GD74HC/HCT07	Hex Buffer/Driver, OC (30V)	14	B, J
GD74HC/HCT08	Quad 2-Input AND Gates	14	B, J
GD74HC/HCT10	Triple 3-Input NAND Gates	14	B, J
GD74HC/HCT11	Triple 3-Input AND Gates	14	B, J
GD74HC/HCT14	Hex Inverting Schmitt Triggers	14	B, J
GD74HC/HCT20	Dual 4-Input NAND Gates	14	B, J
GD74HC/HCT21	Dual 4-Input AND Gates	14	B, J
GD74HC/HCT27	Triple 3-Input NOR Gates	14	B, J
GD74HC/HCT30	8-Input NAND Gates	14	B, J
GD74HC/HCT32	Quad 2-Input OR Gates	14	B, J
GD74HC/HCT42	BCD-to-Decimal Decoder	16	B, J
GD74HC/HCT51	Dual-AND-OR Invert Gates	14	B, J
GD74HC/HCT74	Dual D-Type Flip-Flops with Preset and Clear	14	B, J
GD74HC/HCT85	4 Bit Magnitude Comparator	16	B, J
GD74HC/HCT86	Quad 2-Input Exclusive-OR (XOR) Gates	14	B, J
GD74HC/HCT93	4 Bit Binary Counter	14	B, J
GD74HC/HCT112	Dual J-K Flip-Flops with Preset and clear	16	B, J
GD74HC/HCT123	Dual Retriggerable Monostable Multivibrators with clear	16	B, J
GD74HC/HCT125	Quad 3-State Buffer	14	B, J
GD74HC132	Quad Schmitt Trigger NAND	14	B, J
GD74HC138	3-to-8 Line Decoder/Demultiplexer	16	B, J
GD74HC139	Dual 2-to-4 Line Decoders/Demultiplexer	16	B, J
GD74HC145	BCD-to-Decimal Decoder/Driver, OC (15V)	16	B, J
GD74HC151	8 to 1 Multiplexer	16	B, J
GD74HC/HCT153	Dual 4-to-1 Multiplexer	16	B, J
GD74HC/HCT155	Dual 2-to-4 Decoder/Demultiplexer	16	B, J
GD74HC/HCT157	Quad 2-Input Multiplexers	16	B, J
GD74HC/HCT158	Quad 2-Input Multiplexers (Inverted Output)	16	B, J
GD74HC/HCT161A	Synchronous 4-Bit Counter, Direct clear	16	B, J
GD74HC/HCT163	Synchronous Binary Counter	16	B, J
GD74HC/HCT164	8-Bit SIPO Shift Register	14	B, J
GD74HC/HCT165	8-Bit PISO Shift Register	16	B, J
GD74HC/HCT173	Quad 3-State D Type Register	16	B, J
GD74HC/HCT174	Hex D Type Flip-Flop with clear	16	B, J
GD74HC/HCT175	Quad D Type Flip-Flop, Complementary output, Common Direct clear	16	B, J
GD74HC/HCT193	Synchronous Binary Up/Down Counter	16	B, J
GD74HC/HCT240	Octal 3-State Buffer, Inverted	20	B, J
GD74HC/HCT241	Octal 3-State Buffer, Noninverted	20	B, J
GD74HC/HCT244	Octal 3-State Buffer, Noninverted	20	B, J
GD74HC/HCT245	Octal Bus Transceiver, 3-State	20	B, J
GD74HC/HCT257	Quad 2-to-1 Multiplexer, 3-State	16	B, J
GD74HC/HCT259	8-Bit Addressable Latch	16	B, J
GD74HC/HCT273	Octal D Flip-Flop, Common Clock Single Rail Output	20	B, J
GD74HC/HCT283	4 Bit Binary Full Adder	16	B, J
GD74HC/HCT322	8 Bit Shift Register with Sign Extend	20	B, J
GD74HC/HCT365	Hex Bus Driver, 3 State	16	B, J
GD74HC/HCT367	Hex Bus Driver, 4-Line and 2 Line Enable Input	16	B, J
GD74HC/HCT373	Octal Latch, 3-State	20	B, J
GD74HC/HCT374	Octal D Flip/Flop, 3-State	20	B, J
GD74HC/HCT377	Octal D-Type Flip-Flop with Enable	20	B, J
GD74HC/HCT393	Dual Binary Counter	14	B, J
GD74HC/HCT670	4-Word 4-Bit Register File with 3-State Output	16	B, J

B (Blank): Plastic DIP, J: Ceramic DIP

HEAD OFFICE
#60-1, CHOONGMU-RO, 3KA CHOONG-KU, SEOUL, KOREA
C.P.O. BOX 9495, SEOUL, KOREA
TEL: 273-4141-9, 4151-9 (EXT) 3071, 3112 (DIR) 274-3219
TLX: GOLDSEC 22767 FAX: 273-3062

SUNNYVALE OFFICE
#1130 EAST ARQUES AVENUE SUNNYVALE, CA94086
TEL: (408) 737-8575, TLX: 176835 LKYGS SUVL
FAX: (408) 737-0186

GaAs Digital IC Products

HARRIS MICROWAVE SEMICONDUCTOR

NEW FOUR-BIT UNIVERSAL SHIFT REGISTER: HMD-12141-1

☐ 1.30 GHz Typical Clock Speed
☐ Propagation Delay of 700 ps Typical
☐ Shift Right, Shift Left, Parallel, or Hold
☐ Serial or Parallel Inputs and Outputs
☐ ECL Compatible & GaAs Compatible Inputs and Outputs
☐ 32-Pin Metal Flatpack Design

DIVIDE BY 2/4/8 BINARY COUNTER: HMD-11016-1

☐ 2.0 GHz Data Input Rate
☐ Synchronous Operation with Simultaneous Divide by 2, 4 and 8 Outputs
☐ ECL Compatible & GaAs Compatible Inputs and Outputs
☐ Extended Temperature Range: -55°C to +85°C
☐ 50 Ohm Impedance System Operation
☐ Asynchronous Master Clear and Enable for Down Counter Operation

DIGITAL SIGNAL PROCESSING IC PRODUCTS - SSI
3 GHz

☐ Master/Slave D Flip-Flop: HMD-11131-2
☐ Divide by Two/Prescaler: HMD-11301-2
☐ 5-Input NAND/AND Gate: HMD-11104-2
☐ 5-Input NOR/OR Gate: HMD-11101-2
☐ Dual 2-Input Exclusive OR Gate: HMD-11113-2
☐ Ultra High-Speed Comparator: HMD-11685-2 (Contact Factory Regarding Availability)

SIGNAL PROCESSING IC PRODUCTS - MSI

☐ Divide by 10/11 Variable Modulus Divider: HMD-11011-2
☐ Programmable Pulse Driver/Formatter: HMD-11502-2

(Contact Factory Regarding Availability)

GaAs DIGITAL IC EVALUATION KITS

☐ SSI IC Evaluation Kit for 16-pin packages: HMK-11SSI-2
☐ MSI IC Evaluation Kit for 32-pin packages: HMK-11MSI-1
☐ MSI Semi-custom/Custom IC Evaluation Kit for 48-pin packages: HMK-11MSI-3

GaAs CELL ARRAYS™ AND CUSTOM PRODUCTS

☐ MSI Level Semi-custom and Custom GaAs IC Designs
☐ Up to 300/Equivalent Gate Complexity Logic Designs

(Contact Factory For Details)

PACKAGING

☐ All parts are available in Hermetic Metal Flatpack packages
☐ The MSI Integrated Circuits are in 32-pin packages
☐ The SSI Integrated Circuits are in 16-pin packages
☐ The Cell Array is packaged in 48-pin Packages

Printed in U.S.A.

Data Subject to Change Without Prior Notification

GaAs DIGITAL IC
DIVIDE BY 2/4/8 BINARY COUNTER
HMD-11016-1 DC — 2.0 GHz OPERATION

PRODUCT DATA

HARRIS MICROWAVE SEMICONDUCTOR

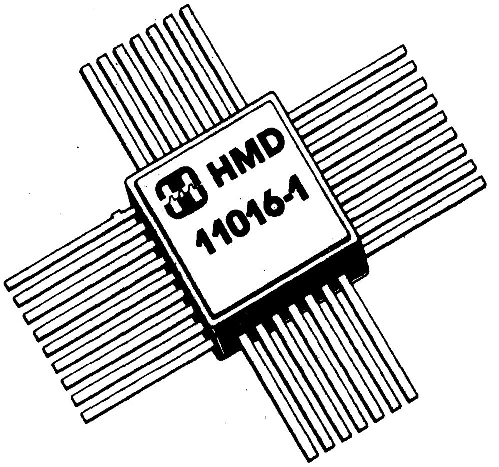

TRUTH TABLE

CLR	ENABLE	÷N OUT	DATA IN	FUNCTION
H	L	÷N	DI	Outputs ÷N
H	H	Latch	DI	Outputs latched
L	X	L	DI	Outputs low

NOTE: Master Clear, Data Enable = Logical High 0.0 V to -0.8 V; Logical Low -2.0 V.

LOGIC DIAGRAM

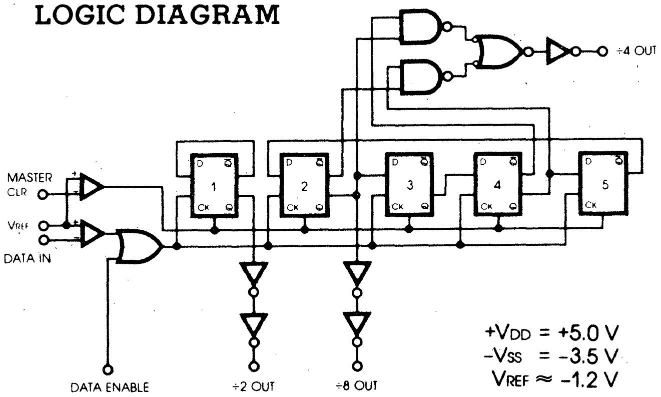

FIGURE 1

FEATURES

- ☐ 2.0 GHz data input rate
- ☐ ECL compatible and GaAs compatible I/Os
- ☐ Synchronous operation with simultaneous divide by 2, 4, and 8 outputs
- ☐ Asynchronous master clear and enable for down counter operation
- ☐ 50 ohm impedance system operation
- ☐ Single ended input/output
- ☐ Metal flatpack packaging for optimum performance in GHz transmission systems
- ☐ Reliable Ti/Pt/Au metallization system
- ☐ Temperature range: -55°C to +85°C

GENERAL DESCRIPTION

The HMD-11016-1 is a Gallium Arsenide Digital Integrated Circuit which has been designed by Harris Microwave Semiconductor to perform binary counter and fixed divide functions at input data rates in excess of those available with silicon-based units. Capable of specified performance over an expanded temperature range, the HMD-11016-1 performs fixed divide by two, four, and eight, and supplies these three outputs simultaneously to facilitate bit-steering applications. A data enable input permits the unit to be used as a (count down) binary counter.

Its compatibility with ECL and other GaAs products afford its use in a broad range of signal processing applications previously only possible at reduced throughput rates. Housed in a hermetic package designed to minimize parasitic and cross talk performance degradation, the HMD-11016-1 is suitable for use in applications requiring subnanosecond system response times and reliable operation.

The HMD-11016-1 is a member of the Harris Microwave Semiconductor HMD-11 family of small and medium scale GaAs ICs.

FUNCTION DESCRIPTION

The HMD-11016-1 contains five D-type flip-flops. These flip-flops are fully synchronous and are driven in parallel through Data In. The HMD-11016-1 acts as a binary counter 2/4/8 divider which accepts data inputs at frequencies up to 1800 MHz minimum. The first flip-flop is used as a binary element for the divide-by-two function with outputs at one half data rate input. The remaining flip-flops are used to develop the divide-by-eight output. The divide-by-four function is derived from the different internal phases of the divide-by-eight function with an output at one-fourth the data rate input. A separate reference voltage, V_{REF} (with ≤10 μA) must be supplied to the device. This reference voltage will provide input tuning capability for maximum frequency response, including performance across temperature ranges. V_{REF} is typically -1.2 V, but can be adjusted to optimize device performance.

DC CHARACTERISTICS: V_{DD} = +5.0 V, V_{SS} = -3.5 V

SYMBOL	PARAMETERS	LIMITS TYP	UNITS	CONDITIONS T_A = 25°C
I_{IH}	Input Current High	10	μA	$V_{IN} = V_{IH}$
I_{DD}	Supply Current	350	mA	Input & Output Open
I_{SS}	Supply Current	250	mA	Input & Output Open
V_{REF}	Reference Voltage	-1.2	V	I_{REF} ≤10μA, ECL Level
V_{OH}	Output Logical High	-0.7	V	50 Ω Output Load
V_{OL}	Output Logical Low	-1.8	V	50 Ω Output Load

DYNAMIC CHARACTERISTICS: V_{DD} = +5.0 V, V_{SS} = -3.5 V, V_{REF} ≈-1.2 V

SYMBOL	PARAMETERS	LIMITS MIN	LIMITS TYP	LIMITS MAX	UNITS	CONDITIONS T_A = 25°C
t_{PLH}' t_{PHL}	Propagation Delay[1]		1000		ps	See Figure 5
Data In	Max. Data Input Rate	1800	2000		MHz	See Figure 5
t_{TLH}' t_{THL}	Transition Time 20% to 80%, 80% to 20%		150		ps	See Figure 5
t_{QNH}	Clear to Q Out High		200		ps	See Figure 5 @ 2000 MHz
t_{QNL}	Clear to Q Out Low		200		ps	See Figure 5 @ 2000 MHz

NOTE: 1. Refer to Figure 2 for definition of propagation delay measurements.

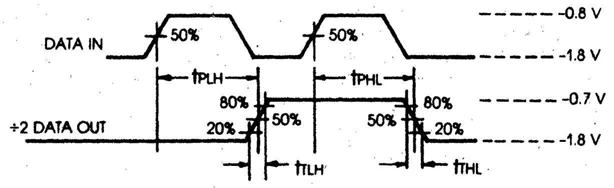

FIGURE 2 — TYPICAL WAVEFORM, DATA IN, DATA DIVIDE BY 2 (50Ω TERMINATION)

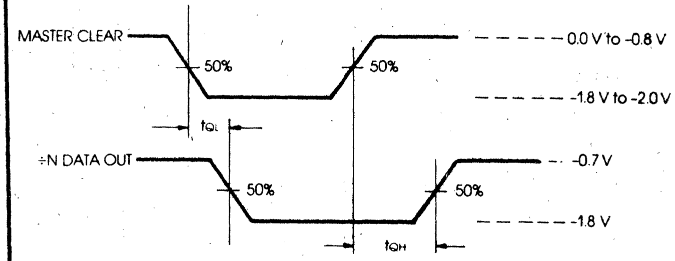

FIGURE 3 — ASYNCHRONOUS MASTER CLEAR (50 Ω TERMINATION)

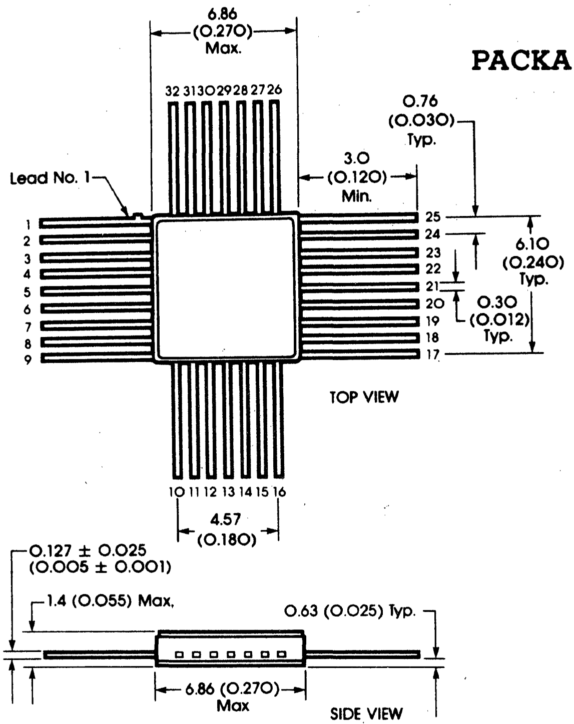
6.86
(0.270)
Max.
32 31 30 29 28 27 26
Lead No. 1
3.0
(0.120)
Min.
0.76
(0.030)
Typ.
1 2 3 4 5 6 7 8 9
25 24 23 22 21 20 19 18 17
6.10
(0.240)
Typ.
0.30
(0.012)
Typ.
TOP VIEW
10 11 12 13 14 15 16
4.57
(0.180)
0.127 ± 0.025
(0.005 ± 0.001)
1.4 (0.055) Max.
0.63 (0.025) Typ.
6.86 (0.270)
Max
SIDE VIEW

IC PACKAGE 1
Dimensions in millimeters (Inches)

PACKAGE/PIN CONFIGURATION

PIN NO.	SYMBOL & FUNCTION		PIN NO.	SYMBOL & FUNCTION	
1	GND	Ground (RF)	17	GND	Ground (RF)
2	DE	Data Enable	18	NC	No Connection
3	GND	Ground (RF)	19	GND	Ground (RF)
4	VREF	User Supplied Reference Voltage	20	DI	Data Input
			21	GND	Ground (RF)
5	GND	Ground (RF)	22	MC	Master Clear
6	÷2	÷2(Q) Output	23	GND	Ground (RF)
7	GND	Ground (RF)	24	NC	No Connection
8	÷8	÷8(Q) Output	25	GND	Ground (RF)
9	GND	Ground (RF)	26	GND	Ground (RF)
10	GND	Ground (RF)	27	+VDD	Supply Voltage
11	÷4	÷4(Q) Output	28	GND	Ground (DC)
12	GND	Ground (RF)	29	-VSS	Supply Voltage
13	-VSS	Supply Voltage	30	GND	Ground (RF)
14	GND	Ground (DC)	31	NC	No Connection
15	+VDD	Supply Voltage	32	GND	Ground (RF)
16	NC	No Connection			

NOTES:

1. Grounding Pins: 1, 3, 5, 7, 9, 10, 12, 14, 17, 19, 21, 23, 25, 26, 28, 30, 32.
2. Pins 14 & 28 are for DC returns, all others require RF grounding only.

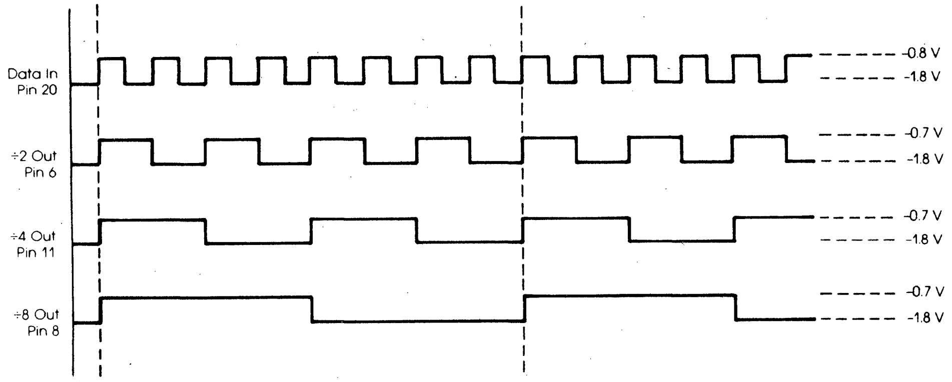

FIGURE 4 — DIVIDER OUTPUT WAVEFORM TIMING (50Ω TERMINATION)

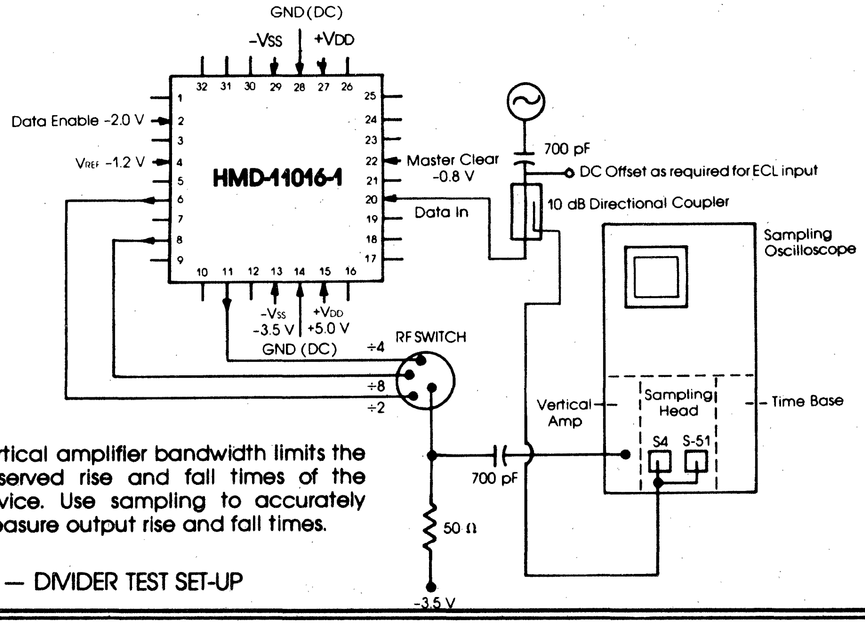
GND (DC)
-VSS
+VDD
32 31 30 29 28 27 26
25 24 23 22 21 20 19 18 17
1 2 3 4 5 6 7 8 9
10 11 12 13 14 15 16
Data Enable -2.0 V
VREF -1.2 V
HMD-11016-1
Master Clear
-0.8 V
Data In
700 pF
DC Offset as required for ECL input
10 dB Directional Coupler
Sampling Oscilloscope
-VSS
-3.5 V
+VDD
+5.0 V
GND (DC)
RF SWITCH
÷4
÷8
÷2
Vertical Amp
Sampling Head
S4
S-51
Time Base
700 pF
50 Ω
-3.5 V

NOTE: Vertical amplifier bandwidth limits the observed rise and fall times of the device. Use sampling to accurately measure output rise and fall times.

FIGURE 5 — DIVIDER TEST SET-UP

PRODUCT RATINGS

SYMBOL	PARAMETERS	MAXIMUM RATINGS[1]
V_{DD}	Drain Supply Voltage	+5.5 V
V_{SS}	Source Supply Voltage	-4.0 V
I_{OUT}	Output Current	60 mA
P_{DISS}	Power Dissipation	3.0 W
T_{STG}	Storage Temperature Range	-55°C to +150°C
T_{CASE}	Case Base Temperature Range	-55°C to +85°C

1. Permanent damage may result from operation at conditions beyond maximum ratings.

IC MOUNTING PROCEDURES

It is imperative that adequate heatsinking of the IC package be provided in the application circuit. The chip is die attached directly to the bottom of the case, and both the bottom and lid are grounded.

- The primary avenue for heat removal is through the bottom of the case to a heatsink at ground potential. Voids and gaps in the contact between the case and the heatsink are to be avoided.
- An electrically conductive attachment material is recommended. A conductive epoxy, such as Abel Stick 36-2, 88-1 (or equivalent), or a lead-tin solder (with flux) may be used.
- Supplemental heatsinking for the case lid and forced air cooling can lower the device temperature further.

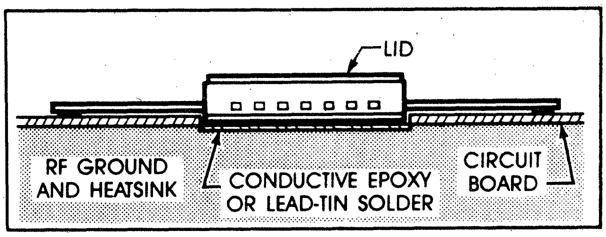

IC HANDLING PROCEDURES

Permanent damage to the device can result from inadequate protection against excessive voltages on the device due to static charge buildup, test equipment transients and inductive pickup. Grounding of equipment and personnel during the handling and testing of GaAs ICs, and control of the unit's test conditions and environment, should be standard procedures.

Elimination or reduction of damage due to static charge or other causes can be accomplished as follows:

- Use conductive work stations. Metallic or conductive plastic tops on work benches connected to ground help eliminate static buildup.
- Ground all handling equipment and soldering iron tips.
- Ground all handling personnel with a conductive bracelet through 1M ohm to ground. The 1M ohm resistor helps protect the handler from electroshock.
- Certain materials, highly dielectric in nature, will hold or aid in the generation of a static charge. Smocks, clothing, and shoes of these insulating materials (notably nylon) should not be worn in areas where devices are handled. Natural materials such as cotton, etc. should be used to minimize charge generation capacity.
- Control relative humidity to as high a level as practical (RH 50%).
- Ionized air blowers reduce charge buildup in areas where ground is not possible or desirable.
- Devices should be in conductive carriers during all phases of transport. Leads may be shorted by metallic carriers, conductive foam or foil.
- Mount and remove GaAs ICs with power removed.
- Do not exceed the maximum product ratings specified.

APPLICATIONS INFORMATION

- All unused device inputs should be connected to RF ground to prevent electrostatic charge damage.
- In order to prevent high frequency oscillations, a 0.1μf capacitor is recommended between the IC's ground and voltage supplies.
- It is recommended that for best performance, microstrip, stripline or coplanar transmission lines be used.
- When driving ECL, stub lengths can be extended up to 1 inch. The termination resistor should be connected to -3.5 volts for full ECL. A -2 volt supply can also be used for a lower amplitude output.
- When laying out components, the designer must meet two conditions. First, R_T must terminate the transmission line at only one point. Second, any unterminated stub lengths must be kept under 0.25 inches for driving GaAs circuits.
- V_{REF} of -1.2 V ±0.2 V must be supplied to the GaAs devices in order to fine-tune their maximum Data In performance, including performance across operating temperature range.
- IC inputs and outputs are matched for use with 50 ohm impedance systems (35 to 65 ohms). Output lines can drive 35 to 65 ohms terminating resistor loads and up to 1 pf of capacitance (at 125 ps rise and fall times).

HARRIS MICROWAVE SEMICONDUCTOR, 1530 McCarthy Boulevard, Milpitas, CA 95035, Telephone: (408) 262-2222 TWX: (910) 338-2247
Printed in U.S.A. Data Subject to Change Without Prior Notification 8-11016-1B©

GaAs DIGITAL IC
FOUR BIT UNIVERSAL SHIFT REGISTER
HMD-12141-1 DC — 1.3 GHz OPERATION

PRODUCT DATA

HARRIS MICROWAVE SEMICONDUCTOR

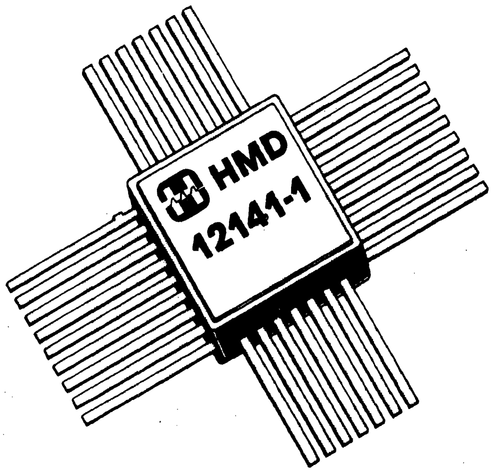

TRUTH TABLE

SELECT S_0	S_1	OPERATING MODE	OUTPUTS $Q_{0(t+1)}$	$Q_{1(t+1)}$	$Q_{2(t+1)}$	$Q_{3(t+1)}$
L	L	Parallel Entry	P_0	P_1	P_2	P_3
L	H	Shift Right	D_R	Q_{0t}	Q_{1t}	Q_{2t}
H	L	Shift Left	Q_{1t}	Q_{2t}	Q_{3t}	D_L
H	H	Hold	Q_{0t}	Q_{1t}	Q_{2t}	Q_{3t}

t and t + 1 refers to the time before and after the positive going clock edge.

FEATURES

- ☐ 1.3 GHz clock speed
- ☐ ECL compatible and GaAs compatible I/Os
- ☐ Serial or parallel I/O
- ☐ Shift right, shift left, parallel, or hold
- ☐ Flatpack packaging for optimum performance in GHz transmission systems
- ☐ Reliable Ti/Pt/Au metallization system

GENERAL DESCRIPTION

The HMD-12141-1 is a Gallium Arsenide Digital Integrated Circuit which has been designed by Harris Microwave Semiconductor to perform shift register functions at clock rates in excess of those available with ECL products. Capable of specified performance over an expanded temperature range, the HMD-12141-1 performs shift right, shift left, serial/parallel in, serial/parallel out and hold operations using the on-chip decoder.

Its serial/parallel processing capability, combined with its compatibility with ECL and other GaAs products afford its use in a broad range of signal processing applications previously only possible at reduced throughput rates.

Housed in a hermetic package designed to minimize parasitic and cross talk performance degradation, the HMD-12141-1 is suitable for use in applications requiring subnanosecond system response times and reliable operation.

The HMD-12141-1 is a member of the Harris Microwave Semiconductor HMD family of small and medium scale GaAs ICs.

LOGIC DIAGRAM

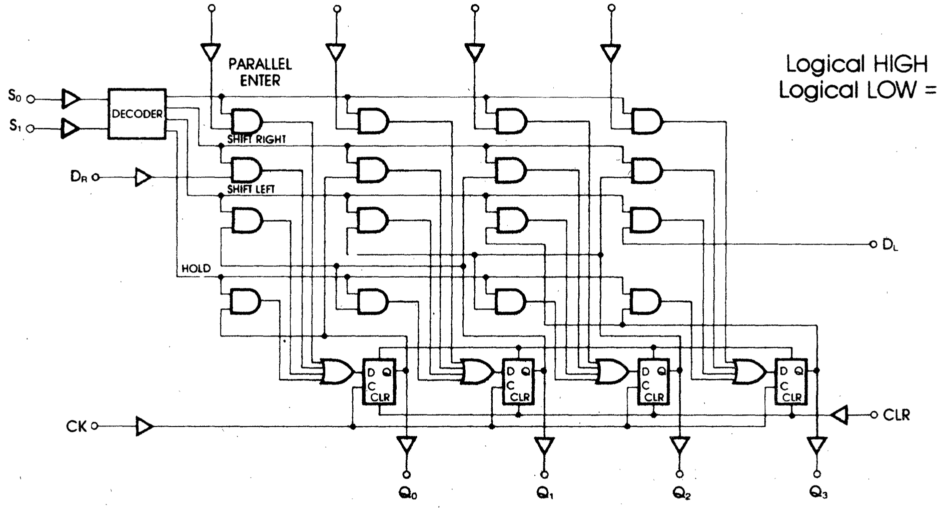

$+V_{DD} = +5.0$ V
$-V_{SS} = -3.5$ V
Logical HIGH = 0.0 V to -0.8 V
Logical LOW = -1.8 V to -2.0 V

Figure 1

FUNCTION DESCRIPTION

The HMD-12141-1 contains four clocked D-type flip-flops with individual inputs (P_n) and outputs (Q_n) for parallel operation, and with serial inputs (D_n) and steering logic for bidirectional shifting. The flip-flops accept input data one set-up time before the positive going transition of the clock pulse, and their outputs respond one propagation delay after this rising clock edge.

The circuit operating mode is determined by the Select inputs S_0 and S_1, which are internally decoded to select either "parallel entry," "hold," "shift left" or "shift right" as described in the Truth Table. In normal operating mode, the clear is set at -0.8 V. Clear is operated by the waveform shown in Figure 3.

CLEAR	Outputs Q_0 - Q_3
H	Normal Operation
L	Outputs Low

DC CHARACTERISTICS: V_{DD} = +5.0 V, V_{SS} = -3.5 V

SYMBOL	PARAMETERS	LIMITS TYP	UNITS	CONDITIONS T_A = 25°C
I_{IH}	Input Current High	1.0	μA	V_{IN} = V_{IHA}
I_{DD}	Supply Current	220	mA	Input & Output Open
I_{SS}	Supply Current	180	mA	Input & Output Open

DYNAMIC CHARACTERISTICS: V_{DD} = +5.0 V, V_{SS} = -3.5 V

SYMBOL	PARAMETERS	MIN	LIMITS TYP	MAX	UNITS	CONDITIONS T_A = 25°C
t_{PHL}, t_{PLH}	Propagation Delay		900		ps	See Figure 4
f_{SHIFT}	Max. Shift Frequency (CK)	1000	1300		MHz	See Shift Right Frequency Test, Fig. 5
t_{TLH}, t_{THL}	Transition Time 20% to 80%, 80% to 20%		220		ps	See Figure 4
t_s	Set-Up Time		220		ps	
t_h	Hold Time		0		ps	
t_{QH}	Clear to Q Out High		—		ps	See Figure 3
t_{QL}	Clear to Q Out Low		675		ps	Clear Input to Output

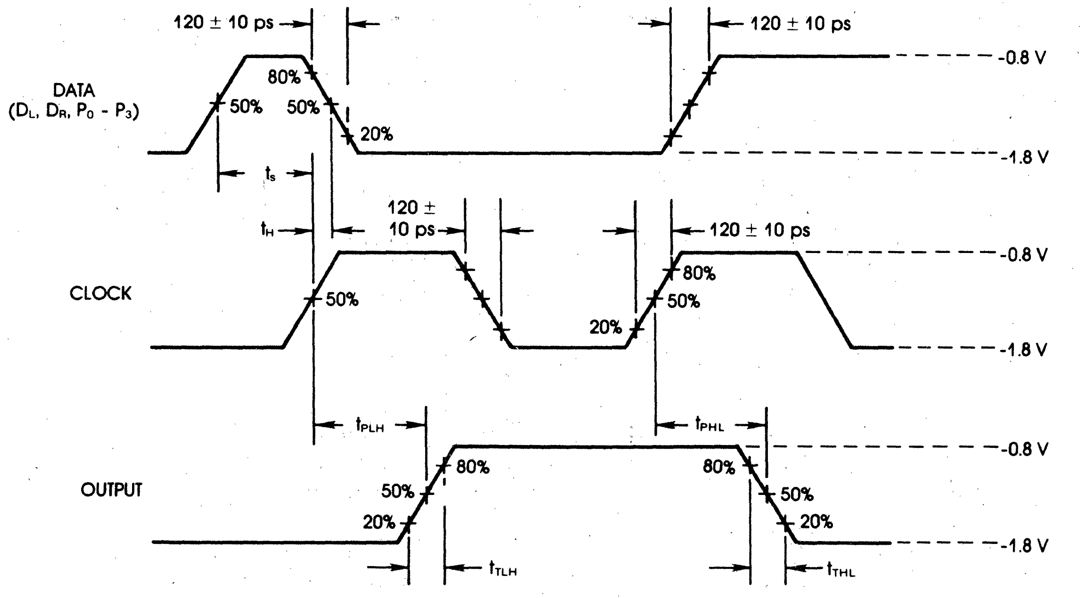

Figure 2 — WAVEFORMS, CLOCK, DATA INPUT and DATA OUTPUT (50 Ω Termination)

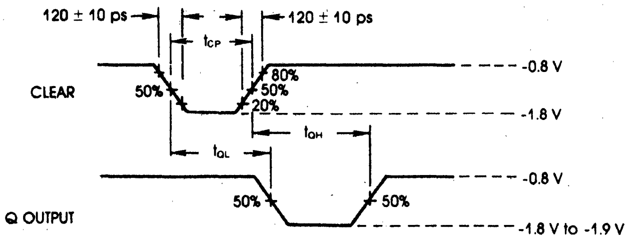

120 ± 10 ps
t_{CP}
120 ± 10 ps
CLEAR
50%
80%
50%
20%
-0.8 V
-1.8 V
t_{QH}
t_{QL}
-0.8 V
Q OUTPUT
50%
50%
-1.8 V to -1.9 V

CLEAR	Outputs Q_0 - Q_3
H	Normal Operation
L	Outputs Low

NOTE: In this example the Data Input is at a Logical Low of -1.8V.

Figure 3 — ASYNCHRONOUS CLEAR (50 Ω Termination)

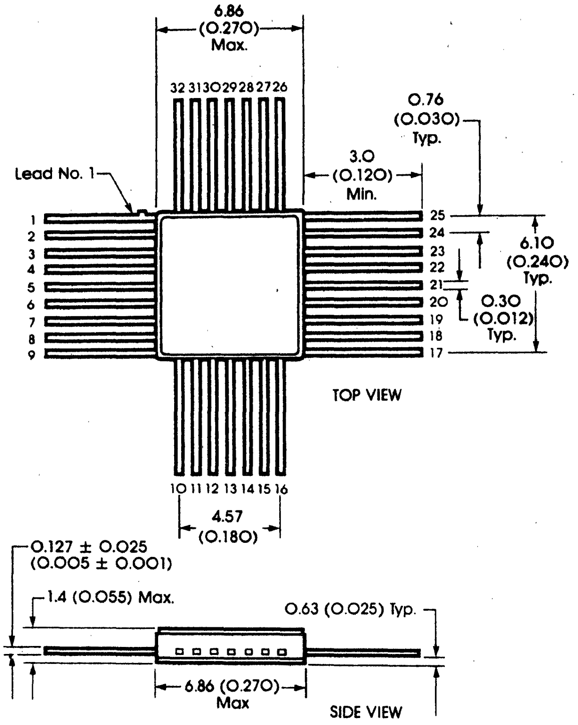

6.86 (0.270) Max.
32 31 30 29 28 27 26
0.76 (0.030) Typ.
3.0 (0.120) Min.
Lead No. 1
1
2
3
4
5
6
7
8
9
25
24
23
22
21
20
19
18
17
6.10 (0.240) Typ.
0.30 (0.012) Typ.
TOP VIEW
10 11 12 13 14 15 16
4.57 (0.180)
0.127 ± 0.025 (0.005 ± 0.001)
1.4 (0.055) Max.
0.63 (0.025) Typ.
6.86 (0.270) Max
SIDE VIEW

IC PACKAGE 1
Dimensions in millimeters (Inches)

PACKAGE PIN CONFIGURATION

PIN NO.	SYMBOL & FUNCTION		PIN NO.	SYMBOL & FUNCTION	
1	GND	Ground (RF)	17	Q_3	Data Output
2	P_1	Parallel Input	18	GND	Ground (RF)
3	GND	Ground (RF)	19	CLR	Master Clear
4	P_0	Parallel Input	20	GND	Ground (RF)
5	D_R	Data Right	21	CK	Clock
6	GND	Ground (RF)	22	GND	Ground (RF)
7	NC	No Connection	23	D_L	Data Left
8	GND	Ground (RF)	24	P_3	Data Input
9	Q_0	Data Output	25	GND	Ground (RF)
10	GND	Ground (RF)	26	NC	No Connection
11	Q_1	Data Output	27	$+V_{DD}$	Supply Voltage
12	$-V_{SS}$	Supply Voltage	28	GND	Ground (DC)
13	GND	Ground (DC)	29	$-V_{SS}$	Supply Voltage
14	$+V_{DD}$	Supply Voltage	30	P_2	Parallel Input
15	Q_2	Data Output	31	S_1	Select Input
16	GND	Ground (RF)	32	S_0	Select Input

NOTES:
Grounding Pins: 1, 3, 6, 8, 10, 13, 16, 18, 20, 22, 25, 28
Pins 13 & 28 are for DC returns, all others require RF grounding only.

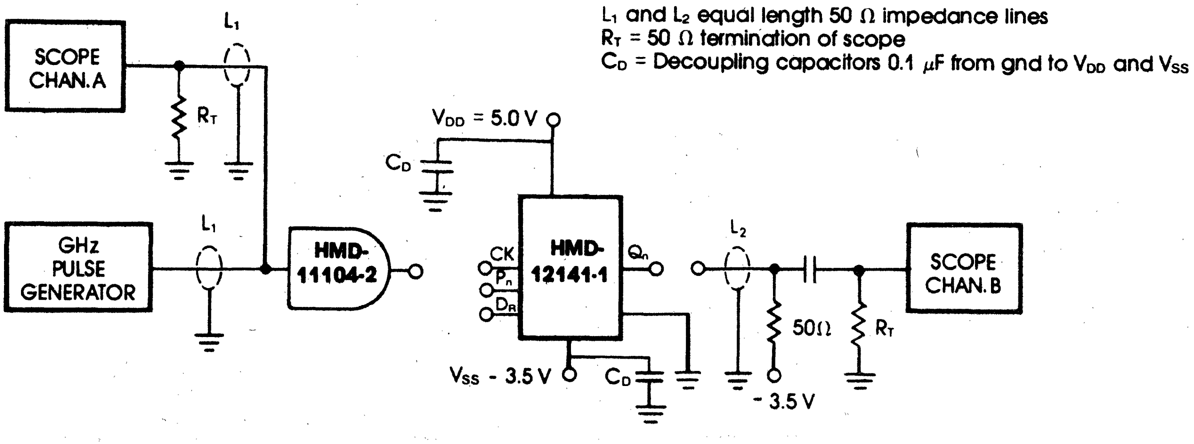

SCOPE CHAN. A
L_1
R_T
GHz PULSE GENERATOR
L_1
HMD-11104-2
V_{DD} = 5.0 V
C_D
CK
P_n
D_R
HMD-12141-1
Q_n
V_{SS} - 3.5 V
C_D
L_2
50Ω
R_T
- 3.5 V
SCOPE CHAN. B

L_1 and L_2 equal length 50 Ω impedance lines
R_T = 50 Ω termination of scope
C_D = Decoupling capacitors 0.1 μF from gnd to V_{DD} and V_{SS}

Figure 4 — TIMING MEASUREMENTS TEST SET-UP

PRODUCT RATINGS

SYMBOL	PARAMETERS	MAXIMUM RATINGS[1]
V_{DD}	Drain Supply Voltage	+5.5V
V_{SS}	Source Supply Voltage	-4.0V
I_{OUT}	Output Current at Q_0 - Q_3	60mA
P_{DISS}	Power Dissipation	3.0W
T_{STG}	Storage Temperature Range	-55°C to +150°C
T_{CASE}	Case Base Temperature Range	-55°C to +85°C

1. Permanent damage may result from operation at conditions beyond maximum ratings.

IC MOUNTING PROCEDURES

It is imperative that adequate heatsinking of the IC package be provided in the application circuit. The chip is die attached directly to the bottom of the case and both the bottom and lid are grounded.

- The primary avenue for heat removal is through the bottom of the case to a heatsink at ground potential. Voids and gaps in the contact between the case and the heatsink are to be avoided.
- An electrically conductive attachment material is recommended. A conductive epoxy, such as Abel Stick 36-2, 88-1, (or equivalent), or a lead-tin solder (with flux) may be used.
- Supplemental heatsinking for the case lid and forced air cooling can lower the device temperature further.

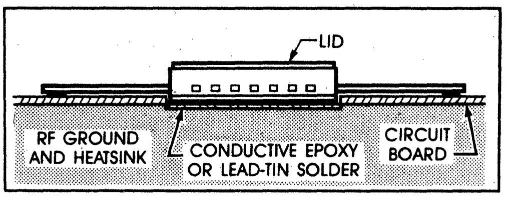
LID
RF GROUND AND HEATSINK
CONDUCTIVE EPOXY OR LEAD-TIN SOLDER
CIRCUIT BOARD

IC HANDLING PROCEDURES

Permanent damage to the device can result from inadequate protection against excessive voltages on the device due to static charge buildup, test equipment transients and inductive pickup. Grounding of equipment and personnel during the handling and testing of GaAs ICs, and control of the unit's test conditions and environment, should be standard procedures.

Elimination or reduction of damage due to static charge or other causes can be accomplished as follows:

- Use conductive work stations. Metallic or conductive plastic tops on work benches connected to ground help eliminate static buildup.
- Ground all handling equipment and soldering iron tips.
- Ground all handling personnel with a conductive bracelet through 1M ohm to ground. The 1M ohm resistor helps protect the handler from electroshock.
- Certain materials, highly dielectric in nature, will hold or aid in the generation of a static charge. Smocks, clothing, and shoes of these insulating materials (notably nylon) should not be worn in areas where devices are handled. Natural materials such as cotton, etc. should be used to minimize charge generation capacity.
- Control relative humidity to as high a level as practical (RH 50%).
- Ionized air blowers reduce charge buildup in areas where ground is not possible or desirable.
- Devices should be in conductive carriers during all phases of transport. Leads may be shorted by metallic carriers, conductive foam or foil.
- Mount and remove GaAs ICs with power removed.
- Do not exceed the maximum product ratings specified.

SHIFT RIGHT FREQUENCY TEST

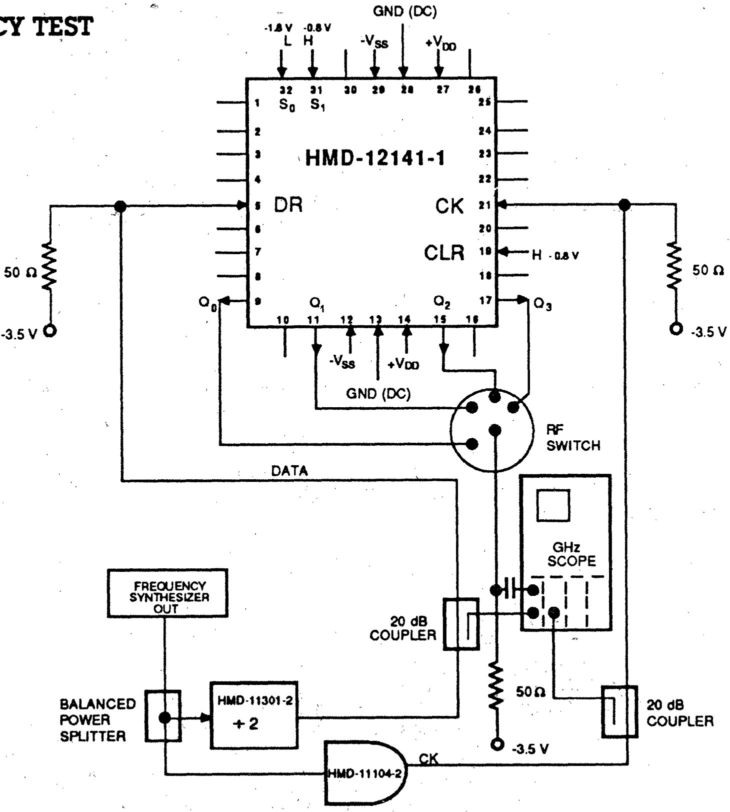
GND (DC)
-1.8 V L
-0.8 V H
-VSS
+VDD
32 S0
31 S1
30
29
28
27
26
1
2
3
4
5 DR
6
7
8
9
25
24
23
22
21 CK
20
19 CLR
18
17
HMD-12141-1
H -0.8 V
Q0
Q1
Q2
Q3
10 11 12 13 14 15 16
-VSS
+VDD
GND (DC)
50 Ω
-3.5 V
50 Ω
-3.5 V
RF SWITCH
DATA
GHz SCOPE
FREQUENCY SYNTHESIZER OUT
20 dB COUPLER
50 Ω
-3.5 V
20 dB COUPLER
BALANCED POWER SPLITTER
HMD-11301-2 ÷2
HMD-11104-2
CK

Figure 5

HARRIS MICROWAVE SEMICONDUCTOR, 1530 McCarthy Boulevard, Milpitas, CA 95035, Telephone: (408) 262-2222 TWX: (910) 338-2247
Printed in U.S.A.   Data Subject to Change Without Prior Notification   8-12141-1A©

SSI Logic Elements

PRODUCT DATA

HARRIS MICROWAVE SEMICONDUCTOR

MASTER/SLAVE D FLIP-FLOP: HMD-11131-2

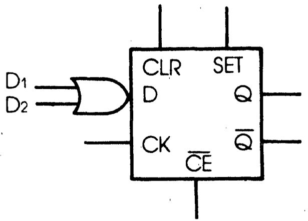

- ☐ 3.0 GHz Input Clock Speed
- ☐ Complementary ECL and GaAs Compatible I/Os
- ☐ Asynchronous Clear & Set Inputs
- ☐ $\overline{CE}$ Input can be used to fine-tune device performance
- ☐ Propagation Delay of 400 ps Typical
- ☐ Extended Temperature Range -55°C to +85°C

DIVIDE BY TWO/PRESCALER: HMD-11301-2

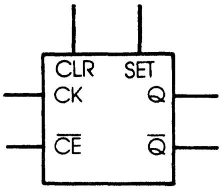

- ☐ 3.0 GHz Clock Speed
- ☐ Complementary ECL and GaAs Compatible I/Os
- ☐ 50 ohm Line Driving Capability
- ☐ $\overline{CE}$ can be used to fine-tune device performance

5-INPUT NAND/AND GATE: HMD-11104-2

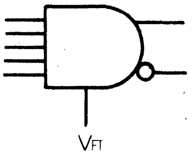

- ☐ 3.0 GHz Data Input Rate
- ☐ ECL and GaAs Compatible I/Os
- ☐ Propagation Delay of 350 ps Typical
- ☐ V_{FT} Input can be used to fine-tune device performance

5-INPUT NOR/OR GATE: HMD-11101-2

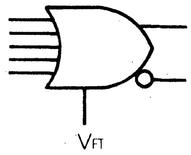

- ☐ 3.0 GHz Data Input Rate
- ☐ Extended Temperature Range -55°C to +85°C
- ☐ Propagation Delay of 350 ps Typical
- ☐ ECL and GaAs Compatible I/Os
- ☐ V_{FT} Input can be used to fine-tune device performance

DUAL 2-INPUT EXCLUSIVE OR GATE: HMD-11113-2

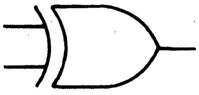

- ☐ 2.8 GHz Data Input Rate
- ☐ Propagation Delay of 300 ps Typical
- ☐ Extended Temperature Range -55°C to +85°C
- ☐ 50 ohm Line Driving Capability

ULTRA-HIGH-SPEED COMPARATOR: HMD-11685-2

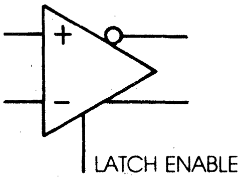

- ☐ 3.0 Gbit Data Rates
- ☐ Latch Enable for Sample and Hold Mode
- ☐ 50 ohm Line Driving Capability
- ☐ Propagation Delay of 350 ps Typical
- ☐ Transition Time 80 ps Typical

GaAs SSI IC EVALUATION KIT: HMD-11SSI-2

- ☐ Universal design allows use with all Harris Microwave SSI GaAs ICs
- ☐ Includes all necessary piece parts plus applications and testing information

SSI Packaging: 16-pin Hermetic Metal Flatpack (.230 in. sq. typical).
Power supply requirements are: $+V_{DD} = +5.0$ V, $V_{SS} = -3.5$ V.
V_{FT} is provided internally, however, a user available terminal is provided to fine-tune device performance. Optimum performance can be achieved if a separate $\overline{CE}$ or V_{FT} input is applied. Note that V_{FT} or $\overline{CE}$ is an optional connection.

Data Subject to Change Without Prior Notification

SELECTOR GUIDE

High-Speed CMOS FIFOs

				Power (typical)		
		Max. Speed (ns)		Oper.	Standby	
Part Number	Description	Mil.	Com'l.	(mW)	(mW)	Availability
IDT7201	512 × 9 replaces Mostek MK4501	50	50	250	500	NOW
IDT7202	1024 × 9 largest monolithic FIFO available in the industry	50	50	250	500	NOW
IDT7M203	2K × 9 FIFO module using four IDT7201s	65	65	630	2500	NOW
IDT7M204	4K × 9 FIFO module using four IDT7202s is the largest FIFO available in the industry	65	65	630	2500	NOW

High-Speed CMOS Parallel Multipliers

				Power (typical)		
		Max. Speed (ns)		Oper.	Standby	
Part Number	Description	Mil.	Com'l.	(mW)	(mW)	Availability
IDT7212	12 × 12–pin and functionally compatible with TRW MPY012H	55	45	150	500	NOW
IDT7213	12 × 12–with single clock architecture	55	45	150	500	NOW
IDT7216	16 × 16–pin and functionally compatible with TRW MPY016H/K and AMD Am29516	70	55	150	500	NOW
IDT7217	16 × 16–with single clock architecture; pin and functionally compatible with AMD Am29517	70	55	150	500	NOW

High-Speed CMOS Parallel Multiplier-Accumlators

				Power (typical)		
		Max. Speed (ns)		Oper.	Standby	
Part Number	Description	Mil.	Com'l.	(mW)	(mW)	Availability
IDT7209	12 × 12–pin and functionally compatible with TRW TDC1009J	65	55	200	500	NOW
IDT7210	16 × 16–with 35-bit output; pin and functionally compatible with TRW TDC1010J	75	65	200	500	NOW
IDT7243	16 × 16–with 19-bit output; pin and functionally compatible with TRW TDC1043	75	65	200	500	NOW

Integrated Device Technology, Inc.

SELECTOR GUIDE

High-Speed CMOS Memory Interface Products

Part Number	Description	Max. Speed (ns) Mil.	Max. Speed (ns) Com'l.	Power (typical) Oper. (mW)	Power (typical) Standby (μW)	Availability
IDT54/74FCT138	1-of-8 Decoder	12.0	9.0	10.0	5.0	NOW
IDT54/74FCT139	Dual 1-of-4 Decoder	12.0	9.0	10.0	5.0	NOW
IDT54/74FCT182	Carry Lookahead Generator	11.5	9.0	10.0	5.0	NOW
IDT54/74FCT240	Octal Buffer	9.0	8.0	10.0	5.0	NOW
IDT54/74FCT244	Octal Buffer	7.0	6.5	10.0	5.0	NOW
IDT54/74FCT245	Octal Bidirectional Transceiver	7.5	7.0	10.0	5.0	NOW
IDT54/74FCT273	Octal D Flip-Flop	15.0	13.0	10.0	5.0	NOW
IDT54/74FCT299	Octal Universal Shift Register	16.0	10.0	10.0	5.0	NOW
IDT54/74FCT373	Octal Transparent Latch	8.5	8.0	10.0	5.0	NOW
IDT54/74FCT374	Octal D Flip-Flop	11.0	10.0	10.0	5.0	NOW
IDT54/74FCT377	Octal D Flip-Flop	15.0	13.0	10.0	5.0	NOW
IDT54/74FCT521	8-Bit Comparator	15.0	11.0	10.0	5.0	NOW
IDT54/74FCT533	Octal Transparent Latch	12.0	10.0	10.0	5.0	NOW
IDT54/74FCT534	Octal D Flip-Flop	11.0	10.0	10.0	5.0	NOW
IDT54/74FCT640	Octal Bidirectional Transceiver	8.0	7.0	10.0	5.0	NOW
IDT54/74FCT645	Octal Bidirectional Transceiver	11.0	9.5	10.0	5.0	NOW
IDT54/74AHCT138	1-of-8 Decoder	27.0	22.0	3.5	5.0	NOW
IDT54/74AHCT139	Dual 1-of-4 Decoder	25.0	20.0	3.5	5.0	NOW
IDT54/74AHCT182	Carry Lookahead Generator	15.0	12.0	3.5	5.0	NOW
IDT54/74AHCT240	Octal Buffer	12.0	9.0	3.5	5.0	NOW
IDT54/74AHCT244	Octal Buffer	13.0	10.0	3.5	5.0	NOW
IDT54/74AHCT245	Octal Bidirectional Transceiver	15.0	10.0	3.5	5.0	NOW
IDT54/74AHCT273	Octal D Flip-Flop	17.0	15.0	3.5	5.0	NOW
IDT54/74AHCT299	Universal Shift Register	20.0	14.0	3.5	5.0	NOW
IDT54/74AHCT373	Octal Transparent Latch	19.0	16.0	3.5	5.0	NOW
IDT54/74AHCT374	Octal D Flip-Flop	18.0	16.0	3.5	5.0	NOW
IDT54/74AHCT377	Octal D Flip-Flop	18.0	16.0	3.5	5.0	NOW
IDT54/74AHCT521	8-Bit Comparator	18.0	14.0	3.5	5.0	NOW
IDT54/74AHCT533	Octal Transparent Latch	24.0	19.0	3.5	5.0	NOW
IDT54/74AHCT534	Octal D Flip-Flop	18.0	16.0	3.5	5.0	NOW
IDT54/74AHCT640	Octal Bidirectional Transceiver	14.0	11.0	3.5	5.0	NOW
IDT54/74AHCT645	Octal Bidirectional Transceiver	15.0	10.0	3.5	5.0	NOW

Integrated Device Technology, Inc

FAST™ CMOS COMPATIBLE (FCT) LOGIC SERIES

IDT54/74FCT

FEATURES:

- Equivalent to FAST™ speeds and output drive over full temperature and voltage supply extremes
- CMOS power levels (5μW typ. static)
- Both CMOS and TTL output compatible
- Substantially lower input current levels than FAST™ (5μA max.)
- 100% product assurance screening to MIL-STD-883, Class B is available
- JEDEC standard pinout for DIP and LCC

DESCRIPTION:

The "FCT" series is a family of industry standard memory interface circuits that are pin compatible, functional equivalent replacements to the Fairchild FAST™ series, but at CMOS power levels (1/10 operation, 1/100 standby).

DC ELECTRICAL CHARACTERISTICS OVER OPERATING RANGE

Following Conditions Apply Unless Otherwise Specified:

T_A = 0°C to +70°C V_{CC} = 5.0V ± 5% Min. = 4.75V Max. = 5.25V (Commercial) V_{LC} = 0.2V
T_A = -55°C to +125°C V_{CC} = 5.0V ± 10% Min. = 4.50V Max. = 5.50V (Military) V_{HC} = V_{CC} - 0.2V

SYMBOL	PARAMETER	TEST CONDITIONS[1]		MIN.	TYP.[2]	MAX.	UNIT
V_{IH}	Input HIGH Level	Guaranteed Logic High Level		2.0	—	—	V
V_{IL}	Input LOW Level	Guaranteed Logic Low Level		—	—	0.8	V
I_{IH}	Input HIGH Current	V_{CC} = Max., V_{IN} = V_{CC}		—	—	5	μA
I_{IL}	Input LOW Current	V_{CC} = Max., V_{IN} = GND		—	—	-5	μA
I_{SC}	Short Circuit Current	V_{CC} = Max.[3]		-60	-120	—	mA
V_{OH}	Output HIGH Voltage	V_{CC} = 3V, V_{IN} = V_{LC} or V_{HC}, I_{OH} = -32μA		V_{HC}	V_{CC}	—	V
		V_{CC} = Min. V_{IN} = V_{IH} or V_{IL}	I_{OH} = -300μA	V_{HC}	V_{CC}	—	
			I_{OH} = -12mA MIL	2.4	4.3	—	
			I_{OH} = -15mA COM	2.4	4.3	—	
V_{OL}	Output LOW Voltage	V_{CC} = 3V, V_{IN} = V_{LC} or V_{HC}, I_{OL} = 300μA		—	GND	V_{LC}	V
		V_{CC} = Min. V_{IN} = V_{IH} or V_{IL}	I_{OL} = 300μA	—	GND	V_{LC}	
			I_{OL} = 32mA MIL[6]	—	0.3	0.5	
			I_{OL} = 48mA COM[6]	—	0.3	0.5	
I_{CCQC}	Quiescent Power Supply Current (CMOS Inputs)	V_{CC} = Max. $V_{HC} \le V_{IN} \le V_{LC}$ f = 0		—	0.001	2.0	mA
I_{CCQT}	Quiescent Power Supply Current (TTL Inputs)	V_{CC} = Max. V_{IN} = 3.4V[4]		—	0.5	2.5	mA
I_{CCD}	Dynamic Power Supply Current	V_{CC} = Max. Outputs Open One Bit Toggling 50% Duty Cycle	$V_{HC} \le V_{IN} \le V_{LC}$	—	0.15	0.3	mA/ MHz
I_{CC}	Total Power Supply[5] Current	V_{CC} = Max. f = 10 MHz Outputs Open One Bit Toggling 50% Duty Cycle	$V_{HC} \le V_{IN} \le V_{LC}$	—	1.5	5.0	mA
			V_{IN} = 3.4V[4]	—	2.0	6.3	

NOTES:

1. For conditions shown as max. or min., use appropriate value specified under Electrical Characteristics.
2. Typical values are at V_{CC} = 5.0V, +25°C ambient and maximum loading.
3. Not more than one output should be shorted at one time. Duration of the short circuit test should not exceed one second.
4. Per TTL driven input (V_{IN} = 3.4V); all other inputs at V_{CC} or GND.
5. $I_{CC} = I_{CCQC} + (I_{CCQT} \times N_T) + (I_{CCD} \times f \times N) + (I_{CCQT} \times D \times N_D)$; N = Total number of inputs toggling; f = Frequency in MHz; D = Percent high duty cycle; N_T = Number of TTL statically driven inputs (V_{IN} = 3.4V); N_D = Number of TTL dynamically driven inputs (V_{IN} = 3.4V)
6. 48mA Military, 64mA Commercial for buffers and transceivers.

FAST is a trademark of Fairchild Camera and Instrument.

MILITARY AND COMMERCIAL TEMPERATURE RANGES **OCTOBER 1985**

©1985 Integrated Device Technology, Inc.

Printed in U.S.A.

Integrated Device Technology, Inc.

ADVANCED HIGH-SPEED CMOS TTL-COMPATIBLE (AHCT) LOGIC SERIES

IDT54/74AHCT

FEATURES:

- Equivalent to ALS speeds and output drive over full temperature and voltage supply extremes
- CMOS power levels (5μW typ. static)
- Both CMOS and TTL output compatible
- Substantially lower input current levels than ALS (5μA max.)
- 100% product assurance screening to MIL-STD-883, Class B is available
- JEDEC standard pinout for DIP and LCC

DESCRIPTION:

The "AHCT" series is a family of industry standard memory interface circuits that are pin compatible, functional equivalent replacements to the bipolar ALS series, but at CMOS power levels (1/10 operation, 1/100 standby).

DC ELECTRICAL CHARACTERISTICS OVER OPERATING RANGE

Following Conditions Apply Unless Otherwise Specified:

T_A = 0°C to +70°C V_{CC} = 5.0V ± 5% Min. = 4.75V Max. = 5.25V (Commercial) V_{LC} = 0.2V

T_A = -55°C to +125°C V_{CC} = 5.0V ± 10% Min. = 4.50V Max. = 5.50V (Military) V_{HC} = V_{CC} - 0.2V

SYMBOL	PARAMETER	TEST CONDITIONS[1]		MIN.	TYP.[2]	MAX.	UNIT
V_{IH}	Input HIGH Level	Guaranteed Logic High Level		2.0	—	—	V
V_{IL}	Input LOW Level	Guaranteed Logic Low Level		—	—	0.8	V
I_{IH}	Input HIGH Current	V_{CC} = Max., V_{IN} = V_{CC}		—	—	5	μA
I_{IL}	Input LOW Current	V_{CC} = Max., V_{IN} = GND		—	—	-5	μA
I_{SC}	Short Circuit Current	V_{CC} = Max.[3]		-60	-100	—	mA
V_{OH}	Output HIGH Voltage	V_{CC} = 3V, V_{IN} = V_{LC} or V_{HC}, I_{OH} = -32μA		V_{HC}	V_{CC}	—	V
		V_{CC} = Min. V_{IN} = V_{IH} or V_{IL}	I_{OH} = -150μA	V_{HC}	V_{CC}	—	
			I_{OH} = -12mA MIL	2.4	4.3	—	
			I_{OH} = -15mA COM	2.4	4.3	—	
V_{OL}	Output LOW Voltage	V_{CC} = 3V, V_{IN} = V_{LC} or V_{HC}, I_{OL} = 300μA		—	GND	V_{LC}	V
		V_{CC} = Min. V_{IN} = V_{IH} or V_{IL}	I_{OL} = 300μA	—	GND	V_{LC}	
			I_{OL} = 14mA MIL	—	—	0.4	
			I_{OL} = 24mA COM	—	—	0.5	
I_{OZ}	Off State (High Impedance) Output Current	V_{CC} = Max.	V_O = 0.4V	—	—	-10	μA
			V_O = 2.4V	—	—	10	
I_{CCQC}	Quiescent Power Supply Current (CMOS Inputs)	V_{CC} = Max. $V_{HC} \leq V_{IN} \leq V_{LC}$ f = 0		—	0.001	2.0	mA
I_{CCQT}	Quiescent Power Supply Current (TTL Inputs)	V_{CC} = Max. V_{IN} = 3.4V[4]		—	0.5	2.0	mA
I_{CCD}	Dynamic Power Supply Current	V_{CC} = Max. Outputs Open $\overline{OE}_N$ = GND One Bit Toggling 50% Duty Cycle	$V_{HC} \leq V_{IN} \leq V_{LC}$	—	0.15	0.3	mA/ MHz
I_{CC}	Total Power Supply[5] Current	V_{CC} = Max. f = 1 MHz Outputs Open $\overline{OE}_N$ = GND One Bit Toggling 50% Duty Cycle	$V_{HC} \leq V_{IN} \leq V_{LC}$	—	0.15	2.3	mA
			V_{IN} = 3.4V[4]	—	0.65	3.3	

NOTES:

1. For conditions shown as max. or min., use appropriate value specified under Electrical Characteristics.
2. Typical values are at V_{CC} = 5.0V, +25°C ambient and maximum loading.
3. Not more than one output should be shorted at one time. Duration of the short circuit test should not exceed one second.
4. Per TTL driven input (V_{IN} = 3.4V); all other inputs at V_{CC} or GND.
5. $I_{CC} = I_{CCQC} + (I_{CCQT} \times N_T) + (I_{CCD} \times f \times N) + (I_{CCQT} \times D \times N_D)$; N = Total number of inputs toggling; f = Frequency in MHz; D = Percent high duty cycle; N_T = Number of TTL statically driven inputs (V_{IN} = 3.4V); N_D = Number of TTL dynamically driven inputs (V_{IN} = 3.4V)

MILITARY AND COMMERCIAL TEMPERATURE RANGES **OCTOBER 1985**

©1985 Integrated Device Technology, Inc. Printed in U.S.A.

Integrated Device Technology, Inc.

CMOS PARALLEL FIRST-IN/FIRST-OUT FIFO 512 x 9 BIT & 1024 x 9 BIT

IDT7201S/L
IDT7202S/L

FEATURES:

- First-In, First-Out dual port memory
- 512x9 organization (IDT7201)
- 1024x9 organization (IDT7202)
- Low power consumption
  - —IDT7201/7202S Commercial:
    Active: 440mW
    Power Down: 16.5mW (Max.)
  - —IDT7201/7202S Military:
    Active: 550mW
    Power Down: 27.5mW (Max.)
  - —IDT7201/7202L Commercial:
    Active: 440mW (Max.)
    Power Down: 2.7mW (Max.)
  - —IDT7201/7202L Military:
    Active: 550mW (Max.)
    Power Down: 5mW (Max.)
- Asynchronous and simultaneous read and write
- Fully expandable by both word depth and/or bit width
- IDT7201 pin and functionally compatible with Mostek MK4501
- IDT7202 allows for deep word structure (1024) without expansion
- Half full flag capability in single device mode
- Master/slave multiprocessing applications
- Bidirectional and rate buffer applications
- Empty and full warning flags
- Auto retransmit capability
- High-performance CEMOS™ II technology
- Available in DIP and LCC
- Military product available 100% screened to MIL-STD-883, Class B

PIN CONFIGURATIONS

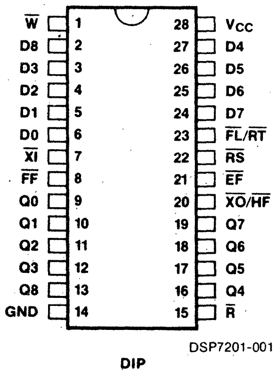

$\overline{W}$ 1
D8 2
D3 3
D2 4
D1 5
D0 6
$\overline{XI}$ 7
$\overline{FF}$ 8
Q0 9
Q1 10
Q2 11
Q3 12
Q8 13
GND 14
28 Vcc
27 D4
26 D5
25 D6
24 D7
23 $\overline{FL}/\overline{RT}$
22 $\overline{RS}$
21 $\overline{EF}$
20 $\overline{XO}/\overline{HF}$
19 Q7
18 Q6
17 Q5
16 Q4
15 $\overline{R}$

DSP7201-001

DIP
TOP VIEW

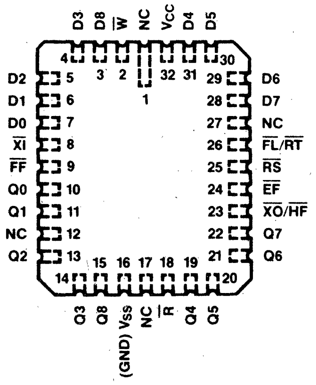

D3 D8 $\overline{W}$ NC Vcc D4 D5
4 3 2 1 32 31 30
D2 5
D1 6
D0 7
$\overline{XI}$ 8
$\overline{FF}$ 9
Q0 10
Q1 11
NC 12
Q2 13
29 D6
28 D7
27 NC
26 $\overline{FL}/\overline{RT}$
25 $\overline{RS}$
24 $\overline{EF}$
23 $\overline{XO}/\overline{HF}$
22 Q7
21 Q6
14 15 16 17 18 19 20
Q3 Q8 Vss (GND) NC $\overline{R}$ Q4 Q5

DSP7201-002

LCC
TOP VIEW

DESCRIPTION:

The IDT7201/7202 is a dual port memory that utilizes a special First-In, First-Out algorithm that loads and empties data on a first-in, first-out basis. The device uses full and empty flags to prevent data overflow and underflow and expansion logic to allow for unlimited expansion capability in both word size and depth.

The reads and writes are internally sequential through the use of ring pointers, with no address information required to load and unload data. Data is toggled in and out of the device through the use of the WRITE ($\overline{W}$) and READ ($\overline{R}$) pins. The device has a read/write cycle time of 65ns (15MHz).

The device utilizes a 9-bit wide data array to allow for control and parity bits at the user's option. This feature is especially useful in data communications applications where it is necessary to use a parity bit for transmission/reception error checking. It also features a RETRANSMIT ($\overline{RT}$) capability that allows for reset of the read pointer to its initial position when $\overline{RT}$ is pulsed low to allow for retransmission from the beginning of data. A half full flag is available in the single device mode and width expansion modes.

The IDT7201/7202 is fabricated using the high speed CEMOS™ II, 2 micron technology and is available in DIP and LCC screened to MIL-STD-883, Method 5004. It is designed for those applications requiring asynchronous and simultaneous read/writes in multiprocessing and rate buffer applications. The 1024x9 organization of the IDT7202 allows a 1024 deep word structure without the need for expansion.

FUNCTIONAL BLOCK DIAGRAM

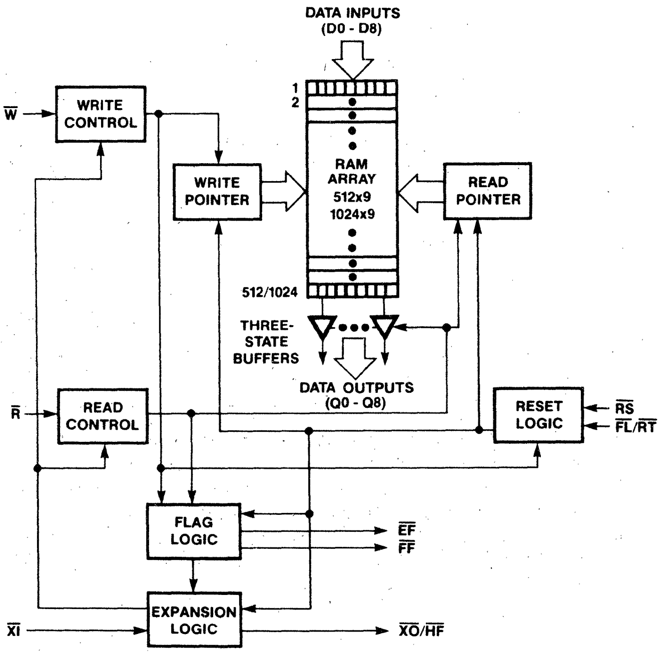

DATA INPUTS
(D0 - D8)
$\overline{W}$
WRITE CONTROL
1
2
WRITE POINTER
RAM ARRAY
512x9
1024x9
READ POINTER
512/1024
THREE-STATE BUFFERS
DATA OUTPUTS
(Q0 - Q8)
$\overline{R}$
READ CONTROL
RESET LOGIC
$\overline{RS}$
$\overline{FL}/\overline{RT}$
FLAG LOGIC
$\overline{EF}$
$\overline{FF}$
$\overline{XI}$
EXPANSION LOGIC
$\overline{XO}/\overline{HF}$

DSP7201-003

CEMOS is a trademark of Integrated Device Technology, Inc.

MILITARY AND COMMERCIAL TEMPERATURE RANGES **MAY 1985**

©1985 Integrated Device Technology, Inc.

Printed in U.S.A.

Integrated Device Technology, Inc.

CMOS PARALLEL IN-OUT FIFO MODULE 2K x 9-BIT & 4K x 9-BIT

IDT7M203
IDT7M204

FEATURES:

- First-In, First-Out memory module
- 2Kx9 organization (IDT7M203)
- 4Kx9 organization (IDT7M204)
- Low power consumption
- Asynchronous and simultaneous read and write
- Fully expandable by both word depth and/or bit width
- Assembled with IDT's high-reliability vapor phase solder reflow process
- Single 5V (±10%) power supply
- Master/slave multiprocessing applications
- Bidirectional and rate buffer applications
- Empty and full warning flags
- High-performance CEMOS™II technology
- Pin compatible with Mostek MK4501 and IDT7201, but with four times word depth (IDT7M203) or eight times (IDT7M204)
- Module available with semiconductor components 100% screened to MIL-STD-883, Class B

PIN CONFIGURATION

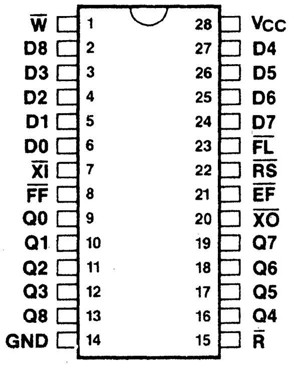
$\overline{W}$ 1
D8 2
D3 3
D2 4
D1 5
D0 6
$\overline{XI}$ 7
$\overline{FF}$ 8
Q0 9
Q1 10
Q2 11
Q3 12
Q8 13
GND 14
28 Vcc
27 D4
26 D5
25 D6
24 D7
23 $\overline{FL}$
22 $\overline{RS}$
21 $\overline{EF}$
20 $\overline{XO}$
19 Q7
18 Q6
17 Q5
16 Q4
15 $\overline{R}$

SSD7M203-001

DIP
TOP VIEW

PIN NAMES

$\overline{W}$ = WRITE	$\overline{FL}$ = FIRST LOAD	$\overline{XI}$ = EXPANSION IN	$\overline{EF}$ = EMPTY FLAG
$\overline{R}$ = READ	D = DATA IN	$\overline{XO}$ = EXPANSION OUT	V_{CC} = 5V
$\overline{RS}$ = RESET	Q = DATA OUT	$\overline{FF}$ = FULL FLAG	GND = GROUND

DESCRIPTION:

The IDT7M203/204 are FIFO memory modules that utilize a special First-In, First-Out algorithm that loads and empties data on a first-in, first-out basis. The device uses full and empty flags to prevent data overflow and underflow and expansion logic to allow for unlimited expansion capability in both word size and depth.

The reads and writes are internally sequential through the use of ring pointers, with no address information required to load and unload data. Data is toggled in and out of the device through the use of the WRITE ($\overline{W}$) and READ ($\overline{R}$) pins. The device has a read/write cycle time of 85ns (12MHz).

The device utilizes a 9-bit wide data array to allow for control and parity bits at the user's option. This feature is especially useful in data communications applications where it is necessary to use a parity bit for transmission/reception error checking.

The IDT7M203/204 are constructed on a multi-layered ceramic substrate using four IDT7201 (512x9) or four IDT7202 (1Kx9) FIFOs in leadless chip carriers. Extremely high speeds are achieved in this fashion due to the use of IDT7201s and IDT7202s fabricated in IDT's high-performance 2 micron technology, CEMOS II.

IDT's military FIFO modules have semiconductor components 100% processed to the test methods of MIL-STD-883, Class B, making them ideally suited to applications demanding the highest level of performance and reliability.

FUNCTIONAL BLOCK DIAGRAM

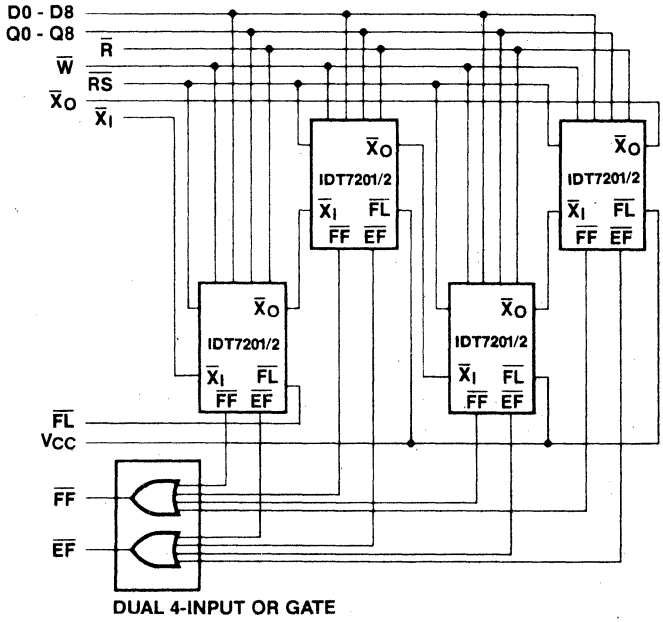
D0 - D8
Q0 - Q8
$\overline{R}$
$\overline{W}$
$\overline{RS}$
$\overline{X}_O$
$\overline{X}_I$
$\overline{X}_O$
IDT7201/2
$\overline{X}_I$ $\overline{FL}$
$\overline{FF}$ $\overline{EF}$
$\overline{FL}$
V_{CC}
$\overline{FF}$
$\overline{EF}$
DUAL 4-INPUT OR GATE

SSD7M203-002

CEMOS is a trademark of Integrated Device Technology, Incorporated.

MILITARY AND COMMERCIAL TEMPERATURE RANGES **OCTOBER 1985**

©1985 Integrated Device Technology, Incorporated.

Printed in the U.S.A.

Integrated Device Technology, Inc.

16 x 16 PARALLEL CMOS MULTIPLIER-ACCUMULATOR

PRELIMINARY
IDT7210
IDT7243

FEATURES:

- 16 x 16 parallel multiplier/accumulator with selectable accumulation and subtraction
- High-speed - 65ns multiply/accumulate time
- IDT7210 features selectable accumulation, subtraction, rounding and preloading with 35-bit result
- IDT7243 features selectable accumulation, subtraction and rounding with 19-bit result
- IDT7210 is pin and functionally compatible with the TRW TDC1010J
- IDT7243 is pin and functionally compatible with the TRW TDC1043
- Both devices perform subtraction and double precision addition and multiplication
- Produced using advanced sub-2 micron CEMOS™II high-performance technology
- Low power consumption (less than 250mW typical) - less than 1/15 the power of compatible bipolar and 1/7 the power of NMOS designs
- Inputs and outputs directly TTL-compatible
- Single 5V supply
- Available in DIP or LCC
- Military product 100% screened to MIL-STD-883, Class B

DESCRIPTION:

The IDT7210/7243 are high-speed, low-power 16 x 16 bit parallel multiplier/accumulators that are ideally suited for real-time digital signal processing applications. Fabricated using sub-2 micron CEMOS II silicon gate technology, these devices offer a very low power alternative to existing bipolar and NMOS counterparts with only 1/7 to 1/15 the power dissipation and exceptional speed (65ns maximum) performance.

Pin and functional replacements for TRW's TDC1010J/TDC-1043, the IDT7210/7243 operate from a single 5 volt supply and are compatible with standard TTL logic levels. The architecture of the IDT7210/7243 is fairly straightforward, featuring individual input and output registers with clocked D-type flip-flops, a pre-load capability (IDT7210 only) which enables input data to be preloaded into the output registers, individual three-state output ports for the extended product (XTP) and most significant product (MSP), and a least significant product output (LSP) which is multiplexed with the Y input. Unlike the IDT7210 the IDT7243 does not have either a preload capability or a Least Significant Product (LSP) Output.

FUNCTIONAL BLOCK DIAGRAMS

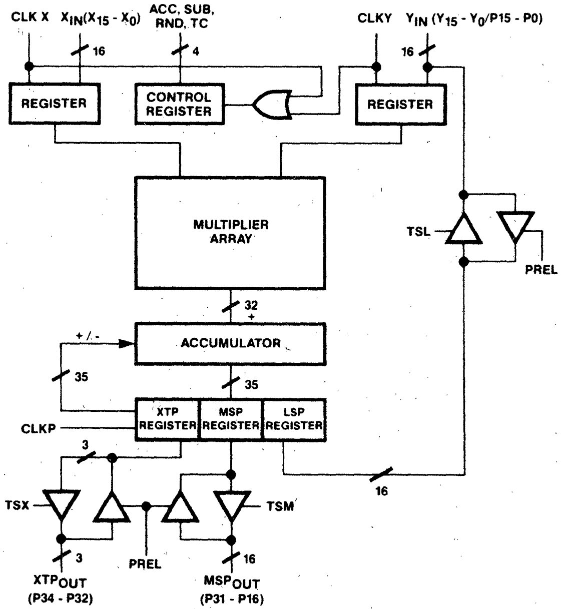
CLK X
$X_{IN}(X_{15} - X_0)$
ACC, SUB, RND, TC
CLKY
$Y_{IN}(Y_{15} - Y_0/P15 - P0)$
16
4
16
REGISTER
CONTROL REGISTER
REGISTER
MULTIPLIER ARRAY
TSL
PREL
32
+
+/-
ACCUMULATOR
35
35
CLKP
XTP REGISTER
MSP REGISTER
LSP REGISTER
3
16
TSX
TSM
3
PREL
16
XTP_{OUT} (P34 - P32)
MSP_{OUT} (P31 - P16)

DSP7210-001

IDT7210

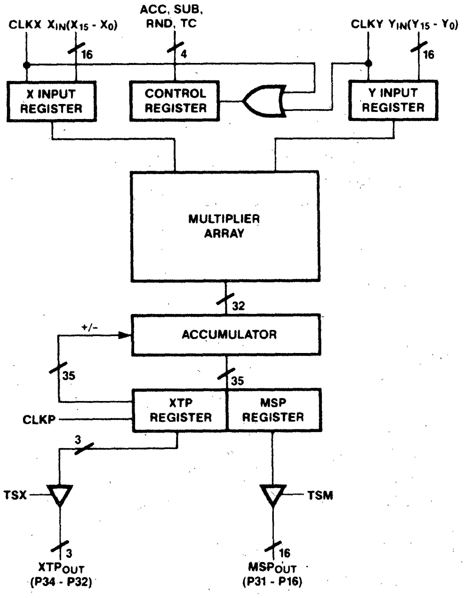
CLKX
$X_{IN}(X_{15} - X_0)$
ACC, SUB, RND, TC
CLKY
$Y_{IN}(Y_{15} - Y_0)$
16
4
16
X INPUT REGISTER
CONTROL REGISTER
Y INPUT REGISTER
MULTIPLIER ARRAY
32
+/-
ACCUMULATOR
35
35
CLKP
XTP REGISTER
MSP REGISTER
3
TSX
TSM
3
16
XTP_{OUT} (P34 - P32)
MSP_{OUT} (P31 - P16)

DSP7210-002

IDT7243

CEMOS is a trademark of Integrated Device Technology, Inc.

MILITARY AND COMMERCIAL TEMPERATURE RANGES **MAY 1985**

©1985 Integrated Device Technology, Inc. Printed in U.S.A.

Integrated Device Technology, Inc

12 x 12 PARALLEL CMOS MULTIPLIER-ACCUMULATOR

PRELIMINARY
IDT7209

FEATURES:

- 12x12 parallel multiplier/accumulator with selectable accumulation and subtraction
- High-speed - 55ns maximum multiply/accumulate time
- Selectable accumulation, subtraction, rounding and preloading with 27-bit result
- Pin and functionally compatible with the TRW TDC1009J
- Performs subtraction and double precision addition and multiplication
- Produced using advanced sub-2 micron CEMOS™ II high-performance technology
- Low power consumption (less than 250mW typical) - less than 1/15 the power of compatible bipolar and 1/7 the power of NMOS designs
- Inputs and outputs directly TTL-compatible
- Single 5V supply
- Available in DIP or LCC
- Military product 100% screened to MIL-STD-883, Class B

FUNCTIONAL BLOCK DIAGRAM

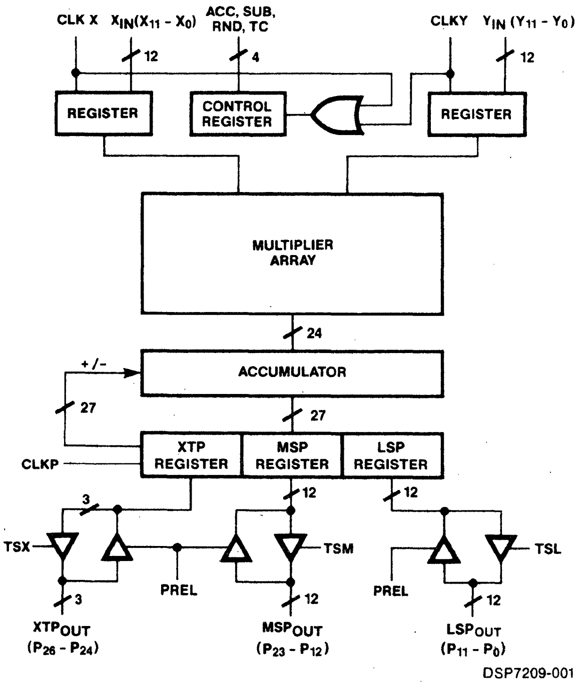

IDT7209

DESCRIPTION:

The IDT7209 is a high-speed, low-power 12x12 bit parallel multiplier/accumulator that is ideally suited for real-time digital signal processing applications. Fabricated using sub-2 micron CEMOS II silicon gate technology, this device offers a very low power alternative to existing bipolar and NMOS counterparts with only 1/7 to 1/15 the power dissipation and exceptional speed (55ns maximum) performance.

A pin and functional replacement for TRW's TDC1009J, the IDT7209 operates from a single 5 volt supply and is compatible with standard TTL logic levels. The architecture of the IDT7209 is fairly straightforward, featuring individual input and output registers with clocked D-type flip-flops, a preload capability which enables input data to be preloaded into the output registers, individual three-state output ports for the extended product (XTP) and most significant product (MSP), and a least significant product (LSP) output.

The X_{IN} and Y_{IN} data input registers may be specified through the use of the two's complement input (TC) as either two's complement or an unsigned magnitude, yielding a full-precision 24-bit result that may be accumulated to a full 27-bit result. The three output registers—extended product (XTP), most significant product (MSP) and least significant product (LSP)—are controlled by the respective TSX, TSM and TSL input lines.

The accumulate input (ACC) enables the device to perform either a multiply or a multiply-accumulate function. In the multiply-accumulate mode, output data can be added to or subtracted from subsequent results. When the subtraction (SUB) input is active simultaneously with an active ACC, a subtraction can be performed. The double precision accumulated result is rounded down to either a single precision or single precision plus 3-bit extended result. In the multiply mode, the extended product output (XTP) is sign extended in the two's complement mode or set to zero in the unsigned mode. The ROUND (RND) control rounds up the most significant product (MSP) and the 3-bit extended product (XTP) outputs. When preload input (PREL) is active, all the output buffers are forced into a high-impedance state (see PRELOAD truth table) and external data can be loaded into the output register by using the TSX, TSL and TSM signals as input controls.

CEMOS is a trademark of Integrated Device Technology, Inc.

© 1985 Integrated Device Technology, Inc.

Integrated Device Technology, Inc.

16x16 BIT PARALLEL CMOS MULTIPLIER

IDT7216L
IDT7217L

FEATURES:

- 16x16 parallel multiplier with double precision product
- High-speed 55ns maximum clock to multiply time
- Low power consumption - 200mW typical, less than 1/10th the power of compatible bipolar parts
- Produced with advanced CEMOS™ I high-performance technology
- IDT7216L is pin and functionally compatible with TRW MPY016H/K and AMD AM29516
- IDT7217L requires only single clock with register enables making it pin and functionally compatible with AMD AM29517
- Configured for easy array expansion
- User-controlled option for transparent output register mode
- Round control for rounding the MSP
- Single 5V power supply
- Input and output directly TTL-compatible
- Three-state output
- Available in DIP, LCC or Flatpack
- Military product available 100% screened to Class B

DESCRIPTION:

The IDT7216/IDT7217 are high-speed, low-power 16x16 multipliers, ideal for fast, real time digital signal processing applications. Utilization of a modified Booths algorithm and IDT's high-performance, high-reliability technology, CEMOS I, has achieved speeds comparable to bipolar (55ns max.) at 1/10th the power consumption.

The IDT7216/IDT7217 are ideal for applications requiring high-speed multiplications such as fast Fourier transform analysis, digital filtering, graphic display systems, speech synthesis and recognition, and in any system requirement where multiplication speeds of a mini/micro computer are inadequate.

All input registers, as well as LSP and MSP output registers, use the same positive edge triggered D-type flip-flop. In the IDT7216, there are independent clocks (CLKX, CLKY, CLKM, CLKL) associated with each of these registers. The IDT7217 has only a single clock input (CLK) and three register enables. $\overline{\text{ENX}}$ and $\overline{\text{ENY}}$ control the two input registers, while $\overline{\text{ENP}}$ controls the entire product.

The IDT7216/IDT7217 offer additional flexibility with the FA control and $\overline{\text{MSPSEL}}$ functions. The FA control formats the output for 2's complement by shifting the MSP up one bit and then repeating the sign bit in the MSB of the LSP. The $\overline{\text{MSPSEL}}$ low selects the MSP to be available at the product output port, while a high selects the LSP to be available. Keeping this pin low will ensure compatibility with the TRW MPY016H/K.

The IDT7216/IDT7217 Multipliers are 100% processed in compliance to the test methods of MIL-STD-883, Method 5004, making them ideally suited to applications demanding the highest level of performance and reliability.

FUNCTIONAL BLOCK DIAGRAMS

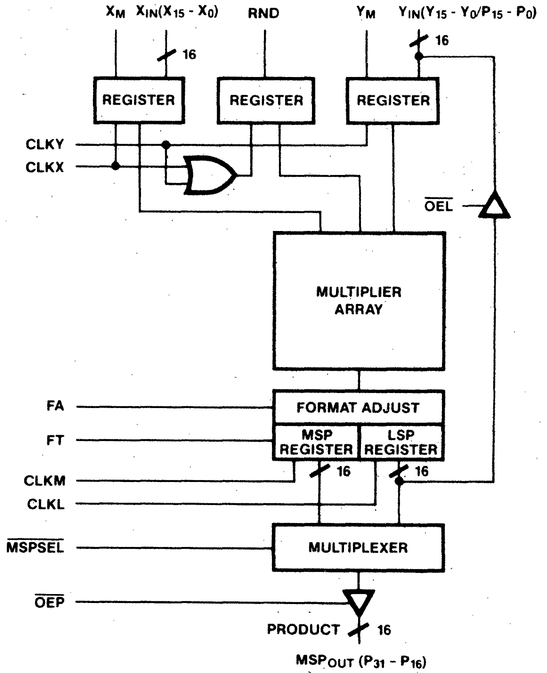
X_M
$X_{IN}(X_{15} - X_0)$
RND
Y_M
$Y_{IN}(Y_{15} - Y_0/P_{15} - P_0)$
16
16
REGISTER
REGISTER
REGISTER
CLKY
CLKX
$\overline{\text{OEL}}$
MULTIPLIER ARRAY
FA
FT
FORMAT ADJUST
MSP REGISTER
LSP REGISTER
16
16
CLKM
CLKL
$\overline{\text{MSPSEL}}$
MULTIPLEXER
$\overline{\text{OEP}}$
PRODUCT
16
$MSP_{OUT} (P_{31} - P_{16})$

IDT7216 DSP7216-001

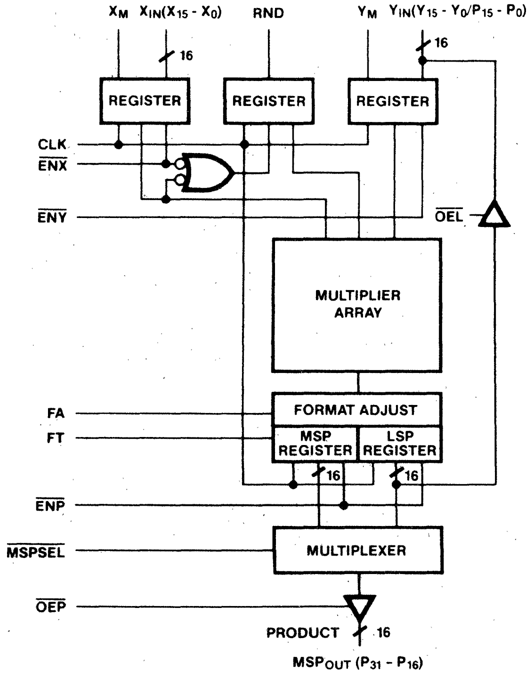
X_M
$X_{IN}(X_{15} - X_0)$
RND
Y_M
$Y_{IN}(Y_{15} - Y_0/P_{15} - P_0)$
16
16
REGISTER
REGISTER
REGISTER
CLK
$\overline{\text{ENX}}$
$\overline{\text{ENY}}$
$\overline{\text{OEL}}$
MULTIPLIER ARRAY
FA
FT
FORMAT ADJUST
MSP REGISTER
LSP REGISTER
16
16
$\overline{\text{ENP}}$
$\overline{\text{MSPSEL}}$
MULTIPLEXER
$\overline{\text{OEP}}$
PRODUCT
16
$MSP_{OUT} (P_{31} - P_{16})$

IDT7217 DSP7216-002

CEMOS is a trademark of Integrated Device Technology, Inc.

MILITARY AND COMMERCIAL TEMPERATURE RANGES **APRIL 1985**

©1985 Integrated Device Technology, Inc. Printed in U.S.A.

Integrated Device Technology, Inc.

12 x 12 BIT PARALLEL CMOS MULTIPLIER

PRELIMINARY
IDT7212
IDT7213

FEATURES:

- 12x12 parallel multiplier with double precision product
- High-speed - 45ns maximum clock to multiply time
- Low power consumption - 250mW typical, less than 1/10th the power of compatible bipolar parts
- Produced with advanced sub-2 micron CEMOS™ II dual-layer metal high-performance technology
- IDT7212L is pin and functionally compatible with TRW MPY012H
- IDT7213L requires only a single clock with register enables
- Configured for easy array expansion
- User-controlled option for transparent output register mode
- Round control for rounding the MSP
- Single 5V power supply
- Input and output directly TTL-compatible
- Three-state output
- Available in DIP, LCC or Flatpack
- Military product available 100% screened to MIL-STD-883, Class B

DESCRIPTION:

The IDT7212/IDT7213 are high-speed, low power 12x12 multipliers ideal for fast, real-time digital signal processing applications. Utilization of a modified Booths algorithm and IDT's high-performance, high-reliability technology, CEMOS II, has achieved speeds exceeding bipolar (45ns max.) at 1/10th the power consumption.

The IDT7212/IDT7213 are ideal for applications requiring high-speed multiplications such as fast Fourier transform analysis, digital filtering, graphic display systems, speech synthesis and recognition, and in any system requirement where multiplication speeds of a mini/micro computer are inadequate.

All input registers, as well as LSP and MSP output registers, use the same positive edge triggered D-type flip-flop. With the IDT7212, there are independent clocks (CLKX, CLKY, CLKM, CLKL) associated with each of these registers. The IDT7213 has only a single clock input (CLK) and three register enables. $\overline{\text{ENX}}$ and $\overline{\text{ENY}}$ control the two input registers, while $\overline{\text{ENP}}$ controls the entire product.

The IDT7212/IDT7213 offer additional flexibility with the FA control. The FA control formats the output for 2's complement by shifting the MSP up one bit and then repeating the sign bit in the MSB of the LSP.

The IDT7212/IDT7213 Multipliers are 100% processed in compliance to the test methods of MIL-STD-883, Method 5004, making them ideally suited to applications demanding the highest level of performance and reliability.

FUNCTIONAL BLOCK DIAGRAMS

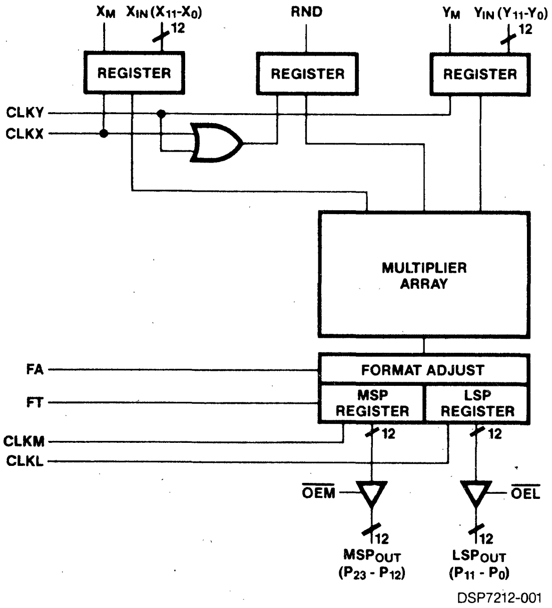

X_M $X_{IN}(X_{11}-X_0)$
12
RND
Y_M $Y_{IN}(Y_{11}-Y_0)$
12
REGISTER
REGISTER
REGISTER
CLKY
CLKX
MULTIPLIER ARRAY
FA
FT
FORMAT ADJUST
MSP REGISTER
LSP REGISTER
CLKM
CLKL
12
12
$\overline{\text{OEM}}$
$\overline{\text{OEL}}$
12
12
MSP_{OUT} $(P_{23}-P_{12})$
LSP_{OUT} $(P_{11}-P_0)$

DSP7212-001

IDT7212

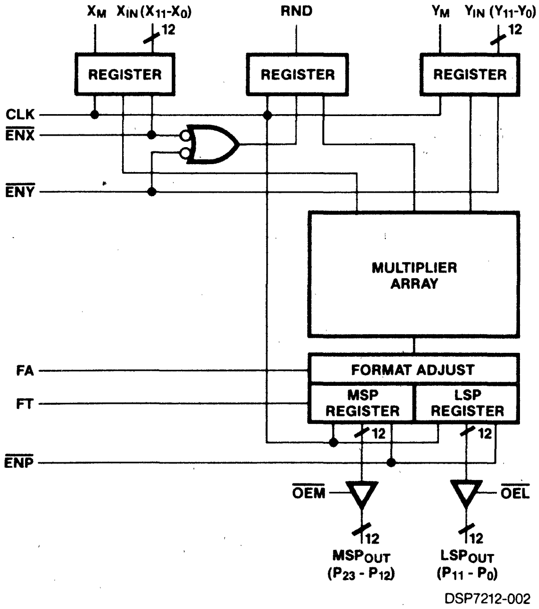

X_M $X_{IN}(X_{11}-X_0)$
12
RND
Y_M $Y_{IN}(Y_{11}-Y_0)$
12
REGISTER
REGISTER
REGISTER
CLK
$\overline{\text{ENX}}$
$\overline{\text{ENY}}$
MULTIPLIER ARRAY
FA
FT
FORMAT ADJUST
MSP REGISTER
LSP REGISTER
$\overline{\text{ENP}}$
12
12
$\overline{\text{OEM}}$
$\overline{\text{OEL}}$
12
12
MSP_{OUT} $(P_{23}-P_{12})$
LSP_{OUT} $(P_{11}-P_0)$

DSP7212-002

IDT7213

CEMOS is a trademark of Integrated Device Technology, Inc.

MILITARY AND COMMERCIAL TEMPERATURE RANGES **APRIL 1985**

©1985 Integrated Device Technology, Inc.

Printed in U.S.A.

PIN CONFIGURATIONS (64-PIN DIP)

IDT7209
MULTIPLIER-ACCUMULATOR

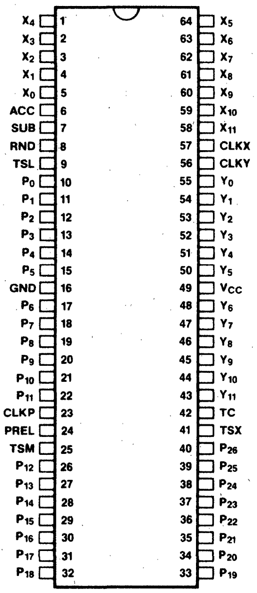
X_4 1 64 X_5
X_3 2 63 X_6
X_2 3 62 X_7
X_1 4 61 X_8
X_0 5 60 X_9
ACC 6 59 X_{10}
SUB 7 58 X_{11}
RND 8 57 CLKX
TSL 9 56 CLKY
P_0 10 55 Y_0
P_1 11 54 Y_1
P_2 12 53 Y_2
P_3 13 52 Y_3
P_4 14 51 Y_4
P_5 15 50 Y_5
GND 16 49 V_{CC}
P_6 17 48 Y_6
P_7 18 47 Y_7
P_8 19 46 Y_8
P_9 20 45 Y_9
P_{10} 21 44 Y_{10}
P_{11} 22 43 Y_{11}
CLKP 23 42 TC
PREL 24 41 TSX
TSM 25 40 P_{26}
P_{12} 26 39 P_{25}
P_{13} 27 38 P_{24}
P_{14} 28 37 P_{23}
P_{15} 29 36 P_{22}
P_{16} 30 35 P_{21}
P_{17} 31 34 P_{20}
P_{18} 32 33 P_{19}

DSP7209-002

IDT7210
MULTIPLIER-ACCUMULATOR

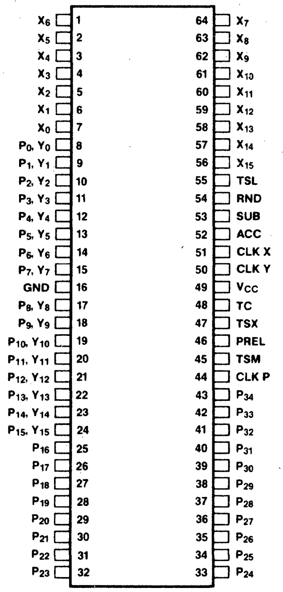
X_6 1 64 X_7
X_5 2 63 X_8
X_4 3 62 X_9
X_3 4 61 X_{10}
X_2 5 60 X_{11}
X_1 6 59 X_{12}
X_0 7 58 X_{13}
P_0, Y_0 8 57 X_{14}
P_1, Y_1 9 56 X_{15}
P_2, Y_2 10 55 TSL
P_3, Y_3 11 54 RND
P_4, Y_4 12 53 SUB
P_5, Y_5 13 52 ACC
P_6, Y_6 14 51 CLK X
P_7, Y_7 15 50 CLK Y
GND 16 49 V_{CC}
P_8, Y_8 17 48 TC
P_9, Y_9 18 47 TSX
P_{10}, Y_{10} 19 46 PREL
P_{11}, Y_{11} 20 45 TSM
P_{12}, Y_{12} 21 44 CLK P
P_{13}, Y_{13} 22 43 P_{34}
P_{14}, Y_{14} 23 42 P_{33}
P_{15}, Y_{15} 24 41 P_{32}
P_{16} 25 40 P_{31}
P_{17} 26 39 P_{30}
P_{18} 27 38 P_{29}
P_{19} 28 37 P_{28}
P_{20} 29 36 P_{27}
P_{21} 30 35 P_{26}
P_{22} 31 34 P_{25}
P_{23} 32 33 P_{24}

DSP7210-003

IDT7243
MULTIPLIER-ACCUMULATOR

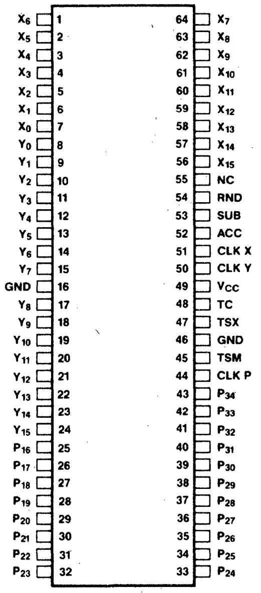
X_6 1 64 X_7
X_5 2 63 X_8
X_4 3 62 X_9
X_3 4 61 X_{10}
X_2 5 60 X_{11}
X_1 6 59 X_{12}
X_0 7 58 X_{13}
Y_0 8 57 X_{14}
Y_1 9 56 X_{15}
Y_2 10 55 NC
Y_3 11 54 RND
Y_4 12 53 SUB
Y_5 13 52 ACC
Y_6 14 51 CLK X
Y_7 15 50 CLK Y
GND 16 49 V_{CC}
Y_8 17 48 TC
Y_9 18 47 TSX
Y_{10} 19 46 GND
Y_{11} 20 45 TSM
Y_{12} 21 44 CLK P
Y_{13} 22 43 P_{34}
Y_{14} 23 42 P_{33}
Y_{15} 24 41 P_{32}
P_{16} 25 40 P_{31}
P_{17} 26 39 P_{30}
P_{18} 27 38 P_{29}
P_{19} 28 37 P_{28}
P_{20} 29 36 P_{27}
P_{21} 30 35 P_{26}
P_{22} 31 34 P_{25}
P_{23} 32 33 P_{24}

DSP7210-004

IDT7212
MULTIPLIER

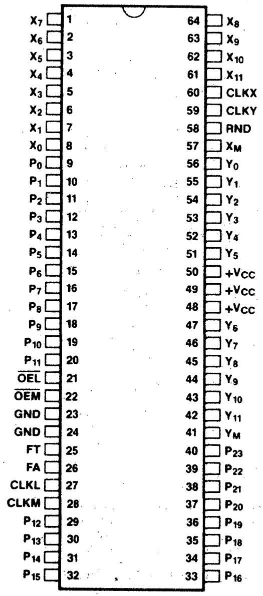
X_7 1 64 X_8
X_6 2 63 X_9
X_5 3 62 X_{10}
X_4 4 61 X_{11}
X_3 5 60 CLKX
X_2 6 59 CLKY
X_1 7 58 RND
X_0 8 57 X_M
P_0 9 56 Y_0
P_1 10 55 Y_1
P_2 11 54 Y_2
P_3 12 53 Y_3
P_4 13 52 Y_4
P_5 14 51 Y_5
P_6 15 50 $+V_{CC}$
P_7 16 49 $+V_{CC}$
P_8 17 48 $+V_{CC}$
P_9 18 47 Y_6
P_{10} 19 46 Y_7
P_{11} 20 45 Y_8
$\overline{OEL}$ 21 44 Y_9
$\overline{OEM}$ 22 43 Y_{10}
GND 23 42 Y_{11}
GND 24 41 Y_M
FT 25 40 P_{23}
FA 26 39 P_{22}
CLKL 27 38 P_{21}
CLKM 28 37 P_{20}
P_{12} 29 36 P_{19}
P_{13} 30 35 P_{18}
P_{14} 31 34 P_{17}
P_{15} 32 33 P_{16}

DSP7212-003

IDT7213
MULTIPLIER

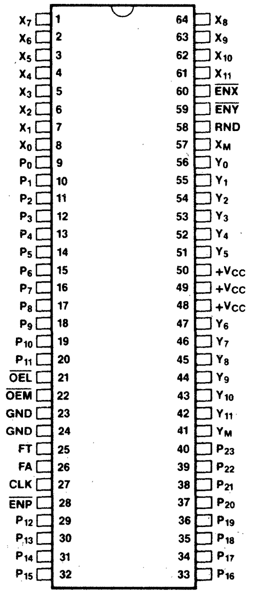
X_7 1 64 X_8
X_6 2 63 X_9
X_5 3 62 X_{10}
X_4 4 61 X_{11}
X_3 5 60 $\overline{ENX}$
X_2 6 59 $\overline{ENY}$
X_1 7 58 RND
X_0 8 57 X_M
P_0 9 56 Y_0
P_1 10 55 Y_1
P_2 11 54 Y_2
P_3 12 53 Y_3
P_4 13 52 Y_4
P_5 14 51 Y_5
P_6 15 50 $+V_{CC}$
P_7 16 49 $+V_{CC}$
P_8 17 48 $+V_{CC}$
P_9 18 47 Y_6
P_{10} 19 46 Y_7
P_{11} 20 45 Y_8
$\overline{OEL}$ 21 44 Y_9
$\overline{OEM}$ 22 43 Y_{10}
GND 23 42 Y_{11}
GND 24 41 Y_M
FT 25 40 P_{23}
FA 26 39 P_{22}
CLK 27 38 P_{21}
$\overline{ENP}$ 28 37 P_{20}
P_{12} 29 36 P_{19}
P_{13} 30 35 P_{18}
P_{14} 31 34 P_{17}
P_{15} 32 33 P_{16}

DSP7212-004

IDT7216
MULTIPLIER

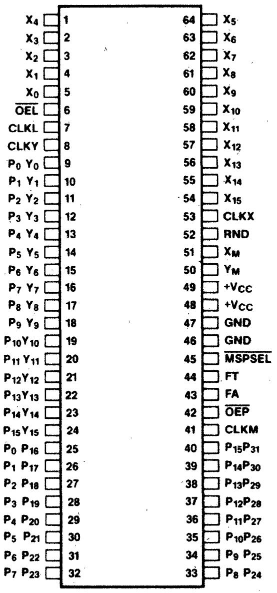
X_4 1 64 X_5
X_3 2 63 X_6
X_2 3 62 X_7
X_1 4 61 X_8
X_0 5 60 X_9
$\overline{OEL}$ 6 59 X_{10}
CLKL 7 58 X_{11}
CLKY 8 57 X_{12}
P_0 Y_0 9 56 X_{13}
P_1 Y_1 10 55 X_{14}
P_2 Y_2 11 54 X_{15}
P_3 Y_3 12 53 CLKX
P_4 Y_4 13 52 RND
P_5 Y_5 14 51 X_M
P_6 Y_6 15 50 Y_M
P_7 Y_7 16 49 $+V_{CC}$
P_8 Y_8 17 48 $+V_{CC}$
P_9 Y_9 18 47 GND
$P_{10}Y_{10}$ 19 46 GND
$P_{11}Y_{11}$ 20 45 $\overline{MSPSEL}$
$P_{12}Y_{12}$ 21 44 FT
$P_{13}Y_{13}$ 22 43 FA
$P_{14}Y_{14}$ 23 42 $\overline{OEP}$
$P_{15}Y_{15}$ 24 41 CLKM
P_0 P_{16} 25 40 $P_{15}P_{31}$
P_1 P_{17} 26 39 $P_{14}P_{30}$
P_2 P_{18} 27 38 $P_{13}P_{29}$
P_3 P_{19} 28 37 $P_{12}P_{28}$
P_4 P_{20} 29 36 $P_{11}P_{27}$
P_5 P_{21} 30 35 $P_{10}P_{26}$
P_6 P_{22} 31 34 P_9 P_{25}
P_7 P_{23} 32 33 P_8 P_{24}

DSP7216-003

IDT7217
MULTIPLIER

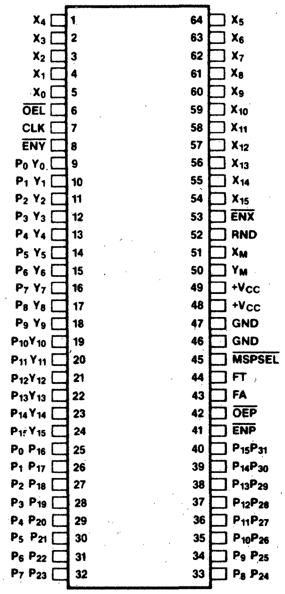
X_4 1 64 X_5
X_3 2 63 X_6
X_2 3 62 X_7
X_1 4 61 X_8
X_0 5 60 X_9
$\overline{OEL}$ 6 59 X_{10}
CLK 7 58 X_{11}
$\overline{ENY}$ 8 57 X_{12}
P_0 Y_0 9 56 X_{13}
P_1 Y_1 10 55 X_{14}
P_2 Y_2 11 54 X_{15}
P_3 Y_3 12 53 $\overline{ENX}$
P_4 Y_4 13 52 RND
P_5 Y_5 14 51 X_M
P_6 Y_6 15 50 Y_M
P_7 Y_7 16 49 $+V_{CC}$
P_8 Y_8 17 48 $+V_{CC}$
P_9 Y_9 18 47 GND
$P_{10}Y_{10}$ 19 46 GND
$P_{11}Y_{11}$ 20 45 $\overline{MSPSEL}$
$P_{12}Y_{12}$ 21 44 FT
$P_{13}Y_{13}$ 22 43 FA
$P_{14}Y_{14}$ 23 42 $\overline{OEP}$
$P_{15}Y_{15}$ 24 41 $\overline{ENP}$
P_0 P_{16} 25 40 $P_{15}P_{31}$
P_1 P_{17} 26 39 $P_{14}P_{30}$
P_2 P_{18} 27 38 $P_{13}P_{29}$
P_3 P_{19} 28 37 $P_{12}P_{28}$
P_4 P_{20} 29 36 $P_{11}P_{27}$
P_5 P_{21} 30 35 $P_{10}P_{26}$
P_6 P_{22} 31 34 P_9 P_{25}
P_7 P_{23} 32 33 P_8 P_{24}

DSP7216-004

Timer/Counters With Display Drivers

NUMBER OF DIGITS	TYPE	DISPLAY					FUNCTIONS																MAX COUNT SPEED (MHz)	Evaluation Kit Available	TYPICAL APPLICATIONS AND COMMENTS
		LED			LCD	VF	UNIT COUNT				UNIVERSAL COUNTERS														
		Common Anode, Non-MUX	Common Cathode, MUX	Common Anode, MUX	Direct Drive, Non-MUX	Non-MUX	Up/Down	Up only	Decade	Modulo 60 (Hr/Min/Sec)	Frequency	Period	Frequency Ratio	Time Interval	MUX BCD Outputs	Display Latch	Display Blanking	Count Enable	Leading Zero Blanking	Preset Count	Comparison Register	Equal and Zero Output			
4 DIGIT	ICM7217			●			●		●		■				●	●	●		●	●	●	●	2		Industrial control: preset/predetermining counters, sequencers, on/off delay timers, batch counters. Presets and loads compare register from thumbwheel switches
	ICM7217A		●				●		●		■				●	●	●		●	●	●	●	2		
	ICM7217B			●			●			●					●	●	●		●	●	●	●	2		
	ICM7217C		●				●			●					●	●	●		●	●	●	●	2		
	ICM7227			●			●		●						●	●	●		●	●	●	●	2		Microprocessor compatible interface. Industrial control: preset/predetermining counters, sequencers, on/off delay timers, batch counters. Presets and loads compare register from a microprocessor
	ICM7227A		●				●		●						●	●	●		●	●	●	●	2		
	ICM7227B			●			●			●					●	●	●		●	●	●	●	2		
	ICM7227C		●				●			●					●	●	●		●	●	●	●	2		
4-½ DIGIT	ICM7224				●			●	●		■					●		●	●				15	●	10 μA operating current. Can be cascaded for more digits
	ICM7224A				●			●		●						●		●	●				15		
	ICM7225	●						●	●		■					●	●	●	●				15	●	Has brightness adjustment, 10 μA current with display blanked, cascadable
	ICM7225A	●						●		●						●	●	●	●				15		
	ICM7236					●		●	●		■					●	●	●	●				15	●	Up to 30 V output drive for Vacuum Fluorescent
	ICM7236A					●		●		●						●	●	●	●				15		
5-½ DIGIT	ICM7249				●			●	●					●					●						Event timer/counter, hour meter. 14 programmable modes. Selectable input filtering
6 DIGIT	ICM7215		●					●		●				●			●	●							4 functions: start/stop/reset, split, taylor, time out. 1/100's seconds and low battery
7 DIGIT	ICM7208		●					●	●		■					●	●	●	●				2.5		Use with ICM7207/A for a 7-digit frequency counter
8 DIGIT	ICM7216A			●				●	●		●	●	●	●		●	●		●				10		Universal frequency counter with display drivers. 4 internal gate times, auto decimal point, leading zero blanking, overflow indication. Display off, hold, and reset inputs.
	ICM7216B		●					●	●		●	●	●	●		●	●		●				10		
	ICM7216C			●				●	●		●					●	●		●				10		
	ICM7216D		●					●	●		●					●	●		●				10		
	ICM7226A			●				●	●		●	●	●	●	●	●	●	●	●				10	●	Same as ICM7216 plus period and time interval averaging, BCD outputs, μP PIA compatible.
	ICM7226B		●					●	●		●	●	●	●	●	●	●	●	●				10		

■ These counters will measure frequency when used with the ICM7207 (0.01 and 0.1 second timebase) or the ICM7207A (0.1 and 1.0 second timebase)

Timers/Counters Without Display Drivers

TYPE	SPECIAL FEATURES	DESCRIPTION
ICM7555		Low power CMOS equivalent of industry standard 555 timer—only 80μA supply current. ICM7555 does not have the large supply current transients of the bipolar 555 and does not require the large bypassing capacitors needed by the 555. Low leakage threshold and trigger inputs allow use of higher impedance RC timing components for extra long time delays.
ICM7556		An ICM7556 is a dual ICM7555, a CMOS, low power equivalent of the Bipolar 556 Timer.
ICM7240	Binary 0-225	Programmable CMOS counter/timer. Uses on-board RC oscillator or an external clock. The count is programmed by wire-AND connection of the outputs. Excellent for ON/OFF delay timers, ÷ N counters, and long period delays.
ICM7250	BCD 0-99	
ICM7260	Time 0-59	
ICM7242	Fixed 128/255	RC oscillator + 8-bit counter, similar to ICM7240 but with fixed 256 count. Used for extremely long time delays. Cascadable.

Oscillator/Divider Selector Guide

TYPE	OUTPUT FREQUENCY	SUPPLY VOLTAGE (V)	TYPICAL CURRENT (μA)	PULSE WIDTH (ms)	CRYSTAL FREQUENCY	OTHER OUTPUTS/COMMENTS
ICM7213	1 Pulse/Min	2-4	100	125, 1000	4.19 MHz	1 Pulse/Sec, 2048, 1024, 34.133, 16 Hz
ICM7207A	0.5 Hz	4-5.5	260	1000, 0.391	5.24288 MHz	5 Hz, 1600 Hz (Note 1)
ICM7213	1 Hz	2-4	100	7.8	4.19 MHz	1 Pulse/Min, 2048, 1024, 34.133, 16 Hz
ICM7207A	5 Hz	4-5.5	260	100, 0.391	5.24288 MHz	0.5, 1600 Hz
ICM7207	5 Hz	4-5.5	260	100, 0.312	6.5536 MHz	50 Hz, 1280 Hz
ICM7213	16 Hz	2-4	100	Sq. Wave	4.19 MHz	1 Pulse/Min, 2048, 1024, 34.133, 1 Hz
ICM7207	50 Hz	4-5.5	260	20, 0.312	6.5536 MHz	5 Hz, 1280 Hz
ICM7213	1000 Hz	2-4	100	Sq. Wave	4.096 MHz	2000, 2000 Pulses/Min
ICM7213	1024 Hz	2-4	100	Sq. Wave	4.19 MHz	1 Pulse/Min, 2048, 34.133, 16, 1 Hz
ICM7207A	1280 Hz	4-5.5	260	Sq. Wave	5.24288 MHz	0.5, 5 Hz
ICM7207	1600 Hz	4-5.5	260	Sq. Wave	6.5536 Mhz	5, 50 Hz
ICM7213	2048 Hz	2-4	100	Sq. Wave	4.19 MHz	1 Pulse/Min, 1024, 34.133, 16, 1 Hz
ICM7209	250 kHz- 10 MHZ	4.5-5.5	11,000	Sq. Wave	1-10 MHz	(Note 2)

Notes:

1. Oscillator/controller for frequency counter.
2. Two buffered outputs—Crystal Frequency and ÷ 8 output. Drives up to 5 TTL loads.

8. DISPLAY DRIVER

TYPE	# OF CHARACTERS OR DIGITS						DISPLAY TYPE						FONT			INTERFACE					FEATURES AND COMMENTS
	# of 7-Segment Digits	# of Decimal Points or Annunciators	# of Alphanumeric 14 Segments + D.P.	# of Alphanumeric 16 Segments + D.P.	# of Alphanumeric 18 Segments	# of Dot Matrix	LED, Common Anode Non-MUX	LED, Common Cathode MUX	LED, Common Anode MUX	LCD, Direct Drive	LCD, # of Ways MUX'D	Vacuum Fluorescent	Hexadecimal (0-9, A-F)	Code B (0-9, H, E, L, P, -, and Blank)	ASCII	MUX BCD (BCD + Digit Select Strobes)	Random Access (Data + Address + WR)	Bit Parallel, Digit Serial	Bit Serial	Cycle Time (ns)	
ICM7211	4									●			●			●				1000	Drives Conventional LCD Displays. Includes RC Oscillator, Divider Chain, Latches, Interface and LCD Drivers. Evaluation Kit Available
ICM7211A	4									●				●		●				1000	
ICM7211M	4									●			●				●			200	
ICM7211AM	4									●				●			●			200	
ICM7212	4						●						●			●				1000	Drives Common Anode LED Displays. 28 Current Controlled Outputs. Includes Latches, Interface and Brightness Control. Evaluation Kit Available.
ICM7212A	4						●							●		●				1000	
ICM7212M	4						●						●				●			200	
ICM7212AM	4						●							●			●			200	
ICM7218A	8	8							●				●	●				●		550	3 Decode Formats Drives UP to 64 Independent LED's. Includes 8x8 Memory, Multiplexed LED Drivers, Decoders, Interface and control. Applications Include Bar Graphs.
ICM7218B	8	8						●					●	●				●		550	
ICM7218C	8	8							●				●	●			●			500	
ICM7218D	8	8						●					●	●			●			500	
ICM7218E	8	8							●				●	●			●			500	
ICM7231A	8	16									3		●				●			500	8 Digits, 16 Annunciators on COM 3, Hexadecimal
ICM7231B	8	16									3			●			●			500	8 Digits, 16 Annunciators on COM 3, Code B
ICM7231C	8	16									3			●			●			500	8 Digits, 16 Annunicators on COM 1 + 3, Code B
ICM7232A	10	20									3		●						●	350	10 Digits, 20 Annunciators on COM 3, Hexadecimal
ICM7232B	10	20									3			●					●	350	10 Digits, 20 Annunciators on COM 3, Code B
ICM7232C	10	20									3			●					●	350	10 Digits, 20 Annunciators on COM 1 + 3, Code B
ICM7233A					4						3				●		●			500	4 Alphanumeric Characters. Evaluation Kit Available
ICM7233B					4						3				●		●			500	4 Alphanumeric Characters. Full-Width Numbers
ICM7234A					5						3				●				●	350	5 Alphanumeric Characters. Half-Width Numbers
ICM7234B					5						3				●				●	350	5 Alphanumeric Characters. Full-Width Numbers
ICM7235	4											●	●			●				1000	Drives 30 Volt Vacuum Fluorescent Displays Directly. Includes Latch/Decoder μP Interface or 4-Bit Input. Hexadecimal or Code B Format Available.
ICM7235A	4											●		●		●				1000	
ICM7235M	4											●	●				●			200	
ICM7235AM	4											●		●			●			200	
ICM7243A				8				●							●		●			250	8 Alphanumeric Characters + Decimal Pt. can be Daisy Chained or Cascaded. Evaluation Kit Available.
ICM7243B			8					●							●		●			250	
ICM7280		14				80					7& 10				●		●			400	1x80 Ch. Dot Matrix LCD Controller and Row Driver. Use with ICM7281.
ICM7283		14				80					16				●		●			400	2x40 Ch. Dot Matrix LCD Controller and Row Driver. Use with ICM7281.
ICM7281						—					—										Column Driver for use with ICM7280 or ICM7283.

* New Product

LATTICE

L1010

HIGH SPEED 16 × 16-BIT CMOS MULTIPLIER/ACCUMULATOR

FEATURES

- 16 × 16 MULTIPLIER/ACCUMULATOR WITH DOUBLE PRECISION PRODUCT
- HIGH SPEED MULTIPLY — ACCUMULATE
  - — 45 ns Max Clocked Multiply Time
- LOW POWER CMOS TECHNOLOGY
  - — 550 mW Max (active)
  - — 550 μW Max (CMOS Standby)
- SIMPLE INTERFACE
  - — Single 5V ± 10% Supply
  - — TTL Compatible Inputs and Outputs
- 35-BIT ACCUMULATION
  - — Round-off Control of MSP Term
  - — Accumulator Can Be Pre-Loaded
- TWO'S COMPLEMENT AND UNSIGNED MAGNITUDE MULTIPLICATION
- PIN COMPATIBLE, HIGH PERFORMANCE REPLACEMENT FOR TRW 1010J, AMD 29510

DESCRIPTION

The LATTICE L1010 devices are high performance 16 × 16-bit double precision multiplier/accumulators. Designed with high speed circuit techniques and a modified Booth's algorithm, the devices feature 45 ns, 65 ns, and 90 ns multiply-accumulate times. These devices offer a performance upgrade and are pin compatible with industry standard multipliers like the TRW 1010J.

UltraMos™, LATTICE's high performance CMOS technology, provide the multipliers with an active power dissipation of 550 mW maximum and a low CMOS standby power consumption of 550 μW maximum.

The L1010 multiplier/accumulators generate a 32-bit product from two 16-bit input busses. The input data can be specified as unsigned magnitude or two's complement, by controlling the state of the TC line. The output of the 32-bit multiplier array is zero-filled or sign extended out to the 35th bit, to provide a 35-bit input into the accumulator.

The accumulator has these functions: add the product to the accumulator, subtract the accumulator from the product, pass the product to accumulator, and preload from external data.

FUNCTIONAL BLOCK DIAGRAM

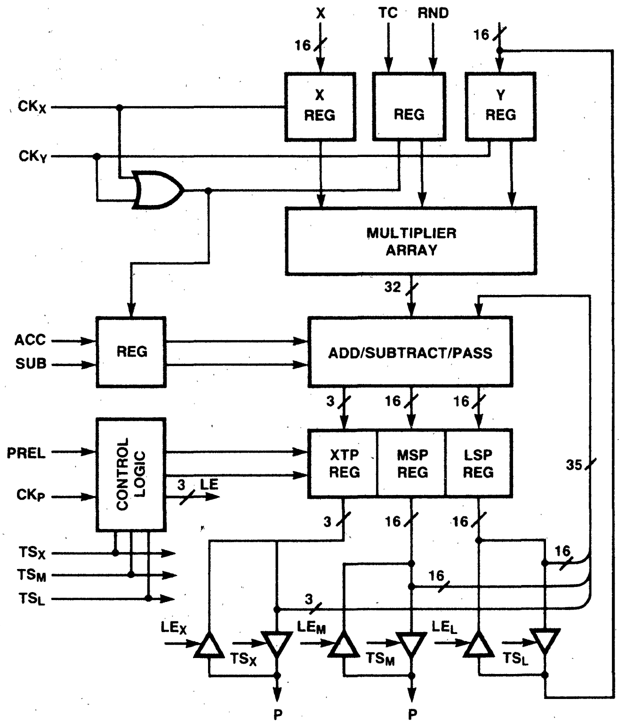
X
TC
RND
16
16
CKX
CKY
X REG
REG
Y REG
MULTIPLIER ARRAY
32
ACC
SUB
REG
ADD/SUBTRACT/PASS
3
16
16
PREL
CKP
CONTROL LOGIC
3 LE
XTP REG
MSP REG
LSP REG
35
3
16
16
TSX
TSM
TSL
16
16
3
LEX
TSX
LEM
TSM
LEL
TSL
P
P

PIN CONFIGURATION

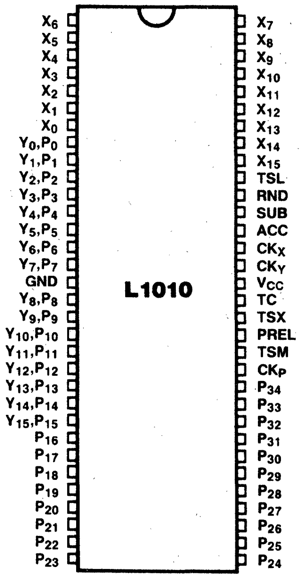
X6
X5
X4
X3
X2
X1
X0
Y0,P0
Y1,P1
Y2,P2
Y3,P3
Y4,P4
Y5,P5
Y6,P6
Y7,P7
GND
Y8,P8
Y9,P9
Y10,P10
Y11,P11
Y12,P12
Y13,P13
Y14,P14
Y15,P15
P16
P17
P18
P19
P20
P21
P22
P23
L1010
X7
X8
X9
X10
X11
X12
X13
X14
X15
TSL
RND
SUB
ACC
CKX
CKY
VCC
TC
TSX
PREL
TSM
CKP
P34
P33
P32
P31
P30
P29
P28
P27
P26
P25
P24

Copyright© August, 1984. This document contains information on a new product. The specifications and information contained herein are subject to change without notice.

LATTICE

L1016

HIGH-SPEED 16 × 16 BIT CMOS MULTIPLIER

FEATURES

- 16 × 16 MULTIPLIER — DOUBLE PRECISION PRODUCT
- HIGH SPEED MULTIPLY
  - — 45 ns Max Clocked Multiply Time
- LOW POWER CMOS TECHNOLOGY
  - — 550 mW Max (active)
  - — 550 μW Max (CMOS Standby)
- SIMPLE INTERFACE
  - — Single 5V ± 10% Supply
  - — TTL Compatible Inputs and Outputs
- ROUND-OFF CONTROL OF MSP TERM
- TWO'S COMPLEMENT AND UNSIGNED MAGNITUDE MULTIPLICATION
- PIN COMPATIBLE, HIGH PERFORMANCE REPLACEMENT FOR TRW MPY016HJ, AMD 29516
- AVAILABLE IN DIP OR LCC PACKAGES

DESCRIPTION

The LATTICE L1016 devices are high performance 16 × 16 bit double precision multipliers. Designed with high speed circuit techniques and a modified Booth's algorithm, the devices feature 45 ns, 65 ns, and 90 ns multiply times. These devices offer a performance upgrade and are pin compatible with industy standard multipliers like the MPY016HJ.

UltraMos™, LATTICE's high performance CMOS technology, provide the multipliers with an active power dissipation of 550 mW maximum and a low CMOS standby power consumption of 550 μW maximum.

The L1016 multipliers generate a 32-bit product from two 16-bit input busses. The input data can be specified as unsigned magnitude or two's complement, by controlling the state of the C_x and C_y mode lines. Mixed input modes are also permitted. The most significant half of the product (MSP) is available on the 16-bit output port. The least significant half (LSP) is multiplexed with MSP and is available at either the 16-bit output port or the Y input port.

FUNCTIONAL BLOCK DIAGRAM

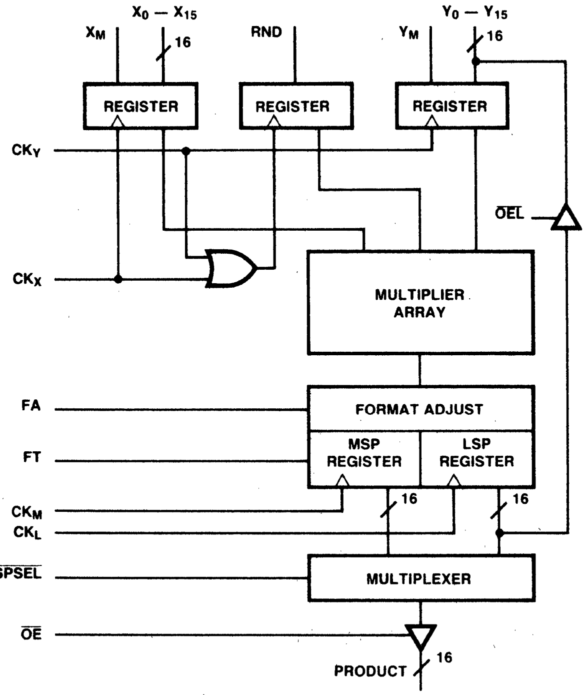
X0 — X15
XM
16
RND
YM
Y0 — Y15
16
REGISTER
REGISTER
REGISTER
CKY
OEL
CKX
MULTIPLIER ARRAY
FA
FORMAT ADJUST
FT
MSP REGISTER
LSP REGISTER
CKM
CKL
16
16
MSPSEL
MULTIPLEXER
OE
PRODUCT
16

PIN CONFIGURATION

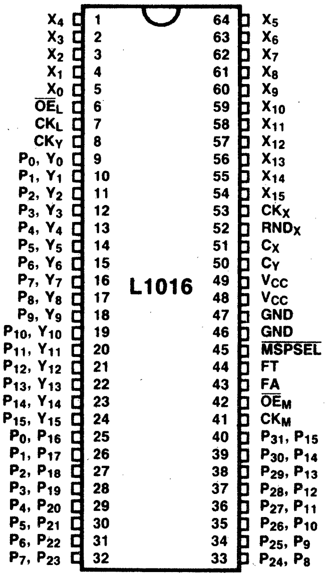
L1016
X4 1
X3 2
X2 3
X1 4
X0 5
OEL 6
CKL 7
CKY 8
P0, Y0 9
P1, Y1 10
P2, Y2 11
P3, Y3 12
P4, Y4 13
P5, Y5 14
P6, Y6 15
P7, Y7 16
P8, Y8 17
P9, Y9 18
P10, Y10 19
P11, Y11 20
P12, Y12 21
P13, Y13 22
P14, Y14 23
P15, Y15 24
P0, P16 25
P1, P17 26
P2, P18 27
P3, P19 28
P4, P20 29
P5, P21 30
P6, P22 31
P7, P23 32
64 X5
63 X6
62 X7
61 X8
60 X9
59 X10
58 X11
57 X12
56 X13
55 X14
54 X15
53 CKX
52 RNDX
51 CX
50 CY
49 VCC
48 VCC
47 GND
46 GND
45 MSPSEL
44 FT
43 FA
42 OEM
41 CKM
40 P31, P15
39 P30, P14
38 P29, P13
37 P28, P12
36 P27, P11
35 P26, P10
34 P25, P9
33 P24, P8

Copyright© August, 1984. This document contains information on a new product. The specifications and information contained herein are subject to change without notice

LATTICE SEMICONDUCTOR CORPORATION 10300 SW GREENBURG ROAD PORTLAND, OR 97223 503/246-2726 TELEX 277338 LSC UR

LATTICE L1017

HIGH SPEED 16 × 16-BIT CMOS MULTIPLIER

FEATURES

- 16 × 16 MULTIPLIER — DOUBLE PRECISION PRODUCT
- HIGH SPEED MULTIPLY
  - — 45 ns Max Clocked Multiply Time
- LOW POWER CMOS TECHNOLOGY
  - — 550 mW Max (active)
  - — 550 μW Max (CMOS Standby)
- SIMPLE INTERFACE
  - — Single 5V ± 10% Supply
  - — TTL Compatible Inputs and Outputs
- ONE REGISTER CLOCK — SEPARATE ENABLES
- TWO'S COMPLEMENT AND UNSIGNED MAGNITUDE MULTIPLICATION
- PIN COMPATIBLE, HIGH PERFORMANCE REPLACEMENT FOR AMD 29517 AND IDT 7217L
- AVAILABLE IN DIP OR LCC PACKAGES

DESCRIPTION

The LATTICE L1017 devices are high performance 16 × 16 bit double precision multipliers. Designed with high speed logic techniques and a modified Booth's algorithm, the devices feature 45 ns, 65 ns, and 90 ns clocked multiply times. These devices offer a performance upgrade and are pin compatible with industry standard multipliers like the AM29517A.

UltraMos™, LATTICE's high performance CMOS technology, provide the multipliers with an active power dissipation of 550 mW maximum and a low CMOS standby power consumption of 550 μW maximum.

The L1017 multipliers generate a 32-bit product from two 16-bit input busses. Internal registers feature separate enable controls with a single common clock. The input data on each port can be individually specified as unsigned magnitude or two's complement, by controlling the state of the C_X and C_Y mode lines. The most significant half of the product (MSP) is available on the 16-bit output port. The least significant half (LSP) is multiplexed with the MSP and can be accessed at the 16-bit output port and the Y operand input port.

FUNCTIONAL BLOCK DIAGRAM

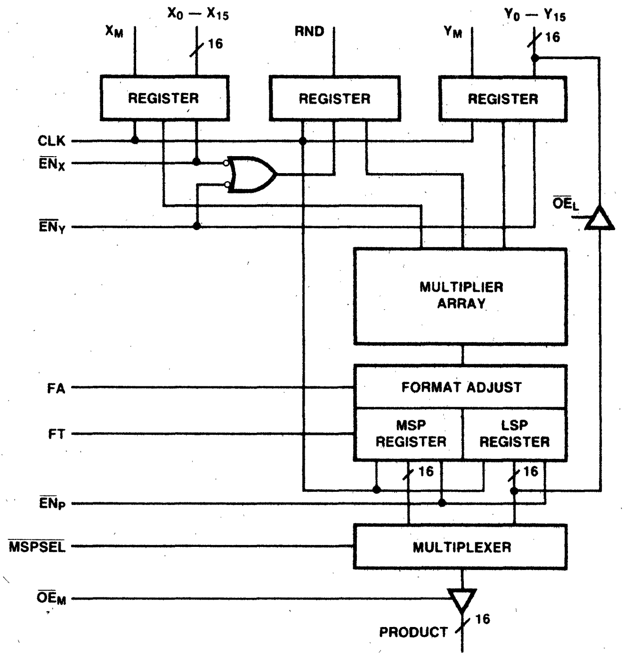

PIN CONFIGURATION

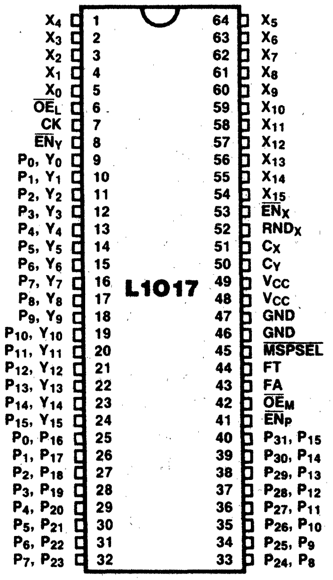

Signal	Pin	Pin	Signal
X_4	1	64	X_5
X_3	2	63	X_6
X_2	3	62	X_7
X_1	4	61	X_8
X_0	5	60	X_9
$\overline{OE}_L$	6	59	X_{10}
CK	7	58	X_{11}
$\overline{EN}_Y$	8	57	X_{12}
P_0, Y_0	9	56	X_{13}
P_1, Y_1	10	55	X_{14}
P_2, Y_2	11	54	X_{15}
P_3, Y_3	12	53	$\overline{EN}_X$
P_4, Y_4	13	52	RND_X
P_5, Y_5	14	51	C_X
P_6, Y_6	15	50	C_Y
P_7, Y_7	16	49	V_{CC}
P_8, Y_8	17	48	V_{CC}
P_9, Y_9	18	47	GND
P_{10}, Y_{10}	19	46	GND
P_{11}, Y_{11}	20	45	$\overline{MSPSEL}$
P_{12}, Y_{12}	21	44	FT
P_{13}, Y_{13}	22	43	FA
P_{14}, Y_{14}	23	42	$\overline{OE}_M$
P_{15}, Y_{15}	24	41	$\overline{EN}_P$
P_0, P_{16}	25	40	P_{31}, P_{15}
P_1, P_{17}	26	39	P_{30}, P_{14}
P_2, P_{18}	27	38	P_{29}, P_{13}
P_3, P_{19}	28	37	P_{28}, P_{12}
P_4, P_{20}	29	36	P_{27}, P_{11}
P_5, P_{21}	30	35	P_{26}, P_{10}
P_6, P_{22}	31	34	P_{25}, P_9
P_7, P_{23}	32	33	P_{24}, P_8

Copyright© August, 1984. This document contains information on a new product. The specifications and information contained herein are subject to change without notice.

LATTICE SEMICONDUCTOR CORPORATION 10300 SW GREENBURG ROAD PORTLAND, OR 97223 503/246-2726 TELEX 277338 LSC UR

ABSOLUTE MAXIMUM RATINGS(1)

SYMBOL	RATING	VALUE	UNIT
C_{TERM}	Terminal Voltage with Respect to GND(2)	−0.5 to +7.0	V
T_A	Operating Temperature	0 to +70	°C
T_{BIAS}	Temperature Under Bias	−55 to +125	°C
T_{STG}	Storage Temperature	−65 to +150	°C
P_T	Power Dissipation	1.0	W
I_{OUT}	DC Output Current	50	mA

1. Stresses greater than those listed under ABSOLUTE MAXIMUM RATINGS may cause permanent damage to the device. This is a stress rating only and functional operation of the device at these or any other conditions above those indicated in the operational sections of this specification is not implied. Exposure to absolute maximum rating conditions for extended periods may affect reliability.

RECOMMENDED DC OPERATING CONDITIONS ($T_A = 0°C$ to $+70°C$)

SYMBOL	PARAMETER	MIN	TYP	MAX	UNIT
V_{CCM}	Military Supply Voltage	4.5	5.0	5.5	V
V_{CCC}	Commercial Supply Voltage	4.5	5.0	5.5	V
GND	Supply Voltage	0	0	0	V
V_{IH}	Input High Voltage	2.0	—	—	V
V_{IL}	Input Low Voltage	—	—	0.8	V

DC ELECTRICAL CHARACTERISTICS

(Commercial: $V_{CC} = 5V \pm 10\%$, $T_A = 0°C$ to $70°C$; Military: $V_{CC} = 5V \pm 10\%$, $T_A = -55°C$ to $125°C$)

SYMBOL	PARAMETER	TEST CONDITIONS	COMMERCIAL MIN.	COMMERCIAL MAX.	MILITARY MIN.	MILITARY MAX.	UNIT
$\lvert I_{LI} \rvert$	Input Leakage Current	$V_{CC} = Max, V_{IN} = 0$ to V_{CC}	—	2	—	10	μA
$\lvert I_{LO} \rvert$	Output Leakage Current	High Z, $V_{CC} = max., V_{OUT} = 0$ to V_{CC}	—	2	—	10	μA
I_{CC}(1)	Operating Power Supply Current	Output Open	—	100	—	120	mA
I_{CCQ1}	Quiescent Power Supply Current	$V_{IN} \geq V_{IH}, V_{IN} \leq V_{IL}$	—	30	—	30	mA
I_{CCQ2}	Quiescent Power Supply Current	$V_{IN} \geq V_{CC} - .2V$ or $\leq .2V$	—	.1	—	.1	mA
V_{OH}	Output High Voltage	$V_{CC} = Min., I_{OH} = -0.4$ mA	2.4	—	2.4	—	V
V_{OL}	Output Low Voltage	$V_{CC} = Min., I_{OL} = 4.0$ mA	—	0.5	—	0.5	V

1. I_{CC} is measured at clock cycle = 10 mhz and V_{IN} = TTL voltages.

AC TEST CONDITIONS

Input Pulse Levels	GND to 3.0V
Input Rise and Fall Times	5 ns
Input Timing Reference Levels	1.5V
Output Reference Levels	1.5V
Output Load	See Figures 1 and 2

CAPACITANCE ($T_A = 25°C$, f = 1.0 MHZ)

SYMBOL	ITEM	CONDITIONS	MAX.	UNIT
C_{IN}	Input Capacitance	$V_{IN} = 0V$	10	pF
C_{OUT}	Output Capacitance	$V_{OUT} = 0V$	12	pF

NOTE: This parameter is sampled and not 100% tested.

TEST LOADS

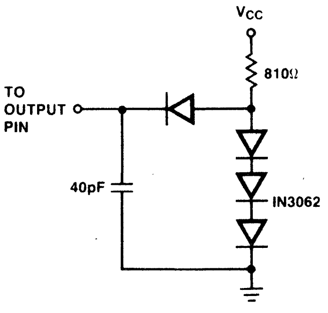

Figure 1. A.C. Output Test Load

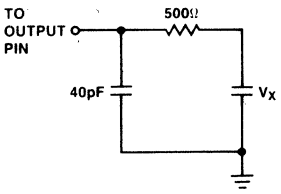

Figure 2. Output Three State Delay Load

V_x = 0V or 2.6V

PACKAGE INFORMATION

64-PIN HERMETICALLY SEALED DUAL IN-LINE PACKAGE
Dimensions shown in inches and (mm).

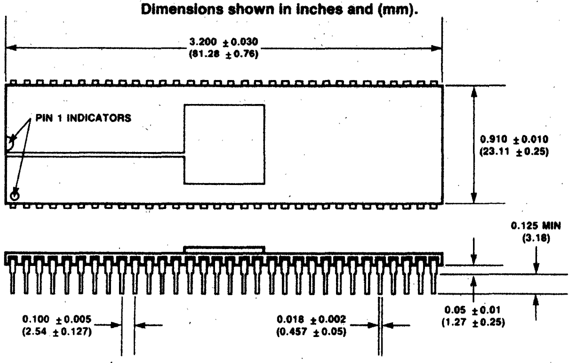
3.200 ±0.030
(81.28 ±0.76)
PIN 1 INDICATORS
0.910 ±0.010
(23.11 ±0.25)
0.125 MIN
(3.18)
0.100 ±0.005
(2.54 ±0.127)
0.018 ±0.002
(0.457 ±0.05)
0.05 ±0.01
(1.27 ±0.25)

68-TERMINAL LEADLESS CHIP CARRIER
Dimensions shown in inches and (mm).

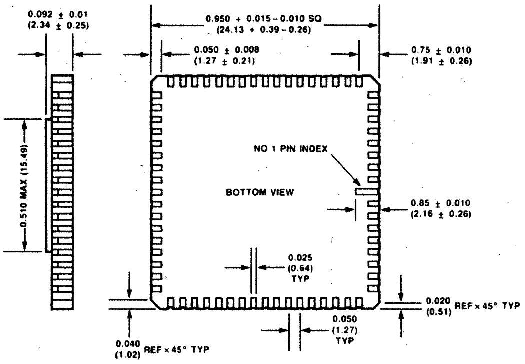
0.092 ± 0.01
(2.34 ± 0.25)
0.950 + 0.015 − 0.010 SQ
(24.13 + 0.39 − 0.26)
0.050 ± 0.008
(1.27 ± 0.21)
0.75 ± 0.010
(1.91 ± 0.26)
0.510 MAX (15.49)
NO 1 PIN INDEX
BOTTOM VIEW
0.85 ± 0.010
(2.16 ± 0.26)
0.025
(0.64)
TYP
0.020
(0.51)
REF × 45° TYP
0.050
(1.27)
TYP
0.040
(1.02)
REF × 45° TYP

NOTE
1 CONTACTS ARE GOLD PLATED

ORDERING INFORMATION

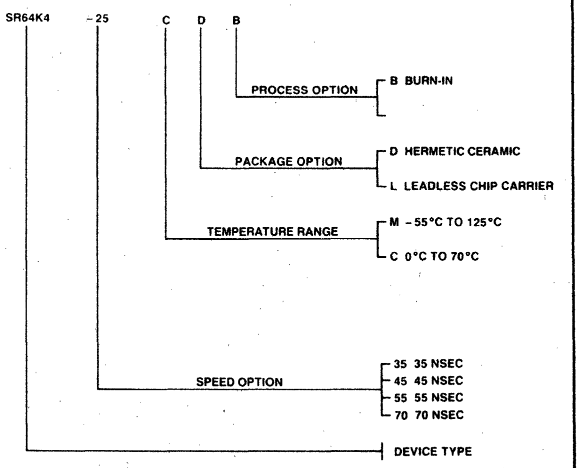
SR64K4
−25
C
D
B
PROCESS OPTION
B BURN-IN
PACKAGE OPTION
D HERMETIC CERAMIC
L LEADLESS CHIP CARRIER
TEMPERATURE RANGE
M −55°C TO 125°C
C 0°C TO 70°C
SPEED OPTION
35 35 NSEC
45 45 NSEC
55 55 NSEC
70 70 NSEC
DEVICE TYPE

LATTICE

Product Availability Guide

PRODUCTS	COMMERCIAL SPEEDS (NS)	PACKAGES	COMMERCIAL		MILITARY		
			SAMPLES	PRODUCTION	MIL-TEMP RANGE PRODUCTION	SCREENED TO MIL-STD 5004	QUALIFIED 883C PRODUCTION
STATIC RAM							
SR64K4 (16K×4)	35,40,45,55	C,P,R	Now	Now	Now	Q4 '85	Q1 '86
SR64E4 (16K×4)	35,40,45,55	C,P,R	Now	Now	Now	Q4 '85	Q1 '86
SR64K1 (64K×1)	35,40,45,55	C,P,R	Q4 '85	Q1 '86	Q1 '86	Q2 '86	Q3 '86
SR64K8 (8K×8)	35,40,45,55	C,P,R	Q4 '85	Q1 '86	Q1 '86	Q2 '86	Q3 '86
SR16K4 (4K×4)	25,30,35,40,45	C,P,R	Q4 '85	Q1 '86	Q1 '86	Q2 '86	Q3 '86
SR16K8 (2K×8)	25,30,35,40,45	C,P,R	Q1 '86	Q2 '86	Q2 '86	Q3 '86	Q4 '86
SR256K1 (256K×1)	35,40,45,55	C,P,R	Q3 '86				
SR256K4 (64K×4)	35,40,45,55	C,P,R	Q3 '86				
SR256K8 (32K×8)	35,40,45,55	C,P,R	Q4 '86				
REPROGRAMMABLE LOGIC							
GAL™ 16V8 (20 PIN, PAL® COMPATIBLE)	25,35,45	D,P,J,R	Now	Q4 '85	Q4 '85	Q1 '86	Q2 '86
GAL™ 20V8 (24 PIN, PAL® COMPATIBLE)	25,35,45	D,P,J,R	Q4 '85	Q4 '85	Q4 '85	Q1 '86	Q2 '86
ispGAL™ 16Z8 (24 PIN, IN-SYSTEM PROGRAMMABLE)	25,35,45	D,P,J,R	Q1 '86	Q2 '86	Q2 '86	Q3 '86	Q4 '86
ispGAL™ 20Z8 (28 PIN, IN-SYSTEM PROGRAMMABLE)	25,35,45	D,P,J,R	Q1 '86	Q2 '86	Q2 '86	Q3 '86	Q4 '86
EEPROM							
EE64K8 (8K×8, EEPROM COMPATIBLE)	70,90,100	C,R	Now	Q1 '86	Q1 '86	Q2 '86	Q3 '86
EE64K8A (8K×8, EEPROM COMPATIBLE)	45,55	C,R	Q2 '86				
PR64K8 (8K×8, BIPOLAR-PROM COMPATIBLE)	70,90,100	C,R	Now	Q1 '86	Q1 '86	Q2 '86	Q3 '86
DIGITAL SIGNAL PROCESSING							
L1010 (16×16 BIT MULT./ACCUM.)	45,55,65	C,R	Q1 '86	Q2 '86	Q2 '86	Q3 '86	Q4 '86
L1016 (16×16 BIT MULT.)	45,55,65	C,R	Q1 '86	Q2 '86	Q2 '86	Q3 '86	Q4 '86
L1017 (16×16 BIT MULT., 29517 COMPATIBLE)	45,55,65	C,R	Q1 '86	Q2 '86	Q2 '86	Q3 '86	Q4 '86
DP16K8 (2K×8 DUAL PORT)	45,55	C,R	Q1 '86	Q2 '86	Q2 '86	Q3 '86	Q4 '86
FF16K9 (2K×9 FIFO)	35,45,55	C,R	Q2 '86				

Packaging — C = Side-brazed ceramic dip, P = Plastic, R = Leadless chip carrier, J = J lead plastic chip carrier, D = Cerdip.
GAL16V8 and GAL20V8 products are available initially in plastic only, the remaining products are available initially in C and R package types; please call or write for availability of P, J and D packages.

To order commercial or military (−55°C to +125°C) devices, call Kierulff Electronics or any one of the LATTICE sales representatives listed on back. For technical information, call or write LATTICE Semiconductor Corporation, 15400 NW Greenbrier Parkway, Beaverton, OR 97006, Tel. 503-629-2131, Telex 277338 LSC UR, Fax 503-645-7921.

® PAL is a registered trademark of Monolithic Memories, Inc.
GAL™ is a trademark of LATTICE Semiconductor Corporation.

LATTICE DISTRIBUTORS AND SALES REPRESENTATIVES

Alabama
Beacon Electronics
11309 S. Memorial Pkwy., #A
Huntsville, AL 35803
205/881-5031
TWX 810/726-2136

Arkansas
Beacon Electronics
4024 Sam Peck Road
Little Rock, AR 72212
501/224-5449
TWX 910/722-7310

Arizona
Shefler-Kahn Company
2017 North 7th Avenue
Phoenix, AZ 85006
602/257-9015
FAX 602/252-3431
TWX 910/951-0659

California
H-Technical Sales
12453 Lewis, Suite 101
Garden Grove, CA 92640
714/740-0161
FAX 714/740-2139

Earle Associates
7585 Ronson Road, Suite 200
San Diego, CA 92111
619/278-5441
TWX 910/335-1585

H-Technical Sales
1580 Oakland Blvd., Suite 210-C
San Jose, CA 95131
408/279-2443 FAX-408-279-0325

Colorado
Wescom Marketing
4891 Independence Street
Suite 201
Wheat Ridge, CO 80033
303/773-0225
TLX 535420

Florida
Donato & Associates
5401 Kirkman Road, Suite 785
Orlando, FL 32819
305/352-0727

Georgia
Beacon Electronics
6135 Barfield Road, Suite 240
Atlanta, GA 30328
404/256-9640
TWX 810/751-3165

Iowa
Rush & West Associates
#3 Columbia Court, N.W.
Davenport, IA 52804
319/326-3091

Illinois
Omni Electronic Marketing
62 Flint Drive
Barrington, IL 60010
312/381-9087
TLX 206273

Kansas
Rush & West Associates
107 North Chester
O'Lathe, KN 66061
913/764-2700
TWX 910/749-6404

Massachusetts
Advanced Technical Sales
50 Mall Road, Suite G02
Burlington, MA 01803
617/272-0100
FAX 617/272-1515

Maryland
Delta III Associates
1000 Century Plaza, Suite 224
Columbia, MD 21044
301/730-4700
TWX 710/862-1906

Michigan
KRW Sales
PO Box 163
Belmont, MI 49306
616/363-2925

Minnesota
P.S.I. Company
7732 West 78th Street
Minneapolis, MN 55435
612/944-8545

Missouri
Rush & West Associates
720 Manchester Rd., Suite 200
Ballwin, MO 63001
314/394-7271
TLX 752-653

North Carolina
Beacon Electronics
5109 Holly Ridge Road, Suite 105
Raleigh, NC 27620
919/787-0330
TWX 510/928-0592
FAX 919/781-8431

New Jersey
BGR Associates
525 Route 73, Suite 100
Marlton, NJ 08053
609/983-1020
TWX 710/940-1385

New Mexico
Shefler-Kahn Company
2709-J Pan American Fwy., NE
Albuquerque, NM 87107
505/345-3591
FAX 505/345-3593

New York
Tri-Tek Associates
3366 Hillside Avenue
New Hyde Park, NY 11040
516/747-8851

Ohio
KRW Sales
PO Box 14324
Columbus, OH 43214
614/464-1861

KRW Sales
PO Box 45008
Westlake, OH 44145
216/871-7521
TLX 980131 WDMR

Oklahoma
Beacon Electronics
8308 S. 77th East Ave., Suite 1103
Tulsa, OK 74133
918/252-5181

Oregon
LD Electronics
PO Box 626
Beaverton, OR 97075
503/649-8556
TWX 910/467-8713

Pennsylvania
KRW Sales
227 Allegheney Avenue
Oakmont, PA 15139
412/261-1323

Texas
Beacon Electronics
12701C Research Blvd.
Suite E
Austin, TX 78759
512/331-5115
TWX 910/380-8801

Beacon Electronics
13773 N. Central Expressway
Suite 1230
Dallas, TX 75243
214/437-1505
TWX 910/860-5585

Utah
Wescom Marketing
2330 South Main, Suite 5
Salt Lake City, UT 84115
801/466-9594

Virginia
Delta III Associates
12616 E. Hampton Drive
Midlothian, VA 23113
804/272-2497
TWX 710/862-1906

Washington
LD Electronics
7410 77th Avenue
Snohomish, WA 98290
206/568-0511

LD Electronics
PO Box 14586
Spokane, WA 99214
509/922-4883

Wisconsin
Omni Electronic Marketing
6810 Schroeder Road
Madison, WI 53711
414/548-1971

Distributed Nationwide by Kierulff Electronics 1-800-367-7767

LATTICE
SEMICONDUCTOR CORP

MEET THE HARDEST WORKING CHIPS IN THE BUSINESS

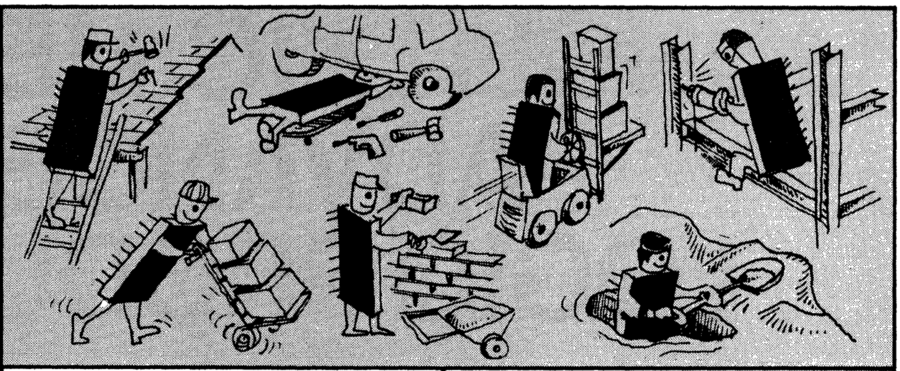

PROGRAMMABLE INTEGRATED CONTROLLER/SEQUENCER

Microprocessor designed for applications requiring simple decision-making, not computation.

LS7270: Performs logical sequencing, timing, and controlling functions. Far more easily programmed than any other μP, and program can be stored in any standard ROM, PROM, EPROM, or RAM. Low-cost, reliable replacement for hard-wired controls and relay networks. 40-pin DIP.

DIGITAL LOCK CIRCUITS

For automotive/marine anti-theft.

LS7220: 5,040 4-digit combinations; out-of-sequence detection logic; 25μA standby; "Save" mode for valet parking settable in "Unlock"; built-in convenience delay. 14-pin DIP.

For area access and machine access.

LS7225-LS7226: 5,040 4-digit combinations; toggle output (set and reset with application of code); momentary output; tamper output. 14-pin DIP.

For serial address decoding or 2-pushbutton keyless locks.

LS7228-LS7229: Address decoder/digital lock; code programmable through 9 parallel pins; serial decoding input can be applied through dual pulse train or two pushbuttons; pulse output; duration between entries capacitor programmable; cascadable. 16-pin DIP.

BRUSHLESS DC MOTOR SPEED CONTROLLERS

LS7261/62: 3 or 4-phase commutator chips; overcurrent sensing; brake; reverse. 20-pin DIP.

LS7263: Crystal controlled 3-phase motor speed controller; for fixed speed applications; accuracy 0.1%. 18-pin DIP.

LS7264: Crystal controlled 4-phase motor speed controller; for fixed speed applications; accuracy 0.1%. 16-pin DIP.

PROGRAMMABLE DIGITAL DELAY TIMER

For delaying the starting or stopping of an operation.

LS7210: Can generate delays of ms to infinity, or add auto reset to μP system; programmed by 5 binary weighted input bits plus on chip oscillator or external clock. Operable in 4 modes: delayed operate or release, dual delay, or one-shot. All inputs CMOS, MOS, and TTL compatible. 14-pin DIP.

TOUCH SENSITIVE LAMP DIMMER/AC MOTOR SPEED CONTROLLER

Circuits digitally determine firing angle of a triac. Phase locked loop synchronization makes triac output "Pure AC", allowing triac to drive motor or transformer windings directly.

LS7231-35: Momentary touch turns triac off, if on; if off, momentary touch turns triac to maximum or to firing angle stored in MEMORY (depending on circuit). Prolonged touch causes firing angle to vary. 8 pin mini-DIP.

LS7237: A touch causes firing angle to advance to next state in sequence. Three state input pin ("1", "0", or "open") selects one of 3 modes of firing angle sequence: MAX/OFF; LOW/MED/MAX/OFF; MIN/LOW/MED/MAX/OFF. Pin compatible with LS7231-LS7235. 8 pin mini-DIP.

DISPLAY DRIVERS

For liquid crystal displays requiring up to 60V.

LS7100: BCD to 7 segment latch/decoder/driver.

LS7110: Binary addressable latched 8-channel demultiplexer/driver. Both are ion-implanted P Channel MOS circuits, compatible with CMOS and TTL systems. 16-pin DIPS.

CMOS DIVIDERS

For generating time bases from 50/60 Hz input. All feature: input shaping network; resettable; division select input 50/60 Hz; clock enable input; 8-pin mini-DIP.

RED 5/6: 10 pulses/sec.
RED 50/60: 1 pulse/sec.
RED 100/120: 1 pulse/2 seconds.
RED 300/360: 1 pulse/0.1 minute.
RED 500/600: 1 pulse/10 seconds.
RED 3000/3600: 1 pulse/minute.

For generating decade-related time bases.

RDD104: Addressable divider; divides by 10, 100, 1000, or 10,000. Input may be controlled by crystal or external frequency source. 8-pin mini-DIP.

LSI COMPUTER SYSTEMS INC.
Since 1969
Manufacturers of Custom and Standard LSI circuits.
1235 Walt Whitman Rd., Melville, NY 11747
(516) 271-0400. TWX: 510 226-7833.

COUNTERS

LS7066: 24-bit multimode counter. Programmable by microprocessor, via three-state I/O bus, to operate in the following modes: binary, BCD, 24 hour clock, up, down, ÷n, quadrature, and single cycle. Modes can co-exist in different combinations. DC to 5 MHz in all modes. Includes 24-bit comparator for pre-set count comparison; readable status register. Input/output TTL compatible. 20-pin plastic DIP.

LS7060: DC to 10 MHz 32-bit binary up counter with 32-bit latch and multiplexer; 8-bit three-state multiplexed outputs; input/output TTL compatible; bus compatible. 18-pin DIP.

LS7062: Identical except that it is a dual 16-bit counter, with two inputs.

LS7061: DC to 10 MHz 32-bit binary up counter with 40-bit latch and multiplexer; access to 8 LSB latches allows attachment of prescalers for counting to 2.56 GHz; 8-bit three-state multiplexed outputs; input/output TTL compatible; bus compatible. 24-pin DIP.

LS7063: Identical, except that it is a dual 16-bit counter, with two inputs.

LS7030: DC to 5 MHz eight decade up counter with 8-decade latch and multiplexer, multiplexed BCD and 7 segment outputs; inputs CMOS and TTL compatible; outputs CMOS compatible; counter output latches; leading zero blanking. 40-pin DIP.

LS7031: DC to 5 MHz six decade up counter with 8-decade latch and multiplexer, access to LSD latches allows attachment of prescalers for counting to 500 MHz; multiplexed BCD outputs; leading zero blanking; inputs CMOS and TTL compatible; outputs CMOS compatible. 40-pin DIP.

LS7055: DC to 250 KHz six decade up/down counter with integral preset, presignal, and main signal store; automatic or manual preset/reset control; 3 comparators with output flags; multiplexed BCD, 7 segment outputs and blanking override; internal oscillator; high noise immunity; all inputs CMOS compatible. 40-pin DIP.

LS7056: Identical, except that it has lamp test input instead of blanking override.

For our custom capabilities please see IC Master, CUSTOM SECTION, page 4675.

MONOLITHIC MEMORIES ADVANCED LOGIC PRODUCTS

THE LOGICAL SOLUTION

Advanced Logic Elements Selection Guide

Function	Part Number	Temp.	Pin	Package	Features	
Octal Counter	SN54/74LS461	MIL COM	28 28	JS,W NS,JS	10.5 MHz 12.5 MHz	f_{MAX} maximum clock frequency
8 bit Up/Down counter	SN54/74LS469	MIL COM	28 28	JS,W NS,JS	10.5 MHz 12.5 MHz	
Octal shift register	SN54/74LS498	MIL COM	28 28	JS,W NS,JS	10.5 MHz 12.5 MHz	
Multifunction register	SN54/74LS380	MIL COM	28 28	JS,W NS,JS	10.5 MHz 12.5 MHz	
10-bit counter	SN54/74LS491	MIL COM	28 28	JS,W NS,JS	10.5 MHz 12.5 MHz	
16:1 Mux	SN54/74LS450	MIL COM	28 28	JS,W NS,JS	45 ns 40 ns	t_{PD} max. input to output delay
Dual 8:1 Mux	SN54/74LS451	MIL COM	28 28	JS,W NS,JS	45 ns 40 ns	
Quad 4:1 Mux	SN54/74LS453	MIL COM	28 28	JS,W NS,JS	45 ns 40 ns	
10-bit comparator	SN54/74LS460	MIL COM	28 28	JS,W NS,JS	45 ns 40 ns	

FIRST-IN FIRST-OUT BUFFER MEMORIES

Product Selection and Application Reference Guide

Low-Power FIFOs

Cascadable/Standalone	Maximum Data Rate	Organization	Maximum I_{CC}	Features	Packages	Pins
67L401	5MHz	64 x 4	110mA		N,J,NL(20)	16
67L402	5MHz	64 x 5	130mA		N,J,NL(20)	18
C67L401D *	17MHz	64 x 4	100mA	I_{OL}=24mA	N,J,NL(20)	16
C67L402D *	17MHz	64 x 5	100mA	I_{OL}=24mA	N,J,NL(20)	18
C67L403D *	17MHz	64 x 5	110mA	I_{OL}=24mA, 3-State, Status Flags	N,J,NL(20)	20
C67L4013D *	17MHz	64 x 4	105mA	I_{OL}=24mA, 3-State	N,J,NL(20)	16
C67L4023D *	17MHz	64 x 5	105mA	I_{OL}=24mA, 3-State	N,J,NL(20)	18

*Not released yet

High-Performance FIFOs

Standalone	Maximum Data Rate	Organization	Features	Packages	Pins
67411A	35MHz	64 x 4	I_{OL}=24mA	J	16
67412A	35MHz	64 x 5	I_{OL}=24mA	J	18
67413A	35MHz	64 x 5	I_{OL}=24mA, 3-State, Status Flags	J	20
67411	25MHz	64 x 4	I_{OL}=24mA	J	16
67412	25MHz	64 x 5	I_{OL}=24mA	J	18
67413	25MHz	64 x 5	I_{OL}=24mA, 3-State, Status Flags	J	20

Standard FIFOs

Cascadable	Standalone	Maximum Data Rate	Organization	Packages	Pins
C67401	67401	10MHz	64 x 4	N,J,NL(20)	16
C67402	67402	10MHz	64 x 5	N,J,NL(20)	18
C67401A	67401A	15MHz	64 x 4	N,J,NL(20)	16
C67402A	67402A	15MHz	64 x 5	N,J,NL(20)	18
C67401B	67401B	16.7MHz	64 x 4	J	16
C67402B	67402B	16.7MHz	64 x 5	J	18

System FIFOs

Device	Description	Organization	Packages	Pins	Maximum Frequency
67417	**Serializing FIFO Memory** Serial data buffering with optional Serial-to-Parallel or Parallel-to-Serial data conversion	64 x 8/9	J	24	28MHz Serial 10MHz Parallel
674219	**FIFO RAM Controller** Provides control for SRAM to act as a FIFO buffer	Up To 64K Words	J	40	24MHz Clock

FIFO Applications

Application	Key Requirements	FIFO Products
Microprocessor/CPU Buffering	Data Rate of Processor System Architecture (word width)	74S225/A C/67401/2A/B 67411/2/3A
Peripherals	High Data Rate or Low Power Status Flags	C/67401/2A/B 67L401/2 C67L401/2/3D
Data/Telecom	High Data Rate or Low Power Status Flags Word Depth (High Storage Capacity) Data Format (Serial or Parallel)	C67L401/2/3D 674219 67417
Data Acquisition	High Data Rate	67411/2/3A 74S225A

FIFO Application Notes

From Monolithic Memories "System Design Handbook"

Number	Title	Page
AN-112	FIFOs: Rubber-Band Memories to Hold Your System Together	5-3
AN-149	FIFOs: Operations and Applications	5-11
AN-150	Second Generation FIFOs Simplify System Design and Open New Application Areas	5-23
CP-123	Multiprocessing Architectures: A New Frontier for VLSI Applications	5-31
AN-100	PROMs, PALs, FIFOs, and Multipliers Team UP to Implement Single-Board High-Performance Audio Spectrum Analyzer	12-3
CP-116	System Solutions for a High-Speed Processor Using Innovative ICs	7-3

Monolithic Memories FIFO Technical Support Hotline
1-800-BIPOLAR EXT. 6197 or 6239
(247-6527)

Arithmetic and Logic Selection Guide

Arithmetic and Logic Elements

Description	Part Number	Max Add Time	Max Carry (or Generate) Time	Pins
4-bit ALU	5/74S381	27ns	20ns	20
4 Group carry-look-ahead generator	5/74S382		7ns	16

Encoder Priority

Description	Part Number	Output	Max Logic Delays	Pins
High-Speed Schottky Priority Encoders	SN54/74S148 SN54/74S348	Totem-Pole 3-State	$D_i - A_i = 13$ nsec D_i — GS, EO = 15 nsec	16

Look-Up Tables

Description	Part Number	Max Access Time	Pins
Sine (0°–90°) Look-Up Table	6086/7	100 ns	24
	5086/7	150 ns	24

Co-Processor Multiplier/Divider with Accumulator

Description	Part Number	Max Multiplication Time/ Max Division Time	Pins
8 bits	SN74S508 SN54S508	.8 μs/2.2 μs	24
16 bits	SN74S516 SN54S516	1.5 μs/3.5 μs	24

Cray Multipliers

Description	Part Number	Max Delay	Pins
8x8 Multiplier (latched)	SN74S557	60 ns (X_i, Y_i to S_{15})	40
8x8 Multiplier (latched)	SN54S557	60 ns	40
8x8 Multiplier (latched)	SN74S558	60 ns	40
8x8 Multiplier (latched)	SN54S558	60 ns	40
16x16 Multiplier	54/74S556	60 ns	88

Dynamic RAM Controller/Drivers

Part Number	Pins	Description	Support Capability	Drive Capability
SN74S408	48,	Dynamic RAM Controller/Driver	16K, 64K	500 pF
SN74S408-2	48,	Speed Option	16K, 64K	500 pF
SN74S408-3	48,	Speed Option	16K, 64K	500 pF
SN74S409	48,	Multimode Dynamic RAM Controller/Driver	16K, 64K, 256K	500 pF
SN74S409-2	48,	Speed Option	16K, 64K, 256K	500 pF
SN74S409-3	48,	Speed Option	16K, 64K, 256K	500 pF

Dynamic RAM Drivers

Part Number	Pins	Power	Polarity	Enable	Max Prop. Delay @ 500 pF
SN54S700/-1 MIL	20 (L20)	S	Invert	High-Low	35ns/40ns
SN74S700/-1 COM	20 (NL20)				35ns/40ns
SN54S730/-1 MIL	20 (L20)			Low	35ns/40ns
SN74S730/-1 COM	20 (NL20)				35ns/40ns
SN54S731/-1 MIL	20 (L20)	S	Non-Invert	High-Low	35ns/40ns
SN74S731/-1 COM	20 (NL20)				35ns/40ns
SN54S734/-1 MIL	20 (L20)			Low	35ns/40ns
SN74S734/-1 COM	20 (NL20)				35ns/40ns

ECL10KH for High Performance System Design.

The designer of high-performance digital systems now has new alternatives with the introduction of Monolithic Memories' ECL 10KH family of Logic. Monolithic Memories' ECL 10KH devices are completely equivalent to Motorola's MECL 10KH. This means that the system designer can take advantage of the high performance of ECL 10KH logic, and eliminate the woe of having a sole-sourced logic family.

ECL logic is used in a broad range of applications that demand high speed and a stable system environment. ECL 10KH represents a particular optimization of semiconductor technology towards ease of use in systems. A summary of the advantages of ECL 10KH may be of use to the system designer.

ECL 10KH, in general, is compatible with 10K ECL logic, but it is faster, offers better noise margin, and operates at equal power as compared to MECL 10K logic. Propagation delays, and clock speeds are 100% better, and noise immunity is improved 75% over the MECL 10K series. The basic power dissipation of 25 mW/Gate is comparable to MECL 10K.

To obtain better circuit speeds, new semiconductor processing is used with ECL 10KH. Smaller transistors result from this processing, allowing greater speed. Other design changes are employed in ECL 10KH, over the basic MECL 10K gate structure, which yield better DC performance as well. ECL 10KH is a voltage-compensated logic family, allowing guaranteed DC and AC parameters over a ±5% power supply range. Voltage-compensation allows for smaller semiconductor die sizes for a given function as compared with ECL devices employing both voltage compensation and temperature compensation. Smaller die sizes translate into a lower production cost, which in turn means a lower cost to the end user.

FUNCTION	DEVICE
NOR Gate	
Quad 2-Input	MC10H102
Quad 2-Input NOR w/strobe	MC10H100
Triple 4-3-3-3 Input NOR	MC10H106
Quad 3-Input 3-Output	MC10H211
OR Gate	
Quad 2-Input	MC10H103
Dual 3-Input 3-Output	MC10H210
AND Gates	
Quad AND	MC10H104
Complex Gates	
OR-AND/OR-AND-Invert	MC10H117
4 wide OR-AND/OR-AND-Invert	MC10H121
Quad OR/NOR	MC10H101
Triple 2-3-2 Input OR/NOR	MC10H105
Triple Exclusive OR/NOR	MC10H107
Dual 4-5 Input OR/NOR	MC10H109
Dual 2-wide 3-Input OR-AND	MC10H118
Translators	
Quad TTL to ECL	MC10H124
Quad ECL to TTL	MC10H125
Receivers	
Quad Line Receiver	MC10H115
Triple Line Receiver	MC10H116
Flip-Flop Latches	
Dual D Master Slave Flip-Flop	MC10H131
Dual Latch	MC10H130
Hex D-Master Slave Flip-Flop	MC10H176
Quint Latch	MC10H175

FUNCTION	DEVICE
Parity Checker	
12-Bit Parity Generator-Checker	MC10H160
Encoders Decoders	
Binary to 1-8 (Low)	MC10H161
Binary to 1-of-8 Decoder	MC10H162
Data Selector Multiplexer	
Quad 2-Input Multiplexers (Non-Inverting)	MC10H158
Quad 2-Input Multiplexers (Inverting)	MC10H159
Quad 2-Input Multiplexer Latch	MC10H173
Dual 4-1 Multiplexer	MC10H174
8 Line Multiplexer	MC10H164
Counters	
Universal Hexadecimal	MC10H136
Binary Counter	MC10H016
Special Function	
5-Bit Magnitude Comparator	MC10H166
4-Bit Universal Shift Register	MC10H141
16x4 Bit Register File	MC10H145
Memories	
16x4 Bit Register File	MC10H145

The Logical Solution

Double-Density-PLUS™ Interface provides:

- 20% increase in speed
- Twice the storage capacity
- Twice the input/output ports
- Two or more 8-bit devices in one SKINNYDIP® package
- Two technologies: Bipolar and CMOS
- Cost advantages
- All this with half the original board space

Double-Density-PLUS Interface Typical Applications

'LS/ACT 793/4 Applications

- INSTRUMENTATION
- MICROPROCESSORS
- PERIPHERALS

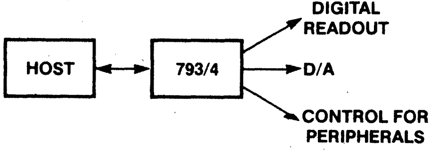
DIGITAL READOUT
HOST
793/4
D/A
CONTROL FOR PERIPHERALS

'LS/ACT 546 and 646 Series' Applications
Storage for Address/Data/Controls

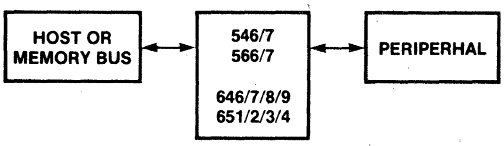
HOST OR MEMORY BUS
546/7
566/7
646/7/8/9
651/2/3/4
PERIPERHAL

Estimated Area and Cost Savings Using LS646

DEVICE(S)	BOARD AREA*		COST**	
	ACTUAL	NORMALIZED	ACTUAL	NORMALIZED
One LS646	0.36	1.00	5.00	1.00
Two LS374s One LS245 Four LS157s	1.85	5.14	5.30	1.06

* Actual dimensions specified in square inches. Tolerances should be taken into consideration.

** All costs reflect N STD packaging for one thousand devices as of Jan. 1985.

Double-Density-PLUS Interface Equivalency Chart

PART NUMBER	POWER	REGISTER LATCH	POLARITY	ENABLE	EQUIVALENT 8-BIT DEVICES	
Back-to-Back Devices						
SN74LS546	LS	Register	Noninvert	Three-state	2	S532
SN74LS547		Latch			2	S531
SN74LS566		Register	Invert		2	S536
SN74LS567		Latch			2	S535
Bidirectional Transceivers						
SN74LS646	LS	Register	Noninvert	Three-state	2 1 4	LS374 LS245 LS157
74ACT646	CMOS					
SN74LS647	LS			Open collector	2 1 4	LS374 LS621 LS157
SN74LS648	LS		Invert	Three-state	2 1 4	LS374 LS640 LS157
74ACT648	CMOS					
SN74LS649	LS			Open collector	2 1 4	LS374 LS622 LS157
SN74LS651	LS	Register	Invert	Three-state	2 1 4	LS374 LS640 LS157
74ACT651	CMOS					
SN74LS652	LS		Noninvert		2 1 4	LS374 LS245 LS157
74ACT652	CMOS					
SN74LS653	LS		Invert	A: Open coll. B: Three-state	2 1 1 4	LS374 LS622 LS640 LS157
SN74LS654	LS		Noninvert		2 1 1 4	LS374 LS621 LS245 LS157
Pipelined Devices						
SN74LS548	LS	Register	Noninvert	Three-state	2 4	LS374 LS157
SN74LS549		Latch			2 4	LS373 LS157
Readback Devices						
SN74LS793	LS	Latch	Noninvert	Three-state	1 1	LS373 LS244
SN74LS794		Register			1 1	LS374 LS244

Block Diagram

Back-To-Back RGTR/Latch XCVR
546, 566/547, 567

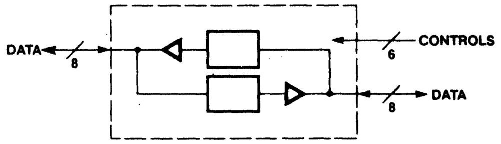

Front-Loading Latches
646/647/648/649

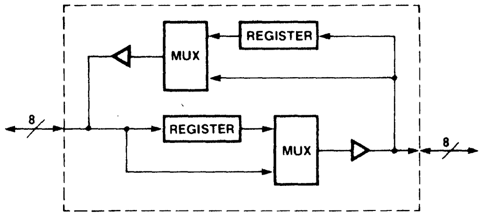

Front-Loading Latches
651/652/653/654

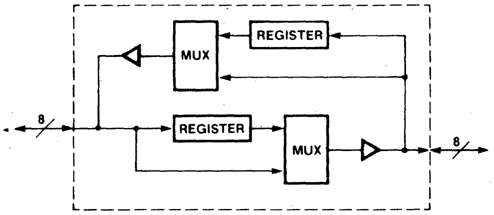

Side-By-Side or Nose-To-Tail RGTR/Latch
548/549

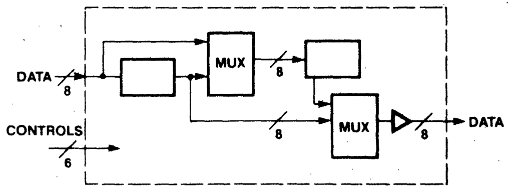

8-Bit Register/Latch with Readback
793/794

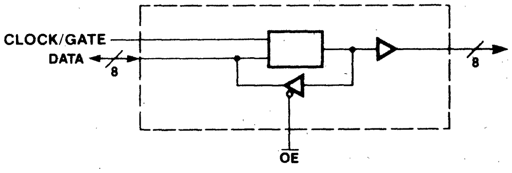

8-Bit Bus Front-Loading-Latch Transceivers

SN54/74LS646 SN54/74LS647
SN54/74LS648 SN54/74LS649

Features/Benefits

- **Bidirectional bus transceivers and registers**
- **Independent registers for A and B buses**
- **Real-time data transfer or stored data transfer**
- **24-pin SKINNYDIP® saves space**
- **8-bit data path matches byte boundaries**
- **Three-state or open-collector outputs drive bus lines**

Ordering Information

PART NUMBER	PKG	TEMP	POLARITY	O/P	POWER
SN54LS646	JS,W,L	Mil	Non-invert	3-state	LS
SN74LS646	NS,JS	Com			
SN54LS647	JS,W,L	Mil		Open-collector	
SN74LS647	NS,JS	Com			
SN54LS648	JS,W,L	Mil	Invert	3-state	
SN74LS648	NS,JS	Com			
SN54LS649	JS,W,L	Mil		Open-collector	
SN74LS649	NS,JS	Com			

NOTE: L package here is L28. The other packages are 24-pin.

Description

The 8-bit bus transceivers with 3-state ('LS646, 'LS648) or open-collector ('LS647, 'LS649) outputs have 16 D-type flip-flops and multiplexers. The bus-oriented pinout of the parts is shown in the Pin Configuration. The internal gate-level hardware configurations for the 'LS646/647 and 'LS648/649 are given in their respective Logic Diagrams. The basic repeated element, consisting of an edge-triggered flip-flop paralleled with a bypassing path or "feed-through" into a two-way mux, is sometimes called a "front-loading latch."

A pair of multiplexers are used to distribute two bytes of data through the part. The data-routing combinations offered by the multiplexers provide flexibility in directing data to or from either bus, and/or either register. Data is loaded into registers A or B upon the rising edge of the appropriate clock signals. CKA clocks register A, which receives data from the B bus directly at its inputs. Similarly, CKB clocks register B, which has the A bus available directly at its inputs. Control of the multiplexers is provided by two select lines (one per register), SRA and SRB. Command of the outputs is performed by enable line $\overline{E}$, and direction line DIR.

When $\overline{E}$ is High data from the buses can be stored into register A and B. When $\overline{E}$ is Low and DIR is High, the direction of operation is from A to B; when $\overline{E}$ and DIR are LOW, the direction of operation is from B to A.

SRA is used to select between register A and the B bus, and then to route the data to a controlled buffer connected to the A bus. Likewise, SRB selects between register B and the A bus, and then routes the data to the B bus through a controlled buffer.

Pin Configuration

'LS646/647/648/649
8-Bit Bus Front-Loading-Latch Transceivers

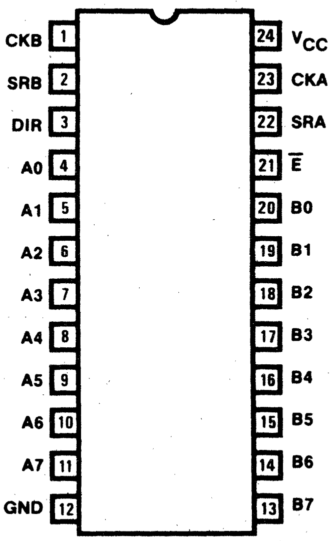

SKINNYDIP® is a registered trademark of Monolithic Memories.

TWX: 910-338-2376
2175 Mission College Blvd. Santa Clara, CA 95054-1592 Tel: (408) 970-9700 TWX: 910-338-2374
Monolithic Memories

8-Bit Bus Front-Loading-Latch Transceivers

SN54/74LS651
SN54/74LS653
SN54/74LS652
SN54/74LS654

Features/Benefits

- **Bidirectional bus transceivers and registers**
- **Independent registers for A and B buses**
- **Real-time data transfer or stored data transfer**
- **Simultaneous outputs on both buses**
- **24-pin SKINNYDIP® saves space**
- **8-bit data path matches byte boundaries**
- **Three-state or open-collector outputs drive bus lines**
- **'LS653/4 are open-collector in A direction, three-state in B direction**

Description

These 8-bit bus transceivers with 3-state ('LS651, 'LS652) or open-collector ('LS653, 'LS654) outputs have 16 D-type flip-flops and multiplexers. The bus-oriented pinout of the parts is shown in the Pin Configuration. The internal gate-level hardware configurations for the 'LS651/653 and 'LS652/654 are given in their respective Logic Diagrams. The basic repeated element, consisting of an edge-triggered flip-flop paralleled with a bypassing path or "feed-through" into a two-way mux, is sometimes called a "front-loading latch."

A pair of multiplexers are used to distribute two bytes of data through the part. The data-routing combinations offered by the multiplexers provide flexibility in directing data to or from either bus, and/or either register. Data is loaded into registers A or B upon the rising edge of the appropriate clock signals. CKA clocks register A, which receives data from the B bus directly at its inputs. Similarly, CKB clocks register B, which has the A bus available directly at its inputs. Control of the multiplexers is provided by two select lines (one per register), SRA and SRB. Command of the outputs is performed by two enable lines, GAB and $\overline{\text{GBA}}$.

When GAB is Low and $\overline{\text{GBA}}$ is High, data from the buses can be loaded into registers A and B. When $\overline{\text{GBA}}$ is Low, the A bus is configured for output. When GAB is High, the B bus is configured for output. The A and B buses can be enabled at the same time, to operate as outputs simultaneously.

SRA is used to select between register A and the B bus, and then to route the data to a controlled buffer connected to the A bus. Likewise, SRB selects between register B and the A bus, and then routes the data to the B bus through a controlled buffer.

Ordering Information

PART NUMBER	PKG	TEMP	POLARITY	OUTPUTS	POWER
SN54LS651	JS,F,L	Mil	Invert	3-state	LS
SN74LS651	NS,JS	Com			
SN54LS652	JS,F,L	Mil	Non-invert		
SN74LS652	NS,JS	Com			
SN54LS653	JS,F,L	Mil	Invert	A bus open-collector; B bus three-state	
SN74LS653	NS,JS	Com			
SN54LS654	JS,F,L	Mil	Non-invert		
SN74LS654	NS,JS	Com			

NOTE: L package here is L28. The other packages are 24-pin.

Pin Configuration

'LS651/652/653/654
8-Bit Bus Front-Loading-Latch Transceivers

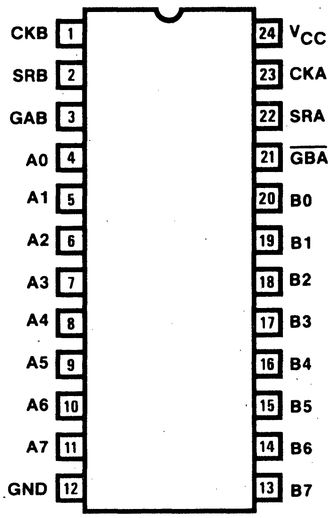

SKINNYDIP® is a registered trademark of Monolithic Memories.

8-Bit Two-Stage Pipelined Register/Latch

SN54/74LS548 SN54/74LS549

Feature/Benefits

- **Two 8-bit high-speed registers/latches**
- **Faster than other LS-TTL registers/latches**
- **Three-state outputs drive bus lines**
- **24-pin SKINNYDIP® saves space**
- **8-bit data path matches byte boundaries**
- **Multiplexer selects either rank at input/output**
- **Output can drive bus directly: I_{OL} 32 mA (com), 24 mA (mil)**
- **Registers/latches configurable for nose-to-tail or side-by-side operation**
- **Individual clock/gate enables for each rank**

Applications

- **Registers for pipelined arithmetic units or digital signal processors**
- **Bus monitor for popular 8-bit microprocessors to restart instructions upon virtual memory page fault**
- **Video display character/attribute pipelined registers**
- **Sequence/state generator for systems: dual-rank registers/latches allow storing a backup previous state for redundancy, or diagnostics**
- **Two-stage buffer for pipelined interfacing input/output**

Description

The 54/74LS548 and 54/74LS549 contain a pair of high-speed 8-bit registers ('LS548) or latches ('LS549) which perform various pipeline storage functions. Two control pins govern a pair of internal multiplexers, as shown in the block diagrams; using these, several useful data paths can be configured. The input selection multiplexer determines the source of data to the second register/latch, as controlled by the INSEL line. In this way, data from either the D7-D0 inputs, or the outputs of the first register/latch, are stored in the second register/latch. The output selection multiplexer determines the source of data that will be sent to the outputs Y7-Y0. This multiplexer is controlled by the OUTSEL line, and allows either the first or second register/latch data to be output. The outputs are fully buffered, provide high-drive current, and allow three-state control through the $\overline{OE}$ line.

The arrangement of registers/latches within the 'LS548/'LS549 can be thought of a two 8-bit storage ranks, rank 1 and rank 2. The 'LS548 has a common clock line CK, and separate clock enables $\overline{CKE1}$ and $\overline{CKE2}$ for rank 1 and rank 2 respectively. In contrast, the 'LS549 operates as a flow-through latch, and has separate latch enables $\overline{G1}$ and $\overline{G2}$ for each rank, as well as a common latch-enable input G.

Ordering Information

PART NUMBER	PKG	TEMP	TYPE	POWER
SN54LS548	JS,F,L	Mil	Register	LS
SN74LS548	NS,JS	Com		
SN54LS549	JS,F,L	Mil	Latch	
SN74LS549	NS,JS	Com		

* NOTE: L package here is L28. The other packages are 24-pin.

In the 'LS548, data present at the D7-D0 inputs are stored in rank 1 on the positive edge of CK, if $\overline{CKE1}$ has been previously asserted. Data for rank 2 are stored similarly, if $\overline{CKE2}$ is asserted prior to the clock. In the 'LS549, data pass through the latches when the latch controls ($\overline{G1}$ or $\overline{G2}$) for either rank are enabled simultaneously with the common latch enable G. Data remain in a rank when the latch controls are disabled, or 'unasserted'.

The clock/gate control lines are used with the INSEL and OUTSEL controls for flexible data storage and movement operations. Two representative examples are shown in Figure 1 (a) and 1 (b). The first example is a classical 2-stage pipelined register, or 'nose-to-tail' configuration. Data at D7-D0 are first stored in rank 1, then stored in rank 2 on the next clock/gate. If the clock/gate enable for either rank becomes unasserted, then the previously-stored data are simply retained. In the second example, data at D7-D0 are stored in either or both ranks if the respective clock/gate enable signals are asserted. In this 'side-by-side' configuration, data sent to the Y7-Y0 outputs are selected from either rank 1 or rank 2, under control of the OUTSEL line.

Pin Configuration

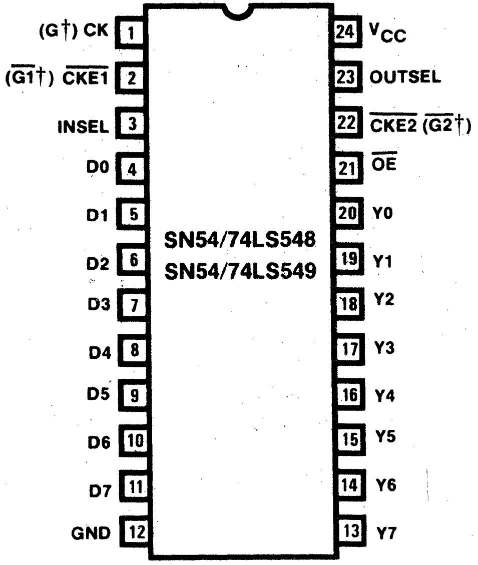

† For SN54/74LS549.

SKINNYDIP® is a registered trademark of Monolithic Memories

8-Bit Latch/Register with Readback

SN54/74LS793 SN54/74LS794

Features/Benefits

- **I/O port configuration enables output data back onto input bus**
- **20-pin SKINNYDIP® saves space**
- **8-bit data path matches byte boundaries**
- **Ideal for microprocessor interface**

Description

These 8-bit latches/registers are useful for I/O operations on a microprocessor bus. An image of the output data can be read back by the CPU. This operation is important in control algorithms which make decisions based on the previous status of output controls. Rather than storing a redundant copy of the output data in memory, simply reading the register as an I/O port allows the data to be retrieved from where it has been stored in an 'LS793/4, for verification and/or updating.

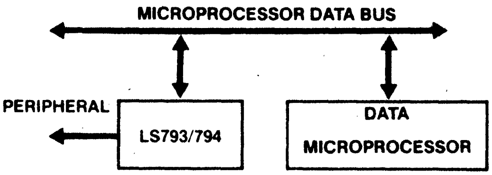
MICROPROCESSOR DATA BUS
PERIPHERAL
LS793/794
DATA
MICROPROCESSOR

The data is loaded in the registers on the low-to-high transition of the clock (CK), for the 'LS794. The data is passed through the 'LS793 when the gate, (G), is High, and it is "latched" when G changes to Low. The output enable, $\overline{OE}$ is used to enable data on D7-D0. When $\overline{OE}$ is low the output of the latches/registers is enabled on D0-D7, enabling D as an output bus so that the host can perform a read operation. When $\overline{OE}$ is High, D7-D0 are inputs to the latches/registers configuring D as an input bus.

The output drive of these commercial parts for any output pin is I_{OL} = 24 mA. They are available in the popular 20-pin SKINNYDIP® package.

'LS793 Function Table

G	$\overline{OE}$	Q	D
L	L	Q_0**	Output, Q
L	H	Q_0**	Input
H†	L	D*	Output, Q*
H	H	D	Input

* In this case the output of the latch feeds the input, and a "race" condition results.

** Q_0 represents the previous "latched" state.

† This transition is not a normal mode of operation and may produce hazards.

Ordering Information

PART NUMBER	PKG	TEMP	POLARITY	TYPE	POWER
SN54LS793 SN74LS793	J,W,L N,J	Mil Com	Non-invert	Latch	LS
SN54LS794 SN74LS794	J,W,L N,J	Mil Com		Register	

W (Cerpak), D (Side-brazed ceramic dual-in-line) packages are also available for both parts.

Logic Symbols

'LS793

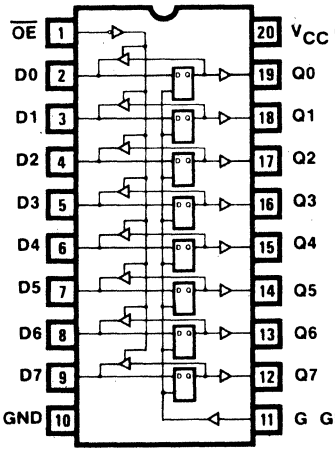
$\overline{OE}$ 1
D0 2
D1 3
D2 4
D3 5
D4 6
D5 7
D6 8
D7 9
GND 10
20 V_{CC}
19 Q0
18 Q1
17 Q2
16 Q3
15 Q4
14 Q5
13 Q6
12 Q7
11 G

'LS794

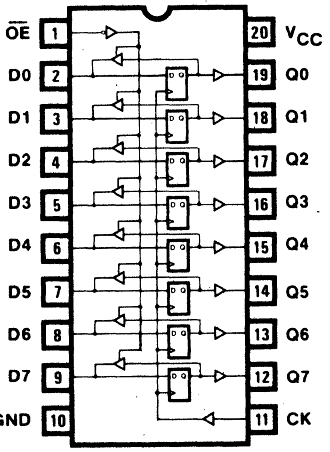
$\overline{OE}$ 1
D0 2
D1 3
D2 4
D3 5
D4 6
D5 7
D6 8
D7 9
GND 10
20 V_{CC}
19 Q0
18 Q1
17 Q2
16 Q3
15 Q4
14 Q5
13 Q6
12 Q7
11 CK

'LS794 Function Table

CK	$\overline{OE}$	Q	D
L or H or ↓	L	Q_0	Output, Q
L or H or ↓	H	Q_0	Input
↑	L	Q_0	Output, Q*
↑	H	D	Input

* In this case the output of the register is clocked to the inputs and the overall Q output is unchanged at Q_0.

SKINNYDIP® is a registered trademark of Monolithic Memories.

8-Bit Bus Front-Loading Latch Transceivers — Advanced CMOS-TTL Compatible

54/74ACT646 54/74ACT648

Features/Benefits

- Bidirectional bus transceiver and register
- Independent registers for A and B buses
- Real-time data transfer or stored data transfer
- 24-pin SKINNYDIP® saves space
- Three-state outputs drive bus lines
- Low quiescent supply current of <10 μA (typical)
- Active supply current at about 20% LS equivalent
- Wide commercial operating supply and temperature ranges 4.5 V to 5.5 V; -40°C to +85°C

Ordering Information

PART NUMBER	PKG	TEMP	POLARITY	OUTPUT	TECH
54ACT646	JS,W, L28	Mil	Non-invert	3-state	CMOS
74ACT646	NS,JS	Com			
54ACT648	JS,W, L28	Mil	Invert		
74ACT648	NS,JS	Com			

Description

This 8-bit bus transceiver with three-state outputs has sixteen D-type flip-flops and multiplexers. The bus-oriented pinout of the part is shown in the Pin Configuration. The internal gate-level hardware configurations for the 'ACT646/648 are given in the Logic Diagram. The basic repeated element, consisting of an edge-triggered flip-flop paralleled with a bypassing path, or "feed-through", into a two-way multiplexer is sometimes called a "front-loading latch."

A pair of multiplexers are used to distribute two bytes of data through the part. The data-routing combinations offered by the multiplexers provide flexibility in directing data to or from either bus, and/or either register. Data is loaded into registers A or B upon the rising edge of the appropriate clock signals. CKA clocks register A, which receives data from the B bus directly at its inputs. Similarly, CKB clocks register B, which has the A bus available directly at its inputs. Control of the multiplexers is provided by two select lines (one per register), SRA and SRB. Command of the outputs is performed by enable line $\overline{E}$, and direction line DIR.

When $\overline{E}$ is High, data from the buses can be stored into register A and B. When $\overline{E}$ is Low and DIR is High, the direction of operation is from A to B, when $\overline{E}$ and DIR are Low, the direction of operation is from B to A.

SRA is used to select between register A and the B bus, and then to route the data to a controlled buffer connected to the A bus. Likewise, SRB selects between register B and the A bus, and then routes the data to the B bus through a controlled buffer.

Pin Configuration

'ACT646/648
8-Bit Bus Front-Loading Latch Transceiver

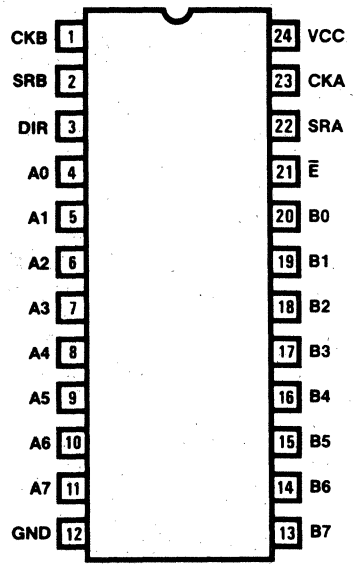

SKINNYDIP® is a registered trademark of Monolithic Memories.

TWX: 910-338-2376
2175 Mission College Blvd. Santa Clara, CA 95054-1592 Tel: (408) 970-9700 TWX: 910-338-2374
Monolithic Memories

8-Bit Bus Front-Loading Latch Transceivers — Advanced CMOS-TTL Compatible

54/74ACT651 54/74ACT652

Features/Benefits

- Bidirectional bus transceiver and register
- Independent registers for A and B buses
- Real-time data transfer or stored data transfer
- Simultaneous outputs on both buses
- 24-pin SKINNYDIP® saves space
- Three-state outputs drive bus lines
- Low quiescent supply current of <10 μA (typical)
- Active supply current at about 20% LS equivalent
- Wide commercial operating supply and temperature ranges 4.5 V to 5.5 V; -40°C to +85°C

Ordering Information

PART NUMBER	PKG	TEMP	POLARITY	OUTPUT	TECH
54ACT651	JS,W, L28	Mil	Invert	3-state	CMOS
74ACT651	NS,JS	Com			
54ACT652	JS,W, L28	Mil	Non-invert		
74ACT652	NS,JS	Com			

Description

This 8-bit bus transceiver with three-state outputs has sixteen D-type flip-flops and multiplexers. The bus-oriented pinout of the part is shown in the Pin Configuration. The internal gate-level hardware configurations for the 'ACT651/652 are given in the Logic Diagrams. The basic repeated element, consisting of an edge-triggered flip-flop paralleled with a bypassing path, or "feed-through", into a two-way multiplexer is sometimes called a "front-loading latch."

A pair of multiplexers are used to distribute two bytes of data through the part. The data-routing combinations offered by the multiplexers provide flexibility in directing data to or from either bus, and/or either register. Data is loaded into registers A or B upon the rising edge of the appropriate clock signals. CKA clocks register A, which receives data from the B bus directly at its inputs. Similarly, CKB clocks register B, which has the A bus available directly at its inputs. Control of the multiplexers is provided by two select lines (one per register), SRA and SRB. Command of the outputs is performed by two enable lines, GAB and $\overline{\text{GBA}}$.

When GAB is low and $\overline{\text{GBA}}$ is high, data from the buses can be loaded into registers A and B. When $\overline{\text{GBA}}$ is low, the A bus is configured for output. When GAB is high, the B bus is configured for output. The A and B buses can be enabled at the same time, to operate as outputs simultaneously.

SRA is used to select between register A and the B bus, and then to route the data to a controlled buffer connected to the A bus. Likewise, SRB selects between register B and the A bus, and then routes the data to the B bus through a controlled buffer.

Pin Configuration

'ACT651/652

8-Bit Bus Front-Loading Latch Transceiver

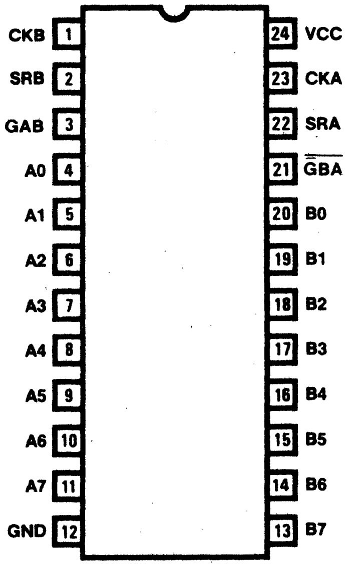

SKINNYDIP® is a registered trademark of Monolithic Memories.

Asynchronous First-In First-Out Memory (FIFO) 16x5
74S225/A

Features/Benefits

- DC to 20-MHz shift-in/shift-out rates
- Fully expandable by word width and depth
- Three-state outputs
- TTL-compatible inputs and outputs
- Functionally compatible with T.I. SN74S225
- Designed for extended testability

Description

The 74S225/A is a Schottky-clamped transistor-transistor logic (STTL) 16x5 First-In-First-Out memory (FIFO) which operates from DC to 10/20 MHz. The data is loaded and emptied on a first-in-first-out basis through asynchronous input and output ports. These devices are used in digital systems performing data transfers when source and receiver are not operating at the same data rate. FIFOs are also used as data buffers where the source and receiver are not operating at the same time. Both word length and FIFO depth are expandable. Unload clock output (Pin 3) is designed for testability of V_{OL}.

Ordering Information

PART NUMBER	PACKAGE	TEMPERATURE
74S225	J, N	10 MHz Com
74S225A	J, N	20 MHz Com

Pin Names

PIN #	PIN NAME	DESCRIPTION
1	CLK A	Load clock A
2	IR	Input ready
3	UNCK OUT	Unload clock output
4-8	D0-D4	Data inputs
9	$\overline{\text{OE}}$	Output enable
10	GND	Ground pin
11-15	Q4-Q0	Data outputs
16	UNCLK IN	Unload clock input
17	OR	Output ready
18	$\overline{\text{CLR}}$	Clear
19	CLK B	Load clock B
20	V_{CC}	Supply voltage

Pin Configuration

74S225/A . . J or N Package
(Top View)

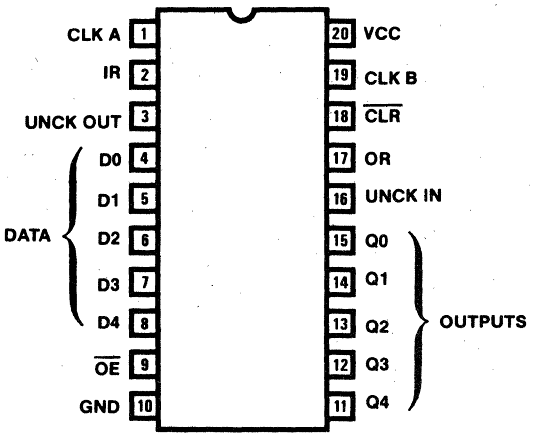
CLK A 1
IR 2
UNCK OUT 3
DATA
D0 4
D1 5
D2 6
D3 7
D4 8
OE 9
GND 10
20 VCC
19 CLK B
18 CLR
17 OR
16 UNCK IN
15 Q0
14 Q1
13 Q2
12 Q3
11 Q4
OUTPUTS

Block Diagram

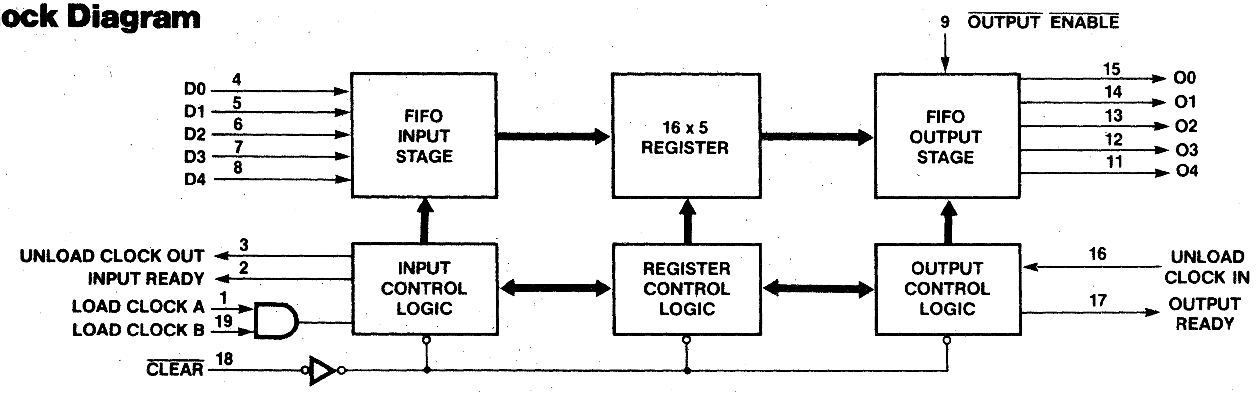
9 OUTPUT ENABLE
D0 4
D1 5
D2 6
D3 7
D4 8
FIFO INPUT STAGE
16 x 5 REGISTER
FIFO OUTPUT STAGE
15 O0
14 O1
13 O2
12 O3
11 O4
UNLOAD CLOCK OUT 3
INPUT READY 2
LOAD CLOCK A 1
LOAD CLOCK B 19
CLEAR 18
INPUT CONTROL LOGIC
REGISTER CONTROL LOGIC
OUTPUT CONTROL LOGIC
16 UNLOAD CLOCK IN
17 OUTPUT READY

First-In First-Out (FIFO) 64x4 64x5 Cascadable Memory

C5/67401 C5/67401A C67401B
C5/67402 C5/67402A C67402B

Features/Benefits

- Choice of 16.7, 15 and 10 MHz shift-out/shift-in rates
- Choice of 4-bit or 5-bit data width
- TTL inputs and outputs
- Readily expandable in the word and bit dimensions
- Structured pinouts. Output pins directly opposite corresponding input pins
- Asynchronous operation
- Pin-compatible with Fairchild's F3341 MOS FIFO and many times faster

Description

The C5/C67401B/2B/1A/2A/1/2 are "fall-through" high speed First-In First-Out (FIFO) memory organized 64 words by 4 bits and 64 words by 5 bits respectively. A 16.7 MHz data rate allows usage in digital video systems; a 15 MHz data rate allows usage in high speed tape or disc controllers and communications buffer applications. Both word length and FIFO depth are expandable.

Ordering Information

PART NUMBER	PKG	TEMP	DESCRIPTION
C57401	J,W(20)(L)	Mil	7 MHz 64x4 FIFO
C67401	J,N	Com	10 MHz 64x4 FIFO
C57402	J,W(20)(L)	Mil	7 MHz 64x5 FIFO
C67402	J,N	Com	10 MHz 64x5 FIFO
C57401A	J,W(20)(L)	Mil	10 MHz 64x4 FIFO
C67401A	J,N	Com	15 MHz 64x4 FIFO
C57402A	J,W(20)(L)	Mil	10 MHz 64x5 FIFO
C67402A	J,N	Com	15 MHz 64x5 FIFO
C67401B	J	Com	16.7 MHz 64x4 FIFO
C67402B	J	Com	16.7 MHz 64x5 FIFO

Block Diagrams

C57401/A 64x4
C67401A/B 64x4

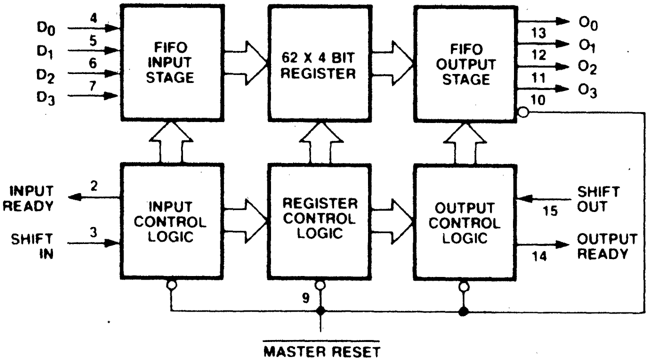

D_0 4
D_1 5
D_2 6
D_3 7
FIFO INPUT STAGE
62 X 4 BIT REGISTER
FIFO OUTPUT STAGE
13 O_0
12 O_1
11 O_2
10 O_3
INPUT READY 2
SHIFT IN 3
INPUT CONTROL LOGIC
REGISTER CONTROL LOGIC
OUTPUT CONTROL LOGIC
SHIFT OUT 15
OUTPUT READY 14
9
MASTER RESET

C57402/A 64x5
C67402A/B 64x5

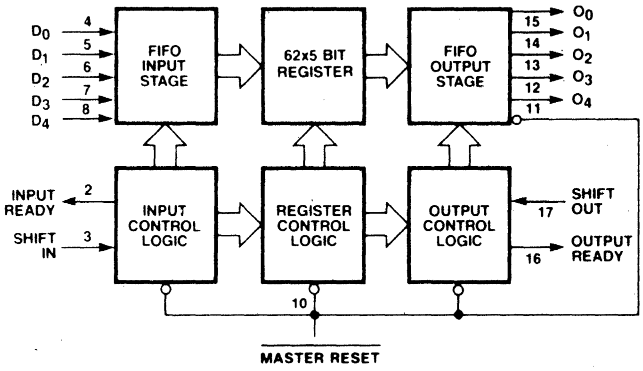

D_0 4
D_1 5
D_2 6
D_3 7
D_4 8
FIFO INPUT STAGE
62x5 BIT REGISTER
FIFO OUTPUT STAGE
15 O_0
14 O_1
13 O_2
12 O_3
11 O_4
INPUT READY 2
SHIFT IN 3
INPUT CONTROL LOGIC
REGISTER CONTROL LOGIC
OUTPUT CONTROL LOGIC
SHIFT OUT 17
OUTPUT READY 16
10
MASTER RESET

Pin Configurations

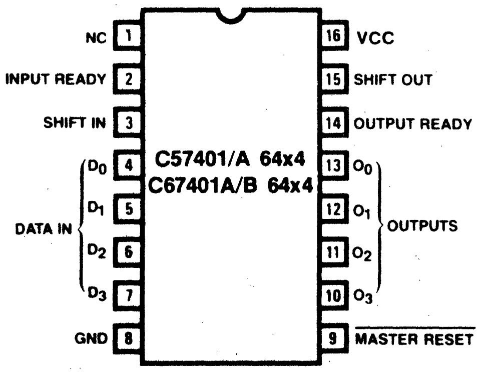

NC 1
INPUT READY 2
SHIFT IN 3
D_0 4
D_1 5
D_2 6
D_3 7
DATA IN
GND 8
16 VCC
15 SHIFT OUT
14 OUTPUT READY
13 O_0
12 O_1
11 O_2
10 O_3
OUTPUTS
9 MASTER RESET
C57401/A 64x4
C67401A/B 64x4

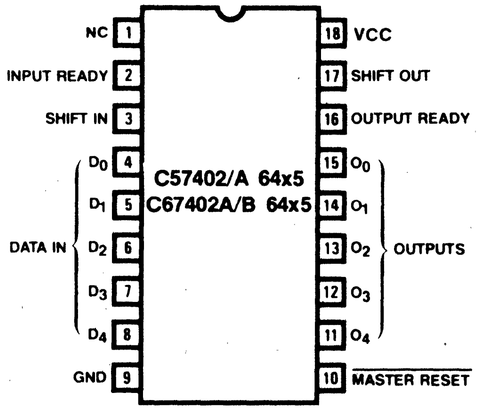

NC 1
INPUT READY 2
SHIFT IN 3
D_0 4
D_1 5
D_2 6
D_3 7
D_4 8
DATA IN
GND 9
18 VCC
17 SHIFT OUT
16 OUTPUT READY
15 O_0
14 O_1
13 O_2
12 O_3
11 O_4
OUTPUTS
10 MASTER RESET
C57402/A 64x5
C67402A/B 64x5

TWX: 910-338-2376
2175 Mission College Blvd. Santa Clara, CA 95054-1592 Tel: (408) 970-9700 TWX: 910-338-2374
Monolithic Memories

First-In First-Out (FIFO) 64x5 Memory 35 MHz (Standalone)

57413A 67413A 67413

Features/Benefits

- High-speed 35 MHz shift-in/shift-out rates
- High-drive capability
- Three-state outputs
- Half-full and Almost-full/Empty status flags
- Structured pinouts. Output pins directly opposite corresponding input pins.
- Asynchronous operation
- TTL-compatible inputs and outputs

Description

The 5/67413A, 67413 are high-speed, 64x5 First-In-First-Out memories (FIFOs) which operate at 35-MHz input/output rates (67413 operates at 25-MHz in-out). The data is loaded and emptied on a first-in-first-out basis. It is a three-state device with high-drive (I_{OL} = 24 mA) data outputs. These devices can be connected in parallel to give FIFOs of any word length. It has a Half-full flag (thirty-two or more words full) and an almost full/empty flag (fifty-six or more words or eight or less words). The main applications of 5/67413A, 67413 are rate buffers; sourcing and absorbing data at different rates. Other applications are high-speed tape and disk controllers, data communications systems and plotter control systems.

Ordering Information

PART NUMBER	PKG	TEMP	DESCRIPTION
57413A	J,W(L28)	Mil	25 MHz-in/out
67413A	J	Com	35 MHz-in/out
57413	J	Com	25 MHz-in/out

Pin Configuration

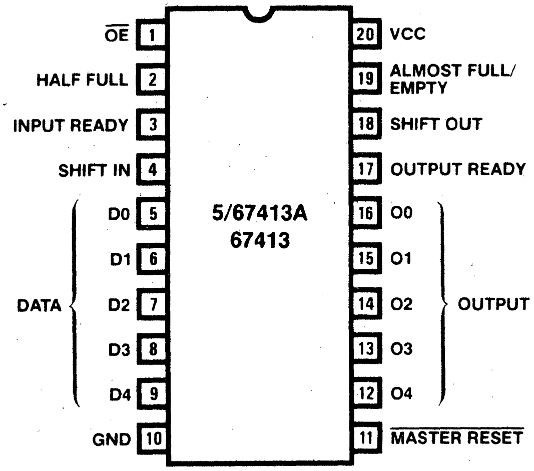
$\overline{OE}$ 1
HALF FULL 2
INPUT READY 3
SHIFT IN 4
D0 5
D1 6
D2 7
D3 8
D4 9
DATA
GND 10
5/67413A
67413
20 VCC
19 ALMOST FULL/ EMPTY
18 SHIFT OUT
17 OUTPUT READY
16 O0
15 O1
14 O2
13 O3
12 O4
OUTPUT
11 $\overline{MASTER\ RESET}$

Block Diagram

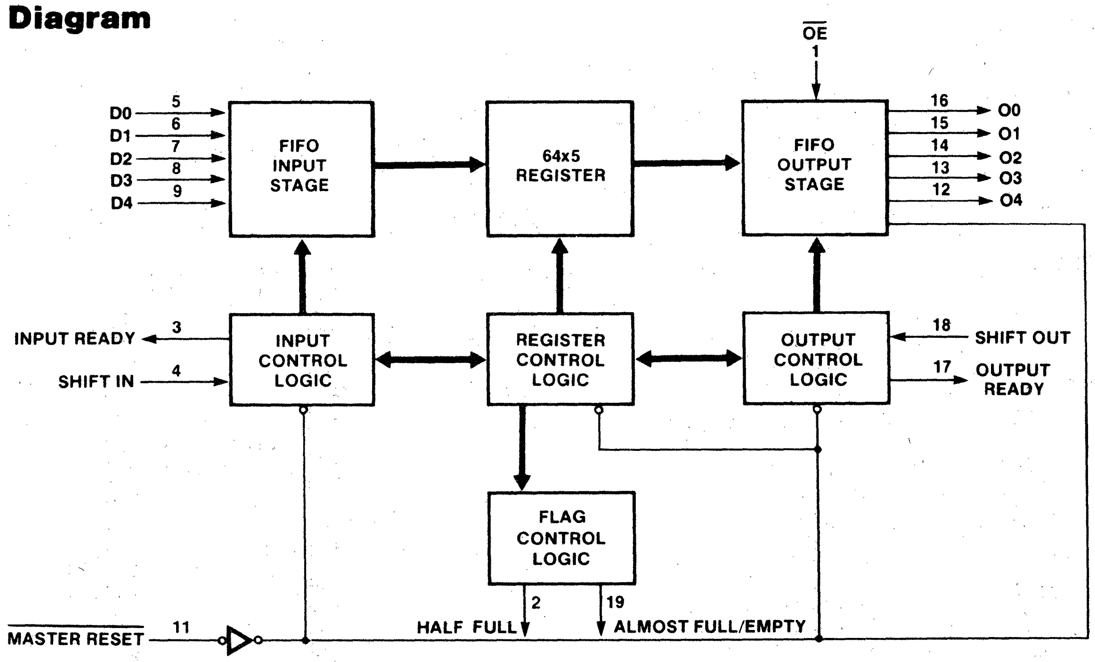
$\overline{OE}$
1
D0 5
D1 6
D2 7
D3 8
D4 9
FIFO INPUT STAGE
64x5 REGISTER
FIFO OUTPUT STAGE
16 O0
15 O1
14 O2
13 O3
12 O4
INPUT READY 3
SHIFT IN 4
INPUT CONTROL LOGIC
REGISTER CONTROL LOGIC
OUTPUT CONTROL LOGIC
18 SHIFT OUT
17 OUTPUT READY
FLAG CONTROL LOGIC
$\overline{MASTER\ RESET}$ 11
2 HALF FULL
19 ALMOST FULL/EMPTY

TWX: 910-338-2376
2175 Mission College Blvd. Santa Clara, CA 95054-1592 Tel: (408) 970-9700 TWX: 910-338-2374
Monolithic Memories

Serializing First-In-First-Out (FIFO) 64x8/9 Memory

67417

Features/Benefits

- **High-speed 28-MHz serial shift-in/shift-out rate**
- **10-MHz parallel shift-in/shift-out rate**
- **Three-state outputs with Hi-current drive**
- **Cascadable at parallel port only**
- **Half-full flag (32 or more)**
- **Selectable 64x8 or 64x9 FIFO configuration thus providing "frame mark bit"**

Typical Applications

- **LAN equipment**
- **Data communication**
- **Office automation**
- **Microcomputers**
- **Minicomputers**
- **Disk/tape controllers**

Description

The 67417 is a serializing/deserializing FIFO. This FIFO, the first one of its type in the industry, is organized 64 words x 8/9 bits wide. Like traditional Monolithic Memories' FIFOs it is cascadable, but only at the parallel port.

Ordering Information

PART NUMBER	PACKAGE	TEMPERATURE	DESCRIPTION
67417	J	Com	64x9

In addition, the device has the ability to connect directly to a system bus. These features make it a complete "sub-system on a chip."

The FIFO basically has three modes of operation;

1. Serial in to parallel out
2. Parallel in to serial out
3. Serial in to serial out (requires non-standard logic level on PDIR).

In the first mode, serial data can be accepted at up to 28 MHz and the FIFO outputs parallel data at up to 10 MHz. Similarly, in the alternate mode parallel data can be transformed into serial data. Please refer to appendix for detailed description.

Pin Configuration

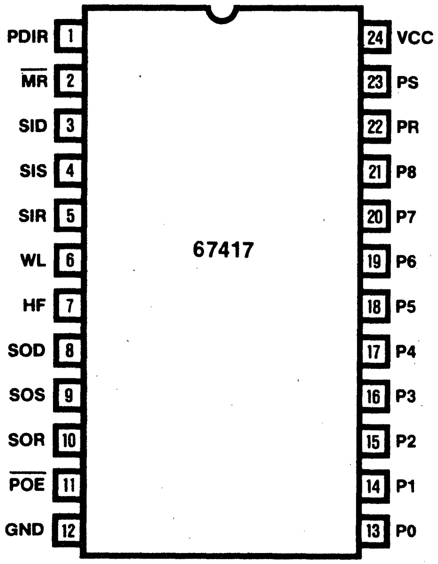

Pin Names

P0-P8	Parallel Data
PS	Parallel Shift In/Out
PR	Parallel Input/Output Ready
$\overline{POE}$	Parallel Output Enable
SID	Serial Input Data
SIS	Serial Input Shift
SIR	Serial Input Ready
SOD	Serial Output Data
SOS	Serial Output Shift
SOR	Serial Output Ready
PDIR	Parallel Port Direction
WL	Word Length
$\overline{MR}$	Master Reset
HF	Half Full Flag
VCC	VCC
GND	Ground

NOTE: Please call Monolithic Memories for introduction dates.

TWX: 910-338-2376
2175 Mission College Blvd. Santa Clara, CA 95054-1592 Tel: (408) 970-9700 TWX: 910-338-2374

Monolithic Memories

FIFO RAM Controller
674219

Features/Benefits

- **High-speed, no fall-through time**
- **Deep FIFOs — 16-bit SRAM address**
- **Arbitration read/write**
- **Control signals for data latching**
- **Full, Half-Full, Empty, Almost flags for any buffer size from 512 to 64K**
- **Three-state outputs**

Applications

- **LAN equipment**
- **Data communication**
- **Disk/tape controllers**
- **Host-to-dedicated-processor interface**

Pin Configuration

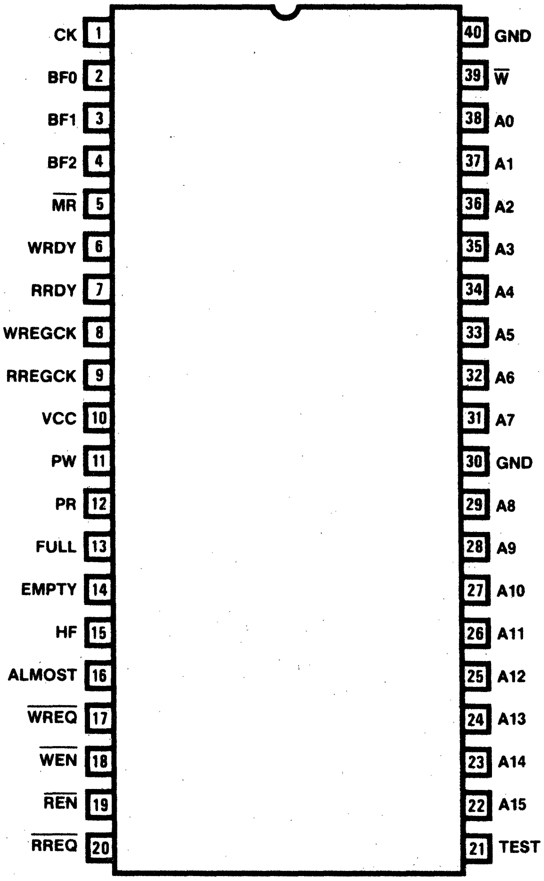
CK 1
BF0 2
BF1 3
BF2 4
$\overline{MR}$ 5
WRDY 6
RRDY 7
WREGCK 8
RREGCK 9
VCC 10
PW 11
PR 12
FULL 13
EMPTY 14
HF 15
ALMOST 16
$\overline{WREQ}$ 17
$\overline{WEN}$ 18
$\overline{REN}$ 19
$\overline{RREQ}$ 20
40 GND
39 $\overline{W}$
38 A0
37 A1
36 A2
35 A3
34 A4
33 A5
32 A6
31 A7
30 GND
29 A8
28 A9
27 A10
26 A11
25 A12
24 A13
23 A14
22 A15
21 TEST

Ordering Information

PART NUMBER	PACKAGE		TEMP.
	PINS	TYPE	
674219	40	J	Com

Description

The 674219 FIFO RAM Controller provides addressing control, status, and arbitration for a static RAM array used as a First-In-First-Out (FIFO) buffer. The sixteen address lines can address a FIFO buffer area ranging from 512 to 65,536 static RAM words. Control signals include $\overline{W}$ (the write enable signal for the static RAMs), handshaking signals for the read and write ports, and strobes for external data latching.

Block Diagram

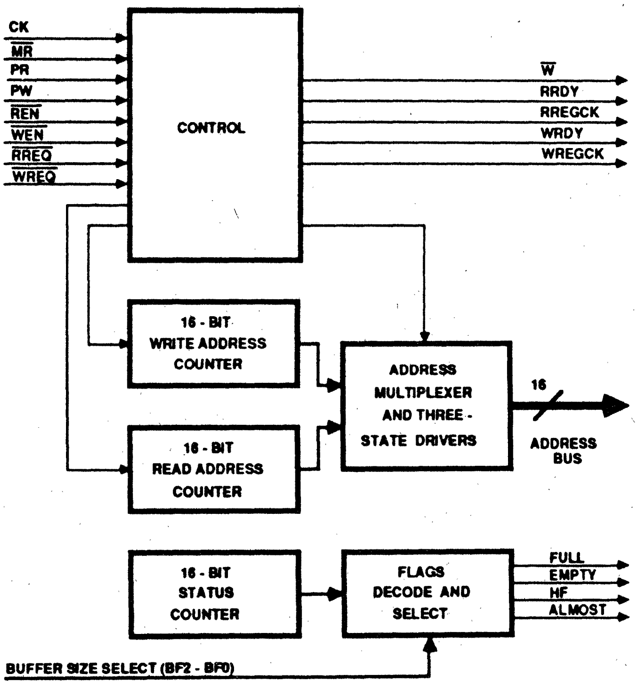
CK
$\overline{MR}$
$\overline{PR}$
$\overline{PW}$
$\overline{REN}$
$\overline{WEN}$
$\overline{RREQ}$
$\overline{WREQ}$
CONTROL
$\overline{W}$
RRDY
RREGCK
WRDY
WREGCK
16-BIT WRITE ADDRESS COUNTER
16-BIT READ ADDRESS COUNTER
ADDRESS MULTIPLEXER AND THREE-STATE DRIVERS
16
ADDRESS BUS
16-BIT STATUS COUNTER
FLAGS DECODE AND SELECT
FULL
EMPTY
HF
ALMOST
BUFFER SIZE SELECT (BF2 - BF0)

16x16 Flow-Thru™ Multiplier Slice 54/74S556

Features/Benefits

- **Twos-complement, unsigned, or mixed operands**
- **Full 32-bit product immediately available on each cycle**
- **High-speed 16x16 parallel multiplier**
- **Latched or transparent inputs/outputs**
- **Three-state output controls, independent for each half of the product**
- **Single +5 V supply (via multiple pins)**
- **Available in 84-terminal Leadless-Chip Carrier and 88-Pin-Grid-Array packages**

Description

The 'S556 is a high-speed 16x16 combinatorial multiplier which can multiply two 16-bit unsigned or signed twos-complement numbers on every cycle. Each operand X and Y has an associated mode-control line, XM and YM respectively. When a mode-control line is at a LOW logic level, the operand is treated as an unsigned 16-bit number; when the mode-control line is at a HIGH logic level, the operand is treated as a 16-bit signed twos-complement number. Additional inputs RS and RU allow the addition of a bit into the multiplier array at the appropriate bit positions for rounding. The entire 32-bit double-length product is available at the outputs at one time.

Ordering Information

PART NUMBER	PACKAGE	TEMPERATURE
54S556	P88, L84*	Military
74S556	P88, L84*	Commercial

P88 is an 88-Pin-Grid-Array Package.

L84 is an 84-terminal Leadless-Chip Carrier Package.

* The 84-terminal leadless chip carrier, L84, and its socket, L84-2, are in development; contact the factory for further details.

The most-significant product bit, S31, is available in both true and complemented form to simplify longer-wordlength multiplications. The product outputs are three-state, controlled by assertive-low enables. The MSP outputs are controlled by the TRIM ($\overline{OEM}$) control input, while the LSP outputs are controlled by the TRIL ($\overline{OEL}$) control input. This allows one or more multipliers to be connected to a parallel bus or to be used in a pipelined system.

All inputs and outputs have transparent latches. The latches become transparent when the input to the corresponding gate control line GX, GY, GM, GL is HIGH. If latches are not required, these control inputs may be tied HIGH, leaving the multiplier fully transparent for combinatorial cascading. The device uses a single +5 V power supply, and is available both in an 84-terminal leadless chip carrier (LCC) package and in an 88-pin-grid-array package.

'S556 Logic Diagram

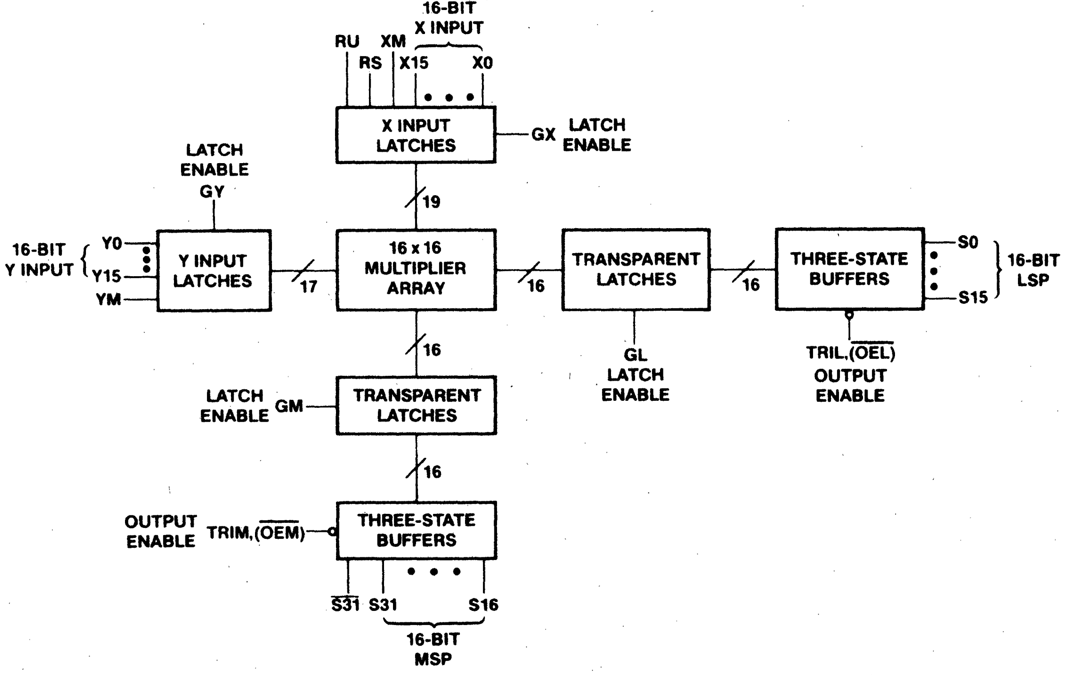
16-BIT
X INPUT
RU
XM
RS
X15
X0
X INPUT LATCHES
GX
LATCH ENABLE
LATCH ENABLE GY
19
16-BIT Y INPUT
Y0
Y15
YM
Y INPUT LATCHES
17
16 x 16 MULTIPLIER ARRAY
16
TRANSPARENT LATCHES
16
THREE-STATE BUFFERS
S0
S15
16-BIT LSP
GL LATCH ENABLE
TRIL,($\overline{OEL}$) OUTPUT ENABLE
16
LATCH ENABLE
GM
TRANSPARENT LATCHES
16
OUTPUT ENABLE
TRIM,($\overline{OEM}$)
THREE-STATE BUFFERS
$\overline{S31}$
S31
S16
16-BIT MSP

Flow Thru™ is a trademark of Monolithic Memories

Standard Logic Products

LSTTL:	SN54/74LS Series	**MECL10K:**	MC10000 Series	**Standard CMOS:**	MC14000 Series
FAST™:	MC54/74F Series	**MECL10KH:**	MC10H000 Series	**High-Speed CMOS:**	MC54/74HC Series
		MECL III:	MC1600 Series		

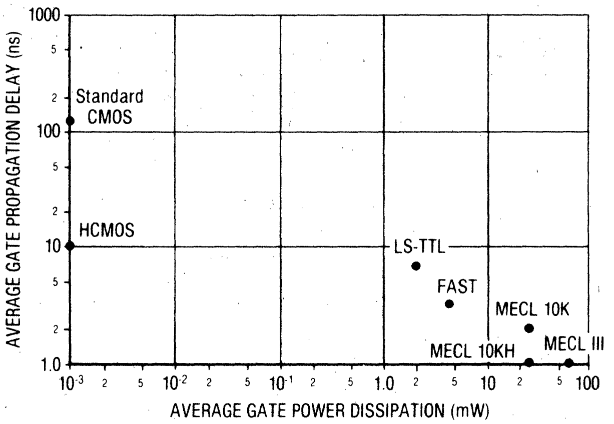

Graph 1 — General Comparison of Speed/ Power Characteristics

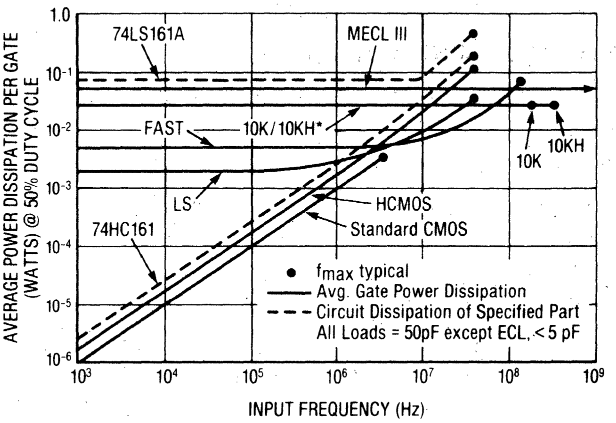

Graph 2 — Variations In Power Dissipation as a Function of Operating Frequency

The variety of established and newly introduced logic families challenges the system designer with choosing the best available technology for each design. Each family offers distinct advantages and limitations.

The three most often used characteristics for determining family selection are propagation delay, operating frequency, and power consumption. For Motorola logic families, these characteristics are displayed and compared in the graphs above. Graph 1 illustrates the tradeoffs between power dissipation and propagation delay at low operating frequencies. As frequency increases, the changes in power dissipation characteristics of the various families vary considerably, graph 2. These factors, plus the ever-changing impact of economics, must be considered in the selection of the most suitable logic line.

INTRA-FAMILY RELATIONSHIPS

Schottky TTL

For many years, Transistor-Transistor Logic (TTL), specifically the 54/74 TTL series, has been the dominant logic family for general-purpose applications. Within the last few years, low-power Schottky (LSTTL) has taken over, replacing the original 7400 series with lower power and higher speed. The latest in this progressive logic series are the Advanced Low-Power Schottky (ALSTTL) family and the FAST™ Schottky TTL series.

The **Low Power Schottky (LSTTL)** family combines a current and power reduction improvement over standard 7400 TTL by a factor of 5. This is accomplished by advanced processing and by using Schottky diode clamping to prevent saturation.

The **FAST Schottky TTL** family provides a 75–80% power reduction compared to standard Schottky (54/74S) TTL and yet offers a 20–40% improvement in circuit performance over the standard Schottky due to the MOSAIC process. Also, FAST circuits contain additional circuitry to provide a flatter power/frequency curve. The input configuration of FAST uses a lower input current which translates into higher fanout.

Speed/Power comparisons between these three families are as follows:

SPEED/POWER CHARACTERISTICS FOR SCHOTTKY TTL LOGIC

(ALL TYPICAL RATINGS)

Characteristic	**Symbol**	**LS**	**FAST**	**Units**
Quiescent Supply Current/Gate	I_G	0.4	1.1	mA
Power/Gate (Quiescent)	P_G	2.0	5.5	mW
Propagation Delay	t_p	9.0	3.7	ns
Speed Power Product	—	18	19.2	pJ
Clock Frequency (D-F/F)	f_{max}	33	125	MHz
Clock Frequency (Counter)	f_{max}	40	125	MHz

MECL (ECL)

Motorola's Emitter Coupled Logic (MECL) is a nonsaturating form of digital logic which eliminates transistor storage time as a speed limiting characteristic, permitting very high speed operation.

Motorola offers three versions of MECL: MECL 10K, MECL 10KH, and MECL III.

The *MECL 10K* series has become the industry standard for high-speed applications. In order to make the circuits comparatively easy to use, edge speed was slowed to 2.0 ns while the important propagation delay was held to 2.0 ns. The slow edge speed permits use of wire-wrap and standard printed circuit lines; however, the circuits are specified to drive transmission lines for optimum performance.

The newer *MECL 10KH* family features 100% improvement in propagation delay and clock speeds while maintaining power supply current equal to MECL 10K. This new MECL family is voltage compensated which allows guaranteed dc and switching parameters over a ±5% power supply range. Noise margins of MECL 10KH are 75% better than the MECL 10K series. MECL 10KH is compatible with MECL 10K and MECL III, a key element in allowing users to enhance existing systems by increasing the speed in critical timing areas.

MECL III, with its 1 ns gate propagation delays and greater than 1 GHz flip-flop toggle rates, remains the industry speed leader. The 1 ns rise and fall times require a transmission line environment for all but the smallest systems. For this reason, all circuit outputs are designed to drive transmission lines and all output logic levels are specified when driving 50-ohm loads. Because of MECL III's fast edge speeds, multi-layer boards are recommended above 200 MHz. MECL III's popularity is with high-speed test and communications equipment.

Speed/power comparisons for Motorola ECL families are as follows:

SPEED/POWER CHARACTERISTICS FOR (MECL)

(ALL TYPICAL RATINGS)

		MECL 10K				10KH	III	
Characteristic	**Symbol**	**MC101xx**	**MC102xx**	**MC105xx**	**MC106xx**	**MC10H1xx**	**MC16xx**	**Units**
Quiescent Supply Current/Gate	I_G	5.0	5.0	5.0	5.0	5.0	10	mA
Power/Gate (Quiescent)	P_G	26	26	26	26	26	54	mW
Propagation Delay	t_p	2.0	1.5	2.0	1.5	1.0	1.1	ns
Speed Power Product	—	52	39	52	39	26	59	pJ
Clock Frequency (D-F/F)	f_{max}	150	225	150	225	300	550	MHz
Clock Frequency (Counter)	f_{max}	150	—	150	—	300	1200	MHz

CMOS

Complementary MOS (CMOS) technology provides the lowest power consumption logic circuits available in the industry. The term "complementary" refers to the basic circuit building unit, where a pair of N and P-channel insulated gate FET's are cascoded. This configuration results in extremely low quiescent current, drawing power only when being switched.

Motorola offers two versions of CMOS logic circuits: *Standard CMOS* in metal gate technology, and *High-Speed CMOS* in silicon gate technology.

Standard CMOS logic is best suited for systems which require low power and low-to-medium speed (1 MHz) operation. Some devices are available in both B and UB series, as designated by EIA/JEDEC specifications. UB series gates and inverters are constructed with a single inverting stage between input and output, as opposed to multiple gain stages in the B series. The subsequent decreased gain in the UB series results in less noise immunity; however, these UB devices are useful when CMOS gates and inverters are used in a "Linear" mode to form oscillators, monostables, or amplifiers. These devices also exhibit higher speed since only a single stage is involved.

The new High-Speed CMOS family consists of a full-line of products that are pinout compatible with the most popular LSTTL and MC14000B Standard CMOS series parts. Use of the latest silicon-gate processing technology allows the High-Speed CMOS family to combine the switching speeds and operating frequencies of LSTTL with the low power-consumption advantages of CMOS. The standard logic devices in the family will drive ten LSTTL loads. The bus-compatible devices will drive fifteen LSTTL loads. The devices feature CMOS input levels, the high noise immunity that is characteristic of CMOS, and a wide power-supply operating range (2 to 6 volts).

High-Speed CMOS logic circuits may interface with LSTTL circuits directly when driving, and through a level shifter when being driven. The latter is due to the selection of slightly different threshold voltages for the High-Speed CMOS than those of LSTTL to provide higher DC Noise Margins.

Speed/power comparisons between the two CMOS families are as follows:

(ALL TYPICAL RATINGS)

SPEED/POWER CHARACTERISTICS FOR CMOS LOGIC

Characteristic	**Symbol**	**Standard CMOS**	**Hi-Speed CMOS**	**Units**
Quiescent Supply Current/Gate	I_G	.0001	.0003	mA
Power/Gate (Quiescent)	P_G	.0006	.001	mW
Propagation Delay	t_p	125	8.0	ns
Speed Power Product	—	.075	.01	pJ
Clock Frequency (D-F/F)	f_{max}	4.0	40	MHz
Clock Frequency (Counter)	f_{max}	5.0	40	MHz

Functionally Comparable Logic Integrated Circuits

The following table offers a quick guide to logic circuits in the various families available from Motorola. Devices perform comparable functions within a specific logic family. Pinout configurations are generally identical when the numbers in the columns correspond, although there may be exceptions. Consult the data sheets for specific details.

The numbers in the various columns are suffixes that follow the basic line prefixes associated with each specific product line. These basic prefixes are as follows:

PREFIXES:	**LS: SN54/74LS**	**Standard CMOS: MC14**	**MECL10K: MC10**
	FAST: MC54/74F	**Hi-Speed CMOS: MC54/74HC**	**MECL10KH: MC10H**
			MECL III: MC

Thus, the TTL LS Quad 2-input gate (item 1 in the table) can be ordered under the part number SN54LS06 (or SN74LS06). Similarly, the MECL10KH 2-input gate bears the part number MC10KH104.

Function†	TTL		CMOS		Package	MECL			Package
	LS	FAST	STD	HC	TTL/CMOS	10K	10KH	III	MECL
AND Gates									
Quad 2-Input	06	06	061	06	632, 646	104	104		620, 648, 650
Quad 2-Input, Open-Collector	09								
Triple 3-Input	11	11	073	11					
Triple 3-Input, Open-Collector	15								
Dual 4-Input	21		062						
Hex						197			
NAND Gates									
Quad 2-Input	00	00	011	00	632, 646				
Quad 2-Input, Open-Collector	01								
Quad 2-Input, Open-Collector	03			03					
Quad 2-Input, High-Voltage	26								
Quad 2-Input Buffer	37								
Quad 2-Input Buffer, Open-Collector	36								
13-Input	133			133	620,648				
Triple 3-Input	10	10	023	10	632, 646				
Triple 3-Input, Open-Collector	12								
Dual 4-Input	20	20	012	20					
Dual 4-Input, Open-Collector	22								
Dual 4-Input Buffer	40								
8-Input	30		068	30					
OR Gates									
Quad 2-Input	32	32	071	32	632, 646	103	103	1664	620, 648, 650
Dual 3-Input 3-Output						110			
High-Speed Dual 3-Input 3-Output						210	210		
Triple 3-Input			075	4075					
Dual 4-Input			072						
NOR Gates									
Quad 2-Input	02	02	001	02	632, 646	102	102	1662	620, 648, 650
Quad 2-Input Buffer	28								
Quad 2-Input Buffer, Open-Collector	33								
Dual 5-Input	260								
Triple 3-Input	27		025	27					

†For Temperature Characteristics of the various Logic Lines, see end of table.

(continued)

LOGIC PRODUCTS — STANDARD (continued)

Functionally Comparable Logic Integrated Circuits (continued)

The numbers in the various columns are suffixes that follow the basic line prefixes associated with each specific product line. These basic prefixes are as follows:

PREFIXES:	LS: SN54/74LS	Standard CMOS: MC14	MECL10K: MC10
	FAST: MC54/74F	Hi-Speed CMOS: MC54/74HC	MECL10KH: MC10H
			MECL III: MC

Thus, the TTL LS Quad 2-input gate (item 1 in the table) can be ordered under the part number SN54LS06 (or SN74LS06). Similarly, the MECL10KH 2-input gate bears the part number MC10KH104.

Function†	TTL		CMOS		Package TTL/CMOS	MECL			Package MECL
	LS	FAST	STD	HC		10K	10KH	III	
NOR Gates (continued)									
Quad 2-Input with Strobe					632, 646	100	100		620, 648, 650
Triple 4-3-3 Input						106	106		
Dual 3-Input 3-Output						111			620,648
High-Speed Dual 3-Input 3-Output						211	211		620, 648, 650
Dual 3-Input, plus Inverter			000						
Dual 4-Input			002	4002					
8-Input			078	4078					
Exclusive OR Gates									
Quad	86	86	070	86	632, 646	113	113		620, 648, 650
2-Input Quad	386								
Quad, Open-Collector	136								
Triple 2-Input								1672	620
Exclusive NOR Gates									
Quad	266		077	266	632, 646				
Triple 2-Input								1674	620
Complex Gates									
Quad OR/NOR					632, 646	101	101		620, 648, 650
Triple 2-3-2 Input OR/NOR						105	105	1688	
Triple 2-Input Exclusive OR/Exclusive NOR						107	107		
Dual 4-5 Input OR/NOR						109	109		
Dual 4-5 Input OR/NOR							209		
Dual 2-Wide 2-3 Input OR-AND/ OR-AND-Invert						117	117		
Dual 2-Wide 3-Input OR-AND						118	118		
4-Wide 4-3-3-3 Input OR-AND Gate						119	119		
OR-AND/OR-AND-INVERT Gate						121	121		
High-Speed Dual 3-Input 3-Output OR/NOR						212			
Dual 4-Input OR/NOR								1660	
Dual AND-OR-INVERT Gate	51								
Dual AND-OR-INVERT Gate			506		620,648				
3-2-2-3 Input AND-OR-INVERT Gate	54				632, 646				
2-Wide and 4-Input AND-OR-INVERT Gate	55								
4-2-2-3 Input AND-OR-INVERT Gate		64							

†For Temperature Characteristics of the various Logic Lines, see end of table.

(continued)

Functionally Comparable Logic Integrated Circuits (continued)

Function†	TTL		CMOS		Package TTL/CMOS	MECL			Package MECL
	LS	FAST	STD	HC		10K	10KH	III	
Complex Gates (continued)									
Triple Gate (Dual 4-Input NAND Gate and 2-Input NOR/OR Gate or 8-Input AND/NAND Gate)			501		620, 648				
4-Bit AND/OR Selector (Quad 2-Channel Data Selector or Quad Exclusive NOR Gate)			519						
Dual 5-Input Majority Logic Gate			530						
Hex Gate (Quad Inverter plus 2-Input NOR Gate plus 2-Input NAND Gate)			572						
Inverters/Buffers (Non 3-State)									
Hex Inverter	04	04	069	04	632, 646				620, 648
Hex Inverter, Open-Collector	05								
Dual Complementary Pair plus Inverter			007						
Hex Buffer			050	4050	620, 648				
Strobed Hex Inverter/Buffer			502						
Hex Buffer with Enable						188	188		
Hex Inverter with Enable						189	189		
Hex Inverter/Buffer			049	4049		195			
Translators									
Quad MTTL to MECL, ECL Strobe					620, 648	124	124		620, 648
Quad TTL to MECL, TTL Strobe							424		
Quad MECL to MTTL						125	125		
Quad MECL to TTL, Single Supply							350		
Triple MECL to NMOS						177			
TTL or CMOS to CMOS Hex Level Shifter			504						
Quad MST-to-MECL 10,000						190			
Hex MECL 10,000 to MST						191			
Bus-Oriented 3-State Circuits									
Quad Buffer, Low Enable	125A			125	632, 646				
Quad Buffer, High Enable	126A			126					
Octal Bus/Line Driver, Inverting	240	240		240	732, 738				
Octal Bus/Line Driver	241	241		241					
Quad Bus Transceiver, Inverting	242	242		242	632, 646				
Quad Bus Transceiver, Noninverting	243	243		243					
Octal Driver, Noninverting	244	244		244	732, 738				
Octal Bus Transceiver, Noninverting	245	245		245					
Hex Buffer, Common Enable	365A			365	620, 648				
Hex Inverter, Common Enable	366A			366					
Hex Buffer, 4-Bit and 2-Bit	367A		503	367					
Hex Inverter, 4-Bit and 2-Bit	368A			368					
Octal Buffer (81LS95)	795				732,738				

†For Temperature Characteristics of the various Logic Lines, see end of table.

(continued)

LOGIC PRODUCTS — STANDARD (continued)

Functionally Comparable Logic Integrated Circuits (continued)

The numbers in the various columns are suffixes that follow the basic line prefixes associated with each specific product line. These basic prefixes are as follows:

PREFIXES:	**LS: SN54/74LS**	**Standard CMOS: MC14**	**MECL10K: MC10**
	FAST: MC54/74F	**Hi-Speed CMOS: MC54/74HC**	**MECL10KH: MC10H**
			MECL III: MC

Thus, the TTL LS Quad 2-input gate (item 1 in the table) can be ordered under the part number SN54LS06 (or SN74LS06). Similarly, the MECL10KH 2-input gate bears the part number MC10KH104.

	TTL		CMOS		Package	MECL			Package
Function†	**LS**	**FAST**	**STD**	**HC**	**TTL/CMOS**	**10K**	**10KH**	**III**	**MECL**
Bus-Oriented 3-State Circuits (continued)									
Octal Buffer (81LS96)	796				732, 738				620
Octal Buffer (81LS97)	797								
Octal Buffer (81LS98)	798								
Octal Buffer/Line Driver	540			540					
Octal Buffer/Line Driver	541			541					
Octal Bus Transceiver, Inverting	640	640		640					
Octal Bus Transceiver, True, Inverting	643	643		643					
Octal Bus Transceiver, Noninverting	645								
Octal Transceiver with Storage	620	620							
Octal Transceiver with Storage	623	623							
Octal Bus Transceiver, Inverting, Open-Collector									
Octal Bus Transceiver, Open-Collector									
Octal Transceiver/Latch/Multiplexer, Noninverting				646	724** 758				
Octal Transceiver/Latch/Multiplexer, Inverting				648					
Dual Latching Bus Driver						128			
Bus Driver (25 ohm outputs)									
Triple 4-3-3 Input						123	123		620, 648
Triple 3-Input Driver with Enable							423		
Bus Driver/Receiver (25 ohm outputs)									
Quad with 2-1 Output Multiplexer							330		724,758**
Dual with 4-to-1 Output Multiplexers							332		732, 738
Quad with Transmit and Receiver Latches							334		
Open-Collector Bus Transceivers									
Octal Bus, Noninverting, Open-Collector	641				732, 738				
Octal Bus, Inverting, Open-Collector	642								
Octal Bus, True, Inverting, Open-Collector	644								
Octal with Storage, Open-Collector	621								
Octal with Storage, Open-Collector	622								
Schmitt Triggers									
Quad 2-Input NAND	132		093	132	632,646				
Dual			583		620,648				
Dual 4-Input	13				632, 646				
Hex	14		584	14					

†For Temperature Characteristics of the various Logic Lines, see end of table.
**Also available in Packages 623 and 709.

(continued)

Functionally Comparable Logic Integrated Circuits (continued)

Function†	TTL		CMOS		Package	MECL			Package
	LS	FAST	STD	HC	TTL/CMOS	10K	10KH	III	MECL
Latches									
4-Bit Bi-Stable Latch with Q and Q	75		042	75	620,648				620, 648
4-Bit Bi-Stable Latch	77				632,646				
Quad Latch	375				620, 648	168			
Quad NAND R-S Latch	279		044						
8-Bit Addressable Latch (9334)	259		099	259					
Dual 4-Bit Addressable Latch	256								
Dual Latch						130	130		
Quad (negative transition) Latch						133			
Quad (positive transition) Latch						153			
Quint Latch						175	175		
Quad NOR R-S Latch			043						
Dual 4-Bit Latch			508		623,709				
8-Bit Addressable with Bidirectional Port			599		707,726				
3-State Latches									
Octal Transparent Latch	373	373		373	732,738				
Octal Transparent Latch				573					
Octal Transparent Latch, Inverting				563					
Octal Transparent Latch		533		533					
8-Bit, Bus-Compatible — Internal Counter			597		620,648				
8-Bit, Bus-Compatible — Binary Address			598		707,726				
Flip-Flops/Registers									
Dual JK			027		620,648	135	135		620,648
Dual JK	73A			73	632, 646				
Dual D	74A	74	013	74		131	131		
Dual JK	76A			76	620,648				
Dual JK with Preset	78A				632,646				
Dual JK with Preset	109A	109		109	620,648				
Dual JK with Clear	107A			107	632,646				
Dual JK Edge-Triggered	112A	112		112	620,648				
Dual JK Edge-Triggered	113A	113		113	632,646				
Dual JK Edge-Triggered	114A	114							
4-Bit D Register, 3-State	173		076	173	620,648				
Hex D with Clear	174	174	174	174					
Hex D with Enable	378	378			732,738				
Quad D with Clear	175	175	175	175	620,648				
Octal D with Clear	273			273	732,738				
Octal D, 3-State	374	374		374					
Octal D with Enable	377								
4-Bit D with Enable	379	379			620,648				
Hex D						176	176		
Hex "D" Master-Slave/with Reset						186	186		

†For Temperature Characteristics of the various Logic Lines, see end of table.

(continued)

LOGIC PRODUCTS — STANDARD (continued)

Functionally Comparable Logic Integrated Circuits (continued)

The numbers in the various columns are suffixes that follow the basic line prefixes associated with each specific product line. These basic prefixes are as follows:

PREFIXES:	**LS: SN54/74LS**	**Standard CMOS: MC14**	**MECL10K: MC10**
	FAST: MC54/74F	**Hi-Speed CMOS: MC54/74HC**	**MECL10KH: MC10H**
			MECL III: MC

Thus, the TTL LS Quad 2-input gate (item 1 in the table) can be ordered under the part number SN54LS06 (or SN74LS06). Similarly, the MECL10KH 2-input gate bears the part number MC10KH104.

	TTL		CMOS		Package	MECL			Package
Function†	**LS**	**FAST**	**STD**	**HC**	**TTL/CMOS**	**10K**	**10KH**	**III**	**MECL**
Flip-Flops/Registers (continued)									
Octal D, Inverting, 3-State				564	732,738				620, 648
Octal D, 3-State				574					
High-Speed Dual Type D Master-Slave						231			
Dual Clocked R-S								1666	
Dual Clocked Latch								1668	
Master-Slave Type D								1670	
UHF Prescaler Type D								1690	
Octal D Flip-Flop, 3-State		534		534					
Counters									
Decade	90				632, 646				620, 648
Divide-By-12	92								
4-Bit Binary	93					154			
Decade, Asynchronously Presettable	196								
4-Bit Binary, Asynchronously Presettable	197								
BCD Decade, Asynchronously Reset	160A	160	160	160	620, 648				
4-Bit Binary, Asynchronous Reset	161A	161	161	161		178	016	1654	
BCD Decade, Synchronous Reset	162A	162	162	162					
4-Bit Binary, Synchronous Reset	163A	163	163	163					
Up/Down Decade, with Clear	192	192	510	192					
Up/Down Binary, with Clear	193	193	516	193					
Up/Down Decade	190	190				137			
Up/Down Binary	191	191	029			136	136		
Decade (Divide By 2 and 5)	290				632, 646	138		1678	
4-Bit Binary	293								
Dual Decade	390		518	390	620, 648				
Dual 4-Bit Binary			520						
Dual 4-Bit Binary	393			393	632,646				
Dual Decade	490				620,648				
Decade Up/Down, 3-State	568				732, 738				
Binary Up/Down, 3-State	569								
Synchronous 4-Bit Up/Down Decade	668				620, 648				
Synchronous 4-Bit Up/Down Binary	669								
Up/Down Decade	168	168							
Up/Down Binary	169	169							

†For Temperature Characteristics of the various Logic Lines, see end of table.

(continued)

Functionally Comparable Logic Integrated Circuits (continued)

Function†	TTL		CMOS		Package TTL/CMOS	MECL			Package MECL
	LS	FAST	STD	HC		10K	10KH	III	
Counters (continued)									
Programmable Decade	716		522		620, 648				626, 693
Programmable Binary	718		526						
4-Bit Decode, 3-State					732, 738				
4-Bit Binary, 3-State									
Decade Counter/Latch/Multiplexer									
Asynchronous Reset, 3-State									
Binary Counter/Latch/Multiplexer									
Asynchronous Reset, 3-State									
Decade Counter/Latch/Multiplexer, Synchronous Reset, 3-State									
Binary Counter/Latch/Multiplexer, Synchronous Reset, 3-State									
Seven-Stage Ripple Counter			024		632,646				
Decade Counter/Divider			017	4017	620, 648				
Presettable Divide-by-N			018						
14-Bit Binary Counter/Divider			060	4060					
12-Bit Binary			040	4040					
14-Bit Binary			020	4020					
Octal Counter/Divider			022						
Dual Programmable BCD/Binary			569						
Three-Digit BCD			553						
Real Time 5-Decade			534		623, 709				
1 GHz Divide-by-Four Prescaler								1697	
1 GHz Divide-by-Four								1699	620,648
Register Files									
4 x 4 Register File, Open-Collector	170								620, 648
4 x 4 Register File, 3-State	670								
16 x 4 Bit Register File							145		
Shift Registers									
8-Bit Serial-In/Parallel-Out Shift Register	164			164	632,646				620
8-Bit Universal Bus Register			034		623,709				
8-Bit Parallel-In/Serial-Out Shift Register	165		021	165	620,648				
8-Bit Shift Register Serial-In/Serial-Out	91				632, 646				
4-Bit Shift Register	95B								
8-Bit Parallel-In/Serial-Out Shift Register	166		014		620, 648				
4-Bit Shift Register	195A			195				1694	
4-Bit Universal Shift Register	194A	194	194	194		141	141		620, 648
18-Bit Static Shift Register			006		632,646				
1-to-64 Bit Variable Length Shift Register			557		620,648				
Dual 64-Bit Static Shift Register			517		648,690				
4-Bit Parallel-In/Parallel-Out Shift Register			035		620,648				

†For Temperature Characteristics of the various Logic Lines, see end of table.

(continued)

LOGIC PRODUCTS — STANDARD (continued)

Functionally Comparable Logic Integrated Circuits (continued)

The numbers in the various columns are suffixes that follow the basic line prefixes associated with each specific product line. These basic prefixes are as follows:

PREFIXES:
LS: SN54/74LS
FAST: MC54/74F
Standard CMOS: MC14
Hi-Speed CMOS: MC54/74HC
MECL10K: MC10
MECL10KH: MC10H
MECL III: MC

Thus, the TTL LS Quad 2-input gate (item 1 in the table) can be ordered under the part number SN54LS06 (or SN74LS06). Similarly, the MECL10KH 2-input gate bears the part number MC10KH104.

Function†	TTL		CMOS		Package TTL/CMOS	MECL			Package MECL
	LS	FAST	STD	HC		10K	10KH	III	
Shift Registers (continued)									
Dual 4-Bit Static Shift Register			015		620,648				
128-Bit Static Shift Register			562		632,646				
Shift Registers (3-state)									
Binary Bidirectional Shift Register/ Latch/Multiplexer					732, 738				
BCD Bidirectional Shift Register/ Latch/Multiplexer									
16-Bit Serial-In/Serial-Out Shift Register	673				623, 649				
16-Bit Parallel-In/Serial-Out Shift Register	674								
4-Bit Shift Register	295A				632,646				
8-Bit Shift/Storage Register			094		620,648				
8-Bit Shift/Storage Register	299			299	732, 738				
8-Bit Shift Register with Sign Extend	322A								
8-Bit Shift/Storage Register	323								
4-Bit Shift Register	395				620,648				
Multiplexers/Data Selectors									
Quad 2-Input Multiplexer, Noninverting	157	157	519	157	620, 648	158	158		620, 648
Quad 2-Input Multiplexer, Inverting	158	158		158		159	159		
Quad 2-Input MUX, Noninverting, 3-State	257A	257		257					
Quad 2-Input Multiplexer, Inverting, 3-State	258A	258							
Quad 2-Multiplexer, with Output Register	298					173	173		
Dual 4-Input Multiplexer	153	153	539	153		174	174		
Dual 4-Input Multiplexer, 3-State	253	253		253					
8-Input Multiplexer	151	151		151		164	164		
8-Input Multiplexer, 3-State	251	251	512	251					
Dual 4-Input Multiplexer (Inverting LS153)	352	352							
Dual 4-Input Multiplexer (3-State LS352)	353	353							
Quad 2-Input Multiplexer with Output Register	398				732,738				
Quad 2-Input Multiplexer with Output Register	399				620,648				
16-to-8 Multiplexer, 3-State, with Latch	604				710, 733				
16-to-8 Multiplexer, 3-State, with Latch	606								
16-to-8 MUX, Open-Collector, with Latch	605								
16-to-8 MUX, Open-Collector, with Latch	607								
Synchronous Address Multiplexer (MC6883)	783				711, 734				
Dual MUX with Latch and Common Reset						132			

†For Temperature Characteristics of the various Logic Lines, see end of table.

(continued)

Functionally Comparable Logic Integrated Circuits (continued)

Function†	TTL		CMOS		Package TTL/CMOS	MECL			Package MECL
	LS	FAST	STD	HC		10K	10KH	III	
Multiplexers/Data Selectors (continued)									
Dual Multiplexer with Latch					632, 646	134			620, 648
Quad Analog Switch/Quad Multiplexer			016	4016					
Quad Analog Switch/Quad Multiplexer			066	4066					
Triple 2-Channel Analog MUX/DEMUX			053	4053	620				
Dual 4-Channel Analog MUX/DEMUX			052	4052					
Dual 4-Channel Analog Data Selector			529						
Quad 2-Input Analog MUX/DEMUX			551						
8-Channel Analog Multiplexer/Demultiplexer			051	4051					
4-to-16 Decoder				154	724,758**				
8-Input Multiplexer, 3-State				354	732, 738				
8-Input Multiplexer, 3-State				356					
Decoders/Demultiplexers									
Dual 1-of-4 Decoder/Demultiplexer	139	139		139	620, 648				620, 648
Dual 1-of-4 Decoder (Low)	155		556			171	171		
Dual 1-of-4 Decoder, Open-Collector	156								
1-of-10 Decoder	42			42					
1-of-10 Decoder/Driver, Open-Collector	145								
1-of-8 Decoder/Demultiplexer (Low)	138	138		138		161	161		
3-Line to 8-Line Decoder/Demultiplexer	137								
Binary to 1-8 (High)						162	162		
Dual Binary 1-4 (High)			555			172	172		
BCD-to-Decimal/Binary-to-Octal Decoder			028						
4-Bit Latch/4-to-16 Line Decoder (High)				4514	724,758**				
4-Bit Latch/4-to-16 Line Decoder (High)			514		623, 709				
4-Bit Latch/4-to-16 Line Decoder (Low)			515						
Display Decoder/Drivers									
BCD to 7-Segment, Open-Collector	47				620, 648				
BCD to 7-Segment with Pull-Ups	48		558						
BCD to 7-Segment, Open-Collector	49				632,646				
BCD to 7-Segment, Open-Collector	247				620, 648				
BCD to 7-Segment with Pull-Ups	248								
BCD to 7-Segment, Open-Collector	249								
Hex-to-7 Segment Latch			495						
BCD-to-7 Segment Latch			511	4511					
BCD-to-7 Segment Latch — Ripple Blanking			513		707,726				
BCD-to-7 Segment Latch			543	4543	620,648				
BCD-to-7 Segment Latch — Ripple Blanking			544		707,726				
BCD-to-7 Segment — High Current			547		620,648				

†For Temperature Characteristics of the various Logic Lines, see end of table.
**Also available in Packages 623 and 709.

(continued)

Functionally Comparable Logic Integrated Circuits (continued)

The numbers in the various columns are suffixes that follow the basic line prefixes associated with each specific product line. These basic prefixes are as follows:

PREFIXES:	**LS: SN54/74LS**	**Standard CMOS: MC14**	**MECL10K: MC10**
	FAST: MC54/74F	**Hi-Speed CMOS: MC54/74HC**	**MECL10KH: MC10H**
			MECL III: MC

Thus, the TTL LS Quad 2-input gate (item 1 in the table) can be ordered under the part number SN54LS06 (or SN74LS06). Similarly, the MECL10KH 2-input gate bears the part number MC10KH104.

Function†	TTL		CMOS		Package	MECL			Package
	LS	FAST	STD	HC	TTL/CMOS	10K	10KH	III	MECL
Display Drivers									
48-Segment Multiplexed LCD Driver (Master)			5000		623,709				
48-Segment Multiplexed LCD Driver (Slave)			5001		707,726				
Priority Encoders									
10-Line Decimal to 4-Line Priority Encoder	147			147	620, 648				620, 648
8-Input to 3-Line Priority Encoder	148		532			165	165		
8-Input to 3-Line Priority Encoder	748								
8-Input to 3-Line Priority Encoder, 3-State	348								
8-Input to 3-Line Priority Encoder, 3-State	848								
Multivibrators									
Retriggerable Monostable Multivibrator	122				632,646	198			620, 648
Dual Retriggerable Monostable Multivibrator	123		528	123A	620, 648				
Dual One-Shot (Very Stable)	221			221A					
Dual Precision Retriggerable/Resettable Monostable Multivibrator			538	4538					
Oscillators/Timers									
Voltage Controlled Oscillator	724				626,693			1658	620, 648
25-Stage Frequency Divider			521		620, 648				
Programmable Timer			536						607, 632, 646
Programmable Oscillator/Timer			541		632,646				
Emitter Coupled Oscillator								1648	
Receivers									
Triple Line						114			620, 648
Quad Line						115	115		
Quad Line								1692	620,650
Triple Line						116	116		620, 648
High-Speed Triple Line						216			
Quad Bus						129			
Comparators									
4-Bit Magnitude Comparator	85		585	85	620,648				620,648
8-Bit Magnitude Comparator		521			732, 738				
8-Bit Magnitude Comparator, 3-State	682								
8-Bit Magnitude Comparator, 3-State	684								
8-Bit Magnitude Comparator	688			688					
8-Bit Magnitude Comparator, Open-Collector	683								

†For Temperature Characteristics of the various Logic Lines, see end of table.

(continued)

Functionally Comparable Logic Integrated Circuits (continued)

Function†	TTL		CMOS		Package	MECL			Package
	LS	FAST	STD	HC	TTL/CMOS	10K	10KH	III	MECL
Comparators (continued)									
8-Bit Magnitude Comparator, Open-Collector	685				732, 738				620, 648
8-Bit Magnitude Comparator, Open-Collector	689								
8-Bit Magnitude Comparator with Enable	686				724, 758**				
8-Bit Magnitude Comparator with Enable	687								
5-Bit Magnitude Comparator						166	166		
Arithmetic Operators									
4-Bit Full Adder	83A		008		620,648				620,648
4-Bit Full Adder (Rotated LS83A)	283	283		283					
4-Bit ALU	181	181			623,649	181	181		
			581		623,709				
				181	724,758**				
		381			732,738				
4-Bit Barrel Shifter		350			620,648				
Quad 4-Bit Adder Subtractor	385				732,738				
Look Ahead Carry Generator	182	182	582		620,648	179	179		
Dual Carry/Save Full Adder	183				632,646				
Dual High-Speed Adder/Subtractor						180	180		
2-Bit Logic Unit/Function Generator						182			
4 x 2 Multiplier						183			623
2 x 1 Array Multiplier, High-Speed						287			620,648
BCD Rate Multiplier			527		620, 648				
2 x 2 Bit Parallel Binary Multiplier			554						
Triple Serial Adder (Positive Logic)			032						
Triple Serial Adder (Negative Logic)			038						
NBCD Adder			560						
9's Complementer			561		632,646				
Parity Generators/Checkers									
9-Bit Odd/Even Parity Generator/Checker	280	280		280	632,646	170			620, 648
12-Bit Parity Generator/Checker			531		620,648	160	160		
Error Detection-Correction									
IBM Code						163			620, 648
Motorola Code						193			
Hamming Code		2960			740				

†For Temperature Characteristics of the various Logic Lines, see end of table.
**Also available in Packages 623 and 709.

Temperature Ranges:

TTL 54 Series: −55 to +125°C	CMOS MC14...A/54 Series: −55 to +125°C	MECL 100/200 Series: −30 to +85°C
TTL 74 Series: 0 to +70°C	CMOS MC14...C/74 Series: −40 to +85°C	MECL MC Series: −30 to +85°C

MECL10K and 10KH products listed have 100 and 200 series suffix numbers. Corresponding products with a military temperature range of −55°C to +125°C (not listed) are available under type numbers MC10500, MC10600, with the 500/600 series numbers corresponding to the 100 and 200 series suffixes of the non-Mil MECL lines.

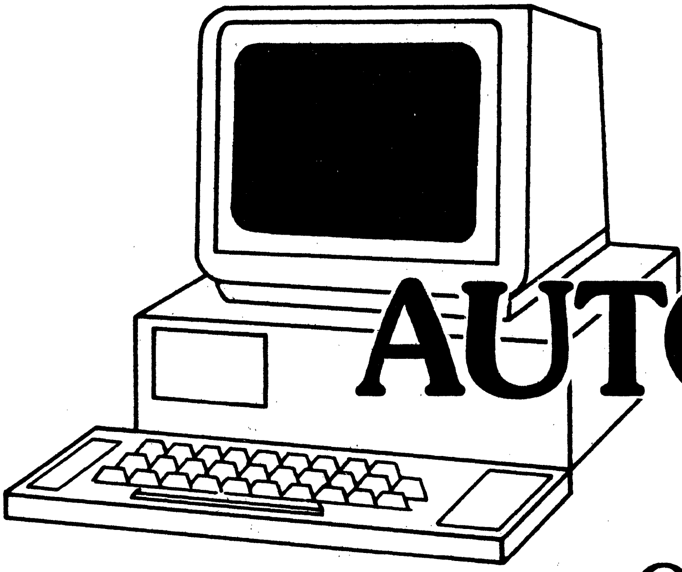

DON'T MISS THE NEW DESIGN AUTOMATION IC SECTION

Quick and easy way to determine relationships between workstations, computers, software, semicustom manufacturers and CAE/CAD providers.

Volume II, page 4901

NCR

NCR45CG72
Geometric Arithmetic Parallel Processor

Features

- **CMOS systolic array with 72 processors per chip**
- **12 x 6 array of bit serial processing elements**
- **Single instruction multiple data stream architecture—all processing elements operate in parallel**
- **GAPP devices are fully cascadeable**
- **System throughput increases linearly with number of processor elements in the system**
- **Broadcast global input and output**
- **Separate I/O bus = overlapped I/O and computation**
- **128 Bits of static RAM per processor**
- **VLSI double layer metal CMOS technology**
- **500 milliwatts power at 10 MHz**

Applications

Pattern Recognition

- Correlation
- Sobel Transform
- Spoke Filter
- Template Matching
- Automated Inspection
- Machine Vision

Parallel Data Processing

- Convolution
- Matrix Operations
- Histogram
- Search and Sort

Image Processing

- Image Enhancement
- Edge Detection
- 2-Dimensional Convolution
- Compression
- Spatial Filtering
- Differential Imaging

Associative Processor

- Content Addressable Memory
- Limit Search
- Hamming Distance

Functional Description

Announced in 1984, the Geometric Arithmetic Parallel Processor, or GAPP™ chip is the first commercially available systolic array parallel processing integrated circuit. For its efforts, NCR was awarded the Industrial Research award by Research and Development Magazine. The GAPP chip is a general purpose processor that can be used in a wide variety of applications such as: Pattern Recognition, Automated Inspection, Machine Vision, Image Processing, Parallel Data Processing, and Associative Processing. On each chip are 72 processing elements arrayed in a 12 x 6 configuration. The 72 processing elements each operate concurrently, executing the same instructions at the same time. If we contrast this with the traditional Von Neumann architecture that is commonly used in computers today (in which a single processing element processes a single data item at a time), by comparison, a single GAPP chip processes 72 times as many data items at a time. For this reason, the architecture of the GAPP chip is referred to as Single Instruction Multiple Data (SIMD) as opposed to the Von Neumann architecture which is referred to as Single Instruction Single Data, or SISD.

In addition, each processing element on the chip can communicate with its immediate neighbor processing elements in the 12 x 6 array, a very desirable characteristic in many parallel processing applications. In effect, each processing element is only aware of processing elements in its local neighborhood. This property allows designers the ability to directly cascade GAPP chips to form arbitrarily large arrays of processing elements. For instance, 2 GAPP chips can be connected to form a 12 x 12 array, or 24 x 6 array of processing elements. Regardless of the configuration, with 2 GAPP chips you have the processing power of 144 processing elements all operating in parallel.

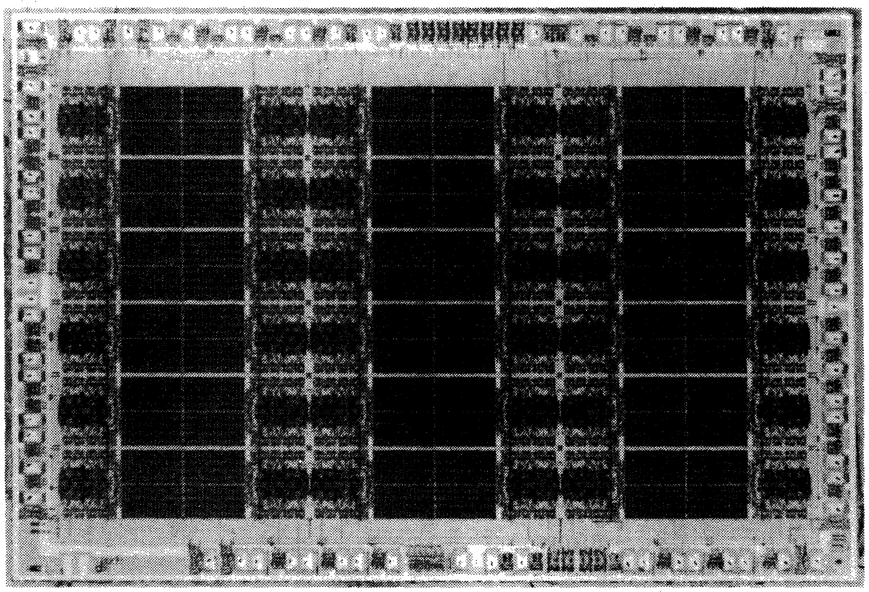

NCR45CG72—GEOMETRIC ARITHMETIC PARALLEL PROCESSOR CHIP

1985 COMPETITION WINNER
IR 100
Cited by *Research & Development* magazine for developing one of the 100 most significant technical products of the year

GAPP™ is a registered trademark of NCR Corporation.

Copyright © 1985 by NCR Corporation, Dayton, Ohio, U.S.A.
All Rights Reserved. Printed in the U.S.A.

CONTACT: DSP Product Marketing
2001 Danfield Ct., Ft. Collins, CO 80525
PHONE: 303/226-9500 TELEX: 454505 NCR MICRO FTCN

NCR45CG72
Geometric Arithmetic Parallel Processor

The architecture of the GAPP chip makes it ideal for many neighborhood operations frequently encountered in image processing applications. These include convolution, correlation, and edge detection just to name a few. For example, a single GAPP chip can perform a 3 x 3 convolution on 8-bit data at a processing rate of 400,000 pixels per second. Edge detection over a 3 x 3 neighborhood using the Sobel gradient operator can be done at a processing rate of 688,000 pixels per second using a single GAPP device. As devices are cascaded to form larger arrays of processing elements the performance of a GAPP based system provides unmatched processing power.

Performance of GAPP Systems

Calculation	Execution Time (Per Image Plane with 10 MHz Clock)	Pixels per Second Processed		
		6 X 12 Array (1 GAPP)	48 X 48 Array (32 GAPPS)	192 X 192 Array (512 GAPPS)
1. 8-Bit Add	2.5 μS	28.8 M	921 M	14.7 B
2. 8-Bit Multiply	27.1 μS	2.6 M	124 M	1.3 B
3. 8-Bit 3 X 3 Gauss Filter*	71.7 μS	557 K	30 M	503 M
4. 8-Bit 3 X 3 Convolution*	100 μS (Typical)	400 K	22 M	361 M
5. 8-Bit 5 X 5 Convolution*	273 μS (Typical)	58 K	7 M	129 M
6. Binary 21 X 21 Correlation*	1.1 mS	—	712 K**	27 M
7. Edge Detection (Sobel Gradient)	58.1 μS	688 K	36 M	621 M

*Efficiency improved if edge buffers used.
**2M if edge buffers are used.

Development Support

The GAPP chip is supported by software development tools that greatly enhance the ability of programmers to develop GAPP software. These two products are the NCR45GDS1, the GAPP PC Development System, and the NCR45GS2, the GAPP Simulator/Assembler.

The GAPP PC Development System consists of a board which plugs into an IBM PC or PC compatible computer, and user interface software. The PC Development System is targeted for programmers who wish to develop GAPP software in a personal computer environment. The board contains two GAPP devices configured to form a 12 x 12 array of parallel processing elements. Programs written by the programmer are downloaded from the PC to the board and executed on GAPP hardware.

Programs are written in the GAPP Algorithm Language (GAL™), a high-level programming language that allows GAPP instructions to be imbedded in C programming language control statements. The program debugger allows users to: single step through a GAPP program, execute to a user specified breakpoint, or execute an entire program. In addition, programmers are able to examine the internal state of each processing element in the array as programs are being debugged.

The Simulator/Assembler supports programmers who develop GAPP software in a VAX environment. The Simulator allows programmers to simulate in software the execution of GAPP programs.

Programs for the Simulator use GAPP mnemonic instructions. Within the Simulator, programmers can execute single instructions, or a sequence of instructions. While executing files that contain a sequence of GAPP instructions, programmers can specify breakpoints wherever there is a need to suspend program execution to examine the internal state of the processing element array.

With these two development tools: the 45GDS1, and 45GS2, NCR supports GAPP software development for the most popular development system environments.

For Further Information

What does this all mean? It means that NCR offers the processing power to solve your most difficult applications with support tools that allow you to utilize the power of parallel processing in your systems.

GAL™ is a registered trademark of NCR Corporation

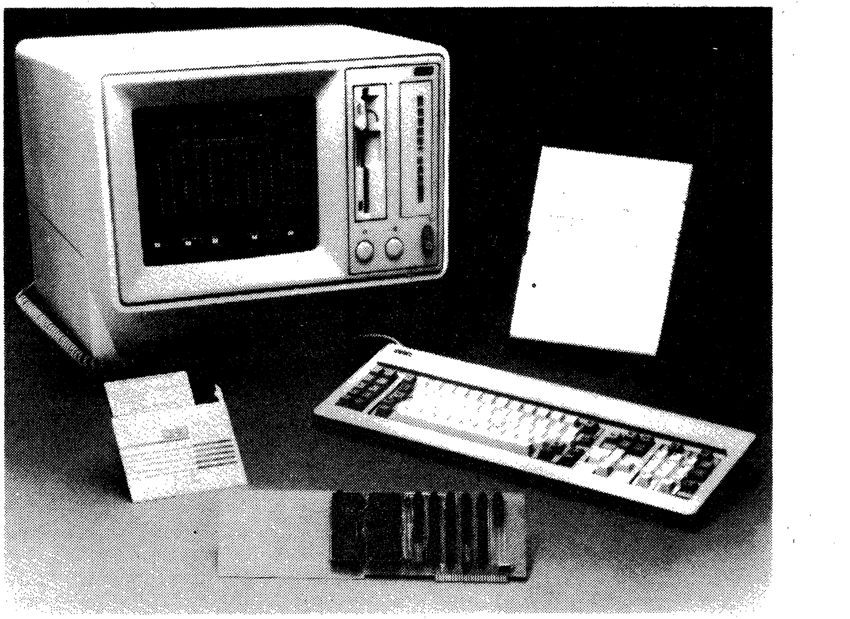

The NCR 45GDS1: The GAPP PC Development System for IBM and IBM compatible personal computers.

Copyright © 1985 by NCR Corporation, Dayton, Ohio, U.S.A.
All Rights Reserved. Printed in the U.S.A.

CONTACT: DSP Product Marketing
2001 Danfield Ct., Ft. Collins, CO 80525
PHONE: 303/226-9500 TELEX: 454505 NCR MICRO FTCN

Panasonic
NMOS MEMORY
Panasonic

DIGITAL INTEGRATED CIRCUITS DATA

MN41256

DIGITAL

Panasonic Industrial Co.

MN41256 262,144-word × 1-bit NMOS Dynamic RAM

Descriptions

The MN41256 is a 263,144-word by 1-bit Dynamic Random Access Memory in a 16 lead 300 mil. dual-in-line Plastic Package. The design is optimised for high-speed, high-performance applications such as mainframe memory, buffer memory and environments where low power dissipation and compact layout is required.

Clock timing requirements are non-critical, and power supply tolerance is very wide.

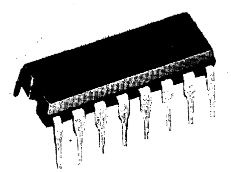

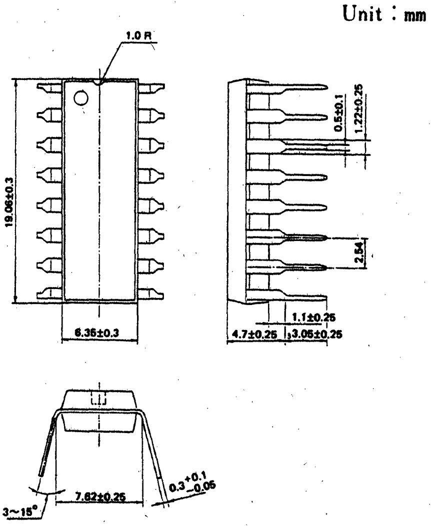

16-Lead Dual-In-Line Plastic Package

Features

- 262,144-word x 1-bit
- High Speed and Low power

Family / Parameter	MN41256-12	MN41256-15
Max. Access Time	120 ns	150 ns
Min. Cycle Time	220 ns	260 ns
Max. Standby Power	27.5 mW	27.5 mW
Max. Active Power	457 mW	385 mW

- Single 5V, ±10% tolerance
- Common I/O Capability using Early Write operation
- Page Mode, Read-Modify-Write capability
- $\overline{\text{RAS}}$-Only-Refresh, Hidden Refresh capability
- TTL compatible inputs/outpus
- 256 refresh cycle/4 ms
- Standard 16-Pin DIP
- t_{CAC}: t_{RCD} = 1 : 1

The device specifications are subject to change without prior notice. While every precaution has been taken in the preparation of this data sheet, the publisher assumes no responsibility for patent liability with respect to the use of the information contained herein.

MATSUSHITA ELECTRONICS CORPORATION SEMICONDUCTOR DIVISION

Block Diagram

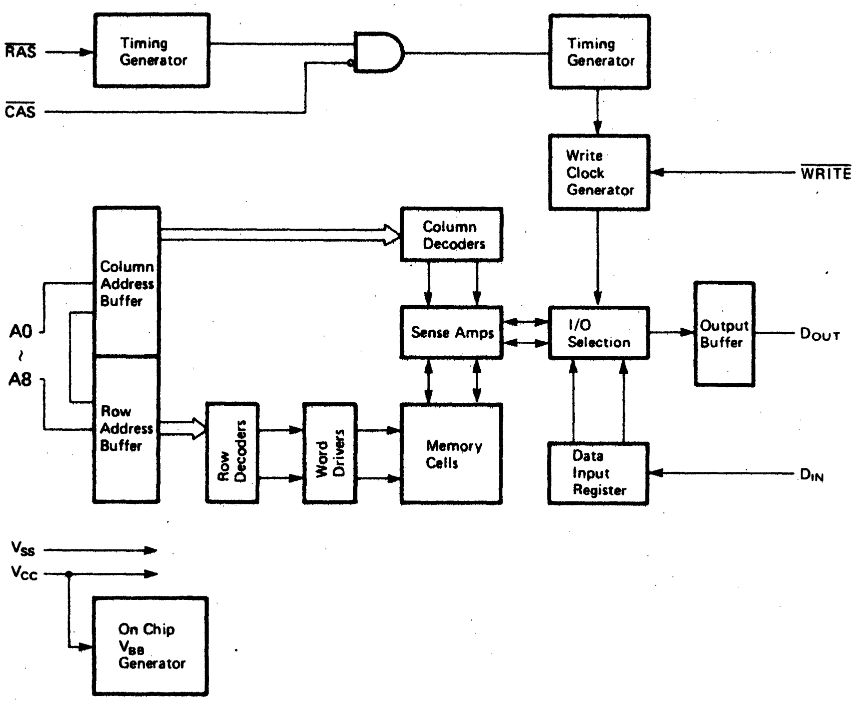
RAS
CAS
Timing Generator
Timing Generator
Write Clock Generator
WRITE
Column Address Buffer
Column Decoders
A0
~
A8
Sense Amps
I/O Selection
Output Buffer
DOUT
Row Address Buffer
Row Decoders
Word Drivers
Memory Cells
Data Input Register
DIN
VSS
VCC
On Chip VBB Generator

Pin Assignment (Top View)

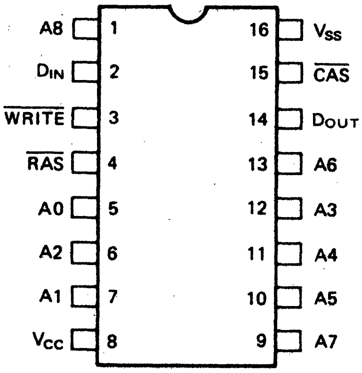
A8 1
DIN 2
WRITE 3
RAS 4
A0 5
A2 6
A1 7
VCC 8
16 VSS
15 CAS
14 DOUT
13 A6
12 A3
11 A4
10 A5
9 A7

Pin Names	Function
A0 ~ A8	Address Inputs
$\overline{RAS}$	Row Address Strobe
$\overline{CAS}$	Column Address Strobe
$\overline{WRITE}$	Write Enable
D_{IN}	Data Input
D_{OUT}	Data Output
V_{CC}	Power (+5V)
V_{SS}	Ground (0V)

Absolute Maximum Ratings (Ta = 25°C)

Rating	Symbol	Value	Unit
Voltage on any Pin relative to V_{SS}	V_{IN}, V_{OUT}	–1.0 to + 7.0	V
Voltage on V_{CC} Supply relative to V_{SS}	V_{CC}	–1.0 to + 7.0	V
Operating Temperature	T_{OP}	0 to + 70	°C
Storage Temperature	T_{stg}	–55 to +150	°C
Power Dissipation	P_D	1	W
Short Circuit Current	I_{OS}	50	mA

Recommended Operating Conditions (Referenced to V_{SS})

Parameter	Symbol	Min	Typ	Max	Unit	Temperature
Supply Voltage	V_{CC}	4.5	5.0	5.5	V	0°C to +70°C
	V_{SS}	0	0	0	V	
Input High Voltage, all inputs	V_{IH}	2.4	–	$V_{CC}+1.0V$	V	
Input Low Voltage, all inputs	V_{IL}	–1.0	–	0.8	V	

Capacitance (Ta = 25°C, V_{CC} = 5V±10%, f = 1MHz)

Parameter	Symbol	Min	Typ	Max	Unit
Input Capacitance (A0~A8, D_{IN})	C_{IN1}	–	–	7	pF
Input Capacitance ($\overline{RAS}$, $\overline{CAS}$ $\overline{WRITE}$)	C_{IN2}	–	–	8	pF
Output Capacitance (D_{OUT})	C_{OUT}	–	–	7	pF

DC Characteristics (Recommended operating conditions unless otherwise noted.)

Parameter		Symbol	Min	Typ	Max	Unit	Notes
Operating Current Average power supply current ($\overline{RAS}$, $\overline{CAS}$ cycling; t_{RC}=min)	MN41256-12	I_{CC1}	–	–	83	mA	1)
	MN41256-15		–	–	70		
Standby Current Average power supply current ($\overline{RAS}$=$\overline{CAS}$=V_{IH})		I_{CC2}	–	–	5	mA	
Refrech Current Average power supply current ($\overline{RAS}$ cycling, $\overline{CAS}$=V_{IH}; t_{FC}=min)	MN41256-12	I_{CC3}	–	–	65	mA	1)
	MN41256-15		–	–	55		
Page Mode Current Average power supply current ($\overline{RAS}$=V_{IL}, $\overline{CAS}$ cycling; t_{PC}=min)	MN41256-12	I_{CC4}	–	–	65	mA	1)
	MN41256-15		–	–	55		
Input Leakage Current Input leakage current, any input ($0V \leqq V_{IN} \leqq 5.5V$, all other pins not under test=0V)		I_{LI}	–10	0.1	10	μA	
Output Leakage Current (Data out is disabled, $0V \leqq V_{OUT} \leqq 5.5V$)		I_{LO}	–10	0.1	10	μA	
Output Level Output low voltage (I_{OL}=4.2mA)		V_{OL}	–	–	0.4	V	
Output Level Output high voltage (I_{OH}=–5mA)		V_{OH}	2.4	–	–	V	

Note: 1) I_{CC1}, I_{CC3}, I_{CC4} depend on cycle rates and output loadings. Specifications are for no load.

AC Characteristics[1) 2)] (Recommended operating conditions unless otherwise noted.)

Parameter	Symbol	Unit	MN41256-12		MN41256-15		Note
			Min.	Max.	Min.	Max.	
Refresh period	t_{REF}	ms	–	4	–	4	
Random read or write cycle time	t_{RC}	ns	220	–	260	–	
Read-write cycle time	t_{RWC}	ns	255	–	295	–	
Page mode cycle time	t_{PC}	ns	115	–	135	–	
Access time form $\overline{\text{RAS}}$	t_{RAC}	ns	–	120	–	150	4)6)8)
Access time from $\overline{\text{CAS}}$	t_{CAC}	ns	–	60	–	75	5)6)8)
Output buffer turn-off delay	t_{OFF}	ns	0	30	0	40	7)
Transition time	t_T	ns	3	50	3	50	3)
$\overline{\text{RAS}}$ precharge time	t_{RP}	ns	90	–	100	–	
$\overline{\text{RAS}}$ precharge time referenced to $\overline{\text{CAS}}$	t_{RPC}	ns	0	–	0	–	
$\overline{\text{RAS}}$ pulse width	t_{RAS}	ns	120	10000	150	10000	
$\overline{\text{RAS}}$ hold time	t_{RSH}	ns	60	–	75	–	
$\overline{\text{CAS}}$ precharge time	t_{CP}	ns	45	–	50	–	
$\overline{\text{CAS}}$ precharge time (except page mode cycle)	t_{CPN}	ns	25	–	25	–	
$\overline{\text{CAS}}$ pulse width	t_{CAS}	ns	60	10000	75	10000	
$\overline{\text{CAS}}$ hold time	t_{CSH}	ns	120	–	150	–	
$\overline{\text{RAS}}$ to $\overline{\text{CAS}}$ delay time	t_{RCD}	ns	25	60	25	75	8)
$\overline{\text{CAS}}$ to $\overline{\text{RAS}}$ precharge time	t_{CRP}	ns	0	–	0	–	
Row address set-up time	t_{ASR}	ns	0	–	0	–	
Row address hold time	t_{RAH}	ns	15	–	15	–	
Column address set-up time	t_{ASC}	ns	0	–	0	–	
Column address hold time	t_{CAH}	ns	20	–	25	–	
Read command set-up time	t_{RCS}	ns	0	–	0	–	
Read command hold time	t_{RCH}	ns	0	–	0	–	
Write command set-up time	t_{WCS}	ns	0	–	0	–	10)
Write command hold time	t_{WCH}	ns	25	–	30	–	
Write command pulse width	t_{WP}	ns	25	–	30	–	
Write command to $\overline{\text{RAS}}$ lead time	t_{RWL}	ns	40	–	45	–	
Write command to $\overline{\text{CAS}}$ lead time	t_{CWL}	ns	40	–	45	–	
Data-in set-up time	t_{DS}	ns	0	–	0	–	9)
Data-In hold time	t_{DH}	ns	25	–	30	–	9)
$\overline{\text{CAS}}$ to $\overline{\text{WRITE}}$ delay	t_{CWD}	ns	50	–	60	–	10)
$\overline{\text{RAS}}$ to $\overline{\text{WRITE}}$ delay	t_{RWD}	ns	110	–	135	–	10)
Read command hold time referenced to $\overline{\text{RAS}}$	t_{RRH}	ns	20	–	20	–	

Note:

1) Several cycles are required after power up or prolonged periods of $\overline{RAS}$ inactivity (4 ms) before proper device operation is achieved. Any 8 cycles which perform refresh are adequate for this purpose.
2) AC measurements assume t_T = 5.0 ns.
3) V_{IH} and V_{IL} are reference levels for measuring signal timings and transition times.
4) Assumes that $t_{RCD} \leqq t_{RCD}$ (Max).
5) Assumes that $t_{RCD} \geqq t_{RCD}$ (Max).
6) Measure with load equivalent to 2 TTL loads and 100pF.
7) t_{OFF} defines the time at which the output enters high impedance state. It is not referenced to levels of V_{IH} and V_{IL}.
8) Operation within the t_{RCD} (Max) limit ensures that t_{RAC} (Max) can be met. t_{RCD} is specified as a reference point only; if t_{RCD} is greater than the specifed t_{RCD} limit, then row access time is $t_{RCD} + t_{CAC}$.
9) These parameters are referenced to leading edge of $\overline{CAS}$ (Early-Write) or $\overline{WRITE}$ (Delayed-Write or Read-Modify-Write) whichever occurs last.
10) t_{WCS}, t_{CWD} and t_{RWD} are not restrictive operating parameters. They are included under AC Characteristics as electrical characteristics only. If $t_{WCS} \geqq t_{WCS}$ (Min), the cycle is an Early-Write cycle and the data out pins will remain open circuit (high impedance) throughout the entire cycle. If $t_{CWD} \geqq t_{CWD}$ (Min) and $t_{RWD} \geqq t_{RWD}$ (Min), the cycle is a Read-Modify-Write cycle and the data out will contain data read from the selected cell. If neither of the above sets of conditions is satisfied, the condition of the data out (at access time) is indeterminate.

READ CYCLE

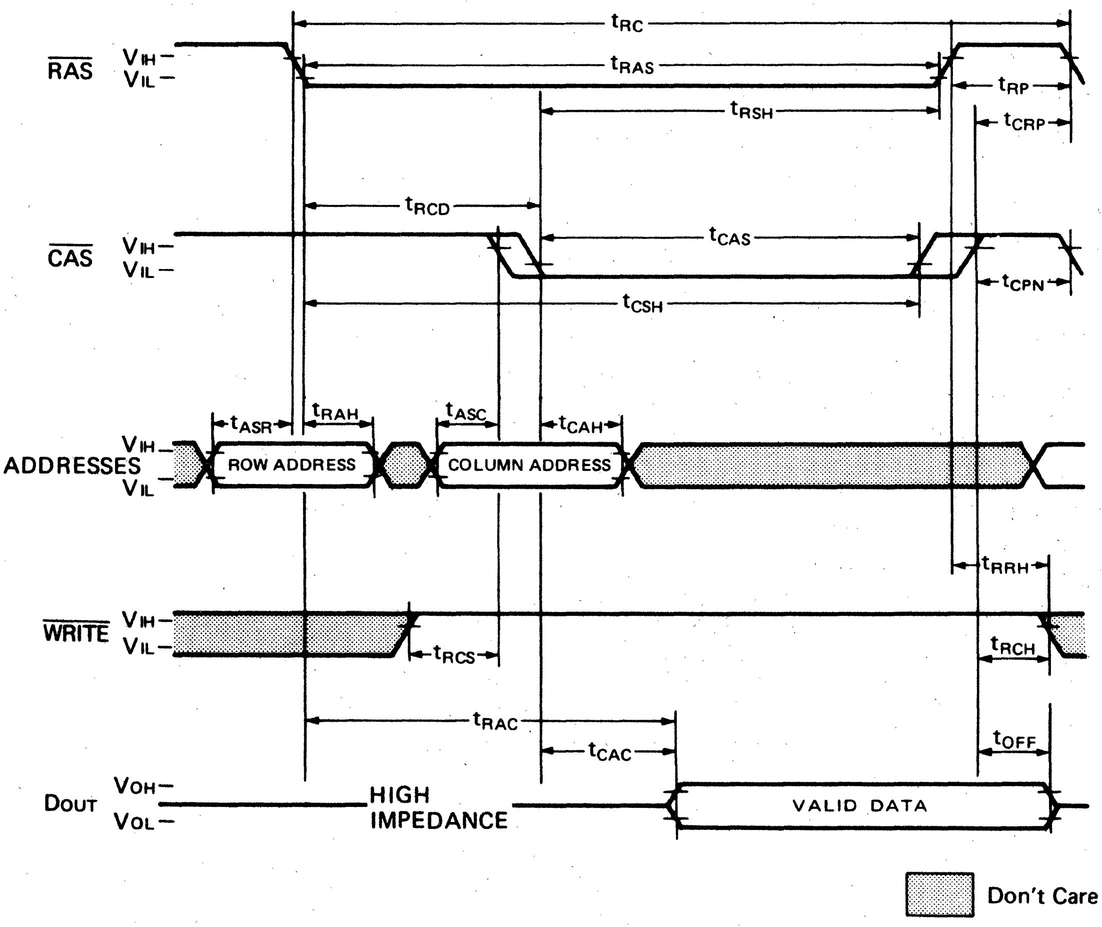
$\overline{RAS}$
VIH
VIL
tRC
tRAS
tRP
tRSH
tCRP
tRCD
$\overline{CAS}$
VIH
VIL
tCAS
tCSH
tCPN
tASR
tRAH
tASC
tCAH
ADDRESSES
VIH
VIL
ROW ADDRESS
COLUMN ADDRESS
tRRH
$\overline{WRITE}$
VIH
VIL
tRCS
tRCH
tRAC
tCAC
tOFF
DOUT
VOH
VOL
HIGH IMPEDANCE
VALID DATA
▨ Don't Care

WRITE CYCLE (EARLY WRITE)

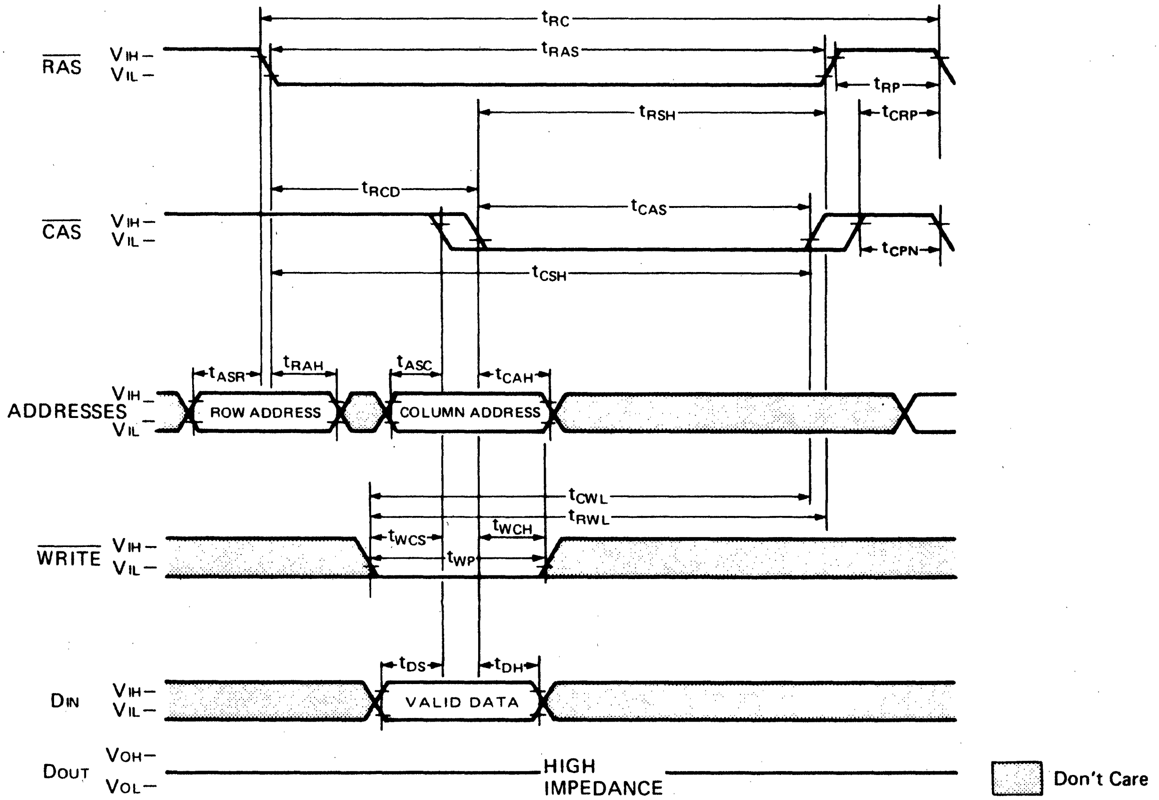
tRC
tRAS
RAS VIH– VIL–
tRP
tRSH
tCRP
tRCD
tCAS
CAS VIH– VIL–
tCPN
tCSH
tASR
tRAH
tASC
tCAH
ADDRESSES VIH VIL
ROW ADDRESS
COLUMN ADDRESS
tCWL
tRWL
tWCS
tWCH
tWP
WRITE VIH– VIL–
tDS
tDH
DIN VIH– VIL–
VALID DATA
DOUT VOH– VOL–
HIGH IMPEDANCE
Don't Care

READ-WRITE/READ-MODIFY-WRITE CYCLE

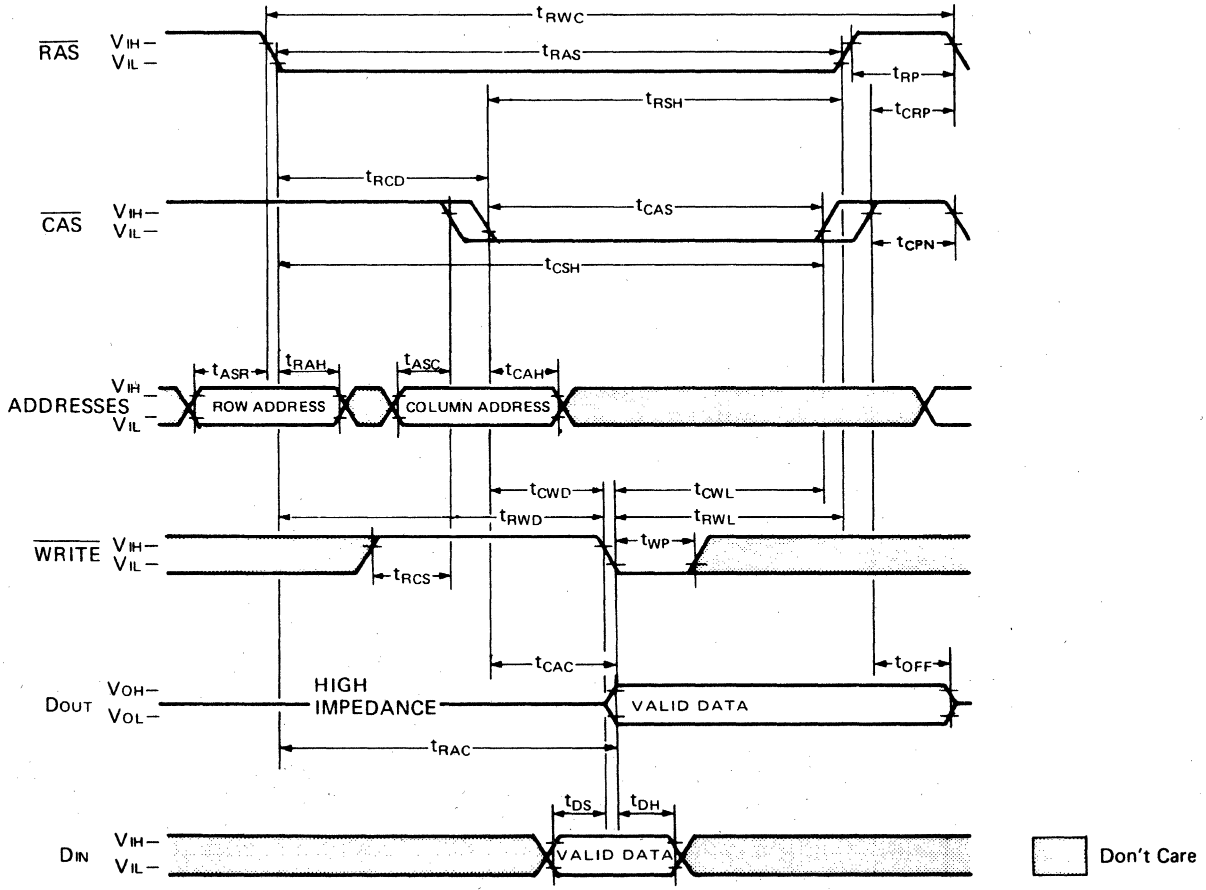
tRWC
RAS VIH– VIL–
tRAS
tRP
tRSH
tCRP
tRCD
tCAS
CAS VIH– VIL–
tCPN
tCSH
tASR
tRAH
tASC
tCAH
ADDRESSES VIH VIL
ROW ADDRESS
COLUMN ADDRESS
tCWD
tCWL
tRWD
tRWL
WRITE VIH– VIL–
tWP
tRCS
tCAC
tOFF
DOUT VOH– VOL–
HIGH IMPEDANCE
VALID DATA
tRAC
tDS
tDH
DIN VIH– VIL–
VALID DATA
Don't Care

PAGE MODE READ CYCLE

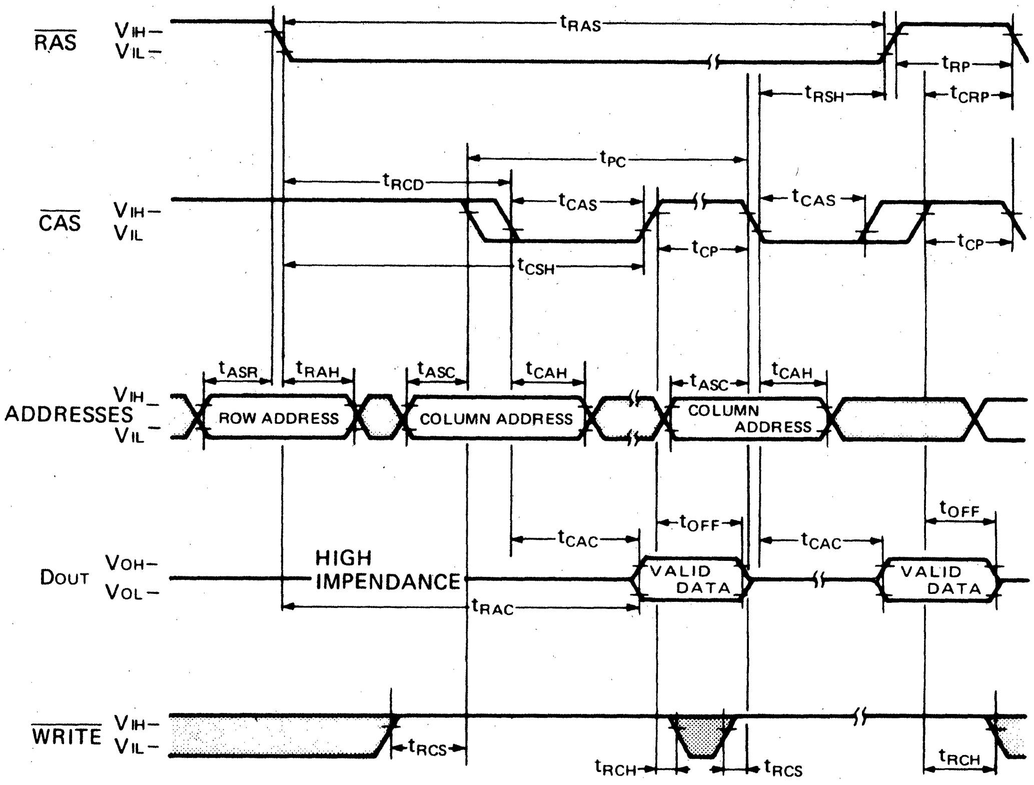
RAS
VIH–
VIL–
tRAS
tRP
tRSH
tCRP
tPC
tRCD
tCAS
tCAS
CAS
VIH–
VIL
tCP
tCP
tCSH
tASR
tRAH
tASC
tCAH
tASC
tCAH
ADDRESSES
VIH
VIL
ROW ADDRESS
COLUMN ADDRESS
COLUMN ADDRESS
tOFF
tOFF
tCAC
tCAC
DOUT
VOH–
VOL–
HIGH IMPENDANCE
VALID DATA
VALID DATA
tRAC
WRITE
VIH–
VIL–
tRCS
tRCH
tRCS
tRCH

▨ Don't Care

PAGE MODE WRITE CYCLE

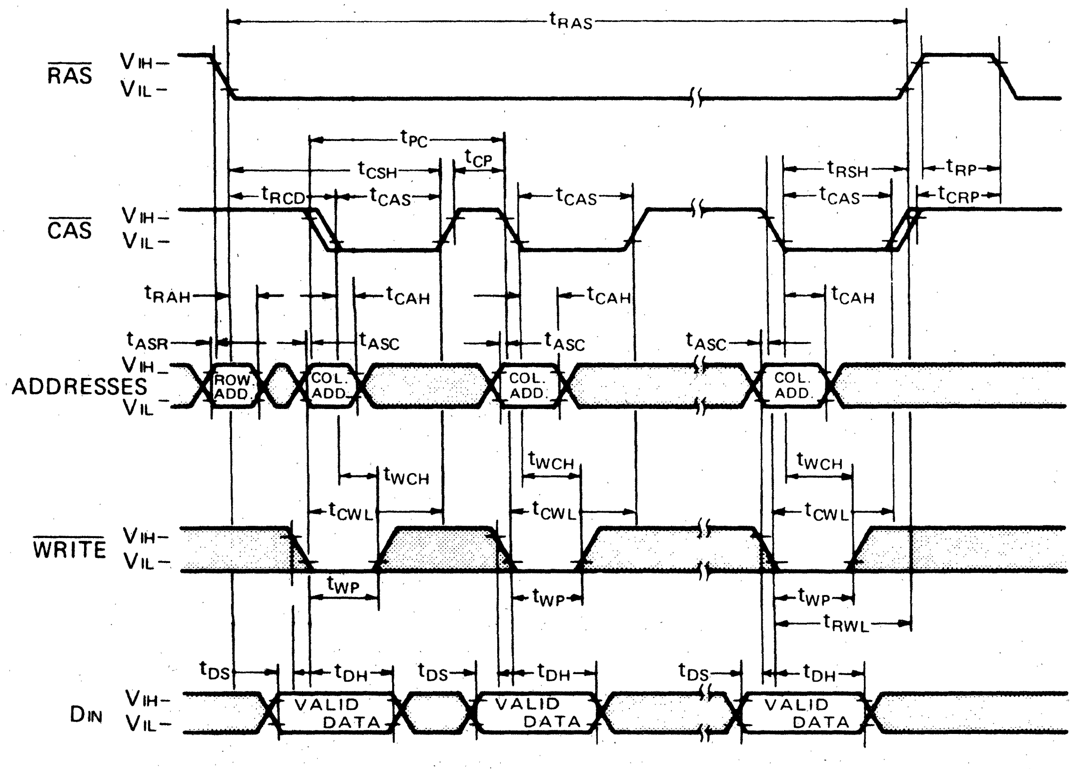
tRAS
RAS
VIH–
VIL–
tPC
tCSH
tCP
tRSH
tRP
tRCD
tCAS
tCAS
tCAS
tCRP
CAS
VIH–
VIL–
tRAH
tCAH
tCAH
tCAH
tASR
tASC
tASC
tASC
ADDRESSES
VIH
VIL
ROW ADD.
COL. ADD.
COL. ADD.
COL. ADD.
tWCH
tWCH
tWCH
tCWL
tCWL
tCWL
WRITE
VIH–
VIL–
tWP
tWP
tWP
tRWL
tDS
tDH
tDS
tDH
tDS
tDH
DIN
VIH–
VIL–
VALID DATA
VALID DATA
VALID DATA

▨ Don't Care

"$\overline{\text{RAS}}$ ONLY" REFRESH CYCLE

Note: $\overline{\text{WRITE}}$ = Don't Care

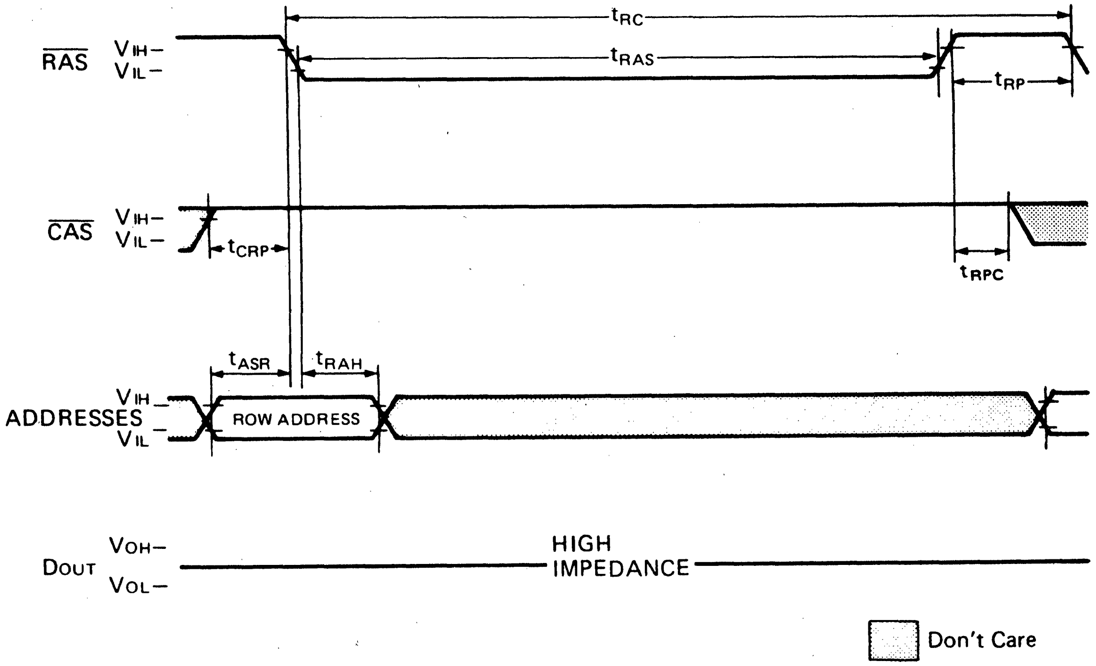
tRC
RAS VIH– VIL–
tRAS
tRP
CAS VIH– VIL–
tCRP
tRPC
tASR
tRAH
ADDRESSES VIH VIL
ROW ADDRESS
DOUT VOH– VOL–
HIGH IMPEDANCE
Don't Care

HIDDEN REFRESH CYCLE

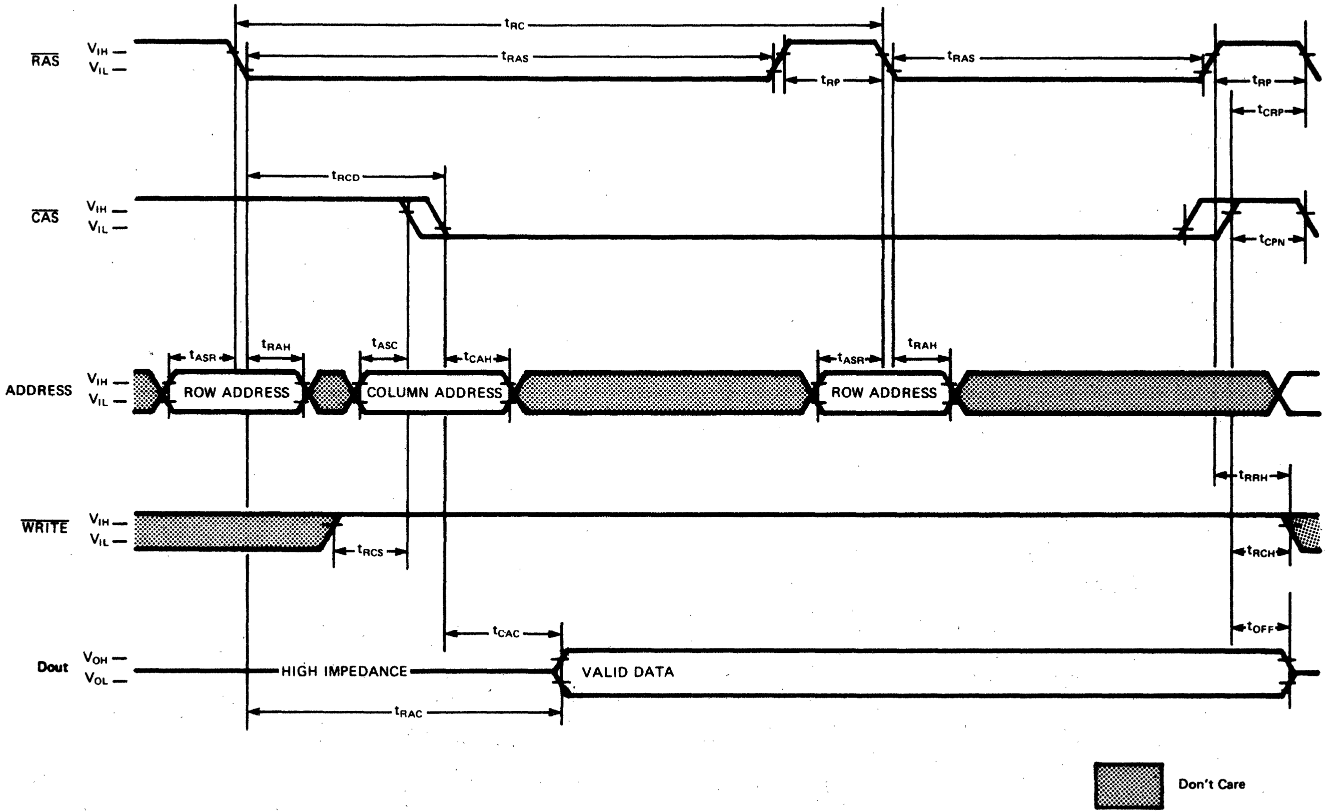
RAS VIH VIL
tRC
tRAS
tRP
tRAS
tRP
tCRP
CAS VIH VIL
tRCD
tCPN
ADDRESS VIH VIL
tASR
tRAH
tASC
tCAH
tASR
tRAH
ROW ADDRESS
COLUMN ADDRESS
ROW ADDRESS
tRRH
WRITE VIH VIL
tRCS
tRCH
tCAC
tOFF
Dout VOH VOL
HIGH IMPEDANCE
VALID DATA
tRAC
Don't Care

CMOS Digital Logic Integrated Circuits

The RCA CMOS product line covers a broad range of SSI, MSI, and LSI functions from simple gates to complex counters, registers, and arithmetic circuits, and includes both standard circuit types for commercial and industrial applications and high-reliability slash (/) series types for aerospace, military, and critical industrial applications.

Following its tradition of leadership in CMOS, RCA offers a comprehensive line of high-voltage ("B"-series) CMOS digital integrated circuits which meet, in all respects, the industry standard specifications established by JEDEC.

CMOS High-Voltage B-Series Integrated Circuits

Standardized Electrical Characteristics (Static)

CHARACTERISTIC	CONDITIONS			LIMITS AT INDICATED TEMPERATURES (°C) Values at -55, +25, +125 Apply to D,F,H,K Packages Values at -40, +25, +85 Apply to E Package							UNITS
								+25			
	V_O (V)	V_{IN} (V)	V_{DD} (V)	-55	-40	+85	+125	Min.	Typ.	Max.	
Quiescent Device	—	0, 5	5	0.25	0.25	7.5	7.5	—	0.01	0.25	μA
Current, I_{DD} Max.	—	0, 10	10	0.5	0.5	15	15	—	0.01	0.5	
Gates,	—	0, 15	15	1	1	30	30	—	0.01	1	
Inverters	—	0, 20	20	5	5	150	150	—	0.02	5	
Buffers, Flip-Flops,		0, 5	5	1	1	30	30	—	0.02	1	
Latches, Multi-		0, 10	10	2	2	60	60	—	0.02	2	
Level Gates		0, 15	15	4	4	120	120	—	0.02	4	
(MSI-1 Types)		0, 20	20	20	20	600	600	—	0.04	20	
Complex Logic		0, 5	5	5	5	150	150	—	0.04	5	
(MSI-2 Types)		0, 10	10	10	10	300	300	—	0.04	10	
		0, 15	15	20	20	600	600	—	0.04	20	
		0, 20	20	100	100	3000	3000	—	0.08	100	
Output Low	0.4	0, 5	5	0.64	0.61	0.42	0.36	0.51	1	—	mA
(Sink) Current	0.5	0, 10	10	1.6	1.5	1.1	0.9	1.3	2.6	—	
I_{OL} Min.	1.5	0, 15	15	4.2	4	2.8	2.4	3.4	6.8	—	
Output High	4.6	0, 5	5	-0.64	-0.61	-0.42	-0.36	-0.51	-1	—	
(Source)	2.5	0, 5	5	-2	-1.8	-1.3	-1.15	-1.6	-3.2	—	
Current,	9.5	0, 10	10	-1.6	-1.5	-1.1	-0.9	-1.3	-2.6	—	
I_{OH} Min.	13.5	0, 15	15	-4.2	-4	-2.8	-2.4	-3.4	-6.8	—	
Output Voltage:	—	0, 5	5	0.05				—	0	0.05	V
Low-Level,	—	0, 10	10	0.05				—	0	0.05	
V_{OL} Max.	—	0, 15	15	0.05				—	0	0.05	
Output Voltage:	—	0, 5	5	4.95				4.95	5	—	
High-Level	—	0, 10	10	9.95				9.95	10	—	
V_{OH} Min.	—	0, 15	15	14.95				14.95	15	—	
Input Low	0.5, 4.5	—	5	1.5				—	—	1.5	
Voltage, V_{IL} Max.	1, 9	—	10	3				—	—	3	
B Types	1.5, 13.5	—	15	4				—	—	4	
UB Types	0.5, 4.5	—	5	1				—	—	1	
	1, 9	—	10	2				—	—	2	
	1.5, 13.5	—	15	2.5				—	—	2.5	
Input High	0.5, 4.5	—	5	3.5				3.5	—	—	
Voltage, V_{IH} Min.	1, 9	—	10	7				7	—	—	
B Types	1.5, 13.5	—	15	11				11	—	—	
UB Types	0.5, 4.5	—	5	4				4	—	—	
	1, 9	—	10	8				8	—	—	
	1.5, 13.5	—	15	12.5				12.5	—	—	
Input Current, I_{IN} Max.	—	0, 18	18	±0.1	±0.1	±1	±1	—	$\pm10^{-5}$	±0.1	μA
3-State Output Leakage Current, I_{OUT} Max.	0, 18	0, 18	18	±0.4	±0.4	±12	±12	—	$\pm10^{-4}$	±0.4	

FOR COMPLETE DATA SHEET, Call 800-443-0100, Ext. 518

CMOS Function Selection Chart

Function	Type No.	No. of Pins
Gates		
NOR/NAND		
Dual 4-input NOR	**CD4002B**	14
	CD4002UB	14
	CD4002A	14
Dual 4-input NAND	**CD4012B**	14
	CD4012UB	14
	CD4012A	14
Triple 3-input NOR	**CD4025B**	14
	CD4025UB	14
	CD4025A	14
Triple 3-input NAND	**CD4023B**	14
	CD4023UB	14
	CD4023A	14
Quad 2-input NOR	**CD4001B**	14
	CD4001UB	14
	CD4001A	14
Quad-2 input NAND	**CD4011B**	14
	CD4011UB	14
	CD4011A	14
8-input NOR/OR	**CD4078B**	14
8-input NAND/AND	**CD4068B**	14
Dual 3-input NOR plus inverter	**CD4000B**	14
Dual 2-input NAND buffer/driver	**CD40107B**	8,14
OR/AND		
Dual 4-input OR	**CD4072B**	14
Dual 4-input AND	**CD4082B**	14
Triple 3-input OR	**CD4075B**	14
Triple 3-input AND	**CD4073B**	14
Quad 2-input OR	**CD4071B**	14
Quad 2-input AND	**CD4081B**	14
Buffers and Inverters		
Dual complementary pair plus inverter	**CD4007UB**	14
	CD4007A	14
Hex inverter	**CD4069UB**	14
Hex inverter/buffer (3-state)	**CD4502B**	16
Hex buffer (3-state non-inverting)	**CD4503B**	16
Hex buffer/converter (inverting)	**CD4009UB**	16
	CD4009A	16
Hex buffer/converter (inverting)	**CD4049UB**	16
	CD4049A	16
Hex buffer/converter (non-inverting)	**CD4010B**	16
	CD4010A	16
Hex buffer/converter (non-inverting)	**CD4050B**	16
	CD4050A	16
Quad true/complement buffer	**CD4041UB**	14
	CD4041A	14
Dual 2-input NAND buffer/driver	**CD40107B**	8,14
Multifunction/AOI		
Triple AND-OR bi-phase pairs	**CD4037A**	14
Quad exclusive-OR	**CD4030B**	14
	CD4030A	14
Quad exclusive-OR	**CD4070B**	14
Quad exclusive-NOR	**CD4077B**	14

Function	Type No.	No. of Pins
Gates (cont'd)		
Multifunction/AOI (cont'd)		
Quad AND/OR Select	**CD4019B**	16
	CD4019A	16
Dual 2-wide, 2-input AND/OR invert (AOI)	**CD4085B**	14
Expandable 4-wide, 2-input AND/OR invert (AOI)	**CD4086B**	14
Multifunctional expandable 8-input (3-state output)	**CD4048B**	16
	CD4048A	16
Decoders/Encoders		
BCD-to-decimal decoder	**CD4028B**	16
	CD4028A	16
8-input priority encoder	**CD4532B**	16
10-line to 4-line BCD priority encoder	**CD40147B**	16
4-bit latch/4-to-16 line decoder (outputs high)	**CD4514B**	24
4-bit latch/4-to-16 line decoder (outputs low)	**CD4515B**	24
Dual 1-of-4 decoder/demultiplexer (outputs high)	**CD4555B**	16
Dual 1-of-4 decoder/demultiplexer (outputs low)	**CD4556B**	16
Schmitt Trigger		
Quad 2-input NAND	**CD4093B**	14
Hex	**CD40106B**	14
Interface		
Quad low-to-high voltage	**CD40109B**	16
Hex high-to-low voltage (inverting)	**CD4009UB**	16
	CD4009A	16
	CD4049UB	16
	CD4049A	16
Hex high-to-low voltage (non-inverting)	**CD4010B**	16
	CD4010A	16
	CD4050B	16
	CD4050A	16
Dual 2-input NAND buffer/driver	**CD40107B**	8,14
8-bit bidirectional CMOS-to-TTL level converter	**CD40115 ▽ #**	22
8-bit bidirectional CMOS-to-TTL level converter	**CD40116 ▽ #**	22
Programmable dual 4-bit terminator	**CD40117B▽**	14
A/D Converters		
Video-speed 6-bit flash A/D converter	**CA3300**	18
Video-speed 8-bit flash A/D converter	**CA3308**	24
Multivibrators		
Monostable/astable	**CD4047B**	14
	CD4047A	14
Dual monostable	**CD4098B**	16
Dual precision monostable	**CD4538B**	16

▽Indicates types designed for special applications. Ratings and characteristics data for these types differ in some aspects from the standardized data for A- and B-series types.
#CMOS/SOS device.

CMOS Function Selection Chart

Function	Type No.	No. of Pins
Multivibrators (cont'd)		
Flip-Flops		
Dual "D" with set/reset capability	CD4013B	14
	CD4013A	14
Dual "J-K" with set/reset capability	CD4027B	16
	CD4027A	16
Gated "J-K" (non-inverting)	CD4095B	14
Gated "J-K" (inverting and non-inverting)	CD4096B	14
Hex "D"	CD40174B	16
4-bit "D" with 3-state outputs	CD4076B	14
Quad "D"	CD40175B	16
Latches		
Quad clocked "D"	CD4042B	16
	CD4042A	16
Quad NOR R/S (3-state outputs)	CD4043B	16
	CD4043A	16
Quad NAND R/S (3-state outputs)	CD4044B	16
	CD4044A	16
Dual 4-bit	CD4508B	24
8-bit addressable	CD4099B	16
	CD4724B	16
Registers		
Shift Registers-Static		
Dual 4-stage with serial input/parallel output	CD4015B	16
	CD4015A	16
18-stage	CD4006B	14
64-stage	CD4031B	16
Dual 64-bit	CD4517B	16
8-stage with synchronous parallel or serial input/serial output	CD4014B	16
8-stage with asynchronous parallel input or synchronous serial input/serial output	CD4021B	16
	CD4021A	16
4-stage parallel-in/parallel-out with J-K input and true/complement output	CD4035B	16
4-bit universal bidirectional with 3-state outputs	CD40104B	16
4-bit universal bidirectional with asynchronous master reset	CD40194B	16
8-stage bidirectional parallel or serial input/parallel output	CD4034B	24
32-bit left/right	CD40100B	16
8-stage shift-and-store bus	CD4094B	16
Shift Registers-Dynamic		
200-stage	CD4062A	12
Storage Registers		
8-bit addressable latch	CD4099B	16
	CD4724B	16
4-bit "D"-type with 3-state outputs	CD4076B	16
4 X 4 Multiport	CD40108B	24
4 X 4 Multiport	CD40208B	24
FIFO Buffer Registers		
4-bit X 16 word	CD40105B	16

Function	Type No.	No. of Pins
Counters		
Binary Ripple		
7-stage	CD4024B	14
	CD4024A	14
12-stage	CD4040B	16
	CD4040A	16
14-stage	CD4020B	16
	CD4020A	16
14-stage counter/divider and oscillator	CD4060B	16
	CD4060A	16
Timers		
21-stage	CD4045B	14
Programmable	CD4536B	16
	CD4541B	14
Synchronous		
Decade counter/divider plus 10 decoded decimal outputs	CD4017B	16
	CD4017A	16
Divide-by-8 counter/divider with 8 decimal outputs	CD4022B	16
	CD4022A	16
Presettable divide-by-"N" counter, fixed or programmable	CD4018B	16
	CD4018A	16
Programmable-divide-by-"N" counter	CD4059A	24
Presettable up/down counter, binary or BCD-decade	CD4029B	16
	CD4029A	16
Presettable 4-bit BCD up/down counter	CD4510B	16
Presettable 4-bit binary up/down counter	CD4516B	16
Presettable 2-decade BCD down counter	CD40102B	16
Presettable 8-bit binary down counter	CD40103B	16
Presettable 4-bit BCD up/down counter	CD40192B	16
Presettable 4-bit binary up/down counter	CD40193B	16
Dual BCD up counter	CD4518B	16
Dual binary up counter	CD4520B	16
Decade counter/asynchronous clear	CD40160B	16
Binary counter/asynchronous clear	CD40161B	16
Decade counter/synchronous clear	CD40162B	16
Binary counter/synchronous clear	CD40163B	16
Display Drivers		
With Counter		
Decade counter/divider with 7-segment display outputs and display enable	CD4026B	16
Decade counter/divider with 7-segment display outputs and ripple blanking	CD4033B	16
Up/Down Counter-Latch-Decoder-Driver	CD40110B	16

CMOS Function Selection Chart

Function	Type No.	No. of Pins
Display Drivers (cont'd)		
For Liquid-Crystal-Display Drive		
4-segment display driver	**CD4054B**	16
BCD-to-7-segment decoder/driver with "display-frequency" output	**CD4055B**	16
BCD-to-7-segment decoder/driver with strobed-latch function	**CD4056B**	16
	CD4543B	16
4-digit decoder/driver with hexidecimal display	**CD22104**∇	40
4-digit decoder/driver with decimal display	**CD22104A** ∇	40
4-digit decoder/driver with hexidecimal display	**CD22105** ∇	40
4-digit decoder/driver with decimal display	**CD22105A** ∇	40
For Light-Emitting-Diode Drive		
BCD-to-7-segment latch decoder/driver	**CD4511B**	16
Multiplexers/Demultiplexers		
Analog		
Triple 2-channel	**CD4053B**	16
Differential 4-channel	**CD4052B**	16
Single 8-channel	**CD4051B**	16
Differential 8-channel	**CD4097B**	24
Single 16-channel	**CD4067B**	24
Quad bilateral switch	**CD4016B**	14
	CD4016A	14
Quad bilateral switch	**CD4066B**	14
	CD4066A	14
Digital (Data Selectors)		
Quad AND/OR select	**CD4019B**	16
	CD4019A	16
Dual 1-of-4 decoder/demultiplexer (outputs high)	**CD4555B**	16
Dual 1-of-4 decoder/demultiplexer (outputs low)	**CD4556B**	16
Quad 2-line-to-1-line	**CD40257B**	16
8-channel	**CD4512B**	16
Phase-Locked Loop		
Micropower	**CD4046B**	16
	CD4046A	16
Arithmetic Circuits		
Adders/Comparators		
4-bit full adder with parallel carry out	**CD4008B**	16
Triple serial adder, positive logic	**CD4032B**	16
Triple serial adder, negative logic	**CD4038B**	16
4-bit magnitude comparator	**CD4063B**	16
	CD4585B	16
Quad exclusive-OR gate	**CD4030B**	14
	CD4030A	14

Function	Type No.	No. of Pins
Arithmetic Circuits (Cont'd)		
Quad exclusive-OR gate	**CD4070B**	14
Quad exclusive-NOR gate	**CD4077B**	14
ALU/Rate Multipliers		
4-bit arithmetic logic unit	**CD40181B**	24
	CD4057A	28
BCD rate multiplier	**CD4527B**	16
Binary rate multiplier	**CD4089B**	16
Look-ahead-carry block	**CD40182B**	16
Parity Generator/Checker		
9-bit	**CD40101B**	14
Multiport Register		
4 X 4	**CD40108B**	24
4 X 4	**CD40208B**	24
8 X 1	**CD4034B**	24
8 X 1	**CD4034A**	24
Quad Bilateral Switches		
For transmission or multiplexing of analog or digital signals	**CD4016B**	14
	CD4016A	14
	CD4066B	14
	CD4066A	14
Industrial Controller		
16-channel precision timer/driver	**CD22401** ∇	40
Sync Generator		
TV Camera Sync Generator	**CD22402**	24
Telecommunication Circuits		
Crosspoint Switches		
4 X 4 crosspoint switch with control memory	**CD22100** ∇	16
4 X 4 X 2 crosspoint switch with control memory	**CD22101** ∇	24
4 X 4 X 2 crosspoint switch with control memory	**CD22102** ∇	24
HDB3 Transcoder		
HDB3 transcoder for 2.048/8.448 Mb/s transmission applications	**CD22103**∇	16
PCM Line Repeater		
PCM line repeater	**CD22301**∇	18
Timer/Driver		
16-channel precision timer/driver	**CD22401**∇	40
PCM Data Filters		
Pulse code modulation sampled-data filters	**CD22413**∇	16
	CD22414∇	16
Tone Generator		
Dual-tone multifrequency tone generator	**CD22859** ∇	16

∇ Indicates types designed for special applications. Ratings and characteristics data for these types differ in some aspects from the standardized data for A- and B-series types.

QMOS Digital Integrated Circuits

The QMOS line of high-speed CMOS products are functionally and pin compatible with many existing 54/74-series LSTTL bipolar products and 4000B-series CMOS digital logic types. QMOS products include a comprehensive set of buffers, transceivers, and registers that are popular in computer systems and a wide variety of popular logic MUX's, encoders/decoders, counters, arithmetic units, multivibrators, display drivers, and phase-locked loops.

Maximum Ratings, *Absolute-Maximum Values:*

DC SUPPLY-VOLTAGE, (V_{CC}):	
(Voltages referenced to ground)	-0.5 to +7 V
DC INPUT DIODE CURRENT, I_{IK} (FOR $V_I < -0.5$ V OR $V_I > V_{CC} +0.5$ V)	±20 mA
DC OUTPUT CURRENT, I_{OK} (FOR $V_O < -0.5$ V OR $V_O > V_{CC} +0.5$ V)	±20 mA
DC DRAIN CURRENT, PER OUTPUT (I_O) (FOR $-0.5 \text{ V} < V_O V_{CC} +0.5$ V):	
STANDARD OUTPUT	±25 mA
BUS DRIVER OUTPUT	±35 mA
DC V_{CC} OR GROUND CURRENT, PER PIN (I_{CC}):	
STANDARD OUTPUT	±50 mA
BUS DRIVER OUTPUT	±70 mA
POWER DISSIPATION PER PACKAGE (P_D):	
For T_A = -40 to +60°C (PACKAGE TYPE E)	500 mW
For T_A = +60 to +85°C (PACKAGE TYPE E)	Derate linearly at 8 mW/°C to 300 mW
For T_A = -55 to +100°C (PACKAGE TYPE F)	500 mW
For T_A = +100 to +125°C (PACKAGE TYPE F)	Derate Linearly at 8 mW/°C to 300 mW
OPERATING-TEMPERATURE RANGE (T_A):	
PACKAGE TYPE F	-55 to +125°C
PACKAGE TYPE E	-40 to +85°C
STORAGE TEMPERATURE (T_{stg})	-65 to +150°C
LEAD TEMPERATURE (DURING SOLDERING) FOR 10 s MAX.:	
At distance 1/16 ± 1/32 in. (1.59 ± 0.79 mm) from case for 10 s max.	+265°C
Unit inserted into a PC Board (min. thickness 1/16 in., 1.59 mm) with solder contacting lead tips only	+300°C

Static Electrical Characteristics for CD74HC/CD54HC and CD74HCT/CD54HCT Types*

CHARACTERISTIC	TEST CONDITIONS				V_{CC}	TEMPERATURE °C						UNITS
						54HC/74HC 54HCT/74HCT +25		74HC 74HCT -40 to +85		54HC 54HCT -55 to +125		
					V	Min.	Max.	Min.	Max.	Min.	Max.	
High-Level Input Voltage, (HC) V_{IH}					2	1.5	—	1.5	—	1.5	—	V
					4.5	3.15	—	3.15	—	3.15	—	
					6	4.2	—	4.2	—	4.2	—	
Low-Level Input Voltage, (HC) V_{IL}					2	—	0.3	—	0.3	—	0.3	V
					4.5	—	0.9	—	0.9	—	0.9	
					6	—	1.2	—	1.2	—	1.2	
High-Level Input Voltage, (HCT) V_{IH}					4.5 to 5.5	2	—	2	—	2	—	V
Low-Level Input Voltage, (HCT) V_{IL}					4.5 to 5.5	—	0.8	—	0.8	—	0.8	V
	V_I	I_O STD	I_O BUS	I_O UNIT								
High-Level Output Voltage, V_{OH}	V_{IH} or V_{IL}	-20	-20	μA	2	1.9	—	1.9	—	1.9	—	V
		-20	-20	μA	4.5#	4.4	—	4.4	—	4.4	—	
		-20	-20	μA	6	5.9	—	5.9	—	5.9	—	
		-4	-6	mA	4.5#	3.98	—	3.84	—	3.7	—	
		-5.2	-7.8	mA	6	5.48	—	5.34	—	5.2	—	
Low-Level Output Voltage, V_{OL}	V_{IH} or V_{IL}	20	20	μA	2	—	0.1	—	0.1	—	0.1	V
		20	20	μA	4.5#	—	0.1	—	0.1	—	0.1	
		20	20	μA	6	—	0.1	—	0.1	—	0.1	
		4	6	mA	4.5#	—	0.26	—	0.33	—	0.4	
		5.2	7.8	mA	6	—	0.26	—	0.33	—	0.4	
+Input Leakage Current, I_I	$V_I = V_{CC}$ or GND				6 (HC) 5.5 (HCT)	—	±0.1	—	±1	—	±1	μA
Analog Switch Off-State Current Per Channel, $I_{S(off)}$	$V_I = V_{IH}$ or V_{IL} $\lvert V_S \rvert = V_{CC}$ or $V_{CC}-V_{EE}$				6 (HC) 5.5 (HCT)	—	±0.1	—	±1	—	±1	μA
3-State Output Off-State Current, I_{OZ}	$V_I = V_{IH}$ or V_{IL} $V_O = V_{CC}$ or GND				6 (HC) 5.5 (HCT)	—	±0.5	—	±5	—	±10	μA
Quiescent Supply Current, I_{CC}	$V_I = V_{CC}$ or GND $I_O = 0$											μA
SSI					6 (HC) 5.5 (HCT)	—	2	—	20	—	40	
FF					6 (HC) 5.5 (HCT)	—	4	—	40	—	80	
MSI					6 (HC) 5.5 (HCT)	—	8	—	80	—	160	

*All specifications meet JEDEC Standard No. 7.　#HCT specified at 4.5 V only.　+For Transceivers use I_{OZ}.

QMOS Digital Integrated Circuits

Type	Function/Description	Classification
CD54/74	**NAND/NOR Gates**	
HC/HCT00	Quad 2-Input NAND Gate	SSI
HC/HCT02	Quad 2-Input NOR Gate	SSI
HC/HCT03	Quad 2-Input NAND Gate with Open Collector	SSI
HC/HCT10	Triple 3-Input NAND Gate	SSI
HC/HCT20	Dual 4-Input NAND Gate	SSI
HC/HCT27	Triple 3-Input NOR Gate	SSI
HC/HCT30	8-Input NAND Gate	SSI
HC/HCT4002	Dual 4-Input NOR Gate	SSI
	AND/OR/EXCLUSIVE-OR Gates	
HC/HCT08	Quad 2-Input AND Gate	SSI
HC/HCT11	Triple 3-Input AND Gate	SSI
HC/HCT21	Dual 4-Input AND Gate	SSI
HC/HCT32	Quad 2-Input OR Gate	SSI
HC/HCT86	Quad 2-Input EXCLUSIVE-OR Gate	SSI
HC/HCT4075	Triple 3-Input OR Gate	SSI
HC7266	Quad Exclusive NOR	SSI
	Inverters/Buffers/Bus Drivers	
HC/HCT04	Hex Inverter	SSI
HCU04	Hex Inverter (Unbuffered)	SSI
HC/HCT125	Quad 3-State Buffer	MSI
HC/HCT126	Quad 3-State Buffer	MSI
HC/HCT240*	Octal Buffer/Line Driver; 3-State; Inverting	MSI
HC/HCT241*	Octal Buffer/Line Driver; 3-State	MSI
HC/HCT244*	Octal Buffer/Line Driver; 3-State	MSI
HC/HCT365*	Hex Buffer/Line Driver; 3-State	MSI
HC/HCT366*	Hex Buffer/Line Driver; 3-State Inverting	MSI
HC/HCT367*	Hex Buffer/Line Driver; 3-State	MSI
HC/HCT368*	Hex Buffer/Line Driver; 3-State; Inverting	MSI
HC/HCT540*	Octal Buffer/Line Driver; 3-State; Inverting	MSI
HC/HCT541*	Octal Buffer/Line Driver; 3-State	MSI
HC4049	Hex Inverting HIGH-to-LOW Level Shifter	SSI
HC4050	Hex HIGH-to-LOW Level Shifter	SSI
	Flip-Flops/Latches/Registers	
HC/HCT73	Dual JK Flip-Flop with Reset; Negative-Edge Trigger	FF
HC/HCT74	Dual D-Type Flip-Flop with Set and Reset; Positive-Edge Trigger	FF
HC/HCT107	Dual JK Flip-Flop with Reset; Negative-Edge Trigger	FF
HC/HCT109	Dual JK Flip-Flop with Set and Reset; Positive-Edge Trigger	FF
HC/HCT112	Dual JK Flip-Flop with Set and Reset; Positive-Edge Trigger; 3-State	FF
HC/HCT173*	Quad D-Type Flip-Flop with Set and Reset; Positive-Edge Trigger; 3-State	MSI
HC/HCT174	Hex D-Type Flip-Flop with Reset; Positive-Edge Trigger	MSI
HC/HCT175	Quad D-Type Flip-Flop with Reset; Positive-Edge Trigger	MSI
HC/HCT273	Octal D-Type Flip-Flop with Set and Reset; Positive-Edge Trigger	MSI
HC/HCT374*	Octal D-Type Flip-Flop; Positive-Edge Trigger; 3-State	MSI
HC/HCT377	Octal D-Type Flip-Flop with Data Enable; Positive-Edge Trigger	MSI
HC/HCT534*	Octal D-Type Flip-Flop; Positive-Edge Trigger; 3-State; Inverting	MSI
HC/HCT564*	Octal D-Type Flip-Flop; Positive-Edge Trigger; 3-State; Inverting	MSI
HC/HCT574*	Octal D-Type Flip-Flop; Positive-Edge; 3-State	MSI
	Shift/FIFO Buffer/Multiport Registers	
HC/HCT164	8-Bit Serial-In/Parallel-Out Shift Register	MSI
HC/HCT165	8-Bit Parallel-In/Serial-Out Shift Register	MSI
HC/HCT166	8-Bit Parallel/Serial-In Serial-Out Shift Register	MSI
HC/HCT194	4-Bit Bidirectional Universal Shift Register	MSI
HC/HCT195	4-Bit Parallel Access Shift Register	MSI
HC/HCT299*	8-Bit Universal Shift Register; 3-State	MSI
HC/HCT597	8-Bit Shift Register with Input Latch	MSI
HC/HCT670	4 x 4 Register File; 3-State	MSI
HC/HCT4015	Dual 4-Bit Serial-In/Parallel-Out Shift Register	MSI
HC/HCT4094	8-Stage Shift-and-Store Bus Register	MSI
HC/HCT40104*	4-Bit Bidirectional Universal Shift Register; 3-State	MSI
HC/HCT40105	4 Bits x 16 Words FIFO Register	MSI
	Analog Switches	
HC/HCT4016	Quad Bilateral Switch	SSI
HC/HCT4066	Quad Bilateral Switch	SSI
HC/HCT4316	Quad Analog Switch	MSI
	Bus Transceivers	
HC/HCT242*	Quad Bus Transceiver; 3-State; Inverting	MSI
HC/HCT243*	Quad Bus Transceiver; 3-State	MSI
HC/HCT245*	Octal Bus Transceiver; 3-State	MSI
HC/HCT640*	Octal Bus Transceiver; 3-State Inverting	MSI
HC/HCT643*	Octal Bus Transceiver; 3-State True/Inverting	MSI
HC/HCT646*	Octal Bus Transceiver; 3-State	MSI
HC/HCT648*	Octal Bus Transceiver; 3-State; Inverting	MSI
	Schmitt Triggers	
HC/HCT14	Hex Inverting Schmitt Trigger	SSI
HC/HCT132	Quad 2-Input NAND Schmitt Trigger	SSI

***Types with a bus driver output stage.**

QMOS Digital Integrated Circuits

Type	Function/Description	Classification
CD54/74	**Arithmetic Circuits**	
HC/HCT85	4-Bit Magnitude Comparator	MSI
HC/HCT181	ALU	MSI
HC/HCT182	Carry Generator	MSI
HC/HCT280	9-Bit Odd/Even Parity Generator/Checker	MSI
HC/HCT283	4-Bit Full Adder With Fast Carry	MSI
HC/HCT583	Adder	MSI
HC/HCT688	8-Bit Magnitude Comparator	MSI
	Counters	
HC/HCT93	4-Bit Binary Ripple Counter	MSI
HC/HCT160	Presettable Synchronous BCD Decade Counter; Asynchronous Reset	MSI
HC/HCT161	Presettable Synchronous 4-Bit Binary Counter; Asynchronous Reset	MSI
HC/HCT162	Presettable Synchronous BCD Decade Counter; Synchronous Reset	MSI
HC/HCT163	Presettable Synchronous 4-Bit Binary Counter; Synchronous Reset	MSI
HC/HCT190	Presettable Synchronous BCD Decade Up/Down Counter	MSI
HC/HCT191	Presettable Synchronous 4-Bit Binary Up/Down Counter	MSI
HC/HCT192	Presettable Synchronous BCD Decade Up/Down Counter	MSI
HC/HCT193	Presettable Synchronous 4-Bit Binary Up/Down Counter	MSI
HC/HCT390	Dual Decade Ripple Counter	MSI
HC/HCT393	Dual 4-Bit Binary Ripple Counter	MSI
HC/HCT4017	Johnson Decade Counter with 10 Decoded Outputs	MSI
HC/HCT4020	14-Stage Binary Ripple Counter	MSI
HC/HCT4024	7-Stage Binary Ripple Counter	MSI
HC/HCT4040	12-Stage Binary Ripple Counter	MSI
HC/HCT4059	Programmable Divide by "N" Counter	MSI
HC/HCT4060	14-Stage Binary Ripple Counter with Oscillator	MSI
HC/HCT4510	Presettable Synchronous 4-Bit BCD Up/Down Counter	MSI
HC/HCT4516	Presettable Synchronous 4-Bit Binary Up/Down Counter	MSI
HC/HCT4518	Dual Synchronous BCD Counter	MSI
HC/HCT4520	Dual 4-Bit Synchronous Binary Counter	MSI
HC/HCT40102	8-Bit Synchronous BCD Down Counter	MSI
HC/HCT40103	8-Bit Binary Down Counter	MSI
	Analog and Digital Multiplexers/Demultiplexers	
HC/HCT151	8-Input Multiplexer	MSI
HC/HCT153	Dual 4-Input Multiplexer	MSI
HC/HCT157	Quad 2-Input Multiplexer	MSI
HC/HCT158	Quad 2-Input Multiplexer; Inverting	MSI
HC/HCT251	8-Input Multiplexer; 3-State	MSI
HC/HCT253	Dual 4-Input Multiplexer; 3-State	MSI
HC/HCT257*	Quad 2-Input Multiplexer; 3-State	MSI
HC/HCT258	Quad 2-Line to 4-Line Data Selector	MSI
HC/HCT354*	8-Input Multiplexer/Register; 3-State	MSI
HC/HCT356	8-Input Multiplexer/Register; 3-State	MSI
HC/HCT4051	8-Channel Analog Multiplexer/Demultiplexer	MSI
HC/HCT4052	Dual 4-Channel Analog Multiplexer/Demultiplexer	MSI
HC/HCT4053	Triple 2-Channel Analog Multiplexer/Demultiplexer	MSI
HC/HCT4067	16-Channel Analog Multiplexer/Demultiplexer	MSI
HC/HCT4351	Analog Multiplexer with Latch	MSI
HC/HCT4352	Analog Multiplexer with Latch	MSI
HC/HCT4353	Analog Multiplexer with Latch	MSI
	Decoders/Encoders	
HC/HCT42	BCD to Decimal Decoder (1-of-10)	MSI
HC/HCT137	3-to-8 Line Decoder with Latch	MSI
HC/HCT138	3-to-8 Line Decoder/Demultiplexer; Inverting	MSI
HC/HCT139	Dual 2-to-4 Line Decoder/Demultiplexer	MSI
HC/HCT147	10-to-4-Line Priority Encoder	MSI
HC/HCT154	4-to-16-Line Decoder/Demultiplexer	MSI
HC/HCT237	3-to-8-Line Decoder	MSI
HC/HCT238	3-to-8-Line Decoder/Demultiplexer	MSI
HC/HCT4511	BCD-to-7-Segment Latch/Decoder/Driver	MSI
HC/HCT4514	4-to-16-Line Decoder/Demultiplexer with Input Latches	MSI
HC/HCT4515	4-to-16-Line Decoder/Demultiplexer with Input Latches	MSI
HC/HCT4543	BCD-to-7-Segment Latch/Decoder/Driver for LCDs	MSI
	Latches	
HC/HCT75	Quad Bistable Transparent Latch	FF
HC/HCT259	8-Bit Addressable Latch	MSI
HC/HCT373*	Octal Transparent Latch; 3-State	MSI
HC/HCT533*	Octal Transparent Latch; 3-State; Inverting	MSI
HC/HCT563*	Octal Transparent Latch; 3-State; Inverting	MSI
HC/HCT573*	Octal Transparent Latch; 3-State	MSI
	One-Shot Multivibrators	
HC/HCT123	Dual Retriggerable Monostable Multivibrator with Reset	MSI
HC/HCT221	Dual Monostable Multivibrator with Reset	MSI
HC/HCT423	Dual Retriggerable Monostable Multivibrator with Reset	MSI
HC/HCT4538	Dual Retriggerable Precision Monostable Multivibrator	MSI
	Phase-Locked Loops (PLL)	
HC/HCT297	Digital Phase-Locked Loop Filter	MSI
HC/HCT4046	Phase-Locked Loop	MSI
HC/HCT7046	Phase-Locked Loop with In-Lock Detection	MSI

*Types with a bus driver output stage.

CMOS Logic Telecomunications ICs

Today's demanding telecommunications systems utilize digital electronic switching circuits to achieve the proper selection and correct circuit connections from among the multitude of possible interconnecting paths. RCA offers the following switching system devices:

- Several CMOS Single-Chip PCM (Pulse Code Modulated) CODECs with Filter and several CMOS Single-Chip, Full-Feature PCM CODECs that meet or exceed all AT&T D3/D4 specifications and CCITT recommendations
- Several CMOS Crosspoint Switches with Control Memory ranging from 4x4x1 and 4x4x2 arrays of transmission gates with 4-line-to-16-line decoders and 8x8x1 arrays with 6-line-to-64-line decoders.
- A Central Office quality Dual-Tone Multiple-Frequency (DTMF) Receiver that detects a selected group of 12 or 16 standard digits.
- A DTMF Receiver that detects all 16 standard digits.
- A CMOS HDB3 (High-Density Bipolar 3) Transcoder for 2.048/8.448 Mb/s transmission applications.
- A PCM Line Repeater for T1 carrier systems.
- In addition, selections from RCA's broad line of CD4000-series CMOS Logic ICs and from the QMOS (High-Speed CMOS) family of products can be used to provide multiplexing and demultiplexing, logic-level shifting and a variety of other circuit functions useful in telecommunications switching.

CMOS Single-Chip PCM CODECs with Filters

CD22302, CD22303
CD22354, CD22357

The RCA CD22302, CD22303, CD22354, and CD22357 are monolithic silicon-gate double-poly CMOS integrated circuits containing the band-limiting filters and the companding A/D and D/A conversion circuits that conform to the AT&T D3/D4 specifications and CCITT recommendations. The CD22302 and CD22354 provide the AT&T μ-law and the CD22303 and CD22357 provide the CCITT A-law companding characteristic.

The primary applications for these devices are in telephone systems. These circuits perform the analog and digital conversions between the subscriber loop and the PCM highway in a digital switching system.

Features:

- *Meets or exceeds all AT&T D3/D4 specifications and CCITT recommendations*
- *Complete CODEC and filtering systems:*
  - *No external components for sample and hold and Auto-Zero functions*
  - *Transmit Input section includes Anti-Aliasing Prefilter*
  - *Receive output filter with SIN X/X correction*
- *Variable Data Clocks–from 64 KHz to 4.1 MHz*
- *Programmable gain for transmit input*

Applications:

- *PABX*
- *Central office switching systems*
- *Accurate A/D and D/A conversions*
- *Digital telephones*

5-V Low-Power DTMF Receiver

CD22202E

The CD22202E complete dual-tone-multiple-frequency (DTMF) receiver detects a selectable group of 12 or 16 standard digits. No front-end pre-filtering is needed. The only externally-required components are an inexpensive 3.58-MHz TV "colorburst" crystal (for frequency reference) and a bias resistor. Extremely high system sensity is made possible by using the clock output of a crystal-connected CD22202E receiver to drive the time bases of additional receivers.

Features:

- *Central-office quality*
- *No front-end band splitting filters required*
- *Single, low-tolerance, 5-V supply*
- *Detects either 12 or 16 standard DTMF digits*
- *Uses inexpensive 3.579545-MHz crystal for reference*
- *Excellent speech immunity*
- *Output in either 4-bit hexadecimal code or binary coded 2-of-8*
- *Synchronous or handshake interface*
- *Three-state outputs*

5-V Low-Power Subscriber DTMF

CD22204E

The RCA-CD22204E is a complete Dual-Tone Multiple-Frequency (DTMF) receiver that detects all 16 standard digits. No front-end prefiltering is needed. The only externally required components are an inexpensive 3.58-MHz television "color-burst" crystal for frequency reference and a bias resistor. An Alternate Time Base (ATB) is provided to permit operation of up to ten CD22204Es from a single crystal.

Features:

- *No front-end band-splitting filters required*
- *Single low-tolerance 5-volt supply*
- *Three-state outputs for microprocessor-based systems*
- *Detects all 16 standard DTMF digits*
- *Uses inexpensive 3.579545-MHz crystal*
- *Excellent speech immunity*
- *Output in 4-bit hexadecimal code*

CMOS Logic Telecommunications ICs

PCM Line Repeater

CD22301

The RCA-CD22301 monolithic PCM repeater circuit is designed for T1 carrier systems operating with a bipolar pulse train of 1.544 Mbits/s. It can also be used in the T148 carrier system operating with a ternary pulse train of 2.37 Mbits/s. The circuit operates from a 5.1 V ±5% externally regulated supply.

Features:

- *Automatic line buildout*
- *5.1-V supply voltage*
- *Buffered output*

Applications:

- *T1 1.544 Mbits/s bipolar carrier system*
- *T148 2.37 Mbits/s ternary carrier system*

1200-Baud FSK Modem

CD22223E

The RCA-CD22223E 1200-baud modem is intended for half-duplex operation over a single-line system or full-duplex operation over a two-line system.

Features:

- *Built-in loop-back test*
- *Switched capacitor receive filter*
- *Low power CMOS (2 mA @ 5-V typ.)*
- *Single-supply operation*
- *Low error rate (5 x 10^{-3} @ 8-dB SNR)*

Dual-Tone Multifrequency Generator

CD22859

The RCA-CD22859 is a CMOS dual-tone multifrequency (DTMF) tone generator for use in dual-tone telephone dialing systems. The device can easily be interfaced to a standard pushbutton telephone keyboard, to provide enabling operation directly with the telephone lines.

Features:

- *Mute drivers on chip*
- *Device power can either be regulated dc or telephone loop current*
- *Use of an inexpensive 3.579545-MHz TV crystal provides high accuracy and stability for all frequencies*

HDB3 (High-Density Bipolar 3) Transcoder for 2.048/8.448 Mb/s Transmission Applications

CD22103A

The RCA-CD22103A is an LSI SOS integrated circuit which performs the HDB3 transmission coding and reception decoding functions with error detection. It is used in 2.048 and 8.448 Mb/s transmission applications. The CD22103A performs HDB3 coding and decoding for data rates from 50 kb/s to 10 Mb/s in a manner consistent with CCITT G703 recommendations.

Features:

- *HDB3 coding and decoding for data rates from 50 Kb/s to 10 Mb/s in a manner consistent with CCITT G703 recommendations*
- *HDB3/AMI transmission coding/reception decoding with code error detection performed in independent coder and decoder sections*
- *All transmitter and receiver inputs/outputs are TTL compatible*
- *Internal Loop Test capability*

4 x 4 Crosspoint Switch with Control Memory

CD22100

4 x 4 x 2 Crosspoint Switches with Control Memory

CD22101, CD22102

The RCA-CD22100, CD22101, and CD22102 consist of a 4 x 4 (CD22100) and 4 x 4 x 2 (CD22101 and CD22102) array of crosspoints (transmission gates) with a 4-line-to-16-line decoder and 16 latch circuits. Any one of the sixteen transmission gates can be selected by applying the appropriate four-line address, and any number of crosspoints can be ON simultaneously. Corresponding crosspoints in each array are turned on and off simultaneously, also.

Features:

- *Low ON resistance-75 Ω typ. at $V_{DD} = 12$ V*
- *"Built-in" latched inputs*
- *Large analog signal capability-$\pm V_{DD}/2$*
- *10-MHz switch bandwidth*
- *Matched switch characteristics*
  $\Delta R_{ON} = 18\ \Omega$ *typ. at* $V_{DD} = 12$ *V (CD22100)*
  $\Delta R_{ON} = 5\ \Omega$ *typ. at* $V_{DD} = 12$ *V (CD22101, CD22102)*
- *Standard CMOS noise immunity*

Applications:

- *Telephone systems*
- *PBX*
- *Studio audio switching*
- *Multisystem bus interconnect*

High Performance CMOS Logic – KS54/74AHCT, KS54/74HCTLS

FEATURES

- KS54/74AHCT Family is a direct plug-in replacement for 54/74ALS
- KS54/74HCTLS Family is a direct plug-in replacement for industry standard 54/74LS, 54/74HC and 54/74HCT
- Output drive currents: 24mA (V_{OL} = 0.5V)
- ESD; over 3500 volts

GENERAL DESCRIPTION

The 54/74AHCT Advanced High-Speed CMOS and the 54/74HCTLS High-Speed CMOS logic families were designed to combine the most desirable features of their predecessors: the low power, wide operating supply and temperature ranges, superior noise immunity, rail-to-rail output voltage swings and low input currents of CMOS on the one hand, and the very high-speeds and drive capability on the other (Figure 1).

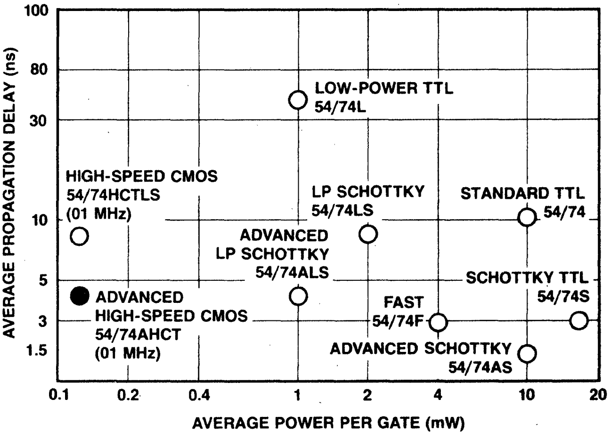

Figure 1. Power Dissipation vs gate delay characteristics for a two-input NAND gate implemented in various bipolar and CMOS technologies.

These are the exact functional equivalents of the 54/74ALS and 54/74LS parts and can readily replace them to reduce power dissipation in existing designs. Note that they also provide equivalent drive capability to LS and ALS logic which is much more than that of the earlier high-speed CMOS logic families, the 54/74HC and the 54/74HCT. A comparison of the key characteristics for an octal buffer illustrates this very clearly in Figure 2.

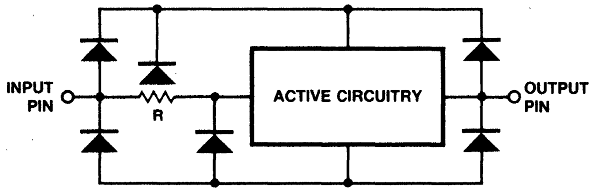

Figure 2. The input and output protection circuitry of 54/74AHCT and 54/74HCTLS parts.

All AHCT and HCTLS parts are fully characterized for operation over the 4.5 and 5.5V power supply range and the industrial and military temperature ranges:

74AHCT and 74HCTLS are characterized over −40°C to +85°C

54AHCT and 54HCTLS are characterized over −55°C to +125°C

Notice that the commercial operating range of ALS, LS and FAST families is 0°C to 70°C which is much narrower than that of the AHCT and HCTLS. Also the supply operating range of the 74LS and 74FAST families is 4.75 to 5.25V as opposed to 4.5 to 5.5V for AHCT and HCTLS.

ESD AND LATCHUP PROTECTION

Historically, MOS devices have always been considered as more susceptible to ESD damage than others. This is not the case for the AHCT and HCTLS families: special design and processing have actually improved the ESD immunity to where it is actually much better than that of bipolar logic. The MIL-STD 38510 ESD test shows that all inputs and outputs of AHCT and HCTLS devices are well protected against voltage transients of at least 3500V. The protection circuitry used for this purpose is illustrated in Figure 2.

Latchup immunity is another strong attribute of the AHCT and HCTLS families. Latchup results when input or output protection diodes are forward-biased because of voltages above V_{CC} and below ground. The current required to cause latchup at AHCT/HCTLS inputs or outputs is typically above 200 mA which is well over the practical currents that one may encounter in normal operation.

CMOS HIGH SPEED LOGIC

54/74HCTLS, 54/74AHCT SELECTION GUIDE

Device	Description	HCTLS	AHCT
00	Quad 2-Input NAND Gates	X	X
01	Quad 2-Input NAND Gates with Open-Drain Outputs	X	X
02	Quad 2-Input NOR Gates	X	X
03	Quad 2-Input NAND Gates with Open-Drain Outputs	X	X
04	Hex Inverters	X	X
05	Hex Inverters with Open-Drain Outputs	X	X
08	Quad 2-Input AND Gates	X	X
09	Quad 2-Input AND Gates with Open-Drain Outputs	X	X
10	Triple 3-Input NAND Gates	X	X
11	Triple 3-Input AND Gates	X	X
12	Triple 3-Input NAND Gates with Open-Drain Outputs	X	X
13	Dual 4-Input NAND Schmitt Trigger		X
32	Quad 2-Input OR Gates		X
51	Dual AND-OR-Invert Gates		X
73	Dual J-K Negative-Edge-Triggered Flip-Flops with Clear	X	X
74	Dual D-Type Positive-Edge-Triggered Flip-Flops with Preset and Clear	X	X
76	Dual J-K Flip-Flops with Preset and Clear	X	
78	Dual J-K Flip-Flops with Preset and Common Clear and Clock	X	
86	Quad 2-Input Exclusive-OR Gates	X	X
107	Dual J-K Negative-Edge-Triggered Flip-Flops with Clear	X	X
109	Dual J-K Positive-Edge-Triggered Flip-Flops with Preset and Clear	X	X
112	Dual J-K Negative-Edge-Triggered Flip-Flops with Preset and Clear	X	X
121	Monostable Multivibrators with Schmitt-Trigger Inputs		X
123	Dual Retriggerable Monostable Multivibrators		X
139	Dual 1-of-4 Decoders/Multiplexers	X	X
148	8 to 3 Line Priority Encoders		X
154	4 to 16 Line Decoder/Demultiplexer		X
155	Dual 2 to 4 Line Decoder/Multiplexer	X	X
157	Quad 2 to 1 Line Data Selectors/ Multiplexers	X	X
158	Quad 2 to 1 Line Data Selectors/ Multiplexers	X	X
160	Synchronous 4-Bit Decode Counters	X	X
161	Synchronous 4-Bit Binary Counters	X	X
162	Synchronous 4-Bit Binary Counters	X	X
163	Synchronous 4-Bit Binary Counters	X	X
164	8-Bit Serial-In/Parallel-Out Shift Registers	X	X
165	8-Bit Parallel-In/Serial-Out Shift Registers	X	X
166	8-Bit Parallel-In/Serial-Out Shift Registers with Clear	X	X
173	4-Bit D-Type Registers with 3-State Outputs		X
174	Hex D-Type Flip-Flops with Clear	X	X
175	Quad D-Type Flip-Flops with Clear	X	X
191	Sync, 4-Bit Up/Down Binary Counter	X	X
193	Sync, 4-Bit Up/Down Binary Counter with Dual Clock	X	X
210	Octal Buffer with 3-State Outputs	X	X
238	3-Line to 8-Line Decoder/Multiplexer	X	X

Device	Description	HCTLS	AHCT
239	Dual 1 of 4 Decoder/Multiplex	X	X
240	Octal Buffers and Line Drivers with 3-State Outputs	X	X
241	Octal Buffers and Line Drivers with 3-State Outputs	X	X
244	Octal Buffers and Line Drivers with 3-State Outputs	X	X
245	Octal Bus Transceivers with 3-State Outputs	X	X
257	Quad 2-Line to 1-Line Data Selectors/ Multiplexers with 3-State Outputs	X	X
258	Quad 2-Line to 1-Line Data Selectors/ Multiplexers with 3-State Outputs	X	X
259	8-Bit Addressable Latches	X	X
266	Quad Exclusive-NOR Gates with Open-Drain Outputs	X	X
273	Octal D-Type Flip-Flops with Clear	X	X
299	8-Bit Universal Shift/Storage Registers with 3-State Outputs	X	X
365	Hex Bus-Drivers with 3-State Output	X	X
366	Hex Bus-Drivers with 3-State Output	X	X
367	Hex Bus-Drivers with 3-State Output	X	X
368	Hex Bus-Drivers with 3-State Output	X	X
373	Octal D-Type Transparent Latches with 3-State Outputs	X	X
374	Octal D-Type Flip-Flops with 3-State Outputs	X	X
393	Dual 4-Bit Binary Counters	X	X
399	Quad 2-Port Registers		X
423	Dual Retriggerable Monostable Multivibrators		X
533	Octal D-Type Transparent Latches with 3-State Outputs	X	X
534	Octal D-Type Flip-Flop with 3-State Outputs	X	X
540	Octal Buffers and Line Drivers with 3-State Outputs	X	X
541	Octal Buffers and Line Drivers with 3-State Outputs	X	X
563	Octal D-Type Transparent Latches with 3-State Outputs	X	X
564	Octal D-Type Flip-Flops with 3-State Outputs	X	X
573	Octal D-Type Transparent Latches with 3-State Outputs	X	X
574	Octal D-Type Flip-Flops with 3-State Outputs	X	X
590	8-Bit Binary Counters with 3-State Output Register		X
592	8-Bit Binary Counters with Input Register		X
593	8-Bit Binary Counters with Bidirectional Input Register/Counter Output		X
640	Octal Bus Transceivers	X	X
643	Octal Bus Transceivers	X	X
646	Octal 3-State Bus Transceivers with Registers	X	X
648	Octal 3-State Bus Transceivers with Registers	X	X
679	12-Bit Address Comparator with Enable		X
680	12-Bit Address Comparator with Enable		X
688	8-Bit Identity Comparators		X

Signetics

Your Total LOGIC Supplier

FAST
Low Power Schottky
Schottky
Standard TTL
High Speed CMOS
4000B CMOS
100K ECL
10K ECL

signetics

a subsidiary of U.S. Philips Corporation

Signetics Corporation
811 E. Arques Avenue
P.O. Box 3409
Sunnyvale, California 94088-3409
Telephone 408/991-2000

Technology Selection Guide

DEVICE NUMBER	DESCRIPTION	STD	S	LS	FAST	HC	HCT
00	Quad 2-Input NAND Gate	A	A	A	A	A	A
01	Quad 2-Input NAND Gate, OC			A			
02	Quad 2-Input NOR Gate	A	A	A	A	A	A
03	Quad 2-Input NAND Gate	A	A			A	A
04	Hex Inverter	A	A	A	A	A	A
05	Hex Inverter, OC	A	A	A			
06	Hex Inverter Buffer/Driver, OC	A					
07	Hex Buffer/Driver, OC	A					
08	Quad 2-Input AND Gate	A	A	A	A	A	A
09	Quad 2-Input AND Gate, OC			A			
10	Triple 3-Input NAND Gate	A	A	A	A	A	A
11	Triple 3-Input AND Gate	A	A	A	A	A	A
13	Dual 4-Input NAND Schmitt Trigger	A		A	A		
14	Hex Inverter Schmitt Trigger	A		A	A	A	A
16	Hex Inverter Buffer/Driver, OC	A					
17	Hex Buffer/Driver, OC	A					
20	Dual 4-Input NAND Gate	A	A	A	A	A	A
21	Dual 4-Input AND Gate	A		A		Q2 86	Q2 86
25	Dual 4-Input NOR with Strobe	A					
26	Quad 2-Input NAND Gate, OC	A		A			
27	Triple 3-Input NOR Gate	A		A	A	A	A
28	Quad 2-Input NOR Buffer	A					
30	8-Input NAND Gate	A		A	A	2H 86	1H 86
32	Quad 2-Input OR Gate	A	A	A	A	A	A
33	Quad 2-Input NOR Buffer, OC	A		A			
37	Quad 2-Input NAND Buffer	A	A	A	A		
38	Quad 2-Input NAND Buffer, OC	A	A	A	A		
39	Quad 2-Input NAND Buffer, OC	A					
40	Dual 4-Input NAND Buffer	A	A	A	A		
42	BCD-to-Decimal Decoder	A		A		Q1 86	Q1 86
45	BCD-to-Decimal Decoder/Driver, OC	A					
50	Expandable Dual 2-Wide 2-Input AOI Gate	A					
51	Dual 2-Wide 2-Input AOI Gate	A	A	A	A		
54	4-Wide 2-Input AOI Gate			A			
58	Dual 4-Input AND/OR Gate					A	A
64	4-2-3-2 Input AOI Gate		A		A		
73	Dual J-K Master-Slave Flip-Flop	A		A		A	A
74	Dual D-Type Positive Edge-Triggered Flip-Flop	A	A	A*	A	A	A
75	Quad Bistable Latch	A		A		A	A
76	Dual J-K Master-Slave Flip-Flop	A		A			
83	4-Bit Binary Full Adder, Ripple Carry	A		A*			
85	4-Bit Magnitude Comparator	A	A	A	A	A	A
86	Quad 2-Input EXCLUSIVE-OR Gate	A	A	A	A	A	A
90	Decade Ripple Counter	A		A			
91	8-Bit Shift Register	A					
92	Divide-by-12 Counter	A		A			
93	4-Bit Binary Ripple Counter	A		A		A	A
94	4-Bit PISO Shift Register	A					
95	4-Bit Shift Register	A		A**			
96	5-Bit Shift Register	A		A			
107	Dual J-K Master-Slave Flip-Flop	A		A		A	A
109	Dual J-K Positive Edge-Triggered Flip-Flop	A		A*	A	A	A
112	Dual J-K Negative Edge-Triggered Flip-Flop		A	A	2H 85	A	A
113	Dual J-K Negative Edge-Triggered Flip-Flop		A	A	2H 85		
114	Dual J-K Negative Edge-Triggered Flip-Flop				2H 85		
116	Dual 4-Bit Latch with Clear	A					

*A Version; **B Version; A = Available; 2H 85 = 2nd Half of 1985; Q1 86 = 1st Quarter of 1986; Q2 86 = 2nd Quarter of 1986.

Technology Selection Guide

DEVICE NUMBER	DESCRIPTION	STD	S	LS	FAST	HC	HCT
121	Monostable Multivibrator	A					
123	Dual Retriggerable Monostable Multivibrator	A				A	A
125	Quad 3-State Buffer	A		A*	A	A	A
126	Quad 3-State Buffer	A		A*	A	A	A
128	Quad 2-Input NOR Buffer	A					
132	Quad 2-Input NAND Schmitt Trigger	A		A	A	A	A
133	13-Input NAND Gate		A				
134	12-Input NAND Gate, 3-State		A				
135	Quad EXCLUSIVE-OR/NOR Gate		A				
136	Quad EXCLUSIVE-OR, OC			A			
137	3-to-8 Decoder/Demultiplexer, Inverting					Q2 86	Q2 86
138	3-to-8 Decoder/Demultiplexer		A	A	A	A	A
139	Dual 2-to-4 Decoder/Demultiplexer		A	A	A	A	A
140	Dual 4-Input NAND Line Driver		A				
145	BCD-to-Decimal Decoder/Driver, OC	A					
147	10-to-4 Priority Encoder	A				A	A
148	8-to-3 Priority Encoder	A			2H 85		
150	16-to-6 Multiplexer	A					
151	8-to-1 Multiplexer	A	A	A	A	A	A
153	Dual 4-to-1 Multiplexer	A	A	A	A	A	A
154	4-to-16 Decoder/Demultiplexer	A		A		A	A
155	Dual 2-to-4 Decoder/Demultiplexer	A		A			
156	Dual 2-to-4 Decoder/Demultiplexer, OC	A		A			
157	Quad 2-to-1 Multiplexer	A	A	A	A	A	A
158	Quad 2-to-1 Multiplexer	A	A	A	A	A	A
160	Synchronous 4-Bit Decade Counter	A		A*	2H 85*	A	A
161	Synchronous 4-Bit Binary Counter	A		A*	2H 85*	A	A
162	Synchronous 4-Bit Decade Counter			A*	2H 85*	A	A
163	Synchronous 4-Bit Binary Counter	A		A*	A*	A	A
164	8-Bit PISO Shift Register	A		A		A	A
165	8-Bit PISO Shift Register	A				A	A
166	8-Bit PISO Shift Register	A			A	A	A
168	Decade Up/Down Counter		A*	A*	2H 85		
169	Binary Up/Down Counter		A*	A*	2H 85		
170	4 x 4 Register File, OC	A		A			
172	16-Bit Multiple Port Register File		A				
173	Quad D-Type Flip-Flop, 3-State	A		A		A	A
174	Hex D-Type Flip-Flop with Clear	A	A	A	A		
175	Quad D-Type Flip-Flop	A			A	A	A
180	8-Bit Odd/Even Parity Checker	A					
181	4-Bit Arithmetic Logic Unit	A	A	A	A	Q2 86	Q2 86
182	Look-Ahead Carry Generator		A		1H 86	A	A
189	64-Bit Random Access Memory						
190	Decade Up/Down Counter	A			2H 85	A	A
191	Binary Up/Down Counter	A		A	2H 85	A	A
192	Decade Up/Down Counter	A		A	2H 85	Q2 86	Q2 86
193	4-Bit Binary Up/Down Counter	A		A	2H 85	A	A
194	4-Bit Bidirectional Shift Register	A	A	A*	A	A	A
195	4-Bit Parallel-Access Shift Register	A	A	A*	A	A	A
197	Presettable Binary Counter			A			
198	8-Bit Bidirectional Universal Shift Register				2H 85	Q1 86	Q1 86
199	8-Bit Universal Shift Register	A			2H 85		
221	Dual Monostable Multivibrator	A					
225	FIFO Register, 3-State		A				
227	1-to-8 Line Decoder					Q1 86	Q1 86
238	1-of-8 Decoder/Demultiplexer, True/Inverting					A	A
240	Octal Buffer, 3-State		A	A	A	A	A
241	Octal Buffer, 3-State		A	A	A	A	A

*A Version; **B Version; A = Available; 2H 85 = 2nd Half of 1985; Q1 86 = 1st Quarter of 1986; Q2 86 = 2nd Quarter of 1986.

Technology Selection Guide

DEVICE NUMBER	DESCRIPTION	STD	S	LS	FAST	HC	HCT
242	Quad Inverting Bus Transceiver, 3-State		A	A	A	A	A
243	Quad Bus Transceiver, 3-State		A	A	A	A	A
244	Octal Buffer, 3-State		A	A	A	A	A
245	Octal Bus Transceiver, 3-State			A	A	A	A
251	8-to-1 Multiplexer, 3-State		A	A	2H 85	A	A
253	Dual 4-to-1 Multiplexer, 3-State		A	A	A	A	A
256	Dual 4-Bit Addressable Latch			A	A		
257	Quad 2-to-1 Multiplexer, 3-State		A	A*	A	A	A
258	Quad 2-to-1 Multiplexer, 3-State		A	A*	A	Q1 86	Q1 86
259	8-Bit Addressable Latch			A	A	A	A
260	Dual 5-Input NOR Gate		A	A	A		
266	Quad EXCLUSIVE-OR, OC			A		A	
269	8-Bit Up/Down Counter				A		
273	Octal D Flip-Flop		A	A	A	A	A
279	Quad S-R Latch	A					
280	9-Bit Odd/Even Parity Generator/Checker		A		A*	A	A
283	4-Bit Adder			A	2H 85	A	A
290	Decade Counter			A			
293	4-Bit Binary Counter			A			
295	4-Bit Shift Register, 3-State			A**			
297	Digital Phase-Locked Loop Filter					A	A
298	Quad 2-Port Register	A		A	A		
299	Octal Shift/Storage Register, 3-State				2H 85	A	A
322	Octal Shift/Storage Register				2H 85		
323	Octal Shift/Storage Register				2H 85		
350	4-Bit Four-Way Shifter		A		A		
352	Dual 4-to-1 Multiplexer, Inverting			A	A		
353	Dual 4-to-1 Multiplexer, Inverting, 3-State			A	A		
354	8-Input Multiplexer/Register, 3-State					Q2 86	Q2 86
356	8-Input Multiplexer/Register, 3-State					Q1 86	Q1 86
363	Octal Latch, 3-State, MOS Compatible Outputs			A			
364	Octal D Flip-Flop, 3-State, MOS Compatible Outputs			A			
365	Hex Buffer with Common Enable, 3-State	A		A*	A	A	A
366	Hex Inverter Buffer/Driver with Common Enable, 3-State	A		A*	A	A	A
367	Hex Buffer, 4-Bit and 2-Bit, 3-State	A		A*	A	A	A
368	Hex Inverter, 4-Bit and 2-Bit, 3-State	A		A*	A	A	A
373	Octal Latch, 3-State		A	A	A	A	A
374	Octal D Flip-Flop, 3-State		A	A	A	A	A
375	Quad Latch			A			
377	Octal D-Type Flip-Flop with Enable			A	A	A	A
378	Hex D Flip-Flop with Enable			A	A		
379	Quad D Flip-Flop with Enable				A		
381	4-Bit Arithmetic Logic Unit				2H 85		
382	4-Bit Arithmetic Logic Unit				2H 85		
384	8-Bit Serial/Parallel Two's Complement Multiplier				1H 86		
385	Quad Serial Adder/Subtractor				1H 86		
390	Dual Decade Ripple Counter			A		A	A
393	Dual Binary Ripple Counter			A		A	A
395	4-Bit Cascadable Shift Register, 3-State			A*	A		
398	Quad 2-Port Register with True and Complement Outputs				A		
399	Quad 2-Port Register				A		
412	Octal Multi-Mode Buffered Latch				1H 86		
423	Dual Retriggerable Monostable Multivibrator					A	A
432	Octal Multi-Mode Buffered Latch				1H 86		
445	BCD-to-Decimal Decoder with 7V Output			A			

*A Version; **B Version; A = Available; 2H 85 = 2nd Half of 1985; Q1 86 = 1st Quarter of 1986; Q2 86 = 2nd Quarter of 1986.

Technology Selection Guide

DEVICE NUMBER	DESCRIPTION	STD	S	LS	FAST	HC	HCT
490	Dual Decade Ripple Counter			A			
521	8-Bit Comparator				A		
524	8-Bit Register Comparator				2H 85		
533	Inverting Octal D Latch, 3-State				A	A	A
534	Octal D Flip-Flop, 3-State				A	A	A
537	1-of-10 Decoder, 3-State				2H 85		
538	1-of-8 Decoder, 3-State				2H 85		
539	Dual 1-of-4 Decoder, 3-State				2H 85		
540	Octal Driver, 3-State			A	A	Q1 86	Q1 86
541	Octal Driver, 3-State			A	A	Q1 86	Q1 86
543	Octal Transparent Bidirectional Latch				2H 85		
544	Octal Transparent Bidirectional Latch				2H 85		
545	Octal Bus Transceiver				A		
547	Octal Decoder/Mux w/Addr. Latches and Acknowledge				1H 86		
548	Octal Decoder/Multiplexer with Acknowledge				1H 86		
550	Octal Registered Transceiver with Status Flags				1H 86		
551	Octal Registered Transceiver with Status Flags				1H 86		
557	8 x 8 Multiplier with Latch, 3-State				1H 86		
558	8 x 8 Multiplier, 3-State				1H 86		
563	Octal Transparent Inverting Latch, 3-State				1H 86	A	A
564	Octal D-Type Inverting Flip-Flop, 3-State				1H 86	A	A
568	BCD Decade Up/Down Synchronous Counter			A*	2H 85		
569	4-Bit Binary Up/Down Synchronous Counter			A*	2H 85		
573	Octal Transparent Latch, 3-State				1H 86	A	A
574	Octal D-Type Flip-Flop. Positive Edge-Triggered, 3-State					A	A
579	8-Bit Up/Down Counter, Common I/O				A		
583	BCD Adder					Q2 86	Q2 86
588	GPIB Compatible Octal Transceiver				A		
595	8-Bit Shift Register with Output Latch				1H 86		
596	8-Bit Shift Register with Output Latch						
597	8-Bit Shift Register with Input Latch				1H 86	Q1 86	Q1 86
598	8-Bit Shift Register with Input Latch				1H 86		
604	Dual 8-Bit Latch, 3-State				A		
605	Dual 8-Bit Latch, OC				A		
620	Octal Transceiver, 3-State			A	A		
621	Octal Transceiver, OC			A	A		
622	Octal Transceiver, OC			A	A		
623	Octal Transceiver, 3-State			A	A		
630	Memory Error Detector/Corrector, 3-State				1H 86		
631	Memory Error Detector/Corrector				1H 86		
640	Octal Bus Transceiver, 3-State			A	A	A	A
640-1	Octal Bus Transceiver, 3-State 48 mA Sink Capability			A			
641	Octal Bus Transceiver, OC			A	A		
641-1	Octal Bus Transceiver, OC				A		
642	Octal Bus Transceiver, OC			A	A		
643	Octal True/Inverting Transceiver, 3-State					A	A
645	Octal Bus Transceiver, 3-State			A			
645-1	Octal Bus Transceiver, 3 State			A	A		
646	Octal Bus Transceiver with Registers, 3-State				2H 85	A	A
647	Octal Bus Transceiver with Registers, OC					A	A
648	Octal Bus Transceiver with Registers, 3-State				2H 85	A	A
649	Octal Bus Transceiver with Registers, OC				2H 85		
655	Octal Buffer with Parity Generator-Checker, 3-State				A*		
656	Octal Buffer with Parity Generator-Checker, 3-State				A*		
657	Octal Bus Transceiver with Parity Generator-Checker, 3-State				A		
670	4 × 4 Register File, 3-State					A	A
673	16-Bit SIPO Shift Register				2H 85		
674	16-Bit PISO Shift Register				2H 85		
675	16-Bit PISO Shift Register with Serial Output Capability				2H 85		
676	16-Bit PISO Shift Register with Parallel Output Capability				2H 85		

*A Version; **B Version; A = Available; 2H 85 = 2nd Half of 1985; Q1 86 = 1st Quarter of 1986; Q2 86 = 2nd Quarter of 1986.

Technology Selection Guide

DEVICE NUMBER	DESCRIPTION	STD	S	LS	FAST	HC	HCT
688	8-Bit Magnitude Comparator					A	A
764	Dual Port RAM Controller with DRAM Refresh, with Latch			A	1H 86		
765	8-Bit Counter				2H 85		
779	8-Bit Counter				2H 85		
784	8-Bit Serial Multiplier and Adder/Subtractor				2H 85		
786	4-Bit Asynchronous Arbiter						
821	10-Bit Register, Noninverting, 3-State				2H 86		
822	10-Bit Register, Inverting, 3-State				1H 86		
823	9-Bit Register, Noninverting, 3-State				1H 86		
824	9-Bit Register, Inverting, 3-State				1H 86		
825	8-Bit Register, Noninverting, 3-State				1H 86		
826	8-Bit Register, Inverting, 3-State				1H 86		
827	10-Bit Buffer, Noninverting, 3-State				1H 86		
828	10-Bit Buffer, Inverting, 3-State				1H 86		
841	10-Bit Latch, Noninverting, 3-State				1H 86		
842	10-Bit Latch, Inverting, 3-State				1H 86		
843	9-Bit Latch, Noninverting, 3-State				1H 86		
844	9-Bit Latch, Inverting, 3-State				1H 86		
845	8-Bit Latch, Noninverting, 3-State				1H 86		
846	8-Bit Latch, Inverting, 3-State				1H 86		
861	10-Bit Transceiver, Noninverting, 3-State				1H 86		
862	10-Bit Transceiver, Inverting, 3-State				1H 86		
863	9-Bit Transceiver, Noninverting, 3-State						
864	9-Bit Transceiver, Inverting, 3-State						
881	ALU/Function Generator				1H 86		
882	32-Bit Carry-Look-Ahead Generator				1H 86		
1240	Octal Buffer, 3-State				A		
1241	Octal Buffer, 3-State				A		
1242	Quad Transceiver, Inverting, 3-State				A		
1243	Quad Bus Transceiver, 3-State				A		
1244	Octal Bus/Line Driver, 3-State				A		
1245	Octal Bus Transceiver, 3-State				2H 85		
3037	30 Ohm Transmission Line Driver Quad 2-Input NAND, OC				A		
3038	30 Ohm Transmission Line Driver Quad 2-Input NAND, OC				A		
3040	30 Ohm Transmission Line Driver Dual 4-Input NAND, OC				A		
30240	Octal Inverting 30 Ohm Transmission Line Driver, OC				1H 86		
30241	Octal 30 Ohm Transmission Line Driver				1H 86		
30244	Octal 30 Ohm Transmission Line Driver				1H 86		
30245	Octal Transceiver, 30 Ohm Transmission Line Driver				1H 86		
30640	Octal Transceiver, 30 Ohm Transmission Line Driver, Inverting				1H 86		
4002	Dual 4-Input NOR Gate					A	A
4015	Dual 4-Bit SIPO Shift Register					A	A
4016	Quad Bilateral Switch					A	A
4017	Johnson Decade Counter with 10 Decoded Outputs					A	A
4020	14-Stage Binary Counter					A	A
4024	7-Stage Binary Counter					A	A
4040	12-Stage Binary Counter					A	A
4046A	Phase Locked Loop with V_{CO}					A	A
4049	Hex Inverting HIGH-to-LOW Level Shifter					A	
4050	Hex HIGH-to-LOW Level Shifter					A	
4051	8-Channel Analog MUX/DMUX					A	A
4052	Dual 4-Channel Analog MUX/DMUX					A	A
4053	Triple 2-Channel Analog MUX/DMUX					A	A
4059	Programmable Divide By n Counter					Q2 86	Q2 86
4060	14-Stage Ripple-Carry Binary Counter					A	A
4066	Quad Bilateral Switch					Q1 86	Q1 86
4067	16-Channel Analog MUX/DMUX					Q1 86	Q1 86

*A Version; **B Version; A = Available; 2H 85 = 2nd Half of 1985; Q1 86 = 1st Quarter of 1986; Q2 86 = 2nd Quarter of 1986.

FOR COMPLETE DATA SHEET, Call 800-443-0100, Ext. 518

Technology Selection Guide

DEVICE NUMBER	DESCRIPTION	STD	S	LS	FAST	HC	HCT
4075	Tripple 3-Input OR Gate					A	A
4094	8-Stage Shift-And-Store Bus Register					A	A
4316	Quad Bilateral Switch					A	A
4351	8-Channel Analog MUX/DMUX with Latch					A	A
4352	Dual 4-Channel Analog MUX/DMUX with Latch					Q2 86	Q2 86
4353	Triple 2-Channel Analog MUX/DMUX with Latch					Q1 86	Q1 86
4510	BCD Up/Down Counter					Q2 86	Q2 86
4511	BCD to 7-Segment Latch/Decoder/Driver					A	A
4514	1-of-16 Decoder/DMUX with Input Latches					A	A
4515	1-of-16 Decoder/DMUX with Input Latches					A	A
4516	Binary Up/Down Counter					Q2 86	Q2 86
4518	Dual BCD Counter					A	A
4520	Dual 4-Bit Binary Counter					A	A
4538	Dual Retriggerable Precision Monostable Multivibrator					A	A
4543	BCD to 7-Segment Latch/Decoder/Driver for LCDs					A	A
7030	9-Bit x 16 Word Expandable FIFO Register					Q2 86	Q2 86
7046	Phase-Locked Loop with Lock Detector					Q1 86	Q1 86
7597	8-Bit Shift Register with Latches					A	A
40102	Presettable 2-Decade BCD Down Counter					Q2 86	Q2 86
40103	8-Bit Binary Down Counter					A	A
40104	4-Bit Bidirectional Universal Shift Register					A	A
40105	4-Bit x 16-Word FIFO Register					A	A

*A Version; **B Version; A = Available; 2H 85 = 2nd Half of 1985; Q1 86 = 1st Quarter of 1986; Q2 86 = 2nd Quarter of 1986.

Function Cross Reference Guide

The Function Cross Reference Guide is provided for customer reference only. It does not represent all the devices available from Signetics' Logic Division.
The device number given is a base number. Check the Number Cross Reference Guide for the complete part number and availability.

GATES

FUNCTION	DEVICE NO.
Inverters	
Hex Inverter	04
Hex Inverter, OC	05
Hex Inverter buffer/Driver, OC (30V)	06
Hex Inverter Schmitt Trigger	14
Hex Inverter Buffer/Driver, OC (15V)	16
Octal Inverting Transmission Line Driver	30240
Hex Inverter (15V to TTL Levels)	4049
Hex Inverter Unbuffered Outputs	4069UB
Hex Inverter Schmitt Trigger	40106
Dual Complementary Pair and Inverter, Unbuffered	4007UB
NAND	
Quad 2-Input	00
Quad 2-Input, OC	01
Quad 2-Input, OC	03
Quad 2-Input, OC	26
Quad 2-Input NAND Buffer	37
Quad 2-Input NAND Buffer, OC	38
Quad 2-Input NAND Transmission Line Driver, OC	3037
Quad 2-Input NAND Transmission Line Driver, OC	3038
Triple 3-Input	10
Dual 4-Input, Schmitt Trigger	13
Dual 4-Input	20
8-Input	30
Dual 4-Input NAND Buffer	40
Dual 4-Input NAND Line Driver	140
Dual 4-Input NAND Line Driver	3040
Quad 2-Input, Schmitt Trigger	132
Quad 2-Input	4011
Quad 2-Input, Unbuffered Outputs	4011UB
Dual 4-Input	4012
Triple 3-Input	4013
8-Input	4068
12-Input	134
13-Input	133
AND	
Quad 2-Input	08
Quad 2-Input	4081
Quad 2-Input, OC	09
Triple 3-Input	11
Dual 4-Input	21
Dual 4-Input	4082
NOR	
Quad 2-Input	02
Quad 2-Input	28
NOR (Continued)	
Quad 2-Input	128
Quad 2-Input	4001
Quad 2-Input, Unbuffered Output	4001UB
Quad 2-Input, OC	33
Triple 3-Input	27
Triple 3-Input	4025
Dual 3-input, with Inverter	4000
Dual 4-Input	4002
Dual 4-Input, with Strobe	25
Dual 5-Input	260
8-Input	4078
OR	
Quad 2-Input	32
Quad 2-Input	4071
Triple 3-Input	4075
Dual 4-Input	4072
Exclusive-OR	
Quad	86
Quad	4030
Quad, OC	136
Quad	4070
Quad Exclusive OR-NOR	135
Exclusive-NOR	
Quad	4077
Quad, OC	266
Quad Exclusive OR-NOR	135
Combination Gates	
Expandable Dual 2-Wide 2-Input AND-OR-Invert	50
Dual 2-Wide 2-Input AND-OR-Invert	51
4-Wide 2-Input AND-OR-Invert	54
Dual 4-Input AND/OR Gate	58
4-2-3-2 Input AND-OR-Invert	64
Dual 3-Input NOR Gate with Inverter	4000
Dual Complementary Pair and Inverter, Unbuffered	4007UB
Dual 2-Wide 2-Input AND-OR-Invert	4085
4-Wide 2-Input AND-OR-Invert	4086

▨ Function not continued in this manual. Please check Technology Selection Guide for appropriate technology—FAST or CMOS.

Function Cross Reference Guide

DUAL FLIP-FLOPS

FUNCTION	DEVICE NUMBER	CLOCK EDGE	SET	CLEAR
D	74	↑	LOW	LOW
▨ D	4013	↑	HIGH	HIGH
JK	73	↓		LOW
JK	76	↓	LOW	LOW
JK	107	↓		LOW
JK	109	↑	LOW	LOW
JK	112	↓	LOW	LOW
JK	113	↓	LOW	
JK	114	↓	LOW	LOW
▨ JK	4027	↑	HIGH	HIGH

▨ Function not continued in this manual. Please check Technology Selection Guide for appropriate technology—FAST or CMOS.

MULTIPLE FLIP-FLOPS

FUNCTION	DEVICE NUMBER	RESET (LEVEL)	CLOCK EDGE	OUTPUT
Quad	173	HIGH	↑	True
Quad D	175	LOW	↑	True, Comp
▨ Quad D	40175	LOW	↑	True
▨ Quad D with Enable	379		↑	True, Comp
▨ Quad D, 3-State	4079	HIGH	↑	True
Quad D, 3-State	8T10	HIGH	↑	True
Hex D	174	LOW	↑	True
Hex D with Enable	378		↑	True
Octal D	273	LOW	↑	True
Octal D, 3-State	374		↑	True
Octal D with Enable	377		↑	True
Octal D, 3-State	534		↑	Comp
▨ Octal D, 3-State	564		↑	Comp
▨ Octal D, 3-State	574		↑	True
▨ Octal D, 3-State	40374		↑	True
Octal D, 3-State	8TS806		↑	True
Octal D, 3-State	8TS808		↑	Comp
Octal D, 3-State, MOS Compatible Outputs	364		↑	True

▨ Function not continued in this manual. Please check Technology Selection Guide for appropriate technology—FAST or CMOS.

Function Cross Reference Guide

OTHER REGISTERS, REGISTER FILES

FUNCTION	DEVICE NUMBER	BITS	SERIAL ENTRY	PARALLEL ENTRY*	CLOCK
Quad 2 Port	298	4×2		2D (mux)	↓
Quad 2 Port	398	4×2		2D (mux)	↑
Quad 2 Port	399	4×2		2D (mux)	↑
Register File, OC	170	4×4		4A	↓
Multiple Port Register File, 3-State	172	16		3D (mux)	↓
4×4 Register File, 3-State	670	4×4		4A	↓
16×5 FIFO, 3-State	225	5		5S	↑
4×16 FIFO	40105	4	D	4S	
10-Bit Register, Noninverting, 3-State	821	10		2D	↑
10-Bit Register, Inverting, 3-State	822	10		2D	↑
9-Bit Register, Noninverting, 3-State	823	9		2D	↑
9-Bit Register, Inverting, 3-State	824	9		2D	↑
8-Bit Register, Noninverting, 3-State	825	8		2D	↑
8-Bit Register, Inverting, 3-State	826	8		2D	↑

*D = D type input, A = Asynchronous data input, S = Synchronous data input

▨ Function not continued in this manual. Please check Technology Selection Guide for appropriate technology—FAST or CMOS.

Function Cross Reference Guide

SHIFT REGISTERS

FUNCTION	DEVICE NUMBER	BITS	SERIAL ENTRY	PARALLEL ENTRY	CLOCK
Serial In/Serial Out Shift Register	91	8	D_A and D_B		↑
▨ Serial In/Serial Out Shift Right	4006	(2 × 4) (2 × 5)	D		↓
▨ Serial In/Serial Out Shift Right	4031	64	$D_A + D_B$		↑
▨ Dual Serial In/Serial Out Shift Right, 3-State	4517	(4 × 16)	D		↑
▨ Quad Serial In/Serial Out Shift Right	4731	64	D		↓
▨ Serial In/Serial Out Variable Length Shift Right	4557	1 to 64	$D_A + D_B$		↑ and ↓
▨ Serial In/Serial Out Shift Right, 3-State	4094	8	D		↑
Parallel In/Serial Out	674	16	D	16S	↓
Serial In/Serial/Parallel Out	675	16	D		↓
Serial/Parallel In/Serial Out	676	16	D	16S	↓
Parallel/Serial In/Serial Out Shift Right	94	4	D	2 × 4A (mux)	↑
Parallel/Serial In/Serial Out Shift Right	165	8	D	8A	↑
Parallel/Serial In/Serial Out Shift Right	166	8	D	8S	↑
Parallel/Serial In/Serial Out Shift Right	195	4	J, $\overline{K}$	4S	↑
Parallel/Serial In/Serial Out Shift Right	199	8	J, K	8S	↑
▨ Parallel/Serial In/Serial Out Shift Right	597	8	D	8S	↑
▨ Parallel/Serial In/Serial Out Shift Right	4014	8	D	8S	↑
▨ Parallel/Serial In/Serial Out Shift Right	4021	8	D	8A	↑
Parallel/Serial In/Serial Out Shift Right	8274	10	D	10S	↓
▨ Parallel/Serial In/Serial Out Shift Right, 3-State	598	8	S0, S1	8S	↑
Serial In/Parallel Out Shift Right	164	8	D_0 and D_1		↑
Serial In/Parallel Out Shift Right, with Reset	8273	10	D		↓ or ↑
▨ Dual Serial In/Parallel Out Shift Right	4015	4	D		↑
▨ Serial In/Parallel Out, 3-State	595	8	D		↑
▨ Serial In/Parallel Out, OC	596	8	D		↑
Serial In/Parallel Out	673	16	D		↓
Parallel In/Serial In/Parallel Out Shift Right	95	4	D	5A	↓
Parallel In/Serial In/Parallel Out Shift Right	96	5	D	5A	↑
▨ Parallel In/Serial In/Parallel Out Shift Right	40195	4	J, $\overline{K}$	4S	↑
Parallel In/Serial In/Parallel Out Shift Right	8271	4	D	4S	↓
Parallel In/Serial In/Parallel Out Shift Right	82S71	4	D	4S	↓
▨ Parallel In/Serial In/Parallel Out Shift Right	4035	4	J, $\overline{K}$	4S	↑
Parallel In/Serial In/Parallel Out Shift Right, 3-State	295	4	D	4S	↓
Parallel In/Serial In/Parallel Out Shift Right, 3-State	395	4	D	4S	↓
▨ Parallel In/Serial In/Parallel Out Shift Right, 3-State	322	8	$D_0 + D_1$	8S (I/O)	↑
Parallel In/Serial In/Parallel Out Bidirectional	194	4	Dr, D_L	4S	↑
▨ Parallel In/Serial In/Parallel Out Bidirectional	198	8	Dr, D_L	8S	↑
▨ Parallel In/Serial In/Parallel Out Bidirectional	40194	4	Dr, D_L	4S	↑
▨ Parallel In/Serial In/Parallel Out Bidirectional, 3-State	299	8	Dr, D_L	8S	↑
▨ Parallel In/Serial In/Parallel Out Bidirectional, 3-State	323	8	Dr, D_L	8S (I/O)	↑
▨ Parallel In/Serial In/Parallel Out Bidirectional, 3-State	40194	4	Dr, D_L	4S	↑
4-Bit Shifter, 3-State	350	4		4A	

S = Synchronous, A = Asynchronous

▨ Function not continued in this manual. Please check Technology Selection Guide for appropriate technology—FAST or CMOS.

Function Cross Reference Guide

LATCHES

FUNCTION	DEVICE NUMBER	COMMON CLEAR (LEVEL)	ENABLE INPUT (LEVEL)	OUTPUT
Quad D	75		2 (H)	True, Comp
Quad D	375		2 (H)	True, Comp
Quad D	4042		2 (H)	True
Quad SR	279			True
Quad SR, 3-State	4043			True
Quad SR, 3-State	4044			True
Dual 4-Bit Transparent	116	LOW	2 (L)	True
Dual 4-Bit Addressable	256	LOW	1 (L)	True
Dual 4-Bit, Strobed	4508	HIGH	1 (L)	True
Dual 8-Bit, 3-State	604			True
Dual 8-Bit, OC	605			True
6-Bit (2-Bit and 4-Bit)	8T3404		1 (L)	Comp
8-Bit Addressable	259	LOW	1 (H)	True
8-Bit Addressable	4724	HIGH	1 (L)	True
8-Bit Addressable	9334	LOW	1 (L)	True
8-Bit, Noninverting, 3-State	845	LOW	1 (H)	True
8-Bit, Inverting, 3-State	846	LOW	1 (H)	Comp
9-Bit, Noninverting, 3-State	843	LOW	1 (H)	True
9-Bit, Inverting, 3-State	844	LOW	1 (H)	Comp
10-Bit, Noninverting, 3-State	841		1 (H)	True
10-Bit, Inverting, 3-State	842		1 (H)	Comp
Octal, 3-State	373		1 (H)	True
Octal, Multimode, Buffered	412	LOW		True
Octal, Multimode, Buffered	432	LOW		Comp
Octal Inverting, 3-State	533		1 (H)	Comp
Octal, Transparent, Bidirectional	543		4 (L)	True
Octal, Transparent, Bidirectional	544		4 (L)	Comp
Octal, Transparent, Inverting, 3-State	563		1 (H)	Comp
Octal, Transparent, 3-State	573		1 (H)	True
Octal Inverting, 3-State	533		1 (H)	Comp
Octal Transparent, 3-State	40373		1 (H)	True
Octal Transparent, 3-State	8TS805		1 (H)	True
Octal Inverting, 3-State	8TS807		1 (H)	Comp
Octal, 3-State with MOS Compatible Outputs	363		1 (H)	True

▨ Function not continued in this manual. Please check Technology Selection Guide for appropriate technology—FAST or CMOS.

Function Cross Reference Guide

MULTIPLEXERS

FUNCTION	DEVICE NUMBER	ENABLE INPUT (LEVEL)	SELECT INPUTS	OUTPUT
Quad 2-Input	157	1 (L)	1	True
Quad 2-Input	158	1 (L)	1	True
Quad 2-Input	298	Clocked ⌝_	1	True, Latched
Quad 2-Input	398	1 (H)	1	True, Comp Registered
Quad 2-Input	399	1 (H)	1	True, Registered
Quad 2-Input	4019		2	True
Quad 2-Input	4519		2	True
Quad 2-Input	8266		2	True
Quad 2-Input	9322	1 (L)	1	True
Quad 2-Input, 3-State	257		1	True
Quad 2-Input, 3-State	258		1	Comp
Quad 2-Input, OC	8234		2	Comp
Dual 4-Input	153	2 (L)	2	True, Comp
Dual 4-Input	352	2	2	Comp
Dual 4-Input	9309		2	True, Comp
Dual 4-Input	4539	2 (L)	2	True
Dual 4-Input, 3-State	253		2	True
Dual 4-Input, 3-State	353	2	2	Comp
8-Input	9312	1 (L)	3	True, Comp
8-Input	151	1 (L)	3	True, Comp
8-Input, 3-State	251		1	True, Comp
8-Input, 3-State	356	1 (L)	3	True, Latched
8-Input, 3-State	354	2 (L)	3	True, Latched
8-Input, 3-State	4512	1 (L)	3	True
16-Input	150	1 (L)	4	Comp

ANALOG MULTIPLEXERS/DEMULTIPLEXERS AND SWITCHES

FUNCTION	DEVICE NUMBER
Triple 2-Channel Mux/Demux	4053
Dual 4-Channel Mux/Demux	4052
8-Channel Mux/Demux	4051

FUNCTION	DEVICE NUMBER
16-Channel Mux/Demux	4066
Quad Bilateral Switches	4016
Quad Bilateral Switches	4067
Quad Bilateral Switch	4316
8-Channel Analog MUX/DeMUX with Latch	4351
Dual 4-Channel Analog MUX/DeMUX with Latch	4352
Triple 2-Channel Analog MUX/DeMUX with Latch	4353

▨ Function not continued in this manual. Please check Technology Selection Guide for appropriate technology—FAST or CMOS.

Function Cross Reference Guide

COUNTERS

FUNCTION	DEVICE NUMBER	MODULUS	PARALLEL ENTRY	PRESETTABLE	CLOCK EDGE
Asynchronous	90	2 × 5			↓
Asynchronous	290	2 × 5			↓
Asynchronous	92	2 × 6			↓
Asynchronous	93	2 × 8			↓
Asynchronous	293	2 × 8			↓
Asynchronous	176	2 × 5	A	X	↓
Asynchronous	177	2 × 8	A	X	↓
Asynchronous	197	2 × 8	A	X	↓
Asynchronous	290	2 × 5			↓
Asynchronous	293	2 × 8			↓
Asynchronous	390	2 × 5			↓
Asynchronous	393	2 × 8			↓
Asynchronous	490	2 × 5			↓
Asynchronous	4020	12			↓
Asynchronous	4024	7			↓
Asynchronous	4040	14			↓
Asynchronous with Oscillator	4060	14			
Synchronous	160	10	S	X	↑
Synchronous	161	16	S	X	↑
Synchronous	162	10	S	X	↑
Synchronous	163	16	S	X	↑
Synchronous, 3-State	751	256	S	X	↑
Synchronous, 3-State	752	100	S	X	↑
Synchronous	4256	16	A		↑ or ↓
Synchronous	40161	16	S	X	↑
Synchronous	40163	16	S	X	↑
Synchronous (Dual)	4518	10			↑ or ↓
Synchronous (Dual)	4520	16			↑ or ↓
Up/Down	168	10	S	X	↑
Up/Down	169	16	S	X	↑
Up/Down	190	10	A	X	↑
Up/Down	191	16	A	X	↑
Up/Down	192	10	A	X	↑
Up/Down	193	16	A	X	↑
Up/Down	269	8	S	X	↑
Up/Down	4029	10, 16	A	X	↑
Up/Down	4510	10	A	X	↑
Up/Down	4516	16	A	X	↑
Up/Down	40193	16	A	X	↑
Up/Down, 3-State	568	10	S	X	↑
Up/Down, 3-State	569	16	S	X	↑
Up/Down, 3-State	579	8	S (I/O)	X	↑
Up/Down, 3-State	779	8	S (I/O)	X	↑
Frequency Divider	4059	Programmable 3 to 15,999			↑
Johnson	4017	10			↑ or ↓
Johnson	4018	5	A		
Johnson	4022	8			↑ or ↓

S = Synchronous A = Asynchronous

▨ Function not continued in this manual. Please check Technology Selection Guide for appropriate technology—FAST or CMOS.

Function Cross Reference Guide

TRI-STATE BUFFERS, DRIVERS AND TRANSCEIVERS

FUNCTION	DEVICE NUMBER	OUTPUT
Quad Buffer	125	True
Quad Buffer	126	True
Quad Bus Driver	8T09	
Quad Bus Transceiver	242	Comp
Quad Bus Transceiver	243	True
Quad Bus Transceiver	1242	Comp
Quad Bus Transceiver	1243	True
Quad Bus Transceiver	8T34	Comp
Quad Bus Transceiver	8T126	Comp
Quad Bus Transceiver	8T127	Comp
Quad Bus Transceiver	8T128	True
Quad Bus Transceiver	8T129	True
Hex Buffer	365	True
Hex Inverter	366	Comp
Hex Buffer, 4-Bit and 2-Bit	367	True
Hex Inverter, 4-Bit and 2-Bit	368	Comp
Hex Buffer	8T95	True
Hex Inverter	8T96	Comp
Hex Buffer	8T97	True
Hex Inverter	8T98	Comp
Hex Buffer	40097	True
Hex Buffer	40098	Comp
Octal Buffer	240	Comp
Octal Buffer	241	True
Octal Buffer	244	True
Octal Buffer	40240	Comp
Octal Buffer	40244	True
Octal Buffer	540	Comp
Octal Buffer	541	True
Octal Buffer with Parity Generator/Checker	455	Comp
Octal Buffer with Parity Generator/Checker	456	True
Octal Buffer	1240	Comp
Octal Buffer	1241	True
Octal Buffer	1244	True
Octal Buffer with Parity Generator-Checker	655	Comp
Octal Buffer with Parity Generator-Checker	656	True
10-Bit Buffer	827	True
10-Bit Buffer	828	Comp
Octal Transceiver	245	True
Octal Transceiver	545	True
Octal Transceiver with IEEE-488 Termination Resistors	588	True
Octal Transceiver	620	Comp
Octal Transceiver	623	True
Octal Transceiver	640, 640-1	Comp
Octal Transceiver	643	True, Comp
Octal Transceiver	645, 645-1	True
Octal Bus Transceiver with Parity Generator-Checker	657	True
Octal Bus Transceiver	1245	True
Octal Transceiver	40245	True
Octal Transceiver	8T125	Comp
Octal Transceiver/Register	646	True
Octal Transceiver/Register	648	Comp
10-Bit Transceiver	861	True
10-Bit Transceiver	862	Comp
9-Bit Transceiver	863	True
9-Bit Transceiver	864	Comp

▨ Function not continued in this manual. Please check Technology Selection Guide for appropriate technology—FAST or CMOS.

Function Cross Reference Guide

LEVEL TRANSLATORS

FUNCTION	DEVICE NUMBER
Hex Inverting Buffer, Up to 15V Input, TTL Level Output	4049
Hex Non-Inverting Buffer, Up to 15V Input, TTL Level Output	4050
Quad Voltage Translator, 3-State, TTL Input, 15V Output	4104
Quad Transceiver, MOS/CMOS to TTL	8T26
Quad Transceiver, MOS/CMOS to TTL	8T28

PRIORITY ENCODERS

FUNCTION	DEVICE NUMBER	INPUT ENABLE (LEVEL)	INPUT/OUTPUT (LEVEL)
8-to-3	148	LOW	Active-LOW
8-to-3	4532	HIGH	Active-HIGH
10-to-4 (BCD)	147		Active-LOW

DECODERS/DEMULTIPLEXERS

FUNCTION	DEVICE NUMBER	ADDRESS INPUTS	ENABLE (LEVEL)	OUTPUT (LEVEL)
Dual 1 of 4	139	2 + 2	1 (L) + 1 (L)	4 (L) + 4 (L)
Dual 1 of 4	155	2	2 (L) + 1 (L), 1 (H)	4 (L) + 4 (L)
Dual 1 of 4	156	2	2 (L) + 1 (L), 1 (H)	4 (L) + 4 (L)
Dual 1 of 4	539	2 + 2	1 (L) + 1 (L)	4 (H) + 4 (H)
Dual 1 of 4	4555	2 + 2	1 (L) + 1 (L)	4 (H)
Dual 1 of 4	4556	2 + 2	1 (L) + 1 (L)	4 (L)
1 of 8	138	3	2 (L) 1 (H)	8 (L)
1 of 8	237	3	1 (L), 1 (H)	8 (H)
1 of 8	238	3	2 (L), 1 (H)	8 (H)
1 of 8	538	3	2 (L), 2 (H)	8 (H)
1 of 8	82S50	4 (BCD)		8 (L)
1 of 10	42	4 (BCD)		10 (L)
1 of 10, OC	45	4 (BCD)		10 (L)
1 of 10, OC	145	4 (BCD)		10 (L)
1 of 10, OC	445	4 (BCD)		10 (L)
1 of 10	537	4	1 (L), 1 (H)	10 (H)
1 of 10	4028	4 (BCD)		10 (H)
1 of 10	9301	4 (BCD)		10 (L)
1 of 10	82S52	4 (BCD)		10 (L)
1 of 16	154	4	2 (L)	16 (L)
1 of 16	4514	4 (Latched)	1 (L)	16 (H)
1 of 16	4515	4 (Latched)	1 (L)	16 (L)
Octal, with Address Latches and Acknowledge	547	3	1 (L), 2 (H)	8 (L)
Octal, with Acknowledge	548	3	2 (L), 2 (H)	8 (L)
BCD to 7 Segment Decoder/Driver	4511	4 (Latched)	1 (L)	7 (H)
BCD to 7 Segment Decoder/Driver	4543	4 (Latched)		7 (H)

BUFFERS, DRIVERS AND RECEIVERS

FUNCTION	DEVICE NUMBER	OUTPUT
Quad 2-Input NOR Buffer	128	
Quad Buffer	4041	True, Comp
Hex Buffer	4049	Comp
Hex Buffer	4050	True
Strobed Hex Inverter/Buffer	4502	Comp
Dual 4-Input NAND Line Driver	140	
Dual Line Driver (AND/OR)	8T13	
Dual EIA-232B/MIL Line Driver	8T15	Comp
Dual EIA-232B/MIL Receiver	8T16	
Dual Line Driver for IBM 360/370 Interface	8T23	
Dual Line Receiver for IBM 360/370 Interface	8T24	
Hex Bus Receiver (DM8837)	8T37	

▨ Function not continued in this manual. Please check Technology Selection Guide for appropriate technology—FAST or CMOS.

Function Cross Reference Guide

OPEN COLLECTOR, BUFFERS, DRIVERS, AND TRANSCEIVERS

FUNCTION	DEVICE NUMBER	OUTPUT
Quad Bus Transceiver	8T38	
Quad Bus Transceiver	8T26	Comp
Quad Bus Transceiver	8T28	True
Hex Inverter	05	Comp
Hex Inverter/Driver	06	Comp
Hex Buffer/Driver	07	True
Hex Buffer/Driver	16	Comp
Hex buffer/Driver	17	True
Octal Transceiver	621	True
Octal Transceiver	622	Comp
Octal Transceiver	641, 641-1	True
Octal Transceiver	642, 642-2	Comp
Octal Transceiver and Registers	647	True
Octal Transceiver and Registers	649	Comp
BCD to Decimal Decoder/Driver	45	Active-LOW
BCD to Decimal Decoder/Driver	145	Active-LOW

MULTIVIBRATORS AND PHASE LOCKED LOOPS

FUNCTION	DEVICE NUMBER
Monostable Multivibrator	121
Dual Retriggerable Monostable Multivibrator	123
Dual Monostable Multivibrator	221
Dual Retriggerable Monostable Multivibrator	423
Dual Monostable Multivibrator	4528
Dual Retriggerable Monostable Multivibrator	4538
Monostable/Astable Multivibrator	4047
Digital Phase Locked Loop Filter	297
Phase Locked Loop	4046

ARITHMETIC FUNCTIONS

FUNCTION	DEVICE NUMBER
4-Bit Binary Full Adder, Ripple Carry	83
4-Bit Binary Full Adder, Fast Carry	283
4-Bit Binary Full Adder	4008
4-Bit BCD Full Adder	82S83
4-Bit ALU	181
4-Bit ALU	381
4-Bit ALU	382
4-Bit ALU	82S83
Look Ahead Carry Generator	182
8-Bit Serial/Parallel Two's Complement Multiplier	384
8 x 8 Multiplier w/Latch	557
8 x 8 Multiplier	558
BCD Adder	583
8-Bit Serial Multiplier Adder, Subtractor	784
ALU Function Generator	881
32-Bit Look-Ahead-Carry Generator	882

COMPARATORS

FUNCTION	DEVICE NUMBER
4-Bit Comparator	85
4-Bit Comparator	4585
5-Bit Comparator	9324
8-Bit Comparator	521
8-Bit Comparator	688

PARITY

FUNCTION	DEVICE NUMBER
8-Bit Odd/Even Parity Checker	180
8-Bit Parity Generator/Checker	8262
8-Bit Parity Generator/Checker	82S62
9-Bit Odd/Even Parity Generator/Checker	280
13-Bit Parity Generator/Checker	4531

SPECIAL FUNCTIONS

FUNCTION	DEVICE NUMBER
64-Bit FAST Random Access Memory	189
Memory Error Detector/Corrector, 3-State	630
Memory Error Detector/Corrector, OC	631
Dual-Port RAM Controller with Dynamic Memory Refresh	764
Dual Port RAM Controller without Latch	765
IEC/IEEE Bus Interface	4738
Frequency Synthesizer	4750
A.C. Motor Control Circuit	4752
18-Element Bar Graph LCD Driver	4754

▨ Function not continued in this manual. Please check Technology Selection Guide for appropriate technology—FAST or CMOS.

Family Characteristic Specifications

INTERFACING COMMON LOGIC FAMILIES

From	To	ECL		TTL				CMOS			
										4000B	
		10K	100K	STD	S	FAST	LS	HC	HCT	$V_{DD}=5V$	$V_{DD}>5V$
ECL	10K	D	D	T	T	T	T	T	T	T	T
	100K	D	D	T	T	T	T	T	T	T	T
TTL	STD	T	T	D	D	D	D	P	D	P	T
	S	T	T	D	D	D	D	P	D	P	T
	FAST	T	T	D	D	D	D	P	D	P	T
	LS	T	T	D	D	D	D	P	D	P	T
CMOS	HC	T	T	D	D	D	D	D	D	D	T
	HCT	T	T	D	D	D	D	D	D	D	T
	4000B at 5V	T	T	D	D	D	D	D	D	D	T
	4000B $V_{DD}>5V$	T	T	T	T	T	T	T	T	T	D

D — Direct interface
P — Pullup resistor required
T — Level translator required

10K & 100K ECL Product List

10K ECL

DEVICE TYPE	DESCRIPTION
10100	Quad 2-Input NOR Gate
10101	Quad OR/NOR Gate
10102	Quad 2-Input NOR Gate
10103	Quad 2-Input OR Gate
10104	Quad 2-Input AND Gate
10105	Triple 2-3-2 Input OR/NOR Gate
10106	Triple 4-3-3 Input NOR Gate
10107	Triple 2-Input Exclusive-OR/Exclusive-NOR Gate
10108	Dual 3-Input AND/NAND Gate
10109	Dual 4-5 Input OR/NOR Gate
10110	Dual 3-Input/3-Output OR Gate (Line Driver)
10111	Dual 3-Input/3-Output NOR Gate (Line Driver)
10112	Dual 3-Input/3-Output (1 OR and 2 NOR) (Line Driver)
10113	Quad Exclusive-OR Gate with Enable
10114	Triple Line Receiver
10115	Quad Line Receiver
10116	Triple Line Receiver
10117	Dual 2-Wide 2-3 Input OR-AND/OR-AND-INVERT Gate
10118	Dual 2-Wide 3-Input OR-AND Gate
10119	4-Wide 4-3-3-3 Input OR-AND Gate
10121	4-Wide OR-AND/OR-AND-INVERT Gate
10123	Triple 4-3-3-Input Bus Driver
10124	Quad TTL to ECL Translator
10125	Quad ECL to TTL Translator
10129	Quad TTL/IBM Bus Receiver/Latch
10130	Dual D-Type Latch
10131	Dual D-Type Master-Slave Flip-Flop
10132	Dual 2-Input Multiplexer with Clocked D-Type Latches and Common Reset
10133	Quad Latch with D-Type Inputs and Enable Outputs

DEVICE TYPE	DESCRIPTION
10134	Dual 2-Input Multiplexer with Clocked D-Type Latches
10135	Dual JK Master-Slave Flip-Flop
10136	Universal Hexadecimal Counter
10137	Universal Decade Counter
10141	4-Bit Universal Shift Register
10149	1024-Bit, 4-Bits per Word PROM
10155	16-Bit, 2-Bits per Word CAM
10158	Quad 2-to-1 Multiplexer (Non-Inverting)
10159	Quad 2-to-1 Multiplexer (Inverting)
10160	12-Bit Parity Checker/Generator
10161	3-Bit Decoder with 2 Enable Inputs (1-of-8 LOW)
10162	3-Bit Decoder with 2 Enable Inputs (1-of-8 HIGH)
10164	8-Input Multiplexer with Enable Input
10165	8-Input Priority Encoder
10171	Dual 2-Bit Decoder (1-of-4 Lines LOW)
10172	Dual 2-Bit Decoder (1-of-4 Lines HIGH)
10173	Quad 2-Input Multiplexer with Latched Outputs
10174	Dual 4-to-1 Multiplexer (with Enable)
10175	Quint D-Latch w/Com Reset and 2 Wired-OR Com Clock Inputs
10176	Hex D-Type Master-Slave Flip-Flop
10179	Look-Ahead Carry Block-Arithmetic Functions
10180	Dual High-Speed Adder/Subtractor
10181	4-Bit Logic Unit/Function Generator
10188	Hex Buffer (Non-Inverting)
10189	Hex Inverter
10192	Quad Differential Line Driver
10210	Dual 3-Input/3-Output (High-Speed) OR Gate
10211	Dual 3-Input/3-Output (High-Speed) NOR Gate
10216	Triple Differential OR/NOR Line Receiver (High-Speed)
10231	Dual Type-D Master-Slave Flip-Flop (High-Speed)

100K ECL

DEVICE TYPE	DESCRIPTION
100101	Triple 5-Input OR/NOR Gate
100102	Quint 2-Input OR/NOR Gate
100107	Quint Exclusive-OR/NOR
100112	Quad Driver
100113	Quad Driver
100114	Quint Differential Line Receiver
100117	Triple AOI
100118	5-Wide AOI
100122	9-Gate Buffer
100123	Hex Bus Driver
100124	Hex TTL to ECL Translator
100125	Hex ECL to TTL Translator
100126	Back Plane Driver
100131	Triple D Flip-Flop
100136	Multipurpose Counting Register
100141	8-Bit Universal Shift Register
100145	16 × 4 Register File
100150	Hex D Latch
100151	Hex D Flip-Flop

DEVICE TYPE	DESCRIPTION
100155	Quad Multiplexer/Latch
100158	8-Bit Shift Matrix
100160	Dual 9-Bit Parity Generator
100163	Dual 8-Input Multiplexer
100164	16-Input Multiplexer
100165	Universal Priority Encoder
100166	9-Bit Comparator
100170	Universal Decoder
100171	Triple 4-Input Multiplexer
100175	100K–10K Translator
100179	Look Ahead Carry Generator
100180	Fast 6-Bit Adder
100181	4-Bit ALU Binary/Decimal
100255	TTL-100K Translator/Bidirectional
SAF/SAB1034	4-to-1 ECL Frequency Divider
SAF/SAB1534	4-to-1 ECL Frequency Divider

10K & 100K ECL Selection Guide

DEVICE TYPE	DESCRIPTION
OR/NOR Gates	
10100	Quad 3-Input NOR (1 Input Common)
10101	Quad 2-Input OR/NOR (1 Input Common)
10102	Quad 2-Input 3 NOR and 1 OR/NOR
10103	Quad 2-Input 3 OR and 1 OR/NOR
10105	Triple 2-3-2 Input OR/NOR
10106	Triple 4-3-3 Input NOR
10109	Dual 4-5 Input OR/NOR
10110	Dual 3-Input/3-Output OR (Line Driver)
10111	Dual 3-Input/3-Output NOR (Line Driver)
10210	High-Speed Dual 3-Input/3-Output OR
10211	High-Speed Dual 3-Input/3-Output NOR
100101	Triple 5-Input OR/NOR
100102	Quint 2-Input OR/NOR
Exclusive OR/NOR Gates	
10107	Triple 2-Input Exclusive-OR/Exclusive-NOR
10113	Quad Exclusive-OR (With Enable)
100107	Quint Exclusive-OR/Exclusive-NOR
AND, AND/NAND Gates	
10104	Quad 2-Input AND
10108	Dual 3-Input AND/NAND
AND-OR-Invert Combination Gates	
10117	Dual 2-Wide 2-3 Input OR-AND/OR-AND-Invert
10118	Dual 2-Wide 3-Input OR-AND
10119	4-Wide 4-3-3-3 Input OR-AND
10121	4-Wide OR-AND/OR-AND-Invert
100117	Triple 2-2-1 Input OR/AND
10118	Quint 5-4-4-4-2 Input OR/AND
Buffer Gates	
10188	Hex Buffer
10189	Hex Inverter
100122	9 Buffer Gates
Flip-Flops	
10131	Dual D-Type Master-Slave
10176	Hex D-Type Master-Slave
10231	High-Speed Dual D-Type Master-Slave
100131	Triple D
100151	Hex D Master-Slave
10135	Dual JK Master-Slave
Latch	
10130	Dual D-Type
10133	Quad with D-Type Inputs and Enable Outputs
10175	Quint D, Common Reset, 2-Wired-OR Common Clock Inputs
100150	Hex D
Registers/Shift Registers	
10141	4-Bit Universal Shift Register
100136	4-Stage Counter/Shift Register
100141	8-Bit Shift Register
100145	16 x 4-Bit Register File
100158	8-Bit Shift Matrix
Counters	
10136	Universal Hexadecimal
10137	Universal Decade
100136	4-Stage Counter/Shift Register

DEVICE TYPE	DESCRIPTION
Multiplexers/Encoders	
10132	Dual 2-Input Multiplexer with Clocked D Latches and Common Reset
10134	Dual 2-Input Multiplexer with Clocked D Latches
10158	Quad 2-to-1 Multiplexer (Non-Inverting)
10159	Quad 2-to-1 Multiplexer (Inverting)
10164	8-Input Multiplexer with Enable Input
10165	8-Input Priority Encoder
10173	Quad 2-Input Multiplexer with Latched Outputs
10174	Dual 4-to-1 Multiplexer with Enable
100155	Quad Multiplexer with Latch
100163	Dual 8-Line Multiplexer
100164	16-Line Multiplexer
100165	Universal Priority Encoder
100171	Triple 4-Line Multiplexer
Decoders/Demultiplexer	
10161	1-of-8 Lines (LOW) With Two Enable Inputs
10162	1-of-8 Lines (HIGH) With Two Enable Inputs
10171	Dual 1-of-4 Lines (LOW)
10172	Dual 1-of-4 Lines (HIGH)
100170	Universal Decoder/Demux
Arithmetic Operators	
10160	12-Bit Parity Checker/Generator
10179	Look-Ahead Carry Block
10180	Dual 2-Bit Adder/Subtractor
10181	4-Bit Arithmetic Logic Unit
100160	9-Bit Parity/8-Bit Comparator
100166	9-Bit Magnitude Comparator
100179	Look Ahead Carry Generator
100180	High-Speed Adder
100181	4-Bit Arithmetic Logic Unit
Bus and Line Drivers	
10110	Dual 3-Input/3-Output OR Line Drivers
10111	Dual 3-Input/3-Output NOR Line Driver
10112	Dual 3-Input/3-Output Line Driver
10123	Triple 4-3-3 Input Bus Driver
10192	Quad Differential Line Driver
100112	Quad High Fan-Out Driver
100113	Line Driver
100123	Hex Bus Driver
100126	Back Plane Driver
Receivers	
10114	Triple Line Receiver
10115	Quad Line Receiver
10116	Triple Line Receiver
10129	Quad TTL/IBM Bus Receiver
10216	Triple Differential OR/NOR Line Receiver
100114	Quint Line Receiver
Translators	
10124	Hex TTL to ECL Translator
10125	Hex ECL to TTL Translator
10129	Quad TTL/IBM Bus Receiver/Latch
100175	100K–10K Translator
Memories	
10149	1024-Bit, 4 Bits per Word PROM
10155	16-Bit, 2 Bits per Word CAM

8200/82S00/9300/9600 Availability Guide

DEVICE TYPE	DESCRIPTION	AVAIL-ABILITY
8234	2-Input, 4-Bit Digital Multiplexer	A
82S41	Quad Exclusive-OR Gate	C
8242	Quad Exclusive-NOR Gate	C
82S42	Quad Exclusive-NOR Gate	C
82S50	Binary-to-Octal Decoder	C
82S52	BCD-to-Decimal Decoder	C
8262	8-Bit Parity Generator/Checker	C
82S62	8-Bit Parity Generator/Checker	C
8266	2-Input, 4-Bit Digital Multiplexer	A
8271	4-Bit Shift Register	A
82S71	4-Bit Shift Register	C
8273	10-Bit SIPO Shift Register	A
8274	10-Bit PISO Shift Register	C
82S82	4-Bit Arithmetic Unit	C
82S83	4-Bit BCD Adder	C
8815	Dual 4-Input NOR	C
8881	Quad 2-Input NAND, OC	C
8890	Hex Inverter	C
8891	Hex Inverter	A
9301	BCD-to-Decimal Decoder	A
9309	Dual 4-Input Multiplexer	A
9310	4-Bit Decade Counter	C
9312	8-Input Digital Multiplexer	A
9316	4-Bit Binary Counter	C
9322	Data Selector/Multiplexer	C
9324	5-Bit Comparator	C
9334	8-Bit Addressable Latch	A
9386	Quad Exclusive-NOR	A
9601	Retriggerable Monostable Multivibrator	A
9602	Dual Monostable Multivibrator	C
8T09	Quad Bus Driver, 3-State	A
8T10	Quad D-Type Bus Latch	A
8T13	Dual Line Driver	A
8T15	Dual EIA/MIL Line Receiver	C
8T16	Dual Communications EIA/MIL Line Receiver	A

A = Available in Military C = Commercial Grade Only

DEVICE TYPE	DESCRIPTION	AVAIL-ABILITY
8T20	Bidirectional Monostable Multivibrator	C
8T22	Retriggerable Monostable Multivibrator (74122, 9601)	C
8T23	Dual Line Driver for IBM 360/370 Interface (75123)	C
8T24	Triple Line Receiver for IBM 360/370 Interface (75124)	C
8T26A	Quad Bus Driver/Receiver	A
8T28	Quad Bus Driver/Receiver, Non-Inverting	A
8T34	Quad Bus Transceiver (DM8834)	C
8T37	Hex Bus Receiver (DM8837)	C
8T38	Quad Bus Transceiver (DM8838)	C
8T95	Hex Buffer	C
8T96	Hex Inverter	C
8T97	Hex Buffer	A
8T98	Hex Inverter	A
8T125	Octal Transceiver, Inverting	A
8T126	Quad Bus Driver/Receiver, Inverting	A
8T127	Quad Bus Driver/Receiver, Inverting	A
8T128	Quad Bus Driver/Receiver, Non-Inverting	A
8T129	Quad Bus Driver/Receiver, Non-Inverting	A
8T245	Octal Transceiver	C
8T380	Quad Bus Receiver	C

FAST™ Product Availability Guide

DEVICE	PIN	DESCRIPTION	AVAIL-ABILITY
74F00	14	Quad 2-Input NAND Gate	A
74F02	14	Quad 2-Input NOR Gate	A
74F04	14	Hex Inverter	A
74F08	14	Quad 2-Input AND Gate	A
74F10	14	Triple 2-Input NAND Gate	A
74F11	14	Triple 2-Input AND Gate	A
74F13	14	Dual 4-Input NAND Schmitt Trigger	A
74F14	14	Hex Inverter Schmitt Trigger	A
74F20	14	Dual 4-Input NAND Gate	A
74F27	14	Triple 3-Input NOR Gate	A
74F30	14	8-Input NAND Gate	A
74F32	14	Quad 2-Input OR Gate	A
74F37	14	Quad 2-Input NAND Buffer	A
74F38	14	Quad 2-Input NAND Buffer (O/C)	A
74F40	14	Quad 4-Input NAND Buffer	A
74F51	14	Dual 2-Wide 3-Input, 2-Wide 2-Input AND-OR-INVERT Gate	A
74F64	14	4-2-3-2-Input AND/OR Invert Gate	A
74F74	14	Dual D-Type Flip-Flop	A
74F83	16	4-Bit Adder with Fast Carry	A
74F85	16	4-Bit Magnitude Comparator	A
74F86	14	Quad 2-Input Exclusive-OR Gate	A
74F109	16	Dual JK Positive Edge Triggered Flip-Flop	A
74F112	16	Dual JK Negative Edge Triggered Flip-Flop	Q2 '86
74F113	16	Dual JK Negative Edge Triggered Flip-Flop w/o Reset	Q2 '86
74F114	16	Dual JK Negative Edge Triggered Flip-Flop	Q2 '86
74F125	14	Quad Buffer (3-State)	A
74F126	14	Quad Buffer (3-State)	A
74F132	16	Quad 2-Input NAND Schmitt Trigger	A
74F138	16	1-of-8 Decoder/Demultiplexer	A
74F139	16	Dual 1-of-4 Decoder/ Demultiplexer	A
74F148	16	8-Line to 3-Line Priority Encoder	A
74F151	16	8-Input Multiplexer	A
74F153	16	Dual 4-Input Multiplexer	A
74F157A	16	Quad 2-Input Multiplexer (INV)	A
74F157	16	Quad 2-Input Multiplexer (INV)	A
74F158A	16	Quad 2-Input Multiplexer (NINV)	A
74F158	16	Quad 2-Input Multiplexer (NINV)	A
74F160A	16	BCD Decade Counter, Asynchronous Reset	A
74F161A	16	4-Bit Binary Counter, Asynchronous Reset	A
74F162A	16	BCD Decade Counter, Synchronous Reset	A

A = Available *no SMD yet.
Q1' 86 = 1st Quarter of 1986 Q2 '86 = 2nd Quarter of 1986 Q3 '86 = 3rd Quarter of 1986

DEVICE	PIN	DESCRIPTION	AVAIL-ABILITY
74F163A	16	4-Bit Binary Counter, Synchronous Reset	A
74F164	16	8-Bit SIPO Shift Register	Q1 '86
74F165	16	8-Bit S/PISO Shift Register	Q1 '86
74F166	16	8-Bit S/PISO Shift Register	A
74F168	16	4-Bit Up/Down BCD Decade Synch. Counter (3-State)	A
74F169	16	4-Bit Up/Down Binary Synch. Counter (3-State)	A
74F174	16	Hex D Flip-Flop w/Master Reset	A
74F175	16	Quad D Flip-Flop w/Master Reset	A
74F181	24	4-Bit Arithmetic Logic Unit	A
74F182	16	Carry Look-Ahead Generator	A
74F189	16	4-Bit Random Access Memory (3-State)	Q2 '86
74F190	16	Asynch. Presettable Up/Down BCD Decade Counter	Q1 '86
74F191	16	Asynch. Presettable 4-Bit Up/Down Binary Counter	Q1 '86
74F192	16	Synch. Presettable Up/Down BCD Decade Counter	Q1 '86
74F193	16	Synch. Presettable 4-Bit Up/Down Binary Counter	Q1 '86
74F194	16	4-Bit Bidirectional Universal Shift Register	A
74F195	16	4-Bit Parallel Access Shift Register	A
74F198	24	8-Bit Bidirectional Universal Shift Register	A
74F199	24	8-Bit Parallel Access Shift Register	A
74F240	20	Octal Inverting Bus/Line Driver (3-State)	A
74F241	20	Octal Bus/Line Driver (3-State)	A
74F242	14	Quad Inverting Bus Transceiver (3-State)	A
74F243	14	Quad Bus Transceiver (3-State)	A
74F244	20	Octal Bus/Line Driver (3-State)	A
74F245	20	Octal Bus Transceiver (3-State)	A
74F251	16	8-Input Multiplexer (3-State)	A
74F253	16	Dual 4-Input Multiplexer (3-State)	A
74F256	16	Dual 4-Bit Addressable Latch	A
74F257A	16	Quad 2-Input Multiplexer NINV (3-State)	A
74F257	16	Quad 2-Input Multiplexer NINV (3-State)	A
74F258A	16	Quad 2-Input Multiplexer INV (3-State)	A
74F258	16	Quad 2-Input Multiplexer INV (3-State)	A
74F259	16	8-Bit Addressable Latch	A
74F260	14	Dual 5-Input NOR Gate	A
74F269	24	8-Bit Bidirectional Binary Counter (3-State)	A

FAST™ Product Availability Guide

DEVICE	PIN	DESCRIPTION	AVAIL-ABILITY
74F273	20	Octal D Flip-Flop	A
74F280A	14	9-Bit Odd/Even Parity Generator/Checker	A
74F283	16	4-Bit Binary Adder with Fast Carry	A
74F298	16	Quad 2-Input Multiplexer with Storage	A
74F299	20	Octal Shift/Storage Register (3-State)	Q1 '86
74F322	20	Octal Shift/Storage Register (3-State)	Q1 '86
74F323	20	Octal Shift/Storage Register (3-State)	Q1 '86
74F350	16	4-Bit Shifter (3-State)	A
74F352	16	Dual 4-Input Multiplexer (Inverted '153)	A
74F353	16	Dual 4-Input Multiplexer (Inverted '253) (3-State)	A
74F365	16	Hex Buffer with Common Enable (3-State)	A
74F366	16	Hex Inverter with Common Enable (3-State)	A
74F367	16	Hex Buffer, 4-Bit and 2-Bit (3-State)	A
74F368	16	Hex Inverter, 4-Bit and 2-Bit (3-State)	A
74F373	20	Octal D-Latch (3-State)	A
74F374	20	Octal D Flip-Flop (3-State)	A
74F377	20	Octal D-Type Flip-Flop with Enable	A
74F378	16	Hex D Flip-Flop with Enable	A
74F379	16	Quad D Flip-Flop with Enable	A
74F381	20	4-Bit ALU	A
74F382	20	4-Bit ALU	A
74F384	16	8-Bit Serial/Parallel Two's Complement Multiplier	Q2 '86
74F385	20	Quad Serial Adder/Subtractor	Q2 '86
74F395	16	4-Bit Cascadable S/R (3-State)	A
74F398	20	Quad 2-Port Register with True and Comp. Outputs	A
74F399	16	Quad 2-Port Register with True Outputs	A
74F412	24	Octal Multi-Mode Buffered Latch	Q3 '86
74F432	24	Octal Multi-Mode Buffered Latch	Q3 '86
74F455	24	Octal Buffer w/Parity Generator Checker	A
74F456	24	Octal Buffer w/Parity Generator Checker	A
74F521	20	Octal Comparator	A
74F524	20	8-Bit Register Comparator (O/C)	A
74F533	20	Octal Inverting D-Latch (3-State)	A
74F534	20	Octal D Inverting Flip-Flop (3-State)	A
74F537	20	1-of-10 Decoder (3-State)	Q2 '86

DEVICE	PIN	DESCRIPTION	AVAIL-ABILITY
74F538	20	1-of-8 Decoder (3-State)	Q2 '86
74F539	20	Dual 1-of-4 Decoder (3-State)	Q2 '86
74F540	20	Octal Inverting Buffer (3-State) Broadside pinout 'F240	A
74F541	20	Octal Buffer (3-State) Broadside pinout 'F244	A
74F543	24	Octal Transparent Bidirectional Latch	Q1 '86
74F544	24	Octal Transparent Bidirectional Latch	Q1 '86
74F545	20	Octal Bus Transceiver (3-State)	A
74F547	20	Octal Decoder/MUX w/Addr Latches and Acknowledge	Q3 '86
74F548	20	Octal Decoder/MUX w/Acknowledge	Q3 '86
74F563	20	Octal D Latch (3-State) Broadside pinout 'F533	Q2 '86
74F564	20	Octal D Flip-Flop (3-State) Broadside pinout 'F534	Q2 '86
74F568	20	4-Bit Decade Up/Down Counter (3-State)	A
74F569	20	4-Bit Binary Decade Up/Down Counter (3-State)	A
74F573	20	Octal D Latch (3-State) Broadside pinout 'F373	Q2 '86
74F574	20	Octal D Flip-Flop (3-State) Broadside pinout 'F374	Q2 '86
74F579	20	8-Bit Up/Down Counter, Common I/O (3-State)	A
74F588	20	GPIB Compatible Octal Transceiver	A
74F595	16	8-Bit Shift Register w/Output Latch	Q2 '86
74F597	16	8-Bit Shift Register w/Input Latch	Q2 '86
74F598	16	8-Bit Shift Register w/Input Latch	Q2 '86
74F604	28	Dual 8-Bit Latch (3-State)	A
74F605	28	Dual 8-Bit Latch (O/C)	A
74F620	20	Octal Bus Transceiver (3-State)	A
74F621	20	Octal Bus Transceiver (O/C)	A
74F622	20	Octal Bus Transceiver (O/C)	A
74F623	20	Octal Bus Transceiver (3-State)	A
74F630	28	Memory Error Detector/Corrector (3-State)	Q2 '86
74F631	28	Memory Error Detector/Corrector (O/C)	Q2 '86
74F640	20	Octal Bus Transceiver, Inverting (3-State)	A
74F641	20	Octal Bus Transceiver (O/C)	A
74F642	20	Octal Bus Transceiver, Inverting (O/C)	A
74F646	24	Octal Bus Transceiver & Register NINV (3-State)	Q2 '86
74F647	24	Octal Bus Transceiver & Register NINV (O/C)	Q2 '86
74F648	24	Octal Bus Transceiver & Register INV (3-State)	Q2 '86
74F649	24	Octal Bus Transceiver & Register NINV (O/C)	Q2 '86

A = Available *no SMD yet.
Q1' 86 = 1st Quarter of 1986 Q2 '86 = 2nd Quarter of 1986 Q3 '86 = 3rd Quarter of 1986

DIGITAL

Signetics

FAST™ Product Availability Guide

DEVICE	PIN	DESCRIPTION	AVAIL-ABILITY
74F651	24	Octal Bus Transceiver/Register INV (3-State)	Q3 '86
74F652	24	Octal Bus Transceiver/Register NINV (3-State)	Q3 '86
74F653	24	Octal Bus Transceiver/Register INV (O.C.)	Q3 '86
74F654	24	Octal Bus Transceiver/Register NINV (O.C.)	Q3 '86
74F655A	24	Octal Inverting Buffer w/Parity Gen./Checker (3-State)	A
74F656A	24	Octal Buffer w/Parity Gen./Checker (3-State)	A
74F657	24	Octal Bus Trans. w/Parity Gen./Checker (3-State)	A
74F673	24	16-Bit Serial-In, Serial/Parallel-Out Shift Register (3-State)	Q1 '86
74F674	24	16-Bit Serial/Parallel-In, Serial-Out Shift Register (3-State)	Q1 '86
74F675	24	16-Bit Serial-In, Serial/Parallel-Out Shift Register (3-State)	Q1 '86
74F676	24	16-Bit Serial/Parallel-In, Serial-Out Shift Register (3-State)	Q1 '86
74F764	40	Dual Port RAM Controller	Q2 '86
74F765	40	Dual Port RAM Controller w/o Latch	Q2 '86
74F779	16	8-Bit Up/Down Counter, Common I/O (3-State)	A
74F784	20	8-Bit Serial Multiplier and Adder/Subtractor	Q2 '86
74F804	20	Hex 2-Input NAND Driver	Q2 '86
74F805	20	Hex 2-Input NOR Driver	Q2 '86
74F808	20	Hex 2-Input AND Driver	Q2 '86
74F832	20	Hex 2-Input OR Driver	Q2 '86
74F821	24	10-Bit Register NINV	Q2 '86
74F822	24	10-Bit Register INV	Q2 '86
74F823	24	9-Bit Register NINV	Q2 '86
74F824	24	9-Bit Register INV	Q2 '86
74F825	24	8-Bit Register NINV	Q2 '86
74F826	24	8-Bit Register INV	Q2 '86
74F827	24	10-Bit Buffer NINV	Q2 '86
74F828	24	10-Bit Buffer INV	Q2 '86
74F841	24	10-Bit Latch NINV	Q2 '86
74F842	24	10-Bit Latch INV	Q2 '86
74F843	24	9-Bit Latch NINV	Q2 '86
74F844	24	9-Bit Latch INV	Q2 '86
74F845	24	8-Bit Latch NINV	Q2 '86
74F846	24	8-Bit Latch INV	Q2 '86
74F861	24	10-Bit Transceiver NINV	Q2 '86
74F862	24	10-Bit Transceiver INV	Q2 '86
75F881	24	Arithmetic Logic Unit/Function Generator	Q2 '86
75F882	24	32-Bit Look-Ahead Carry Generator	Q2 '86
74F1240	20	Octal Buffer (3-State) Light Load 'F240	A
74F1241	20	Octal Buffer (3-State) Light Load 'F241	A
74F1242	20	Quad Transceiver, Inverting (3-State) Light Load 'F242	A
74F1243	20	Quad Transceiver (3-State) Light Load 'F243	A
74F1244	20	Octal Buffer (3-State) Light Load 'F244	A
74F1245	20	Octal Bus Transceiver (3-State) Light Load 'F245	Q1 '86
74F3037	16	Quad 2-Input 30Ω Transmission Line Driver	A
74F3038	16	Quad 2-Input 30Ω Transmission Line Driver (O/C)	A
74F3040	16	Dual 4-Input 30Ω Transmission Line Driver	A
74F30240	24	Octal Inverting 30Ω Transmission Line Driver	Q2 '86
74F30241	24	Octal 30Ω Transmission Line Driver	Q2 '86
74F30244	24	Octal 30Ω Transmission Line Driver	Q2 '86

A = Available *no SMD yet.
Q1' 86 = 1st Quarter of 1986 Q2 '86 = 2nd Quarter of 1986 Q3 '86 = 3rd Quarter of 1986

FAST ORDERING INFORMATION

PACKAGES	COMMERCIAL RANGES $V_{CC} = 5V \pm 10\%; T_A = 0°C$ to $+70°C$
Plastic DIP	N74F--N
Plastic SO[1]	N74F--D

NOTE:
1. SO package is surface-mounted micro-miniature DIP.

FAST™ Family Characteristics

ABSOLUTE MAXIMUM RATINGS

(Operation beyond the limits set forth in this table may impair the useful life of the device. Unless otherwise noted these limits are over the operating free-air temperature range.)

SYMBOL	PARAMETER		74F	UNIT
V_{CC}	Supply voltage		– 0.5 to +7.0	V
V_{IN}	Input voltage		– 0.5 to +7.0	V
I_{IN}	Input current		– 30 to +5	mA
V_{OUT}	Voltage applied to output in HIGH output state		– 0.5 to V_{CC}	V
I_{OUT}	Current applied to output in LOW output state	Standard outputs	40	mA
		3-State outputs	48	mA
		Buffer outputs	128	mA
T_A	Operating free-air temperature range		0 to 70	°C

NOTE:

1. For 3-State outputs, $V_{OUT} = -0.5V$ to $5.5V$ with $V_{CC} = 0V$.

RECOMMENDED OPERATING CONDITIONS

SYMBOL	PARAMETER		74F			UNIT
			Min	Typ	Max	
V_{CC}	Supply voltage		4.5	5.0	5.5	V
V_{IH}	HIGH-level input voltage		2.0			V
V_{IL}	LOW-level input voltage				0.8	V
I_{IK}	Input clamp current				– 18	mA
V_{OH}	HIGH-level output voltage	Open collector			4.5	V
I_{OH}	HIGH-level output current	Standard outputs			– 1	mA
		3-State outputs			– 3	mA
		Buffer outputs			– 15	mA
I_{OL}	LOW-level output current	Standard outputs			20	mA
		3-State outputs			24	mA
		Buffer outputs			64	mA
T_A	Operating free-air temperature range		0		70	°C

FAST™ Family Characteristics

DC ELECTRICAL CHARACTERISTICS

SYMBOL	PARAMETER			LIMITS²			UNITS	V_{CC}⁴	CONDITIONS²
				Min	Typ³	Max			
V_{IH}	Input HIGH Voltage			2.0			V		Recognized as a HIGH Signal over Recommended V_{CC} and T_A Range
V_{IL}	Input LOW Voltage					0.8	V		Recognized as a LOW Signal over Recommended V_{CC} and T_A Range
V_{IK} (V_{DC})	Input Clamp Diode Voltage					−1.2	V	Min	I_{IN} = −18mA
V_{OH}	Output HIGH Voltage	Std⁵	±10%	2.5	3.4		V	Min	I_{OH} = −1mA
			±5%	2.7	3.4		V	Min	I_{OH} = −1mA
		3-State	±10%	2.4	3.3		V	Min	I_{OH} = −3mA
			±5%	2.7	3.3		V	Min	I_{OH} = −3mA
		Buffers	±10%	2.0	3.1		V	Min	I_{OH} = −15mA
			±5%	2.0	3.1		V	Min	I_{OH} = −15mA
V_{OL}	Output LOW Voltage	Std⁵	±10%		0.35	0.5	V	Min	I_{OL} = 20mA
			±5%		0.35	0.5	V	Min	I_{OL} = 20mA
		3-State	±10%		0.35	0.5	V	Min	I_{OL} = 24mA
			±5%		0.35	0.5	V	Min	I_{OL} = 24mA
		Buffers	±10%		0.35	0.5	V	Min	I_{OL} = 48mA
			±5%		0.40	0.55	V	Min	I_{OL} = 84mA
I_I	Input HIGH Current Breakdown Test	Diode inputs⁶				100	µA	Max	V_{IN} = 7.0V
		NPN inputs				100	µA	0.0V	V_{IN} = 7.0V
		Transceiver I/O pins				1.0	mA	5.5V	V_{IN} = 5.5V
I_{IH}	Input HIGH Current					n(28)	µA	Max	V_{IH} = 2.7V (20µA × n HIGH U.L.)
I_{IL}	Input LOW Current	Diode inputs⁶				n(−600)	µA	Max	V_{IL} = 0.5V (−600µA × n LOW U.L.)
		NPN inputs				n(−20)	µA	Max	V_{IL} = 0.5V (−20µA × n LOW U.L.)
I_{IH} + I_{OZH}	Input HIGH Current (I/O pins)					n(20) +50	µA	Max	V_{IH} = 2.7V (20µA × n HIGH U.L.)
I_{IL} + I_{OZL}	Input LOW Current (I/O pins)	Diode inputs⁶				n(−0.6)	µA	Max	V_{IL} = 0.5V (−0.5µA × n LOW U.L.)
		NPN inputs				n(−20) −50	µA	Max	V_{IL} = 0.5V (−20µA × n LOW U.L.)
I_{OZH}	3-State OFF Current HIGH					50	µA	Max	V_{OUT} = 2.7V
I_{OZL}	3-State OFF Current LOW					−50	µA	Max	V_{OUT} = 0.5V
I_{OH}	Open-Collector Output Leakage					250	µA	Min	V_{OH} = 4.5V
I_{OS}⁷	Output Short-Circuit Current	Std.⁵ 3-State		−80		−150	µA	Max	V_{OUT} = 0V
		Buffer Driver		−100		−225	µA	Max	V_{OUT} = 0V

NOTE:

1. Unless otherwise noted, conditions and limits apply throughout the temperature range for which the particular device type is rated. The ground pin is the reference level for all applied and resultant voltages.
2. Unless otherwise stated on individual data sheets.
3. Typical characteristics refer to T_A = +25°C and V_{CC} = +5.0V.
4. Min and Max refer to the values listed in the data sheet table of recommended operating conditions.
5. Standard refers to the totem-pole pull-up circuitry commonly used for the particular family, as distinguished from buffers, line drivers or 3-state outputs.
6. On certain part types, Signetics uses a high impedance NPN base input structure to enhance device performance. Parts which have this structure are indicated in the FAST Data Manual. NPN inputs are tested with V_{CC} = 0V and 7.0V at the input. It is necessary to turn V_{CC} off for the NPN input test to measure leakage. Otherwise, the current source is on and the leakage is undetectable.
7. For testing I_{OS}, the use of high-speed test apparatus and/or sample-and-hold techniques are preferable in order to minimize internal heating and more accurately reflect operation values. Otherwise, prolonged shorting of a HIGH output may raise the chip temperature well above normal and thereby cause invalid readings in other parameter tests. In any sequence of parameter tests, I_{OS} test should be performed last.

Signetics

Logic Products

FAST 74F160A, 74F161A, 74F162A, 74F163A
Counters

'F160A, 'F162A BCD Decade Counter
'F161A, 'F163A 4-Bit Binary Counter
Preliminary Specification

FEATURES

- **Synchronous counting and loading**
- **Two Count Enable inputs for n-bit cascading**
- **Positive edge-triggered clock**
- **Asynchronous reset ('F160A, 'F161A)**
- **Synchronous reset ('F162A, 'F163A)**
- **High-speed synchronous expansion**
- **Typical count rate of 120MHz**

DESCRIPTION

Synchronous presettable decade ('F160A, 'F162A) and 4-bit ('F161A, 'F163A) counters feature an internal carry look-ahead and can be used for high-speed counting. Synchronous operation is provided by having all flip-flops clocked simultaneously on the positive-going edge of the clock. The Clock input is buffered.

TYPE	TYPICAL f_{MAX}	TYPICAL SUPPLY CURRENT (TOTAL)
74F160A	120MHz	40mA
74F161A	120MHz	40mA
74F162A	120MHz	40mA
74F163A	120MHz	40mA

ORDERING CODE

PACKAGES	COMMERCIAL RANGE $V_{CC} = 5V \pm 10\%; T_A = 0°C$ to $+70°C$
Plastic DIP	N74F160AN, N74F161AN N74F162AN, N74F163AN
Plastic SO-16	N74F160AD, N74F161AD N74F162AD, N74F163AD

NOTES:
1. SO package is surface-mounted micro-miniature DIP.
2. For information regarding devices processed to Military Specifications, see the Signetics Military Products Data Manual.

INPUT AND OUTPUT LOADING AND FAN-OUT TABLE

PINS	DESCRIPTION	74F(U.L.) HIGH/LOW	LOAD VALUE HIGH/LOW
CEP	Count enable parallel input	1.0/1.0	20μA/0.6mA
CET	Count enable trickle input	1.0/2.0	20μA/1.2mA
CP	Clock pulse input (active rising edge)	1.0/1.0	20μA/0.6mA
$\overline{MR}$	Asynchronous master reset input (active LOW)	1.0/1.0	20μA/0.6mA
$\overline{SR}$	Synchronous reset input (active LOW)	1.0/2.0	20μA/1.2mA
$D_0 - D_3$	Parallel data inputs	1.0/1.0	20μA/0.6mA
$\overline{PE}$	Parallel enable input (active LOW)	1.0/2.0	20μA/1.2mA
$Q_0 - Q_3$	Flip-flop outputs	50/33	1.0mA/20mA
TC	Terminal count output	50/33	1.0mA/20mA

NOTE:
One (1.0) FAST Unit Load is defined as: 20μA in the HIGH state and 0.6mA in the LOW state.

PIN CONFIGURATION

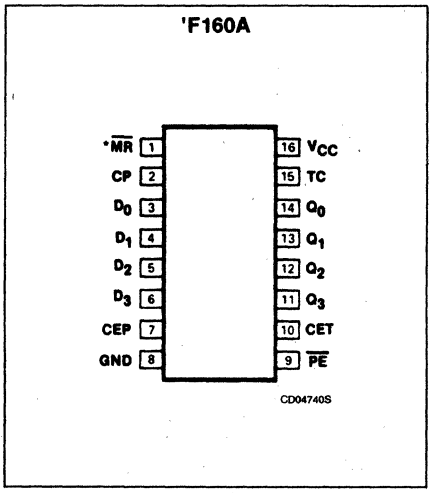
'F160A
*MR 1
CP 2
D0 3
D1 4
D2 5
D3 6
CEP 7
GND 8
16 VCC
15 TC
14 Q0
13 Q1
12 Q2
11 Q3
10 CET
9 PE
CD04740S

LOGIC SYMBOL

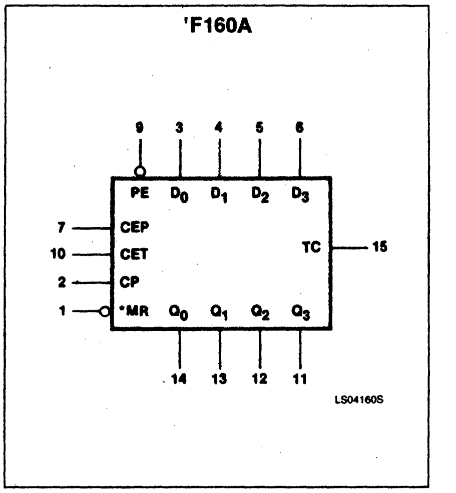
'F160A
9
3
4
5
6
PE
D0
D1
D2
D3
7
CEP
10
CET
2
CP
1
*MR
TC
15
Q0
Q1
Q2
Q3
14
13
12
11
LS04160S

LOGIC SYMBOL

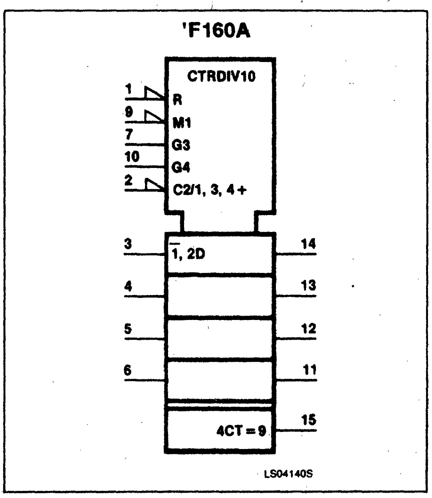
'F160A
CTRDIV10
1
R
9
M1
7
G3
10
G4
2
C2/1, 3, 4+
3
1, 2D
14
4
13
5
12
6
11
15
4CT=9
LS04140S

Counters

FAST 74F160A, 74F161A, 74F162A, 74F163A

PIN CONFIGURATION

'F161A

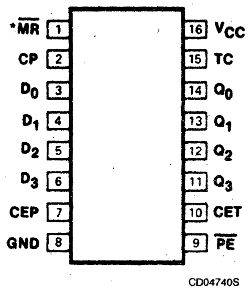
*MR 1
CP 2
D0 3
D1 4
D2 5
D3 6
CEP 7
GND 8
16 VCC
15 TC
14 Q0
13 Q1
12 Q2
11 Q3
10 CET
9 PE
CD04740S

LOGIC SYMBOL

'F161A

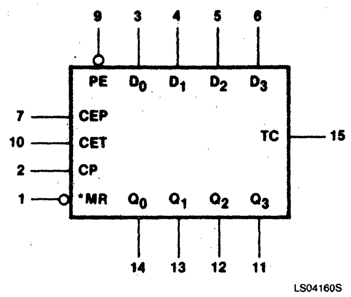
9 3 4 5 6
PE D0 D1 D2 D3
7 CEP
10 CET
2 CP
1 *MR
TC 15
Q0 Q1 Q2 Q3
14 13 12 11
LS04160S

LOGIC SYMBOL

'F161A

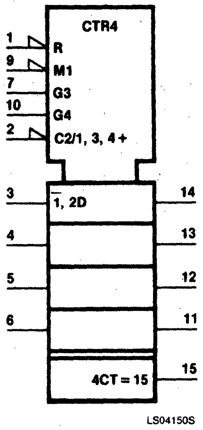
CTR4
1 R
9 M1
7 G3
10 G4
2 C2/1, 3, 4+
3 1, 2D 14
4 13
5 12
6 11
4CT=15 15
LS04150S

PIN CONFIGURATION

'F162A

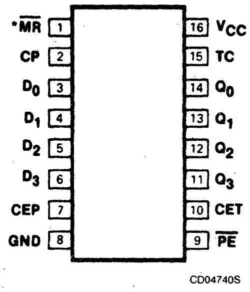
*MR 1
CP 2
D0 3
D1 4
D2 5
D3 6
CEP 7
GND 8
16 VCC
15 TC
14 Q0
13 Q1
12 Q2
11 Q3
10 CET
9 PE
CD04740S

LOGIC SYMBOL

'F162A

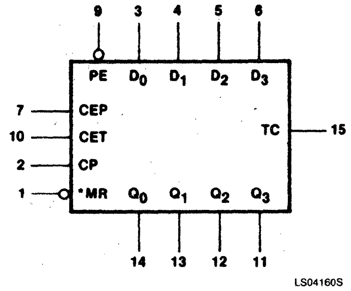
9 3 4 5 6
PE D0 D1 D2 D3
7 CEP
10 CET
2 CP
1 *MR
TC 15
Q0 Q1 Q2 Q3
14 13 12 11
LS04160S

LOGIC SYMBOL

'F162A

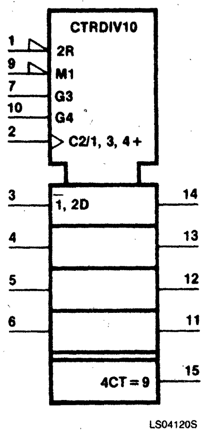
CTRDIV10
1 2R
9 M1
7 G3
10 G4
2 C2/1, 3, 4+
3 1, 2D 14
4 13
5 12
6 11
4CT=9 15
LS04120S

PIN CONFIGURATION

'F163A

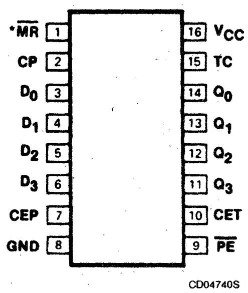
*MR 1
CP 2
D0 3
D1 4
D2 5
D3 6
CEP 7
GND 8
16 VCC
15 TC
14 Q0
13 Q1
12 Q2
11 Q3
10 CET
9 PE
CD04740S

LOGIC SYMBOL

'F163A

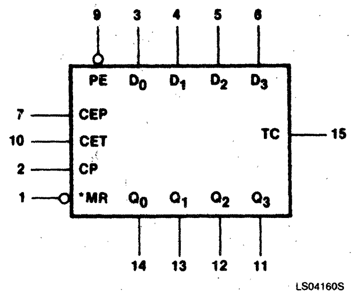
9 3 4 5 6
PE D0 D1 D2 D3
7 CEP
10 CET
2 CP
1 *MR
TC 15
Q0 Q1 Q2 Q3
14 13 12 11
LS04160S

LOGIC SYMBOL

'F163A

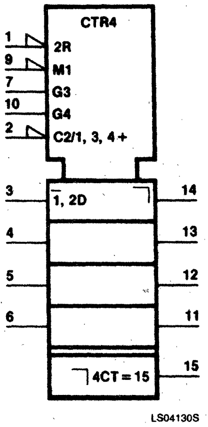
CTR4
1 2R
9 M1
7 G3
10 G4
2 C2/1, 3, 4+
3 1, 2D 14
4 13
5 12
6 11
4CT=15 15
LS04130S

FOR COMPLETE DATA SHEET, Call 800-443-0100, Ext. 518

Signetics

FAST 74F269
8-Bit Counter

8-Bit Bidirectional Binary Counter
Product Specification

Logic Products

FEATURES

- **Synchronous counting and loading**
- **Built-in lookahead carry capability**
- **Count frequency 115MHz typ**
- **Supply current 95mA typ**

DESCRIPTION

The 'F269 is a fully synchronous 8-stage up/down counter featuring a preset capability for programmable operation, carry lookahead for easy cascading and a U/$\overline{D}$ input to control the direction of counting. All state changes, whether in counting or parallel loading, are initiated by the rising edge of the clock.

TYPE	TYPICAL f_{MAX}	TYPICAL SUPPLY CURRENT (TOTAL)
74F269	115MHz	95mA

ORDERING CODE

PACKAGES	COMMERCIAL RANGE $V_{CC} = 5V \pm 10\%$; $T_A = 0°C$ to $+70°C$
Plastic DIP	N74F269N
Plastic SOL-24	N74F269D

NOTES:
1. SO package is surface-mounted micro-miniature DIP.
2. For information regarding devices processed to Military Specifications, see the Signetics Military Products Data Manual.

INPUT AND OUTPUT LOADING AND FAN-OUT TABLE

PINS	DESCRIPTION	74F(U.L.) HIGH/LOW	LOAD VALUE HIGH/LOW
$P_0 - P_7$	Parallel data inputs	1.0/1.0	20μA/0.6mA
$\overline{PE}$	Parallel enable input (active LOW)	1.0/1.0	20μA/0.6mA
U/$\overline{D}$	Up-Down count control input	1.0/1.0	20μA/0.6mA
$\overline{CEP}$	Count enable parallel input (active LOW)	1.0/1.0	20μA/0.6mA
$\overline{CET}$	Count enable trickle input (active LOW)	1.0/1.0	20μA/0.6mA
CP	Clock input	1.0/1.0	20μA/0.6mA
$\overline{TC}$	Terminal count output (active LOW)	1.0/1.0	20μA/0.6mA
$Q_0 - Q_7$	Flip-flop outputs	50/33	1mA/20mA

NOTE:
One (1.0) FAST Unit Load is defined as: 20μA in the HIGH state and 0.6mA in the LOW state.

PIN CONFIGURATION

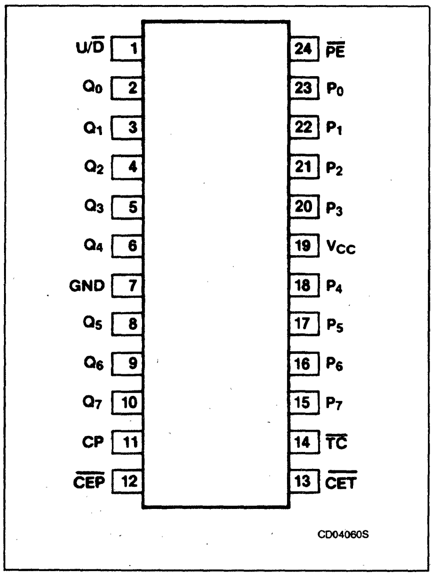
U/D̄ 1
Q0 2
Q1 3
Q2 4
Q3 5
Q4 6
GND 7
Q5 8
Q6 9
Q7 10
CP 11
CEP 12
24 PE
23 P0
22 P1
21 P2
20 P3
19 VCC
18 P4
17 P5
16 P6
15 P7
14 TC
13 CET
CD04060S

LOGIC SYMBOL

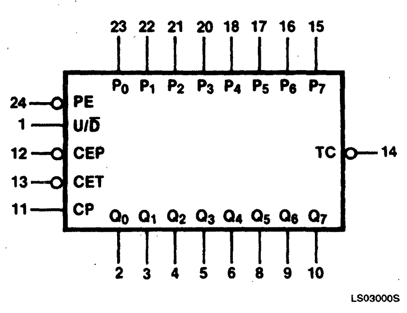
23 22 21 20 18 17 16 15
P0 P1 P2 P3 P4 P5 P6 P7
24 PE
1 U/D̄
12 CEP
13 CET
11 CP
TC 14
Q0 Q1 Q2 Q3 Q4 Q5 Q6 Q7
2 3 4 5 6 8 9 10
LS03000S

V_{CC} = Pin 19
GND = Pin 7

LOGIC SYMBOL (IEEE/IEC)

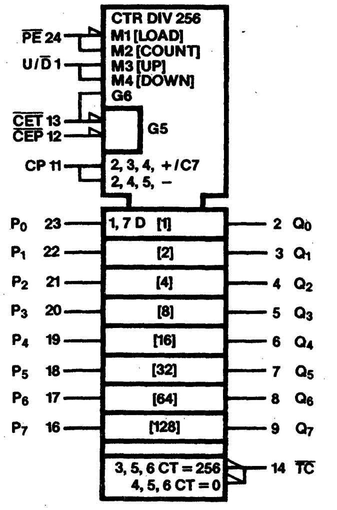
CTR DIV 256
M1 [LOAD]
M2 [COUNT]
M3 [UP]
M4 [DOWN]
G6
PE 24
U/D̄ 1
CET 13
CEP 12
G5
CP 11
2, 3, 4, +/C7
2, 4, 5, −
P0 23
P1 22
P2 21
P3 20
P4 19
P5 18
P6 17
P7 16
1, 7 D [1]
[2]
[4]
[8]
[16]
[32]
[64]
[128]
2 Q0
3 Q1
4 Q2
5 Q3
6 Q4
7 Q5
8 Q6
9 Q7
3, 5, 6 CT = 256
4, 5, 6 CT = 0
14 TC
LS03010S

Signetics

Logic Products

FAST 74F455, 74F456
Buffers/Drivers

'F455 Octal Buffer/Line Driver with Parity, Inverting (3-State)
'F456 Octal Buffer/Line Driver with Parity, Inverting (3-State)
Product Specification

FEATURES

- **High impedance NPN base inputs for reduced loading (20μA in HIGH and LOW states)**
- **'F455 combines 'F240 and 'F280A functions in one package**
- **'F456 combines 'F241 and 'F280A functions in one package**
- **'F455A and 'F456A are center pin versions of the 'F655A and 'F656A respectively**
- **'F455 Inverting**
  'F456 Non-inverting
- **3-State outputs sink 64mA and source 15mA**
- **24-pin plastic slim DIP (300 mil) package**
- **Inputs on one side and outputs on the other side simply PC board layout**

DESCRIPTION

The 'F455 and 'F456 are octal buffers and line drivers with parity generation/checking designed to be employed as memory address drivers, clock drivers and bus-oriented transmitters/receivers. These parts include parity generator/checker to improve PC board density.

TYPE	TYPICAL PROPAGATION DELAY	TYPICAL SUPPLY CURRENT (TOTAL)
74F455	3.5ns	70mA
74F456	4.5ns	70mA

ORDERING CODE

PACKAGES	COMMERCIAL RANGE $V_{CC} = 5V \pm 10\%$; $T_A = 0°C$ to $+70°C$
Plastic DIP	N74F455N, N74F456N
Plastic SOL-24	N74F455D, N74F456D

NOTE:
1. SO package is surface-mounted micro-miniature DIP.

INPUT AND OUTPUT LOADING AND FAN-OUT TABLE

PINS	DESCRIPTION	74F(U.L.) HIGH/LOW	LOAD VALUE HIGH/LOW
I_n	Data inputs	1.0/0.033	20μA/20μA
PI	Parity input	1.0/0.033	20μA/20μA
$\overline{OE}_1$, $\overline{OE}_2$	3-State output enable inputs (active LOW)	1.0/0.033	20μA/20μA
$\overline{Y}_n$	Data outputs ('F455)	750/106.7	15mA/64mA
Y_n	Data outputs ('F456)	750/106.7	15mA/64mA
Σ_E, Σ_O	Parity outputs	750/106.7	15mA/64mA

NOTE:
One (1.0) FAST Unit Load is defined as: 20μA in the HIGH state and 0.6mA in the LOW state.

PIN CONFIGRUATION

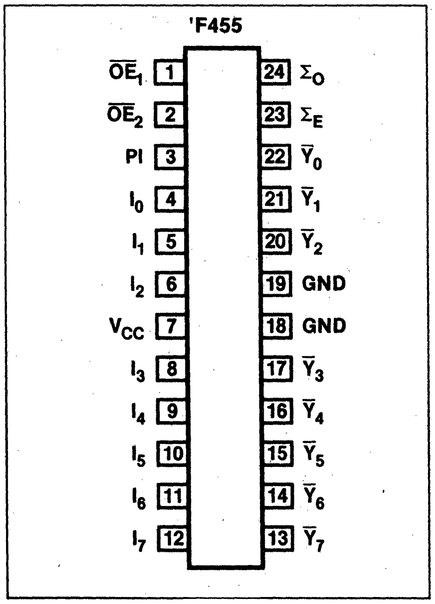
'F455
$\overline{OE}_1$ 1
$\overline{OE}_2$ 2
PI 3
I_0 4
I_1 5
I_2 6
V_{CC} 7
I_3 8
I_4 9
I_5 10
I_6 11
I_7 12
24 Σ_O
23 Σ_E
22 $\overline{Y}_0$
21 $\overline{Y}_1$
20 $\overline{Y}_2$
19 GND
18 GND
17 $\overline{Y}_3$
16 $\overline{Y}_4$
15 $\overline{Y}_5$
14 $\overline{Y}_6$
13 $\overline{Y}_7$

LOGIC SYMBOL

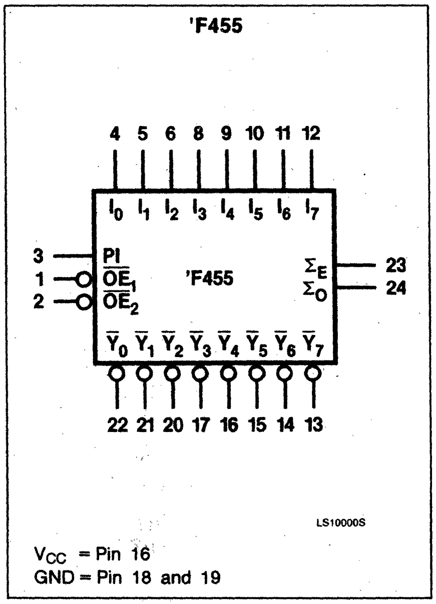
'F455
4 5 6 8 9 10 11 12
I_0 I_1 I_2 I_3 I_4 I_5 I_6 I_7
3 PI
1 $\overline{OE}_1$
2 $\overline{OE}_2$
'F455
Σ_E 23
Σ_O 24
$\overline{Y}_0$ $\overline{Y}_1$ $\overline{Y}_2$ $\overline{Y}_3$ $\overline{Y}_4$ $\overline{Y}_5$ $\overline{Y}_6$ $\overline{Y}_7$
22 21 20 17 16 15 14 13
LS10000S
V_{CC} = Pin 16
GND = Pin 18 and 19

LOGIC SYMBOL (IEEE/IEC)

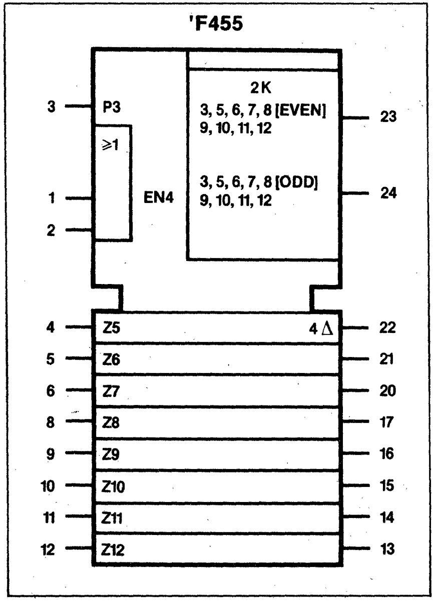
'F455
3 P3
≥1
1
2
EN4
2K
3, 5, 6, 7, 8 [EVEN] 9, 10, 11, 12
23
3, 5, 6, 7, 8 [ODD] 9, 10, 11, 12
24
4 Z5 4∆ 22
5 Z6 21
6 Z7 20
8 Z8 17
9 Z9 16
10 Z10 15
11 Z11 14
12 Z12 13

August 26,1985

853-0371 80218

Buffers/Drivers

FAST 74F455, 74F456

PIN CONFIGURATION

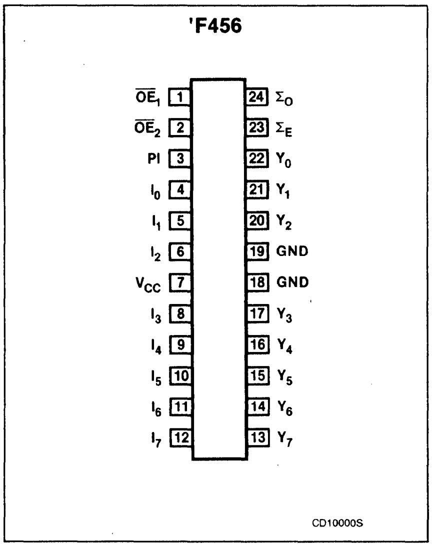
'F456
OE1 1
OE2 2
PI 3
I0 4
I1 5
I2 6
VCC 7
I3 8
I4 9
I5 10
I6 11
I7 12
24 ΣO
23 ΣE
22 Y0
21 Y1
20 Y2
19 GND
18 GND
17 Y3
16 Y4
15 Y5
14 Y6
13 Y7
CD10000S

LOGIC SYMBOL

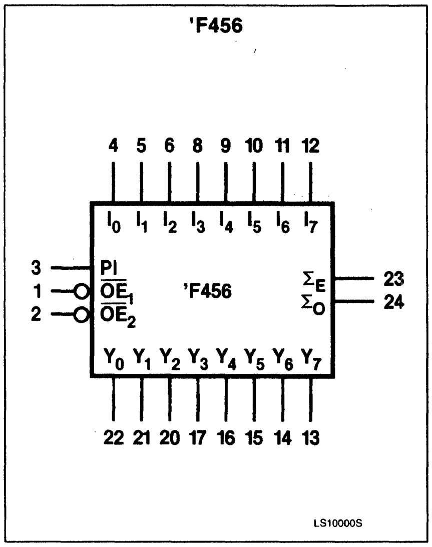
'F456
4 5 6 8 9 10 11 12
I0 I1 I2 I3 I4 I5 I6 I7
3 PI
1 OE1
2 OE2
'F456
ΣE 23
ΣO 24
Y0 Y1 Y2 Y3 Y4 Y5 Y6 Y7
22 21 20 17 16 15 14 13
LS10000S

LOGIC SYMBOL (IEEE/IEC)

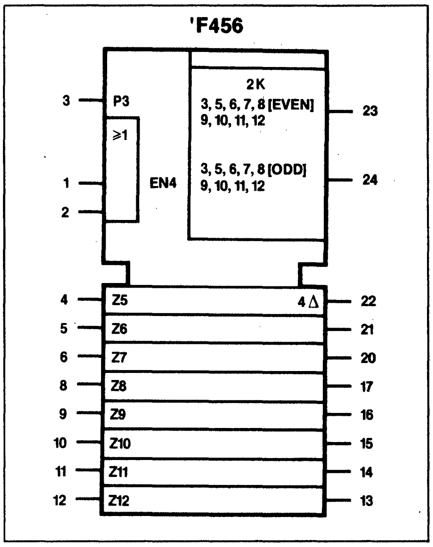
'F456
3 P3
≥1
1
2
EN4
2K
3, 5, 6, 7, 8 [EVEN] 9, 10, 11, 12
23
3, 5, 6, 7, 8 [ODD] 9, 10, 11, 12
24
4 Z5 4Δ 22
5 Z6 21
6 Z7 20
8 Z8 17
9 Z9 16
10 Z10 15
11 Z11 14
12 Z12 13

FUNCTION TABLES

INPUTS			DATA OUTPUTS	
$\overline{OE}_1$	$\overline{OE}_2$	I_n	'F455	'F456
L	L	L	H	L
L	L	H	L	H
H	X	X	(Z)	(Z)
X	H	X	(Z)	(Z)

H = HIGH voltage level
L = LOW voltage level
X = Don't care
(Z) = HIGH impedance level

INPUTS	PARITY OUTPUTS	
Number of inputs HIGH (PI, $I_0 - I_7$)	Σ_E	Σ_O
Even – 0, 2, 4, 6, 8	H	L
Odd – 1, 3, 5, 7, 9	L	H
Any $\overline{OE}$ = HIGH	(Z)	(Z)

August 26,1985

FAST 74F579
Counter

8-Bit Bidirectional Binary Counter (3-State)
Product Specification

Logic Products

FEATURES

- **Multiplexed 3-state I/O ports for bus-oriented applications**
- **Built-in lookahead carry capability**
- **Count frequency 115MHz typ**
- **Supply current 100mA typ**
- **Fully synchronous operation**
- **$U/\overline{D}$ to control direction or counting**
- **Separate pins for Master**
- **Reset and Synchronous Reset**
- **Center power pins to Reduce effects of package inductance**
- **See 'F269 for 24-pin separate I/O port version**
- **See 'F779 for 16 pin version**

DESCRIPTION

The 'F579 is a fully synchronous 8-stage up/down counter with multiplexed 3-state I/O ports for bus-oriented applications. It features a preset capability for programmable operation, carry lookahead for easy cascading and a $U/\overline{D}$ input to control the direction of counting. All state changes, whether in counting or parallel loading, are initiated by the rising edge of the clock.

TYPE	TYPICAL f_{MAX}	TYPICAL SUPPLY CURRENT (TOTAL)
74F579	115MHz	100mA

ORDERING CODE

PACKAGES	COMMERCIAL RANGE $V_{CC} = 5V \pm 10\%$; $T_A = 0°C$ to $+ 70°C$
Plastic DIP	N74F579N
Plastic SOL-20	N74F579D

NOTES:
1. SO package is surface-mounted micro-miniature DIP.
2. For information regarding devices processed to Military Specifications, see the Signetics Military Products Data Manual.

PIN CONFIGURATION

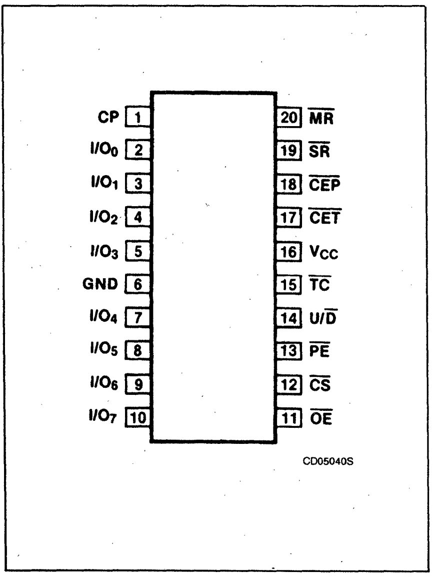
CP 1
I/O_0 2
I/O_1 3
I/O_2 4
I/O_3 5
GND 6
I/O_4 7
I/O_5 8
I/O_6 9
I/O_7 10
20 $\overline{MR}$
19 $\overline{SR}$
18 $\overline{CEP}$
17 $\overline{CET}$
16 V_{CC}
15 $\overline{TC}$
14 $U/\overline{D}$
13 $\overline{PE}$
12 $\overline{CS}$
11 $\overline{OE}$
CD05040S

LOGIC SYMBOL

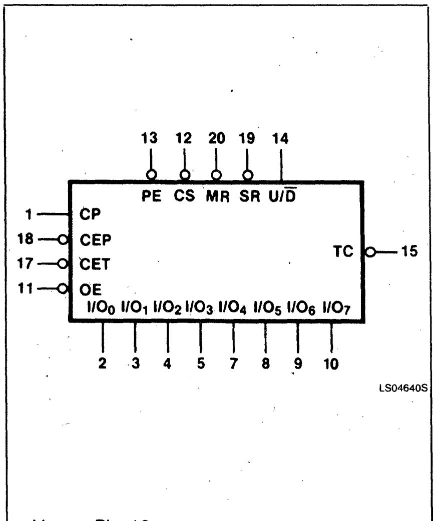
13 12 20 19 14
PE CS MR SR $U/\overline{D}$
1 CP
18 CEP
17 CET
11 OE
TC 15
I/O_0 I/O_1 I/O_2 I/O_3 I/O_4 I/O_5 I/O_6 I/O_7
2 3 4 5 7 8 9 10
LS04640S

V_{CC} = Pin 16
GND = Pin 6

LOGIC SYMBOL (IEEE/IEC)

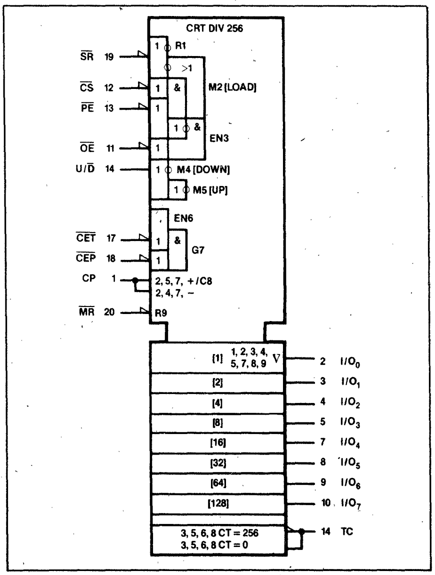
CRT DIV 256
$\overline{SR}$ 19
$\overline{CS}$ 12
$\overline{PE}$ 13
$\overline{OE}$ 11
$U/\overline{D}$ 14
$\overline{CET}$ 17
$\overline{CEP}$ 18
CP 1
$\overline{MR}$ 20
R1
>1
&
M2 [LOAD]
EN3
M4 [DOWN]
M5 [UP]
EN6
G7
2, 5, 7, +/C8
2, 4, 7, −
R9
[1] 1, 2, 3, 4, 5, 7, 8, 9 ∇
[2]
[4]
[8]
[16]
[32]
[64]
[128]
3, 5, 6, 8 CT = 256
3, 5, 6, 8 CT = 0
2 I/O_0
3 I/O_1
4 I/O_2
5 I/O_3
7 I/O_4
8 I/O_5
9 I/O_6
10 I/O_7
14 TC

August 26, 1985

853-0377 80218

Counter

FAST 74F579

INPUT AND OUTPUT LOADING AND FAN-OUT TABLE

PINS	DESCRIPTION	74F(U.L.) HIGH/LOW	LOAD VALUE HIGH/LOW
$I/O_0 - I/O_7$	Data inputs	1.0/1.0	20μA/0.6mA
	Data outputs	150/40	3mA/24mA
$\overline{PE}$	Parallel enable input (active LOW)	1.0/1.0	20μA/0.6mA
$U/\overline{D}$	Up-down count control input	1.0/1.0	20μA/0.6mA
$\overline{MR}$	Master Reset input (active LOW)	1.0/1.0	20μA/0.6mA
$\overline{SR}$	Synchronous reset input (active LOW)	1.0/1.0	20μA/0.6mA
$\overline{CEP}$	Count enable parallel input (active LOW)	1.0/1.0	20μA/0.6mA
$\overline{CET}$	Count enable trickle input (active LOW)	1.0/1.0	20μA/0.6mA
$\overline{CS}$	Chip select input (active LOW)	1.0/1.0	20μA/0.6mA
$\overline{OE}$	Output enable input (active LOW)	1.0/1.0	20μA/0.6mA
CP	Clock pulse input (active rising edge)	1.0/1.0	20μA/0.6mA
$\overline{TC}$	Terminal count output (active LOW)	150/33	3mA/20mA

NOTE:
One (1.0) FAST Unit Load is defined as: 20μA in the HIGH state and 0.6mA in the LOW state.

FUNCTION TABLE

$\overline{MR}$	$\overline{SR}$	$\overline{CS}$	$\overline{PE}$	$\overline{CEP}$	$\overline{CET}$	$U/\overline{D}$	$\overline{OE}$	CP	FUNCTION
X	X	H	X	X	X	X	X	X	I/Oa to I/Oh in High-Z ($\overline{PE}$ disabled)
X	X	L	H	X	X	X	H	X	I/Oa to I/Oh in High-Z
X	X	L	H	X	X	X	L	X	Flip-flop outputs appear on I/O lines
L	X	X	X	X	X	X	X	X	Asynchronous reset for all flip-flops
H	L	X	X	X	X	X	X	↑	Synchronous reset for all flip-flops
H	H	L	L	X	X	X	X	↑	Parallel load all flip-flops
H	H	(not LL)		H	X	X	X	↑	Hold
H	H	(not LL)		X	H	X	X	↑	Hold ($\overline{TC}$ held high)
H	H	(not LL)		L	L	H	X	↑	Count up
H	H	(not LL)		L	L	L	X	↑	Count down

H = HIGH voltage level
L = LOW voltage level
X = Don't Care
↑ = LOW-to-HIGH clock transition not LL means $\overline{CS}$ and $\overline{PE}$ should never both be LOW voltage level at the same time.

Signetics

Logic Products

FAST 74F620, F623
Transcievers

Octal Bus Transceiver
('F620 — Inverting 3-State)
('F623 — Non-Inverting 3-State)
Product Specification

FEATURES

- High impedance NPN base inputs for reduced loading (20μA in HIGH and LOW states)
- Ideal for applications which require high output drive and minimal bus loading
- Octal bidirectional bus interface
- 3-State buffer outputs sink 64mA and source 15mA
  - 'F620, inverting
  - 'F623, non-inverting

DESCRIPTION

The 'F623 is an octal transceiver featuring non-inverting 3-State bus-compatible outputs in both send and receive directions. The outputs are capable of sinking 64mA and sourcing up to 15mA, providing very good capacitive drive characteristics. The 'F620 is an inverting version of the 'F623.

These octal bus transceivers are designed for asynchronous two-way communication between data buses. The control function implementation allows for maximum flexibility in timing.

TYPE	TYPICAL PROPAGATION DELAY	TYPICAL SUPPLY CURRENT (TOTAL)
74F620	3.5ns	75mA
74F623	4.5ns	105mA

ORDERING CODE

PACKAGES	COMMERCIAL RANGE $V_{CC} = 5V \pm 10\%$; $T_A = 0°C$ to $+70°C$
Plastic DIP	N74F620N, N74F623N
Plastic SOL-20	N74F620D

NOTES:
1. SO package is surface-mounted micro-miniature DIP.
2. For information regarding devices processed to Military Specifications, see the Signetics Military Products Data Manual.

INPUT AND OUTPUT LOADING AND FAN-OUT TABLE

PINS	DESCRIPTION	74F(U.L.) HIGH/LOW	LOAD VALUE HIGH/LOW
$A_1 - A_8$, $B_1 - B_8$	Data inputs	3.5/0.116	70μA/70μA
$\overline{G}BA$, GAB	3-State output enable inputs (active LOW)	1.0/0.033	20μA/20μA
$A_1 - A_8$	Data outputs	150/40	3mA/24mA
$B_1 - B_8$	Data ouputs	750/106.7	15mA/64mA

NOTE:
One (1.0) FAST unit load is defined as: 20μA in the HIGH state and 0.6mA in the LOW state.

PIN CONFIGURATION

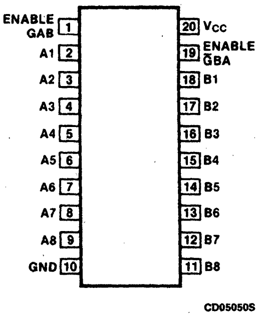
ENABLE GAB 1
A1 2
A2 3
A3 4
A4 5
A5 6
A6 7
A7 8
A8 9
GND 10
20 Vcc
19 ENABLE GBA
18 B1
17 B2
16 B3
15 B4
14 B5
13 B6
12 B7
11 B8
CD05050S

LS04650S

LOGIC SYMBOL

'F620

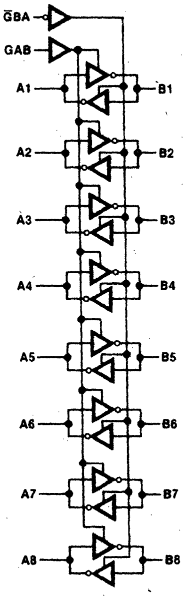
GBA
GAB
A1
A2
A3
A4
A5
A6
A7
A8
B1
B2
B3
B4
B5
B6
B7
B8

LOGIC SYMBOL (IEEE)

'F620

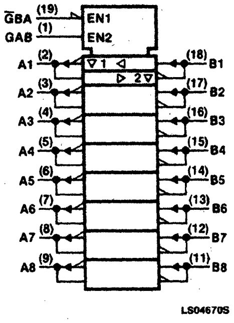
GBA (19)
GAB (1)
EN1
EN2
▽1 ◁
▷ 2▽
A1 (2)
A2 (3)
A3 (4)
A4 (5)
A5 (6)
A6 (7)
A7 (8)
A8 (9)
(18) B1
(17) B2
(16) B3
(15) B4
(14) B5
(13) B6
(12) B7
(11) B8
LS04670S

August 26, 1985

853-0379 80218

Transcievers

FAST 74F620, F623

PIN CONFIGURATION

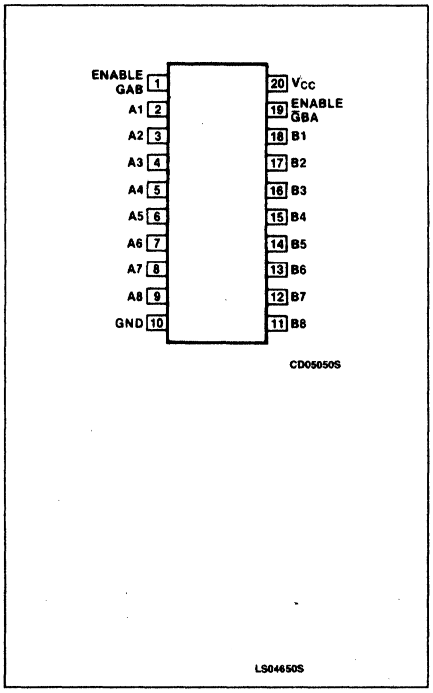
ENABLE GAB 1
A1 2
A2 3
A3 4
A4 5
A5 6
A6 7
A7 8
A8 9
GND 10
20 V_{CC}
19 ENABLE $\overline{\text{G}}$BA
18 B1
17 B2
16 B3
15 B4
14 B5
13 B6
12 B7
11 B8
CD05050S
LS04650S

LOGIC SYMBOL

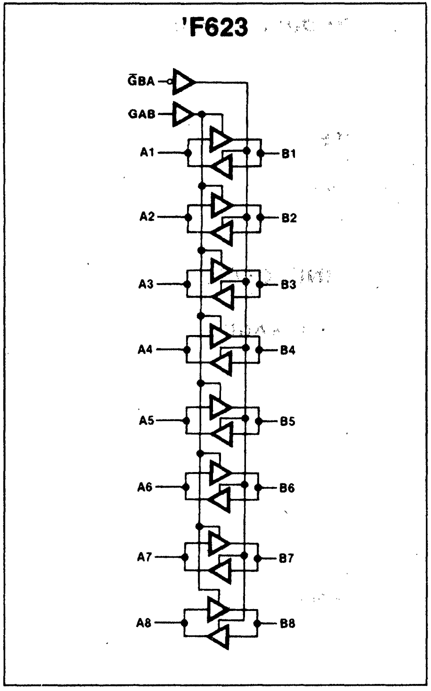
'F623
$\overline{\text{G}}$BA
GAB
A1
A2
A3
A4
A5
A6
A7
A8
B1
B2
B3
B4
B5
B6
B7
B8

LOGIC SYMBOL (IEEE)

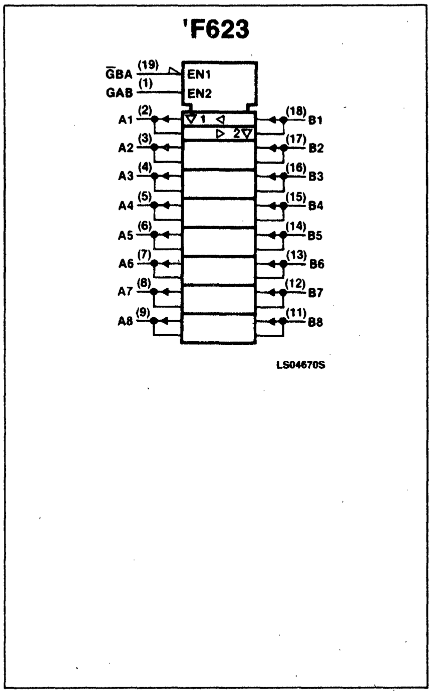
'F623
$\overline{\text{G}}$BA (19)
GAB (1)
EN1
EN2
∇1 ◁
▷ 2∇
A1 (2)
A2 (3)
A3 (4)
A4 (5)
A5 (6)
A6 (7)
A7 (8)
A8 (9)
(18) B1
(17) B2
(16) B3
(15) B4
(14) B5
(13) B6
(12) B7
(11) B8
LS04670S

These devices allow data transmisstion from the A bus to the B bus or from the B bus to the A bus, depending upon the logic levels at the Enable inputs ($\overline{\text{G}}$BA and GAB). The Enable inputs can be used to disable the device so that the buses are effectively isolated.

The dual-enable configuration gives the 'F620 and 'F623 the capability to store data by simultaneous enabling of $\overline{\text{G}}$BA and GAB. Each output reinforces its input in this transceiver configuration. Thus, when both control inputs are enabled and all other data sources to the two sets of the bus lines are at high impedance, both sets of bus lines (16 in all) will remain at their last states.

FUNCTION TABLE

ENABLE	INPUTS	OPERATION	
$\overline{\text{G}}$BA	GAB	'F620	'F623
L	L	$\overline{\text{B}}$ data to A bus	B data to A bus
H	H	$\overline{\text{A}}$ data to B bus	A data to B bus
H	L	(Z)	(Z)
L	H	$\overline{\text{B}}$ data to A bus, $\overline{\text{A}}$ data to B bus	B data to A bus, A data to B bus

H = HIGH voltage level
L = LOW voltage level
(Z) = HIGH impedance (off) state

ABSOLUTE MAXIMUM RATINGS

(Operation beyond the limits set forth in this table may impair the useful life of the device. Unless otherwise noted these limits are over the operating free-air temperature range.)

PARAMETER			74F	UNIT
V_{CC}	Supply voltage		-0.5 to +7.0	V
V_{IN}	Input voltage		-0.5 to +7.0	V
I_{IN}	Input current		-30 to +5	mA
V_{OUT}	Voltage applied to output in HIGH output state		-0.5 to +5.5	V
I_{OUT}	Current applied to output in LOW output state	$A_1 - A_8$	48	mA
		$B_1 - B_8$	128	mA
T_A	Operating free-air temperature range		0 to 70	°C

August 26, 1985

FAST 74F621, F622
Transceivers

Octal Bus Transceiver
'F621 — Non-Inverting (Open Collector)
'F622 — Inverting (Open Collector)
Product Specification

Logic Products

FEATURES

- **High impedance NPN base inputs for reduced loading (20μA in HIGH and LOW states)**
- **Octal bidirectional bus interface**
- **Open-Collector outputs sink 64mA**
  - **'F621, non-inverting**
  - **'F622, inverting**
- **15mA source current**

DESCRIPTION

The 'F621 is an octal transceiver featuring non-inverting Open-Collector bus-compatible outputs in both send and receive directions. The outputs are capable of sinking 64mA and sourcing up to 15mA, providing very good capacitive drive characteristics. The 'F622 is an inverting version of the 'F621.

These octal bus transceivers are designed for asynchronous two-way communication between data buses. The control function implementation allows for maximum flexibility in timing.

TYPE	TYPICAL PROPAGATION DELAY	TYPICAL SUPPLY CURRENT (TOTAL)
74F621	8.0ns	105mA
74F622	8.5ns	53mA

ORDERING CODE

PACKAGES	COMMERCIAL RANGE $V_{CC} = 5V \pm 10\%$; $T_A = 0°C$ to $+70°C$
Plastic DIP	N74F621N, N74F622N
Plastic SOL-20	N74F621D, N74F622D

NOTES:
1. SO package is surface-mounted micro-miniature DIP.
2. For information regarding devices processed to Military Specifications, see the Signetics Military Products Data Manual.

INPUT AND OUTPUT LOADING AND FAN-OUT TABLE

PINS	DESCRIPTION	74F(U.L.) HIGH/LOW	LOAD VALUE HIGH/LOW
$\overline{GBA}$, GAB	Enable inputs	1.0/0.033	20μA/20μA
$A_1 - A_8$, $B_1 - B_8$	3-State inputs	1.0/0.033	20μA/20μA
$A_1 - A_8$	3-State outputs	*OC/40	*OC/24mA
$B_1 - B_8$	3-State outputs	*OC/106.7	*OC/64mA

NOTES:
1. One (1.0) FAST Unit Load is defined as: 20μA in the HIGH state and 0.6mA in the LOW state.
2. *OC = Open Collector

PIN CONFIGURATION

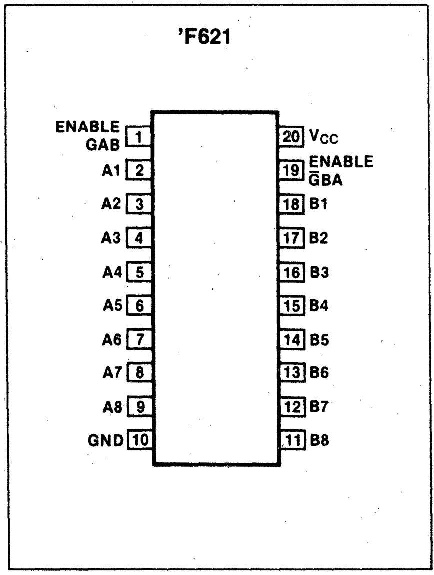
'F621
ENABLE GAB 1
A1 2
A2 3
A3 4
A4 5
A5 6
A6 7
A7 8
A8 9
GND 10
20 VCC
19 ENABLE GBA
18 B1
17 B2
16 B3
15 B4
14 B5
13 B6
12 B7
11 B8

LOGIC SYMBOL

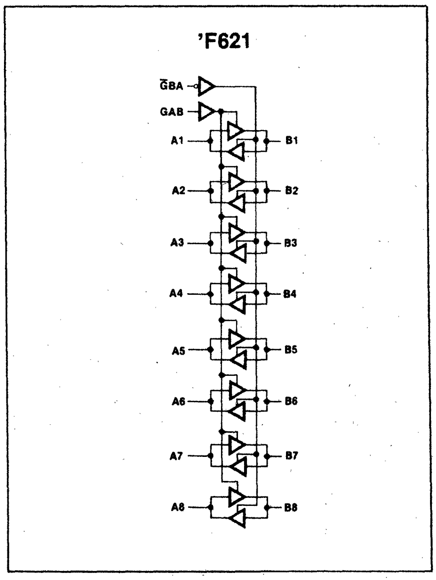
'F621
GBA
GAB
A1
A2
A3
A4
A5
A6
A7
A8
B1
B2
B3
B4
B5
B6
B7
B8

LOGIC SYMBOL (IEEE/IEC)

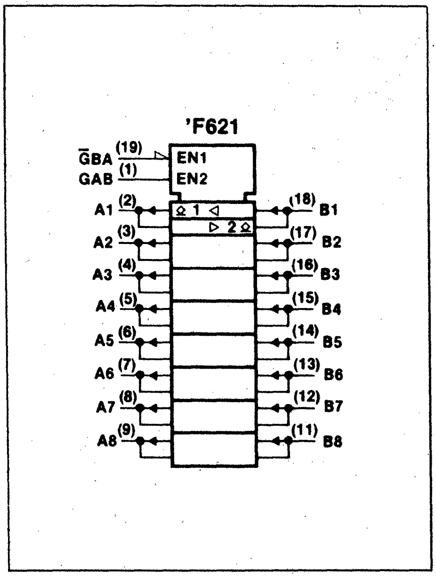
'F621
GBA (19)
GAB (1)
EN1
EN2
1
2
A1 (2)
A2 (3)
A3 (4)
A4 (5)
A5 (6)
A6 (7)
A7 (8)
A8 (9)
(18) B1
(17) B2
(16) B3
(15) B4
(14) B5
(13) B6
(12) B7
(11) B8

August 26, 1985

853-0380 80218

Transceivers

FAST 74F621, F622

PIN CONFIGURATION

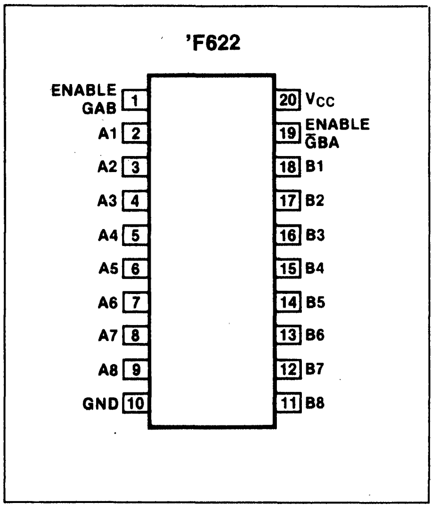
'F622
ENABLE GAB 1
A1 2
A2 3
A3 4
A4 5
A5 6
A6 7
A7 8
A8 9
GND 10
20 VCC
19 ENABLE $\overline{\text{G}}$BA
18 B1
17 B2
16 B3
15 B4
14 B5
13 B6
12 B7
11 B8

LOGIC SYMBOL

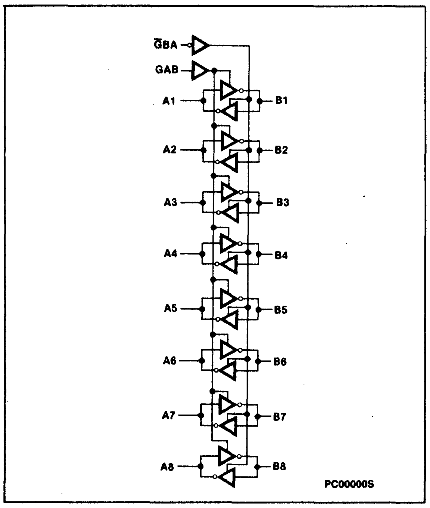
$\overline{\text{G}}$BA
GAB
A1
A2
A3
A4
A5
A6
A7
A8
B1
B2
B3
B4
B5
B6
B7
B8
PC00000S

LOGIC SYMBOL (IEEE/IEC)

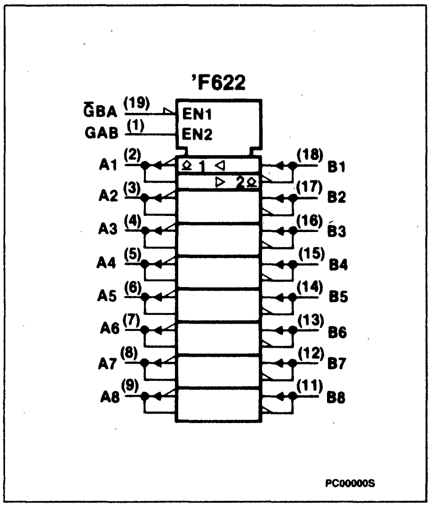
'F622
$\overline{\text{G}}$BA (19)
GAB (1)
EN1
EN2
A1 (2)
A2 (3)
A3 (4)
A4 (5)
A5 (6)
A6 (7)
A7 (8)
A8 (9)
1 ◁
▷ 2
(18) B1
(17) B2
(16) B3
(15) B4
(14) B5
(13) B6
(12) B7
(11) B8
PC00000S

These devices allow data transmission from the A bus to the B bus or from the B bus to the A bus, depending upon the logic levels at the Enable inputs ($\overline{\text{G}}$BA and GAB). The enable inputs can be used to disable the device so that the buses are effectively isolated

The dual-enable configuration gives the 'F621 and 'F622 the capability to store data by simultaneous enabling of $\overline{\text{G}}$BA and GAB. Each output reinforces its input in this transceiver configuration. Thus, when both control inputs are enabled and all other data sources to the two sets of the bus lines are at high impedance, both sets of bus lines (16 in all) will remain at their last states.

FUNCTION TABLE

ENABLE INPUTS		MODE OF OPERATION	
$\overline{\text{G}}$BA	GAB	'F621	'F622
L	L	B data to A bus	$\overline{\text{B}}$ data to A bus
H	H	A data to B bus	$\overline{\text{A}}$ data to B bus
H	L	(Z) or OFF	(Z) or OFF
L	H	B data to A bus, A data to B bus	$\overline{\text{B}}$ data to A bus, $\overline{\text{A}}$ data to B bus

H = HIGH voltage level
L = LOW voltage level
(Z) = HIGH impedance (OFF) state
OFF = HIGH if pull-up resistor is connected to Open Collector output

August 26, 1985

FAST 74F657
Transceiver

Octal Bidirectional Transceiver With 8-Bit Parity Generator/Checker (3-State Outputs)
Product Specification

Logic Products

FEATURES

- **High-impedance NPN base input for reduced loading (20μA in HIGH and LOW states)**
- **Ideal in application where high output drive and light bus loading are required (I_{IL} is 20μA Vs FAST std of 6000μA)**
- **24-pin plastic slim dip (300-mil) package**
- **Combines 'F245 and 'F280A functions in one package**
- **3-State outputs**
- **Outputs sink 64mA**
- **15mA source current**
- **Input diodes for termination effects**

DESCRIPTION

The 'F657 contains eight non-inverting buffers with 3-State outputs and an 8-bit parity generator/checker, and is intended for bus-oriented applications. The buffers have a guaranteed current sinking capability of 20mA at the A ports and 64mA at the B ports. The Transmit/Receive (T/$\overline{R}$) input determines the direction of the data flow through the bidirectional transceivers. Transmit (active HIGH) enables data from A ports to B ports; Receive (active LOW) enables data from B ports to A ports.

TYPE	TYPICAL PROPAGATION DELAY	TYPICAL SUPPLY CURRENT (TOTAL)
74F657	5ns	120mA

ORDERING CODE

PACKAGES	COMMERCIAL RANGE $V_{CC} = 5V \pm 10\%$; $T_A = 0°C$ to $+70°C$
Plastic DIP	N74F657N
Plastic SOL-24	N74F657D

NOTES:
1. SO package is surface-mounted micro-miniature DIP.
2. For information regarding devices processed to Military Specifications, see the Signetics Military Products Data Manual.

INPUT AND OUTPUT LOADING AND FAN-OUT TABLE

PINS	DESCRIPTION	74F(U.L.) HIGH/LOW	LOAD VALUE HIGH/LOW
$A_0 - A_7$	A ports 3-State inputs	5.0/0.167	100μA/100μA
$B_0 - B_7$	B ports 3-State inputs	3.5/0.117	70μA/70μA
PARITY	Parity input	3.5/0.117	70μA/70μA
T/$\overline{R}$	Transmit/receive input	2.0/0.066	40μA/40μA
EVEN/$\overline{ODD}$	EVEN/ODD input	1.0/0.033	20μA/20μA
$\overline{OE}$	Output enable input (active LOW)	2.0/0.066	40μA/40μA
$A_0 - A_7$	A ports 3-State outputs	150/40	3mA/24mA
$B_0 - B_7$	B ports 3-State outputs	750/106.7	15mA/64mA
PARITY	Parity output	150/40	3mA/24mA
$\overline{ERROR}$	Error output	150/40	3mA/24mA

NOTE:
One (1.0) FAST Unit Load is defined as: 20μA in the HIGH state and 0.6mA in the LOW state.

PIN CONFIGURATION

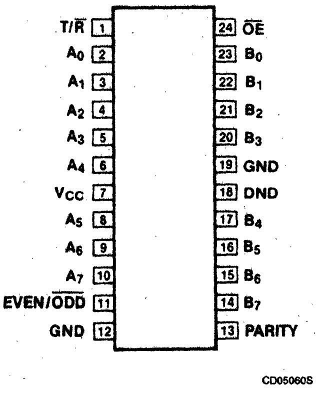
T/$\overline{R}$ 1
A_0 2
A_1 3
A_2 4
A_3 5
A_4 6
V_{CC} 7
A_5 8
A_6 9
A_7 10
EVEN/$\overline{ODD}$ 11
GND 12
24 $\overline{OE}$
23 B_0
22 B_1
21 B_2
20 B_3
19 GND
18 DND
17 B_4
16 B_5
15 B_6
14 B_7
13 PARITY
CD05060S

LOGIC SYMBOL

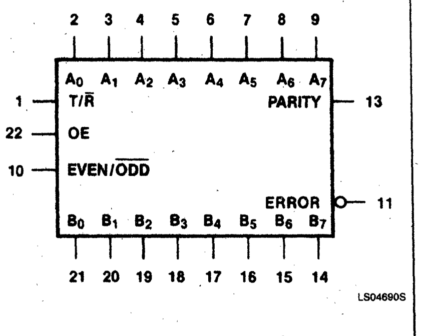
2 3 4 5 6 7 8 9
A_0 A_1 A_2 A_3 A_4 A_5 A_6 A_7
1 T/$\overline{R}$
22 OE
10 EVEN/$\overline{ODD}$
PARITY 13
ERROR 11
B_0 B_1 B_2 B_3 B_4 B_5 B_6 B_7
21 20 19 18 17 16 15 14
LS04690S

LOGIC SYMBOL (IEEE/IEC)

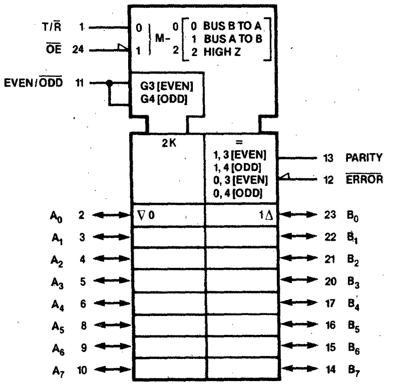
T/$\overline{R}$ 1
$\overline{OE}$ 24
0
1
M-
0 BUS B TO A
1 BUS A TO B
2 HIGH Z
EVEN/$\overline{ODD}$ 11
G3 [EVEN]
G4 [ODD]
2K
=
1, 3 [EVEN]
1, 4 [ODD]
0, 3 [EVEN]
0, 4 [ODD]
13 PARITY
12 $\overline{ERROR}$
∇0
1Δ
A_0 2
A_1 3
A_2 4
A_3 5
A_4 6
A_5 8
A_6 9
A_7 10
23 B_0
22 B_1
21 B_2
20 B_3
17 B_4
16 B_5
15 B_6
14 B_7

FOR COMPLETE DATA SHEET, Call 800-443-0100, Ext. 518

Autodirectional Bus Transceiver 8X41

DESIGN FEATURES

- **Intelligent bidirectional bus repeater with self-generating or external control**
- **Eight independent channels**
- **Open-collector outputs (meets DEC UNIBUS* specifications)**
- **TTL compatible**
- **High speed (30-nanoseconds max)**
- **Expandable to any number of bits**
- **High input impedance for every operating value of V_{CC}**
- **Low input current (less than 100-microamperes); high output current (up to 70-milliamperes)**
- **0.6 in. 24-pin DIP**
- **+5V supply**

USE AND APPLICATION

- **Minicomputers**
- **Microcomputers MOS/Bipolar**
- **Communications**
- **Signal buffer**
- **Bus fan-out extensions**
- **Distributed processing**
- **Bidirectional bus connector/isolator**

PRODUCT DESCRIPTION

The Signetics 8X41 Autodirectional Bus Transceiver is a general purpose asynchronous device ideal for system bus expansion applications. The 8X41 consists of eight data channels, each with one pair of terminals (A_i and B_i); each data channel can be operated independently.

The device requires no external controls since all intelligence is internally generated; thus, operation of the device is completely autonomous. The first logic low signal that occurs on one channel terminal (A_i or B_i) will be repeated on the corresponding terminal (B_i or A_i) of the same channel.

The 8X41 is designed for use in open-collector bus systems where high speed and low-current inputs/high-current outputs are required. In system configurations, the discrete capabilities of the bus transceiver can be expanded by parallel connection to service any number of bits. To provide reliable operation and integrity of data transfers, all channels are disabled by an on-chip power monitor whenever V_{CC} falls below approximately 4V.

FUNCTIONAL OPERATION

The 8X41 (Figure 1) consists of eight functionally independent yet logically identical channels. Each channel consists of two bus terminals (A_i and B_i); each terminal is internally connected to an open-collector driver and a high-impedance receiver. The monitoring state of each channel is defined when both terminals (A_i and B_i) are "high"; in this state, the internal logic of the 8X41 continually examines the A and B bus signals to determine signal direction—A_i to B_i or B_i to A_i. A low signal occurring at either of the two terminals causes the open-collector driver on the opposite terminal to follow suit; hence, the signal is repeated by the 8X41. For each channel, latches L1 and L2 determine signal direction. As shown in the truth table for these latches, there is no transmission of data when both signals are low; however, this condition should never occur during normal system operation.

The internal automatic direction control can be overridden by either or both of the common disable inputs—$\overline{DBA}$ and $\overline{DAB}$. When $\overline{DBA}$ is driven low ($\overline{DAB}$ = high), the B_i to A_i path is interrupted and the device becomes a unidirectional repeater in the A_i to B_i direction only. With these conditions reversed ($\overline{DAB}$ = low and $\overline{DBA}$ = high), the A_i to B_i path is interrupted and the chip functions as a unidirectional repeater in the B_i to A_i direction. When both control signals are low, data passage is inhibited in both directions. Refer to the I/O truth table for all possible input/output conditions.

8X41 PACKAGE/PIN DESIGNATIONS

N PACKAGE

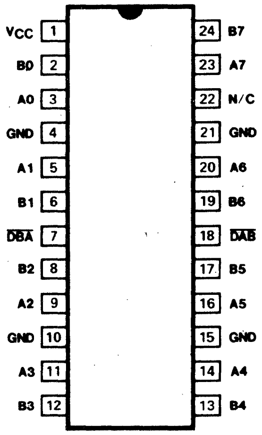

TOP VIEW

ORDER NUMBER

N8X41N

PIN NO.	IDENTIFIER	FUNCTION
1	V_{CC}	+5V power
3, 5, 9, 11, 14, 16, 20, and 23	A_0-A_7	A-bus input/output
2, 6, 8, 12, 13, 17, 19, and 24	B_0-B_7	B-bus input/output
4, 10, 15, and 21	GND	Circuit ground
7 & 18	$\overline{DBA}$ & $\overline{DAB}$	Input/output control
22	N/C	No connection

---

*Trademark of the Digital Equipment Corporation

CMOS 4000B Product Guide/Availability

TYPE NUMBER	FUNCTION	SUFFIX*
HEF4000B	Dual 3-Input NOR Gate and Inverter	P, T
HEF4001B	Quad 2-Input NOR Gate	P, T
HEF4001UB	Quad 2-Input NOR Gate, Unbuffered	P, T
HEF4002B	Dual 4-Input NOR Gate	P, T
HEF4006B	18-Stage Static Shift Register	P, T
HEF4007UB	Dual Complementary Pair and Inverter	P, T
HEF4008B	4-Bit Binary Full Adder	P, T
HEF4011B	Quad 2-Input NAND Gate	P, T
HEF4011UB	Quad 2-Input NAND Gate, Unbuffered	P, T
HEF4012B	Dual 4-Input NAND Gate	P, T
HEF4013B	Dual D-Type Flip-Flop	P, T
HEF4014B	8-Bit Static Shift Register	P, T
HEF4015B	Dual 4-Bit Static Shift Register	P, T
HEF4016B	Quad Bilateral Switches	P, T
HEF4017B	5-Stage Johnson Counter	P. T
HEF4018B	Presettable Divide-by-n Counter	P, T
HEF4019B	Quad 2-Input Multiplexer	P, T
HEF4020B	14-Stage Binary Counter	P, T
HEF4021B	8-Bit Static Shift Register	P, T
HEF4022B	4-Stage Divide-by-8 Johnson Counter	P, T
HEF4023B	Triple 3-Input NAND Gate	P, T
HEF4024B	7-Stage Binary Counter	P, T
HEF4025B	Triple 3-Input NOR Gate	P, T
HEF4027B	Dual JK Flip-Flop	P, T
HEF4028B	1-of-10 Decoder	P, T
HEF4029B	Synchronous Up/Down-Binary/ Decade Counter	P, T
HEF4030B	Quad Exclusive-OR Gate	P, T
HEF4031B	64-Stage Static Shift Register	P, T
HEF4035B	4-Bit Universal Shift Register	P, T
HEF4040B	12-Stage Binary Counter	P, T
HEF4041B	Quad True/Complement Buffer	P, T
HEF4042B	Quad D-Latch	P, T
HEF4043B	Quad R/S Latch with 3-State Outputs	P, T
HEF4044B	Quad R/S Latch with 3-State Outputs	P, T
HEF4046B	Phase-Locked Loop	P, T
HEF4047B	Monostable/Astable Multivibrator	P, T
HEF4049B	Hex Inverting Buffers	P, T
HEF4050B	Hex Non-Inverting Buffers	P, T
HEF4051B	8-Channel Analog Multiplexer/ Demultiplexer	P, T
HEF4052B	Dual 4-Channel Analog Multiplexer/ Demultiplexer	P, T
HEF4053B	Triple 2-Channel Analog Multiplexer/Demultiplexer	P, T
HEF4059B	Programmable Divide-by-n Counter	P, T
HEF4060B	14-Stage Ripple-Carry Binary Counter/Divider and Oscillator	P, T
HEF4066B	Quad Bilateral Switches	P, T
HEF4067B	16-Channel Analog Multiplexer/ Demultiplexer	P, T

TYPE NUMBER	FUNCTION	SUFFIX*
HEF4068B	8-Input NAND Gate	P, T
HEF4069UB	Hex Inverter	P, T
HEF4070B	Quad Exclusive-OR Gate	P, T
HEF4071B	Quad 2-Input OR Gate	P, T
HEF4072B	Dual 4-Input OR Gate	P, T
HEF4073B	Triple 3-Input AND Gate	P, T
HEF4075B	Triple 3-Input OR Gate	P, T
HEF4076B	Quad D-Type Register with 3-State Outputs	P, T
HEF4077B	Quad Exclusive-NOR Gate	P, T
HEF4078B	8-Input NOR Gate	P, T
HEF4081B	Quad 2-Input AND Gate	P, T
HEF4082B	Dual 4-Input AND Gate	P, T
HEF4085B	Dual 2-Wide 2-Input AND-OR-Invert Gate	P, T
HEF4086B	4-Wide 2-Input AND-OR-Invert Gate	P, T
HEF4093B	Quad 2-Input NAND Schmitt Trigger	P, T
HEF4094B	8-Stage Shift-and-Store Bus Register	P, T
HEF4104B	Quad Low-to-High Voltage Translator	P, T
HEF4502B	Strobed Hex Inverter/Buffer	P, T
HEF4505B	64-Bit Static Read/Write RAM	P
HEF4508B	Dual 4-Bit Latch	P, T
HEF4510B	BCD Up/Down Counter	P, T
HEF4511B	BCD to 7-Segment Latch/Decoder/ Driver	P, T
HEF4512B	8-Input Multiplexer with 3-State Output	P, T
HEF4514B	1-of-16 Decoder/Demultiplexer with Input Latches	P, T
HEF4515B	1-of-16 Decoder/Demultiplexer with Input Latches	P, T
HEF4516B	Binary Up/Down Counter	P, T
HEF4517B	Dual 64-Bit Static Shift Register	P, T
HEF4518B	Dual BCD Counter	P, T
HEF4519B	Quad 2-Input Multiplexer	P, T
HEF4520B	Dual Binary Counter	P, T
HEF4521B	24-Stage Frequency Divider	P, T
HEF4522B	Programmable 4-Bit BCD Down Counter	P, T
HEF4526B	Programmable 4-Bit Binary Down Counter	P, T
HEF4527B	BCD Rate Multiplier	P, T
HEF4528B	Dual Monostable Multivibrator	P, T
HEF4531B	13-Input Parity Checker/Generator	P, T
HEF4532B	8-Input Priority Encoder	P, T
HEF4534B	Real-Time 5-Decade Counter	P, T
HEF4538B	Dual Precision Monostable Multivibrator	P, T
HEF4539B	Dual 4-Input Multiplexer	P, T

P = Plastic Package (DIL); T = SO Package; *Add the Suffix to the Type Number on all orders.

CMOS 4000B Product Guide/Availability

TYPE NUMBER	FUNCTION	SUFFIX*
HEF4541B	Programmable Timer	P, T
HEF4543B	BCD to 7-Segment Latch/Decoder/Driver	P, T
HEF4555B	Dual 1-of-4 Decoder/Demultiplexer	P, T
HEF4556B	Dual 1-of-4 Decoder/Demultiplexer	P, T
HEF4557B	1-to-64 Bit Variable Length Shift Register	P, T
HEF4585B	4-Bit Magnitude Comparator	P, T
HEF4720B; V	256-Bit 1-Bit per Word RAM	P, T
HEF4724B	8-Bit Addressable Latch	P, T
HEF4731B; V	Quad 64-Bit Static Shift Register	P
HEF4737B; V	Quad Static Decade Counters	P
HEF4738V	IEC/IEEE Bus Interface	P
HEF4750V	Frequency Synthesizer	D
HEF4751V	Universal Divider	D, P
HEF4752V	AC Motor Control Circuit	P
HEF4754V	18-Element Bar Graph LCD Driver	P, T
HEF40097B	3-State Hex Non-Inverting Buffer	P, T
HEF40098B	3-State Hex Inverting Buffer	P, T
HEF40106B	Hex Schmitt Trigger	P, T
HEF40160B	4-Bit Synchronous Decade Counter, Asynchronous Reset	P, T
HEF40161B	4-Bit Synchronous Binary Counter, Asynchronous Reset	P, T

TYPE NUMBER	FUNCTION	SUFFIX*
HEF40162B	4-Bit Synchronous Decade Counter, Synchronous Reset	P, T
HEF40163B	4-Bit Synchronous Binary Counter, Synchronous Reset	P, T
HEF40174B	Hex D-Type Flip-Flop	P, T
HEF40175B	Quad D-Type Flip-Flop	P, T
HEF40192B	4-Bit Up/Down Decade Counter	P, T
HEF40193B	4-Bit Up/Down Binary Counter	P, T
HEF40194B	4-Bit Bidirectional Universal Shift Register	P, T
HEF40195B	4-Bit Universal Shift Register	P, T
HEF40240B	Octal Inverting Buffers with 3-State Outputs	P, T
HEF40244B	Octal Buffers with 3-State Outputs	P, T
HEF40245B	Octal Bus Transceiver with 3-State Outputs	P, T
HEF40373B	Octal Transparent Latch with 3-State Outputs	P, T
HEF40374B	Octal D-Type Flip-Flop with 3-State Outputs	P, T

P = Plastic Package (DIL); T = SO Package; *Add the Suffix to the Type Number on all orders.

PRODUCT IDENTIFICATION

HEF 4000 BXY

HE : Serial Letters
F : – 40°C/+ 85°C OPERATING
(U) B : (Un) Buffered Output Stage

PACKAGE (X)

P : Plastic
T : SO (Miniature)

DATE CODE:

H = Nijmegen — NL
S = Philips Taiwan
N = Signetics — BKK

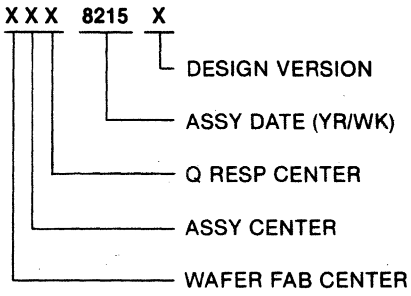

EXAMPLE:

HEF40245BP
HRH8215 1

ORDERING INFORMATION

Plastic Device HEF4XXX BPN*
SO Package HEF4XXX BTD*

*NOTE: The suffix N or D does not appear on the part marking; it is used only for internal order entry.

CMOS 4000B Family Characteristics

ABSOLUTE MAXIMUM RATINGS

SYMBOL AND PARAMETER		RATING	UNIT
V_{DD}	Supply voltage	−0.5 to +18	V
V_I	Voltage on any input	−0.5 to V_{DD} +0.5V	V
±I	Current into any input or output	10	mA
T_{stg}	Storage temperature	−65 to +150	°C
T_{amb}	Operating ambient temperature	−40 to +85	°C

AC ELECTRICAL CHARACTERISTICS

Clock input rise and fall times (t_r, t_f)

The upper limits on t_r and t_f vary widely from device to device and with supply voltage. Unless otherwise specified in the individual data sheets it is recommended that input rise and fall times be less than 15 μs for V_{DD} = 5 V; 4 μs for V_{DD} = 10 V; 1 μs for V_{DD} = 15 V.

Output transition times (t_{TLH}, t_{THL})

V_{SS} = 0 V; T_{amb} = 25°C; C_L = 50 pF; input transition times ≤ 20 ns

SYMBOL AND PARAMETER		TEST CONDITION	Min	Typ	Max	UNIT
t_{THL}	Output transition time HIGH to LOW	V_{DD} = 5V, 10_{ns} + (1.0 ns/pF) C_L		60	120	ns
		V_{DD} = 10V, 9_{ns} + (0.42 ns/pF) C_L		30	60	
		V_{DD} = 15 V, 6_{ns} + (0.28 ns/pF) C_L		20	40	
t_{TLH}	Output transition time HIGH to LOW	V_{DD} = 5V, 10_{ns} + (1.0 ns/pF) C_L		60	120	ns
		V_{DD} = 10V, 9_{ns} + (0.42 ns/pF) C_L		30	60	
		V_{DD} = 15 V, 6_{ns} + (0.28 ns/pF) C_L		20	40	

Temperature coefficient (typical values)

Propagation delays	+0.35%/°C
Output transition times	+0.35%/°C

Input capacitance (digital inputs)
Maximum input capacitance C_I = 7.5 pF.

CMOS 4000B Family Characteristics

DC ELECTRICAL CHARACTERISTICS V_{SS} = 0V; for all devices unless otherwise specified

SYMBOL AND PARAMETER			TEST CONDITIONS		T_{amb} (°C)						UNIT
					−40		+25		+85		
					Min	Max	Min	Max	Min	Max	
I_{DD}	Quiescent device current	Gates	$V_I = V_{SS}$ or V_{DD}, all valid input combinations	V_{DD} = 5V		1.0		1.0		7.5	μA
				V_{DD} = 10V		2.0		2.0		15.0	
				V_{DD} = 15V		4.0		4.0		30.0	
		Buffers and flip-flops	$V_I = V_{SS}$ or V_{DD}, all valid input combinations	V_{DD} = 5V		4.0		4.0		30	
				V_{DD} = 10V		8.0		8.0		60	
				V_{DD} = 15V		16.0		16.0		120	
		MSI	$V_I = V_{SS}$ or V_{DD}, all valid input combinations	V_{DD} = 5V		20		20		150	
				V_{DD} = 10V		40		40		300	
				V_{DD} = 15V		80		80		600	
		LSI	$V_I = V_{SS}$ or V_{DD}, all valid input combinations	V_{DD} = 5V		50		50		375	
				V_{DD} = 10V		100		100		750	
				V_{DD} = 15V		200		200		1500	
V_{OL}	LOW-level output voltage		$V_I = V_{SS}$ or V_{DD}, $\|I_O\| < 1\mu A$	V_{DD} = 5V		0.05		0.05		0.05	V
				V_{DD} = 10V		0.05		0.05		0.05	
				V_{DD} = 15V		0.05		0.05		0.05	
V_{OH}	HIGH-level output voltage		$V_I = V_{SS}$ or V_{DD}, $\|I_O\| < 1\mu A$	V_{DD} = 5V	4.95		4.95		4.95		V
				V_{DD} = 10V	9.95		9.95		9.95		
				V_{DD} = 15V	14.95		14.95		14.95		
V_{IL}	LOW-level input voltage (buffered stages only)		V_O = 0.5V or 4.5V, $\|I_O\| < 1\mu A$	V_{DD} = 5V		1.5		1.5		1.5	V
			V_O = 1.0V or 9.0V, $\|I_O\| < 1\mu A$	V_{DD} = 10V		3.0		3.0		3.0	
			V_O = 1.5 or 13.5V, $\|I_O\| < 1\mu A$	V_{DD} = 15V		4.0		4.0		4.0	
V_{IH}	HIGH-level input voltage (buffered stages only)		V_O = 0.5V or 4.5V, $\|I_O\| < 1\mu A$	V_{DD} = 5V	3.5		3.5		3.5		V
			V_O = 1.0V or 9.0V, $\|I_O\| < 1\mu A$	V_{DD} = 10V	7.0		7.0		7.0		
			V_O = 1.5 or 13.5V, $\|I_O\| < 1\mu A$	V_{DD} = 15V	11.0		11.0		11.0		
V_{IL}	LOW-level input voltage (unbuffered stages only)		V_O = 0.5V or 4.5V, $\|I_O\| < 1\mu A$	V_{DD} = 5V		1		1		1	V
			V_O = 1.0V or 9.0V, $\|I_O\| < 1\mu A$	V_{DD} = 10V		2		2		2	
			V_O = 1.5 or 13.5V, $\|I_O\| < 1\mu A$	V_{DD} = 15V		2.5		2.5		2.5	
V_{IH}	HIGH-level input voltage (unbuffered stages only)		V_O = 0.5V or 4.5V, $\|I_O\| < 1\mu A$	V_{DD} = 5V	4		4		4		V
			V_O = 1.0V or 9.0V, $\|I_O\| < 1\mu A$	V_{DD} = 10V	8		8		8		
			V_O = 1.5 or 13.5V, $\|I_O\| < 1\mu A$	V_{DD} = 15V	12.5		12.5		12.5		
I_{OL}	LOW-level output (sink) current		V_O = 0.4V, V_I = 0 or 5V	V_{DD} = 5V	0.52		0.44		0.36		mA
			V_O = 0.5V, V_I = 0 or 10V	V_{DD} = 10V	1.3		1.1		0.9		
			V_O = 1.5V, V_I = 0 or 15V	V_{DD} = 15V	3.6		3.0		2.4		
$-I_{OH}$	HIGH-level output (source) current		V_O = 4.6, V_I = 0 or 5V	V_{DD} = 5V	0.52		0.44		0.36		mA
			V_O = 9.5, V_I = 0 or 10V	V_{DD} = 10V	1.3		1.1		0.9		
			V_O = 13.5V, V_I = 0 or 15V	V_{DD} = 15V	3.6		3.0		2.4		
$-I_{OH}$	HIGH-level output (source) current		V_O = 2.5V, V_I = 0 or 5V	V_{DD} = 5V	1.7		1.4		1.1		mA
$\pm I_{IN}$	Input leakage current		V_I = 0 = 15V	V_{DD} = 15V		0.3		0.3		1.0	μA
I_{OZH}	HIGH-level 3-state output leakage current		Output returned to V_{DD}	V_{DD} = 15V		1.6		1.6		12.0	μA
$-I_{OZL}$	LOW-level 3-state output leakage current		Output returned to V_{SS}	V_{DD} = 15V		1.6		1.6		12.0	μA

HCMOS Product Availability Guide

DEVICE	PIN	DESCRIPTION	AVAIL-ABILITY
74HC/HCT00	14	Quad 2-input NAND gate	A
74HC/HCT02	14	Quad 2-input NOR gate	A
74HC/HCT03	14	Quad 2-input open-drain NAND gate	A
74HC/HCT04	14	Hex inverter	A
74HCU04	14	Hex inverter, unbuffered	A
74HC08	14	Quad 2-input AND gate	A
74HCT08	14	Quad 2-input AND gate	A
74HC/HCT10	14	Triple 3-input NAND gate	A
74HC/HCT11	14	Triple 3-input AND gate	A
74HC/HCT14	14	Hex inverting Schmitt trigger	A
74HC/HCT20	14	Dual 4-input NAND gate	A
74HC/HCT21	14	Dual 4-input AND gate	Q2 '86
74HC/HCT27	14	Triple 3-input NOR gate	A
74HC/HCT30	14	8-input NAND gate	Q1 '86
74HC/HCT32	14	Quad 2-input OR gate	A
74HC/HCT42	16	BCD-to-decimal decoder, 1 to 10	Q1 '86
74HC/HCT58	14	Dual 4-input AND-OR gate	A
74HC/HCT73	14	Dual J-K flip-flop w/reset, negative-edge trigger	A
74HC/HCT74	14	Dual D-type flip-flop w/set and reset, positive-edge trigger	A
74HC/HCT75	16	4-bit bistable latch	A
74HC/HCT85	16	4-bit magnitude comparator	A
74HC/HCT86	14	Quad 2-input Exclusive-OR gate	A
74HC/HCT93	14	4-stage binary ripple counter	A
74HC/HCT107	14	Dual J-K flip-flop w/reset, negative-edge trigger	A
74HC/HCT109	16	Dual J-K flip-flop w/set and reset, positive-edge trigger	A
74HC/HCT112	16	Dual J-K flip-flop w/set and reset, negative-edge trigger	A
74HC/HCT123	16	Dual retriggerable monostable multivibrator w/reset	A
74HC/HCT125	14	Quad buffer, 3-state	A
74HC/HCT126	14	Quad buffer, 3-state	A
74HC/HCT132	14	Quad 2-input NAND Schmitt trigger	A
74HC/HCT137	16	3-to-8 line inverting decoder/multiplexer w/address latches	Q2 '86
74HC/HCT138	16	3-to-8 line inverting decoder/multiplexer	A
74HC/HCT139	16	Dual 2-to-4 decoder/multiplexer	A
74HC/HCT147	16	10-to-4 line priority encoder	A
74HC/HCT151	16	8-input multiplexer	A

A = Available Q1' 86 = 1st Quarter of 1986 Q2 '86 = 2nd Quarter of 1986
*no SMD yet.

DEVICE	PIN	DESCRIPTION	AVAIL-ABILITY
74HC/HCT153	16	Dual 4-input multiplexer	A
74HC/HCT154	24	4-to-16 decoder/multiplexer	A
74HC/HCT157	16	Quad 2-input multiplexer	A
74HC/HCT158	16	Quad 2-input inverting multiplexer	A
74HC/HCT160	16	Synchronous BCD decade counter, asynchronous reset	A
74HC/HCT161	16	Synchronous 4-bit binary counter, asynchronous reset	A
74HC/HCT162	16	Synchronous BCD decade counter, synchronous reset	A
74HC/HCT163	16	Synchronous 4-bit binary counter, synchronous reset	A
74HC/HCT164	14	8-bit serial-in/parallel-out shift register	A
74HC/HCT165	16	8-bit parallel-in/serial-out shift register	A
74HC/HCT166	16	8-bit serial- or parallel-in/serial-out shift register	A
74HC/HCT173*	16	Quad D-type flip-flop, positive-edge trigger, 3-state	A
74HC/HCT174	16	Hex D-type flip-flop w/reset, positive-edge trigger	A
74HC/HCT175	16	Quad D-type flip-flop w/reset, positive-edge trigger	A
74HC/HCT181	24	4-bit arithmetic logic unit	Q2 '86
74HC/HCT182	16	Look-ahead carry generator	A
74HC/HCT190	16	Presettable BCD synchronous decade up/down counter	A
74HC/HCT191	16	Presettable 4-bit synchronous binary up/down counter	A
74HC/HCT192	16	Presettable BCD synchronous decade up/down counter w/reset	Q2 '86
74HC/HCT193	16	Presettable 4-bit synchronous binary up/down counter w/reset	A
74HC/HCT194	16	4-bit bidirectional universal shift register	A
74HC/HCT195	16	4-bit parallel access shift register	A
74HC/HCT221	16	Dual monostable multivibrator w/reset	Q1 '86
74HC/HCT237	16	1-to-8 line decoder/demultiplexer w/address latches	Q1 '86
74HC/HCT238	16	1-to-8 line decoder/demultiplexer w/reset	A

HCMOS Product Availability Guide

DEVICE	PIN	DESCRIPTION	AVAIL-ABILITY
74HC/HCT240	20	Octal inverting buffer, 3-state	A
74HC/HCT241	20	Octal buffer, 3-state	A
74HC/HCT242*	14	Quad inverting transceiver, 3-state	A
74HC/HCT243*	14	Quad transceiver, 3-state	A
74HC/HCT244	20	Octal buffer, 3-state	A
74HC/HCT245	20	Octal transceiver, 3-state	A
74HC/HCT251	16	8-input multiplexer, 3-state	A
74HC/HCT253	16	Dual 4-input multiplexer, 3-state	A
74HC/HCT257	16	Quad 2-input multiplexer, 3-state	A
74HC/HCT258	16	Quad 2-to-1 data selector/multiplexer, 3-state	Q1 '86
74HC/HCT259	16	8-bit addressable latch	A
74HC7266	14	Quad 2-input Exclusive-NOR gate	A
74HC/HCT273	20	Octal D-type flip-flop w/reset, positive-edge trigger	A
74HC/HCT280	14	9-bit odd/even parity generator/checker	A
74HC/HCT283	16	4-bit binary full adder w/fast carry	A
74HC/HCT297	16	Digital phase-locked loop filter	A
74HC/HCT299	20	8-bit universal shift register, 3-state	A
74HC/HCT354	20	8-bit multiplexer/register, 3-state	Q2 '86
74HC/HCT356	20	8-bit multiplexer/register, 3-state	Q1 '86
74HC/HCT365	16	Hex buffer, 3-state	A
74HC/HCT366	16	Hex inverting buffer, 3-state	A
74HC/HCT367	16	Hex buffer, 3-state	A
74HC/HCT368	16	Hex inverting buffer, 3-state	A
74HC/HCT373	20	Octal transparent latch, 3-state	A
74HC/HCT374	20	Octal D-type flip-flop, positive-edge trigger, 3-state	A
74HC/HCT377	20	Octal D-type flip-flop w/data enable, positive-edge trigger	A
74HC/HCT390	16	Dual decade ripple counter	A
74HC/HCT393	14	Dual 4-bit binary ripple counter	A
74HC/HCT423	16	Dual retriggerable monostable multivibrator w/reset	A
74HC/HCT533	20	Octal transparent inverting latch, 3-state	A

DEVICE	PIN	DESCRIPTION	AVAIL-ABILITY
74HC/HCT534	20	Octal D-type inverting flip-flop, positive-edge trigger, 3-state	A
74HC/HCT540	20	Octal inverting buffer, 3-state	Q1 '86
74HC/HCT541	20	Octal buffer, 3-state	Q1 '86
74HC/HCT563	20	Octal transparent inverting latch, 3-state	A
74HC/HCT564	20	Octal D-type inverting flip-flop, positive-edge trigger, 3-state	A
74HC/HCT573	20	Octal transparent latch, 3-state	A
74HC/HCT574	20	Octal D-type flip-flop, positive-edge trigger, 3-state	A
74HC/HCT583	16	BCD adder	Q2 '86
74HC/HCT597	16	8-bit shift register w/input flip-flops	Q1 '86
74HC/HCT640	20	Octal inverting transceiver, 3-state	A
74HC/HCT643	20	Octal true/inverting transceiver, 3-state	A
74HC/HCT646	24	Octal transceiver/register, 3-state	A
74HC/HCT648	24	Octal inverting transceiver/register, 3-state	A
74HC/HCT670	16	4 × 4 register file, 3-state	A
74HC/HCT688	20	8-bit magnitude comparator	A
74HC/HCT4002	14	Dual 4-input NOR gate	A
74HC/HCT4015	16	Dual 4-bit serial-in/parallel-out shift register	A
74HC/HCT4016	14	Quad bilateral switch	A
74HC/HCT4017	16	Johnson decade counter w/10 decoded inputs	A
74HC/HCT4020	16	14-stage binary ripple counter	A
74HC/HCT4024	14	7-stage binary ripple counter	A
74HC/HCT4040	16	12-stage binary ripple counter	A
74HC/HCT4046A	16	Phase-locked loop w/VCO	A
74HC4049	16	Hex inverting HIGH-to-LOW level shifter	A
74HC4050	16	Hex HIGH-to-LOW level shifter	A
74HC/HCT4051	16	8-channel analog multiplexer/demultiplexer	A
74HC/HCT4052	16	Dual 4-channel analog multiplexer/demultiplexer	A
74HC/HCT4053	16	Triple 2-channel analog multiplexer/demultiplexer	A
74HC/HCT4059	24	Programmable divide-by-n counter	Q2 '86
74HC/HCT4060	16	14-stage binary ripple counter w/oscillator	A

A = Available Q1' 86 = 1st Quarter of 1986 Q2 '86 = 2nd Quarter of 1986
*no SMD yet.

HCMOS Product Availability Guide

DEVICE	PIN	DESCRIPTION	AVAIL-ABILITY
74HC/HCT4066	14	Quad bilateral switch	Q1 '86
74HC/HCT4067	24	16-channel analog multiplexer/demultiplexer	Q1 '86
74HC/HCT4075	14	Triple 3-input OR gate	A
74HC/HCT4094	16	8-stage shift and store bus register	A
74HC/HCT4316	16	Quad bilateral switch	A
74HC/HCT4351	20	8-channel analog multiplexer/demultiplexer w/latch	A
74HC/HCT4352	20	Dual 4-channel analog multiplexer/demultiplexer w/latch	Q2 '86
74HC/HCT4353	20	Triple 2-channel analog multiplexer/demultiplexer w/latch	Q1 '86
74HC/HCT4510	16	BCD up/down counter	Q2 '86
74HC/HCT4511	16	BCD-to-7-segment latch/decoder/driver	A
74HC/HCT4514	24	4-to-16 decoder/multiplexer w/input latches	A
74HC/HCT4515	24	4-to-16 decoder/multiplexer w/input latches	A
74HC/HCT4516	16	Binary up/down counter	Q2 '86
74HC/HCT4518*	16	Dual synchronous BCD counter	A
74HC/HCT4520*	16	Dual 4-bit synchronous binary counter	A

DEVICE	PIN	DESCRIPTION	AVAIL-ABILITY
74HC/HCT4538	16	Dual retriggerable precision monstable multivibrator	A
74HC/HCT4543	16	BCD-to-7-segment latch/decoder/driver for LCDs	A
74HC/HCT7030	28	9-bit × 16 words expandable FIFO register	Q2 '86
74HC/HCT7046	16	Phase-locked loop with lock detector	Q1 '86
74HC/HCT7597	20	8-bit shift register w/input latches	A
74HC/HCT40102	16	8-bit synchronous BCD down counter	Q2 '86
74HC/HCT40103	16	8-bit binary down counter	A
74HC/HCT40104	16	4-bit bidirectional universal shift register, 3-state	A
74HC/HCT40105	16	4-bit × 16 word FIFO register	A

A = Available Q1' 86 = 1st Quarter of 1986 Q2 '86 = 2nd Quarter of 1986
*no SMD yet.

Type Number Designations

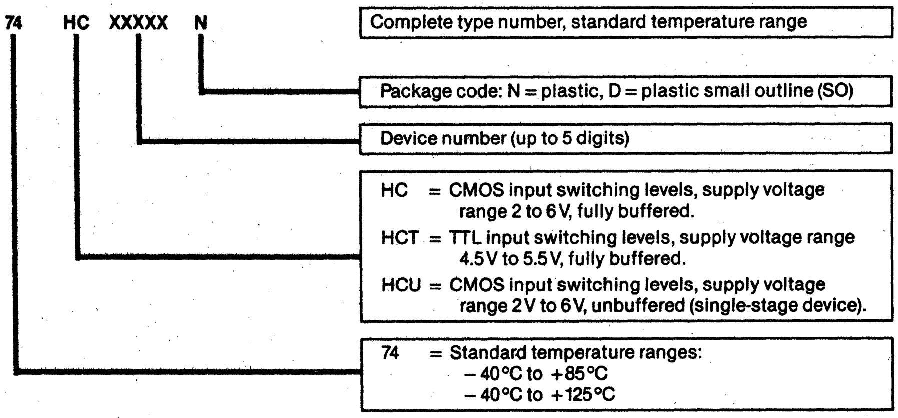

74 HC XXXXX N

Complete type number, standard temperature range

Package code: N = plastic, D = plastic small outline (SO)

Device number (up to 5 digits)

HC = CMOS input switching levels, supply voltage range 2 to 6V, fully buffered.
HCT = TTL input switching levels, supply voltage range 4.5V to 5.5V, fully buffered.
HCU = CMOS input switching levels, supply voltage range 2V to 6V, unbuffered (single-stage device).

74 = Standard temperature ranges:
−40°C to +85°C
−40°C to +125°C

High-Speed CMOS Family Characteristics

AC characteristics for 74HC

GND = 0V; $t_r = t_f = 6$ns; $C_L = 50$pF

Symbol	Parameter	T_{amb} (°C)							Unit	Test Conditions
		74HC								V_{CC} V
		+25			−40 to +85		−40 to +125			
		min.	typ.	max.	min.	max.	min.	max.		
t_{THL} / t_{TLH}	Output transition time standard outputs			75 15 13		95 19 16		110 22 19	ns	2.0 4.5 6.0
t_{THL} / t_{TLH}	Output transition time bus driver outputs			60 12 10		75 15 13		90 18 15	ns	2.0 4.5 6.0

AC characteristics for 74HCU

GND = 0V; $t_r = t_f = 6$ns; $C_L = 50$pF

Symbol	Parameter	T_{amb} (°C)							Unit	Test Conditions
		74HCU								V_{CC} V
		+25			−40 to +85		−40 to +125			
		min.	typ.	max.	min.	max.	min.	max.		
t_{THL} / t_{TLH}	Output transition time			75 15 13		95 19 16		110 22 19	ns	2.0 4.5 6.0

AC characteristics for 74HCT

GND = 0V; $t_r = t_f = 6$ns; $C_L = 50$pF

Symbol	Parameter	T_{amb} (°C)							Unit	Test Conditions
		74HCT								V_{CC} V
		+25			−40 to +85		−40 to +125			
		min.	typ.	max.	min.	max.	min.	max.		
t_{THL} / t_{TLH}	Output transition time standard outputs			15		19		22	ns	4.5
t_{THL} / t_{TLH}	Output transition time bus driver outputs			12		15		18	ns	4.5

Recommended operating conditions for 74HC/HCT/HCU

Symbol	Parameter	74HC/HCU			74HCT			Unit	Conditions
		min.	typ.	max.	min.	typ.	max.		
V_{CC}	DC supply voltage	2.0	5.0	6.0	4.5	5.0	5.5	V	
V_I	DC input voltage range	0		V_{CC}	0		V_{CC}	V	
V_O	DC output voltage range	0		V_{CC}	0		V_{CC}	V	
T_{amb}	operating ambient temperature range	−40		+85	−40		+85	°C	
T_{amb}	operating ambient temperature range	−40		+125	−40		+125	°C	
t_r, t_f	Input rise and fall times except for Schmitt-trigger inputs and HCU devices		6.0	1000 500 400		6.0	500	ns	$V_{CC} = 2.0$V $V_{CC} = 4.5$V $V_{CC} = 6.0$V

High-Speed CMOS Family Characteristics

DC characteristics for 74HCT

Voltages are referenced to GND (ground = 0 V)

Symbol	Parameter	T_{amb} (°C)							Unit	Test Conditions		
		74HCT								V_{CC} V	V_I	Other
		+25			−40 to +85		−40 to +125					
		min.	typ.	max.	min.	max.	min.	max.				
V_{IH}	HIGH level input voltage	2.0			2.0		2.0		V	4.5 to 5.5		
V_{IL}	LOW level input voltage			0.8		0.8		0.8	V	4.5 to 5.5		
V_{OH}	HIGH level output voltage all outputs	4.4	4.5		4.4		4.4		V	4.5	V_{IH} or V_{IL}	$-I_O = 20\mu A$
V_{OH}	HIGH level output voltage standard outputs	3.98			3.84		3.7		V	4.5	V_{IH} or V_{IL}	$-I_O = 4.0 mA$
V_{OH}	HIGH level output voltage bus driver outputs	3.98			3.84		3.7		V	4.5	V_{IH} or V_{IL}	$-I_O = 6.0 mA$
V_{OL}	LOW level output voltage all outputs		0	0.1		0.1		0.1	V	4.5	V_{IH} or V_{IL}	$I_O = 20\mu A$
V_{OL}	LOW level output voltage standard outputs			0.26		0.33		0.4	V	4.5	V_{IH} or V_{IL}	$I_O = 4.0 mA$
V_{OL}	LOW level output voltage bus driver outputs			0.26		0.33		0.4	V	4.5	V_{IH} or V_{IL}	$I_O = 6.0 mA$
$\pm I_I$	input leakage current			0.1		1.0		1.0	μA	5.5	V_{IH} or V_{IL}	
$\pm I_S$	Analog switch OFF-state current per channel			0.1		1.0		1.0	μA	5.5	V_{IH} or V_{IL}	$\lvert V_S \rvert = V_{CC}$ (Note 1)
$\pm I_S$	Analog switch ON-state leakage current			0.2		2.0		2.0	μA	5.5	V_{IH} or V_{IL}	$\lvert V_S \rvert = V_{CC}$ (Note 1)
$\pm I_{OZ}$	3-state OFF-state current			0.5		5.0		10.0	μA	5.5	V_{IH} or V_{IL}	$V_O = V_{CC}$ or GND per input pin; other inputs at V_{CC} or GND; $I_O = 0$
I_{CC}	Quiescent supply current SSI flip-flops MSI			 2.0 4.0 8.0		 20.0 40.0 80.0		 40.0 80.0 160.0	 μA μA μA	 6.0 6.0 6.0	V_{CC} or GND	 $I_O = 0$ $I_O = 0$ $I_O = 0$
ΔI_{CC}	Additional quiescent supply current per input pin for unit load coefficient is 1 (Note 2)		100	360		450		490	μA	4.5 to 5.5	V_{CC} −2.1V	Other inputs at V_{CC} or GND; $I_O = 0$

Notes

1. If applicable V_{EE} = GND.
2. The additional quiescent supply current per input is determined by the ΔI_{CC} unit load, which has to be multiplied by the unit load coefficient as given in the individual data sheets. For dual supply systems the theoretical worst-case (V_I = 2.4 V; V_{CC} = 5.5 V) specification is: ΔI_{CC} = 0.65 mA (typical) and 1.8 mA (maximum) across temperature.

High-Speed CMOS Family Characteristics

DC characteristics for 74HC

Voltages are referenced to GND (ground = 0V)

Symbol	Parameter	T_{amb} (°C)							Unit	Test Conditions		
		74HC								V_{CC} V	V_I	Other
		+25			−40 to +85		−40 to +125					
		min.	typ.	max.	min.	max.	min.	max.				
V_{IH}	HIGH level input voltage	1.5 3.15 4.2	1.3 2.4 3.1		1.5 3.15 4.2		1.5 3.15 4.2		V	2.0 4.5 6.0		
V_{IL}	LOW level input voltage		0.7 1.8 2.3	0.5 1.35 1.8		0.5 1.35 1.8		0.5 1.35 1.8	V	2.0 4.5 6.0		
V_{OH}	HIGH level output voltage all outputs	1.9 4.4 5.9	2.0 4.5 6.0		1.9 4.4 5.9		1.9 4.4 5.9		V	2.0 4.5 6.0	V_{IH} or V_{IL}	$-I_O = 20\mu A$ $-I_O = 20\mu A$ $-I_O = 20\mu A$
V_{OH}	HIGH level output voltage standard outputs	3.98 5.48			3.84 5.34		3.7 5.2		V	4.5 6.0	V_{IH} or V_{IL}	$-I_O = 4.0mA$ $-I_O = 5.2mA$
V_{OH}	HIGH level output voltage bus driver outputs	3.98 5.48			3.84 5.34		3.7 5.2		V	4.5 6.0	V_{IH} or V_{IL}	$-I_O = 6.0mA$ $-I_O = 7.8mA$
V_{OL}	LOW level output voltage all outputs		0 0 0	0.1 0.1 0.1		0.1 0.1 0.1		0.1 0.1 0.1	V	2.0 4.5 6.0	V_{IH} or V_{IL}	$I_O = 20\mu A$ $I_O = 20\mu A$ $I_O = 20\mu A$
V_L	LOW level output voltage standard outputs			0.26 0.26		0.33 0.33		0.4 0.4	V	4.5 6.0	V_{IH} or V_{IL}	$I_O = 4.0mA$ $I_O = 5.2mA$
V_{OL}	LOW level output voltage bus driver outputs			0.26 0.26		0.33 0.33		0.4 0.4	V	4.5 6.0	V_{IH} or V_{IL}	$I_O = 6.0mA$ $I_O = 7.8mA$
$\pm I_I$	Input leakage current			0.1		1.0		1.0	μA	6.0	V_{CC} or GND	
$\pm I_S$	Analog switch OFF-state current per channel			0.1		1.0		1.0	μA	6.0	V_{IH} or V_{IL}	$\lvert V_S \rvert = V_{CC}$ (Note 1)
$\pm I_S$	Analog switch ON-state leakage current			0.2		2.0		2.0	μA	6.0	V_{IH} or V_{IL}	$\lvert V_S \rvert = V_{CC}$ (Note 1)
$\pm I_{OZ}$	3-state OFF-state current			0.5		5.0		10.0	μA	6.0	V_{IH} or V_{IL}	$V_O = V_{CC}$ or GND
I_{CC}	Quiescent supply current SSI flip-flops MSI			 2.0 4.0 8.0		 20.0 40.0 80.0		 40.0 80.0 160.0	 μA μA μA	 6.0 6.0 6.0	 V_{CC} or GND	 $I_O = 0$ $I_O = 0$ $I_O = 0$

Note

1. If applicable V_{EE} = GND.

High-Speed CMOS Family Characteristics

DC characteristics for 74HCU

Voltages are referenced to GND (ground = 0 V)

Symbol	Parameter	T_{amb} (°C)							Unit	Test Conditions		
		74HCU								V_{CC} V	V_I	Other
		+25			−40 to +85		−40 to +125					
		min.	typ.	max.	min.	max.	min.	max.				
V_{IH}	HIGH level input voltage	1.7 3.6 4.8			1.7 3.6 4.8		1.7 3.6 4.8		V	2.0 4.5 6.0		
V_{IL}	LOW level input voltage			0.5 1.35 1.8		0.5 1.35 1.8		0.5 1.35 1.8	V	2.0 4.5 6.0		
V_{OH}	HIGH level output voltage	1.8 4.0 5.5			1.8 4.0 5.5		1.8 4.0 5.5		V	2.0 4.5 6.0	V_{IH} or V_{IL}	$-I_O = 20\mu A$ $-I_O = 20\mu A$ $-I_O = 20\mu A$
V_{OH}	HIGH level output voltage	3.98 5.48			3.84 5.34		3.7 5.2		V	4.5 6.0	V_{IH} or V_{IL}	$-I_O = 4.0 mA$ $-I_O = 5.2 mA$
V_{OL}	LOW level output voltage			0.2 0.5 0.5		0.2 0.5 0.5		2.0 0.5 0.5	V	0.2 4.5 6.0	V_{IH} or V_{IL}	$I_O = 20\mu A$ $I_O = 20\mu A$ $I_O = 20\mu A$
V_{OL}	LOW level output voltage			0.26 0.26		0.33 0.33		0.4 0.4	V	4.5 6.0	V_{IH} or V_{IL}	$I_O = 4.0 mA$ $I_O = 5.2 mA$
$\pm I_I$	Input leakage current			0.1		1.0		1.0	µA	6.0	V_{CC} or GND	
I_{CC}	Quiescent supply current SSI			2.0		20.0		40.0	µA	6.0	V_{CC} or GND	$I_O = 0$

Ratings

Limiting values in accordance with the Absolute Maximum System (IEC 134)
Voltages are referenced to GND (ground = 0 V)

Symbol	Parameter	Min.	Max.	Unit	Conditions
V_{CC}	DC supply voltage	−0.5	+7	V	
$\pm I_{IK}$	DC input diode current		20	mA	for $V_I < -0.5 V$ or $V_I > +0.5 V$
$\pm I_{OK}$	DC output diode current		20	mA	for $V_O < -0.5 V$ or $V_O > +0.5 V$
$\pm I_O$	DC output source or sink current — standard outputs — bus driver outputs		 25 35	 mA mA	for $-0.5 V < V_O < V_{CC} + 0.5 V$
$\pm I_{CC}$; $\pm I_{GND}$	DC V_{CC} or GND current for types with: — standard outputs — bus driver outputs		 50 70	 mA mA	
T_{stg}	Storage temperature range	−65	+150	°C	
P_{tot}	Power dissipation plastic package		500	mW	for temperature range; −40 to +85°C; 74HC/HCT/HCU above +60°C: derate linearly with 8 mW/K
	Plastic mini-pack (SO)		400	mW	for temperature range; −40 to +85°C; 74HC/HCT/HCU above +60°C: derate linearly with 6 mW/K
P_{tot}	Power dissipation plastic package		500	mW	for temperature range; −40 to +125°C; 74HC/HCT/HCU above +70°C: derate linearly with 8 mW/K
	Plastic mini-pack (SO)		400	mW	for temperature range; −40 to +125°C; 74HC/HCT/HCU above +70°C: derate linearly with 6 mW/K

Notes

1. For analog switches (e.g., "4016", "4051" series, "4351" series, "4066" and "4067") 11 V is specified as the maximum operating voltage.

High-Speed CMOS Family Characteristics

Functional Range of 74HC and 74HCT Circuits

Number	Description	Pins
NAND/NOR Gates		
HC/HCT00	Quad 2-input NAND gate	14
HC/HCT02	Quad 2-input NOR gate	14
HC/HCT03	Quad 2-input NAND gate; open-drain	14
HC/HCT10	Triple 3-input NAND gate	14
HC/HCT20	Dual 4-input NAND gate	14
HC/HCT27	Triple 3-input NOR gate	14
HC/HCT30	8-input NAND gate	14
HC/HCT4002	Dual 4-input NOR gate	14
HC/HCT7266	Dual 4-input NAND gate	14
AND/OR/Exclusive-OR Gates		
HC/HCT08	Quad 2-input AND gate	14
HC/HCT11	Triple 3-input AND gate	14
HC/HCT21	Dual 4-input AND gate	14
HC/HCT32	Quad 2-input OR gate	14
HC58	Dual 4-input AND-OR gate	14
HC/HCT86	Quad 2-input EXCLUSIVE-OR gate	14
HC/HCT4075	Triple 3-input OR gate	14
Inverters/Buffers/Line Drivers/Level Shifters		
HC/HCT/HCU04	Hex inverter buffered/buffered/unbuffered	14
HC/HCT125*	Quad buffer/line driver; 3-state	14
HC/HCT126*	Quad buffer/line driver; 3-state	14
HC/HCT240*	Octal inverting buffer/line driver; 3-state	20
HC/HCT241*	Octal buffer/line driver; 3-state	20
HC/HCT244*	Octal buffer/line driver; 3-state	20
HC/HCT365*	Hex buffer/line driver with common enable; 3-state	16
HC/HCT366*	Hex inverting buffer/line driver with common enable; 3-state	16
HC/HCT367*	Hex buffer/line driver; 3-state	16
HC/HCT368*	Hex inverting buffer/line driver; 3-state	16
HC/HCT540*	Octal inverting buffer/line driver; 3-state	20
HC/HCT541*	Octal buffer/line driver; 3-state	20
HC4049	Hex inverting High-to-Low level shifter	16
HC4050	Hex High-to-Low level shifter	16
Flip-Flops/Latches/Registers		
HC/HCT73	Dual J-K flip-flop with reset; negative-edge trigger	14
HC/HCT74	Dual D-type flip-flop with set and reset; positive-edge trigger	14
HC/HCT75	Quad bistable transparent latch	16
HC/HCT107	Dual J-K flip-flop with reset; negative-edge trigger	14
HC/HCT109	Dual J-K flip-flop with set and reset; positive-edge trigger	16
HC/HCT112	Dual J-K flip-flop with set and reset; negative-edge trigger	16
HC/HCT173*	Quad D-type flip-flop; positive-edge trigger; 3-state	16
HC/HCT174	Hex D-type flip-flop with reset; positive-edge trigger	16
HC/HCT175	Quad D-type flip-flop with reset; positive-edge trigger	16
HC/HCT259	8-bit addressable latch	16
HC/HCT273	Octal D-type flip-flop with reset; positive-edge trigger	20
HC/HCT373*	Octal D-type transparent latch; 3-state	20
HC/HCT374*	Octal D-type flip-flop; positive-edge trigger; 3-state	20

Number	Description	Pins
Flip-Flops/Latches/Registers (Continued)		
HC/HCT377	Octal D-type flip-flop with data enable; positive-edge trigger	20
HC/HCT533*	Octal D-type transparent inverting latch; 3-state	20
HC/HCT534	Octal D-type inverting flip-flop; positive-edge trigger; 3-state	20
HC/HCT563	Octal D-type transparent inverting latch; 3-state	20
HC/HCT564*	Octal D-type inverting flip-flop; positive-edge trigger; 3-state	20
HC/HCT573*	Octal D-type transparent latch; 3-state	20
HC/HCT574*	Octal D-type flip-flop; positive-edge trigger; 3-state	20
HC/HCT670	4 × 4 register file; 3-state	16
HC/HCT7030	9-bit × 16 words expandable FIFO register	28
HC/HCT40105	4-bit × 16-word FIFO register	16
Shift Registers		
HC/HCT164	8-bit serial-in/parallel-out shift register	14
HC/HCT165	8-bit parallel-in/serial-out shift register	16
HC/HCT166	8-bit parallel-in/serial-out shift register	16
HC/HCT194	4-bit bidirectional universal shift register	16
HC/HCT195	4-bit parallel access shift register	16
HC/HCT299*	8-bit universal shift register; 3-state	20
HC/HCT597	8-bit register with input flip-flops	16
HC/HCT4015	Dual 4-bit serial-in/parallel-out shift register	16
HC/HCT4094	8-stage shift-and-store bus register	16
HC/HCT7597	8-bit register with input latches	16
HC/HCT40104*	4-bit bidirectional universal shift register; 3-state	16
Arithmetic Circuits		
HC/HCT85	4-bit magnitude comparator	16
HC/HCT181	4-bit arithmetic logic unit	24
HC/HCT182	Look-ahead carry generator	16
HC/HCT280	9-bit odd/even parity generator/checker	14
HC/HCT283	4-bit full adder with fast carry	16
HC/HCT583	4-bit full adder with fast carry	16
HC/HCT688	8-bit magnitude comparator	20
Counters		
HC/HCT93	4-stage binary ripple counter	14
HC/HCT160	Presettable synchronous BCD decade counter; asynchronous reset	16
HC/HCT161	Presettable synchronous 4-bit binary counter; asynchronous reset	16
HC/HCT162	Presettable synchronous BCD decade counter; synchronous reset	16
HC/HCT163	Presettable synchronous 4-bit decade counter; synchronous reset	16
HC/HCT190	Presettable synchronous BCD decade up/down counter	16
HC/HCT191	Presettable synchronous 4-bit binary up/down counter	16
HC/HCT192	Presettable synchronous BCD decade up/down counter	16
HC/HCT193	Presettable synchronous 4-bit binary up/down counter	16

High-Speed CMOS Family Characteristics

Number	Description	Pins
Counters (Continued)		
HC/HCT390	Dual decade ripple counter	16
HC/HCT393	Dual 4-bit binary ripple counter	14
HC/HCT4017	Johnson decade counter with 10 decoded outputs	16
HC/HCT4020	14-stage binary counter	16
HC/HCT4024	7-stage binary counter	14
HC/HCT4040	12-stage binary counter	16
HC/HCT4059	Programmable divide-by-N counter	24
HC/HCT4060	14-stage binary ripple counter with oscillator	16
HC/HCT4510	BCD up/down counter	16
HC/HCT4516	Binary up/down counter	16
HC/HCT4518	Dual synchronous BCD counter	16
HC/HCT4520	Dual 4-bit synchronous binary counter	16
HC/HCT40102	8-bit synchronous BCD down counter	16
HC/HCT40103	8-bit binary down counter	16
Multiplexers		
HC/HCT151	8-input multiplexer	16
HC/HCT153	Dual 4-input multiplexer	16
HC/HCT157	Quad 2-input multiplexer	16
HC/HCT158	Quad 2-input multiplexer; inverting	16
HC/HCT251	8-input multiplexer; 3-state	16
HC/HCT253*	Dual 4-input multiplexer; 3-state	16
HC/HCT257*	Quad 2-input multiplexer; 3-state	16
HC/HCT258	Quad 2-to-1 line data selector/multiplexer; 3-state	16
HC/HCT354*	8-input multiplexer/register with transparent data latch; 3-state	20
HC/HCT356*	8-input multiplexer/register; 3-state	20
Decoders/Encoders		
HC/HCT42	BCD-to-decimal decoder (1-to-10)	16
HC/HCT137	3-to-8 line decoder/demultiplexer with address latches	16
HC/HCT138	3-to-8 line decoder/demultiplexer	16
HC/HCT139	Dual 2-to-4 decoder/demultiplexer	16
HC/HCT147	10-to-4 line priority encoder	16
HC/HCT154	4-to-16 decoder/demultiplexer	24
HC/HCT237	3-to-8 line decoder/demultiplexer with address latches	16
HC/HCT238	3-to-8 line decoder/demultiplexer; true/inverting	16
HC/HCT4511	BCD-to-7-segment latch/decoder/driver	16
HC/HCT4514	4-to-16 line decoder/demultiplexer with input latches	24
HC/HCT4515	4-to-16 line decoder/demultiplexer with input latches	24
HC/HCT4543	BCD-to-7-segment latch/decoder/driver for LCDs	16

Number	Description	Pins
Switches		
HC/HCT4016	Quad bilateral switch	14
HC/HCT4051	8-channel analog multiplexer/demultiplexer	16
HC/HCT4052	Dual 4-channel analog multiplexer/demultiplexer	16
HC/HCT4053	Triple 2-channel analog multiplexer/demultiplexer	16
HC/HCT4066	Quad bilateral switch	14
HC/HCT4067	16-channel analog multiplexer/demultiplexer	24
HC/HCT4316	Quad bilateral switch	16
HC/HCT4351	8-channel analog multiplexer/demultiplexer with latch	20
HC/HCT4352	Dual 4-channel analog multiplexer/demultiplexer with latch	20
HC/HCT4353	Triple 2-channel analog multiplexer/demultiplexer with latch	20
Bus Transceivers		
HC/HCT242*	Quad inverting bus transceiver; 3-state	14
HC/HCT243*	Quad bus transceiver; 3-state	14
HC/HCT245*	Octal bus transceiver; 3-state	20
HC/HCT640*	Octal inverting bus transceiver; 3-state	20
HC/HCT643*	Octal true/inverting bus transceiver; 3-state	20
HC/HCT646*	Octal bus transceiver/register; 3-state	20
HC/HCT648*	Octal inverting bus transceiver/register; 3-state	24
Schmitt Triggers		
HC/HCT14	Hex inverting Schmitt trigger	14
HC/HCT132	Quad 2-input NAND Schmitt trigger	14
One-Shot Multivibrators		
HC/HCT123	Dual retriggerable monostable multivibrator with reset	16
HC/HCT221	Dual non-retriggerable monostable multivibrator with reset	16
HC/HCT423	Dual retriggerable monostable multivibrator with reset	16
HC/HCT4538	Dual retriggerable precision monostable multivibrator	14
Miscellaneous		
HC/HCT297	Digital phase-locked-loop filter	16
HC/HCT4046A	Phase-locked-loop with VCO	16
HC/HCT7046	Phase-locked-loop with lock detector	16

*Types with a bus driver output stage

Note: All parts are available or are planned in SO packages.

High-Speed CMOS Family Characteristics

What is HCMOS?

Manufacturing processes for such complex single-chip integrated circuits as microcomputers and large-capacity memories have been so refined that these circuits are now faster and/or less power-consuming than the CMOS and LSTTL circuits available to interconnect them. This anomaly severely restricts achievable overall system performance and highlights the vital importance of a continuing development program such as that at Signetics, to reduce the power consumption and increase the speed of logic circuit elements.

In the 1970's a self-aligning 6-micron (and, later, 4-micron) polycrystalline silicon-gate CMOS process was used with an isolated-oxide technique to manufacture the HE4000B family. These silicon-gate P-well CMOS circuits were nearly three times as fast as the then available metal-gate CMOS circuits, yet consumed only about 65% of the dynamic power.

For its new high-speed CMOS (HCMOS) family of logic integrated circuits, Signetics has used the same proven CMOS manufacturing facilities and process, but with tighter layout rules, a 3-micron gate structure, and thinner oxide in the gate region (figure 1). This enhancement of the CMOS process results in a further fivefold speed increase (figure 2) and

Figure 1 Comparison of HCMOS process with that of the HE4000B silicon-gate CMOS process

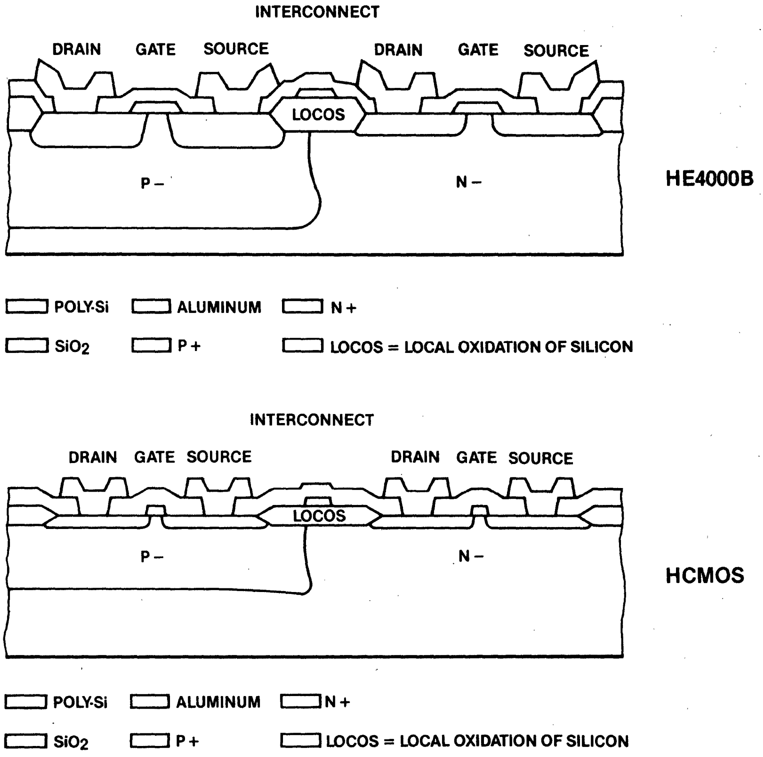
INTERCONNECT
DRAIN
GATE
SOURCE
DRAIN
GATE
SOURCE
LOCOS
P–
N–
HE4000B
POLY-Si
ALUMINUM
N+
SiO2
P+
LOCOS = LOCAL OXIDATION OF SILICON
INTERCONNECT
DRAIN
GATE
SOURCE
DRAIN
GATE
SOURCE
LOCOS
P–
N–
HCMOS
POLY-Si
ALUMINUM
N+
SiO2
P+
LOCOS = LOCAL OXIDATION OF SILICON

Figure 2 HCMOS gate propagation delay with a 50 pF load is 1/6th that of earlier silicon-gate CMOS and 1/12th that of metal-gate CMOS.

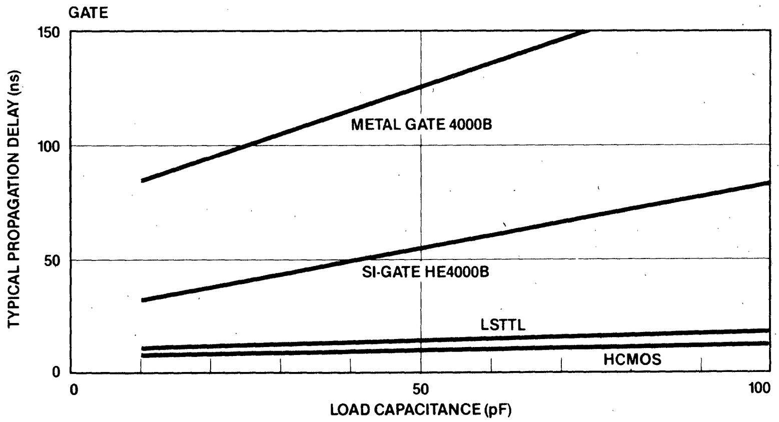

High-Speed CMOS Family Characteristics

a tenfold increase of drive capability without increasing power consumption (figure 3 and 4).

Among the outstanding features made possible by the HCMOS process are:

- Low power consumption
  - — Less than 0.5mW dc
  - — Typically 1mW at 1MHz ac
- LSTTL switching speed
  - — Typical propagation delay for gates: 10ns
  - — Typical propagation delay for latches: 15ns
  - — Typical propagation delay for flip-flops: 20ns
  - — Typical operating frequency (with V_{CC} at 4.5V and ambient temperature at 25°C): 60MHz
- Symmetrical output rise and fall times
- Symmetrical sourcing and sinking currents
- 30%-70% DC noise margin (HC-type parts)
- CMOS-compatible input switching levels (HC-type parts)
- LSTTL input switching levels (HCT-type parts)
- Standard outputs fan out to 10 LSTTL loads (4mA).
- Bus outputs fan out to 15 LSTTL loads (6mA).
- Wide range of operating supply voltages
  - — From 2V to 6V for HC-type parts
  - — 5V ± 10% for HCT-type parts
- Analog switches operating up to 10V
- Wide operating temperature range (−40°C to +85°C and −40°C to +125°C)
- Immunity to electrostatic discharge better than 2000V
- Latch-up free operation
- Available in plastic dual in-line or small outline (SMD) packages.
- Meets Jedec standard #7
- Alternate source to RCA.

Figure 3 **Comparison of typical HCMOS and LSTTL dynamic power dissipation as a function of frequency for a single gate**

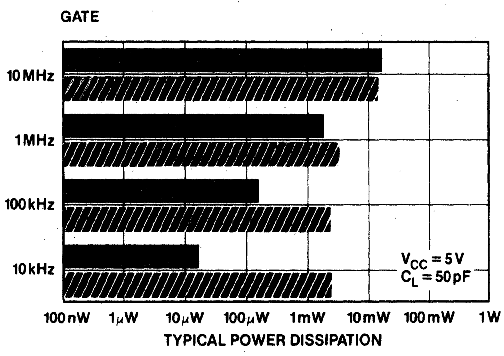

Figure 4 **Comparison of typical HCMOS and LSTTL dynamic power dissipation as a function of frequency for a single flip-flop**

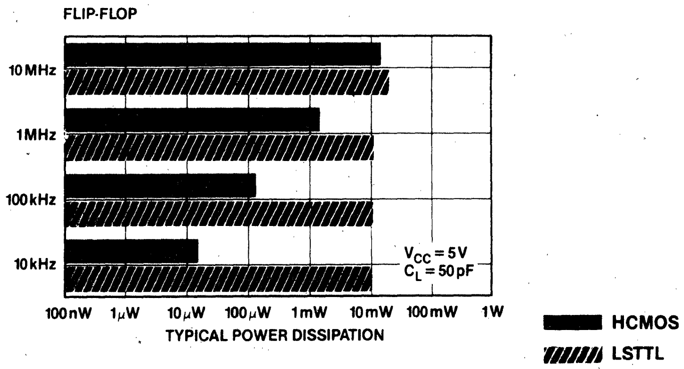

High-Speed CMOS Family Characteristics

The 74HC and 74HCT families

The 74HC and 74HCT families of HCMOS circuits have the low power consumption, high input noise immunity, and wide operating temperature range of earlier silicon-gate CMOS, combined with the high speed and drive capability previously attainable only with bipolar LSTTL. In new CMOS system designs, they eliminate the need to compromise between speed and power consumption and allow optimization of performance. In existing design, HCMOS circuits can directly replace some or all of the logic elements from other families, both CMOS and bipolar LSTTL, without interfacing problems. This can considerably reduce costs by simplifying power supply and cooling requirements, allowing higher packing density, increasing reliability, and extending the operating life of equipment.

The HCMOS family is comprised of 140 circuits, the majority of which are available in two versions.

Circuits of the 74HC type are fully buffered, with CMOS input switching levels for high noise immunity, typical gate operating current of 3μA at 10kHz, negligible quiescent supply and input current, and typical gate propagation delay of from 9ns to 11.5ns (with a capacitive load of from 15pF to 100pF); they operate from a supply of from 2V to 6V. The main role of the 74HC family is as faster CMOS replacements for new designs.

Circuits of the 74HCT type are also fully buffered, with the same features and functions as the 74HC types, but have TTL input switching levels, operate from a supply voltage 5V ± 10%, and are pin-compatible with most popular LSTTL circuits. Their main role is replacing LSTTL circuits to reduce power consumption without reducing speed.

An unbuffered inverter, the 74HCU04, is also available for implementing RC or crystal oscillators and other feedback circuits operating in the linear mode.

Type Number Designations

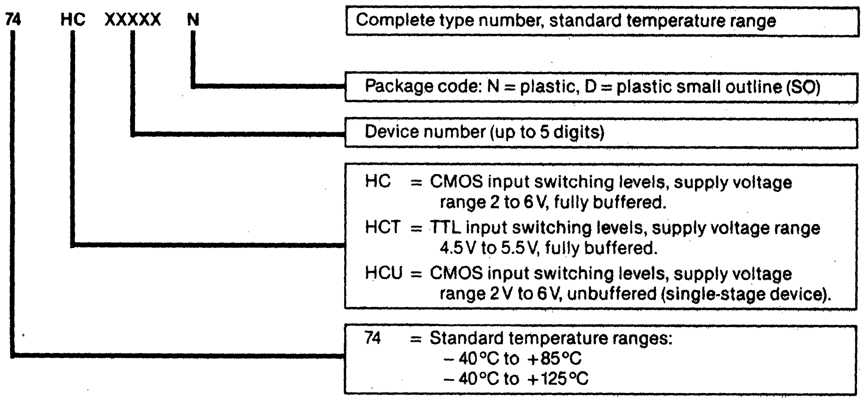

Complete type number, standard temperature range

Package code: N = plastic, D = plastic small outline (SO)

Device number (up to 5 digits)

HC = CMOS input switching levels, supply voltage range 2 to 6V, fully buffered.
HCT = TTL input switching levels, supply voltage range 4.5V to 5.5V, fully buffered.
HCU = CMOS input switching levels, supply voltage range 2V to 6V, unbuffered (single-stage device).

74 = Standard temperature ranges:
− 40°C to +85°C
− 40°C to +125°C

SIGNETICS HEADQUARTERS

811 East Arques Avenue
P.O. Box 3409
Sunnyvale, California 94088-3409
Phone: (408) 991-2000

ALABAMA
Huntsville
Phone: (205) 830-4001

ARIZONA
Phoenix
Phone: (602) 265-4444

CALIFORNIA
Canoga Park
Phone: (818) 340-1431

Irvine
Phone: (714) 833-8980
(213) 588-3281

Los Angeles
Phone: (213) 670-1101

San Diego
Phone: (619) 560-0242

Sunnyvale
Phone: (408) 991-3737

COLORADO
Aurora
Phone: (303) 751-5011

CONNECTICUT
Brookfield
Phone: (203) 775-6888

FLORIDA
Clearwater
Phone: (813) 796-7086

Ft. Lauderdale
Phone: (305) 486-6300

GEORGIA
Atlanta
Phone: (404) 953-0067

ILLINOIS
Itasca
Phone: (312) 250-0050

INDIANA
Kokomo
Phone: (317) 453-6462

KANSAS
Overland Park
Phone: (913) 469-4005

MARYLAND
Glen Burnie
Phone: (301) 787-0220

MASSACHUSETTS
Littleton
Phone: (617) 486-8411

MICHIGAN
Farmington Hills
Phone: (313) 476-1610

MINNESOTA
Edina
Phone: (612) 835-7455

NEW JERSEY
Parsippany
Phone: (201) 334-4405

NEW YORK
Hauppauge
Phone: (516) 348-7877

Liverpool
Phone: (315) 451-5470

Wappingers Falls
Phone: (914) 297-4074

NORTH CAROLINA
Cary
Phone: (919) 481-0400

OHIO
Worthington
Phone: (614) 888-7143

OREGON
Portland
Phone: (503) 297-5592

PENNSYLVANIA
Horsham
Phone: (215) 443-5500

TENNESSEE
Greeneville
Phone: (615) 639-0251

TEXAS
Austin
Phone: (512) 339-9944

Richardson
Phone: (214) 644-3500

CANADA
SIGNETICS CANADA, LTD.
Etobicoke, Ontario
Phone: (416) 626-6676

Nepean, Ontario
Signetics Canada, Ltd.
Phone: (613) 726-9576

REPRESENTATIVES

ARIZONA
Scottsdale
Thom Luke Sales, Inc.
Phone: (602) 941-1901

CALIFORNIA
Los Gatos
Magna Sales, Inc.
Phone: (408) 354-1626

Santa Clara
Magna Sales
Phone: (408) 727-8753

San Diego
Mesa Engineering
Phone: (619) 278-8021

CONNECTICUT
Brookfield
Kanan Associates
Phone: (203) 775-0494

FLORIDA
Pompano Beach
V/G Sales
Phone: (305) 971-0900

ILLINOIS
Hoffman Estates
Micro-Tex, Inc.
Phone: (312) 382-3001

IOWA
Marion
Rep. Associates Corp.
Phone: (319) 373-0152

KANSAS
Kansas City
B. C. Electronic Sales
Phone: (913) 342-1211

Wichita
B. C. Electronic Sales
Phone: (316) 722-0104

MARYLAND
Columbia
Delta III
Phone: (301) 730-4700

MASSACHUSETTS
Needham Heights
Kanan Associates
Phone: (617) 449-7400

MICHIGAN
Bloomfield Hills
Enco Marketing
Phone: (313) 642-0203

MINNESOTA
Eden Prairie
High Technology Sales
Phone: (612) 944-7274

MISSOURI
Bridgeton
B. C. Electronic Sales
Phone: (314) 291-1101

NEW JERSEY
East Hanover
Emtec Sales, Inc.
Phone: (201) 428-0600

NEW MEXICO
Albuquerque
F. P. Sales
Phone: (505) 345-5553

NEW YORK
Ithaca
Bob Dean, Inc.
Phone: (607) 257-1111

Melville
Emtec Sales, Inc.
Phone: (516) 752-1630

OHIO
Cincinnati
Stegman Blaine Marketing, Inc.
Phone: (513) 729-1969

Cleveland
Stegman Blaine Marketing, Inc.
Phone: (216) 331-4474

Vandalia
Stegman Blaine Marketing, Inc.
Phone: (513) 832-2488

OKLAHOMA
Tulsa
Jerry Robinson and Associates
Phone: (918) 665-3562

OREGON
Hillsboro
Western Technical Sales
Phone: (503) 640-4621

PENNSYLVANIA
Horsham
Delta Technical Sales Inc.
Phone: (215) 443-5503

Pittsburgh
Covert & Newman
Phone: (412) 531-2002

TEXAS
Houston
OM Sales
Phone: (713) 789-4426

UTAH
Salt Lake City
Electrodyne
Phone: (801) 486-3801

WASHINGTON
Bellevue
Western Technical Sales
Phone: (206) 641-3900

Spokane
Western Technical Sales
Phone: (509) 922-7600

WISCONSIN
Waukesha
Micro-Tex, Inc.
Phone: (414) 542-5352

CANADA
Nepean, Ontario
Tech-Trek, Ltd.
Phone: (613) 564-0049

Pointe Claire, Quebec
Tech-Trek, Ltd.
Phone: (514) 697-3385

Rexdale, Ontario
Tech-Trek, Ltd.
Phone: (416) 674-1717

Richmond, B.C.
Tech-Trek, Ltd.
Phone: (604) 271-3149

Winnipeg, Manitoba
Tech-Trek, Ltd.
Phone: (204) 222-1321

DISTRIBUTORS

ALABAMA
Huntsville
Hamilton/Avnet Electronics
Phone: (205) 837-7210
Schweber Electronics
Phone: (205) 882-2200

ARIZONA
Phoenix
Schweber Electronics
Phone: (602) 997-4874
Wyle LEMG
Phone: (602) 249-2232

Tempe
Arrow Electronics
Phone: (602) 968-4800
Hamilton/Avnet Electronics
Phone: (602) 231-5100

CALIFORNIA
Calabasas
Wyle LEMG
Phone: (818) 880-9000

Canoga Park
Schweber Electronics
Phone: (818) 999-4702

Chatsworth
Anthem Electronics
Phone: (818) 700-1000
Arrow Electronics
Phone: (818) 701-7500
Avnet Electronics
Phone: (818) 700-2600
Hamilton/Avnet Electronics
Phone: (818) 700-6500

Costa Mesa
Avnet Electronics
Phone: (714) 754-6111
Hamilton Electro Sales
Phone: (714) 641-4100

Culver City
Hamilton Electro Sales
Phone: (213) 558-2121

Garden Grove
Wyle LEMG Computer Products
Phone: (714) 891-1717

Gardena
Schweber Electronics
Phone: (213) 327-8409

Hayward
Arrow Electronics
Phone: (415) 487-4600

Irvine
Anthem Electronics
Phone: (714) 768-4444
Schweber Electronics
Phone: (714) 863-0200
Wyle LEMG
Phone: (714) 863-1611

Ontario
Hamilton/Avnet Electronics
Phone: (714) 989-4602

Rancho Cordova
Wyle LEMG
Phone: (916) 638-5282

Sacramento
Hamilton/Avnet Electronics
Phone: (916) 925-2216
Schweber Electronics
Phone: (916) 929-9732

San Diego
Anthem Electronics
Phone: (619) 453-4871
Arrow Electronics
Phone (619) 565-4800
Hamilton/Avnet Electronics
Phone: (619) 571-7510
Schweber Electronics
Phone: (619) 450-0454
Wyle LEMG
Phone: (619) 565-9171

San Jose
Anthem Electronics Inc.
Phone: (408) 946-8000
Schweber Electronics
Phone: (408) 946 7171

Santa Clara
Wyle LEMG
Phone: (408) 727-2500

Sunnyvale
Arrow Electronics
Phone: (408) 745-6600
Hamilton/Avnet Electronics
Phone: (408) 743-3355

Tustin
Arrow Electronics
Phone: (714) 838-5422

Woodland Hills
Avnet Electronics
Phone: (818) 700-2600

COLORADO
Aurora
Arrow Electronics
Phone (303) 696-1111

Denver
Wyle Distribution Group
Phone: (303) 457-9953

Englewood
Anthem Electronics
Phone: (303) 790-4500
Hamilton/Avnet Electronics
Phone: (303) 779-9998
Schweber Electronics
Phone: (303) 799-0258

Thornton
Wyle LEMG
Phone: (303) 457-9953

CONNECTICUT
Danbury
Hamilton/Avnet Electronics
Phone: (203) 797-2800
Schweber Electronics
Phone: (203) 748-7080

Meriden
Lionex Corp.
Phone: (203) 237-2282

Wallingford
Arrow Electronics
Phone: (203) 265-7741

FLORIDA
Altomont Springs
Schweber Electronics
Phone: (305) 331-7555

Deerfield Beach
Arrow Electronics
Phone: (305) 429-8200

Ft. Lauderdale
Hamilton/Avnet Electronics
Phone: (305) 971-2900

Hollywood
Schweber Electronics
Phone: (305) 927-0511

Palm Bay
Arrow Electronics
Phone: (305) 725-1480

St. Petersburg
Hamilton/Avnet Electronics
Phone: (813) 576-3930

Winter Park
Hamilton/Avnet Electronics
Phone: (305) 628-3888

GEORGIA
Norcross
Arrow Electronics
Phone: (404) 449-8252
Hamilton/Avnet Electronics
Phone: (404) 447-7507
Schweber Electronics
Phone: (404) 449-9170

ILLINOIS
Elk Grove
Schweber Electronics
Phone: (312) 364-3750

Schaumburg
Arrow Electronics
Phone: (312) 397-3440

Bensenville
Hamilton/Avnet Electronics
Phone: (312) 860-7700

INDIANA
Carmel
Hamilton/Avnet Electronics
Phone: (317) 844-9333

Indianapolis
Arrow Electronics
Phone: (317) 243-9353

IOWA
Cedar Rapids
Hamilton/Avnet Electronics
Phone: (319) 362-4757
Schweber Electronics
Phone: (319) 373-1417

KANSAS
Overland Park
Hamilton/Avnet Electronics
Phone: (913) 888-8900
Schweber Electronics
Phone: (913) 492-2921

MARYLAND
Columbia
Arrow Electronics
Phone: (301) 995-0003
Hamilton/Avnet Electronics
Phone: (301) 995-3500
Lionex Corp.
Phone: (301) 964-0040

Gaithersburg
Schweber Electronics
Phone: (301) 840-5900

MASSACHUSETTS
Wilmington
Lionex Corp.
Phone: (617) 657-5170
Schweber Electronics
Phone: (617) 275-5100

Woburn
Arrow Electronics
Phone: (617) 933-8130
Hamilton/Avnet Electronics
Phone: (617) 273-7500

MICHIGAN
Ann Arbor
Arrow Electronics
Phone: (313) 971-8220

Grand Rapids
Hamilton/Avnet Electronics
Phone: (616) 243-8805

Livonia
Hamilton/Avnet Electronics
Phone: (313) 522-4700
Schweber Electronics
Phone: (313) 525-8100

MINNESOTA
Edina
Arrow Electronics
Phone: (612) 830-1800
Schweber Electronics
Phone: (612) 941-5280

Minnetonka
Hamilton/Avnet Electronics
Phone: (612) 932-0600

MISSOURI
Earth City
Hamilton/Avnet Electronics
Phone: (314) 344-1200
Schweber Electronics
Phone: (314) 739-0526

St. Louis
Arrow Electronics
Phone: (314) 567-6888

NEW HAMPSHIRE
Manchester
Arrow Electronics
Phone: (603) 668-6968
Hamilton/Avnet Electronics
Phone: (603) 624-9400
Schweber Electronics
Phone: (603) 625-2250

NEW JERSEY
Cherry Hill
Hamilton/Avnet Electronics
Phone: (609) 424-0100

Fairfield
Arrow Electronics
Phone: (201) 575-5300
Hamilton/Avnet Electronics
Phone: (201) 575-3390
Lionex Corporation
Phone: (201) 227-7960
Schweber Electronics
Phone: (201) 227-7880

Marlton
Arrow Electronics
Phone: (609) 596-8000

NEW MEXICO
Albuquerque
Hamilton/Avnet Electronics
Phone: (505) 765-1500
Arrow Electronics
Phone: (505) 243-4566

NEW YORK
Buffalo
Summit Distributors
Phone: (716) 887-2800

East Syracuse
Hamilton/Avnet Electronics
Phone: (315) 437-2641

Hauppauge, L.I.
Arrow Electronics
Phone: (516) 231-1000
Hamilton/Avnet Electronics
Phone: (516) 231-9800
Lionex Corp.
Phone: (516) 273-1660

Liverpool
Arrow Electronics
Phone: (315) 652-1000

Rochester
Arrow Electronics
Phone: (716) 427-0300
Hamilton/Avnet Electronics
Phone: (716) 475-9130
Schweber Electronics
Phone: (716) 424-2222

Westbury, L.I.
Schweber Electronics
Phone: (516) 334-7474

NORTH CAROLINA
Raleigh
Arrow Electronics
Phone: (919) 876-3132
Hamilton/Avnet Electronics
Phone: (919) 878-0810
Schweber Electronics
Phone: (919) 876-0000

OHIO
Beechwood
Schweber Electronics
Phone: (216) 464-2970

Centerville
Arrow Electronics
Phone: (513) 435-5563

Cleveland
Hamilton/Avnet Electronics
Phone: (216) 831-3500

Dayton
Hamilton/Avnet Electronics
Phone: (513) 439-6700
Schweber Electronics
Phone: (513) 439-1800

Solon
Arrow Electronics
Phone: (216) 248-3990

Westerville
Hamilton/Avnet Electronics
Phone: (614) 882-7004

OKLAHOMA
Tulsa
Quality Components
Phone: (918) 664-8812
Schweber Electronics
Phone: (918) 622-8000

OREGON
Hillsboro
Wyle LEMG
Phone: (503) 640-6000

Lake Oswego
Anthem Electronics
Phone: (503) 684-2661
Hamilton/Avnet Electronics
Phone: (503) 635-8831

Tigard
Arrow Electronics
Phone: (503) 684-1690

PENNSYLVANIA
Horsham
Lionex Corp.
Phone: (215) 443-5150
Schweber Electronics
Phone: (215) 441-0600

Monroeville
Arrow Electronics
Phone: (412) 856-7000

Pittsburgh
Hamilton/Avnet Electronics
Phone: (412) 281-4150
Schweber Electronics
Phone: (412) 782-1600

TEXAS
Addison
Quality Components
Phone: (214) 733-4300

Austin
Arrow Electronics
Phone: (512) 835-4180
Hamilton/Avnet Electronics
Phone: (512) 837-8911
Quality Components
Phone: (512) 835-0220
Wyle LEMG
Phone: (512) 834-9957
Schweber Electronics
Phone: (512) 458-8253

Carrolton
Arrow Electronics
Phone: (214) 380-6464

Dallas
Schweber Electronics
Phone: (214) 661-5010

Houston
Arrow Electronics
Phone: (713) 530-4700
Hamilton/Avnet Electronics
Phone: (713) 780-1771
Schweber Electronics
Phone: (713) 784-3600
Wyle LEMG
Phone: (713) 879-9953

Irving
Hamilton/Avnet Electronics
Phone: (214) 659-4111

Richardson
Wyle LEMG
Phone: (214) 235-9953

Sugar Land
Quality Components
Phone: (713) 240-2255

UTAH
Salt Lake City
Anthem Electronics
Phone: (801) 973-8555
Arrow Electronics
Phone: (801) 972-0404
Hamilton/Avnet Electronics
Phone: (801) 972-2800
Wyle LEMG
Phone: (801) 974-9953

WASHINGTON
Bellevue
Arrow Electronics
Phone: (206) 643-4800
Hamilton/Avnet Electronics
Phone: (206) 453-5844
Wyle LEMG
Phone: (206) 453-8300

Redmond
Anthem Electronics
Phone: (206) 881-0850

WISCONSIN
Brookfield
Schweber Electronics
Phone: (414) 784-9020

New Berlin
Hamilton/Avnet Electronics
Phone: (414) 784-4510

Oak Creek
Arrow Electronics
Phone: (414) 764-6600

CANADA
Brampton, Ontario
Zentronics, Ltd.
Phone: (416) 451-9600

Burnaby, Vancouver
Hamilton/Avnet Electronics
Phone: (604) 272-4242

Calgary, Alberta
Hamilton/Avnet Electronics
Phone: (403) 230-3586
Zentronics, Ltd.
Phone: (403) 272-1021

Downsview, Ontario
Arrow/Cesco
Phone: (416) 661-0220

Mississauga, Ontario
Hamilton/Avnet Electronics
Phone: (416) 677-7432

Montreal, Quebec
Arrow/Cesco
Phone: (514) 735-5511
Zentronics, Ltd.
Phone: (514) 735-5361

Nepean, Ontario
Arrow/Cesco
Phone: (613) 226-6903
Hamilton/Avnet Electronics
Phone: (613) 226-1700
Zentronics, Ltd.
Phone: (613) 226-8840

Quebec, Quebec
Arrow/Cesco
Phone: (418) 687-4231

Richmond, B.C.
Zentronics, Ltd.
Phone: (604) 273-5575

Ville St. Laurent, Quebec
Hamilton/Avnet Electronics
Phone: (514) 335-1000
Zentronics, Ltd.
Phone: (514) 735-5361

Waterloo
Zentronics, Ltd.
Phone: (519) 884-5700

Winnipeg
Zentronics, Ltd.
Phone: (204) 775-8661

FOR SIGNETICS PRODUCTS WORLDWIDE:

ARGENTINA
Philips Argentina S.A.
Buenos Aires
Phone: (1) 652-3983

AUSTRALIA
Philips Industries Holdings Ltd.
Artarmon, N.S.W.
Phone: (2) 439-3322

AUSTRIA
Osterrichische Philips Bauelemente
Wien
Phone: 43-222-93-26-2

BELGIUM
N. V. Philips & MBLE
Bruxelles
Phone: 32-02-242-7400

BRAZIL
Ibrape
Sao Paulo
Phone: (11) 211-2600

CHILE
Philips Chilena S.A.
Santiago
Phone: (2) 39-4001

DENMARK
Miniwatt A/S
Kobenhavn N.V.
Phone: 45-01-69-1622

FINLAND
Oy Philips Ab
Helsinki
Phone: 358-1-7271

FRANCE
R.T.C. La Radiotechnique-Compelec
Paris
Phone: 33.1.338.8000

GERMANY
Valvo
Hamburg
Phone: 49-40-3296-19

GREECE
Philips S.A. Hellenique
Athens
Phone: 9215111

HONG KONG
Philips Hong Kong, Ltd.
Kwai Chung
Phone: (0) 245121

INDIA
Philips India & Elect. Ltd.
Bombay
Phone: (22) 212628

INDONESIA
P.T. Philips-Ralin Electronics
Jakarta
Phone: (21) 512572

IRELAND
Philips Electrical Ltd.
Dublin
Phone: 353-1-69-3355

ISRAEL
Rapac Electronics, Ltd.
Tel Aviv
Phone: (3) 477115

ITALY
Philips S.p.A.
Milano
Phone: 39-2-6994

JAPAN
Signetics Japan, Ltd.
Tokyo
Phone: 813-230-1521
Osaka
Phone: 816-304-6171

KOREA
Philips Industries (Korea) Ltd.
Seoul
Phone: (2) 794-5011

MEXICO
Electronica S.A. de C.V.
Mexico D.F.
Phone: (721) 61300

NETHERLANDS
Philips Nederland B.V.
Eindhoven
Phone: 31-40-79-3333

NEW ZEALAND
Philips Electrical Ind. Ltd.
Auckland
Phone: (9) 605914

NORWAY
Norsk A/S Philips
Oslo
Phone: 47-2-680200

PERU
Cadesa
Lima
Phone: (14) 319253

PHILIPPINES
Philips Industrial Dev., Inc.
Makati-Rizal
Phone: (2) 868951

PORTUGAL
Philips Portuguesa SARL
Lisboa
Phone: 351-19-68-3121

SINGAPORE
Philips Project Dev. Pte., Ltd.
Singapore
Phone: 350-2538

SOUTH AFRICA
E.D.A.C. (PTY), Ltd.
Joubert Park
Phone: (11) 401-4600

SPAIN
Miniwatt S.A.
Barcelona
Phone: 301 63 12

SWEDEN
A.B. Elcoma
Stockholm
Phone: 46-08-67-9780

SWITZERLAND
Philips A.G.
Zurich
Phone: 41-01-988-2211

TAIWAN
Philips Taiwan, Ltd.
Taipei
Phone: (2) 712-0500

THAILAND
Philips Electrical Co.
of Thailand Ltd.
Bangkok
Phone: 233-6330-9

TURKEY
Turk Philips
Ticaret A.S.
Istanbul
Phone: 43 59 10

UNITED KINGDOM
Mullard, Ltd.
London
Phone: 44-01-580-6633

UNITED STATES
Signetics International Corp.
Sunnyvale, California
Phone: (408) 739-7700

Printed in U.S.A. Ocotober 1, 1985

PRODUCT PREVIEW

SN54ALS232, SN74ALS232
16 × 4 ASYNCHRONOUS FIRST-IN FIRST-OUT MEMORIES

- **Independent Asynchronous Inputs and Outputs**
- **16 Words by 4 Bits Each**
- **Data Rates From 0 to 25 MHz**
- **Fall-Through Time . . . 24 ns Typ**
- **3-State Outputs**

SN54ALS232 . . . J PACKAGE
SN74ALS232 . . . D OR N PACKAGE
(TOP VIEW)

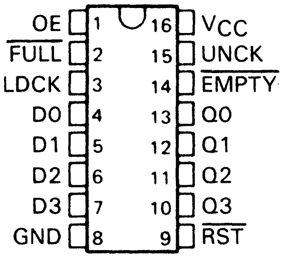

SN54ALS232 . . . FK PACKAGE
SN74ALS232 . . . FN PACKAGE
(TOP VIEW)

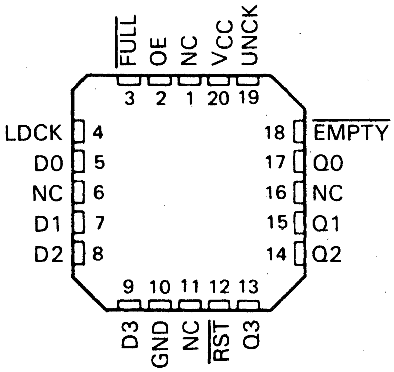

NC—No internal connection.

description

These 64-bit memories use Advanced Low-Power Schottky technology and feature high speed and fast fall-through times. They are organized as 16 words by 4 bits each.

A FIFO memory is a storage device that allows data to be written into and read from its array at independent data rates. These FIFOs are designed to process data at rates from 0 to 25 megahertz in a bit-parallel format, word by word.

Data is written into memory on a low-to-high transition at the load clock input (LDCK) and is read out on a low-to-high transition at the unload clock input (UNCK). The memory is full when the number of words clocked in exceeds by 16 the number of words clocked out. When the memory is full, LDCK signals have no effect on the data residing in memory. When the memory is empty, UNCK signals have no effect.

Status of the FIFO memory is monitored by the $\overline{\mathrm{FULL}}$ and $\overline{\mathrm{EMPTY}}$ output flags. The $\overline{\mathrm{FULL}}$ output will be low when the memory is full, and high when the memory is not full. The $\overline{\mathrm{EMPTY}}$ output will be low when the memory is empty, and high when it is not empty.

A low level on the reset input ($\overline{\mathrm{RST}}$) resets the internal stack control pointers and also sets $\overline{\mathrm{EMPTY}}$ low and sets $\overline{\mathrm{FULL}}$ high. The outputs are not reset to any specific logic levels. The first low-to-high transition on LDCK, either after a $\overline{\mathrm{RST}}$ pulse or from an empty condition, will cause $\overline{\mathrm{EMPTY}}$ to go high and the data to appear on the Q outputs. It is important to note that the first word does not have to be unloaded. Data outputs are noninverting with respect to the data inputs and are at high impedance when the output-enable input (OE) is low. OE does not affect either the $\overline{\mathrm{FULL}}$ or $\overline{\mathrm{EMPTY}}$ output flags. Cascading is easily accomplished in the word-width direction, but is not possible in the word-depth direction.

PRODUCT PREVIEW documents contain information on products in the formative or design phase of development. Characteristic data and other specifications are design goals. Texas Instruments reserves the right to change or discontinue these products without notice.

TEXAS INSTRUMENTS
POST OFFICE BOX 225012 • DALLAS, TEXAS 75265

Copyright © 1984, Texas Instruments Incorporated

logic symbol†

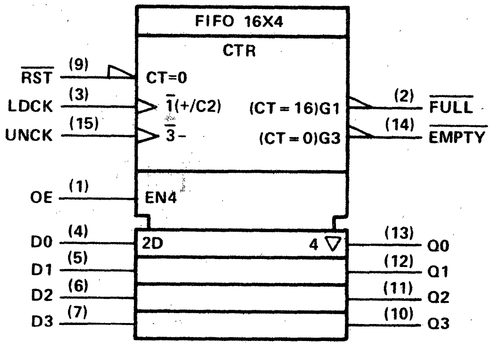
FIFO 16X4
CTR
RST (9)
CT=0
LDCK (3)
1(+/C2)
UNCK (15)
3−
(CT=16)G1
(CT=0)G3
(2) FULL
(14) EMPTY
OE (1)
EN4
D0 (4)
D1 (5)
D2 (6)
D3 (7)
2D
4 ▽
(13) Q0
(12) Q1
(11) Q2
(10) Q3

†This symbol is in accordance with ANSI/IEEE Standard 91-1984 and IEC Publication 617-12. The symbol is functionally accurate but does not show the details of implementation; for these, see the logic diagram. The symbol represents the memory as if it were controlled by a single counter whose content is the number of words stored at the time. Output data is invalid when the counter content (CT) is 0.

logic diagram (positive logic)

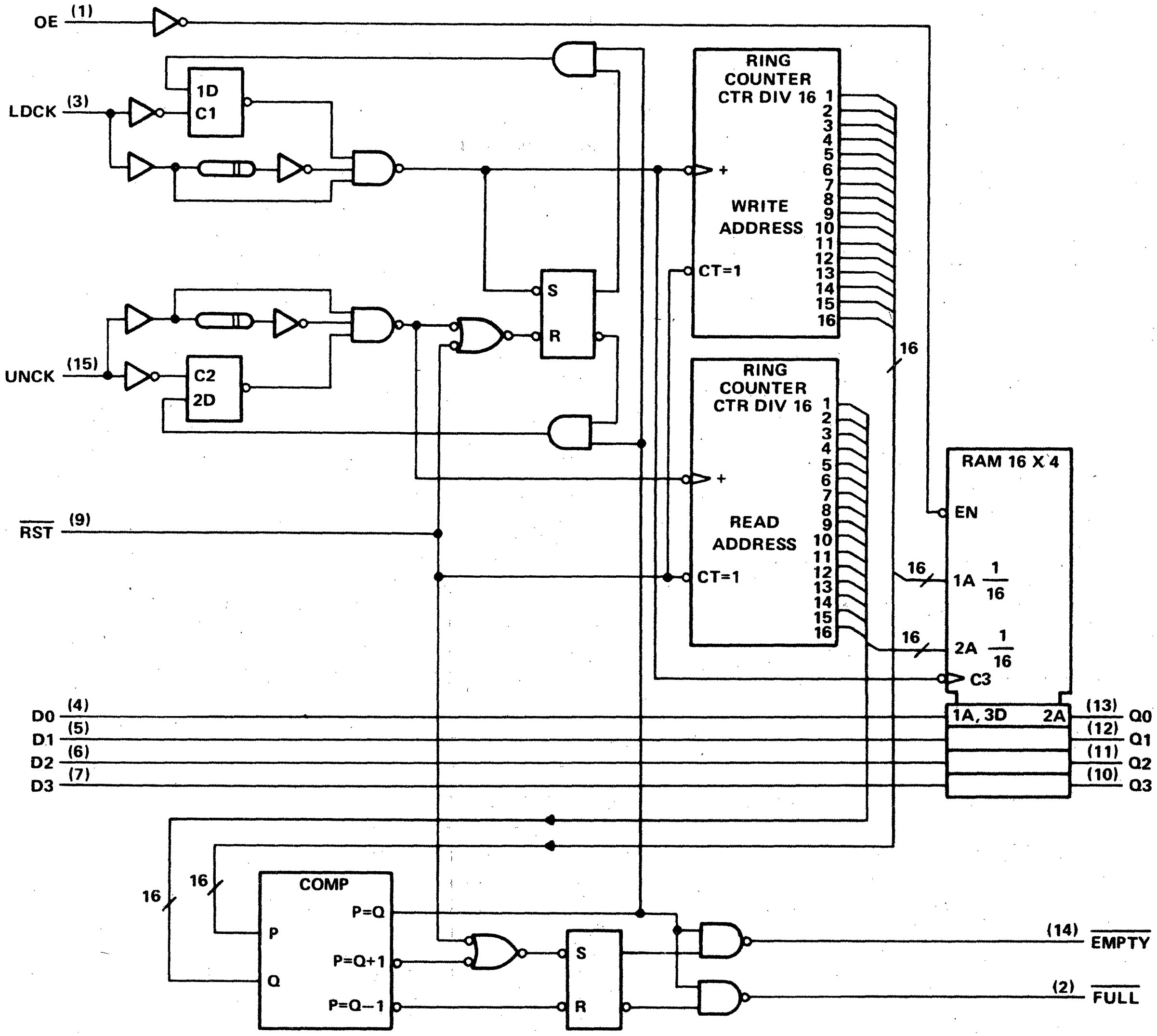
OE (1)
LDCK (3)
1D
C1
UNCK (15)
C2
2D
RST (9)
S
R
RING COUNTER CTR DIV 16
WRITE ADDRESS
CT=1
RING COUNTER CTR DIV 16
READ ADDRESS
CT=1
16
RAM 16 X 4
EN
1A 1/16
2A 1/16
C3
1A, 3D
2A
D0 (4)
D1 (5)
D2 (6)
D3 (7)
(13) Q0
(12) Q1
(11) Q2
(10) Q3
COMP
P
Q
P=Q
P=Q+1
P=Q−1
(14) EMPTY
(2) FULL

Pin numbers shown are for D, J, and N packages.

timing diagram

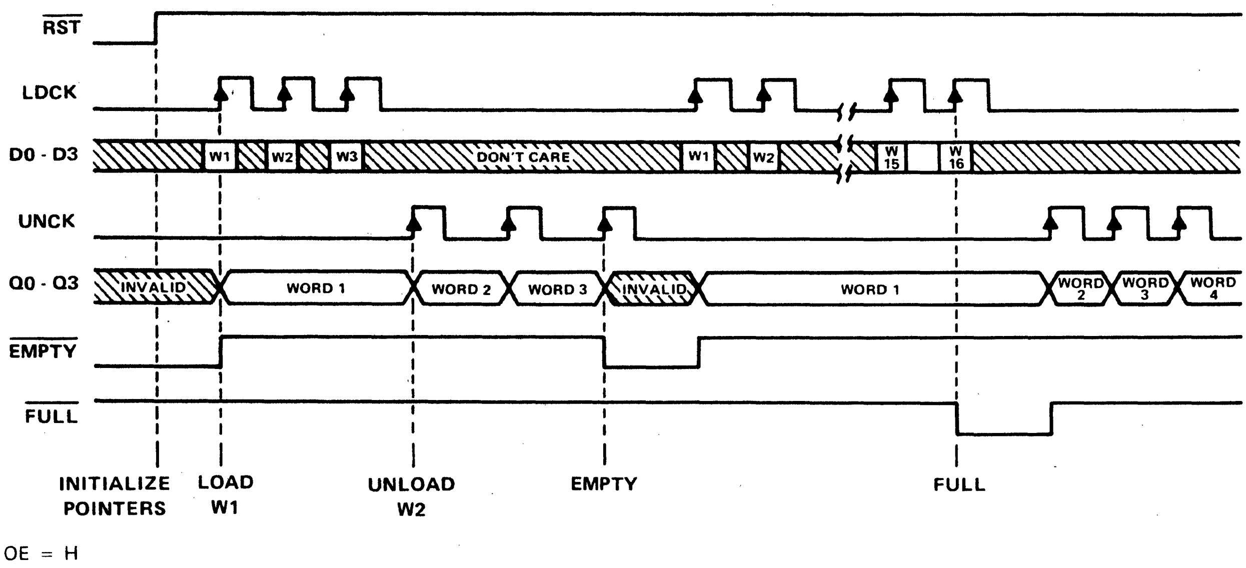
RST
LDCK
D0 - D3
W1
W2
W3
DON'T CARE
W1
W2
W 15
W 16
UNCK
Q0 - Q3
INVALID
WORD 1
WORD 2
WORD 3
INVALID
WORD 1
WORD 2
WORD 3
WORD 4
EMPTY
FULL
INITIALIZE POINTERS
LOAD W1
UNLOAD W2
EMPTY
FULL

OE = H

absolute maximum ratings over operating free-air temperature (unless otherwise noted)

Supply voltage, V_{CC}		7 V
Input voltage		7 V
Voltage applied to a disabled 3-state output		5.5 V
Operating free-air temperature range:	SN54ALS232	−55°C to 125°C
	SN74ALS232	0°C to 70°C
Storage temperature range		−65°C to 150°C

recommended operating conditions

			SN54ALS232			SN74ALS232			UNIT
			MIN	NOM	MAX	MIN	NOM	MAX	
V_{CC}	Supply voltage		4.5	5	5.5	4.5	5	5.5	V
V_{IH}	High-level input voltage		2			2			V
V_{IL}	Low-level input voltage				0.8			0.8	V
I_{OH}	High-level output current	Q outputs			−1			−1.6	mA
		FULL, EMPTY			−0.4			−0.4	
I_{OL}	Low-level output current	Q outputs			12			24	mA
		FULL, EMPTY			4			8	
f_{clock}	Clock frequency	LDCK	0		25	0		25	MHz
		UNCK	0		25	0		25	
t_w	Pulse duration	RST low							ns
		LDCK low							
		LDCK high							
		UNCK low							
		UNCK high							
t_{su}	Setup time	Data before LDCK↑							ns
		RST (inactive) before LDCK↑							
t_h	Hold time	Data after LDCK↑							ns
T_A	Operating free-air temperature		−55		125	0		70	°C

TEXAS INSTRUMENTS
POST OFFICE BOX 225012 • DALLAS, TEXAS 75265

electrical characteristics over recommended operating free-air temperature range (unless otherwise noted)

PARAMETER		TEST CONDITIONS		SN54ALS232 MIN	SN54ALS232 TYP†	SN54ALS232 MAX	SN74ALS232 MIN	SN74ALS232 TYP†	SN74ALS232 MAX	UNIT
V_{IK}		V_{CC} = 4.5 V,	I_I = −18 mA			−1.5			−1.5	V
V_{OH}	$\overline{\text{FULL}}$, $\overline{\text{EMPTY}}$	V_{CC} = 4.5 V to 5.5 V,	I_{OH} = −0.4 mA	$V_{CC}-2$			$V_{CC}-2$			V
	Q outputs	V_{CC} = 4.5 V,	I_{OH} = −1 mA	2.4	3.3					
		V_{CC} = 4.5 V,	I_{OH} = −2.6 mA				2.4	3.2		
V_{OL}	Q outputs	V_{CC} = 4.5 V,	I_{OL} = 12 mA		0.25	0.4		0.25	0.4	V
		V_{CC} = 4.5 V,	I_{OL} = 24 mA					0.35	0.5	
	$\overline{\text{FULL}}$, $\overline{\text{EMPTY}}$	V_{CC} = 4.5 V,	I_{OH} = 4 mA		0.25	0.4		0.25	0.4	
		V_{CC} = 4.5 V,	I_{OL} = 8 mA					0.35	0.5	
I_{OZH}		V_{CC} = 5.5 V,	V_O = 2.7 V			20			20	μA
I_{OZL}		V_{CC} = 5.5 V,	V_O = 0.4 V			−20			−20	μA
I_I		V_{CC} = 5.5 V,	V_I = 7 V			0.1			0.1	mA
I_{IH}		V_{CC} = 5.5 V,	V_I = 2.7 V			20			20	μA
I_{IL}		V_{CC} = 5.5 V,	V_I = 0.4 V			−0.2			−0.2	mA
I_O‡		V_{CC} = 5.5 V,	V_O = 2.25 V	−30		−112	−30		−112	mA
I_{CC}		V_{CC} = 5.5 V,	Outputs high							mA
			Outputs low							
			Outputs disabled							

† All typical values are at V_{CC} = 5 V, T_A = 25°C.

‡ The output conditions have been chosen to produce a current that closely approximates one half of the true short-circuit output current, I_{OS}.

switching characteristics (see Note 1)

PARAMETER	FROM (INPUT)	TO (OUTPUT)	V_{CC} = 4.5 V to 5.5 V, C_L = 50 pF, R1 = 500 Ω, RE = 500 Ω, T_A = MIN to MAX						UNIT
			SN54ALS232			SN74ALS232			
			MIN	TYP†	MAX	MIN	TYP†	MAX	
f_{max}	LDCK		25			25			MHz
	UNCK		25			25			
t_{pd}	LDCK↑	Any Q		24			24		ns
t_{pd}	UNCK↑	Any Q		20			20		ns
t_{PLH}	LDCK↑	$\overline{\text{EMPTY}}$		15			15		ns
t_{PHL}	UNCK↑	$\overline{\text{EMPTY}}$		18			18		ns
t_{PHL}	$\overline{\text{RST}}$↓	$\overline{\text{EMPTY}}$		15			15		ns
t_{PHL}	LDCK↑	$\overline{\text{FULL}}$		18			18		ns
t_{PLH}	UNCK↑	$\overline{\text{FULL}}$		15			15		ns
t_{PLH}	$\overline{\text{RST}}$↓	$\overline{\text{FULL}}$		20			20		ns
t_{en}	OE↑	Q		12			12		ns
t_{dis}	OE↓	Q		9			9		ns

† All typical values are at V_{CC} = 5 V, T_A = 25°C.

NOTE 1: Load circuit and voltage waveforms are shown in Section 1.

PRODUCT PREVIEW

SN54ALS233, SN74ALS233
16 × 5 ASYNCHRONOUS FIRST-IN FIRST-OUT MEMORIES

D2876, AUGUST 1985

- **Independent Asychronous Inputs and Outputs**
- **16 Words by 5 Bits Each**
- **Data Rates from 0 to 25 MHz**
- **Fall-Through Time . . . 24 ns Typ**
- **3-State Outputs**

SN54ALS233 . . . J PACKAGE
SN74ALS233 . . . DW OR N PACKAGE
(TOP VIEW)

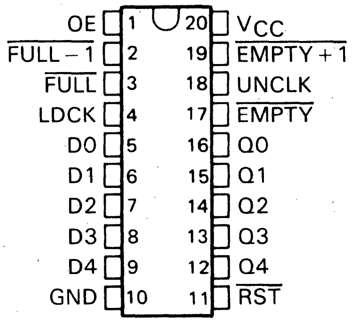
OE 1
$\overline{\text{FULL}-1}$ 2
$\overline{\text{FULL}}$ 3
LDCK 4
D0 5
D1 6
D2 7
D3 8
D4 9
GND 10
20 V_{CC}
19 $\overline{\text{EMPTY}+1}$
18 UNCLK
17 $\overline{\text{EMPTY}}$
16 Q0
15 Q1
14 Q2
13 Q3
12 Q4
11 $\overline{\text{RST}}$

SN54ALS233 . . . FK PACKAGE
SN74ALS233 . . . FN PACKAGE
(TOP VIEW)

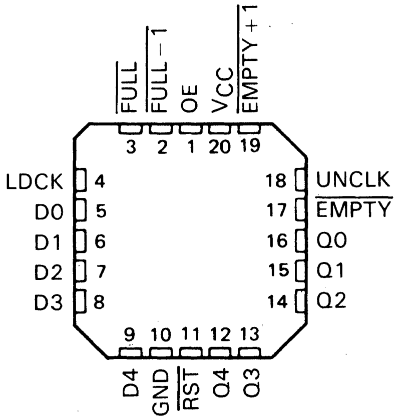
$\overline{\text{FULL}}$
$\overline{\text{FULL}-1}$
OE
VCC
$\overline{\text{EMPTY}+1}$
3 2 1 20 19
LDCK 4
D0 5
D1 6
D2 7
D3 8
18 UNCLK
17 $\overline{\text{EMPTY}}$
16 Q0
15 Q1
14 Q2
9 10 11 12 13
D4
GND
$\overline{\text{RST}}$
Q4
Q3

description

These 64-bit memories utilize Advanced Low-Power Schottky technology and feature high speed and fast fall-through times. They are organized as 16 words by 5 bits each.

A FIFO memory is a storage device that allows data to be written into and read from its array at independent data rates. These FIFOs are designed to process data at rates from 0 to 25 megahertz in a bit-parallel format, word by word.

Data is written into memory on a low-to-high transition at the load clock input (LDCK) and is read out on a low-to-high transition at the unload clock input (UNCK). The memory is full when the number of words clocked in exceeds by 16 the number of words clocked out. When the memory is full, LDCK signals will have no effect. When the memory is empty, UNCK signals have no effect.

Status of the FIFO memory is monitored by the $\overline{\text{FULL}}$, $\overline{\text{EMPTY}}$, $\overline{\text{FULL}-1}$, and $\overline{\text{EMPTY}+1}$ output flags. The FULL output will be low whenever the memory is full, and high whenever not full. The $\overline{\text{FULL}-1}$ output will be low whenever the memory contains 15 data words. The $\overline{\text{EMPTY}}$ output will be low whenever the memory is empty, and high whenever it is not empty. The $\overline{\text{EMPTY}+1}$ output will be low whenever one word remains in memory.

A low level on the reset input ($\overline{\text{RST}}$) resets the internal stack control pointers and also sets $\overline{\text{EMPTY}}$ low and sets $\overline{\text{FULL}}$, $\overline{\text{FULL}-1}$, and $\overline{\text{EMPTY}+1}$ high. The Q outputs are not reset to any specific logic level. The first low-to-high transition on LDCK, after either a $\overline{\text{RST}}$ pulse or from an empty condition, will cause $\overline{\text{EMPTY}}$ to go high and the data to appear on the Q outputs. It is important to note that the first word does not have to be unloaded. Data outputs are noninverting with respect to the data inputs and are at high impedance when the output enable input (OE) is low. OE does not affect the output flags. Cascading is easily accomplished in the word-width direction, but is not possible in the word-depth direction.

PRODUCT PREVIEW documents contain information on products in the formative or design phase of development. Characteristic data and other specifications are design goals. Texas Instruments reserves the right to change or discontinue these products without notice.

TEXAS INSTRUMENTS
POST OFFICE BOX 225012 • DALLAS, TEXAS 75265

logic diagram (positive logic)

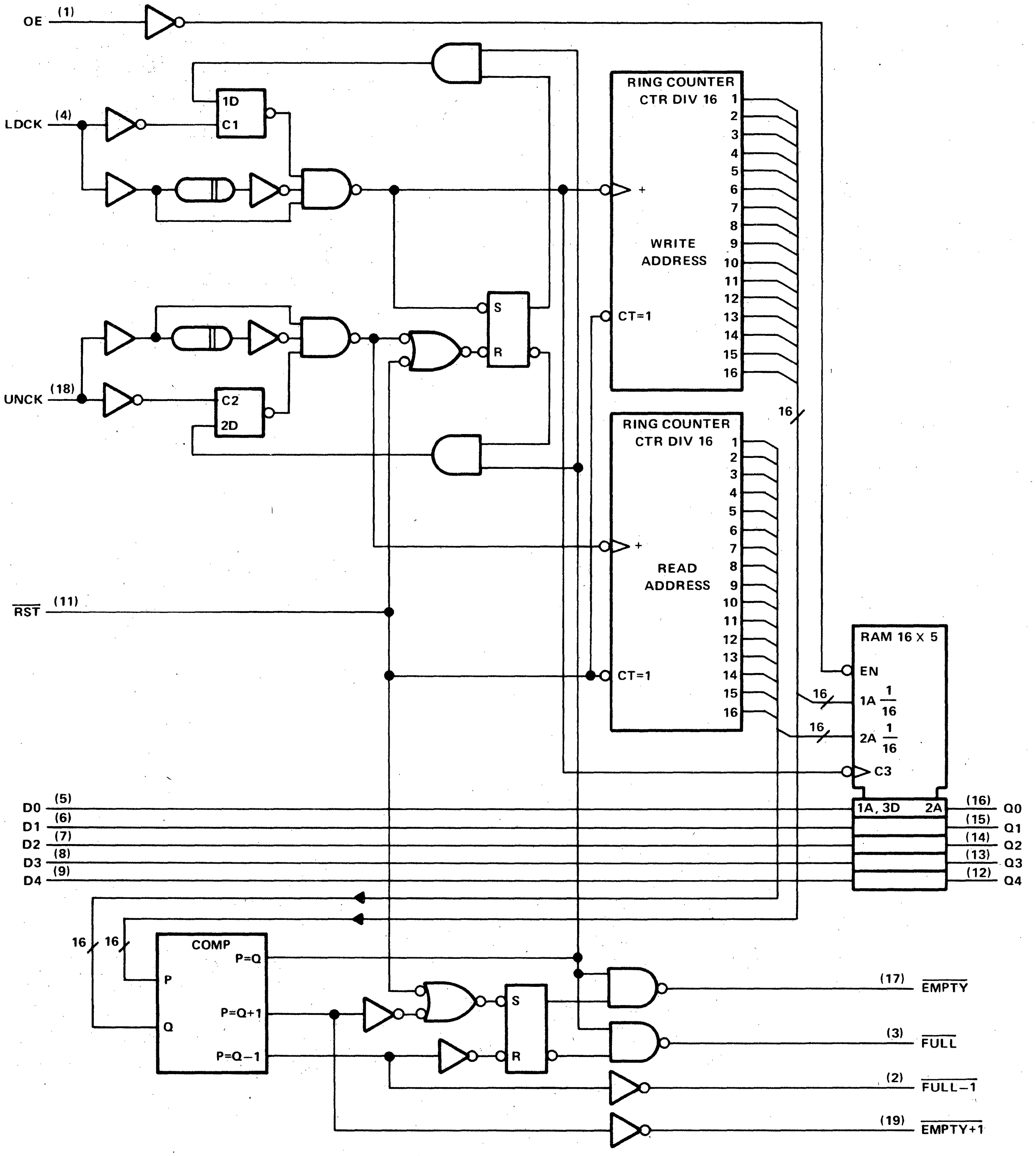
OE (1)
LDCK (4)
1D
C1
RING COUNTER
CTR DIV 16
WRITE ADDRESS
CT=1
S
R
UNCK (18)
C2
2D
READ ADDRESS
16
RST (11)
RAM 16 × 5
EN
1A 1/16
2A 1/16
C3
1A, 3D
2A
D0 (5)
D1 (6)
D2 (7)
D3 (8)
D4 (9)
(16) Q0
(15) Q1
(14) Q2
(13) Q3
(12) Q4
COMP
P=Q
P
Q
P=Q+1
P=Q−1
(17) EMPTY
(3) FULL
(2) FULL−1
(19) EMPTY+1

Pin numbers shown are for DW, J, and N packages.

TEXAS INSTRUMENTS
POST OFFICE BOX 225012 • DALLAS, TEXAS 75265

timing diagram

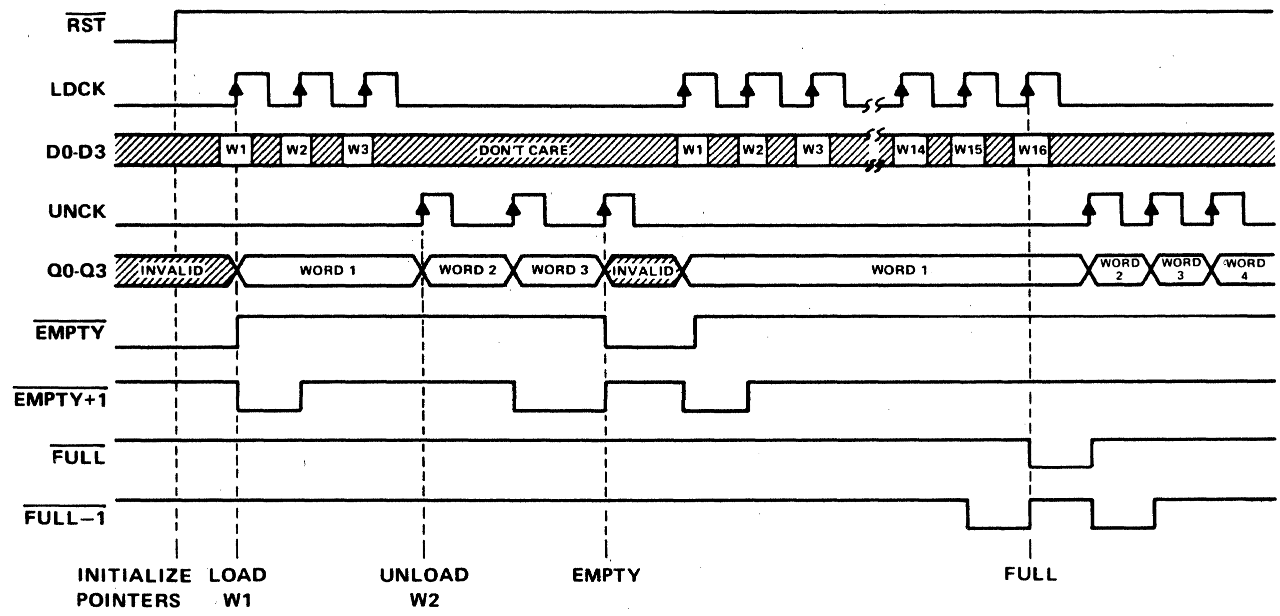
RST
LDCK
D0-D3
W1
W2
W3
DON'T CARE
W1
W2
W3
W14
W15
W16
UNCK
Q0-Q3
INVALID
WORD 1
WORD 2
WORD 3
INVALID
WORD 1
WORD 2
WORD 3
WORD 4
EMPTY
EMPTY+1
FULL
FULL−1
INITIALIZE POINTERS
LOAD W1
UNLOAD W2
EMPTY
FULL

absolute maximum ratings over operating free-air temperature range (unless otherwise noted)

Supply voltage, V_{CC} . . . . 7 V
Input voltage . . . . 7 V
Voltage applied to a disabled 3-state output . . . . 5.5 V
Operating free-air temperature range: SN54ALS233 . . . . −55°C to 125°C
SN74ALS233 . . . . 0°C to 70°C
Storage temperature range . . . . −65°C to 150°C

recommended operating conditions

			SN54ALS233			SN74ALS233			UNIT
			MIN	NOM	MAX	MIN	NOM	MAX	
V_{CC}	Supply voltage		4.5	5	5.5	4.5	5	5.5	V
V_{IH}	High-level input voltage		2			2			V
V_{IL}	Low-level input voltage				0.8			0.8	V
I_{OH}	High-level output current	Q outputs			−1			−1.6	mA
		Status flags			−0.4			−0.4	
I_{OL}	Low-level output current	Q outputs			12			24	mA
		Status flags			4			8	
f_{clock}	Clock frequency	LDCK	0		25	0		25	MHz
		UNCK	0		25	0		25	
t_w	Pulse duration	$\overline{RST}$ low							ns
		LDCK low							
		LDCK high							
		UNCK low							
		UNCK high							
t_{su}	Setup time	Data before LDCK↑							ns
		$\overline{RST}$ inactive before LDCK↑							
t_h	Hold time	Data after LDCK↑							ns
T_A	Operating free-air temperature		−55		125	0		70	°C

electrical characteristics over recommended operating free-air temperature range (unless otherwise noted)

PARAMETER		TEST CONDITIONS		SN54ALS233			SN74ALS233			UNIT
				MIN	TYP†	MAX	MIN	TYP†	MAX	
V_{IK}		V_{CC} = 4.5 V,	I_I = −18 mA			−1.5			−1.5	V
V_{OH}	Status flags	V_{CC} = 4.5 V to 5.5 V,	I_{OH} = −0.4 mA	$V_{CC}-2$			$V_{CC}-2$			V
	Q outputs	V_{CC} = 4.5 V,	I_{OH} = −1 mA	2.4	3.3					
		V_{CC} = 4.5 V,	I_{OH} = −2.6 mA				2.4	3.2		
V_{OL}	Q outputs	V_{CC} = 4.5 V,	I_{OL} = 12 mA		0.25	0.4		0.25	0.4	V
		V_{CC} = 4.5 V,	I_{OL} = 24 mA					0.35	0.5	
	Status flags	V_{CC} = 4.5 V,	I_{OH} = 4 mA		0.25	0.4		0.25	0.4	
		V_{CC} = 4.5 V,	I_{OL} = 8 mA					0.35	0.5	
I_{OZH}		V_{CC} = 5.5 V,	V_O = 2.7 V			20			20	μA
I_{OZL}		V_{CC} = 5.5 V,	V_O = 0.4 V			−20			−20	μA
I_I		V_{CC} = 5.5 V,	V_I = 7 V			0.1			0.1	mA
I_{IH}		V_{CC} = 5.5 V,	V_I = 2.7 V			20			20	μA
I_{IL}		V_{CC} = 5.5 V,	V_I = 0.4 V			−0.2			−0.2	mA
I_O‡		V_{CC} = 5.5 V,	V_O = 2.25 V	−30		−112	−30		−112	mA
I_{CC}		V_{CC} = 5.5 V	Outputs high							mA
			Outputs low							
			Outputs disabled							

†All typical values are at V_{CC} = 5 V, T_A = 25°C.
‡The output conditions have been chosen to produce a current that closely approximates one half of the true short-circuit output current, I_{OS}.

SN54ALS616, SN54ALS617, SN74ALS616, SN74ALS617
16-BIT PARALLEL ERROR DETECTION AND CORRECTION CIRCUITS

D2840, APRIL 1984—REVISED SEPTEMBER 1985

- **Detects and Corrects Single-Bit Errors**
- **Detects and Flags Dual-Bit Errors**
- **Built-In Diagnostic Capability**
- **Fast Write and Read Cycle Processing Times**
- **Byte-Write Capability**
- **Dependable Texas Instruments Quality and Reliability**

DEVICE	OUTPUT
'ALS616	3-State
'ALS617	Open-Collector

description

The 'ALS616 and 'ALS617 are 16-bit parallel error detection and correction circuits in 40-pin, 600-mil packages. The EDACs use a modified Hamming code to generate a 6-bit check word from a 16-bit data word. This check word is stored along with the data word during the memory write cycle. During memory read cycles, the 22-bit words from memory are processed by the EDACs to determine if errors have occurred in memory.

Single-bit errors in the 16-bit data word are flagged and corrected. Single-bit errors in the 6-bit check word are flagged, but the data word will remain unaltered. The 6-bit error syndrome code will pinpoint the error-generating location.

Dual-bit errors are flagged but not corrected. These errors may occur in any two bits of the 22-bit word from memory. The gross-error condition of all lows or all highs from memory will be detected. Otherwise, errors in three or more bits of the 22-bit word are beyond the capabilities of these devices to detect.

Read-modify-write (byte-control) operations can be performed with the 'ALS616 and 'ALS617 EDACs by using output latch enable, $\overline{\text{LEDBO}}$, and individual $\overline{\text{OEB0}}$ and $\overline{\text{OEB1}}$ byte control pins.

Diagnostics are performed on the EDACs by controls and internal paths that allow the user to read the contents of the DB and CB input latches. These will determine if the failure occurred in memory or in the EDAC.

SN54ALS616, SN54ALS617 . . . JD PACKAGE
SN74ALS616, SN74ALS617 . . . JD OR N PACKAGE
(TOP VIEW)

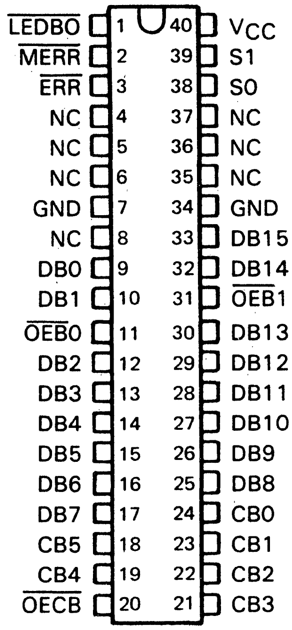
LEDBO 1
MERR 2
ERR 3
NC 4
NC 5
NC 6
GND 7
NC 8
DB0 9
DB1 10
OEB0 11
DB2 12
DB3 13
DB4 14
DB5 15
DB6 16
DB7 17
CB5 18
CB4 19
OECB 20
21 CB3
22 CB2
23 CB1
24 CB0
25 DB8
26 DB9
27 DB10
28 DB11
29 DB12
30 DB13
31 OEB1
32 DB14
33 DB15
34 GND
35 NC
36 NC
37 NC
38 S0
39 S1
40 VCC

SN74ALS616, SN74ALS617 . . . FN PACKAGE
(TOP VIEW)

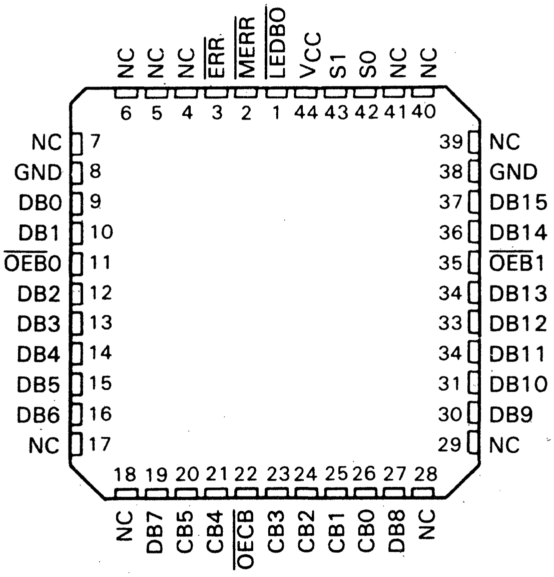
NC 6
NC 5
NC 4
ERR 3
MERR 2
LEDBO 1
VCC 44
S1 43
S0 42
NC 41
NC 40
NC 7
GND 8
DB0 9
DB1 10
OEB0 11
DB2 12
DB3 13
DB4 14
DB5 15
DB6 16
NC 17
39 NC
38 GND
37 DB15
36 DB14
35 OEB1
34 DB13
33 DB12
34 DB11
31 DB10
30 DB9
29 NC
18 NC
19 DB7
20 CB5
21 CB4
22 OECB
23 CB3
24 CB2
25 CB1
26 CB0
27 DB8
28 NC

NC—No internal connection

The SN54ALS616 and SN54ALS617 are characterized for operation over the full military temperature range of −55°C to 125°C. The SN74ALS616 and SN74ALS617 are characterized for operation from 0°C to 70°C.

This document contains information on products in more than one phase of development. The status of each device is indicated on the page(s) specifying its electrical characteristics.

Copyright © 1984, Texas Instruments Incorporated

TEXAS INSTRUMENTS
POST OFFICE BOX 225012 • DALLAS, TEXAS 75265

TABLE 1. WRITE CONTROL FUNCTION

MEMORY CYCLE	EDAC FUNCTION	CONTROL S1 S0	DATA I/O	DB CONTROL $\overline{OEB0}$ & $\overline{OEB1}$	DB OUTPUT LATCH $\overline{LEDBO}$	CHECK I/O	CB CONTROL $\overline{OECB}$	ERROR FLAGS $\overline{ERR}$ $\overline{MERR}$
Write	Generate check word	L L	Input	H	X	Output check bits†	L	H H

†See Table 2 for details on check bit generation.

memory write cycle details

During a memory write cycle, the check bits (CB0 thru CB5) are generated internally in the EDAC by six 8-input parity generators using the 16-bit data word as defined in Table 2. These six check bits are stored in memory along with the original 16-bit data word. This 22-bit word will later be used in the memory read cycle for error detection and correction.

TABLE 2. PARITY ALGORITHM

CHECK WORD	16-BIT DATA WORD															
BIT	15	14	13	12	11	10	9	8	7	6	5	4	3	2	1	0
CB0			X		X	X	X			X			X		X	X
CB1		X		X		X	X	X				X		X		X
CB2	X			X	X			X	X		X			X	X	
CB3	X	X	X				X	X			X	X	X			
CB4	X	X	X	X	X	X			X	X						
CB5									X	X	X	X	X	X	X	X

The six check bits are parity bits derived from the matrix of data bits as indicated by "X" for each bit.

error detection and correction details

During a memory read cycle, the 6-bit check word is retrieved along with the actual data. In order to be able to determine whether the data from memory is acceptable to use as presented to the bus, the error flags must be tested to determine if they are at the high level.

The first case in Table 3 represents the normal, no-error conditions. The EDAC presents highs on both flags. The next two cases of single-bit errors give a high on $\overline{MERR}$ and a low on $\overline{ERR}$, which is the signal for a correctable error, and the EDAC should be sent through the correction cycle. The last three cases of double-bit errors will cause the EDAC to signal lows on both $\overline{ERR}$ and $\overline{MERR}$, which is the interrupt indication for the CPU.

TABLE 3. ERROR FUNCTION

TOTAL NUMBER OF ERRORS		ERROR FLAGS		DATA CORRECTION
16-BIT DATA WORD	6-BIT CHECK WORD	$\overline{ERR}$	$\overline{MERR}$	
0	0	H	H	Not applicable
1	0	L	H	Correction
0	1	L	H	Correction
1	1	L	L	Interrupt
2	0	L	L	Interrupt
0	2	L	L	Interrupt

TABLE 4. READ, FLAG, AND CORRECT FUNCTION

MEMORY CYCLE	EDAC FUNCTION	CONTROL S1	CONTROL S0	DATA I/O	DB CONTROL $\overline{OEB0}$ & $\overline{OEB1}$	DB OUTPUT LATCH $\overline{LEDBO}$	CHECK I/O	CB CONTROL $\overline{OECB}$	ERROR FLAGS $\overline{ERR}$ $\overline{MERR}$
Read	Read & flag	H	L	Input	H	X	Input	H	Enabled†
Read	Latch input data & check bits	H	H	Latched input data	H	L	Latched input check word	H	Enabled†
Read	Output corrected data and syndrome bits	H	H	Output corrected data word	L	X	Output syndrome bits‡	L	Enabled†

†See Table 3 for error description.
‡See Table 5 for error location.

Error detection is accomplished as the 6-bit check word and the 16-bit data word from memory are applied to the internal parity generators/checkers. If the parity of all six groupings of data and check bits are correct, it is assumed that no error has occurred and both error flags will be high.

If the parity of one or more of the check groups is incorrect, an error has occurred and the proper error flag or flags will be set low. The two-bit error is not correctable since the parity tree can only identify single-bit errors. Both error flags are set low when any two-bit error is detected.

Three or more simultaneous bit errors can cause the EDAC to believe that no error, a correctable error, or an uncorrectable error has occurred and will produce erroneous results in all three cases. It should be noted that the gross-error conditions of all highs will be detected.

As the corrected word is made available on the data I/O port (DB0 thru DB15), the check word I/O port (CB0 thru CB5) presents a 6-bit syndrome error code. This syndrome code can be used to locate the bad memory chip. See Table 5 for syndrome decoding.

TABLE 5. SYNDROME DECODING

SYNDROME BITS						ERROR
5	4	3	2	1	0	
L	L	L	L	L	L	2-bit
L	L	L	L	L	H	unc
L	L	L	L	H	L	unc
L	L	L	L	H	H	2-bit
L	L	L	H	L	L	unc
L	L	L	H	L	H	2-bit
L	L	L	H	H	L	2-bit
L	L	L	H	H	H	unc
L	L	H	L	L	L	unc
L	L	H	L	L	H	2-bit
L	L	H	L	H	L	2-bit
L	L	H	L	H	H	DB7
L	L	H	H	L	L	2-bit
L	L	H	H	L	H	unc
L	L	H	H	H	L	DB6
L	L	H	H	H	H	2-bit

SYNDROME BITS						ERROR
5	4	3	2	1	0	
L	H	L	L	L	L	unc
L	H	L	L	L	H	2-bit
L	H	L	L	H	L	2-bit
L	H	L	L	H	H	DB5
L	H	L	H	L	L	2-bit
L	H	L	H	L	H	DB4
L	H	L	H	H	L	DB3
L	H	L	H	H	H	2-bit
L	H	H	L	L	L	2-bit
L	H	H	L	L	H	DB2
L	H	H	L	H	L	DB1
L	H	H	L	H	H	2-bit
L	H	H	H	L	L	DB0
L	H	H	H	L	H	2-bit
L	H	H	H	H	L	2-bit
L	H	H	H	H	H	CB5

SYNDROME BITS						ERROR
5	4	3	2	1	0	
H	L	L	L	L	L	unc
H	L	L	L	L	H	2-bit
H	L	L	L	H	L	2-bit
H	L	L	L	H	H	DB15
H	L	L	H	L	L	2-bit
H	L	L	H	L	H	DB14
H	L	L	H	H	L	DB13
H	L	L	H	H	H	2-bit
H	L	H	L	L	L	2-bit
H	L	H	L	L	H	DB12
H	L	H	L	H	L	DB11
H	L	H	L	H	H	2-bit
H	L	H	H	L	L	DB10
H	L	H	H	L	H	2-bit
H	L	H	H	H	L	2-bit
H	L	H	H	H	H	CB4

SYNDORME BITS						ERROR
5	4	3	2	1	0	
H	H	L	L	L	L	2-bit
H	H	L	L	L	H	DB8
H	H	L	L	H	L	unc
H	H	L	L	H	H	2-bit
H	H	L	H	L	L	DB9
H	H	L	H	L	H	2-bit
H	H	L	H	H	L	2-bit
H	H	L	H	H	H	CB3
H	H	H	L	L	L	unc
H	H	H	L	L	H	2-bit
H	H	H	L	H	L	2-bit
H	H	H	L	H	H	CB2
H	H	H	H	L	L	2-bit
H	H	H	H	L	H	CB1
H	H	H	H	H	L	CB0
H	H	H	H	H	H	none

CB X = error in check bit X
DB Y = error in data bit Y
2-bit = double-bit error
unc = uncorrectable multibit error

read-modify-write (byte control) operations

The 'ALS616 and 'ALS617 devices are capable of byte-write operations. The 22-bit word from memory must first be latched into the DB and CB input latches. This is easily accomplished by switching from the read and flag mode (S1 = H, S0 = L) to the latch input mode (S1 = H, S0 = H). The EDAC will then make any corrections, if necessary, to the data word and place it at the input of the output data latch. This data word must then be latched into the output data latch by taking $\overline{\text{LEDB0}}$ from a low to a high.

Byte control can now be employed on the data word through the $\overline{\text{OEB0}}$ or $\overline{\text{OEB1}}$ controls. $\overline{\text{OEB0}}$ controls DB0-DB7 (byte 0), $\overline{\text{OEB1}}$ controls DB8-DB15 (byte 1).

Placing a high on the byte control will disable the output and the user can modify the byte. If a low is placed on the byte control, then the original byte is allowed to pass onto the data bus unchanged. If the original data word is altered through byte control, a new check word must be generated before it is written back into memory. This is easily accomplished by taking control S1 and S0 low. Table 6 lists the read-modify-write functions.

TABLE 6. READ-MODIFY-WRITE FUNCTION

MEMORY CYCLE	EDAC FUNCTION	CONTROL S1	CONTROL S0	BYTEn†	$\overline{\text{OEB}}$n†	DB OUTPUT LATCH $\overline{\text{LEDBO}}$	CHECK I/O	CB CONTROL	ERROR FLAG $\overline{\text{ERR}}$ $\overline{\text{MERR}}$
Read	Read & Flag	H	L	Input	H	X	Input	H	Enabled
Read	Latch input data & check bits	H	H	Latched Input data	H	L	Latched input check word	H	Enabled
Read	Latch corrected data word into output latch	H	H	Latched output data word	H	H	Hi-Z	H	Enabled
							Output Syndrome bits	L	
Modify/ write	Modify appropriate byte or bytes & generate new check word	L	L	Input modified BYTE0	H	H	Output check word	L	H H
				Output unchanged BYTE0	L				

†$\overline{\text{OEB}}$0 controls DB0-DB7 (BYTE0), $\overline{\text{OEB}}$1 controls DB8-DB15 (BYTE1)

diagnostic operations

The 'ALS616 and 'ALS617 are capable of diagnostics that allow the user to determine whether the EDAC or the memory is failing. The diagnostic function tables will help the user to see the possibilities for diagnostic control.

In the diagnostic mode (S1 = L, S0 = H), the checkword is latched into the input latch while the data input latch remains transparent. This lets the user apply various data words against a fixed known checkword. If the user applies a diagnostic data word with an error in any bit location, the $\overline{\text{ERR}}$ flag should be low. If a diagnostic data word with two errors in any bit location is applied, the $\overline{\text{MERR}}$ flag should be low. After the checkword is latched into the input latch, it can be verified by taking $\overline{\text{OECB}}$ low. This outputs the latched checkword. The diagnostic data word can be latched into the output data latch and verified via the $\overline{\text{LEDBO}}$ control pin. By changing from the diagnostic mode (S1 = L, S0 = H), the user can verify that the EDAC will correct the diagnostic data word. Also, the syndrome bits can be produced to verify that the EDAC pinpoints the error location. Table 7 lists the diagnostic functions.

TABLE 7. DIAGNOSTIC FUNCTION

EDAC FUNCTION	CONTROL S1 S0	DATA I/O	DB BYTE CONTROL $\overline{\text{OEB}n}$	DB OUTPUT LATCH $\overline{\text{LEDBO}}$	CHECK I/O	CB CONTROL $\overline{\text{OECB}}$	ERROR FLAGS $\overline{\text{ERR}}$ $\overline{\text{MERR}}$
Read & flag	H L	Input correct data word	H	X	Input correct check bits	H	H H
Latch input check word while data input latch remains transparent	L H	Input diagnostic data word†	H	L	Latched input check bits	H	Enabled
Latch diagnostic data word into output latch	L H	Input diagnostic data word†	H	H	Output latched check bits	L	Enabled
					Hi-Z	H	
Latch diagnostic data word into input latch	H H	Latched input diagnostic data word	H	H	Output syndrome bits	L	Enabled
					Hi-Z	H	
Output diagnostic data word & syndrome bits	H H	Output diagnostic data word	L	H	Output syndrome bits	L	Enabled
					Hi-Z	H	
Output corrected diagnostic data word & output syndrome bits	H H	Output corrected diagnostic data word	L	L	Output syndrome bits	L	Enabled
					Hi-Z	H	

†Diagnostic data is a data word with an error in one bit location except when testing the $\overline{\text{MERR}}$ error flag. In this case, the diagnostic data word will contain errors in two bit locations.

logic diagram (positive logic)

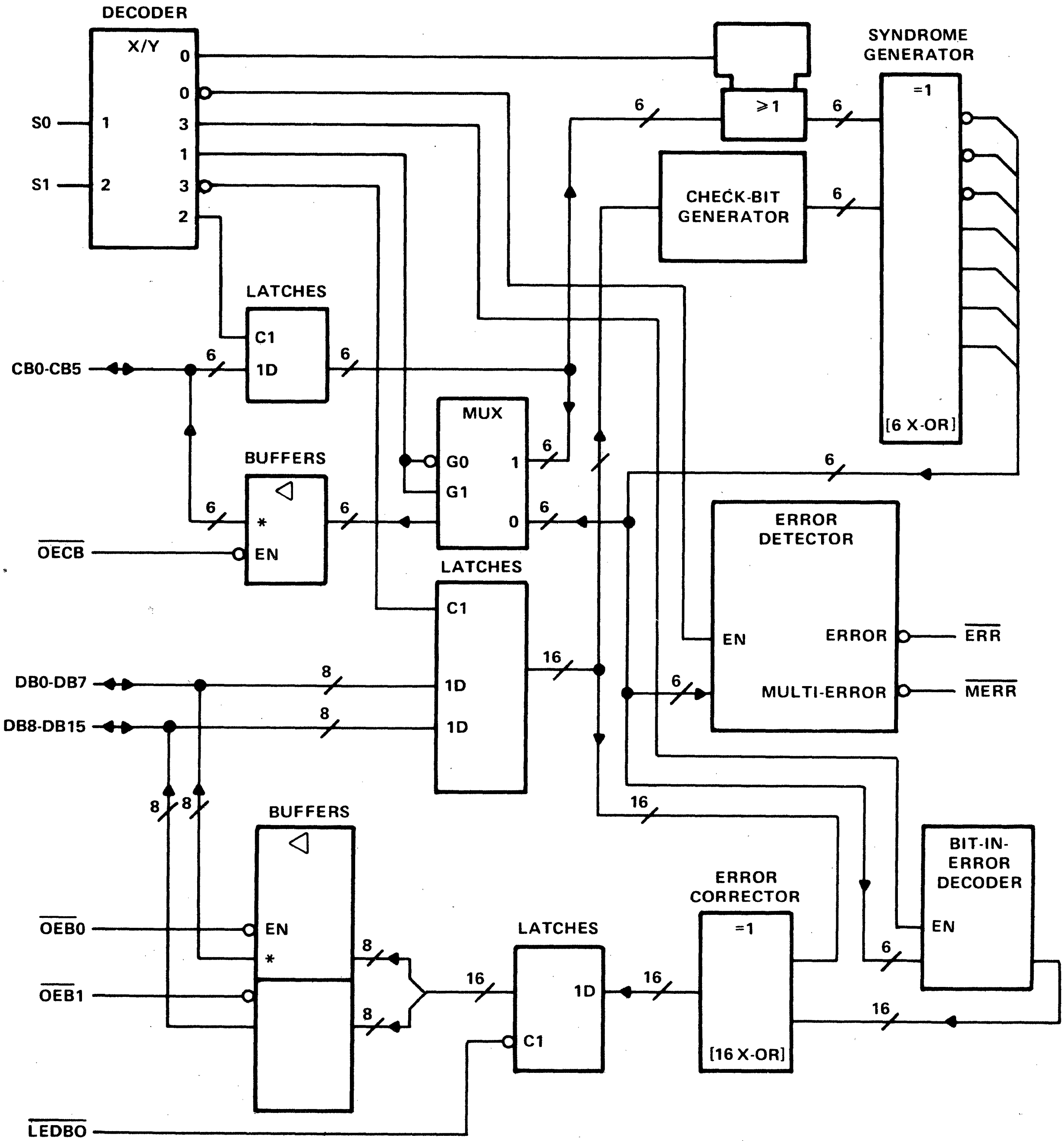
DECODER
X/Y
S0
S1
1
2
0
0
3
1
3
2
LATCHES
C1
1D
CB0-CB5
6
6
BUFFERS
*
EN
OECB
MUX
G0
G1
1
0
LATCHES
C1
1D
1D
16
8
8
DB0-DB7
DB8-DB15
BUFFERS
EN
*
OEB0
OEB1
LATCHES
1D
C1
LEDBO
≥1
SYNDROME
GENERATOR
=1
[6 X-OR]
CHECK-BIT
GENERATOR
ERROR
DETECTOR
EN
ERROR
MULTI-ERROR
ERR
MERR
ERROR
CORRECTOR
=1
[16 X-OR]
BIT-IN-
ERROR
DECODER
EN
16

*'ALS616 has 3-state (▽) check-bit and data outputs.
'ALS617 has open-collector(◇) check-bit and data outputs.

absolute maximum ratings over operating free-air temperature range (unless otherwise noted)

Supply voltage, V_{CC} (see Note 1)		7 V
Input voltage: CB and DB		5.5 V
All others		7 V
Operating case temperature range	SN54ALS616, SN54ALS617	−55°C to 125°C
Operating free-air temperature range	SN74ALS616, SN74ALS617	0°C to 70°C
Storage temperature range		−65°C to 150°C

recommended operating conditions

		SN54ALS616 SN54ALS617			SN74ALS616 SN74ALS617			UNIT
		MIN	NOM	MAX	MIN	NOM	MAX	
V_{CC} Supply voltage		4.5	5	5.5	4.5	5	5.5	V
V_{IH} High-level input voltage		2			2			V
V_{IL} Low-level input voltage				0.8			0.8	V
V_{OH} High-level output voltage	DB or CB 'ALS617			5.5			5.5	V
I_{OH} High-level output current	$\overline{\text{ERR}}$ or $\overline{\text{MERR}}$			−0.4			−0.4	mA
	DB or CB 'ALS616			−1			−2.6	
I_{OL} Low-level output current	$\overline{\text{ERR}}$ or $\overline{\text{MERR}}$			4			8	mA
	DB or CB			12			24	
t_w Pulse duration	$\overline{\text{LEDBO}}$ low	45			25			ns
t_{su} Setup time	(1) Data and check word before S0↑ (S1 = H)	15			12			ns
	(2) S0 high before $\overline{\text{LEDBO}}$↑ (S1 = H)†	45			45			
	(3) $\overline{\text{LEDBO}}$ high before the earlier of S0↓ or S1↓†	0			0			
	(4) $\overline{\text{LEDBO}}$ high before S1↑ (S0 = H)	0			0			
	(5) Diagnostic data word before S1↑ (S0 = H)	28			12			
	(6) Diagnostic check word before the later of S1↓ or S0↑	15			12			
	(7) Diagnostic data word before $\overline{\text{LEDBO}}$↑ (S1 = L and S0 = H)†	35			20			
t_h Hold time	(8) Read-mode, S0 low and S1 high	35			30			ns
	(9) Data and check word after S0↑ (S1 = H)	20			15			
	(10) Data word after S1↑ (S0 = H)	20			15			
	(11) Check word after the later of S1↓ or S0↑	20			15			
	(12) Diagnostic data word after $\overline{\text{LEDBO}}$↑ (S1 = L, S0 = H)‡	0			0			
t_{corr} Correction time (see Figure 1)		70			65			ns
T_C Operating case temperature		−55		125				°C
T_A Operating free-air temperature					0		70	°C

†These times ensure that corrected data is saved in the output data latch.
‡These times ensure that the diagnostic data word is saved in the output data latch.

'ALS616 electrical characteristics over recommended operating temperature range (unless otherwise noted)

PARAMETER		TEST CONDITIONS		SN54ALS616			SN74ALS616			UNIT
				MIN	TYP†	MAX	MIN	TYP†	MAX	
V_{IK}		V_{CC} = 4.5 V,	I_I = −18 mA			−1.5			−1.5	V
V_{OH}	All outputs	V_{CC} = 4.5 V to 5.5 V,	I_{OH} = −0.4 mA	V_{CC}−2			V_{CC}−2			V
	DB or CB	V_{CC} = 4.5 V,	I_{OH} = −1 mA	2.4	3.3					
		V_{CC} = 4.5 V,	I_{OH} = −2.6 mA				2.4	3.2		
V_{OL}	$\overline{\text{ERR}}$ or $\overline{\text{MERR}}$	V_{CC} = 4.5 V,	I_{OH} = 4 mA		0.25	0.4		0.25	0.4	V
		V_{CC} = 4.5 V,	I_{OL} = 8 mA					0.35	0.5	
	DB or CB	V_{CC} = 4.5 V,	I_{OL} = 12 mA		0.25	0.4		0.25	0.4	
		V_{CC} = 4.5 V,	I_{OL} = 24 mA					0.35	0.5	
I_I	S0 or S1	V_{CC} = 5.5 V,	V_I = 7 V			0.1			0.1	mA
	DB or CB	V_{CC} = 5.5 V,	V_I = 5.5 V			0.1			0.1	
I_{IH}	S0 or S1	V_{CC} = 5.5 V,	V_I = 2.7 V			20			20	μA
	DB or CB‡					20			20	
I_{IL}	S0 or S1	V_{CC} = 5.5 V,	V_I = 0.4 V			−0.4			−0.4	mA
	DB or CB‡					−0.1			−0.1	
I_O§		V_{CC} = 5.5 V,	V_O = 2.25 V	−30		−112	−30		−112	mA
I_{CC}		V_{CC} = 5.5 V	See Note 1		110	190		110	170	mA

†All typical values are at V_{CC} = 5 V, T_A = 25°C.

‡For I/O ports, the parameters I_{IH} and I_{IL} include the off-state output current.

§The output conditions have been chosen to produce a current that closely approximates one half of the true short-circuit output current, I_{OS}.

NOTE 1: I_{CC} is measured with S0 and S1 at 4.5 V and all CB and DB pins grounded.

'ALS616 switching characteristics, V_{CC} = 4.5 V to 5.5 V, C_L = 50 pF, T_C = −55°C to 125°C for SN54ALS616, T_A = 0°C to 70°C for SN74ALS616

PARAMETER	FROM (INPUT)	TO (OUTPUT)	TEST CONDITIONS	SN54ALS616		SN74ALS616		UNIT
				MIN	MAX	MIN	MAX	
t_{pd}	DB and CB	$\overline{\text{ERR}}$	S1 = H, S0 = L, R_L = 500 Ω	10	43	10	40	ns
	DB	$\overline{\text{ERR}}$	S1 = L, S0 = H, R_L = 500 Ω	10	43	10	40	
t_{pd}	DB and CB	$\overline{\text{MERR}}$	S1 = H, S0 = L, R_L = 500 Ω	15	65	15	55	ns
	DB	$\overline{\text{MERR}}$	S1 = L, S0 = H, R_L = 500 Ω	15	65	15	55	
t_{pd}	S0↓ and S1↓	CB	R1 = R2 = 500 Ω	10	60	10	49	ns
t_{pd}	DB	CB	S1 = L, S0 = L, R1 = R2 = 500 Ω	10	60	10	49	ns
t_{pd}	$\overline{\text{LEDBO}}$↓	DB	S1 = X, S0 = H, R1 = R2 = 500 Ω	7	35	7	30	ns
t_{pd}	S1↑	CB	S0 = H, R1 = R2 = 500 Ω	10	50	10	50	ns
t_{en}	$\overline{\text{OECB}}$↓	CB	S0 = H, S1 = X, R1 = R2 = 500 Ω	2	30	2	27	ns
t_{dis}	$\overline{\text{OECB}}$↑	CB	S0 = H, S1 = X, R1 = R2 = 500 Ω	2	30	2	27	ns
t_{en}	$\overline{\text{OEB0}}$ and $\overline{\text{OEB1}}$↓	DB	S0 = H, S1 = X, R1 = R2 = 500 Ω	2	30	2	27	ns
t_{dis}	$\overline{\text{OEB0}}$ and $\overline{\text{OEB1}}$↑	DB	S0 = H, S1 = X, R1 = R2 = 500 Ω	2	30	2	27	ns

PRODUCTION DATA documents contain information current as of publication date. Products conform to specifications per the terms of Texas Instruments standard warranty. Production processing does not necessarily include testing of all parameters.

SN54ALS632A, SN54ALS633 THRU SN54ALS635
SN74ALS632A, SN74ALS633 THRU SN74ALS635
32-BIT PARALLEL ERROR DETECTION AND CORRECTION CIRCUITS

D2661, DECEMBER 1982 – REVISED NOVEMBER 1985

- **Detects and Corrects Single-Bit Errors**
- **Detects and Flags Dual-Bit Errors**
- **Built-In Diagnostic Capability**
- **Fast Write and Read Cycle Processing Times**
- **Byte-Write Capability . . . 'ALS632A and 'ALS633**
- **Dependable Texas Instruments Quality and Reliability**

DEVICE	PACKAGE	BYTE-WRITE	OUTPUT
'ALS632A	52-pin	yes	3-State
'ALS633	52-pin	yes	Open-Collector
'ALS634	48-pin	no	3-State
'ALS635	48-pin	no	Open-Collector

description

The 'ALS632A and 'ALS633 through 'ALS635 devices are 32-bit parallel error detection and correction circuits (EDACs) in 52-pin ('ALS632A and 'ALS633) or 48-pin ('ALS634 and 'ALS635) 600-mil packages. The EDACs use a modified Hamming code to generate a 7-bit check word from a 32-bit data word. This check word is stored along with the data word during the memory write cycle. During the memory read cycle, the 39-bit words from memory are processed by the EDACs to determine if errors have occurred in memory.

Single-bit errors in the 32-bit data word are flagged and corrected.

Single-bit errors in the 7-bit check word are flagged, and the CPU sends the EDAC through the correction cycle even though the 32-bit data word is not in error. The correction cycle will simply pass along the original 32-bit data word in this case and produce error syndrome bits to pinpoint the error-generating location.

Dual-bit errors are flagged but not corrected. These errors may occur in any two bits of the 39-bit data word from memory (two errors in the 32-bit data word, two errors in the 7-bit check word, or one error in each word). The gross-error condition of all lows or all highs from memory will be detected. Otherwise, errors in three or more bits of the 39-bit word are beyond the capabilities of these devices to detect.

'ALS632A, 'ALS633 . . . JD PACKAGE

(TOP VIEW)

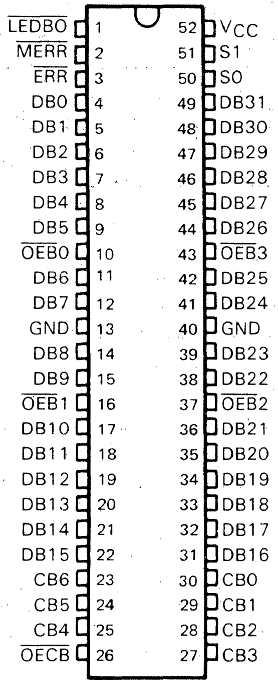
LEDBO 1
MERR 2
ERR 3
DB0 4
DB1 5
DB2 6
DB3 7
DB4 8
DB5 9
OEB0 10
DB6 11
DB7 12
GND 13
DB8 14
DB9 15
OEB1 16
DB10 17
DB11 18
DB12 19
DB13 20
DB14 21
DB15 22
CB6 23
CB5 24
CB4 25
OECB 26
52 VCC
51 S1
50 S0
49 DB31
48 DB30
47 DB29
46 DB28
45 DB27
44 DB26
43 OEB3
42 DB25
41 DB24
40 GND
39 DB23
38 DB22
37 OEB2
36 DB21
35 DB20
34 DB19
33 DB18
32 DB17
31 DB16
30 CB0
29 CB1
28 CB2
27 CB3

'ALS632A, 'ALS633 . . . FN PACKAGE

(TOP VIEW)

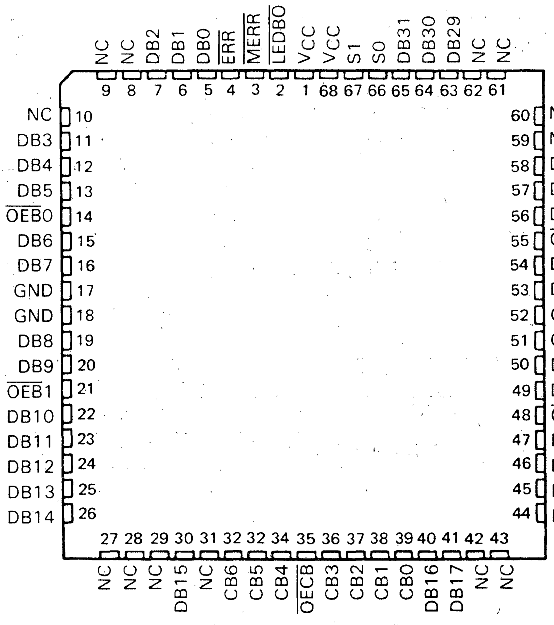
NC 9
NC 8
DB2 7
DB1 6
DB0 5
ERR 4
MERR 3
LEDBO 2
VCC 1
VCC 68
S1 67
S0 66
DB31 65
DB30 64
DB29 63
NC 62
NC 61
NC 10
DB3 11
DB4 12
DB5 13
OEB0 14
DB6 15
DB7 16
GND 17
GND 18
DB8 19
DB9 20
OEB1 21
DB10 22
DB11 23
DB12 24
DB13 25
DB14 26
60 NC
59 NC
58 DB28
57 DB27
56 DB26
55 OEB3
54 DB25
53 DB24
52 GND
51 GND
50 DB23
49 DB22
48 OEB2
47 DB21
46 DB20
45 DB19
44 DB18
27 NC
28 NC
29 NC
30 DB15
31 NC
32 CB6
32 CB5
34 CB4
35 OECB
36 CB3
37 CB2
38 CB1
39 CB0
40 DB16
41 DB17
42 NC
43 NC

NC – No internal connection

This document contains information on products in more than one phase of development. The status of each device is indicated on the page(s) specifying its electrical characteristics.

Copyright © 1985, Texas Instruments Incorporated

TEXAS INSTRUMENTS
POST OFFICE BOX 225012 • DALLAS, TEXAS 75265

Read-modify-write (byte-control) operations can be performed with the 'ALS632A and 'ALS633 EDACs by using output latch enable, $\overline{\text{LEDBO}}$, and the individual $\overline{\text{OEB0}}$ thru $\overline{\text{OEB3}}$ byte control pins.

Diagnostics are performed on the EDACs by controls and internal paths that allow the user to read the contents of the DB and CB input latches. These will determine if the failure occurred in memory or in the EDAC.

'ALS634, 'ALS635 . . . JD PACKAGE
(TOP VIEW)

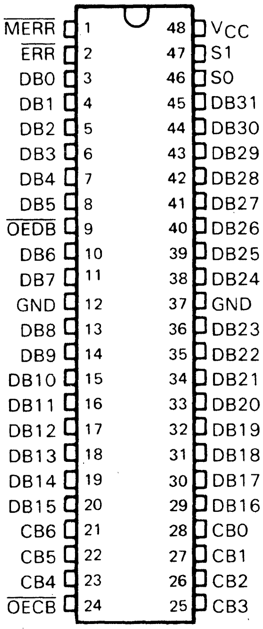
$\overline{\text{MERR}}$ 1
$\overline{\text{ERR}}$ 2
DB0 3
DB1 4
DB2 5
DB3 6
DB4 7
DB5 8
$\overline{\text{OEDB}}$ 9
DB6 10
DB7 11
GND 12
DB8 13
DB9 14
DB10 15
DB11 16
DB12 17
DB13 18
DB14 19
DB15 20
CB6 21
CB5 22
CB4 23
$\overline{\text{OECB}}$ 24
48 VCC
47 S1
46 S0
45 DB31
44 DB30
43 DB29
42 DB28
41 DB27
40 DB26
39 DB25
38 DB24
37 GND
36 DB23
35 DB22
34 DB21
33 DB20
32 DB19
31 DB18
30 DB17
29 DB16
28 CB0
27 CB1
26 CB2
25 CB3

'ALS634, 'ALS635 . . . FN PACKAGE
(TOP VIEW)

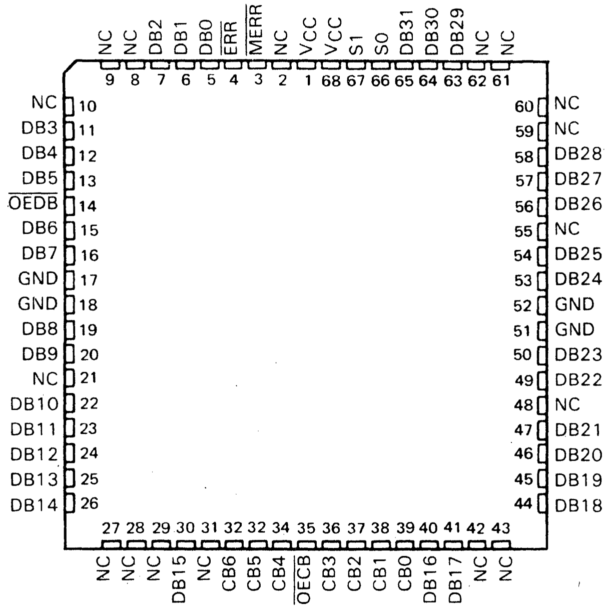
NC 9
NC 8
DB2 7
DB1 6
DB0 5
$\overline{\text{ERR}}$ 4
$\overline{\text{MERR}}$ 3
NC 2
VCC 1
VCC 68
S1 67
S0 66
DB31 65
DB30 64
DB29 63
NC 62
NC 61
NC 10
DB3 11
DB4 12
DB5 13
$\overline{\text{OEDB}}$ 14
DB6 15
DB7 16
GND 17
GND 18
DB8 19
DB9 20
NC 21
DB10 22
DB11 23
DB12 24
DB13 25
DB14 26
60 NC
59 NC
58 DB28
57 DB27
56 DB26
55 NC
54 DB25
53 DB24
52 GND
51 GND
50 DB23
49 DB22
48 NC
47 DB21
46 DB20
45 DB19
44 DB18
27 NC
28 NC
29 NC
30 DB15
31 NC
32 CB6
32 CB5
34 CB4
35 $\overline{\text{OECB}}$
36 CB3
37 CB2
38 CB1
39 CB0
40 DB16
41 DB17
42 NC
43 NC

NC—No internal connection

TABLE 1. WRITE CONTROL FUNCTION

MEMORY CYCLE	EDAC FUNCTION	CONTROL S1	CONTROL S0	DATA I/O	DB CONTROL $\overline{\text{OEBn}}$ OR $\overline{\text{OEDB}}$	DB OUTPUT LATCH ('ALS632A, 'ALS633) $\overline{\text{LEDBO}}$	CHECK I/O	CB CONTROL $\overline{\text{OECB}}$	ERROR FLAGS $\overline{\text{ERR}}$	ERROR FLAGS $\overline{\text{MERR}}$
Write	Generate check word	L	L	Input	H	X	Output check bits†	L	H	H

†See Table 2 for details on check bit generation.

memory write cycle details

During a memory write cycle, the check bits (CB0 thru CB6) are generated internally in the EDAC by seven 16-input parity generators using the 32-bit data word as defined in Table 2. These seven check bits are stored in memory along with the original 32-bit data word. This 32-bit word will later be used in the memory read cycle for error detection and correction.

TABLE 2. PARITY ALGORITHM

CHECK WORD	32-BIT DATA WORD																															
BIT	31	30	29	28	27	26	25	24	23	22	21	20	19	18	17	16	15	14	13	12	11	10	9	8	7	6	5	4	3	2	1	0
CB0	X		X	X		X					X		X	X	X			X			X		X	X	X	X		X				X
CB1				X		X		X		X		X		X	X	X				X		X		X		X		X		X	X	X
CB2	X		X			X	X		X			X	X			X	X		X			X	X		X			X	X			X
CB3			X	X	X				X	X	X				X	X			X	X	X				X	X	X				X	X
CB4	X	X							X	X	X	X	X	X			X	X							X	X	X	X	X	X		
CB5	X	X	X	X	X	X	X	X									X	X	X	X	X	X	X	X								
CB6	X	X	X	X	X	X	X	X																	X	X	X	X	X	X	X	X

The seven check bits are parity bits derived from the matrix of data bits as indicated by "X" for each bit.

error detection and correction details

During a memory read cycle, the 7-bit check word is retrieved along with the actual data. In order to be able to determine whether the data from memory is acceptable to use as presented to the bus, the error flags must be tested to determine if they are at the high level.

The first case in Table 3 represents the normal, no-error conditions. The EDAC presents highs on both flags. The next two cases of single-bit errors give a high on $\overline{\text{MERR}}$ and a low on $\overline{\text{ERR}}$, which is the signal for a correctable error, and the EDAC should be sent through the correction cycle. The last three cases of double-bit errors will cause the EDAC to signal lows on both $\overline{\text{ERR}}$ and $\overline{\text{MERR}}$, which is the interrupt indication for the CPU.

TABLE 3. ERROR FUNCTION

TOTAL NUMBER OF ERRORS		ERROR FLAGS		DATA CORRECTION
32-BIT DATA WORD	7-BIT CHECK WORD	$\overline{\text{ERR}}$	$\overline{\text{MERR}}$	
0	0	H	H	Not applicable
1	0	L	H	Correction
0	1	L	H	Correction
1	1	L	L	Interrupt
2	0	L	L	Interrupt
0	2	L	L	Interrupt

Error detection is accomplished as the 7-bit check word and the 32-bit data word from memory are applied to internal parity generators/checkers. If the parity of all seven groupings of data and check bits are correct, it is assumed that no error has occurred and both error flags will be high.

If the parity of one or more of the check groups is incorrect, an error has occurred and the proper error flag or flags will be set low. Any single error in the 32-bit data word will change the state of either three or five bits of the 7-bit check word. Any single error in the 7-bit check word changes the state of only that one bit. In either case, the single error flag ($\overline{\text{ERR}}$) will be set low while the dual error flag ($\overline{\text{MERR}}$) will remain high.

Any two-bit error will change the state of an even number of check bits. The two-bit error is not correctable since the parity tree can only identify single-bit errors. Both error flags are set low when any two-bit error is detected.

Three or more simultaneous bit errors can cause the EDAC to believe that no error, a correctable error, or an uncorrectable error has occurred and will produce erroneous results in all three cases. It should be noted that the gross-error conditions of all lows and all highs will be detected.

TABLE 4. READ, FLAG, AND CORRECT FUNCTION

MEMORY CYCLE	EDAC FUNCTION	CONTROL S1	CONTROL S0	DATA I/O	DB CONTROL $\overline{\text{OEB}}$n OR $\overline{\text{OEDB}}$	DB OUTPUT LATCH ('ALS632A, 'ALS633) $\overline{\text{LEDBO}}$	CHECK I/O	CB CONTROL $\overline{\text{OECB}}$	ERROR FLAGS $\overline{\text{ERR}}$ $\overline{\text{MERR}}$
Read	Read & flag	H	L	Input	H	X	Input	H	Enabled†
Read	Latch input data & check bits	H	H	Latched input data	H	L	Latched input check word	H	Enabled†
Read	Output corrected data & syndrome bits	H	H	Output corrected data word	L	X	Output syndrome bits‡	L	Enabled†

†See Table 3 for error description.
‡See Table 5 for error location.

As the corrected word is made available on the data I/O port (DB0 thru DB31), the check word I/O port (CB0 thru CB6) presents a 7-bit syndrome error code. This syndrome error code can be used to locate the bad memory chip. See Table 5 for syndrome decoding.

TABLE 5. SYNDROME DECODING

SYNDROME BITS							ERROR	SYNDROME BITS							ERROR	SYNDROME BITS							ERROR	SYNDROME BITS							ERROR
6	5	4	3	2	1	0		6	5	4	3	2	1	0		6	5	4	3	2	1	0		6	5	4	3	2	1	0	
L	L	L	L	L	L	L	unc	L	H	L	L	L	L	L	2-bit	H	L	L	L	L	L	L	2-bit	H	H	L	L	L	L	L	unc
L	L	L	L	L	L	H	2-bit	L	H	L	L	L	L	H	unc	H	L	L	L	L	L	H	unc	H	H	L	L	L	L	H	2-bit
L	L	L	L	L	H	L	2-bit	L	H	L	L	L	H	L	DB7	H	L	L	L	L	H	L	unc	H	H	L	L	L	H	L	2-bit
L	L	L	L	L	H	H	unc	L	H	L	L	L	H	H	2-bit	H	L	L	L	L	H	H	2-bit	H	H	L	L	L	H	H	DB23
L	L	L	L	H	L	L	2-bit	L	H	L	L	H	L	L	DB6	H	L	L	L	H	L	L	unc	H	H	L	L	H	L	L	2-bit
L	L	L	L	H	L	H	unc	L	H	L	L	H	L	H	2-bit	H	L	L	L	H	L	H	2-bit	H	H	L	L	H	L	H	DB22
L	L	L	L	H	H	L	unc	L	H	L	L	H	H	L	2-bit	H	L	L	L	H	H	L	2-bit	H	H	L	L	H	H	L	DB21
L	L	L	L	H	H	H	2-bit	L	H	L	L	H	H	H	DB5	H	L	L	L	H	H	H	unc	H	H	L	L	H	H	H	2-bit
L	L	L	H	L	L	L	2-bit	L	H	L	H	L	L	L	DB4	H	L	L	H	L	L	L	unc	H	H	L	H	L	L	L	2-bit
L	L	L	H	L	L	H	unc	L	H	L	H	L	L	H	2-bit	H	L	L	H	L	L	H	2-bit	H	H	L	H	L	L	H	DB20
L	L	L	H	L	H	L	DB31	L	H	L	H	L	H	L	2-bit	H	L	L	H	L	H	L	2-bit	H	H	L	H	L	H	L	DB19
L	L	L	H	L	H	H	2-bit	L	H	L	H	L	H	H	DB3	H	L	L	H	L	H	H	DB15	H	H	L	H	L	H	H	2-bit
L	L	L	H	H	L	L	unc	L	H	L	H	H	L	L	2-bit	H	L	L	H	H	L	L	2-bit	H	H	L	H	H	L	L	DB18
L	L	L	H	H	L	H	2-bit	L	H	L	H	H	L	H	DB2	H	L	L	H	H	L	H	unc	H	H	L	H	H	L	H	2-bit
L	L	L	H	H	H	L	2-bit	L	H	L	H	H	H	L	unc	H	L	L	H	H	H	L	DB14	H	H	L	H	H	H	L	2-bit
L	L	L	H	H	H	H	DB30	L	H	L	H	H	H	H	2-bit	H	L	L	H	H	H	H	2-bit	H	H	L	H	H	H	H	CB4
L	L	H	L	L	L	L	2-bit	L	H	H	L	L	L	L	DB0	H	L	H	L	L	L	L	unc	H	H	H	L	L	L	L	2-bit
L	L	H	L	L	L	H	unc	L	H	H	L	L	L	H	2-bit	H	L	H	L	L	L	H	2-bit	H	H	H	L	L	L	H	DB16
L	L	H	L	L	H	L	DB29	L	H	H	L	L	H	L	2-bit	H	L	H	L	L	H	L	2-bit	H	H	H	L	L	H	L	unc
L	L	H	L	L	H	H	2-bit	L	H	H	L	L	H	H	unc	H	L	H	L	L	H	H	DB13	H	H	H	L	L	H	H	2-bit
L	L	H	L	H	L	L	DB28	L	H	H	L	H	L	L	2-bit	H	L	H	L	H	L	L	2-bit	H	H	H	L	H	L	L	DB17
L	L	H	L	H	L	H	2-bit	L	H	H	L	H	L	H	DB1	H	L	H	L	H	L	H	DB12	H	H	H	L	H	L	H	2-bit
L	L	H	L	H	H	L	2-bit	L	H	H	L	H	H	L	unc	H	L	H	L	H	H	L	DB11	H	H	H	L	H	H	L	2-bit
L	L	H	L	H	H	H	DB27	L	H	H	L	H	H	H	2-bit	H	L	H	L	H	H	H	2-bit	H	H	H	L	H	H	H	CB3
L	L	H	H	L	L	L	DB26	L	H	H	H	L	L	L	2-bit	H	L	H	H	L	L	L	2-bit	H	H	H	H	L	L	L	unc
L	L	H	H	L	L	H	2-bit	L	H	H	H	L	L	H	unc	H	L	H	H	L	L	H	DB10	H	H	H	H	L	L	H	2-bit
L	L	H	H	L	H	L	2-bit	L	H	H	H	L	H	L	unc	H	L	H	H	L	H	L	DB9	H	H	H	H	L	H	L	2-bit
L	L	H	H	L	H	H	DB25	L	H	H	H	L	H	H	2-bit	H	L	H	H	L	H	H	2-bit	H	H	H	H	L	H	H	CB2
L	L	H	H	H	L	L	2-bit	L	H	H	H	H	L	L	unc	H	L	H	H	H	L	L	DB8	H	H	H	H	H	L	L	2-bit
L	L	H	H	H	L	H	DB24	L	H	H	H	H	L	H	2-bit	H	L	H	H	H	L	H	2-bit	H	H	H	H	H	L	H	CB1
L	L	H	H	H	H	L	unc	L	H	H	H	H	H	L	2-bit	H	L	H	H	H	H	L	2-bit	H	H	H	H	H	H	L	CB0
L	L	H	H	H	H	H	2-bit	L	H	H	H	H	H	H	CB6	H	L	H	H	H	H	H	CB5	H	H	H	H	H	H	H	none

CB X= error in check bit X
DB Y= error in data bit Y
2-bit = double-bit error
unc = uncorrectable multibit error

read-modify-write (byte control) operations

The 'ALS632A and 'ALS633 devices are capable of byte-write operations. The 39-bit word from memory must first be latched into the DB and CB input latches. This is easily accomplished by switching from the read and flag mode (S1 = H, S0 = L) to the latch input mode (S1 = H, S0 = H). The EDAC will then make any corrections, if necessary, to the data word and place it at the input of the output data latch. This data word must then be latched into the output data latch by taking $\overline{\text{LEDBO}}$ from a low to a high.

Byte control can now be employed on the data word through the $\overline{\text{OEB0}}$ through $\overline{\text{OEB3}}$ controls. $\overline{\text{OEB0}}$ controls DB0-DB7 (byte 0), $\overline{\text{OEB1}}$ controls DB8-DB15 (byte 1), $\overline{\text{OEB2}}$ controls DB16-DB23 (byte 2), and $\overline{\text{OEB3}}$ controls DB24-DB31 (byte 3). Placing a high on the byte control will disable the output and the user can modify the byte. If a low is placed on the byte control, then the original byte is allowed to pass onto the data bus unchanged. If the original data word is altered through byte control, a new check word must be generated before it is written back into memory. This is easily accomplished by taking control S1 and S0 low. Table 6 lists the read-modify-write functions.

TEXAS INSTRUMENTS
POST OFFICE BOX 225012 • DALLAS, TEXAS 75265

TABLE 6. READ-MODIFY-WRITE FUNCTION

MEMORY CYCLE	EDAC FUNCTION	CONTROL S1	CONTROL S0	BYTEn†	$\overline{\text{OEB}}$n†	DB OUTPUT LATCH $\overline{\text{LEDBO}}$	CHECK I/O	CB CONTROL	ERROR FLAG $\overline{\text{ERR}}$	ERROR FLAG $\overline{\text{MERR}}$
Read	Read & Flag	H	L	Input	H	X	Input	H	Enabled	
Read	Latch input data & check bits	H	H	Latched Input data	H	L	Latched input check word	H	Enabled	
Read	Latch corrected data word into output latch	H	H	Latched output data word	H	H	Hi-Z	H	Enabled	
							Output Syndrome bits	L		
Modify /write	Modify appropriate byte or bytes & generate new check word	L	L	Input modified BYTE0	H	H	Output check word	L	H	H
				Output unchanged BYTE0	L					

†$\overline{\text{OEB}}$0 controls DB0-DB7 (BYTE0), $\overline{\text{OEB}}$1 controls DB8-DB15 (BYTE1), $\overline{\text{OEB}}$3 controls DB16-DB23 (BYTE2), $\overline{\text{OEB}}$3 controls DB24-DB31 (BYTE3).

diagnostic operations

The 'ALS632A and 'ALS633 thru 'ALS635 are capable of diagnostics that allow the user to determine whether the EDAC or the memory is failing. The diagnostic function tables will help the user to see the possibilities for diagnostic control.

In the diagnostic mode (S1 = L, S0 = H), the checkword is latched into the input latch while the data input latch remains transparent. This lets the user apply various data words against a fixed known checkword. If the user applies a diagnostic data word with an error in any bit location, the $\overline{\text{ERR}}$ flag should be low. If a diagnostic data word with two errors in any bit location is applied, the $\overline{\text{MERR}}$ flag should be low. After the checkword is latched into the input latch, it can be verified by taking $\overline{\text{OECB}}$ low. This outputs the latched checkword. With the 'ALS632A and 'ALS633, the diagnostic data word can be latched into the output data latch and verified. It should be noted that the 'ALS634 and 'ALS635 do not have this pass-through capability because they do not contain an output data latch. By changing from the diagnostic mode (S1 = L, S0 = H) to the correction mode (S1 = H, S0 = H), the user can verify that the EDAC will correct the diagnostic data word. Also, the syndrome bits can be produced to verify that the EDAC pinpoints the error location. Table 7 ('ALS632A and 'ALS633) and Table 8 ('ALS634 and 'ALS635) list the diagnostic functions.

TABLE 7. 'ALS632A, 'ALS633 DIAGNOSTIC FUNCTION

EDAC FUNCTION	CONTROL S1 S0	DATA I/O	DB BYTE CONTROL $\overline{\text{OEBn}}$	DB OUTPUT LATCH $\overline{\text{LEDBO}}$	CHECK I/O	CB CONTROL $\overline{\text{OECB}}$	ERROR FLAGS $\overline{\text{ERR}}$ $\overline{\text{MERR}}$
Read & flag	H L	Input correct data word	H	X	Input correct check bits	H	H H
Latch input check word while data input latch remains transparent	L H	Input diagnostic data word†	H	L	Latched input check bits	H	Enabled
Latch diagnostic data word into output latch	L H	Input diagnostic data word†	H	H	Output latched check bits Hi-Z	L H	Enabled
Latch diagnostic data word into input latch	H H	Latched input diagnostic data word	H	H	Output syndrome bits Hi-Z	L H	Enabled
Output diagnostic data word & syndrome bits	H H	Output diagnostic data word	L	H	Output syndrome bits Hi-Z	L H	Enabled
Output corrected diagnostic data word & output syndrome bits	H H	Output corrected diagnostic data word	L	L	Output syndrome bits Hi-Z	L H	Enabled

† Diagnostic data is a data word with an error in one bit location except when testing the $\overline{\text{MERR}}$ error flag. In this case, the diagnostic data word will contain errors in two bit locations.

TABLE 8. 'ALS634, 'ALS635 DIAGNOSTIC FUNCTION

EDAC FUNCTION	CONTROL S1 S0	DATA I/O	DB CONTROL $\overline{\text{OEDB}}$	CHECK I/O	DB CONTROL $\overline{\text{OECB}}$	ERROR FLAGS $\overline{\text{ERR}}$ $\overline{\text{MERR}}$
Read & flag	H L	Input correct data word	H	Input correct check bits	H	H H
Latch input check bits while data input latch remains transparent	L H	Input diagnostic data word†	H	Latched input check bits	H	Enabled
Output input check bits	L H	Input diagnostic data word†	H	Output input check bits	L	Enabled
Latch diagnostic data into input latch	H H	Latched input diagnostic data word	H	Output syndrome bits Hi-Z	L H	Enabled
Output corrected diagnostic data word	H H	Output corrected diagnostic data word	L	Output syndrome bits Hi-Z	L H	Enabled

† Diagnostic data is a data word with an error in one bit location except when testing the $\overline{\text{MERR}}$ error flag. In this case, the diagnostic data word will contain errors in two bit locations.

'ALS632A, 'ALS633 logic diagram (positive logic)

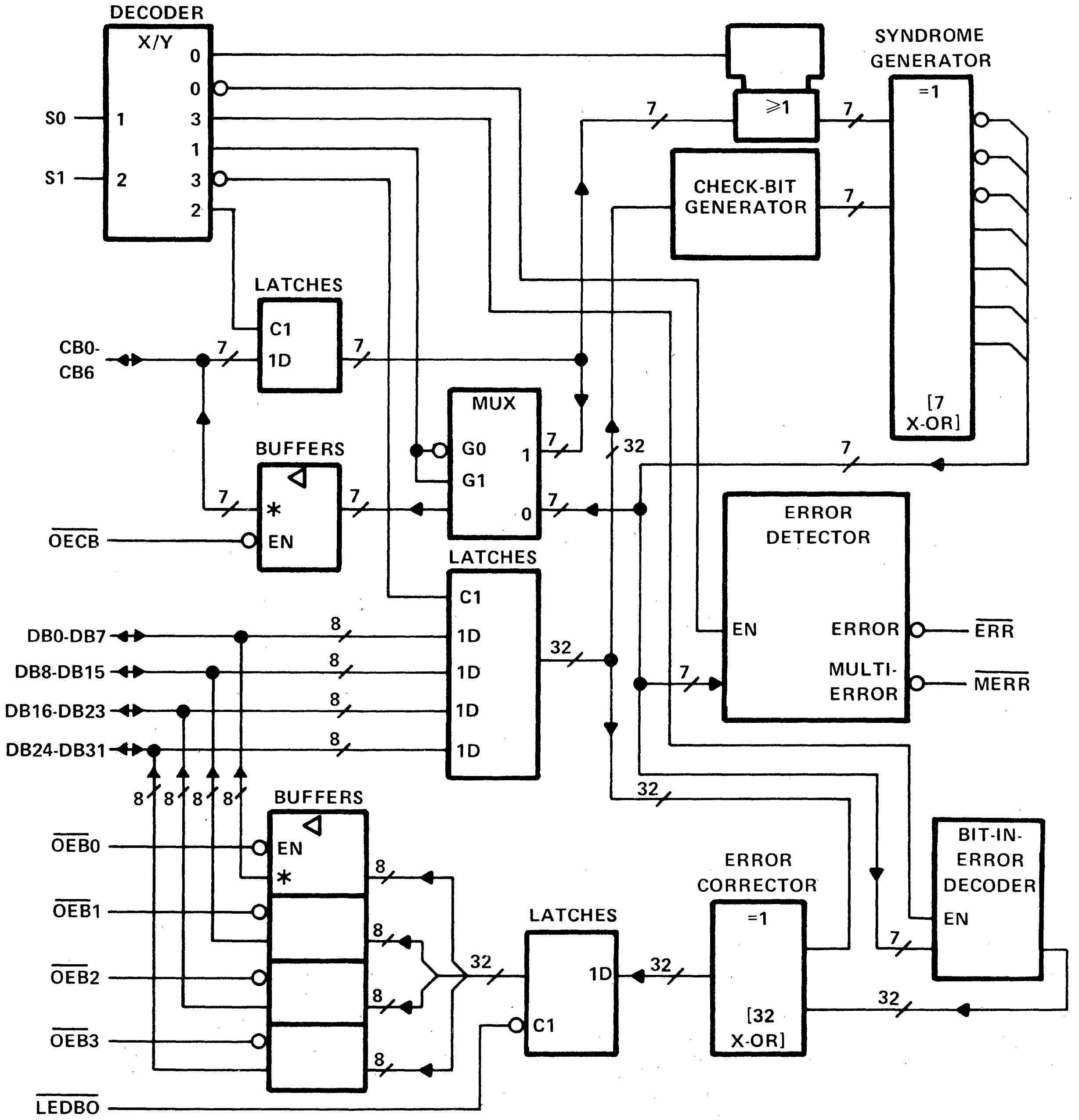
DECODER
X/Y
0
0
3
1
3
2
S0
1
S1
2
LATCHES
C1
1D
CB0-CB6
7
7
BUFFERS
*
EN
OECB
MUX
G0
G1
1
0
7
7
LATCHES
C1
1D
1D
1D
1D
DB0-DB7
DB8-DB15
DB16-DB23
DB24-DB31
8
32
BUFFERS
EN
*
OEB0
OEB1
OEB2
OEB3
LEDBO
LATCHES
1D
C1
ERROR CORRECTOR
=1
[32 X-OR]
32
≥1
CHECK-BIT GENERATOR
SYNDROME GENERATOR
=1
[7 X-OR]
ERROR DETECTOR
EN
ERROR
MULTI-ERROR
ERR
MERR
BIT-IN-ERROR DECODER
EN

*'ALS632A has 3-state (▽) check-bit and data outputs.
'ALS633 has open-collector (◇) check-bit and data outputs.

'ALS634, 'ALS635 logic diagram (positive logic)

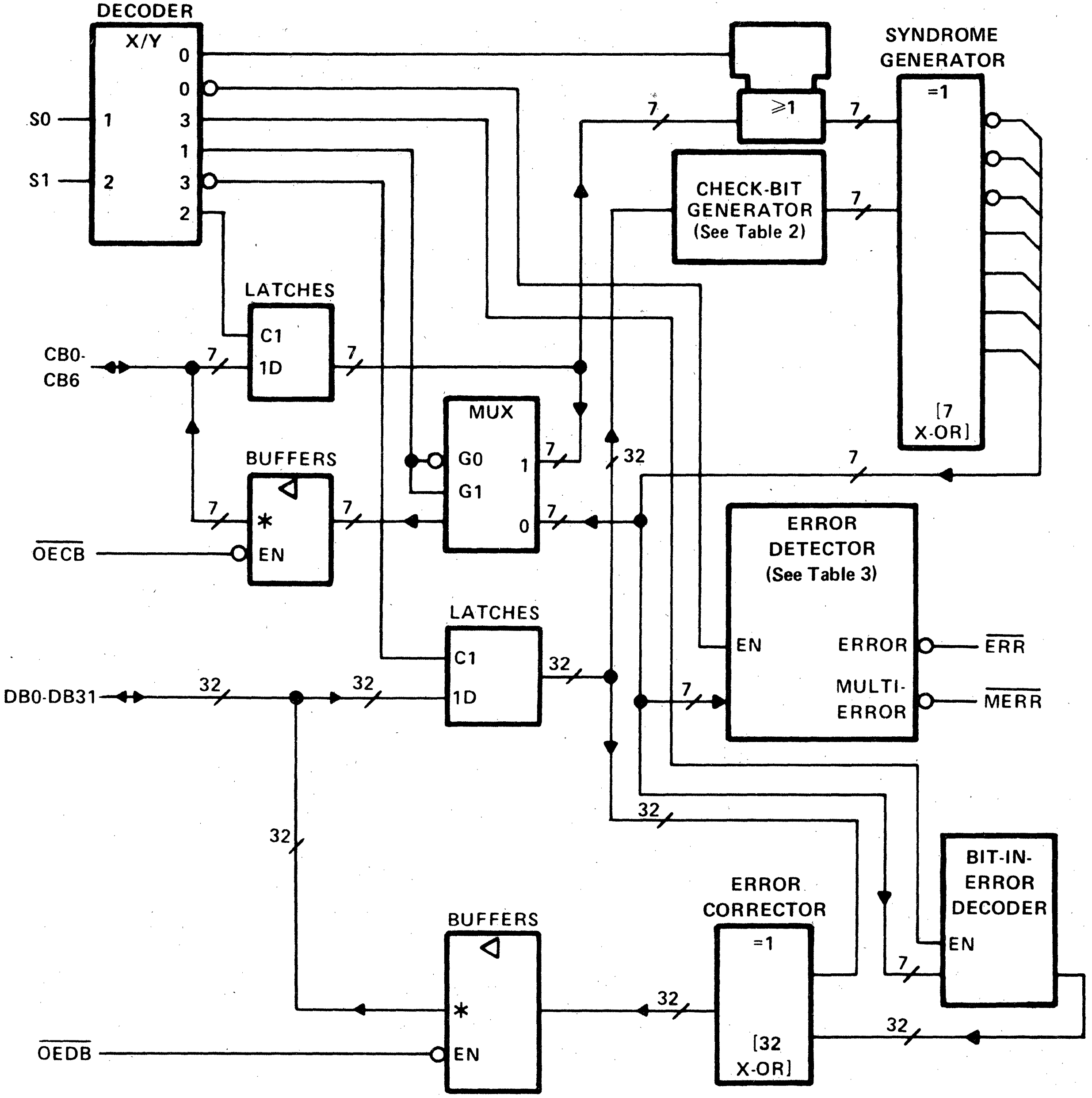
DECODER
X/Y
S0
S1
1
2
0
0
3
1
3
2
SYNDROME
GENERATOR
=1
≥1
7
7
7
CHECK-BIT
GENERATOR
(See Table 2)
LATCHES
C1
1D
CB0-
CB6
MUX
G0
G1
1
0
[7
X-OR]
BUFFERS
*
EN
OECB
32
ERROR
DETECTOR
(See Table 3)
EN
ERROR
MULTI-
ERROR
ERR
MERR
LATCHES
C1
1D
DB0-DB31
32
BIT-IN-
ERROR
DECODER
EN
ERROR
CORRECTOR
=1
[32
X-OR]
BUFFERS
*
EN
OEDB

*'ALS634 has 3-state (▽) check-bit and data outputs.
'ALS635 has open-collector (⊖) check-bit and data outputs.

absolute maximum ratings over operating free-air temperature range (unless otherwise noted)

Supply voltage, V_{CC} (see Note 1) . . . . 7 V
Input voltage: CB and DB . . . . 5.5 V
All others . . . . 7 V
Operating free-air temperature range:
SN74ALS632A, SN74ALS633 thru SN74ALS635 . . . . 0°C to 70°C
Operating case temperature range:
SN54ALS632A, SN54ALS633 thru SN54ALS635 . . . . −55°C to 125°C
Storage temperature range . . . . −65°C to 150°C

recommended operating conditions

			SN54ALS632A SN54ALS633 THRU SN54ALS635			SN74ALS632A SN74ALS633 THRU SN74ALS635			UNIT
			MIN	NOM	MAX	MIN	NOM	MAX	
V_{CC}	Supply voltage		4.5	5	5.5	4.5	5	5.5	V
V_{IH}	High-level input voltage		2			2			V
V_{IL}	Low-level input voltage				0.8			0.8	V
I_{OH}	High-level output current	$\overline{\text{ERR}}$ or $\overline{\text{MERR}}$			−0.4			−0.4	mA
		DB or CB 'ALS632A, 'ALS634			−1			−2.6	
I_{OL}	Low-level output current	$\overline{\text{ERR}}$ or $\overline{\text{MERR}}$			4			8	mA
		DB or CB			12			24	
t_w	Pulse duration	$\overline{\text{LEDBO}}$ low	25			25			ns
t_{su}	Setup time	(1) Data and check word before S0↑ (S1 = H)	15			10			ns
		(2) S0 high before $\overline{\text{LEDBO}}$↑ (S1 = H)†	45			45			
		(3) $\overline{\text{LEDBO}}$ high before the earlier of S0↓ or S1↓†	0			0			
		(4) $\overline{\text{LEDBO}}$ high before S1↑ (S0 = H)	0			0			
		(5) Diagnostic data word before S1↑ (S0 = H)	15			10			
		(6) Diagnostic check word before the later of S1↓ or S0↑	15			10			
		(7) Diagnostic data word before $\overline{\text{LEDBO}}$↑ (S1 = L and S0 = H)‡	25			20			
t_h	Hold time	(8) Read-mode, S0 low and S1 high	35			30			ns
		(9) Data and check word after S0↑ (S1 = H)	20			15			
		(10) Data word after S1↑ (S0 = H)	20			15			
		(11) Check word after the later of S1↓ or S0↑	20			15			
		(12) Diagnostic data word after $\overline{\text{LEDBO}}$↑ (S1 = L, S0 = H)‡	0			0			
t_{corr}	Correction time (see Figure 1)		65			58			ns
T_C	Operating case temperature		−55		125				°C
T_A	Operating free-air temperature					0		70	°C

†These times ensure that corrected data is saved in the output data latch.
‡These times ensure that the diagnostic data word is saved in the output data latch.

'ALS632A, 'ALS634 electrical characteristics over recommended operating temperature range (unless otherwise noted)

PARAMETER		TEST CONDITIONS		SN54ALS632A SN54ALS634			SN74ALS632A SN74ALS634			UNIT
				MIN	TYP[†]	MAX	MIN	TYP[†]	MAX	
V_{IK}		V_{CC} = 4.5 V,	I_I = −18 mA			−1.5			−1.5	V
V_{OH}	All outputs	V_{CC} = 4.5 V to 5.5 V,	I_{OH} = −0.4 mA	V_{CC}−2			V_{CC}−2			V
	DB or CB	V_{CC} = 4.5 V,	I_{OH} = −1 mA	2.4	3.3					
		V_{CC} = 4.5 V,	I_{OH} = −2.6 mA				2.4	3.2		
V_{OL}	$\overline{\text{ERR}}$ or $\overline{\text{MERR}}$	V_{CC} = 4.5 V,	I_{OL} = 4 mA		0.25	0.4		0.25	0.4	V
		V_{CC} = 4.5 V,	I_{OL} = 8 mA					0.35	0.5	
	DB or CB	V_{CC} = 4.5 V,	I_{OL} = 12 mA		0.25	0.4		0.25	0.4	
		V_{CC} = 4.5 V,	I_{OL} = 24 mA					0.35	0.5	
I_I	S0 or S1	V_{CC} = 5.5 V,	V_I = 7 V			0.1			0.1	mA
	All others	V_{CC} = 5.5 V,	V_I = 5.5 V			0.1			0.1	
I_{IH}	S0 or S1	V_{CC} = 5.5 V,	V_I = 2.7 V			20			20	μA
	All others[‡]					20			20	
I_{IL}	S0 or S1	V_{CC} = 5.5 V,	V_I = 0.4 V			−0.4			−0.4	mA
	All others[‡]					−0.1			−0.1	
I_O[§]		V_{CC} = 5.5 V,	V_O = 2.25 V	−30		−112	−30		−112	mA
I_{CC}		V_{CC} = 5.5 V,	See Note 1		150	250		150	250	mA

[†] All typical values are at V_{CC} = 5 V, T_A = 25°C.

[‡] For I/O ports (Q_A through Q_H), the parameters I_{IH} and I_{IL} include the off-state output current.

[§] The output conditions have been chosen to produce a current that closely approximates one half of the true short-circuit output current, I_{OS}.

NOTE 1: I_{CC} is measured with S0 and S1 at 4.5 V and all CB and DB pins grounded.

'ALS632A switching characteristics, V_{CC} = 4.5 V to 5.5 V, C_L = 50 pF, T_C = −55°C to 125°C for SN54ALS632A, T_A = 0°C to 70°C for SN74ALS632A

PARAMETER	FROM (INPUT)	TO (OUTPUT)	TEST CONDITIONS	SN54ALS632A		SN74ALS632A		UNIT
				MIN	MAX	MIN	MAX	
t_{pd}	DB and CB	$\overline{\text{ERR}}$	S1 = H, S0 = L, R_L = 500 Ω	10	43	10	40	ns
	DB	$\overline{\text{ERR}}$	S1 = L, S0 = H, R_L = 500 Ω	10	43	10	40	
t_{pd}	DB and CB	$\overline{\text{MERR}}$	S1 = H, S0 = L, R_L = 500 Ω	15	67	15	55	ns
	DB	$\overline{\text{MERR}}$	S1 = L, S0 = H, R_L = 500 Ω	15	67	15	55	
t_{pd}	S0↓ and S1↓	CB	R1 = R2 = 500 Ω	10	60	10	48	ns
t_{pd}	DB	CB	S1 = L, S0 = L, R1 = R2 = 500 Ω	10	60	10	48	ns
t_{pd}	$\overline{\text{LEDBO}}$↓	DB	S1 = X, S0 = H, R1 = R2 = 500 Ω	7	35	7	30	ns
t_{pd}	S1↑	CB	S0 = H, R1 = R2 = 500 Ω	10	60	10	50	ns
t_{en}	$\overline{\text{OECB}}$↓	CB	S0 = H, S1 = X, R1 = R2 = 500 Ω	2	30	2	25	ns
t_{dis}	$\overline{\text{OECB}}$↑	CB	S0 = H, S1 = X, R1 = R2 = 500 Ω	2	30	2	25	ns
t_{en}	$\overline{\text{OEB0}}$ thru $\overline{\text{OEB3}}$↓	DB	S0 = H, S1 = X, R1 = R2 = 500 Ω	2	30	2	25	ns
t_{dis}	$\overline{\text{OEB0}}$ thru $\overline{\text{OEB3}}$↑	DB	S0 = H, S1 = X, R1 = R2 = 500 Ω	2	30	2	25	ns

PRODUCTION DATA documents contain information current as of publication date. Products conform to specifications per the terms of Texas Instruments standard warranty. Production processing does not necessarily include testing of all parameters.

TEXAS INSTRUMENTS
POST OFFICE BOX 225012 • DALLAS, TEXAS 75265

SN54ALS646 THRU SN54ALS649, SN54AS646, SN54AS648
SN74ALS646 THRU SN74ALS649, SN74AS646, SN74AS648
OCTAL BUS TRANSCEIVERS AND REGISTERS

D2661, DECEMBER 1983–NOVEMBER 1985

- Independent Registers for A and B Buses
- Multiplexed Real-Time and Stored Data
- Choice of True or Inverting Data Paths
- Choice of 3-State or Open-Collector Outputs
- Included Among the Package Options Are Compact 24-pin 300-mil Wide DIPs and Both 28-pin Plastic and Ceramic Chip Carriers
- Dependable Texas Instruments Quality and Reliability

DEVICE	OUTPUT	LOGIC
'ALS646, 'AS646	3-State	True
'ALS647	Open-Collector	True
'ALS648, 'AS648	3-State	Inverting
'ALS649	Open-Collector	Inverting

SN54ALS', SN54AS' . . . JT PACKAGE
SN74ALS', SN74AS' . . . DW OR NT PACKAGE
(TOP VIEW)

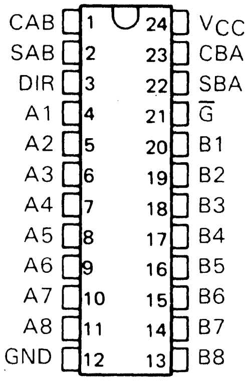

SN54ALS', SN54AS' . . . FK PACKAGE
SN74ALS', SN74AS' . . . FN PACKAGE
(TOP VIEW)

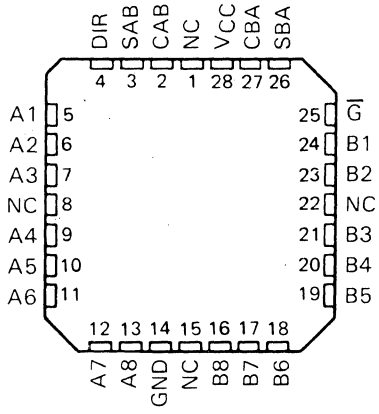

NC – No internal connection

description

These devices consist of bus transceiver circuits, with 3-state or open-collector outputs, D-type flip-flops, and control circuitry arranged for multiplexed transmission of data directly from the data bus or from the internal storage registers. Data on the A or B bus will be clocked into the registers on the low-to-high transition of the appropriate clock pin (CAB or CBA). The following examples demonstrate the four fundamental bus-management functions that can be performed with the octal bus transceivers and registers.

Enable ($\overline{G}$) and direction (DIR) pins are provided to control the transceiver functions. In the transceiver mode, data present at the high-impedance port may be stored in either register or in both. The select controls (SAB and SBA) can multiplex stored and real-time (transparent mode) data. The circuitry used for select control will eliminate the typical decoding glitch which occurs in a multiplexer during the transition between stored and real-time data. The direction control determines which bus will receive data when enable $\overline{G}$ is active (low). In the isolation mode (control $\overline{G}$ high), A data may be stored in one register and/or B data may be stored in the other register.

When an output function is disabled, the input function is still enabled and may be used to store and transmit data. Only one of the two buses, A or B, may be driven at a time.

The -1 versions of the SN74ALS' parts are identical to the standard versions except that the recommended maximum I_{OL} is increased to 48 milliamperes. There are no -1 versions of the SN54ALS' parts.

The SN54' family is characterized for operation over the full military temperature range of −55°C to 125°C. The SN74' family is characterized for operation from 0°C to 70°C.

PRODUCTION DATA documents contain information current as of publication date. Products conform to specifications per the terms of Texas Instruments standard warranty. Production processing does not necessarily include testing of all parameters.

Copyright © 1982, Texas Instruments Incorporated

TEXAS INSTRUMENTS
POST OFFICE BOX 225012 • DALLAS, TEXAS 75265

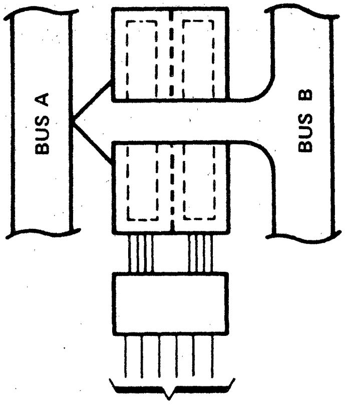

(21) G	(3) DIR	(1) CAB	(23) CBA	(2) SAB	(22) SBA
L	L	X	X	X	L

REAL-TIME TRANSFER
BUS B TO BUS A

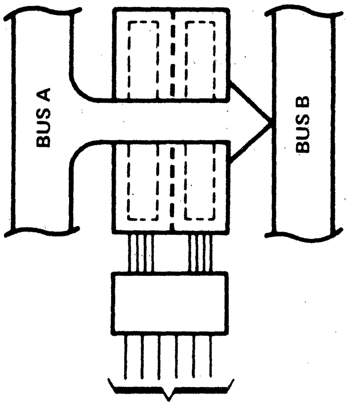

(21) G	(3) DIR	(1) CAB	(23) CBA	(2) SAB	(22) SBA
L	H	X	X	L	X

REAL-TIME TRANSFER
BUS A TO BUS B

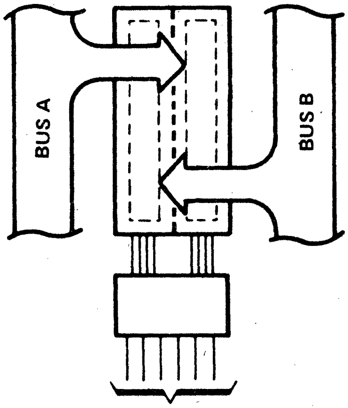

(21) G	(3) DIR	(1) CAB	(23) CBA	(2) SAB	(22) SBA
X	X	↑	X	X	X
X	X	X	↑	X	X
H	X	↑	↑	X	X

STORAGE FROM
A, B, OR A AND B

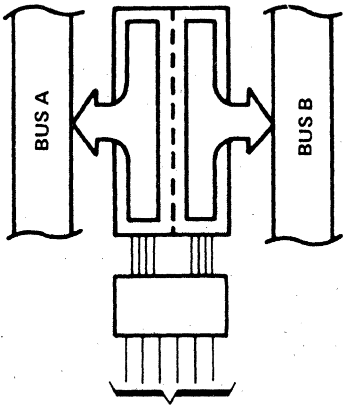

(21) G	(3) DIR	(1) CAB	(23) CBA	(2) SAB	(22) SBA
L	L	X	HorL	X	H
L	H	HorL	X	H	X

TRANSFER
STORED DATA
TO A OR B

FUNCTION TABLE

INPUTS						DATA I/O		OPERATION OR FUNCTION	
G	DIR	CAB	CBA	SAB	SBA	A1 THRU A8	B1 THRU B8	'ALS646, 'ALS647 'AS646	'ALS648, 'ALS649 'AS648
X	X	↑	X	X	X	Input	Unspecified[†]	Store A, B unspecified[†]	Store A, B unspecified[†]
X	X	X	↑	X	X	Unspecified[†]	Input	Store B, A unspecified[†]	Store B, A unspecified[†]
H	X	↑	↑	X	X	Input	Input	Store A and B Data	Store A and B Data
H	X	H or L	H or L	X	X			Isolation, hold storage	Isolation, hold storage
L	L	X	X	X	L	Output	Input	Real-Time B Data to A Bus	Real-Time $\overline{B}$ Data to A Bus
L	L	X	H or L	X	H			Stored B Data to A Bus	Stored $\overline{B}$ Data to A Bus
L	H	X	X	L	X	Input	Output	Real-Time A Data to B Bus	Real-Time $\overline{A}$ Data to B Bus
L	H	H or L	X	H	X			Stored A Data to B Bus	Store $\overline{A}$ Data to B Bus

[†] The data output functions may be enabled or disabled by various signals at the $\overline{G}$ and DIR inputs. Data input functions are always enabled, i.e., data at the bus pins will be stored on every low-to-high transition on the clock inputs.

functional block diagrams (positive logic)

'ALS646, 'AS646, 'ALS647

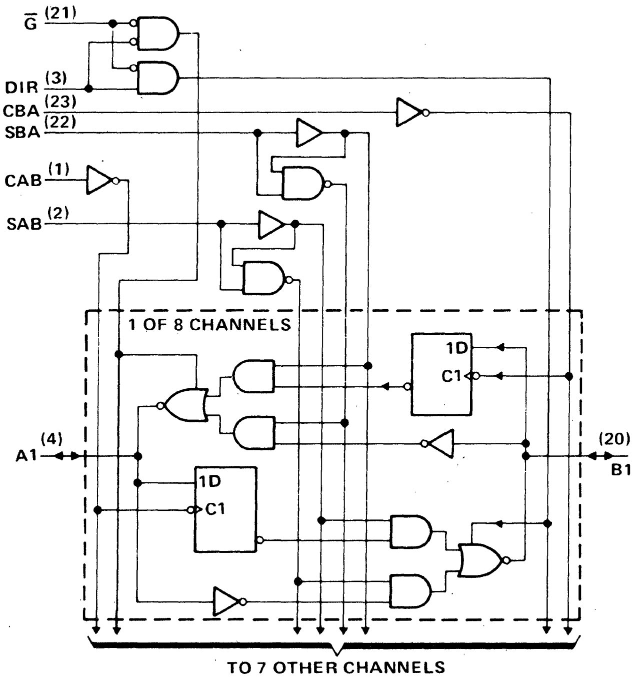
$\overline{G}$ (21)
DIR (3)
CBA (23)
SBA (22)
CAB (1)
SAB (2)
1 OF 8 CHANNELS
1D
C1
1D
C1
A1 (4)
(20) B1
TO 7 OTHER CHANNELS

'ALS648, 'AS648, 'ALS649

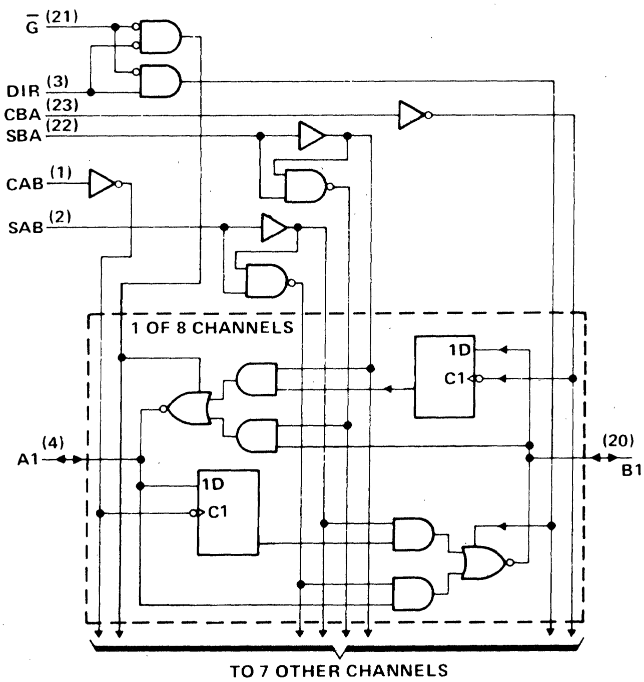
$\overline{G}$ (21)
DIR (3)
CBA (23)
SBA (22)
CAB (1)
SAB (2)
1 OF 8 CHANNELS
1D
C1
1D
C1
A1 (4)
(20) B1
TO 7 OTHER CHANNELS

Pin numbers shown are for DW, JT, and NT packages.

logic symbols†

'ALS646, 'AS646

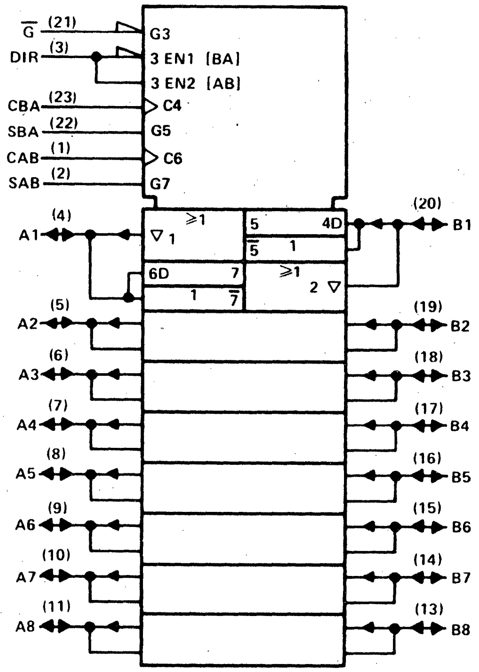
G (21)
DIR (3)
CBA (23)
SBA (22)
CAB (1)
SAB (2)
G3
3 EN1 [BA]
3 EN2 [AB]
C4
G5
C6
G7
≥1
▽ 1
5
4D
5̄
1
6D
7
1
7̄
≥1
2 ▽
A1 (4)
A2 (5)
A3 (6)
A4 (7)
A5 (8)
A6 (9)
A7 (10)
A8 (11)
(20) B1
(19) B2
(18) B3
(17) B4
(16) B5
(15) B6
(14) B7
(13) B8

'ALS647

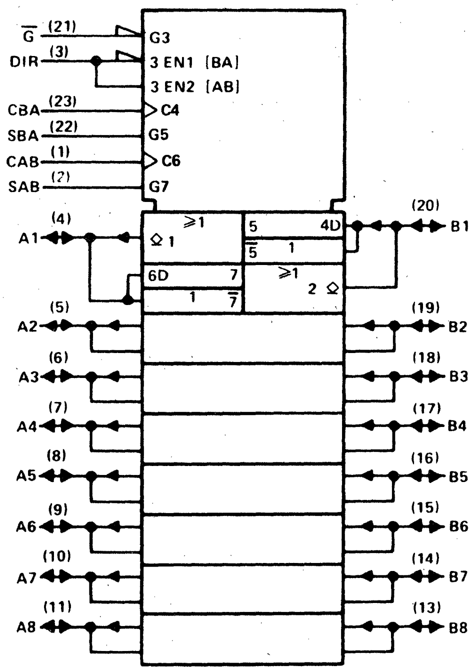
G (21)
DIR (3)
CBA (23)
SBA (22)
CAB (1)
SAB (2)
G3
3 EN1 [BA]
3 EN2 [AB]
C4
G5
C6
G7
≥1
◇ 1
5
4D
5̄
1
6D
7
1
7̄
≥1
2 ◇
A1 (4)
A2 (5)
A3 (6)
A4 (7)
A5 (8)
A6 (9)
A7 (10)
A8 (11)
(20) B1
(19) B2
(18) B3
(17) B4
(16) B5
(15) B6
(14) B7
(13) B8

'ALS648, 'AS648

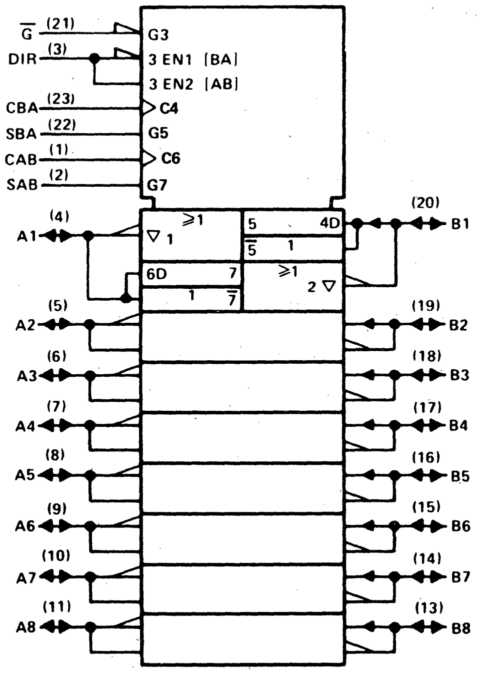
G (21)
DIR (3)
CBA (23)
SBA (22)
CAB (1)
SAB (2)
G3
3 EN1 [BA]
3 EN2 [AB]
C4
G5
C6
G7
≥1
▽ 1
5
4D
5̄
1
6D
7
1
7̄
≥1
2 ▽
A1 (4)
A2 (5)
A3 (6)
A4 (7)
A5 (8)
A6 (9)
A7 (10)
A8 (11)
(20) B1
(19) B2
(18) B3
(17) B4
(16) B5
(15) B6
(14) B7
(13) B8

'ALS649

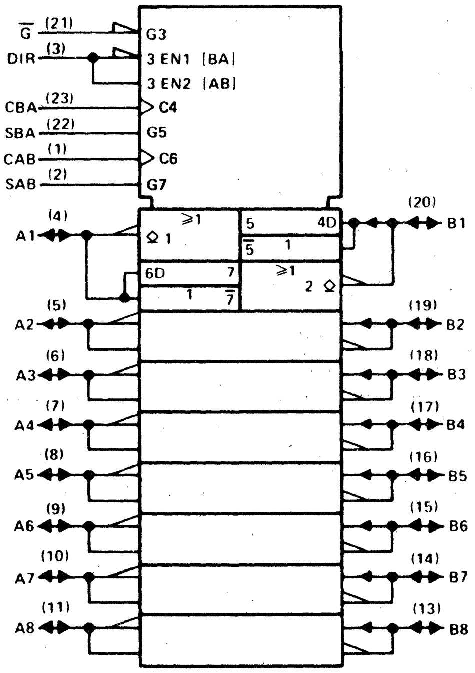
G (21)
DIR (3)
CBA (23)
SBA (22)
CAB (1)
SAB (2)
G3
3 EN1 [BA]
3 EN2 [AB]
C4
G5
C6
G7
≥1
◇ 1
5
4D
5̄
1
6D
7
1
7̄
≥1
2 ◇
A1 (4)
A2 (5)
A3 (6)
A4 (7)
A5 (8)
A6 (9)
A7 (10)
A8 (11)
(20) B1
(19) B2
(18) B3
(17) B4
(16) B5
(15) B6
(14) B7
(13) B8

Pin numbers shown are for DW, JT, and NT packages.

†These symbols are in accordance with ANSI/IEEE Std 91-1984 and IEC Publication 617-12.

absolute maximum ratings over operating free-air temperature range (unless otherwise noted)

Supply voltage, V_{CC} . . . . 7 V
Input voltage: Control inputs . . . . 7 V
I/O ports . . . . 5.5 V
Operating free-air temperature range: SN54ALS646 . . . . −55°C to 125°C
SN74ALS646 . . . . 0°C to 70°C
Storage temperature range . . . . −65°C to 150°C

recommended operating conditions

		SN54ALS646			SN74ALS646			UNIT
		MIN	NOM	MAX	MIN	NOM	MAX	
V_{CC}	Supply voltage	4.5	5	5.5	4.5	5	5.5	V
V_{IH}	High-level input voltage	2			2			V
V_{IL}	Low-level input voltage			0.8			0.8	V
I_{OH}	High-level output current			−12			−15	mA
I_{OL}	Low-level output current			12			24	mA
							48[†]	
f_{clock}	Clock frequency	0		35	0		40	MHz
t_w	Pulse duration, clocks high or low	14.5			12.5			ns
t_{su}	Setup time, A before CAB↑ or B before CBA↑	15			10			ns
t_h	Hold time, A after CAB↑ or B after CBA↑	0			0			ns
T_A	Operating free-air temperature	−55		125	0		70	°C

[†] The extended condition applies if V_{CC} is maintained between 4.75 V and 5.25 V. The 48-mA limit applies for the SN74ALS646-1 only.

electrical characteristics over recommended operating free-air temperature range (unless otherwise noted)

PARAMETER		TEST CONDITIONS		SN54ALS646			SN74ALS646			UNIT
				MIN	TYP[‡]	MAX	MIN	TYP[‡]	MAX	
V_{IK}		V_{CC} = 4.5 V,	I_I = −18 mA			−1.2			1.2	V
V_{OH}		V_{CC} = 4.5 V to 5.5 V,	I_{OH} = 0.4 mA	V_{CC} 2			V_{CC} 2			V
		V_{CC} = 4.5 V,	I_{OH} = −3 mA	2.4	3.2		2.4	3.2		
		V_{CC} = 4.5 V,	I_{OH} = −12 mA	2						
		V_{CC} = 4.5 V,	I_{OH} = 15 mA				2			
V_{OL}		V_{CC} = 4.5 V,	I_{OL} = 12 mA		0.25	0.4		0.25	0.4	V
		V_{CC} = 4.5 V, (I_{OL} = 48 mA for −1 version)	I_{OL} = 24 mA					0.35	0.5	
I_I	Control inputs	V_{CC} = 5.5 V,	V_I = 7 V			0.1			0.1	mA
	A or B ports	V_{CC} = 5.5 V,	V_I = 5.5 V			0.1			0.1	
I_{IH}	Control inputs	V_{CC} = 5.5 V,	V_I = 2.7 V			20			20	μA
	A or B ports[§]					20			20	
I_{IL}	Control inputs	V_{CC} = 5.5 V,	V_I = 0.4 V			−0.2			−0.2	mA
	A or B ports[§]					−0.2			−0.2	
I_O[¶]		V_{CC} = 5.5 V,	V_O = 2.25 V	−30		−112	−30		−112	mA
I_{CC}		V_{CC} = 5.5 V	Outputs high		47	76		47	76	mA
			Outputs low		55	88		55	88	
			Outputs disabled		55	88		55	88	

[‡] All typical values are at V_{CC} = 5 V, T_A = 25°C

[§] For I/O ports, the parameters I_{IH} and I_{IL} include the off-state output current.

[¶] The output conditions have been chosen to produce a current that closely approximates one half of the true short-circuit output current, I_{OS}.

SN54ALS818, SN54ALS819
SN74ALS818, SN74ALS819
8-BIT DIAGNOSTICS/PIPELINE REGISTERS

D2298, NOVEMBER 1985

- High-Speed 8-Bit Parallel Output Register
- Serial Shadow Register with Right-Shift Only
- 'ALS818 Performs Parallel-to-Serial and Serial-to-Parallel Conversion
- Designed Specifically for Use in Applications such as:
  - Write Control Store ('ALS818)
  - Serial Shadow-Register Diagnostics
- 'ALS819 Provides Even-Parity Output
- Low Power Dissipation . . . 215 mW Typical
- 'ALS818 is Functionally Equivalent to AMD AM29818
- Package Options Include Both Plastic and Ceramic Chip Carriers in Addition to Plastic and Ceramic DIPs
- Dependable Texas Instruments Quality and Reliability

description

The 'ALS818 and 'ALS819 are 8-bit output registers with on-chip shadow register for use in applications such as write control store and shadow register diagnostics.

The output registers of the 'ALS818 and 'ALS819 are loaded in parallel from either the I/O port (DQ0—DQ7) or the shadow register. The shadow register of the 'ALS818 is loaded serially from either the I/O port (Y0—Y7) or the output register. The 'ALS819 shadow register is loaded serially from the I/O port (DQ0—DQ7). In addition, the 'ALS819 provides a Parity-Even (PE) output, which monitors parity of the output register. Operation of these devices is controlled by the Mode and SDI inputs as shown in the function table.

The SN54ALS818 and SN54ALS819 are characterized for operation over the full military temperature range of −55°C to 125°C. The SN74ALS818 and SN74ALS819 are characterized for operation from 0°C to 70°C.

SN54ALS818 . . . JT PACKAGE
SN74ALS818 . . . DW OR NT PACKAGE
(TOP VIEW)

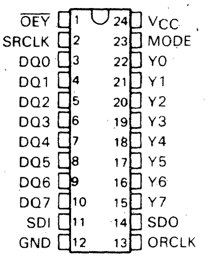
$\overline{OEY}$ 1
SRCLK 2
DQ0 3
DQ1 4
DQ2 5
DQ3 6
DQ4 7
DQ5 8
DQ6 9
DQ7 10
SDI 11
GND 12
24 VCC
23 MODE
22 Y0
21 Y1
20 Y2
19 Y3
18 Y4
17 Y5
16 Y6
15 Y7
14 SDO
13 ORCLK

SN54ALS818 . . . FK PACKAGE
SN74ALS818 . . . FN PACKAGE
(TOP VIEW)

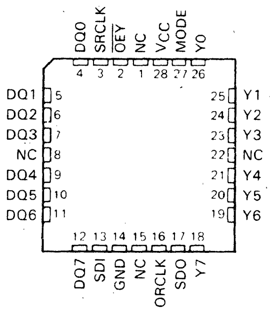
DQ0 SRCLK $\overline{OEY}$ NC VCC MODE Y0
4 3 2 1 28 27 26
DQ1 5
DQ2 6
DQ3 7
NC 8
DQ4 9
DQ5 10
DQ6 11
25 Y1
24 Y2
23 Y3
22 NC
21 Y4
20 Y5
19 Y6
12 13 14 15 16 17 18
DQ7 SDI GND NC ORCLK SDO Y7

SN54ALS819 . . . JT PACKAGE
SN74ALS819 . . . DW OR NT PACKAGE
(TOP VIEW)

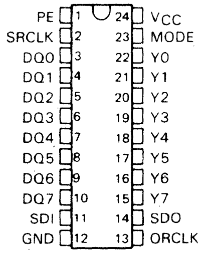
PE 1
SRCLK 2
DQ0 3
DQ1 4
DQ2 5
DQ3 6
DQ4 7
DQ5 8
DQ6 9
DQ7 10
SDI 11
GND 12
24 VCC
23 MODE
22 Y0
21 Y1
20 Y2
19 Y3
18 Y4
17 Y5
16 Y6
15 Y7
14 SDO
13 ORCLK

SN54ALS819 . . . FK PACKAGE
SN74ALS819 . . . FN PACKAGE
(TOP VIEW)

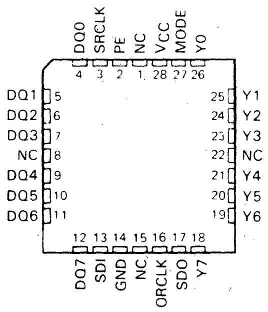
DQ0 SRCLK PE NC VCC MODE Y0
4 3 2 1 28 27 26
DQ1 5
DQ2 6
DQ3 7
NC 8
DQ4 9
DQ5 10
DQ6 11
25 Y1
24 Y2
23 Y3
22 NC
21 Y4
20 Y5
19 Y6
12 13 14 15 16 17 18
DQ7 SDI GND NC ORCLK SDO Y7

NC—No internal connection

PRODUCT PREVIEW documents contain information on products in the formative or design phase of development. Characteristic data and other specifications are design goals. Texas Instruments reserves the right to change or discontinue these products without notice.

Copyright © 1985, Texas Instruments Incorporated

TEXAS INSTRUMENTS
POST OFFICE BOX 225012 • DALLAS, TEXAS 75265

'ALS818 FUNCTION TABLE

INPUTS					OUTPUT AND I/O			OPERATION OR FUNCTION
MODE	$\overline{\text{OEY}}$	SDI	SRCLK	ORCLK	SDO	Y0–Y7	DQ0–DQ7	
L	X	X	↑	X	SR7	–	HI-Z	Serial input, shift right, disable DQ0–DQ7
H	H	L	↑	X	SDI	INPUT	HI-Z	Parallel load shadow register from Y0–Y7, disable DQ0–DQ7
H	L	L	↑	↑	SDI	OUTPUT	HI-Z	Parallel load shadow register from output register, disable DQ0–DQ7
L	X	X	X	↑	SR7	–	INPUT†	Load output register from DQ0–DQ7
L	X	X	↑	↑	SR7	–	INPUT†	Load output register from DQ0–DQ7 while shifting shadow register
H	X	X	↑	↑	SDI	–	–	Load output register from shadow register
H	X	X	X	X	SDI	–	–	Serial data in to serial data out
H	L	L	↑	↑	SDI	OUTPUT	HI-Z	Exchange data between registers, DQ0–DQ7 disabled
H	X	H	X	X	SDI	–	–	Hold shadow register, transitions on SRCLK do not effect shadow register
H	X	H	↑	X	SDI	–	OUTPUT	Enable DQ0–DQ7 for parallel shadow register output

†The DQ0–DQ7 outputs must be disabled before applying data to DQ0–DQ7.

'ALS819 FUNCTION TABLE

INPUTS				OUTPUT AND I/O			OPERATION OR FUNCTION
MODE	SDI	SRCLK	ORCLK	SDO	Y0–Y7 PE	DQ0–DQ7	
L	X	↑	X	SR7	OUTPUT	HI-Z	Serial input, shift right
H	L	↑	X	SDI (L)	OUTPUT	INPUT	Parallel load shadow register from DQ0–DQ7
H	L	↑	↑	SDI (L)	OUTPUT	INPUT	Parallel load shadow register and output register from DQ0–DQ7
L X	X L	X X	↑ ↑	SR7	OUTPUT	INPUT	Load output register from DQ0–DQ7
L	X	↑	↑	SR7	OUTPUT	INPUT	Load output register from DQ0–DQ7 while shifting shadow register
H	H	↑	↑	SDI (H)	OUTPUT	OUTPUT	Load output register from shadow register
H	X	X	X	SDI	OUTPUT	–	Serial data in to serial data out
H	H	X	X	SDI (H)	OUTPUT	OUTPUT HOLD	Hold shadow register, Enable DQ0–DQ7, transitions on SRCLK ignored
L X	X L	X X	X X	–	OUTPUT	HI-Z	Disable DQ0–DQ7 outputs

logic diagrams (positive logic)

'ALS818

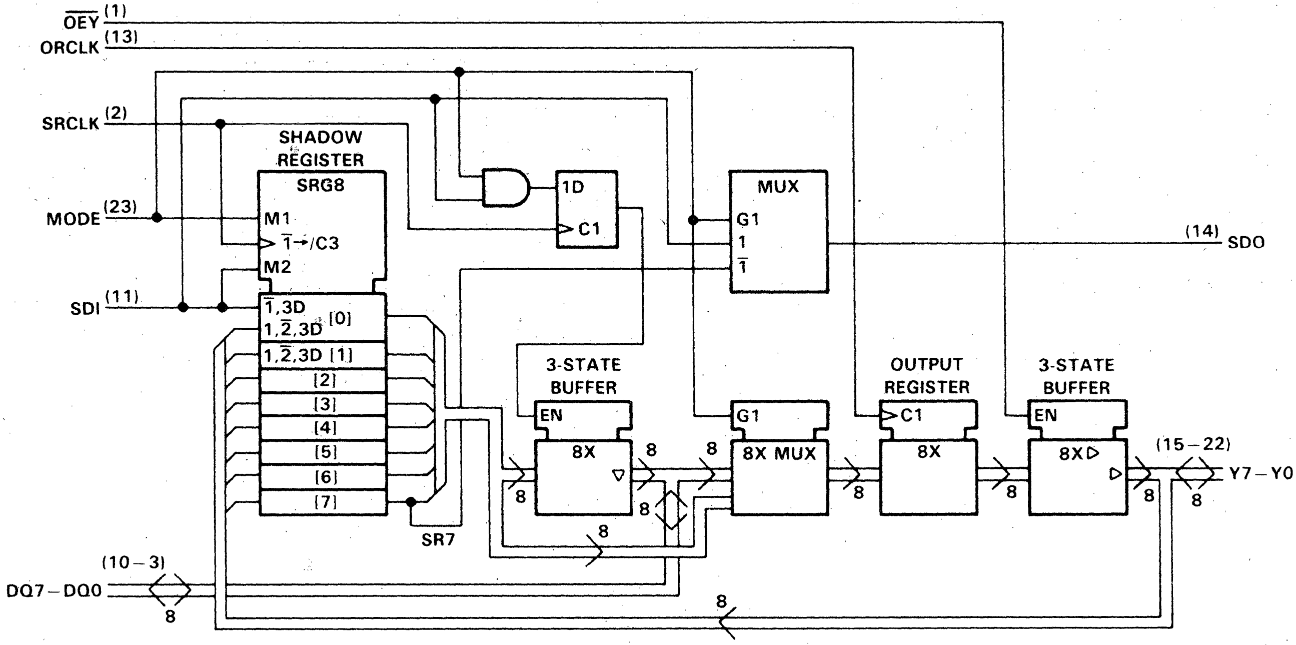
OEY (1)
ORCLK (13)
SRCLK (2)
MODE (23)
SDI (11)
DQ7–DQ0 (10–3)
SHADOW REGISTER
SRG8
M1
1̄→/C3
M2
1̄,3D
1,2̄,3D [0]
1,2̄,3D [1]
[2]
[3]
[4]
[5]
[6]
[7]
SR7
1D
C1
MUX
G1
1
1̄
(14) SDO
3-STATE BUFFER
EN
8X
G1
8X MUX
OUTPUT REGISTER
C1
8X
3-STATE BUFFER
EN
8X ▷
(15–22)
Y7–Y0
8

'ALS819

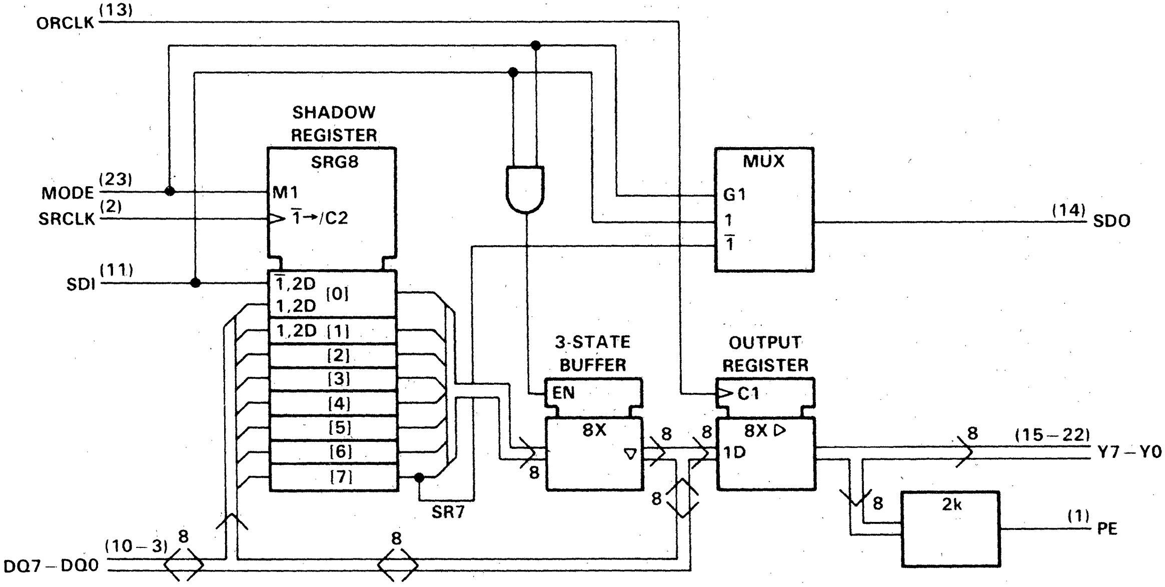
ORCLK (13)
MODE (23)
SRCLK (2)
SDI (11)
DQ7–DQ0 (10–3)
SHADOW REGISTER
SRG8
M1
1̄→/C2
1̄,2D
1,2D [0]
1,2D [1]
[2]
[3]
[4]
[5]
[6]
[7]
SR7
MUX
G1
1
1̄
(14) SDO
3-STATE BUFFER
EN
8X
OUTPUT REGISTER
C1
8X ▷
1D
(15–22)
Y7–Y0
2k
(1) PE
8

'ALS818 gate-level logic diagram (positive logic)

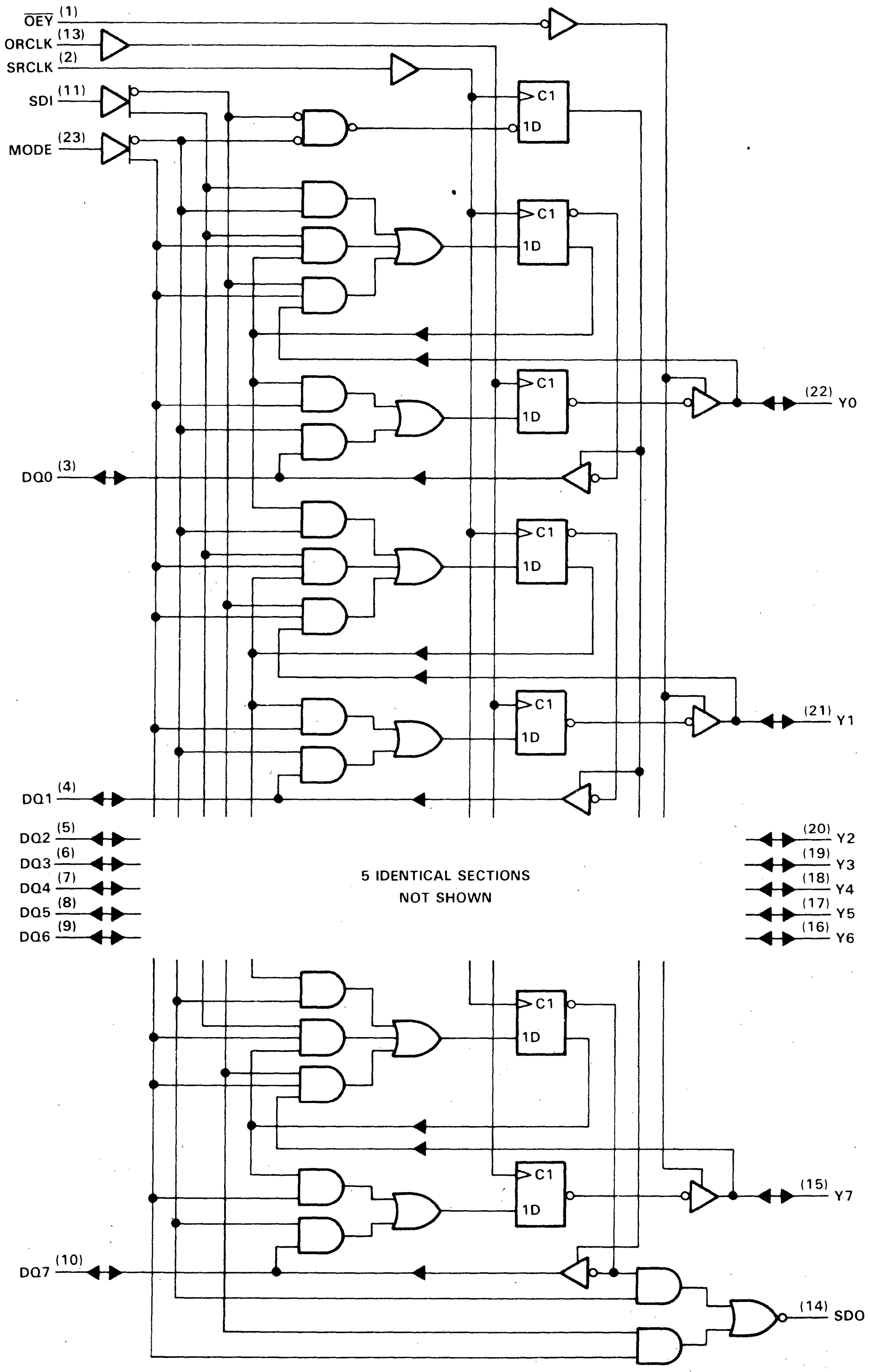
OEY (1)
ORCLK (13)
SRCLK (2)
SDI (11)
MODE (23)
C1
1D
(22) Y0
DQ0 (3)
(21) Y1
DQ1 (4)
DQ2 (5)
DQ3 (6)
DQ4 (7)
DQ5 (8)
DQ6 (9)
5 IDENTICAL SECTIONS
NOT SHOWN
(20) Y2
(19) Y3
(18) Y4
(17) Y5
(16) Y6
(15) Y7
DQ7 (10)
(14) SDO

Pin numbers shown are for DW, JT, and NT packages.

'ALS819 gate-level logic diagram (positive logic)

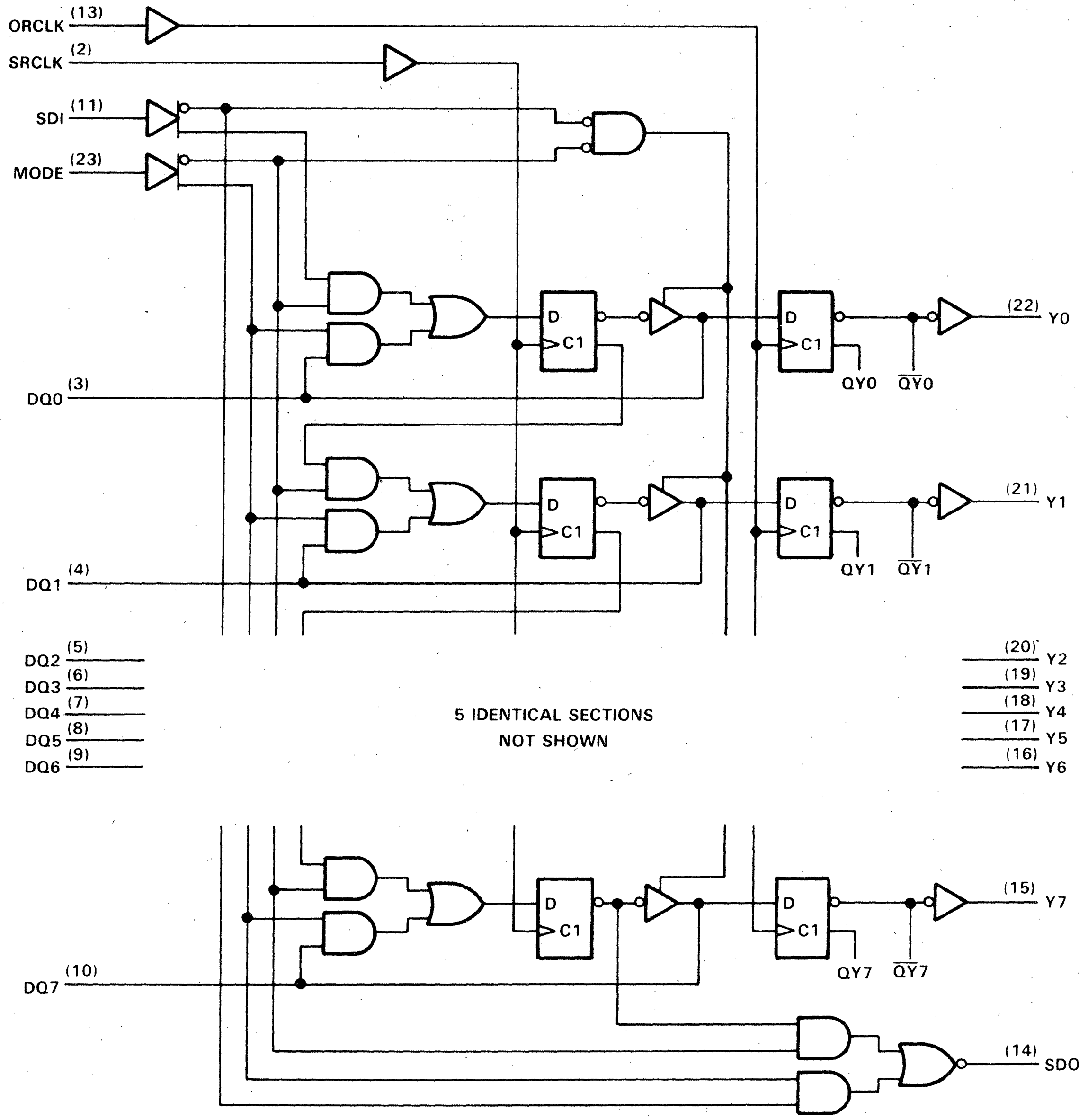
ORCLK (13)
SRCLK (2)
SDI (11)
MODE (23)
D
C1
DQ0 (3)
(22) Y0
QY0
$\overline{QY0}$
DQ1 (4)
(21) Y1
QY1
$\overline{QY1}$
DQ2 (5)
DQ3 (6)
DQ4 (7)
DQ5 (8)
DQ6 (9)
5 IDENTICAL SECTIONS
NOT SHOWN
(20) Y2
(19) Y3
(18) Y4
(17) Y5
(16) Y6
DQ7 (10)
(15) Y7
QY7
$\overline{QY7}$
(14) SDO

Pin numbers shown are for DW, JT, and NT packages.

'ALS819 gate-level logic diagram (positive logic) (continued)

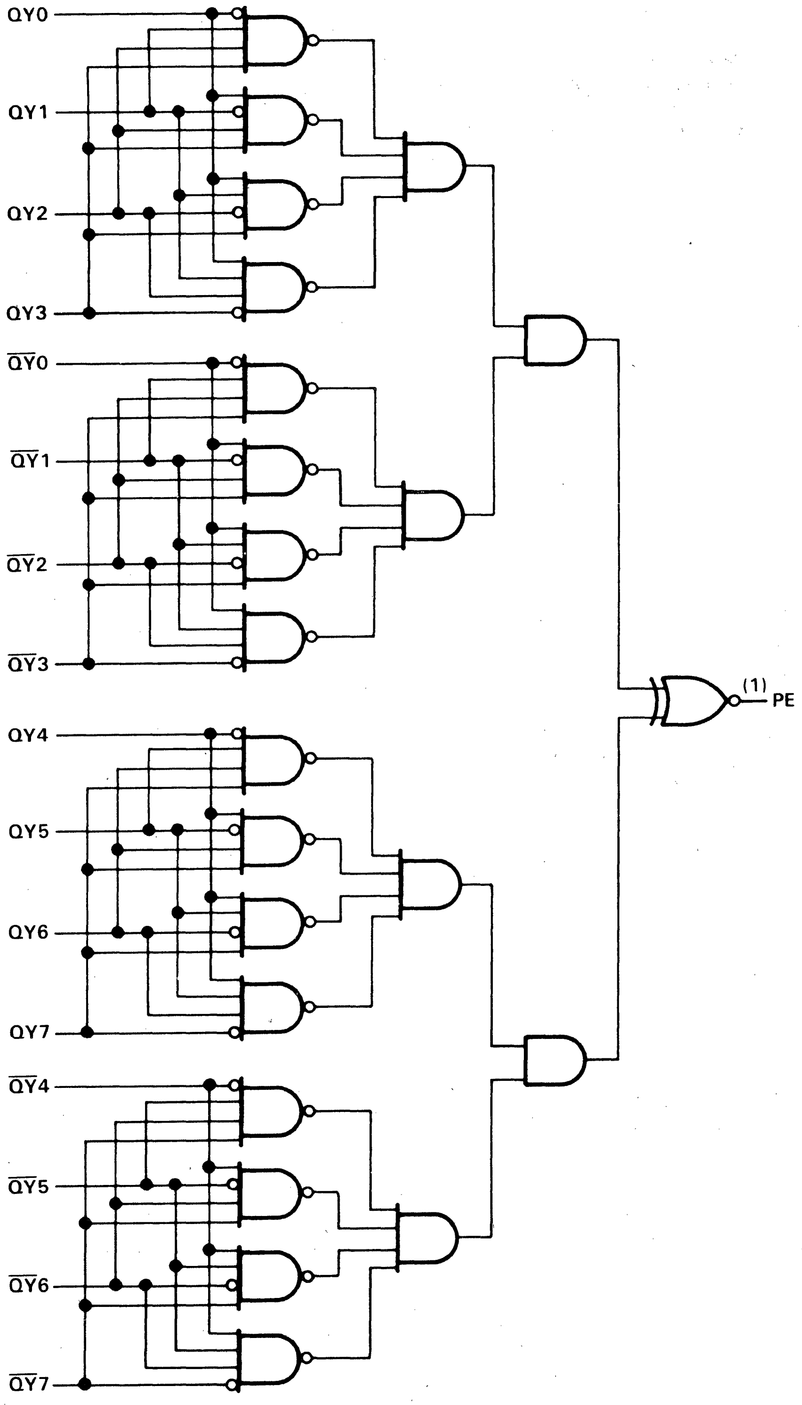
QY0
QY1
QY2
QY3
$\overline{QY0}$
$\overline{QY1}$
$\overline{QY2}$
$\overline{QY3}$
QY4
QY5
QY6
QY7
$\overline{QY4}$
$\overline{QY5}$
$\overline{QY6}$
$\overline{QY7}$
(1)
PE

Pin numbers shown are for DW, JT, and NT packages.

SN54AS870, SN54AS871, SN74AS870, SN74AS871
DUAL 16-BY-4 REGISTER FILES

D2661, DECEMBER 1982 REVISED MARCH 1985

- 'AS870 in Compact 24-Pin, 300-mil DIP and Both Plastic and Ceramic 28-Pin Chip Carriers
- 'AS871 in 28-Pin 600-mil DIP and Both Plastic and Ceramic Chip Carriers
- 3-State Buffer-Type Outputs Drive Bus Lines Directly
- Typical Access Time is 11 ns
- Each Register File Has Individual Write Enable Controls and Address Lines
- Designed Specifically for Multibus Architecture and Overlapping File Operations
- Prioritized B Input Port Prevents Write Conflicts During Dual Input Mode
- Dependable Texas Instruments Quality and Reliability

description

These devices feature two 16-word by 4-bit register files. Each register file has individual write-enable controls and address lines. The 'AS870 has two 4-bit data I/O ports (DQA1-DQA4 and DQB1-DQB4). The 'AS871 has one 4-bit data I/O port (DQB1-DQB4) with the other data port having individual data inputs (DA1-DA4) and data outputs (QA1-QA4). The data I/O ports can output to Bus A and Bus B, receive input from Bus A and Bus B, receive input from Bus A and output to Bus B, or output to Bus A and receive input from Bus B. To prevent writing conflicts in the dual-input mode, the B input port takes priority. Two select lines, S0 and S1, control which port has access to which register. S2 determines whether the A ports are in the input or the output modes and S3 does likewise for the B ports. The address lines (1A0-1A3 or 2A0-2A3) are decoded by an internal 1-of-16 decoder to select which register word is to be accessed. All outputs are 3-state buffer-type outputs designed specifically to drive bus lines directly.

The SN54AS870 and SN54AS871 are characterized for operation over the full military temperature range of −55°C to 125°C. The SN74AS870 and SN74AS871 are characterized for operation from 0°C to 70°C.

SN54AS870 . . . JT PACKAGE
SN74AS870 . . . DW OR NT PACKAGE
(TOP VIEW)

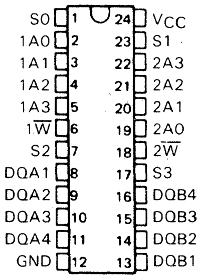
S0 1 24 VCC
1A0 2 23 S1
1A1 3 22 2A3
1A2 4 21 2A2
1A3 5 20 2A1
1W̄ 6 19 2A0
S2 7 18 2W̄
DQA1 8 17 S3
DQA2 9 16 DQB4
DQA3 10 15 DQB3
DQA4 11 14 DQB2
GND 12 13 DQB1

SN54AS871 . . . JD PACKAGE
SN74AS871 . . . DW OR N PACKAGE
(TOP VIEW)

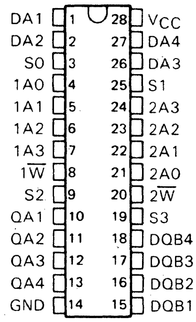
DA1 1 28 VCC
DA2 2 27 DA4
S0 3 26 DA3
1A0 4 25 S1
1A1 5 24 2A3
1A2 6 23 2A2
1A3 7 22 2A1
1W̄ 8 21 2A0
S2 9 20 2W̄
QA1 10 19 S3
QA2 11 18 DQB4
QA3 12 17 DQB3
QA4 13 16 DQB2
GND 14 15 DQB1

SN54AS870 . . . FK PACKAGE
SN74AS870 . . . FN PACKAGE
(TOP VIEW)

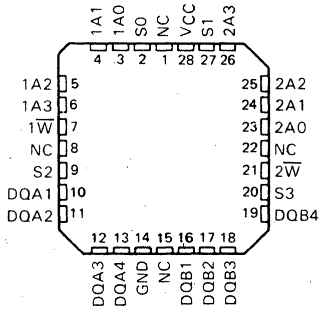
1A1 1A0 S0 NC VCC S1 2A3
4 3 2 1 28 27 26
1A2 5
1A3 6
1W̄ 7
NC 8
S2 9
DQA1 10
DQA2 11
25 2A2
24 2A1
23 2A0
22 NC
21 2W̄
20 S3
19 DQB4
12 13 14 15 16 17 18
DQA3 DQA4 GND NC DQB1 DQB2 DQB3

SN54AS871 . . . FK PACKAGE
SN74AS871 . . . FN PACKAGE
(TOP VIEW)

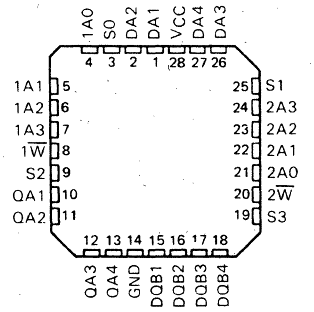
1A0 S0 DA2 DA1 VCC DA4 DA3
4 3 2 1 28 27 26
1A1 5
1A2 6
1A3 7
1W̄ 8
S2 9
QA1 10
QA2 11
25 S1
24 2A3
23 2A2
22 2A1
21 2A0
20 2W̄
19 S3
12 13 14 15 16 17 18
QA3 QA4 GND DQB1 DQB2 DQB3 DQB4

NC – No internal connection

PRODUCTION DATA documents contain information current as of publication date. Products conform to specifications per the terms of Texas Instruments standard warranty. Production processing does not necessarily include testing of all parameters.

Copyright © 1982, Texas Instruments Incorporated

TEXAS INSTRUMENTS
POST OFFICE BOX 225012 • DALLAS, TEXAS 75265

'AS870 logic symbol

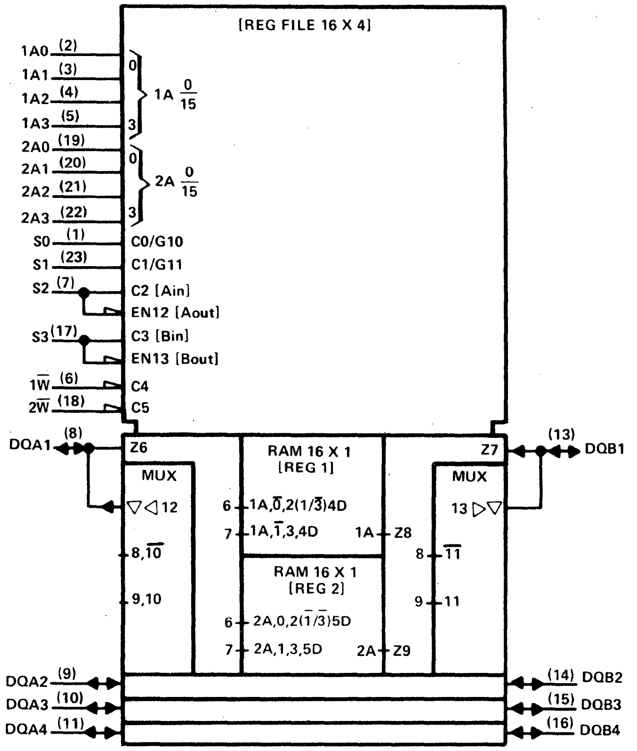
[REG FILE 16 X 4]
1A0 (2)
1A1 (3)
1A2 (4)
1A3 (5)
2A0 (19)
2A1 (20)
2A2 (21)
2A3 (22)
S0 (1)
S1 (23)
S2 (7)
S3 (17)
1W̄ (6)
2W̄ (18)
0
3
1A 0/15
2A 0/15
C0/G10
C1/G11
C2 [Ain]
EN12 [Aout]
C3 [Bin]
EN13 [Bout]
C4
C5
DQA1 (8)
Z6
MUX
▽◁12
8,10̄
9,10
RAM 16 X 1
[REG 1]
6 1A,0̄,2(1/3̄)4D
7 1A,1̄,3,4D
1A Z8
RAM 16 X 1
[REG 2]
6 2A,0,2(1̄/3̄)5D
7 2A,1,3,5D
2A Z9
Z7
MUX
13 ▷▽
8 1̄1̄
9 11
(13) DQB1
DQA2 (9)
DQA3 (10)
DQA4 (11)
(14) DQB2
(15) DQB3
(16) DQB4

'AS870 logic diagram

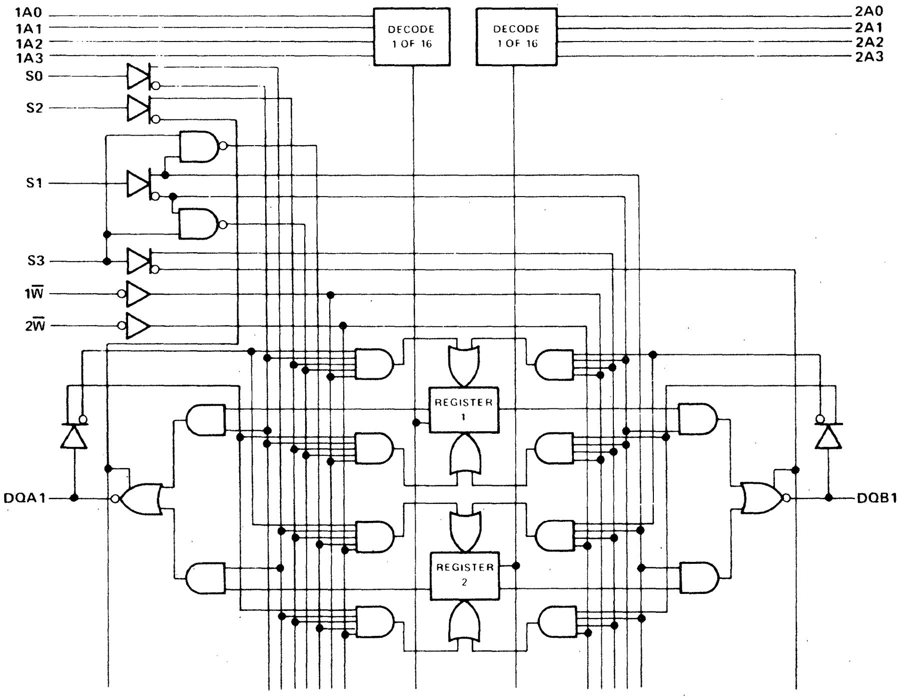
1A0
1A1
1A2
1A3
S0
S2
S1
S3
1W̄
2W̄
DECODE 1 OF 16
DECODE 1 OF 16
2A0
2A1
2A2
2A3
REGISTER 1
REGISTER 2
DQA1
DQB1

THREE IDENTICAL CHANNELS NOT SHOWN

'AS871 logic symbol

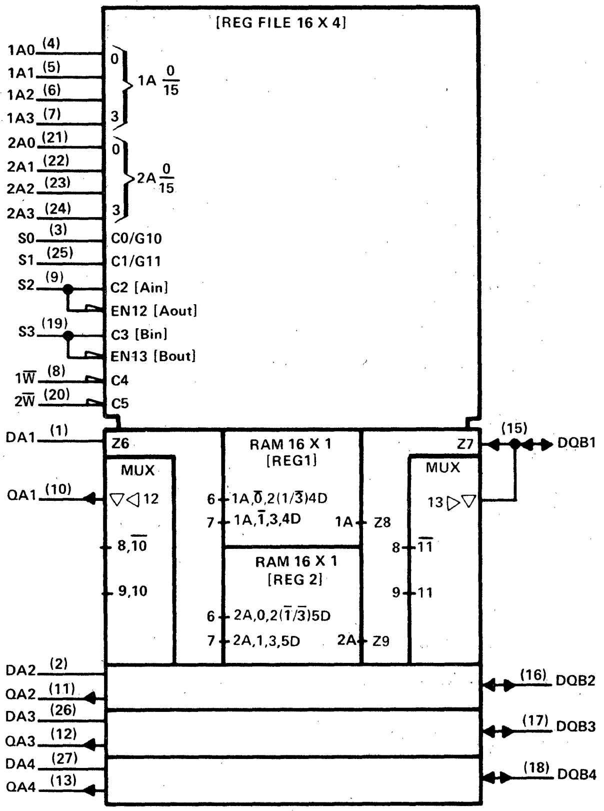
[REG FILE 16 X 4]
1A0 (4)
1A1 (5)
1A2 (6)
1A3 (7)
0
3
1A 0/15
2A0 (21)
2A1 (22)
2A2 (23)
2A3 (24)
2A 0/15
S0 (3) C0/G10
S1 (25) C1/G11
S2 (9) C2 [Ain]
EN12 [Aout]
S3 (19) C3 [Bin]
EN13 [Bout]
1W̄ (8) C4
2W̄ (20) C5
DA1 (1) Z6
MUX
QA1 (10) ▽◁12
8,1̄0̄
9,10
RAM 16 X 1 [REG1]
6 1A,0̄,2(1/3̄)4D
7 1A,1̄,3,4D
1A Z8
RAM 16 X 1 [REG 2]
6 2A,0,2(1̄/3̄)5D
7 2A,1,3,5D
2A Z9
Z7 (15) DQB1
MUX
13▷▽
8 1̄1̄
9 11
DA2 (2)
QA2 (11)
(16) DQB2
DA3 (26)
QA3 (12)
(17) DQB3
DA4 (27)
QA4 (13)
(18) DQB4

Pin numbers shown are for DW, JD, and N packages.

'AS871 logic diagram

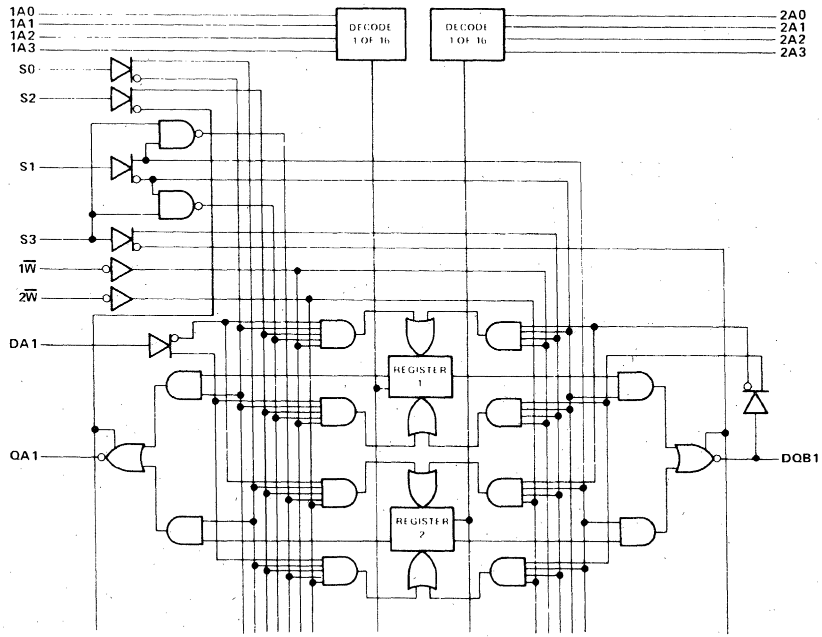
1A0
1A1
1A2
1A3
DECODE 1 OF 16
DECODE 1 OF 16
2A0
2A1
2A2
2A3
S0
S2
S1
S3
1W̄
2W̄
DA1
QA1
REGISTER 1
REGISTER 2
DQB1

THREE IDENTICAL CHANNELS NOT SHOWN

TEXAS INSTRUMENTS
POST OFFICE BOX 225012 • DALLAS, TEXAS 75265

FUNCTION TABLE

FILE SELECT			INPUT/OUTPUT		
S0	**S1**	**FILE SEL**	**S2**	**S3**	**I/O SEL**
L	L	1R TO A, 1R TO B	L	L	A OUT, B OUT
H	L	2R TO A, 1R TO B			
L	H	1R TO A, 2R TO B			
H	H	2R TO A, 2R TO B			
L	L	A TO 1R, 1R TO B	H	L	A IN, B OUT
H	L	A TO 2R, 1R TO B			
L	H	A TO 1R, 2R TO B			
H	H	A TO 2R, 2R TO B			
L	L	1R TO A, B TO 1R	L	H	A OUT, B IN
H	L	2R TO A, B TO 1R			
L	H	1R TO A, B TO 2R			
H	H	2R TO A, B TO 2R			
L	L	B TO 1R	H	H	A IN, B IN
H	L	A TO 2R, B TO 1R			
L	H	A TO 1R, B TO 2R			
H	H	B TO 2R			

absolute maximum ratings over operating free-air temperature range (unless otherwise noted)

Supply voltage, V_{CC} . . . . 7 V
Input voltage: All inputs . . . . 7 V
I/O ports . . . . 5.5 V
Voltage applied to a disabled 3-state output . . . . 5.5 V
Operating free-air temperature range: SN54AS870, SN54AS871 . . . . −55°C to 125°C
SN74AS870, SN74AS871 . . . . 0°C to 70°C
Storage temperature range . . . . −65°C to 150°C

recommended operating conditions

			SN54AS870 SN54AS871			SN74AS870 SN74AS871			UNIT
			MIN	NOM	MAX	MIN	NOM	MAX	
V_{CC}	Supply voltage		4.5	5	5.5	4.5	5	5.5	V
V_{IH}	High-level input voltage		2			2			V
V_{IL}	Low-level input voltage				0.8			0.8	V
I_{OH}	High-level output current				−12			−15	mA
I_{OL}	Low-level output current				32			48	mA
t_w	Duration of write pulse		12			12			ns
t_{su}	Setup times	Address before write↓	5			5			ns
		Data before write↑	15			15			
		Select before write↓	12			12			
t_h	Hold times	Address after write↑	0			0			ns
		Data after write↑	0			0			
		Select after write↑	12			12			
T_A	Operating free-air temperature		−55		125	0		70	°C

'AS870 electrical characteristics over recommended operating free-air temperature range (unless otherwise noted)

PARAMETER		TEST CONDITIONS		SN54AS870			SN74AS870			UNIT
				MIN	TYP†	MAX	MIN	TYP†	MAX	
V_{IK}		V_{CC} = 4.5 V,	I_I = −18 mA			−1.2			−1.2	V
V_{OH}		V_{CC} = 4.5 V to 5.5 V	I_{OH} = −2 mA	V_{CC} 2			V_{CC} 2			V
		V_{CC} = 4.5 V,	I_{OH} = −12 mA	2.4	3.2					
		V_{CC} = 4.5 V,	I_{OH} = −15 mA				2.4	3.2		
V_{OL}		V_{CC} = 4.5 V,	I_{OL} = 32 mA		0.25	0.5				V
		V_{CC} = 4.5 V,	I_{OL} = 48 mA					0.35	0.5	
I_I	Control inputs	V_{CC} = 5.5 V,	V_I = 7 V			0.1			0.1	mA
	DQA and DQB ports	V_{CC} = 5.5 V,	V_I = 5.5 V			0.2			0.2	
I_{IH}	W1 and W2	V_{CC} = 5.5 V,	V_I = 2.7 V			20			20	μA
	Other control inputs					40			40	
	DQA and DQB ports‡					50			50	
I_{IL}	Control inputs	V_{CC} = 5.5 V,	V_I = 0.4 V			−2			−2	mA
	DQA and DQB ports‡					−2			−2	
I_O§		V_{CC} = 5.5 V,	V_O = 2.25 V	−30		−112	−30		−112	mA
I_{CC}		V_{CC} = 5.5 V			120	190		120	190	mA

'AS871 electrical characteristics over recommended operating free-air temperature range (unless otherwise noted)

PARAMETER		TEST CONDITIONS		SN54AS871			SN74AS871			UNIT
				MIN	TYP†	MAX	MIN	TYP†	MAX	
V_{IK}		V_{CC} = 4.5 V,	I_I = −18 mA			−1.2			−1.2	V
V_{OH}		V_{CC} = 4.5 V to 5.5 V,	I_{OH} = −2 mA	V_{CC} 2			V_{CC} 2			V
		V_{CC} = 4.5 V,	I_{OH} = −12 mA	2.4	3.2					
		V_{CC} = 4.5 V,	I_{OH} = −15 mA				2.4	3.2		
V_{OL}		V_{CC} = 4.5 V,	I_{OL} = 32 mA		0.25	0.5				V
		V_{CC} = 4.5 V,	I_{OL} = 48 mA					0.35	0.5	
I_{OZH}	QA outputs	V_{CC} = 5.5 V,	V_O = 2.7 V			50			50	μA
I_{OZL}	QA outputs	V_{CC} = 5.5 V,	V_O = 0.4 V			−50			−50	μA
I_I	Control and DA inputs	V_{CC} = 5.5 V,	V_I = 7 V			0.1			0.1	mA
	DQB ports	V_{CC} = 5.5 V,	V_I = 5.5 V			0.2			0.2	
I_{IH}	W1, W2 and DA inputs	V_{CC} = 5.5 V,	V_I = 2.7 V			20			20	μA
	Other control inputs					40			40	
	DQB ports‡					50			50	
I_{IL}	Control and DA inputs	V_{CC} = 5.5 V,	V_I = 0.4 V			2			2	mA
	DQB ports‡					−2			2	
I_O§		V_{CC} = 5.5 V,	V_O = 2.25 V	30		−112	30		112	mA
I_{CC}		V_{CC} = 5.5 V			120	190		120	190	mA

---

† All typical values are at V_{CC} = 5 V, T_A = 25°C.

‡ For I/O ports, the parameters I_{IH} and I_{IL} include the off-state output current.

§ The output conditions have been chosen to produce a current that closely approximates one-half of the true short-circuit current, I_{OS}.

SN54AS877, SN74AS877
8-BIT UNIVERSAL TRANSCEIVER PORT CONTROLLERS

D2661, DECEMBER 1982 – REVISED AUGUST 1985

- Included Among the Package Options are Compact, 24-Pin, 300-mil-Wide Dips and Both 28-Pin Plastic and Ceramic Chip Carriers
- Buffered 3-State Outputs Drive Bus Lines Directly
- Cascaded to n-Bits
- Eight Selectable Transceiver/Port Functions:
  - A to B or B to A
  - Register to A or Register to B
  - Shifted to A or Shifted to B
  - Off-Line Shifts (A and B Ports in High-Impedance State)
  - Register Clear
- Particularly Suitable for Use in Signature-Analysis Circuitry
- Serial Register Provides:
  - Parallel Storage of Either A or B Input Data
  - Serial Transmission of Data from Either A or B Port
- Dependable Texas Instruments Quality and Reliability

SN54AS877 . . . JT PACKAGE
SN74AS877 . . . DW OR NT PACKAGE
(TOP VIEW)

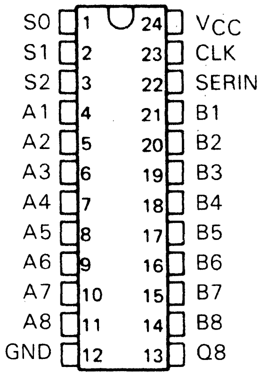

SN54AS877....FK PACKAGE
SN74AS877....FN PACKAGE
(TOP VIEW)

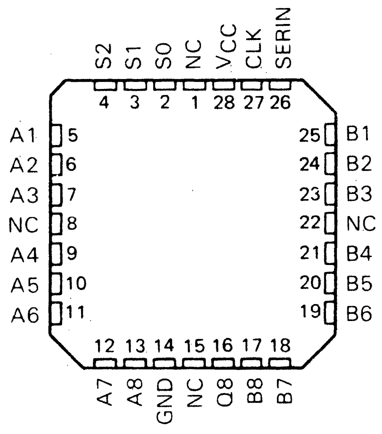

NC No internal connection

description

The 'AS877 features two 8-bit I/O ports (A1-A8 and B1-B8), an 8-bit parallel-load, serial-in, parallel-out shift register, and control logic. With these features, this device is capable of performing eight selectable transceiver or port functions, depending on the state of the three select lines S0, S1, and S2. These functions include: transferring data from port A to port B or vice versa (i.e., the transceiver function), transferring data from the register to either port, serial shifting data to either port, performing off-line shifts (with A and B ports in high-impedance state), and clearing the register. Synchronous parallel loading of the internal register can be accomplished from either port on the positive transition of the clock while serially shifting data in via the SERIN input. The 'AS877 is ideally suited for applications needing signature-analysis circuitry to enhance system verification and/or fault analysis. All serial data is shifted right. All outputs are buffer-type outputs designed specifically to drive bus lines directly and all are 3-state except for Q8, which is a totem-pole output.

The SN54AS877 is characterized for operation over the full military temperature range of −55°C to 125°C. The SN74AS877 is characterized for operation from 0°C to 70°C.

PRODUCTION DATA documents contain information current as of publication date. Products conform to specifications per the terms of Texas Instruments standard warranty. Production processing does not necessarily include testing of all parameters.

Copyright © 1982, Texas Instruments Incorporated

TEXAS INSTRUMENTS
POST OFFICE BOX 225012 • DALLAS, TEXAS 75265

SN54AS877, SN74AS877
8-BIT UNIVERSAL TRANSCEIVER PORT CONTROLLERS

FUNCTION TABLE

MODE S2 S1 S0	CLOCK	SERIN	A1 Q1 B1	A2 Q2 B2	A3 Q3 B3	A4 Q4 B4	A5 Q5 B5	A6 Q6 B6	A7 Q7 B7	A8 Q8 B8	PORT FUNCTION
L L L	H or L	X	Z Q_n A1	Z Q_n A2	Z Q_n A3	Z Q_n A4	Z Q_n A5	Z Q_n A6	Z Q_n A7	Z Q_n A8	A TO B
L L L	↑	X	Z A1 A1	Z A2 A2	Z A3 A3	Z A4 A4	Z A5 A5	Z A6 A6	Z A7 A7	Z A8 A8	
L L H	H or L	X	B1 Q_n Z	B2 Q_n Z	B3 Q_n Z	B4 Q_n Z	B5 Q_n Z	B6 Q_n Z	B7 Q_n Z	B8 Q_n Z	B TO A
L L H	↑	X	B1 B1 Z	B2 B2 Z	B3 B3 Z	B4 B4 Z	B5 B5 Z	B6 B6 Z	B7 B7 Z	B8 B8 Z	
L H L	H or L	X	X Q_n Q1	X Q_n Q2	X Q_n Q3	X Q_n Q4	X Q_n Q5	X Q_n Q6	X Q_n Q7	X Q_n Q8	Q_N TO B_N
L H L	↑	X	Z A1 A1	Z A2 A2	Z A3 A3	Z A4 A4	Z A5 A5	Z A6 A6	Z A7 A7	Z A8 A8	
L H H	H or L	X	Q1 Q_n X	Q2 Q_n X	Q3 Q_n X	Q4 Q_n X	Q5 Q_n X	Q6 Q_n X	Q7 Q_n X	Q8 Q_n X	Q_N TO A_N
L H H	↑	X	B1 B1 Z	B2 B2 Z	B3 B3 Z	B4 B4 Z	B5 B5 Z	B6 B6 Z	B7 B7 Z	B8 B8 Z	
H L L	H or L	X	Z Q_n Q1	Z Q_n Q2	Z Q_n Q3	Z Q_n Q4	Z Q_n Q5	Z Q_n Q6	Z Q_n Q7	Z Q_n Q8	SHIFT TO B
H L L	↑	H	Z H H	Z Q1 Q1	Z Q2 Q2	Z Q3 Q3	Z Q4 Q4	Z Q5 Q5	Z Q6 Q6	Z Q7 Q7	
H L L	↑	L	Z L L	Z Q1 Q1	Z Q2 Q2	Z Q3 Q3	Z Q4 Q4	Z Q5 Q5	Z Q6 Q6	Z Q7 Q7	
H L H	H or L	X	Q1 Q_n Z	Q2 Q_n Z	Q3 Q_n Z	Q4 Q_n Z	Q5 Q_n Z	Q6 Q_n Z	Q7 Q_n Z	Q8 Q_n Z	SHIFT TO A
H L H	↑	H	H H Z	Q1 Q1 Z	Q2 Q2 Z	Q3 Q3 Z	Q4 Q4 Z	Q5 Q5 Z	Q6 Q6 Z	Q7 Q7 Z	
H L H	↑	L	L L Z	Q1 Q1 Z	Q2 Q2 Z	Q3 Q3 Z	Q4 Q4 Z	Q5 Q5 Z	Q6 Q6 Z	Q7 Q7 Z	
H H L	H or L	X	Z Q_n Z	Z Q_n Z	Z Q_n Z	Z Q_n Z	Z Q_n Z	Z Q_n Z	Z Q_n Z	Z Q_n Z	SHIFT
H H L	↑	H	Z H Z	Z Q1 Z	Z Q2 Z	Z Q3 Z	Z Q4 Z	Z Q5 Z	Z Q6 Z	Z Q7 Z	
H H L	↑	L	Z L Z	Z Q1 Z	Z Q2 Z	Z Q3 Z	Z Q4 Z	Z Q5 Z	Z Q6 Z	Z Q7 Z	
H H H	H or L	X	Z Q_n Z	Z Q_n Z	Z Q_n Z	Z Q_n Z	Z Q_n Z	Z Q_n Z	Z Q_n Z	Z Q_n Z	CLEAR
H H H	↑	X	Z L Z	Z L Z	Z L Z	Z L Z	Z L Z	Z L Z	Z L Z	Z L Z	

n level of Q_n(n 1, 2...8) established on most recent ↑ transition of CLK. Q1 thru Q8 are the shift register outputs; only Q8 is available externally. The double inversions that take place as data travels from port to port are ignored in this table.

logic symbol†

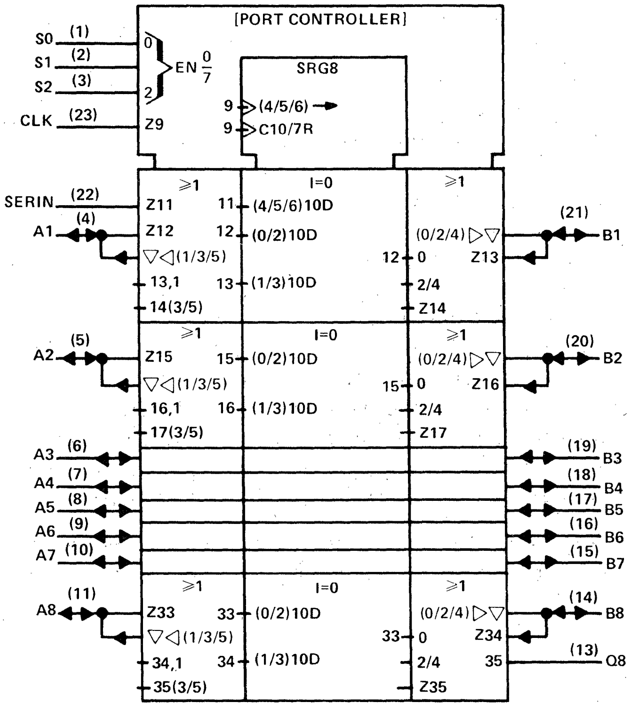
[PORT CONTROLLER]
S0 (1)
S1 (2)
S2 (3)
CLK (23)
EN 0/7
Z9
SRG8
9 ▷(4/5/6) →
9 ▷C10/7R
SERIN (22)
A1 (4)
Z11
Z12
▽◁(1/3/5)
13,1
14(3/5)
≥1
I=0
11 (4/5/6)10D
12 (0/2)10D
13 (1/3)10D
(0/2/4)▷▽
12 0 Z13
2/4
Z14
(21) B1
A2 (5)
Z15
▽◁(1/3/5)
16,1
17(3/5)
15 (0/2)10D
16 (1/3)10D
15 0 Z16
2/4
Z17
(20) B2
A3 (6)
A4 (7)
A5 (8)
A6 (9)
A7 (10)
(19) B3
(18) B4
(17) B5
(16) B6
(15) B7
A8 (11)
Z33
▽◁(1/3/5)
34,1
35(3/5)
33 (0/2)10D
34 (1/3)10D
33 0 Z34
2/4
Z35
35
(14) B8
(13) Q8

†This symbol is in accordance with ANSI/IEEE Std 91-1984 and IEC Publication 617-12.
Pin numbers shown are for DW, JT, and NT packages.

logic diagram (positive logic)

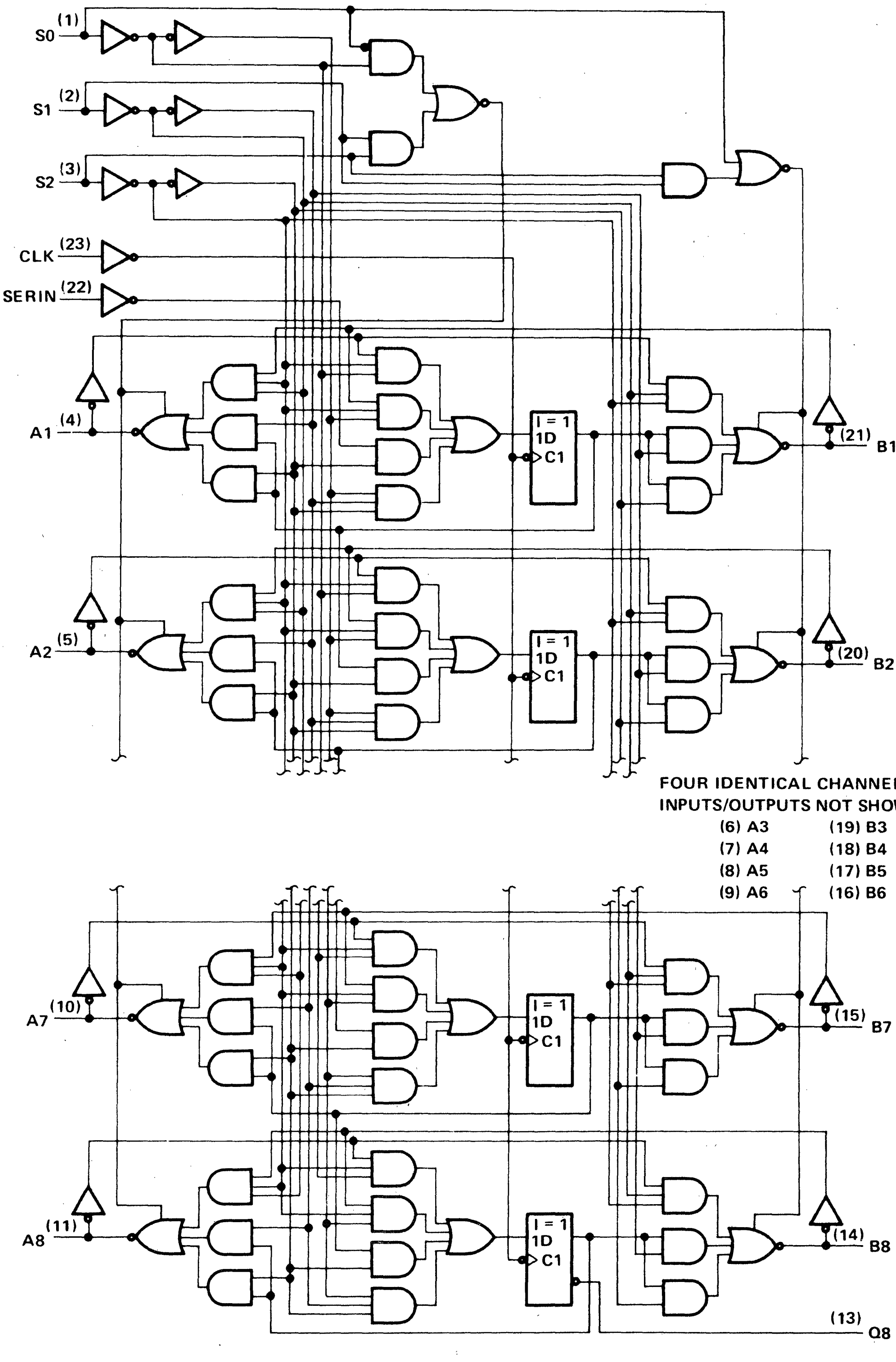
S0 (1)
S1 (2)
S2 (3)
CLK (23)
SERIN (22)
A1 (4)
A2 (5)
A7 (10)
A8 (11)
I = 1
1D
C1
(21) B1
(20) B2
(15) B7
(14) B8
(13) Q8

FOUR IDENTICAL CHANNELS NOT SHOWN
INPUTS/OUTPUTS NOT SHOWN:

(6) A3	(19) B3
(7) A4	(18) B4
(8) A5	(17) B5
(9) A6	(16) B6

Pin numbers shown are for DW, JT, and NT packages.

absolute maximum ratings over free-air temperature range

Supply voltage, V_{CC} . . . . 7 V
Input voltage: All inputs . . . . 7 V
I/O ports . . . . 5.5 V
Voltage applied to a disabled 3-state output . . . . 5.5 V
Operating free-air temperature range: SN54AS877 . . . . −55°C to 125°C
SN74AS877 . . . . 0°C to 70°C
Storage temperature range . . . . −65°C to 150°C

recommended operating conditions

			SN54AS877			SN74AS877			UNIT
			MIN	NOM	MAX	MIN	NOM	MAX	
V_{CC}	Supply voltage		4.5	5	5.5	4.5	5	5.5	V
V_{IH}	High-level input voltage		2			2			V
V_{IL}	Low-level input voltage				0.8			0.8	V
I_{OH}	High-level output current	A1-A8, B1-B8			−12			−15	mA
		Q8			−2			−2	
I_{OL}	Low-level output current	A1-A8, B1-B8			32			48	mA
		Q8			20			20	
f_{clock}	Clock frequency		0		45	0		50	MHz
t_w	Duration of clock pulse		11			10			ns
t_{su}	Setup time before CLK↑	A1-A8, B1-B8 SERIN	5.5			5.5			ns
		S0, S1, S2	5.5			5.5			
t_h	Hold time, data after CLK↑	A1-A8, B1-B8 SERIN	0			0			ns
		S0, S1, S2	0			0			
T_A	Operating free air temperature		55		125	0		70	°C

electrical characteristics over recommended operating free-air temperature range (unless otherwise noted)

PARAMETER		TEST CONDITIONS		SN54AS877			SN74AS877			UNIT
				MIN	TYP[†]	MAX	MIN	TYP[†]	MAX	
V_{IK}		V_{CC} = 4.5 V,	I_I = −18 mA			−1.2			−1.2	V
V_{OH}	A1 A8	V_{CC} = 4.5 V,	I_{OH} = −12 mA	2	3.2					V
	B1 B8	V_{CC} = 4.5 V,	I_{OH} = −15 mA				2	3.3		
	All outputs	V_{CC} = 4.5 V to 5.5 V,	I_{OH} = −2 mA	V_{CC} − 2			V_{CC} − 2			
V_{OL}	All outputs except Q8	V_{CC} = 4.5 V,	I_{OL} = 32 mA		0.25	0.5				V
		V_{CC} = 4.5 V,	I_{OL} = 48 mA					0.35	0.5	
	Q8	V_{CC} = 4.5 V,	I_{OL} = 20 mA		0.25	0.5		0.25	0.5	
I_I	S0, S1, S2	V_{CC} = 5.5 V,	V_I = 7 V			0.3			0.3	mA
	CLK and SERIN					0.1			0.1	
	A1-A8, B1-B8	V_{CC} = 5.5 V,	V_I = 5.5 V			0.2			0.2	
I_{IH}	S0, S1, S2	V_{CC} = 5.5 V,	V_I = 2.7 V			60			60	μA
	CLK and SERIN					20			20	
	A1-A8, B1-B8[‡]					70			70	
I_{IL}	S0, S1, S2	V_{CC} = 5.5 V,	V_I = 0.4 V			1			1	mA
	CLK and SERIN					−0.5			−0.5	
	A1-A8, B1-B8[‡]					−0.75			−0.75	
I_O[§]	Except Q8	V_{CC} = 5.5 V,	V_O = 2.25 V	30		−112	30		−112	mA
	Q8			20		−112	20		−112	
I_{CC}		V_{CC} = 5.5 V			136	220		136	220	mA

[†] All typical values are at V_{CC} = 5 V, T_A = 25°C.

[‡] For I/O ports, the parameters I_{IH} and I_{IL} include the output currents I_{OZH} and I_{OZL}, respectively.

[§] The output conditions have been chosen to produce a current that closely approximates one half of the true short-circuit output current, I_{OS}.

switching characteristics (see Note 1)

PARAMETER	FROM (INPUT)	TO (OUTPUT)	V_{CC} = 4.5 V to 5.5 V, C_L = 50 pF, R1 = 500 Ω, R2 = 500 Ω, T_A = MIN to MAX				UNIT
			SN54AS877		SN74AS877		
			MIN	MAX	MIN	MAX	
f_{max}			45		50		MHz
t_{PLH}	Any A port	Any B port	2	8.5	2	7	ns
t_{PHL}			3	10.5	3	9	
t_{PLH}	Any B port	Any A port	2	9	2	7.5	ns
t_{PHL}			3	10.5	3	9	
t_{PLH}	S0, S1, S2[¶]	Any A or B port	3	11.5	3	10	ns
t_{PHL}			2	9.5	2	8	
t_{PLH}	CLK	Any A or B port	2	11	2	9	ns
t_{PHL}			3	13	3	11.5	
t_{PLH}	CLK	QB	2	10.5	2	8	ns
t_{PHL}			3	10	3	8.5	
t_{PHZ}	S0, S1, S2	Any A or B port	2	7.5	2	6.5	ns
t_{PLZ}			3	13	3	10.5	
t_{PZH}			2	9	2	7	ns
t_{PZL}			3	11.5	3	9.5	

NOTE 1: Load circuit and voltage waveforms are shown in Section 1.

[¶] The positive transition of S2 will cause low-level data at the A output Bus or stored in the shift register to be invalid for 12 ns.

SN54AS888, SN74AS888
8-BIT PROCESSOR SLICES

MARCH 1985 REVISED AUGUST 1985

- STL-AS Technology
- Parallel 8-Bit ALU with Expansion Inputs and Outputs
- 13 Arithmetic and Logic Functions
- 8 Conditional Shifts (Single and Double Length)
- 9 Instructions that Manipulate Bytes
- 4 Instructions that Manipulate Bits
- Add and Subtract Immediate Instructions
- Absolute Value Instruction
- Signed Magnitude to/from Two's Complement Conversion
- Polynomial Code Accumulation (CRC, FIRE, Computer Generated, etc.)
- Single- and Double-Length Normalize
- Select Functions
- Signed and Unsigned Divides with Overflow Detection; Input does not Need to be Prescaled
- Signed, Mixed, and Unsigned Multiplies
- Three-Operand, 16-Word Register File
- Full Carry Look Ahead Support
- Sign, Carry Out, Overflow, and Zero-Detect Status Capabilities
- Excess-3 BCD Arithmetic
- Internal Shift Multiplexers that Eliminate the Need for External Shift Control Parts
- ALU Bypass Path to Increase Speeds of Multiply, Divide, and Normalize Instructions and to Provide New Instructions such as Bit Set, Bit Reset, Bit Test, Byte Subtract, Byte Add, and Byte Logical
- 3-Operand Register Files to Allow an Operation and a Move Instruction to be Combined
- Byte Select Controlled by External 3-State Buffers that may be Eliminated if Bit and Byte Manipulation are not Needed
- Bit and Byte Masks that are Shared with Register Address Fields to Minimize Control Store Word Width
- 3 Data Input/Output Paths to Maximize Data Throughput

description

These 8-bit Advanced Schottky TTL integrated circuits are designed to implement high performance digital computers or controllers. An architecture and instruction set has been chosen that supports a fast system clock, a narrow micro-code word width, and a high system throughput. The powerful instruction set allows high-speed system architecture to be implemented and also allows an existing system's performance to be upgraded while protecting software investments. These processors are designed to be cascadable to any word width 16 bits or greater.

The SN54AS888 is characterized for operation over the full military temperature range of −55 °C to 125 °C. The SN74AS888 and SN74AS888-1 are characterized for operation from 0 °C to 70 °C.

Package options include both plastic and ceramic chip carriers in addition to a 68-pin grid array ceramic package.

PRODUCTION DATA documents contain information current as of publication date. Products conform to specifications per the terms of Texas Instruments standard warranty. Production processing does not necessarily include testing of all parameters.

Copyright © 1982, Texas Instruments Incorporated

TEXAS INSTRUMENTS
POST OFFICE BOX 225012 • DALLAS, TEXAS 75265

SN54AS888, SN74AS888 . . . GB PACKAGE
(TOP VIEW)

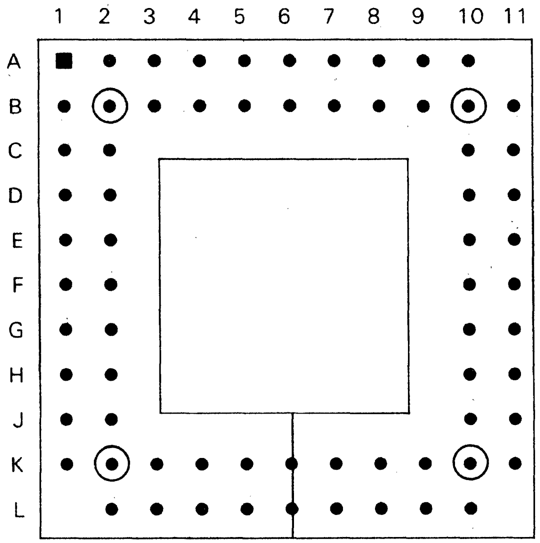
1 2 3 4 5 6 7 8 9 10 11
A
B
C
D
E
F
G
H
J
K
L

SN54AS888 . . . FK PACKAGE
SN74AS888 . . . FN PACKAGE
(TOP VIEW)

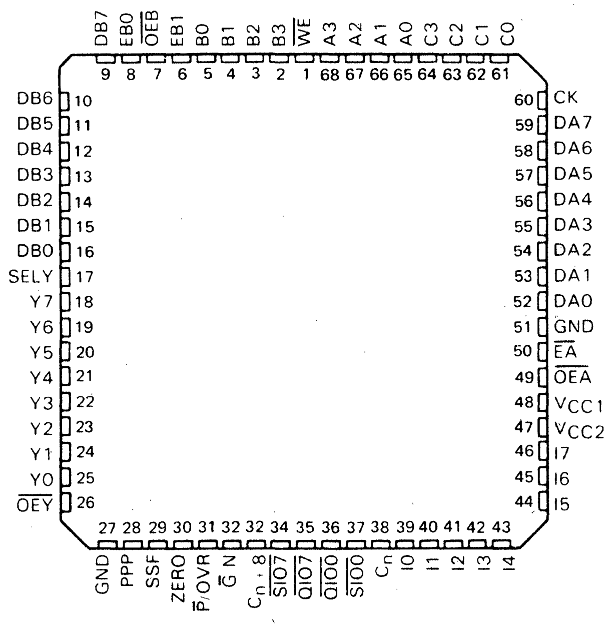
DB7 EB0 OEB EB1 B0 B1 B2 B3 WE A3 A2 A1 A0 C3 C2 C1 C0
9 8 7 6 5 4 3 2 1 68 67 66 65 64 63 62 61
DB6 10
DB5 11
DB4 12
DB3 13
DB2 14
DB1 15
DB0 16
SELY 17
Y7 18
Y6 19
Y5 20
Y4 21
Y3 22
Y2 23
Y1 24
Y0 25
OEY 26
60 CK
59 DA7
58 DA6
57 DA5
56 DA4
55 DA3
54 DA2
53 DA1
52 DA0
51 GND
50 EA
49 OEA
48 VCC1
47 VCC2
46 I7
45 I6
44 I5
27 28 29 30 31 32 32 34 35 36 37 38 39 40 41 42 43
GND PPP SSF ZERO P/OVR G N Cn+8 SIO7 QIO7 QIO0 SIO0 Cn I0 I1 I2 I3 I4

GB PACKAGE PIN ASSIGNMENTS

PIN	NAME	PIN	NAME	PIN	NAME	PIN	NAME
A 2	C_n	B 9	$\overline{OEY}$	F 10	Y3	K 4	C2
A-3	$\overline{SIO0}$	B-10	Y0	F-11	DB2	K-5	A0
A-4	$\overline{QIO0}$	B-11	Y1	G 1	DA2	K-6	A3
A-5	$\overline{QIO7}$	C 1	I5	G-2	DA0	K-7	$\overline{WE}$
A-6	C_{n+8}	C 2	V_{CC2}	G 10	DB0	K 8	DB7
A 7	$\overline{G}$/N	C 10	Y4	G 11	DB3	K-9	$\overline{OEB}$
A-8	$\overline{P}$/OVR	C-11	Y6	H-1	DA3	K-10	EB0
A-9	ZERO	D-1	I6	H-2	DA1	K-11	EB1
A-10	PPP	D-2	V_{CC1}	H-10	DB6	L-2	CK
B-1	I2	D-10	Y5	H-11	DB4	L-3	C1
B 2	I3	D 11	Y7	J 1	DA4	L 4	C3
B-3	I1	E 1	I7	J 2	DA5	L-5	A1
B-4	I0	E-2	$\overline{OEA}$	J-10	SELY	L-6	A2
B-5	I4	E-10	Y2	J-11	DB5	L-7	B3
B-6	$\overline{SIO7}$	E-11	DB1	K-1	DA6	L-8	B2
B-7	SSF	F-1	$\overline{EA}$	K-2	DA7	L-9	B1
B 8		F 2	GND	K 3	C0	L 10	B0

PIN FUNCTIONAL DESCRIPTION

PIN GRID ARRAY	CHIP CARRIER	NAME	I/O	DESCRIPTION
A-10	28	PPP	I	Package position pin. Tri-level input used to define package significance during instruction execution. Leave open for intermediate positions, tie to V_{CC} for most significant package, and tie to GND for least significant package.
B-7	29	SSF	I/O	Special shift function. Used to transfer required information between packages during special instruction execution.
A-9	30	ZERO	I/O	Device zero detection, open collector. Input during certain special instructions.
A-8	31	$\overline{\text{P}}$/OVR	O	ALU propagate/instruction overflow for most significant package, low active.
A-7	32	$\overline{\text{G}}$/N	O	ALU generate/negative result for most significant package, low active.
A-6	33	C_{n+8}	O	ALU ripple carry output.
B-6	34	$\overline{\text{SIO7}}$	I/O	Bidirectional shift pin, low active.
A-5	35	$\overline{\text{QIO7}}$	I/O	
A-4	36	$\overline{\text{QIO0}}$	I/O	
A-3	37	$\overline{\text{SIO0}}$	I/O	
A-2	38	C_n	I	ALU carry input.
B-4	39	I0	I	Instruction input.
B-3	40	I1	I	
B-1	41	I2	I	
B-2	42	I3	I	
B-5	43	I4	I	
C-1	44	I5	I	
D-1	45	I6	I	
E-1	46	I7	I	
C-2	47	V_{CC2}		Low voltage power supply (2 V).
D-2	48	V_{CC1}		I/O interface supply voltage (5 V).
E-2	49	$\overline{\text{OEA}}$	I	DA bus enable, low active.
F-1	50	$\overline{\text{EA}}$	I	ALU input operand select. High state selects external DA bus and low state selects register file.
F-2	51	GND		Ground pin.
G-2	52	DA0	I/O	A port data bus. Outputs register file data ($\overline{\text{EA}}$ = 0) or inputs external data ($\overline{\text{EA}}$ = 1).
H-2	53	DA1	I/O	
G-1	54	DA2	I/O	
H-1	55	DA3	I/O	
J-1	56	DA4	I/O	
J-2	57	DA5	I/O	
K-1	58	DA6	I/O	
K-2	59	DA7	I/O	
L-2	60	CK	I	Clocks all synchronous registers on positive edge.
K-3	61	C0	I	Register file write address select.
L-3	62	C1	I	
K-4	63	C2	I	
L-4	64	C3	I	
K-5	65	A0	I	Register file A port read address select.
L-5	66	A1	I	
L-6	67	A2	I	
K-6	68	A3	I	

PIN FUNCTIONAL DESCRIPTION

PIN GRID ARRAY	CHIP CARRIER	NAME	I/O	DESCRIPTION
K 7	1	$\overline{\text{WE}}$	I	Register file (RF) write enable. Data is written into RF when $\overline{\text{WE}}$ is low and a low-to-high clock transition occurs. RF write is inhibited when $\overline{\text{WE}}$ is high.
L-7	2	B3	I	Register file B port read address select. (0 = LSB).
L-8	3	B2	I	
L-9	4	B1	I	
L-10	5	B0	I	
K-11	6	EB1	I	ALU input operand select. This input with EB0 selects the source of data that the S multiplexer provides for the S bus. Independent control of the DB bus and data path selection allow the user to isolate the DB bus while the ALU continues to process data.
K-9	7	$\overline{\text{OEB}}$	I	DB bus enable, low active.
K-10	8	EB0	I	ALU input operand select. This input with EB1 selects the source of data that the S multiplexer provides for the S bus. Independent control of the DB bus and data path selection allow the user to isolate the DB bus while the ALU continues to process data.
K-8	9	DB7	I/O	B port data bus. Outputs register data ($\overline{\text{OEB}}$ = 0) or used to input external data ($\overline{\text{OEB}}$ = 1), (0 = LSB).
H-10	10	DB6	I/O	
J-11	11	DB5	I/O	
H-11	12	DB4	I/O	
G-11	13	DB3	I/O	
F-11	14	DB2	I/O	
E-11	15	DB1	I/O	
G-10	16	DB0	I/O	
J-10	17	SELY	I	Y bus select, high active.
D-11	18	Y7	I/O	Y port data bus. Outputs instruction results ($\overline{\text{OEY}}$ = 0) or used to put external data into register file ($\overline{\text{OEY}}$ = 1).
C-11	19	Y6	I/O	
D-10	20	Y5	I/O	
C-10	21	Y4	I/O	
F-10	22	Y3	I/O	
E-10	23	Y2	I/O	
B-11	24	Y1	I/O	
B-10	25	Y0	I/O	
B-9	26	$\overline{\text{OEY}}$	I	Y bus output enable, low active.
F-2	27	GND		Ground pin

functional block diagram

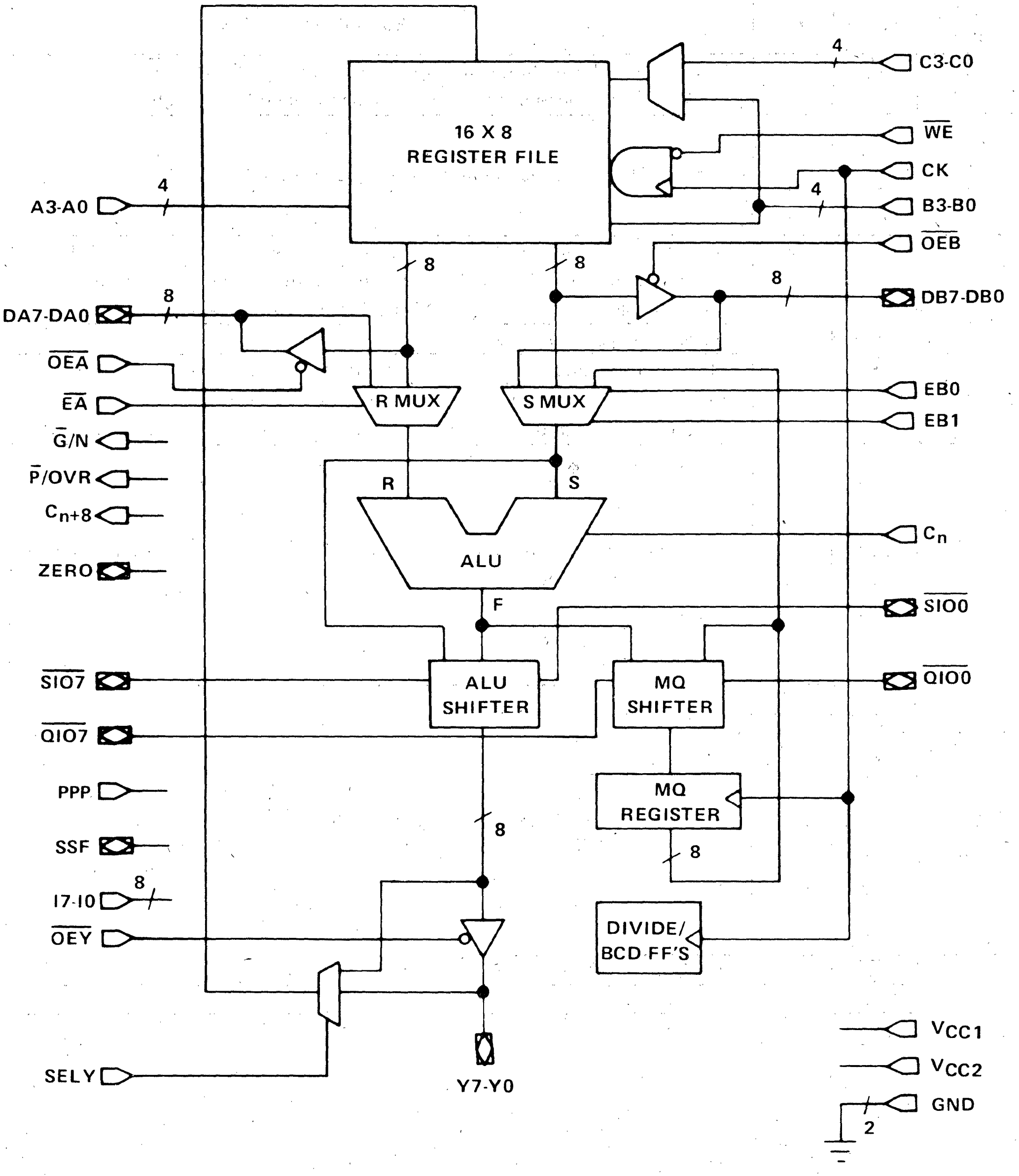
16 X 8
REGISTER FILE
A3-A0
4
C3-C0
4
WE
CK
B3-B0
4
OEB
DB7-DB0
8
8
8
DA7-DA0
8
OEA
EA
R MUX
S MUX
EB0
EB1
G/N
P/OVR
Cn+8
ZERO
R
S
ALU
Cn
F
SIO0
SIO7
ALU
SHIFTER
MQ
SHIFTER
QIO0
QIO7
PPP
MQ
REGISTER
SSF
8
8
I7-I0
8
OEY
DIVIDE/
BCD FF'S
SELY
Y7-Y0
VCC1
VCC2
GND
2

architectural elements

3-port register file

Working registers consist of 128 storage elements organized into sixteen 8-bit words. These storage elements appear to the user as 16 positive edge-triggered registers. The three port addresses, one write (C) and two reads (A and B), are completely independent of each other to implement a 3-operand register file. Data is written into the register file when $\overline{WE}$ is low and a low-to-high clock transition occurs. The ADD and SUBTRACT immediate instructions require only one source operand. The B address is used as the source address, and the bits of the A address are used to provide a constant field. The SET, RESET, and TEST BIT instructions use the B addressed register as both the source and destination register while the A and C addresses are used as masks. These instructions are explained in more detail in the instruction section.

S multiplexer

The S multiplexer selects the ALU operand, as follows:

EB1	EB0	S bus
Low	Low	RF data
Low	High	MQ data
High	Low	DB data
High	High	MQ data

DB port

Data is passed through the ALU or received from the register file on the 8-bit DB port. If $\overline{OEB}$ is low, the DB bus is active; if $\overline{OEB}$ is high, the DB bus is in the high impedance state. Notice that the DB port may be isolated at the same time that register file data is passed to the ALU.

R multiplexer

The R multiplexer selects the other operand of the ALU. Except for those instructions that require constants or masks, the R bus will contain DA if $\overline{EA}$ is high or the RF data pointed to by A if $\overline{EA}$ is low.

DA bus

The DA bus is active (with register file data) if $\overline{OEA}$ is low. Notice that the DA bus may be isolated while register file data is passed to the ALU.

ALU

The shift instructions are summarized in Table 4 and illustrated in Figure 2. The ALU can perform seven arithmetic and six logical instructions on two 8-bit operands. It also supports multiplication, division, normalization, bit set, reset, test, byte operations, and excess-3 BCD arithmetic. These source operands are the outputs of the S and R multiplexers.

ALU and MQ shifters

ALU and MQ shifters perform all of the shift, multiply, divide, and normalize functions. Table 4 shows the value of the $\overline{SIO7}$ and $\overline{QIO7}$ pins of the most significant package. The standard shifts may be made into conditional shifts and the serial data may be input or output with the aid of two three-state gates. These capabilities are discussed further in the arithmetic and logic section.

MQ register

The multiplier-quotient (MQ) register has specific functions in multiplication, division, and normalization. This register may also be used as a temporary storage register. The MQ register may be loaded if the instruction code on pins I7-I0 is E1-E7 or E9-EE (See Table 1).

Y bus

The Y bus contains the output of the ALU shifter if $\overline{\text{OEY}}$ is low and is a high impedance input if $\overline{\text{OEY}}$ is high. SELY must be low to pass the internal ALU shift bus and must be high to pass the external Y bus to the register file.

status

Four status pins are available on the most significant package, overflow (OVR), sign (N), carry out (C_{n+8}), and zero (ZERO). The C_{n+8} line signifies the ALU result while OVR, ZERO, and N refer the status after the ALU shift has occurred. Notice that the ZERO pin cannot be used to detect whether an input placed on a high impedance Y bus is zero.

divide BCD flip-flops

The multiply-divide flip-flops contain the status of the previous multiply or divide instruction. They are affected by the following instructions:

DIVIDE REMAINDER FIX
SIGNED DIVIDE QUOTIENT FIX
SIGNED MULTIPLY
SIGNED MULTIPLY TERMINATE
SIGNED DIVIDE INITIALIZE
SIGNED DIVIDE START
SIGNED DIVIDE ITERATE
UNSIGNED DIVIDE START
UNSIGNED DIVIDE ITERATE
UNSIGNED MULTIPLY
SIGNED DIVIDE TERMINATE
UNSIGNED DIVIDE TERMINATE

The excess-3 BCD flip-flops are affected by all instructions except NOP. The clear function clears these flip-flops. They preserve the carry from each nibble (4-bits) in excess-3/BCD operations.

package position pin (PPP)

The position of the processor in the system is defined by the voltage level applied to the package position pin (PPP). Intermediate positions are selected by leaving the pin open. Tying the pin to V_{CC} makes the processor the most significant package and tying the pin to GND makes the processor the least significant package.

special shift function (SSF) pin

Conditional shifting algorithms may be implemented via control of the SSF pin. The applied voltage to this pin may be set as a function of a potential overflow condition (the two most significant bits are not equal) or any other condition (see Group 1 instructions).

instruction set

The 'AS888 bit-slice processor uses bits I7-I0 as instruction inputs. A combination of bits I3-I0 (Group 1 instructions) and bits I7-I4 (Group 2-5 instructions) are used to develop the 8-bit op code for a specific instruction. Group 1 and Group 2 instructions can be combined to perform arithmetic or logical functions plus a shift function in one instruction cycle. A summary of the instruction set is given in Table 1.

TABLE 1. INSTRUCTION SET

GROUP 1 INSTRUCTIONS

INSTRUCTION BITS (I3-I0) HEX CODE	MNEMONIC	FUNCTION
0		Accesses Group 4 instructions
1	ADD	$R + S + C_n$
2	SUBR	$\overline{R} + S + C_n$
3	SUBS	$R + \overline{S} + C_n$
4	INCS	$S + C_n$
5	INCNS	$\overline{S} + C_n$
6	INCR	$R + C_n$
7	INCNR	$\overline{R} + C_n$
8		Accesses Group 3 instructions
9	XOR	R XOR S
A	AND	R AND S
B	OR	R OR S
C	NAND	R NAND S
D	NOR	R NOR S
E	ANDNR	$\overline{R}$ AND S
F		Accesses Group 5 instructions

GROUP 2 INSTRUCTIONS

INSTRUCTION BITS (I7-I4) HEX CODE	MNEMONIC	FUNCTION
0	SRA	Arithmetic Right Single
1	SRAD	Arithmetic Right Double
2	SRL	Logical Right Single
3	SRLD	Logical Right Double
4	SLA	Arithmetic Left Single
5	SLAD	Arithmetic Left Double
6	SLC	Circular Left Single
7	SLCD	Circular Left Double
8	SRC	Circular Right Single
9	SRCD	Circular Right Double
A	MQSRA	Pass (F→Y) and Arithmetic Right MQ
B	MQSRL	Pass (F→Y) and Logical Right MQ
C	MQSLL	Pass (F→Y) and Logical Left MQ
D	MQSLC	Pass (F→Y) and Circular Left MQ
E	LOADMQ	Pass (F→Y) and Load MQ (F MQ)
F	PASS	Pass (F→Y)

TABLE 1. INSTRUCTION SET (Continued)

GROUP 3 INSTRUCTIONS

INSTRUCTION BITS (I7-I0) HEX CODE	MNEMONIC	FUNCTION
08	SET1	Set Bit
18	SET0	Reset Bit
28	TB1	Test Bit (One)
38	TB0	Test Bit (Zero)
48	ABS	Absolute Value
58	SMTC	Sign Magnitude/Two's Complement
68	ADDI	Add Immediate
78	SUBI	Subtract Immediate
88	BADD	Byte Add R to S
98	BSUBS	Byte Subtract S from R
A8	BSUBR	Byte Subtract R from S
B8	BINCS	Byte Increment S
C8	BINCNS	Byte Increment Negative S
D8	BXOR	Byte XOR R and S
E8	BAND	Byte AND R and S
F8	BOR	Byte OR R and S

GROUP 4 INSTRUCTIONS

INSTRUCTION BITS (I7-I0) HEX CODE	MNEMONIC	FUNCTION
00		Reserved
10	SEL	Select S/R
20	SNORM	Single Length Normalize
30	DNORM	Double Length Normalize
40	DIVRF	Divide Remainder Fix
50	SDIVQF	Signed Divide Quotient Fix
60	SMULI	Signed Multiply Iterate
70	SMULT	Signed Multiply Terminate
80	SDIVIN	Signed Divide Initialize
90	SDIVIS	Signed Divide Start
A0	SDIVI	Signed Divide Iterate
B0	UDIVIS	Unsigned Divide Start
C0	UDIVI	Unsigned Divide Iterate
D0	UMULI	Unsigned Multiply Iterate
E0	SDIVIT	Signed Divide Terminate
F0	UDIVIT	Unsigned Divide Terminate

TABLE 1. INSTRUCTION SET (Concluded)

GROUP 5 INSTRUCTIONS

INSTRUCTION BITS (I7-I0) HEX CODE	MNEMONIC	FUNCTION
0F	CLR	Clear
1F	CLR	Clear
2F	CLR	Clear
3F	CLR	Clear
4F	CLR	Clear
5F	CLR	Clear
6F	CLR	Clear
7F	BCDBIN	BCD to Binary
8F	EX3BC	Excess 3 Byte Correction
9F	EX3C	Excess-3 Word Correction
AF	SDIVO	Signed Divide Overflow Check
BF	CLR	Clear
CF	CLR	Clear
DF	BINEX3	Binary to Excess 3
EF	CLR	Clear
FF	NOP	No Operation

group 1 instructions

TABLE 2. GROUP 1 INSTRUCTIONS

INSTRUCTION BITS (I3-I0) HEX CODE	MNEMONIC	FUNCTION
0		Accesses Group 4 instructions
1	ADD	$R + S + C_n$
2	SUBR	$\overline{R} + S + C_n$
3	SUBS	$R + \overline{S} + C_n$
4	INCS	$S + C_n$
5	INCNS	$\overline{S} + C_n$
6	INCR	$R + C_n$
7	INCNR	$\overline{R} + C_n$
8		Accesses Group 3 instructions
9	XOR	R XOR S
A	AND	R AND S
B	OR	R OR S
C	NAND	R NAND S
D	NOR	R NOR S
E	ANDNR	$\overline{R}$ AND S
F		Accesses Group 5 instructions

absolute maximum rating over operating free-air temperature range (unless otherwise noted)

Supply voltage, V_{CC1}	7 V
Supply voltage, V_{CC2}	3 V
Input voltage	7 V
High-level voltage applied to 3-state outputs	5.5 V
Operating case temperature range: SN54AS888	−55°C to 125°C
Operating free-air temperature range: SN74AS888, SN74AS888-1	0°C to 70°C
Storage temperature range	−65°C to 150°C

recommended operating conditions

			SN54AS888			SN74AS888 SN74AS888-1			UNIT
			MIN	NOM	MAX	MIN	NOM	MAX	
V_{CC1}	I/O supply voltage		4.5	5	5.5	4.5	5	5.5	V
V_{CC2}	STL internal logic supply voltage		1.9	2	2.1	1.9	2	2.1	V
V_{IH}	High-level input voltage		2			2			V
V_{IL}	Low-level input voltage				0.8			0.8	V
I_{OH}	High-level output current				−1			−2.6	mA
I_{OL}	Low-level output current	All output except $\overline{G}$ and ZERO			8			8	mA
		$\overline{G}$			16			16	
		ZERO			48			48	
T_C	Operating case temperature		−55		125				°C
T_A	Operating free-air temperature					0		70	

electrical characteristics over recommended operating free-air temperature range (unless otherwise noted)

PARAMETER		TEST CONDITIONS	SN54AS888			SN74AS888 SN74AS888-1			UNIT
			MIN	TYP[†]	MAX	MIN	TYP[†]	MAX	
V_{IK}		V_{CC1} = 4.5 V, I_I = −18 mA			−1.2			−1.2	V
V_{OH}	All outputs except ZERO	V_{CC1} = 4.5 V to 5.5 V, I_{OH} = −0.4 mA	V_{CC}−2			V_{CC}−2			V
		V_{CC1} = 4.5 V, I_{OH} = −1 mA	2.4						
		V_{CC1} = 4.5 V, I_{OH} = −2.6 mA				2.4			
I_{OH}	ZERO	V_{CC1} = 4.5 V, V_{OH} = 5.5 V			0.1			0.1	mA
V_{OL}	All outputs except $\overline{G}$ and ZERO	V_{CC1} = 4.5 V, I_{OL} = 8 mA			0.5			0.5	V
	$\overline{G}$	V_{CC1} = 4.5 V, I_{OL} = 16 mA			0.5			0.5	
	ZERO	V_{CC1} = 4.5 V, I_{OL} = 48 mA			0.5			0.5	
I_I	I/O	V_{CC1} = 5.5 V, V_I = 5.5 V			0.1			0.1	mA
	All others	V_{CC1} = 5.5 V, V_I = 7 V			0.1			0.1	
I_{IH}[‡]		V_{CC1} = 5.5 V, V_I = 2.7 V			20			20	μA
I_{IL}[‡]		V_{CC1} = 5.5 V, V_I = 0.5 V			−0.4			−0.4	mA
I_O[§]		V_{CC1} = 5.5 V, V_O = 2.25 V	−30		−112	−30		−112	mA
I_{CC1}		V_{CC1} = 5.5 V			150			130	mA
I_{CC2}		V_{CC2} = 2.1 V			410			390	mA

[†] All typical values are at V_{CC} = 5 V, T_A = 25°C.
[‡] For I/O ports, the parameters I_{IH} and I_{IL} include the off state current.
[§] The output conditions have been chosen to produce a current that closely approximates one half the true short-circuit current, I_{OS}.

SN54AS888 maximum switching characteristics, V_{CC} = 4.5 V to 5.5 V, T_C = −55 °C to 125 °C (see Note 1)

PARAMETER	FROM (INPUT)	TO (OUTPUT)										UNIT
		Y	C_{n+8}	$\overline{G}$, $\overline{P}$	$Z^{\dagger}$	N	OVR	DA	DB	$\overline{QIO}$	$\overline{SIO}$	
t_{pd}	A3-A0 B3-B0	62	42	48	69	62	60	18	18	65	66	ns
	DA7-DA0, DB7-DB0	47	28	28	58	50	42	–	–	50	50	
	C_n	25	14	–	32	24	18	–	–	32	32	
	$\overline{EA}$	54	32	35	62	52	52	–	–	58	58	
	$\overline{EB}$	54	32	35	62	52	52	–	–	58	58	
	I7-I0	58	32	32	62	52	41	–	–	58	58	
	$\overline{OEB}$	–	–	–	–	–	–	–	14	–	–	
	$\overline{OEY}$	14	–	–	–	–	–	–	–	–	–	
	$\overline{QIO}$ (n) Shift	15	–	–	24	–	–	–	–	–	–	
	$\overline{SIO}$ (n) Shift	15	–	–	24	22	–	–	–	–	–	
	CK	68	60	56	62	50	68	38	38	70	70	
	$\overline{OEA}$	–	–	–	–	–	–	14	–	–	–	
	SSF‡	–	–	–	–	–	14	–	–	–	–	

† Load resistor R1 = 100 Ω.
‡ For byte instructions only.
NOTE 1: Load circuit and voltage waveforms are shown in Section 1.

SN74AS888 maximum switching characteristics, V_{CC} = 4.5 V to 5.5 V, T_A = 0 °C to 70 °C (see Note 1)

PARAMETER	FROM (INPUT)	TO (OUTPUT)										UNIT
		Y	C_{n+8}	$\overline{G}$, $\overline{P}$	$Z^{\dagger}$	N	OVR	DA	DB	$\overline{QIO}$	$\overline{SIO}$	
t_{pd}	A3-A0 B3-B0	54	36	42	60	52	50	18	18	58	58	ns
	DA7-DA0, DB7-DB0	44	26	26	52	46	38	–	–	44	44	
	C_n	25	8	–	32	24	18	–	–	31	31	
	$\overline{EA}$	49	29	29	58	49	47	–	–	54	54	
	$\overline{EB}$	49	29	29	58	49	47	–	–	54	54	
	I7-I0	55	30	30	60	49	39	–	–	54	54	
	$\overline{OEB}$	–	–	–	–	–	–	–	12	–	–	
	$\overline{OEY}$	12	–	–	–	–	–	–	–	–	–	
	$\overline{QIO}$ (n) Shift	15	–	–	24	–	–	–	–	–	–	
	$\overline{SIO}$ (n) Shift	15	–	–	24	19	–	–	–	–	–	
	CK	58	55	52	61	52	62	35	35	60	60	
	$\overline{OEA}$	–	–	–	–	–	–	12	–	–	–	
	SSF‡	–	–	–	–	–	12	–	–	–	–	

† Load resistor R1 = 100 Ω.
‡ For byte instructions only.
NOTE 1: Load circuit and voltage waveforms are shown in Section 1.

SN74AS888-1 maximum switching characteristics, V_{CC} = 4.5 V to 5.5 V, T_A = 0 °C to 70 °C (see Note 1)

PARAMETER	FROM (INPUT)	TO (OUTPUT)										UNIT
		Y	C_{n+8}	$\overline{\text{G}}$, $\overline{\text{P}}$	Z†	N	OVR	DA	DB	$\overline{\text{QIO}}$	$\overline{\text{SIO}}$	
t_{pd}	A3-A0 B3-B0	44	30	36	50	44	44	17	17	48	48	ns
	DA7-DA0, DB7-DB0	36	24	24	46	41	32	–	–	40	40	
	C_n	22	8	–	27	21	16	–	–	25	25	
	$\overline{\text{EA}}$	40	25	25	49	41	41	–	–	44	44	
	$\overline{\text{EB}}$	40	25	25	49	41	41	–	–	44	44	
	I7-I0	46	27	27	50	42	35	–	–	45	45	
	$\overline{\text{OEB}}$	–	–	–	–	–	–	–	12	–	–	
	$\overline{\text{OEY}}$	12	–	–	–	–	–	–	–	–	–	
	$\overline{\text{QIO}}$ (n) Shift	14	–	–	20	–	–	–	–	–	–	
	$\overline{\text{SIO}}$ (n) Shift	14	–	–	20	18	–	–	–	–	–	
	CK	50	46	46	50	50	50	30	30	50	50	
	$\overline{\text{OEA}}$	–	–	–	–	–	–	12	–	–	–	
	SSF‡	–	–	–	–	–	12	–	–	–	–	

† Load resistor R1 = 100 Ω.
‡ For byte instructions only.
NOTE 1: Load circuit and voltage waveforms are shown in Section 1.

register file write setup and hold times

PARAMETER		SN54AS888		SN74AS888		SN74AS888-1		UNIT
		MIN	MAX	MIN	MAX	MIN	MAX	
t_{su}	C3-C0	8		7		6		ns
	DB§	14		12		11		
	I7-I4	16		14		13		
	I3-I0	24		22		21		
	$\overline{\text{OEY}}$	4		3		3		
	Y7-Y0	2		2		2		
	$\overline{\text{WE}}$	8		6		6		
	$\overline{\text{QIO}}$(n), $\overline{\text{SIO}}$(n)	6		5		5		
	SELY	8		6		6		
t_h	C3-C0	0		0		0		ns
	DB§	0		0		0		
	I7-I4	0		0		0		
	I3-I0	0		0		0		
	$\overline{\text{OEY}}$	6		5		5		
	Y7-Y0	10		10		10		
	$\overline{\text{WE}}$	3		2		2		
	$\overline{\text{QIO}}$(n), $\overline{\text{SIO}}$(n)	0		0		0		
	SELY	8		6		6		

§ DB (during select instruction) through Y port.

special instruction switching characteristics

During various special instructions, the SSF pin is used to pass required information between the 'AS888 packages which make up a total system.

For instance, during the multiplication process, the LSB of the multiplier determines whether an ADD/SHIFT or SHIFT operation is performed. During multiplication, the SSF pin of the least significant package (LSP) becomes an output pin while all other packages become input pins.

Similarly, during normalization, the required operation depends on whether the two data MSBs are the same or different. Therefore, during normalization the SSF pin of the most significant package (MSP) becomes an output pin while all other packages become input pins.

Tables 10, 11, and 12 list the instructions which force the SSF pin during their execution. The propagation delay from various inputs is also shown. The parameter which limits normal system performance is indicated by a dagger.

TABLE 10. SN54AS888 SSF PIN DELAYS AND SETUP TIMES

MNEMONIC	HEX CODE	SSF SOURCE		INPUT → SSF (ns)				SSF SETUP TIME (ns)
		LSP	MSP	C_n	$I_{(n)}$	CK	$B_{(n)}$	
CRC	00	X		–	29	58	40[†]	20
SNORM	20		X	–	29[†]	46	–	20
DNORM	30		X	–	29	55	40[†]	20
DIVRF	40		X	–	29[†]	46	–	20
SDIVQF	50		X	–	26[†]	–	–	18
SMULI	60	X		–	26[†]	43	–	0
SDIVIN	80		X	–	48	64	44[†]	0
SDIVIS	90		X	26[†]	51	64	55	0
SDIVI	A0		X	26[†]	51	64	55	0
UDIVIS	B0		X	18[†]	45	64	46	0
UDIVI	C0		X	18[†]	50	54	40	0
UMULI	D0	X		–	25[†]	48	–	0
SDIVIT	E0		X	26[†]	50	56	54	0
ABX	48		X	–	34	62	39[†]	20
SMTC	58		X	–	29	58	39[†]	20
BINEX3	DF		X	–	29[†]	58	–	18
LOADMQ (Arith)		X		23[†]	34	62	40	0
LOADMQ (Log)		X		–	33	62	40[†]	0
BADD	88	↑ SOURCE IS MOST SIGNIFICANT BYTE SELECTED ↓		18[†]	58	62	49	–
BSUBS	98			18[†]	58	62	49	–
BSUBR	A8			18[†]	58	71	49	–
BINCS	B8			18[†]	58	60	49	–
BINCNS	C8			18[†]	58	71	49	–
BXOR	D8			–	58	–	–	–
BAND	E8			–	58	–	–	–
BOR	F8			–	58	–	–	–
EX3BC	8F			–	58	46	49[†]	–

[†] This parameter limits normal system performance.

TABLE 11. SN74AS888 SSF PIN DELAYS AND SETUP TIMES

MNEMONIC	HEX CODE	SSF SOURCE		INPUT → SSF (ns)				SSF SETUP TIME (ns)
		LSP	MSP	C_n	$I_{(n)}$	CK	$B_{(n)}$	
CRC	00	X		–	26	52	37†	17
SNORM	20		X	–	26†	40	–	17
DNORM	30		X	–	26	52	37†	17
DIVRF	40		X	–	26†	40	–	17
SDIVQF	50		X	–	25†	–	–	17
SMULI	60	X		–	25†	40	–	0
SDIVIN	80		X	–	38	60	40†	0
SDIVIS	90		X	24†	48	60	52	0
SDIVI	A0		X	24†	48	60	52	0
UDIVIS	B0		X	17†	43	60	45	0
UDIVI	C0		X	17†	44	52	37	0
UMULI	D0	X		–	26†	40	–	0
SDIVIT	E0		X	25†	46	52	49	0
ABX	48		X	–	32	60	38	17
SMTC	58		X	–	26	52	38†	17
BINEX3	DF		X	–	26†	40	–	17
LOADMQ (Arith)		X		22†	32	50	38	0
LOADMQ (Log)		X		–	32	50	38†	0
BADD	88	↑ SOURCE IS MOST SIGNIFICANT BYTE SELECTED ↓		17†	52	55	46	–
BSUBS	98			17†	52	55	46	–
BSUBR	A8			17†	52	62	46	–
BINCS	B8			17†	52	55	46	–
BINCNS	C8			17†	52	62	46	–
BXOR	D8			–	52	–	–	–
BAND	E8			–	52	–	–	–
BOR	F8			–	52	–	–	–
EX3BC	8F			–	45	45	46†	–

† This parameter limits normal system performance.

TABLE 12. SN74AS888-1 SSF PIN DELAYS AND SETUP TIMES

MNEMONIC	HEX CODE	SSF SOURCE LSP	SSF SOURCE MSP	INPUT → SSF (ns) C_n	INPUT → SSF (ns) $I_{(n)}$	INPUT → SSF (ns) CK	INPUT → SSF (ns) $B_{(n)}$	SSF SETUP TIME (ns)
CRC	00	X		–	23	42	34[†]	14
SNORM	20		X	–	23[†]	28	–	14
DNORM	30		X	–	23	40	34[†]	14
DIVRF	40		X	–	23[†]	27	–	14
SDIVQF	50		X	–	23[†]	–	–	14
SMULI	60	X		–	22[†]	27	–	0
SDIVIN	80		X	–	35	46	35[†]	0
SDIVIS	90		X	22[†]	42	48	42	0
SDIVI	A0		X	22[†]	42	46	42	0
UDIVIS	B0		X	16[†]	42	46	38	0
UDIVI	C0		X	16[†]	36	46	34	0
UMULI	D0	X		–	22[†]	27	–	0
SDIVIT	E0		X	21[†]	40	44	42	0
ABX	48		X	–	28	46	30[†]	14
SMTC	58		X	–	24	44	30[†]	14
BINEX3	DF		X	–	23[†]	27	–	14
LOADMQ (Arith)		X		19[†]	28	40	30	0
LOADMQ (Log)		X		–	28	35	30[†]	0
BADD	88	↑ SOURCE IS MOST SIGNIFICANT BYTE SELECTED ↓		16[†]	42	42	40	–
BSUBS	98			16[†]	42	40	40	–
BSUBR	A8			16[†]	42	50	40	–
BINCS	B8			16[†]	42	46	40	–
BINCNS	C8			16[†]	42	54	42	–
BXOR	D8			–	42	–	–	–
BAND	E8			–	42	–	–	–
BOR	F8			–	42	–	–	–
EX3BC	8F			–	42	42	42[†]	–

[†] This parameter limits normal system performance.

SN54AS890, SN74AS890
MICROSEQUENCERS

D2662, NOVEMBER 1982 REVISED APRIL 1985

- 14 Bits Wide—Addresses up to 16,384 Words of Microcode with One Chip
- Selects Address from One of Eight Sources
- STL-AS Technology
- Independent Read Pointer for Aid in Microcode Diagnostics
- Supports Real-Time Interrupts
- Two Independent Loop Counters
- Supports 64 Powerful Instructions
- Dependable Texas Instruments Quality and Reliability

description

The 'AS890 is a powerful microsequencer that is the result of the implementation of TI's Advanced Schottky and Schottky Transistor Logic. Approximately 2400 Schottky gate equivalents are used to construct this high-performance sequencer. The 'AS890 can generate an address and provide register status in only 29 ns while typically requiring only 1.8 watts of power. All internal STL logic in these devices operates on a 2-volt power supply that must be supplied externally. The information generated by the internal STL logic is communicated in the rest of the system via 5-volt Advanced Schottky TTL-compatible I/O ports.

The microsequencers select a 14-bit microaddress from one of eight sources to provide the proper microinstruction sequence for bit-slice processor or other microcode based systems. These high-performance devices are capable of addressing 16,384 control store memory locations either sequentially or via conditional branching algorithms. This multiway branching capability, coupled with a nine-word deep FILO (first in, last out) stack, allows the microprogrammer to arrange his code in blocks so that microprograms may be structured in the same fashion as such high-level languages as ALGOL, Pascal, or Ada.

Both polled and real-time interrupt routines are supported by the 'AS890 to enhance system throughput capability. Vectored interrupts may occur during any instruction, including PUSHes and POPs.

SN74AS890 . . . GB PACKAGE
(TOP VIEW)

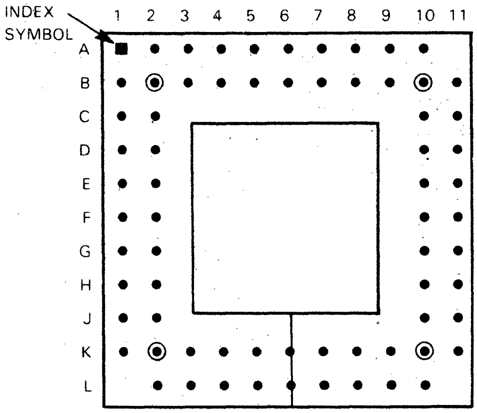
INDEX SYMBOL
1 2 3 4 5 6 7 8 9 10 11
A
B
C
D
E
F
G
H
J
K
L

AS890

PIN NO.	PIN NAME	PIN NO.	PIN NAME	PIN NO.	PIN NAME	PIN NO.	PIN NAME
A 2	DRB10	B 9	STKWRN RER	F 10	V_{CC1}	K 4	DRA13
A 3	DRB9	B 10	ZERO	F 11	MUX2	K 5	DRA11
A 4	DRB8	B 11	CK	G 1	Y5	K 6	DRA8
A 5	DRB7	C 1	Y13	G 2	$\overline{\mathrm{YOE}}$	K 7	DRA7
A 6	DRB6	C 2	Y10	G 10	RC1	K 8	DRA0
A 7	DRB5	C 10	$\overline{\mathrm{CC}}$	G 11	MUX1	K 9	DRA1
A 8	DRB4	C 11	S1	H 1	Y4	K 10	DRA3
A 9	DRB3	D 1	Y12	H 2	Y6	K 11	DRA2
A 10	DRB1	D 2	Y9	H 10	B0	L 2	B2
B 1	DRB13	D10	S2	H 11	MUX0	L 3	INC
B 2	$\overline{\mathrm{INT}}$	D 11	S0	J 1	Y3	L 4	DRA12
B 3	DRB12	E 1	Y11	J 2	Y2	L 5	DRA10
B 4	DRB11	E 2	Y8	J 10	RC2	L 6	DRA9
B 5	B3	E 10	V_{CC2}	J 11	OSEL	L 7	$\overline{\mathrm{RAOE}}$
B 6	$\overline{\mathrm{RBOE}}$	E 11	RCO	K 1	Y1	L 8	DRA6
B 7	DRB2	F 1	Y7	K 2	Y0	L 9	DRA5
B 8	DRB0	F 2	GND	K 3	B1	L 10	DRA4

SN54AS890 . . . FD PACKAGE
SN74AS890 . . . FN PACKAGE
(TOP VIEW)

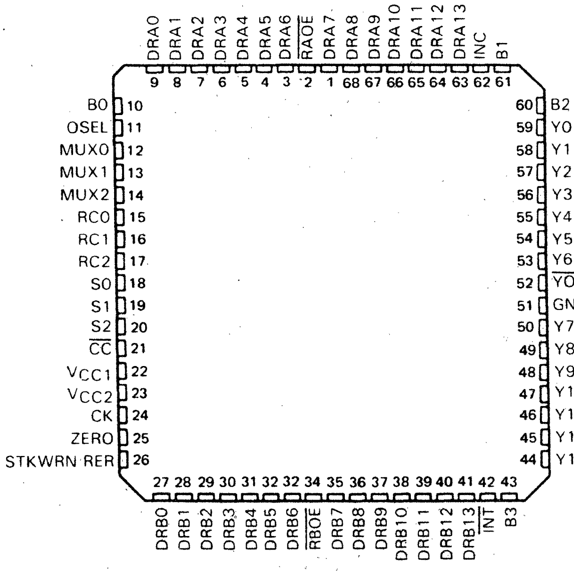
DRA0 9
DRA1 8
DRA2 7
DRA3 6
DRA4 5
DRA5 4
DRA6 3
RAOE 2
DRA7 1
DRA8 68
DRA9 67
DRA10 66
DRA11 65
DRA12 64
DRA13 63
INC 62
B1 61
B0 10
OSEL 11
MUX0 12
MUX1 13
MUX2 14
RC0 15
RC1 16
RC2 17
S0 18
S1 19
S2 20
CC 21
VCC1 22
VCC2 23
CK 24
ZERO 25
STKWRN RER 26
60 B2
59 Y0
58 Y1
57 Y2
56 Y3
55 Y4
54 Y5
53 Y6
52 YOE
51 GND
50 Y7
49 Y8
48 Y9
47 Y10
46 Y11
45 Y12
44 Y13
27 DRB0
28 DRB1
29 DRB2
30 DRB3
31 DRB4
32 DRB5
32 DRB6
34 RBOE
35 DRB7
36 DRB8
37 DRB9
38 DRB10
39 DRB11
40 DRB12
41 DRB13
42 INT
43 B3

PRODUCTION DATA
This document contains information current as of publication date. Products conform to specifications per the terms of Texas Instruments standard warranty. Production processing does not necessarily include testing of all parameters.

Copyright © 1982, Texas Instruments Incorporated

TEXAS INSTRUMENTS
POST OFFICE BOX 225012 • DALLAS, TEXAS 75265

functional block diagram

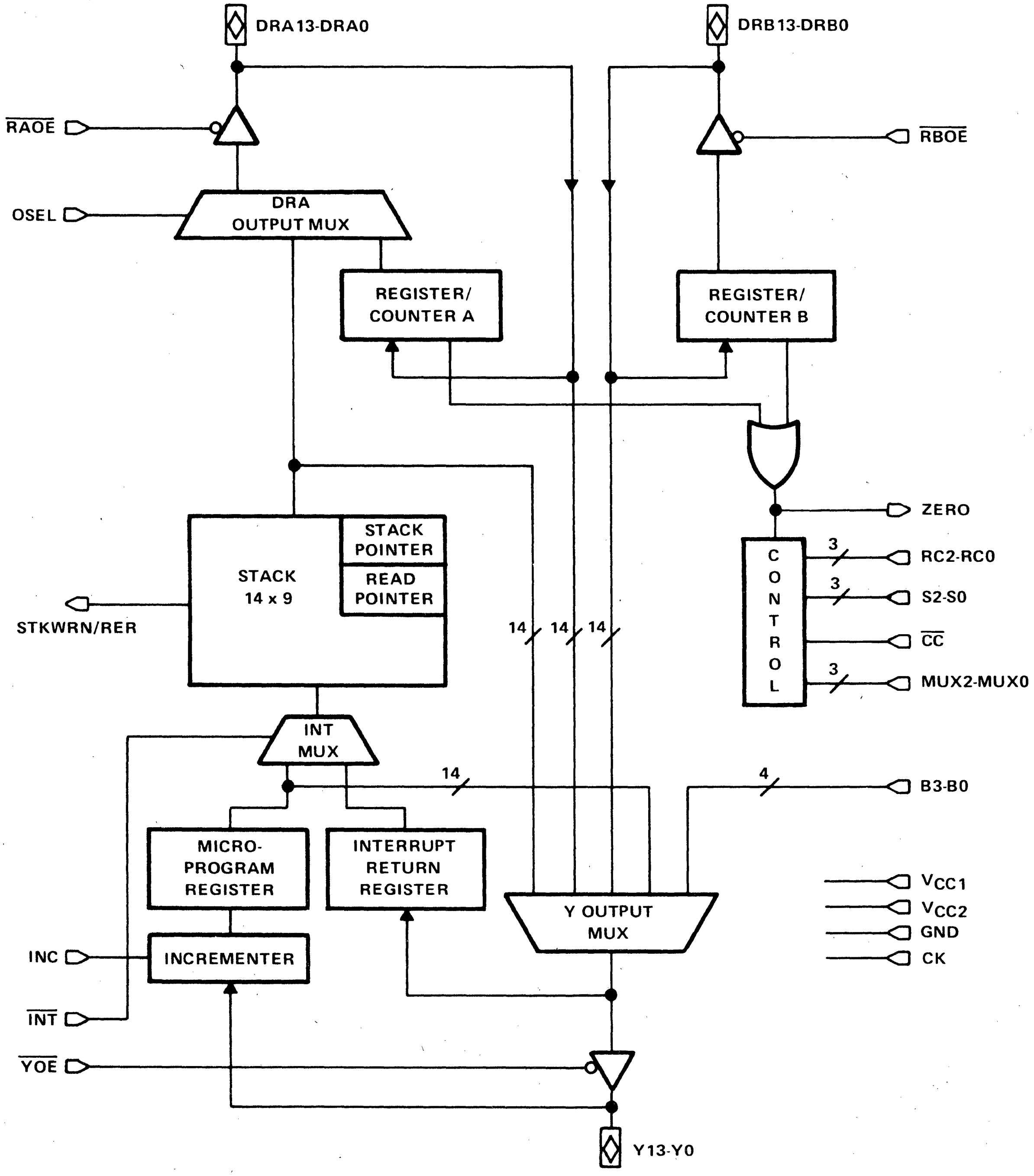
DRA13-DRA0
DRB13-DRB0
RAOE
RBOE
OSEL
DRA OUTPUT MUX
REGISTER/ COUNTER A
REGISTER/ COUNTER B
ZERO
STACK 14 x 9
STACK POINTER
READ POINTER
STKWRN/RER
14
14
14
C O N T R O L
3
RC2-RC0
3
S2-S0
CC
3
MUX2-MUX0
INT MUX
14
4
B3-B0
MICRO-PROGRAM REGISTER
INTERRUPT RETURN REGISTER
Y OUTPUT MUX
VCC1
VCC2
GND
CK
INC
INCREMENTER
INT
YOE
Y13-Y0

pin descriptions

PIN NAME	I/O	PIN FUNCTION
$\overline{\text{RAOE}}$	In	Enables DRA output, active low
DRA6-DRA0	In/Out	Seven LSBs of the A direct data I/O port
OSEL	In	MUX control for the source to DRA. Low selects RA, high selects stack.
MUX2-MUX0	In	MUX control for Y output bus (see Table 1)
RC2-RC0	In	Register/counter controls (see Table 3)
S2-S0	In	Stack control (see Table 2)
$\overline{\text{CC}}$	In	Condition code
V_{CC1}		5-volt supply for TTL compatible I/O
V_{CC2}		2-volt supply for internal STL
CK	In	Clock
ZERO	Out	Zero detect flag for register A and B
STKWRN/RER	Out	Stack overflow, underflow/read error flag
DRB6-DRB0	In/Out	Seven LSBs of the B direct data I/O port (0 = LSB)
$\overline{\text{RBOE}}$	In	Enables DRB output, active low
DRB13-DRB7	In/Out	Seven MSBs of the B direct data I/O port
$\overline{\text{INT}}$	In	Active low selects INT RT register to stack
Y13-Y8	In/Out	Six MSBs of bidirectional Y port
GND		Ground
Y7	In/Out	Seventh bit of bidirectional Y port
$\overline{\text{YOE}}$	In	Enables Y output bus, active low
Y6-Y0	In/Out	Seven LSBs of bidirectional Y port (0 = LSB)
INC	In	Incrementer control
DRA13-DRA7	In/Out	Seven MSBs of direct B data I/O port
B3-B0	In	16-way branch inputs on

description (continued)

Two 14-bit loadable registers/counters may be used for temporary storage of data or utilized as down counters for repetitive instructions such as multiplication and division or as loop counters when iterative routines are required.

An additional feature is a 24-bit port that appends four user-definable bits to the DRA or DRB address value for support of 16-way branches for the execution of relative branch addressing schemes.

Y output multiplexer

The Y output multiplexer of the 'AS890 is capable of selecting the next branch address from one of eight locations. Addresses may be sourced from:

1. The top of the 14-bit by 9-word address stack
2. An external input on the DRA port, potentially a pipeline register
3. An external input on the DRB port, potentially a pipeline register
4. Internal register/counter A
5. Internal register/counter B
6. An internal microprogram counter (MPC register)
7. An external input onto the bidirectional Y output port
8. A 16-way branch—4 bits appended to DRA, DRB, register/counter A or register/counter B.

The source of the next address is dependent upon the previous state of the microsequencer, the MUX controls (MUX2-MUX0), the condition code ($\overline{\text{CC}}$) input, and the state of an internal status flag (status externally available at the ZERO output) that indicates that one of the on-chip registers is being decremented to zero.

The entire instruction set may be made conditional by manipulation of the condition code ($\overline{\text{CC}}$) input. Allowing the $\overline{\text{CC}}$ value to vary as a result of data or status provides for state-dependent or data-dependent branching. Unconditional branches may be achieved by forcing $\overline{\text{CC}}$ high when selecting control store addresses. Holding this pin low will provide for conditional or unconditional branches as dictated by the state of the zero-detect flag. The required control signals for selection of the Y output source are listed in Table 1. Note that the dependence of the 'AS890 on two variables for conditional branches and jumps allows a conditional branch or conditional jump to subroutine in any clock cycle. Also note that all multiplexer inputs are overridden when all of the stack control inputs are pulled low. This instruction resets the stack and read pointers to zero and places all lines of the Y output bus at the low level.

TABLE 1. Y OUTPUT CONTROL

MUX CONTROL			RESET*	Y OUTPUT SOURCE		Y OUTPUT SOURCE
				$\overline{\text{CC}}$ = L		$\overline{\text{CC}}$ = H
MUX2	MUX1	MUX0		ZERO = L	ZERO = H	
X	X	X	YES	ALL LOW	ALL LOW	ALL LOW
L	L	L	NO	STK	MPC	DRA
L	L	H	NO	STK	MPC	DRB
L	H	L	NO	STK	DRA	MPC
L	H	H	NO	STK	DRB	MPC
H	L	L	NO	DRA	MPC	DRB
H	L	H	NO	DRA' (16-WAY BRANCH)	MPC	DRB' (16-WAY BRANCH)
H	H	L	NO	DRA	STK	MPC
H	H	H	NO	DRB	STK	MPC

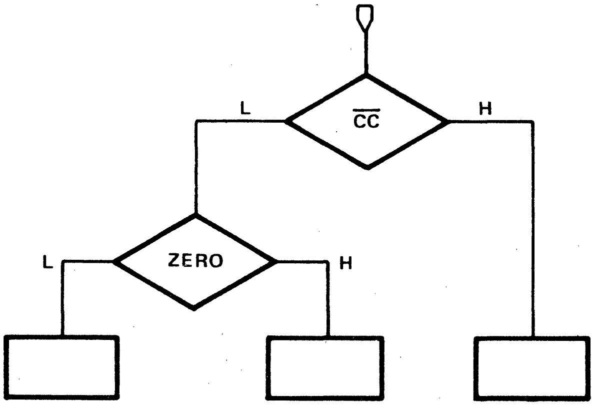

H = high level, L = low level, X = irrelevant.
*Reset command is implemented by setting S2-S0 = LLL.

14-bit by 9-word address stack

The positive-edge-triggered 14-bit address stack supplies on-board storage of nine control store addresses that support up to nine nested levels of microsubroutine, looping, and real-time interrupt functions. The stack pointer (SP), which operates as an up-down counter, is updated after the execution of each PUSH operation and before each POP. In a PUSH operation, the address stored in the MPC register is loaded into the stack location addressed by the stack pointer, and the stack pointer is incremented. This address is available at the DRA port by enabling DRA ($\overline{\text{RAOE}}$ low and OSEL high).

A POP operation causes the stack pointer to be decremented on the first rising clock edge following the arrival of the POP instruction at the S2-S0 pins. The value that was indexed by the stack pointer is effectively removed from the top of the stack. All PUSH and POP instructions are conditionally dependent upon the stack control inputs (S2-S0), the condition code ($\overline{\text{CC}}$), the input value, and the zero-detect status. The desired option may be selected using the stack control inputs listed in Table 2.

TABLE 2. STACK CONTROL

STACK	CONTROL			STACK OPERATION, $\overline{\text{CC}}$ = L		
S2	S1	S0	OSEL	ZERO = L	ZERO = H	$\overline{\text{CC}}$ = H
L	L	L	X	RESET/CLEAR	RESET CLEAR	RESET CLEAR
L	L	H	X	CLEAR SP, RP	HOLD	HOLD
L	H	L	X	HOLD	POP	POP
L	H	H	X	POP	HOLD	HOLD
H	L	L	X	HOLD	PUSH	PUSH
H	L	H	X	PUSH	HOLD	HOLD
H	H	L	X	PUSH	HOLD	PUSH
H	H	H	H	READ	READ	READ
H	H	H	L	HOLD	HOLD	HOLD

The read pointer (RP) is a useful tool in debugging microcoded systems. A microprogrammer now has the ability to perform a nondestructive, sequential read of the stack contents from the DRA port. This capability provides the user with a method of backtracking through the address sequence to determine the cause of overflow without affecting program flow, the status of the stack-pointer or the internal data of the stack. Placing a high value on all of the stack inputs (S2-S0) and OSEL places the 'AS890 into the read mode. At each low-to-high clock transition, the value pointed to by the read pointer is available at the DRA port and the read pointer is decremented. Microcode diagnostics are simplified by the ability of the 'AS890 to sequentially dump the contents of its stack. The bottom of the stack is detected by monitoring the STKWRN/RER (stack warning/read error) pin. A high will appear when the stack contains one word and a READ instruction is applied to the S2-S0 pins. This signifies that the last address has been read. The stack pointer and stack contents are uneffected by the READ operation. Under normal PUSH and POP operations the read pointer is updated with the stack pointer and contains identical information.

The STKWRN/RER pin alerts the system to a potential stack overflow or underflow condition. STKWRN/RER becomes active under two additional conditions. If seven of the nine stack locations (0-8) are full (the stack pointer is at 7) and a PUSH occurs, the STKWRN/RER pin will produce a high-level signal to warn that the stack is approaching its capacity, and will be full after one more PUSH. Knowledge that overflow potential exists allows bit-slice-based systems to continuously process real-time interrupt vectors. This signal will remain high, if HOLD, PUSH, or POP instructions occur, until the stack pointer is decremented to 7.

The user may be protected from attempting to POP an empty stack by monitoring STKWRN/RER before POP operations. A high level at this pin signifies that the last address has been removed from the stack (SP = 0). This condition remains until an address is pushed onto the stack and the stack pointer is incremented to one.

Clearing the stack and read pointer is accomplished by placing low levels onto the stack control lines (S2-S0). This function overrides all of the Y output MUX controls and places the Y bus into a low state.

register/counters

Two loadable 14-bit registers extend the looping and branching capabilities. Addresses may be loaded directly into register/counter A (RA) and register/counter B (RB) through the direct data ports DRA13-DRA0 and DRB13-DRB0. The values stored in these registers may either be held, decremented, or read as a result of the register control inputs (RC2-RC0), $\overline{\text{RAOE}}$, and $\overline{\text{RBOE}}$. All combinations of these functions are supported with the exception of a simultaneous decrement of both registers. Generation of iteration routines may be accomplished by loading RA and/or RB and operating them as a down counter. Loop termination is acknowledged by the ZERO output going high to indicate that a register contains a binary one and that a decrement is about to take place. Because of this facility, a "decrement and branch on loop" termination may be executed in the same clock cycle.

The contents of RA are accessible to the DRA port when OSEL is low and the output bus is enabled by RAOE being low. Data from RB is available when DRB is enabled by $\overline{\text{RBOE}}$ being low. Note that control of the registers is maintained while an external value is active on the DRA and DRB ports. A value being directed from the DRA and DRB buses to the output will not inhibit the decrement operation.

Register/counter controls are listed in Table 3.

TABLE 3. REGISTER CONTROL

RC2	RC1	RC0	REG A	REG B
L	L	L	HOLD	HOLD
L	L	H	DEC	HOLD
L	H	L	LOAD	HOLD
L	H	H	DEC	LOAD
H	L	L	LOAD	LOAD
H	L	H	HOLD	DEC
H	H	L	HOLD	LOAD
H	H	H	LOAD	DEC

microprogram register and increment

The microprogram register (MPC) and the incrementer (INC) provide the means for generating the next microprogram address for sequential addressing operations. The MPC may be loaded with either the outgoing address on the Y bus or may receive an external address for processing interrupt vectors.

The current address on the Y bus is passed to the MPC at each rising clock edge, either unaltered (INC low) for repeating statements, or incremented by one (INC high) for addressing sequential control store locations.

The MPC may also be externally loaded for subroutine and interrupt functions. Taking $\overline{\text{YOE}}$ high and forcing the new address onto the bidirectional Y bus loads the MPC with the new address at the positive clock edge. This value may also be incremented prior to storage in the MPC for sequential addressing of subroutines or interrupt routines.

interrupts

Real-time vectored interrupt routines are supported for those applications where polling would impede system throughput. Any instruction, including PUSHes and POPs, may be interrupted. To process an interrupt, the following procedure should be followed:

1. The bidirectional Y bus is placed into the high-impedance state by forcing $\overline{\text{YOE}}$ high.
2. The interrupt entry point vector is then forced onto the Y bus and incremented to become the second microinstruction of the interrupt routine. This is accomplished by making INC high.

3. At the following clock edge, the second microaddress is stored in the MPC and the interrupted address will be stored in the INT RT register which always contains the outgoing value on the Y bus. This edge also causes the processor to begin execution of the first instruction of the interrupt routine. This first instruction must PUSH the address stored in the INT RT register onto the stack so that the proper return linkage is maintained. This is accomplished by making $\overline{\text{INT}}$ low and performing a PUSH. If this instruction were to be interrupted, the process would be repeated and the proper return linkage preserved.

control inputs

A listing of the response of internal elements to various control inputs is given in Table 4.

TABLE 4. RESPONSE TO CONTROL INPUTS

PIN NAME	LOGIC LEVEL	
	HIGH	LOW
$\overline{\text{RAOE}}$	DRA output in high-Z state	DRA output is active
$\overline{\text{RBOE}}$	DRB output in high-Z state	DRB output is active
$\overline{\text{YOE}}$	Y output in high-Z state	Y output is active
$\overline{\text{INT}}$	MPC to stack	INT RT register to stack
OSEL	Stack to DRA buffer input	RA to DRA buffer input
INC	Adds one to Y output and stores in MPC	Passes Y output to MPC unaltered
MUX2-MUX0	Table 1	Table 1
S2-S0	Table 2	Table 2
RC2-RC0	Table 3	Table 3

instruction set

Sixty-four microsequencing instructions enable the 'AS890 to generate micro-addresses for up to 16,384 locations. Any instruction can be made conditional depending upon the value of the externally applied condition code ($\overline{\text{CC}}$) and the value stored in either of the internal register/counters.

The required signals for selection of the Y output source were listed in Table 1. Suggested methods for implementing a few commonly used instructions are given in Table 5 and flowcharts showing execution examples are illustrated in Figure 1.

It should be noted that the term jump refers to a subroutine call that must be accompanied by a return instruction. The term branch implies that a deviation from the program flow is accomplished but no return is required.

TABLE 5. SUGGESTED CODING FOR REPRESENTATIVE INSTRUCTIONS

FUNCTION	MNEMONIC	MUX2	MUX1	MUX0	S2	S1	S0	$\overline{CC}$	FIGURE
Continue	CONT	X	H	X	H	H	H	H	1(a)
Unconditional branch	BR	L	L	X	H	H	H	H	1(b)
Conditional branch	CBR	H	H	X	H	H	H	V	1(c)
Three way branch	BR2W	H	L	L	H	H	H	V	1(d)
Conditional loop on stack	LOOPS	L	L	X	L	H	L	L	1(e)
Repeat	REPEAT	L	L	X	H	H	H	L	1(f)
Loop on stack with exit	LSWE	L	L	X	L	H	L	V	1(g)
Conditional jump to subroutine	CJSR	H	H	X	H	L	H	V	1(h)
Jump to subroutine	JSR	L	L	X	H	L	H	H	1(i)
Two way jump to subroutine	JSR2W	H	L	L	H	H	L	V	1(j)
Repeat until	UNTIL	L	H	X	L	H	L	V	1(k)
Return from subroutine	RTS	L	H	X	L	H	H	L	1(l)
Conditional return from subroutine	CRTS	L	H	X	L	H	H	V	1(m)
Conditional return from subroutine or branch	CRTSB	L	H	X	L	H	H	V	1(n)
Conditional branch and PUSH	CBRP	H	H	X	H	L	H	V	1(o)
Conditional branch and POP	CBRPO	H	H	X	L	H	H	V	1(p)
PUSH and continue	PUSH	L	H	X	H	L	L	H	1(q)
POP and continue	POP	X	H	X	L	H	L	H	1(r)
Exit from loop	EXITLP	L	L	X	L	H	L	V	1(s)
Reset and clear stack/read pointer	RESET	X	X	X	L	L	L	X	1(t)
32-way branch	BR32W	H	L	H	H	H	H	V	1(u)
Execute n times	NEX	L	L	X	L	H	L	L	1(v)

H = high level, L = low level, X = irrelevant, V = varies (condition code value is dependent upon machine and data status and will vary accordingly).

absolute maximum ratings over operating temperature range (unless otherwise noted)

Supply voltage, V_{CC1}	7 V
Supply voltage, V_{CC2}	3 V
Input voltage: All inputs	7 V
I/O ports	5.5 V
Operating case temperature range, SN54AS890	-55°C to 125°C
Operating free-air temperature range, SN74AS890	0°C to 70°C
Storage temperature range	65°C to 150°C

recommended operating conditions

			SN54AS890			SN74AS890			UNIT
			MIN	NOM	MAX	MIN	NOM	MAX	
V_{CC1}	I/O supply voltage		4.5	5	5.5	4.5	5	5.5	V
V_{CC2}	STL internal logic supply voltage		1.9	2	2.1	1.9	2	2.1	V
V_{IH}	High-level input voltage		2			2			V
V_{IL}	Low level input voltge				0.8			0.8	V
I_{OH}	High-level output current				-1			-2.6	mA
I_{OL}	Low-level output current	All outputs except Y13-Y0			8			8	mA
		Y13-Y0			12			12	
T_C	Operating case temperature		-55		125				°C
T_A	Operating free air temperature					0		70	°C

electrical characteristics over recommended operating temperature range (unless otherwise noted)

PARAMETER		TEST CONDITIONS		SN54AS890			SN74AS890			UNIT
				MIN	TYP[†]	MAX	MIN	TYP[†]	MAX	
V_{IK}		V_{CC1} = 4.5 V,	I_I = -18 mA			-1.2			-1.2	V
V_{OH}		V_{CC1} = 4.5 V to 5.5 V,	I_{OH} = -0.4 mA	$V_{CC}-2$			$V_{CC}-2$			V
		V_{CC1} = 4.5 V,	I_{OH} = -1 mA	2.4	3.4					
		V_{CC1} = 4.5 V,	I_{OH} = -2.6 mA				2.4			
V_{OL}	All outputs except Y13-Y0	V_{CC1} = 4.5 V,	I_{OL} = 8 mA			0.5			0.5	V
	Y13-Y0	V_{CC1} = 4.5 V,	I_{OL} = 12 mA			0.5			0.5	
I_I	Inputs	V_{CC1} = 5.5 V,	V_I = 7 V			0.1			0.1	mA
	I/O ports	V_{CC1} = 5.5 V,	V_I = 5.5 V			0.1			0.1	
I_{IH}	Inputs	V_{CC1} = 5.5 V,	V_I = 2.7 V			20			20	μA
	I/O ports[‡]					40			40	
I_{IL}[‡]		V_{CC1} = 5.5 V,	V_I = 0.4 V			-0.4			-0.4	mA
I_O[§]		V_{CC1} = 5.5 V,	V_O = 2.25 V	-30		-112	-30		-112	mA
I_{CC1}		V_{CC1} = 5.5 V				185			178	mA
I_{CC2}		V_{CC2} = 2.1 V				420			400	mA

[†] All typical values are at V_{CC} = 5 V, T_A = 25°C.
[‡] For I/O ports, the parameters I_{IH} and I_{IL} include output current I_{OZL} and I_{OZL}, respectively.
[§] The output conditions have been chosen to produce a current that closely approximates one half of the true short circuit current, I_{OS}.

SN54AS890 maximum switching characteristics: V_{CC1} = 4.5 V to 5.5 V, V_{CC2} = 1.9 V to 2.1 V, T_C = 55 °C to 125 °C (see Note 2)

PARAMETER	FROM (INPUT)	TO (OUTPUT) Y	ZERO	DRA	DRB	STKWRN	UNIT
t_{pd}	$\overline{CC}$	32					ns
	CK	32		30	30	30	
		53†	42†				
	DRA13 DRA0	16					
	DRB13 DRB0	16					
	MUX2 MUX0	36					
	RC2-RC0	32	14				
	S2 S0	32					
	B2 B0	22					
	OSEL			24			
t_{en}	$\overline{YOE}$	16					ns
	$\overline{RAOE}$			16			
	$\overline{RBOE}$				16		
t_{dis}	$\overline{YOE}$	16					ns
	$\overline{RAOE}$			16			
	$\overline{RBOE}$				16		

† Decrementing Register/Counter A or B and sensing a zero.

NOTE 2: Load circuit and voltage waveforms are shown in Section 1

SN54AS890 setup and hold times

PARAMETER	FROM	TO (DESTINATION)	MIN	MAX	UNIT
t_{su}	$\overline{CC}$	Stack	10		ns
	DRA13-DRA0	RCA, INT RT	5		
	DRB13 DRB0	RCB, INT RT	5		
	INC	MPC	10		
	$\overline{INT}$	Stack	10		
	RC2-RC0	Stack	16		
		RCA, RCB	10		
		INT RT	14		
	S2 S0	Stack	10		
		INT RT	10		
	MUX2 MUX0	INT RT	14		
	B3 B0	INT RT	14		
	Y13 Y0	MPC	12		
t_h	Any Input	Any Destination	2		

SN54AS890 minimum clock requirements (see Note 3)

PARAMETER		MIN	MAX	UNIT
$t_{wL(CK)}$	Pulse duration, clock low	10		ns
$t_{wH(CK)}$	Pulse duration, clock high	20		
$t_{c(CK)}$	Clock cycle time	55†		
		45		

†Decrementing Register Counter A or B and sensing a zero.

NOTE 3: The total clock period of clock high and clock low must not be less than clock cycle time. The minimum pulse durations specified are only for clock high or clock low, but not for both simultaneously

SN74AS890 maximum switching characteristics: V_{CC1} = 4.5 V to 5.5 V, V_{CC2} = 1.9 V to 2.1 V, T_A = 0°C to 70°C (see Note 2)

PARAMETER	FROM (INPUT)	TO (OUTPUT) Y	ZERO	DRA	DRB	STKWRN	UNIT
t_{pd}	$\overline{CC}$	29					ns
	CK	29		29	29	29	
		50†	39†				
	DRA13-DRA0	15					
	DRB13 DRB0	15					
	MUX2-MUX0	35					
	RC2-RC0	30	13				
	S2-S0	28					
	B2-B0	20					
	OSEL			18			
t_{en}	$\overline{YOE}$	15					ns
	$\overline{RAOE}$			15			
	$\overline{RBOE}$				15		
t_{dis}	$\overline{YOE}$	16					ns
	$\overline{RAOE}$			16			
	$\overline{RBOE}$				16		

† Decrementing Register/Counter A or B and sensing a zero.

NOTE 2: Load circuit and voltage waveforms are shown in Section 1.

SN74AS890 setup and hold times

PARAMETER	FROM	TO (DESTINATION)	MIN	MAX	UNIT
t_{su}	$\overline{CC}$	Stack	10		ns
	DRA13 DRA0	RCA, INT RT	5		
	DRB13 DRB0	RCB, INT RT	5		
	INC	MPC	10		
	$\overline{INT}$	Stack	10		
	RC2 RC0	Stack	14		
		RCA, RCB	10		
		INT RT	12		
	S2 S0	Any Destination	10		
	MUX2-MUX0	INT RT	12		
	B3 B0	INT RT	14		
	Y13-Y0	MPC	10		
t_h	Any Input	Any Destination	2		

SN74AS890 minimum clock requirements (see Note 3)

PARAMETER		MIN	MAX	UNIT
$t_{wL(CK)}$	Pulse duration, clock low	10		ns
$t_{wH(CK)}$	Pulse duration, clock high	20		
$t_{c(CK)}$	Clock cycle time	50†		
		36		

†Decrementing Register/Counter A or B and sensing a zero.

NOTE 3: The total clock period of clock high and clock low must not be less than clock cycle time. The minimum pulse durations specified are only for clock high or clock low, but not for both simultaneously

TEXAS INSTRUMENTS
POST OFFICE BOX 225012 • DALLAS, TEXAS 75265

SN74AS890-1 maximum switching characteristics: V_{CC1} = 4.5 V to 5.5 V, V_{CC2} = 1.9 V to 2.1 V, T_A = 0°C to 70°C (see Note 2)

PARAMETER	FROM (INPUT)	TO (OUTPUT) Y	ZERO	DRA	DRB	STKWRN	UNIT
t_{pd}	$\overline{CC}$	25					ns
	CK	25		25	25	25	
		42†	34†				
	DRA13-DRA0	14					
	DRB13-DRB0	14					
	MUX2-MUX0	31					
	RC2-RC0	26	12				
	S2-S0	25					
	B2-B0	19					
	OSEL			17			
t_{en}	$\overline{YOE}$	15					ns
	$\overline{RAOE}$			15			
	$\overline{RBOE}$				15		
t_{dis}	$\overline{YOE}$	16					ns
	$\overline{RAOE}$			16			
	$\overline{RBOE}$				16		

† Decrementing Register/Counter A or B and sensing a zero.

NOTE 2: Load circuit and voltage waveforms are shown in Section 1.

SN74AS890-1 setup and hold times

PARAMETER	FROM	TO (DESTINATION)	MIN	MAX	UNIT
t_{su}	$\overline{CC}$	Stack	10		ns
	DRA13-DRA0	RCA, INT RT	5		
	DRB13-DRB0	RCB, INT RT	5		
	INC	MPC	10		
	$\overline{INT}$	Stack	10		
	RC2-RC0	Stack	14		
		RCA, RCB	10		
		INT RT	12		
	S2-S0	Any Destination	10		
	MUX2-MUX0	INT RT	12		
	B3-B0	INT RT	14		
	Y13-Y0	MPC	10		
t_h	Any Input	Any Destination	2		

SN74AS890-1 minimum clock requirements (see Note 3)

PARAMETER		MIN	MAX	UNIT
$t_{wL(CK)}$	Pulse duration, clock low	10		ns
$t_{wH(CK)}$	Pulse duration, clock high	20		
$t_{c(CK)}$	Clock cycle time	42†		
		34		

†Decrementing Register/Counter A or B and sensing a zero.

NOTE 3: The total clock period of clock high and clock low must not be less than clock cycle time. The minimum pulse durations specified are only for clock high or clock low, but not for both simultaneously.

SN54AS897, SN74AS897
16-BIT PARALLEL/SERIAL BARREL SHIFTERS

D2885, OCTOBER 1985

- **High-Speed "Flash" Shift Operations**
- **Expandable to 32 Bits**
- **Normalization with Leading Zero Detection**
- **Bit Reversal**
- **Merge Capabilities**
- **Texas Instruments Quality and Reliability**

description

The SN54AS897 and SN74AS897 are multipurpose 16-bit barrel shifters in a 68-pin ceramic pin-grid-array package. The device is capable of several different types of shift operations, as well as other more specialized functions such as normalization, bit replacement, and leading-zero detection.

The unique feature of all barrel shifters is how the shift function is implemented. In conventional shift registers, shift operations are controlled by the number of input clock pulses applied. With barrel shifters, the desired number of positions to be shifted is determined by an input decoder. This form of implementation does not require an input clock and results in a shift operation that is restricted only by internal propagation delays. This delay is the same regardless of the number of positions to be shifted. The result is a high-speed "flash" type of shift.

SN54AS897, SN74AS897
GB PIN-GRID-ARRAY PACKAGE
(TOP VIEW)

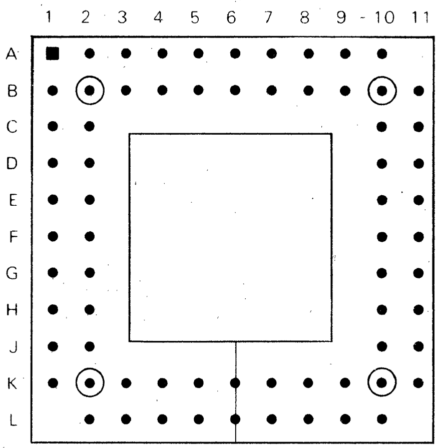

PIN ASSIGNMENT TABLE

PIN NO.	PIN NAME	PIN NO.	PIN NAME
A2	ZN1	F10	GND
A3	ZN2	F11	Y9
A4	ZN3	G1	D4
A5	GND	G2	GND
A6	$\overline{\text{NORM}}$	G10	Y11
A7	ZL	G11	Y8
A8	GND	H1	NC
A9	16B $\overline{\text{32B}}$	H2	D5
A10	OP	H10	GND
B1	D14	H11	Y7
B2	D13	J1	GND
B3	D15	J2	D3
B4	ZN0	J10	GND
B5	V_{CC2}	J11	GND
B6	ZN4	K1	D2
B7	IP	K2	D1
B8	V_{CC1}	K3	V_{CC1}
B9	GND	K4	M1
B10	S	K5	GND
B11	Y15	K6	CLK
C1	D12	K7	GND
C2	D9	K8	V_{CC2}
C10	Y13	K9	Y6
C11	Y12	K10	Y4
D1	D11	K11	Y5
D2	D8	L2	D0
D10	NC	L3	M2
D11	GND	L4	M0
E1	D10	L5	$\overline{\text{TP}}$
E2	D7	L6	$\overline{\text{OEY}}$
E10	Y14	L7	Y0
E11	Y10	L8	Y1
F1	GND	L9	Y2
F2	D6	L10	Y3

NC — No internal connection

Chip Carrier information available from factory upon request.

PRODUCTION DATA documents contain information current as of publication date. Products conform to specifications per the terms of Texas Instruments standard warranty. Production processing does not necessarily include testing of all parameters.

Copyright © 1985, Texas Instruments Incorporated

TEXAS INSTRUMENTS
POST OFFICE BOX 225012 • DALLAS, TEXAS 75265

functional block diagram (positive logic)

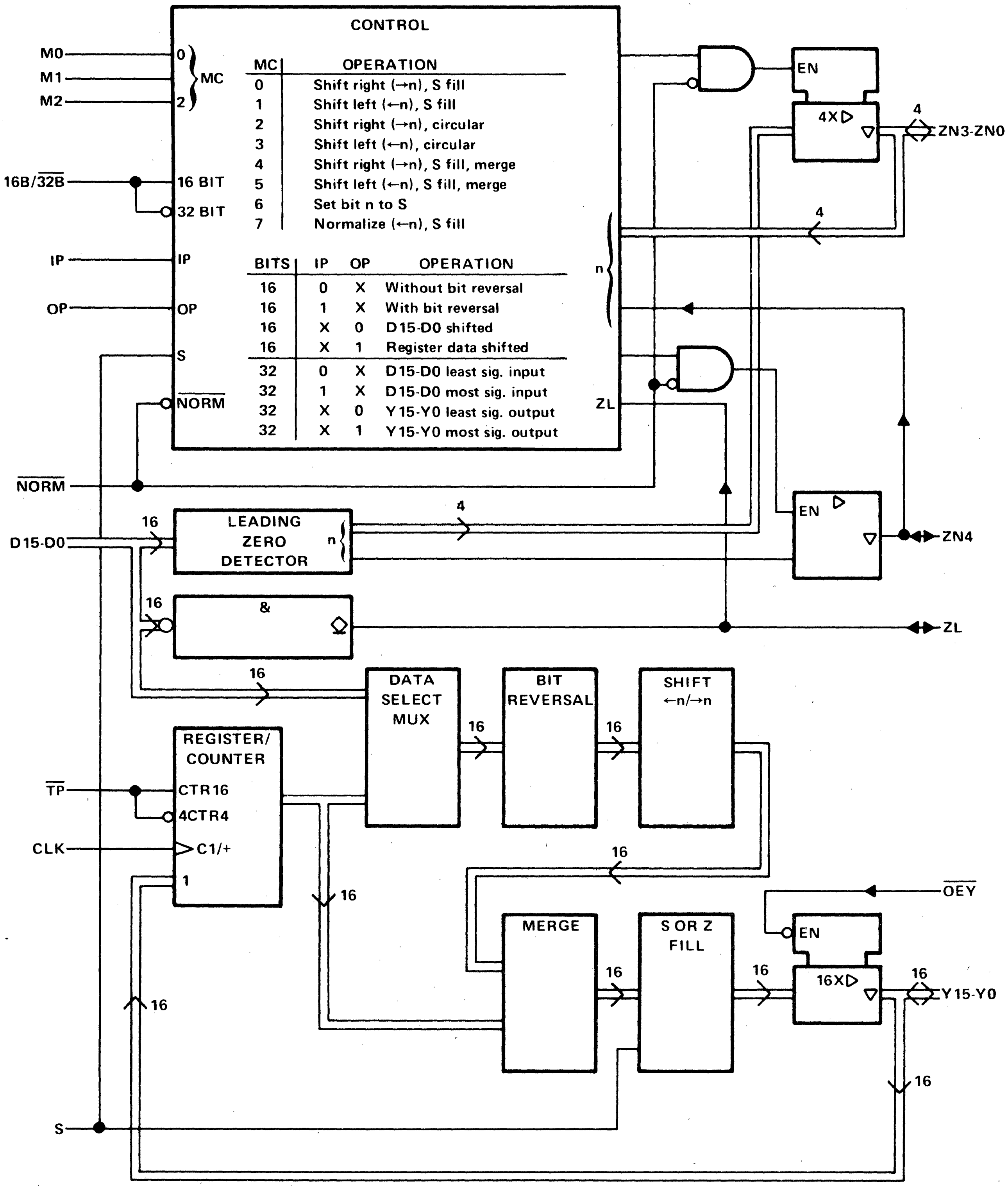

CONTROL

MC	OPERATION
0	Shift right (→n), S fill
1	Shift left (←n), S fill
2	Shift right (→n), circular
3	Shift left (←n), circular
4	Shift right (→n), S fill, merge
5	Shift left (←n), S fill, merge
6	Set bit n to S
7	Normalize (←n), S fill

BITS	IP	OP	OPERATION
16	0	X	Without bit reversal
16	1	X	With bit reversal
16	X	0	D15-D0 shifted
16	X	1	Register data shifted
32	0	X	D15-D0 least sig. input
32	1	X	D15-D0 most sig. input
32	X	0	Y15-Y0 least sig. output
32	X	1	Y15-Y0 most sig. output

M0
M1
M2
0
2
MC
16B/32B
16 BIT
32 BIT
IP
OP
S
NORM
n
ZL
EN
4X▷
▽
4
ZN3-ZN0
4
EN ▷
▽
ZN4
NORM
16
D15-D0
LEADING ZERO DETECTOR
n
4
16
&
ZL
16
DATA SELECT MUX
BIT REVERSAL
SHIFT ←n/→n
16
16
REGISTER/ COUNTER
TP
CTR16
4CTR4
CLK
C1/+
1
16
16
OEY
MERGE
S OR Z FILL
EN
16X▷
▽
16
16
16
Y15-Y0
16
16
S

PIN FUNCTIONAL DESCRIPTION

PIN		I/O	DESCRIPTION
NAME	NO.		
ZN0 ZN1 ZN2 ZN3	B4 A2 A3 A4	I/O I/O I/O I/O	A four-bit code that performs the following functions in the 16-bit mode: 1. As an input in shift instructions, specifies how many bit positions are to be shifted. 2. As an input in replace instructions, specifies position of the bit to be replaced. 3. As an input to the normalize instruction, specifies the number of left shifts to be performed. 4. As an output from the normalize instruction, when $\overline{\text{NORM}}$ = L, specifies the number of leading zeros in the data on D15-D0.
ZN4	B6	I/O	ZN4 is concatenated with ZN3-ZN0 for use in 32-bit shift operations as described above.
GND GND GND GND GND GND GND GND GND GND GND GND GND	A5 A8 B9 D11 F1 F10 G2 H10 J1 J10 J11 K5 K7		Ground (All ground pins should be used)
$\overline{\text{NORM}}$	A6	I	A three-state control input for ZN4-ZN0 I/O ports used only in normalize instructions. When $\overline{\text{NORM}}$ is low, the number of leading zeros detected in the data present on D15-D0 is output on ZN4-ZN0. When $\overline{\text{NORM}}$ is high, ZN4-ZN0 act only as inputs.
ZL	A7	I/O	An input/open-collector output used primarily in 32-bit applications. When the input at D15-D0 is zero, the ZL output is high. The ZL outputs of cascaded packages are connected in a wired-AND configuration to detect if all inputs are zero. A recommended pull-up resistor of 200-680 Ω must be provided externally for proper operation in the 32-bit mode.
16B/$\overline{\text{32B}}$	A9	I	When high, 16-bit operation is selected. When low, 32-bit operation is selected.
OP	A10	I	In the 16-bit mode, controls the source of input data. A logic high on this input selects data from the register/counter. A low selects data on the D15-D0 inputs. In the 32-bit mode, defines the package output positions. When OP is high, Y15-Y0 are in the most significant output position. When OP is low, Y15-Y0 are in the least significant output position.
IP	B7	I	In the 16-bit mode, controls the bit-reversal option. A high logic level causes data selected by OP to be bit-reversed before it is passed to the shifter. When IP is low, data is passed unaltered. In the 32-bit mode, defines the data input position. When IP is high, D15-D0 are in the most significant input position. When IP is low, D15-D0 are in the least significant position.

PIN FUNCTIONAL DESCRIPTION (Continued)

PIN NAME	PIN NO.	I/O	DESCRIPTION
D0	L2	I	Input data bits 0 through 15
D1	K2	I	
D2	K1	I	
D3	J2	I	
D4	G1	I	
D5	H2	I	
D6	F2	I	
D7	E2	I	
D8	D2	I	
D9	C2	I	
D10	E1	I	
D11	D1	I	
D12	C1	I	
D13	B2	I	
D14	B1	I	
D15	B3	I	
V_{CC2}	B5		2-volt supply for internal Schottky Transistor Logic (STL)
V_{CC2}	K8		
V_{CC1}	B8		5-volt supply for TTL-compatible I/O
V_{CC1}	K3		
S	B10	I	Specifies the logic level that will fill the bit position or positions vacated during all shift operations except 16-bit circular. In the 16-bit circular mode, when S is high, the data latch operates as a 16-bit binary counter. When S is low, the register functions as a data latch.
Y0	L7	I/O	Input/output bits 0-15. As an input, they load the data register. As an output, they present the shifted data.
Y1	L8	I/O	
Y2	L9	I/O	
Y3	L10	I/O	
Y4	K10	I/O	
Y5	K11	I/O	
Y6	K9	I/O	
Y7	H11	I/O	
Y8	G11	I/O	
Y9	F11	I/O	
Y10	E11	I/O	
Y11	G10	I/O	
Y12	C11	I/O	
Y13	C10	I/O	
Y14	E10	I/O	
Y15	B11	I/O	
NC	D10		No internal connection
NC	H1		
M0	L4	I	Shift instruction control. Determine the type of shift operation to be performed. See Table 1 for further information.
M1	K4	I	
M2	L3	I	
CLK	K6	I	Clock input. Loads the internal register on the low-to-high transition. In 16-bit circular mode, acts as clock for the 16-bit/14-bit counter.
$\overline{TP}$	L5	I	Functional testing input. When low, transforms the 16-bit counter into four 4-bit counters. During normal operation, $\overline{TP}$ must be maintained at a high logic level.
$\overline{OEY}$	L6	I	Control input for the Y15-Y0 I/O ports. When $\overline{OEY}$ is low, the Y outputs are enabled.

description (continued)

control block

The control block decodes the M2-M0 instruction inputs, 16B/$\overline{\text{32B}}$ configuration select, IP and OP data select/bit reversal options, and other control inputs and transmits the resulting control signals to the rest of the internal logic.

instruction set

The 'AS897 can operate in any of the eight user-programmable shift modes shown in Table 1. Selection of these instructions is controlled by pins M2-M0.

TABLE 1. INSTRUCTION SET

M2	M1	M0	DESCRIPTION
L	L	L	Shift right the number of bit positions defined by ZN3-ZN0 (16-bit mode) or ZN4-ZN0 (32-bit mode). Fill vacated bit positions with logic level on S input.
L	L	H	Shift left the number of bit positions defined by ZN3-ZN0 (16-bit mode) or ZN4-ZN0 (32-bit mode). Fill vacated bit positions with logic level on S input.
L	H	L	Circular right shift the number or bit positions defined by ZN3-ZN0 (16-bit mode) or ZN4-ZN0 (32-bit mode).
L	H	H	Circular left shift the number of bit positions defined by ZN3-ZN0 (16-bit mode) or ZN4-ZN0 (32-bit mode).
H	L	L	Shift right the number of bit positions defined by ZN3-ZN0 (16-bit mode) or ZN4-ZN0 (32-bit mode). Fill vacated bit positions with logic level on S input. Merge result with data from the register/counter.
H	L	H	Shift left the number of bit positions defined by ZN3-ZN0 (16-bit mode) or ZN4-ZN0 (32-bit mode). Fill vacated bit positions with logic level on S input. Merge result with data from the register/counter.
H	H	L	Set the bit position defined by ZN3-ZN0 (16-bit mode) or ZN4-ZN0 (32-bit mode) to the logic level on the S input.
H	H	H	If $\overline{\text{NORM}}$ is low, shift data left until the most significant bit contains a logic high. Fill vacated bit positions with logic level on S input. If $\overline{\text{NORM}}$ is low, output number of leading zeros in D15-D0 on ZN3-ZN0 (16-bit mode) or ZN4-ZN0 (32-bit mode). Note: If $\overline{\text{NORM}}$ is high, this instruction performs like the left shift described above for M2 = L, M1 = L, M0 = H.

mode configuration

The 'AS897 can be configured to operate on 16-bit or 32-bit words. Configuration is controlled by 16B/$\overline{\text{32B}}$. When 16B/$\overline{\text{32B}}$ is high, the 'AS897 operates in 16-bit mode.

Figure 1 illustrates the connection of four 'AS897s to provide a 32-bit barrel shifter that can perform all Table 1 shift instructions. For 32-bit mode operation, the 16B/$\overline{\text{32B}}$ inputs of all 'AS897 devices must be low and should be configured as shown in Figure 1.

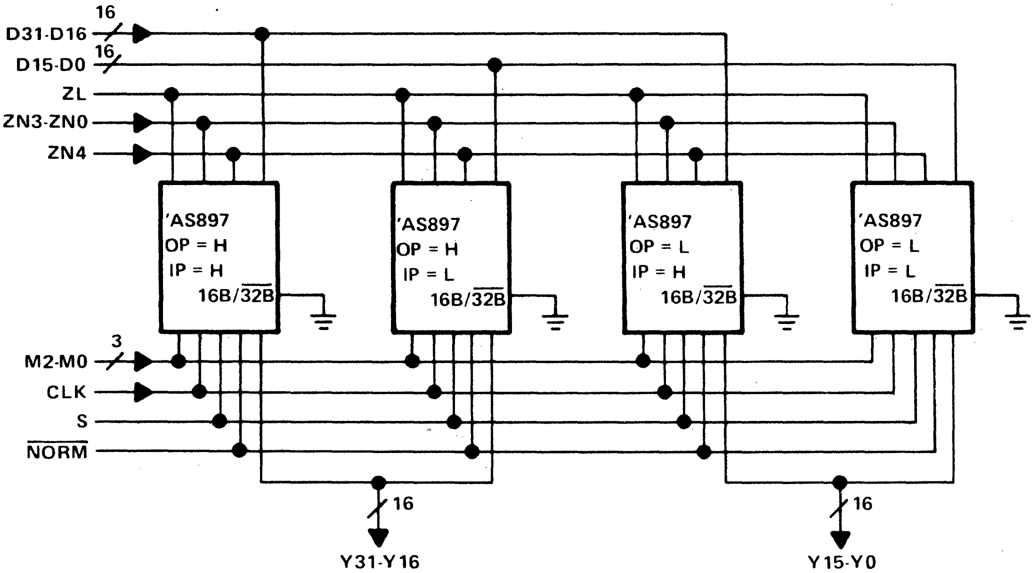

FIGURE 1. 32-BIT BARREL SHIFTER

data input/output

Data can be input to the chip from two ports: D15-D0, which passes data to the zero detector and to the shifter via the data select and bit-reversal multiplexers, and Y15-Y0, which passes data to the register/counter. Y15-Y0 is also used to output the shift result from the chip.

Data input and output positions in the 32-bit mode are defined by IP and OP (see Table 2). When IP is high, the D15-D0 port is the most significant input position; when IP is low, the D15-D0 input port is the least significant. If OP is high, the Y15-Y0 port is the most significant output position; if OP is low, the Y15-Y0 port is the least significant position.

TABLE 2. IP AND OP CONTROLS

SIGNAL	16-BIT OPERATION (16B/$\overline{32B}$ = H)	32-BIT OPERATION (16B/$\overline{32B}$ = L)
IP = L	Bit-reversal option off	D15-D0 is least significant input position
IP = H	Bit-reversal option on	D15-D0 is most significant input position
OP = L	D15-D0 is shifted	Y15-Y0 is least significant output position
OP = H	Register/counter data is shifted	Y15-Y0 is most significant output position

zero detector

The zero detector detects the number of leading zeros at the D15-D0 input port. If all zeros are detected, the ZL output transistor will be turned off. If the ZL output pin is pulled up through the recommended pull-up resistor (see pin description table), the resulting signal will be high. If anything other than a zero is detected on the D15-D0 inputs, the output transistor will be turned on; this will pull the ZL signal low.

During data normalization (M2 = H, M1 = H, M0 = H), the zero-detector outputs the leading zero count to the ZN4-ZN0 I/O ports, provided $\overline{\text{NORM}}$ is low. When $\overline{\text{NORM}}$ is high, ZN4-ZN0 act only as inputs in this mode. For operations other than normalization, the state of $\overline{\text{NORM}}$ is irrelevant.

In the data-normalization mode, a high logic level will be output on the ZN4 pin when the D15-D0 bus contains all lows and $\overline{\text{NORM}}$ is low (see Table 3).

TABLE 3. ZN4 I/O PORT

SIGNAL	I/O	16-BIT CONFIGURATION ($16B/\overline{32B}$ = H)	32-BIT CONFIGURATION ($16B/\overline{32B}$ = L)
ZN4	I	Inactive	With ZN3-ZN0 indicates number of bits to be shifted in shift operations and position of bit to be replaced in replace-bit mode.
	O	In the normalization mode, when $\overline{\text{NORM}}$ = L, indicates when the input to the shifter is zero	In the normalization mode, when $\overline{\text{NORM}}$ = L, ZN4-ZN0 indicates number of leading zeros detected in D15-D0 and number of places to be shifted for normalization.

data selector multiplexer

The data selector multiplexer is used only in 16-bit operation ($16B/\overline{32B}$ = H). OP controls the mux and selects the data to be presented to the bit-reversal block. OP high selects the register/counter; OP low selects D15-D0 (see Table 2).

bit reversal

Bit reversal is also available only in the 16-bit mode ($16B/\overline{32B}$ = H) and is controlled by IP (see Table 2). When the bit-reversal option is selected (IP = H), data selected by OP is bit-reversed before it is passed to the shifter: the most significant bit becomes the least significant bit, the second most significant bit becomes the second least significant bit, and so forth. When the bit-reversal option is off (IP = L), the data presented to the shifter is not altered.

register/counter

During most instructions, the register/counter operates as a data latch. Data on the Y15-Y0 bus is latched into the register/counter on the rising edge of the clock. Data can be input to the register/counter from the shifter ($\overline{\text{OEY}}$ = L) or from the bidirectional Y port ($\overline{\text{OEY}}$ = H).

In the 16-bit circular-shift mode ($16B/\overline{32B}$ = H, M2 = L, M1 = H, M0 = X), the register counter will function as a 16-bit counter on the rising edge of the clock when S is high. Under these same conditions, the register/counter will function as four 4-bit counters when $\overline{\text{TP}}$ is low. In the 16-bit circular-shift mode, the register/counter functions as a register when S is low. The counter option is not available for other instructions in the 16-bit mode or for any instructions in the 32-bit mode.

shifter

The shifter performs the operations specified by the M2-M0 inputs (see Table 1). The number of bits to be shifted or the position of the bit to be replaced is specified by ZN3-ZN0 (16-bit operation) or ZN4-ZN0 (32-bit operation).

merge

During the shift and merge instruction (M2 = H, M1 = L, M0 = X), the merge block ORs the shift result with data from the register/counter.

S or Z fill

During bit replacement (M2 = H, M1 = H, M0 = L) in the 16-bit mode, this block sets the bit specified on the ZN3-ZN0 inputs with the logic level on the S input. This option works identically in the 32-bit mode, except that the bit to be replaced is specified on the Z4-Z0 inputs.

Z fill is used in the 32-bit mode to selectively put the device outputs in a high-impedance state. This feature is necessary to properly select the correct bit locations that will combine to form the shifted output. An example of a 32-bit circular shift four positions to the right, which illustrates the Z-fill technique, is shown in Figure 2.

Figure 4 shows the three-device configuration. The limitation of this application is that only 23 bits of the 32 bits are used in the significand, and the sign bit must be set from hardware. As an alternate to the IEEE floating-point format, the same hardware configuration can be used to normalize a 32-bit data word resulting in a 32-bit significand and a five-bit exponent.

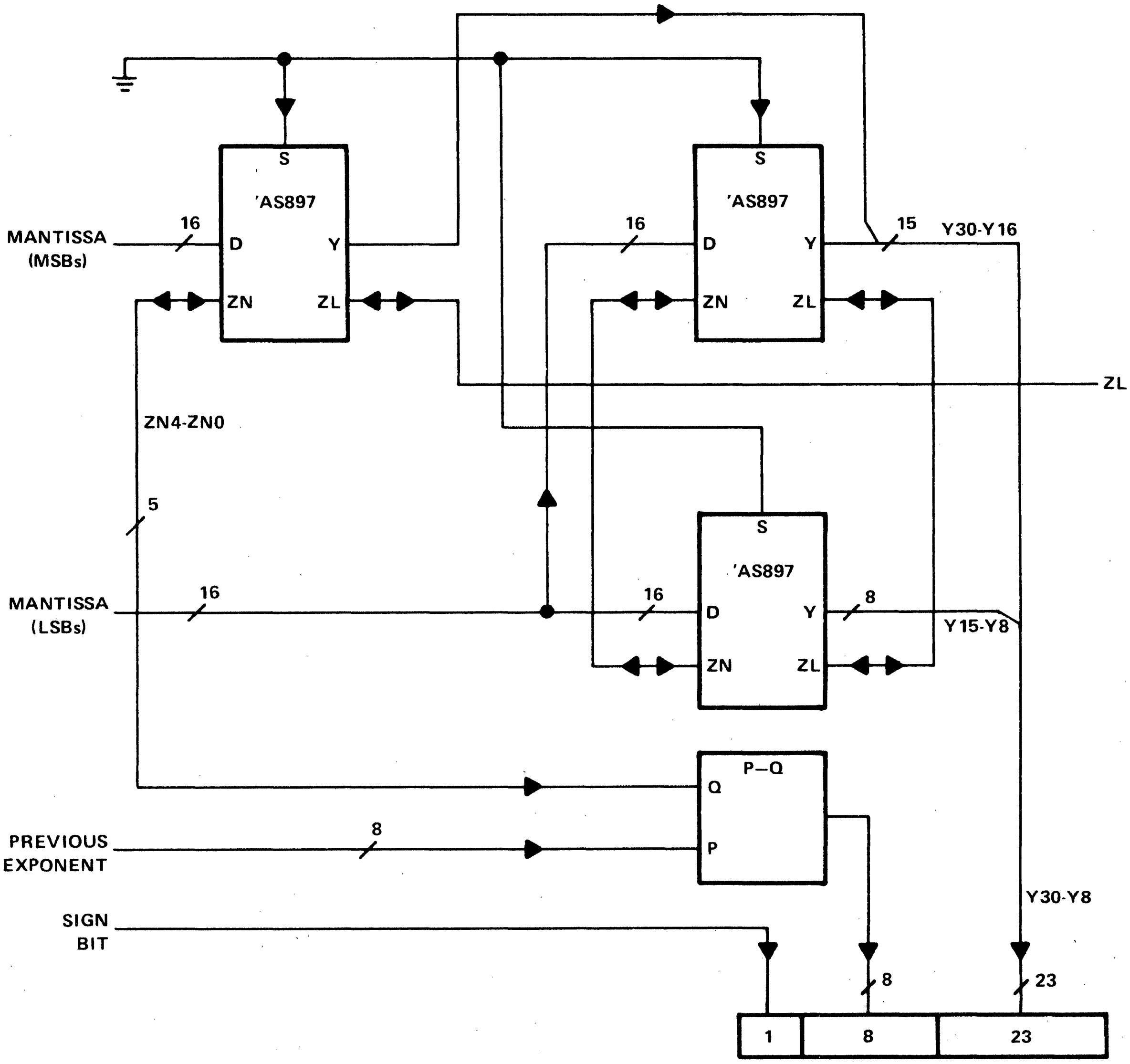
S
'AS897
MANTISSA (MSBs)
16
D
Y
ZN
ZL
S
'AS897
16
D
Y
15
Y30-Y16
ZN
ZL
ZL
ZN4-ZN0
5
S
'AS897
MANTISSA (LSBs)
16
16
D
Y
8
Y15-Y8
ZN
ZL
P–Q
Q
P
PREVIOUS EXPONENT
8
SIGN BIT
Y30-Y8
8
23
1
8
23

FIGURE 4. THREE-DEVICE CONFIGURATION FOR IEEE FLOATING-POINT FORMAT

Example

Input data in IEEE floating point format

Sign Bit	Exponent	Mantissa
1	0010 1001	.000 1001 0001 0001 0001 0001

Input mantissa concatenated with: 0 0000 0000 to D31-D0 of the 'AS897s

D31-D16	D15-D0
0001 0010 0010 0010	0010 0010 0000 0000

Normalize mantissa and output the leading zero count on ZN4-ZN0.

D31-D16	D15-D0	ZN4-ZN0
1001 0001 0001 0001	0001 0000 0000 0000	00011

Pack result in IEEE floating point format
Note: Exponent = old exponent − ZN4-ZN0

Sign Bit	Exponent	Mantissa
1	0010 1110	001 0001 0001 0001 0001 0000

absolute maximum ratings over operating free-air temperature range (unless otherwise noted)

Supply voltage, V_{CC1}	7 V
Supply voltage, V_{CC2}	3 V
Input voltage: I/O ports	5.5 V
All other inputs	7 V
Operating case temperature range: SN54AS897	−55°C to 125°C
Operating free-air temperature range: SN74AS897	0°C to 70°C
Storage temperature range	−65°C to 150°C

recommended operating conditions

			SN54AS897			SN74AS897			UNIT
			MIN	NOM	MAX	MIN	NOM	MAX	
V_{CC1}	Supply voltage		4.5	5	5.5	4.5	5	5.5	V
V_{CC2}	Supply voltage		1.9	2	2.1	1.9	2	2.1	V
V_{IH}	High-level input voltage		2			2			V
V_{IL}	Low-level input voltage				0.8			0.8	V
V_{OH}	High-level output voltage	ZL			5.5			5.5	V
I_{OH}	High-level output current	ZN4-ZN0			−0.4			−0.4	mA
		Y15-Y0			−1			−2.6	
I_{OL}	Low-level output current	ZN4-ZN0			4			8	mA
		ZL, Y15-Y0			12			24	
t_w	Pulse duration	CLK low	25			25			ns
		CLK high	15			15			
t_{su}	Setup time before CLK↑	Y15-Y0	14			12			ns
		S[†]	24			22			
		M0, M1, M2[†]	23			22			
		$16B/\overline{32B}$[‡]	32			30			
t_h	Hold time after CLK↑	Y15-Y0[‡]	5			5			ns
		S[†]	0			0			
		M0, M1, M2[†]	0			0			
		$16B/\overline{32B}$[‡]	5			5			
T_A	Operating free-air temperature					0		70	°C
T_C	Operating case temperature		−55		125				°C

[†] These parameters only apply in the circular mode and with $16B/\overline{32B}$ high.
[‡] These parameters only apply in the circular mode.

electrical characteristics over recommended operating temperature range (unless otherwise noted)

PARAMETER		TEST CONDITION		SN54AS897			SN74AS897			UNIT
				MIN	TYP[†]	MAX	MIN	TYP[†]	MAX	
V_{IK}		V_{CC} = 4.5 V,	I_I = 18 mA			−1.5			−1.5	V
I_{OH}	ZL	V_{CC} = 4.5 V,	V_{OH} = 5.5 V			0.1			0.1	mA
V_{OH}	All outputs	V_{CC} = 4.5 V to 5.5 V,	I_{OH} = −0.4 mA	$V_{CC}-2$			$V_{CC}-2$			V
	Y15-Y0	V_{CC} = 4.5 V,	I_{OH} = −1 mA	2.4	3.2					V
		V_{CC} = 4.5 V,	I_{OH} = −2.6 mA				2.4	3.2		
V_{OL}	ZN4-ZN0	V_{CC} = 4.5 V,	I_{OL} = 4 mA		0.25	0.4		0.25	0.4	V
		V_{CC} = 4.5 V,	I_{OL} = 8 mA					0.35	0.5	
	ZL, Y15-Y0	V_{CC} = 4.5 V,	I_{OL} = 12 mA		0.25	0.4		0.25	0.4	
		V_{CC} = 4.5 V,	I_{OL} = 24 mA					0.35	0.5	
I_I	I/O ports[‡]	V_{CC} = 5.5 V,	V_I = 5.5 V			0.1			0.1	mA
	All others	V_{CC} = 5.5 V,	V_I = 7 V			0.1			0.1	
I_{IH}	I/O ports[‡]	V_{CC} = 5.5 V,	V_I = 2.7 V			40			40	μA
	All others					20			20	
I_{IL}	All inputs	V_{CC} = 5.5 V,	V_I = 0.4 V			−0.4			−0.4	mA
I_O[§]		V_{CC} = 5.5 V,	V_O = 2.25 V	−30		−112	−30		−112	mA
I_{CC1}		V_{CC} = 5.5 V,	See Note 1			100			90	mA
I_{CC2}		V_{CC} = 2.1 V,	See Note 1			520			490	mA

[†] All typical values are at V_{CC} = 5 V, T_A = 25°C.
[‡] For I/O ports, the parameters I_{IH} and I_{IL} include the offstate output current.
[§] The output conditions have been chosen to produce a current that closely approximates one half of the true short-circuit output current, I_{OS}.
NOTE 1: Supply currents I_{CC1} and I_{CC2} are measured with M0, M1, M2, IP, OP, S, ZN3-ZN0, D15-D0, and $\overline{OEY}$ low; $16B/\overline{32B}$, $\overline{NORM}$, and CLK high; and Y15-Y0, ZL, and ZN4 open.

switching characteristics

PARAMETER	FROM (INPUT)	TO (OUTPUT)	V_{CC} = 4.5 V to 5.5 V, C_L = 50 pF, R1 = 500 Ω, R2 = 500 Ω				UNIT
			T_C = −50°C to 125°C		T_A = 0°C to 70°C		
			SN54AS897		SN74AS897		
			MIN	MAX	MIN	MAX	
t_{pd}	D15-D0	Y15-Y0		55		50	ns
	S	Y15-Y0		44		40	
	ZN3-ZN0	Y15-Y0		44		40	
	IP	Y15-Y0		48		45	
	OP	Y15-Y0		48		45	
	M0, M1, M2	Y15-Y0		48		45	
	CLK†	Y15-Y0		63		59	
	D15-D0	ZL		44		40	
	D15-D0‡	ZN4-ZN0		40		36	
t_{en}	M0, M1, M2§	ZN4-ZN0		30		26	ns
	16B/$\overline{32B}$	Y15-Y0		52		46	
	$\overline{\text{NORM}}$‡	ZN3-ZN0		33		29	
	$\overline{\text{OEY}}$	Y15-Y0		38		35	
	ZN4, ZL	Y15-Y0		55		50	
t_{dis}	M0, M1, M2§	ZN4-ZN0		32		29	ns
	16B/$\overline{32B}$	Y15-Y0		58		52	
	$\overline{\text{NORM}}$‡	ZN3-ZN0		14		12	
	$\overline{\text{OEY}}$	Y15-Y0		16		14	
	ZN4, ZL	Y15-Y0		55		50	

† This parameter applies only to the circular mode with S high and OP high.
‡ These parameters apply only to the normalization mode.
§ These parameters apply only to the 32-bit mode (16B/$\overline{32B}$ = L).

SN54ALS994, SN54ALS995, SN74ALS994, SN74ALS995
10-BIT D-TYPE TRANSPARENT READ-BACK LATCHES

D2856, OCTOBER 1984 – REVISED AUGUST 1985

- **3-State I/O-Type Read-Back Inputs**
- **Bus-Structured Pinout**
- **Choice of True or Inverting Logic**
  'ALS994 . . . True Outputs
  'ALS995 . . . Inverting Outputs
- **Package Options Include Both Plastic and Ceramic Chip Carriers in Addition to Plastic and Ceramic DIPs**
- **Dependable Texas Instruments Quality and Reliability**

SN54ALS994 . . . JT PACKAGE
SN74ALS994 . . . DW OR NT PACKAGE
(TOP VIEW)

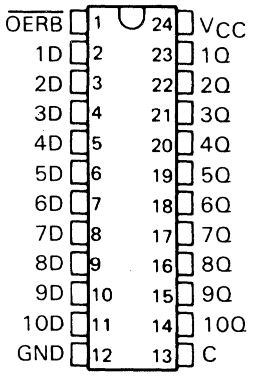
$\overline{\text{OERB}}$
1
24
V_{CC}
1D
2
23
1Q
2D
3
22
2Q
3D
4
21
3Q
4D
5
20
4Q
5D
6
19
5Q
6D
7
18
6Q
7D
8
17
7Q
8D
9
16
8Q
9D
10
15
9Q
10D
11
14
10Q
GND
12
13
C

SN54ALS994 . . . FK PACKAGE
SN74ALS994 . . . FN PACKAGE
(TOP VIEW)

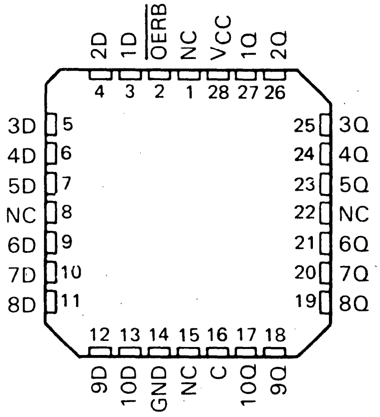
2D
1D
$\overline{\text{OERB}}$
NC
VCC
1Q
2Q
4
3
2
1
28
27
26
3D
5
4D
6
5D
7
NC
8
6D
9
7D
10
8D
11
25
3Q
24
4Q
23
5Q
22
NC
21
6Q
20
7Q
19
8Q
12
13
14
15
16
17
18
9D
10D
GND
NC
C
10Q
9Q

NC No internal connection.

description

These 10-bit latches are designed specifically for storing the contents of the input data bus plus providing the capability of reading-back the stored data onto the input data bus.

The ten latches of the 'ALS994 and 'ALS995 are transparent D-type. While the enable (C) is high, the Q outputs of the 'ALS994 will follow the data (D) inputs. For the 'ALS995, the Q outputs will provide the inverse of what is applied to its data (D) inputs.

Read-back is provided through the read-back control input ($\overline{\text{OERB}}$). When the control is taken low, the data present at the output of the data latches will be allowed to pass back onto the input data bus. When it is taken high, the output of the data latches will be isolated from the data (D) inputs. The read-back control does not affect the internal operation of the latches; however, precautions should be taken not to create a bus-conflict situation.

The SN54ALS994 and SN54ALS995 are characterized for operation over the full military temperature range of −55°C to 125°C. The SN74ALS994 and SN74ALS995 are characterized for operation from 0°C to 70°C.

PRODUCT PREVIEW documents contain information on products in the formative or design phase of development. Characteristic data and other specifications are design goals. Texas Instruments reserves the right to change or discontinue these products without notice.

Copyright © 1984, Texas Instruments Incorporated

TEXAS INSTRUMENTS
POST OFFICE BOX 225012 • DALLAS, TEXAS 75265

PRODUCT PREVIEW

SN54ALS996, SN74ALS996
8-BIT D-TYPE EDGE-TRIGGERED READ-BACK LATCHES

D2854, OCTOBER 1984 – REVISED AUGUST 1985

- **3-State I/O-Type Read-Back Inputs**
- **Bus-Structured Pinout**
- **T/$\overline{\text{C}}$ Determines True or Complementary Data at Q Outputs**
- **Package Options Include Both Plastic and Ceramic Chip Carriers in Addition to Plastic and Ceramic DIPs**
- **Dependable Texas Instruments Quality and Reliability**

SN54ALS996 . . . JT PACKAGE
SN74ALS996 . . . DW OR NT PACKAGE
(TOP VIEW)

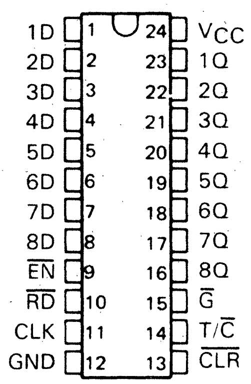
1D 1
2D 2
3D 3
4D 4
5D 5
6D 6
7D 7
8D 8
$\overline{\text{EN}}$ 9
$\overline{\text{RD}}$ 10
CLK 11
GND 12
24 V_{CC}
23 1Q
22 2Q
21 3Q
20 4Q
19 5Q
18 6Q
17 7Q
16 8Q
15 $\overline{\text{G}}$
14 T/$\overline{\text{C}}$
13 $\overline{\text{CLR}}$

SN54ALS996 . . . FK PACKAGE
SN74ALS996 . . . FN PACKAGE
(TOP VIEW)

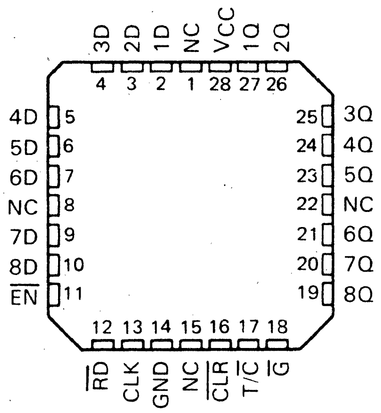
3D 4
2D 3
1D 2
NC 1
VCC 28
1Q 27
2Q 26
4D 5
5D 6
6D 7
NC 8
7D 9
8D 10
$\overline{\text{EN}}$ 11
25 3Q
24 4Q
23 5Q
22 NC
21 6Q
20 7Q
19 8Q
12 $\overline{\text{RD}}$
13 CLK
14 GND
15 NC
16 $\overline{\text{CLR}}$
17 T/$\overline{\text{C}}$
18 $\overline{\text{G}}$

NC – No internal connection.

description

These 8-bit registers are designed specifically for storing the contents of the input data bus plus providing the capability of reading-back the stored data onto that bus. The Q outputs are designed with bus-driving capability.

The edge-triggered flip-flops enter the data on the low-to-high transition of the clock (CLK) when enable ($\overline{\text{EN}}$) is low. Data can be read-back onto the data inputs by taking the read input ($\overline{\text{RD}}$) low, in addition to having $\overline{\text{EN}}$ low. Whenever $\overline{\text{EN}}$ is high, both the read-back and write modes are disabled. Transitions on $\overline{\text{EN}}$ should only be made with CLK high in order to prevent false clocking.

The polarity of the Q outputs can be controlled by the polarity input T/$\overline{\text{C}}$. When T/$\overline{\text{C}}$ is high, Q will be the same as is stored in the flip-flops. When T/$\overline{\text{C}}$ is low, the output data will be inverted. The Q outputs can be placed in a high-impedance state by taking the output control ($\overline{\text{G}}$) high. The output control $\overline{\text{G}}$ does not affect the internal operations of the register. Old data can be retained or new data can be entered while the outputs are off.

A low level at the clear input ($\overline{\text{CLR}}$) resets the internal registers low. The clear function is asynchronous and overrides all other register functions.

The SN54ALS996 is characterized for operation over the full military temperature range of −55°C to 125°C. The SN74ALS996 is characterized for operation from 0°C to 70°C.

PRODUCT PREVIEW documents contain information on products in the formative or design phase of development. Characteristic data and other specifications are design goals. Texas Instruments reserves the right to change or discontinue these products without notice.

Copyright © 1984, Texas Instruments Incorporated

TEXAS INSTRUMENTS
POST OFFICE BOX 225012 • DALLAS, TEXAS 75265

PRODUCT PREVIEW

SN54ALS2967, SN74ALS2967, SN54ALS2968, SN74ALS2968 DYNAMIC MEMORY CONTROLLERS

D2900, NOVEMBER 1985

- **Provides Control for 16K, 64K, and 256K Dynamic RAMs**
- **Highest-Order Two-Address Bits Select One of Four Banks of RAMs**
- **Supports Scrubbing Operations and Nibble-Mode Access**
- **Separate Output Enable for Multi-Channel Access to Memory**
- **48-Pin Dual-In-Line Package**
- **'ALS2968 is Designed to be Interchangeable with AMD AM2968**

SN54ALS2967, SN54ALS2968 . . . JD PACKAGE
SN74ALS2967, SN74ALS2968 . . . JD OR N PACKAGE
(TOP VIEW)

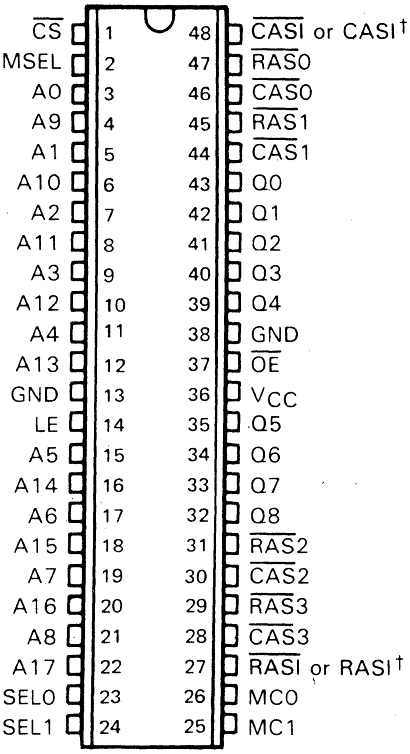

$\overline{\text{CS}}$ 1
MSEL 2
A0 3
A9 4
A1 5
A10 6
A2 7
A11 8
A3 9
A12 10
A4 11
A13 12
GND 13
LE 14
A5 15
A14 16
A6 17
A15 18
A7 19
A16 20
A8 21
A17 22
SEL0 23
SEL1 24
25 MC1
26 MC0
27 $\overline{\text{RASI}}$ or RASI†
28 $\overline{\text{CAS3}}$
29 $\overline{\text{RAS3}}$
30 $\overline{\text{CAS2}}$
31 $\overline{\text{RAS2}}$
32 Q8
33 Q7
34 Q6
35 Q5
36 V_{CC}
37 $\overline{\text{OE}}$
38 GND
39 Q4
40 Q3
41 Q2
42 Q1
43 Q0
44 $\overline{\text{CAS1}}$
45 $\overline{\text{RAS1}}$
46 $\overline{\text{CAS0}}$
47 $\overline{\text{RAS0}}$
48 $\overline{\text{CASI}}$ or CASI†

† 'ALS2967 has active-low inputs $\overline{\text{CASI}}$ and $\overline{\text{RASI}}$; 'ALS2968 has active-high inputs CASI and RASI.

description

The 'ALS2967 and 'ALS2968 dynamic memory controllers (DMCs) are designed for use in today's high-performance memory systems. The DMC acts as the address controller between any processor and dynamic memory array.

Two versions are provided that help simplify interfacing to the system dynamic timing controller. The 'ALS2967 offers active-low Row Address Strobe Input ($\overline{\text{RASI}}$) and Column Address Strobe Input ($\overline{\text{CASI}}$), while the 'ALS2968 offers active-high Row Address Strobe Input (RASI) and Column Address Strobe Input (CASI) inputs.

Using two 9-bit address latches, the DMC will hold the row and column addresses for any DRAM up to 256K. These latches and the two row/column refresh address counters feed into a 9-bit, 4-input MUX for output to the dynamic RAM address lines. A 2-bit bank select latch is provided to select one of the four $\overline{\text{RAS}}$ and $\overline{\text{CAS}}$ outputs. The two bits are normally obtained from the two highest-order address bits.

The 'ALS2967 and 'ALS2968 have two basic modes of operation, read/write and refresh. During normal read/write operations, the row and column addresses are multiplexed to the dynamic RAM, with the corresponding $\overline{\text{RAS}}$ and $\overline{\text{CAS}}$ signals activated to strobe the addresses into the RAM. In the refresh mode, the two counters cycle through the refresh addresses. If memory scrubbing is not being implemented, only the row counter is used. When memory scrubbing is being performed, both the row and column counters are used to perform read-modify-write cycles. In this mode all $\overline{\text{RAS}}$ outputs will be active (low) while only one $\overline{\text{CAS}}$ output is active at a time.

The SN54ALS2967 and SN54ALS2968 are characterized for operation over the full military temperature range of −55°C to 125°C. The SN74ALS2967 and SN74ALS2968 are characterized for operation from 0°C to 70°C.

PRODUCT PREVIEW documents contain information on products in the formative or design phase of development. Characteristic data and other specifications are design goals. Texas Instruments reserves the right to change or discontinue these products without notice.

Copyright © 1985, Texas Instruments Incorporated

TEXAS INSTRUMENTS
POST OFFICE BOX 225012 • DALLAS, TEXAS 75265

logic diagram (positive logic)

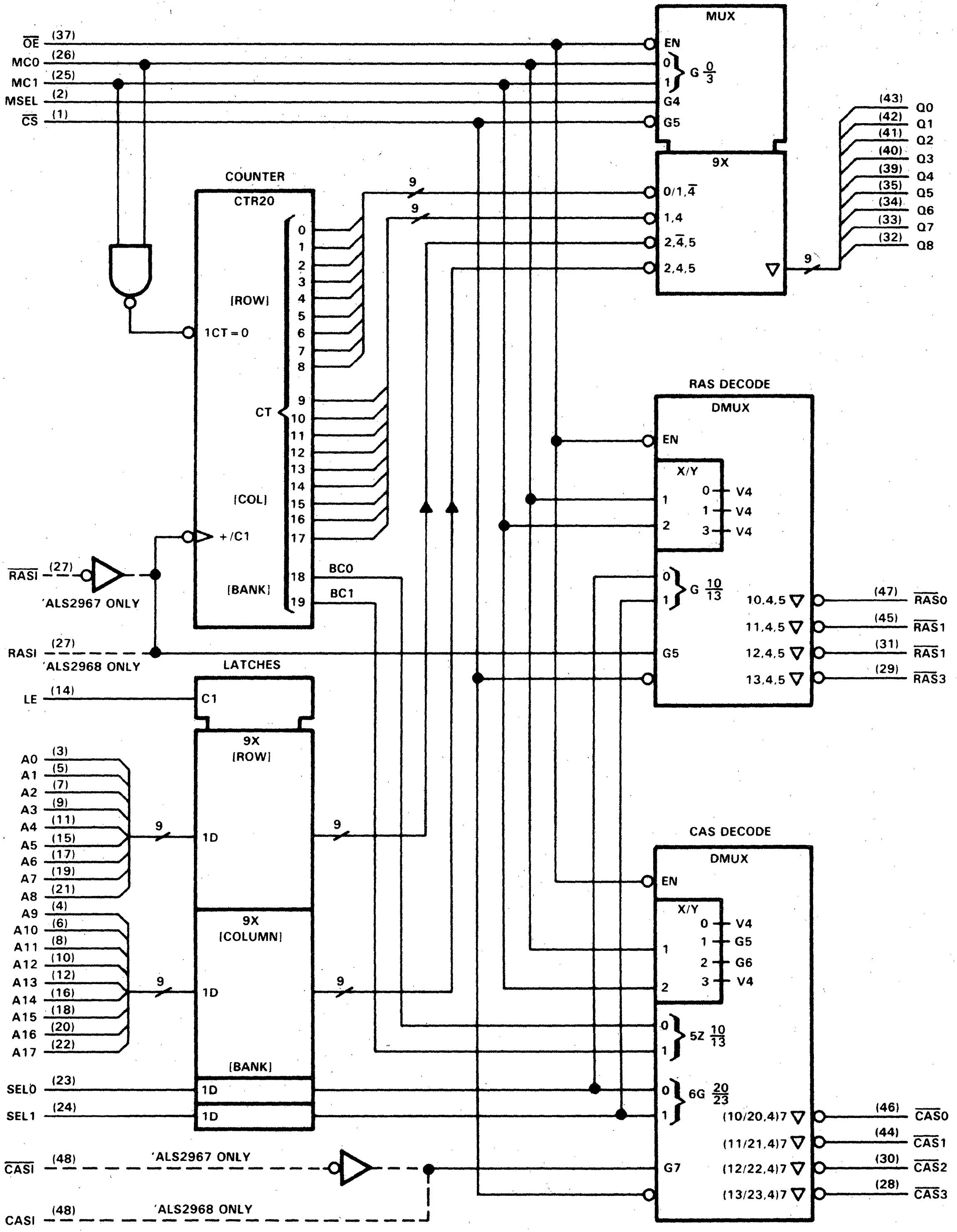
OE (37)
MC0 (26)
MC1 (25)
MSEL (2)
CS (1)
MUX
EN
0
1
G $\frac{0}{3}$
G4
G5
9X
0/1,$\overline{4}$
1,4
2,$\overline{4}$,5
2,4,5
9
Q0 (43)
Q1 (42)
Q2 (41)
Q3 (40)
Q4 (39)
Q5 (35)
Q6 (34)
Q7 (33)
Q8 (32)
COUNTER
CTR20
(ROW)
1CT = 0
CT
0 1 2 3 4 5 6 7 8 9 10 11 12 13 14 15 16 17 18 19
(COL)
+/C1
(BANK)
BC0
BC1
RASI (27)
'ALS2967 ONLY
RASI (27)
'ALS2968 ONLY
RAS DECODE
DMUX
EN
X/Y
0 V4
1 V4
3 V4
1
2
0
1
G $\frac{10}{13}$
G5
10,4,5
11,4,5
12,4,5
13,4,5
(47) RAS0
(45) RAS1
(31) RAS1
(29) RAS3
LATCHES
LE (14)
C1
9X
(ROW)
1D
A0 (3)
A1 (5)
A2 (7)
A3 (9)
A4 (11)
A5 (15)
A6 (17)
A7 (19)
A8 (21)
A9 (4)
A10 (6)
A11 (8)
A12 (10)
A13 (12)
A14 (16)
A15 (18)
A16 (20)
A17 (22)
9X
(COLUMN)
1D
(BANK)
SEL0 (23)
SEL1 (24)
1D
1D
CASI (48)
'ALS2967 ONLY
CASI (48)
'ALS2968 ONLY
CAS DECODE
DMUX
EN
X/Y
0 V4
1 G5
2 G6
3 V4
1
2
0
1
5Z $\frac{10}{13}$
0
1
6G $\frac{20}{23}$
G7
(10/20,4)7
(11/21,4)7
(12/22,4)7
(13/23,4)7
(46) CAS0
(44) CAS1
(30) CAS2
(28) CAS3

logic symbols†

'ALS2967

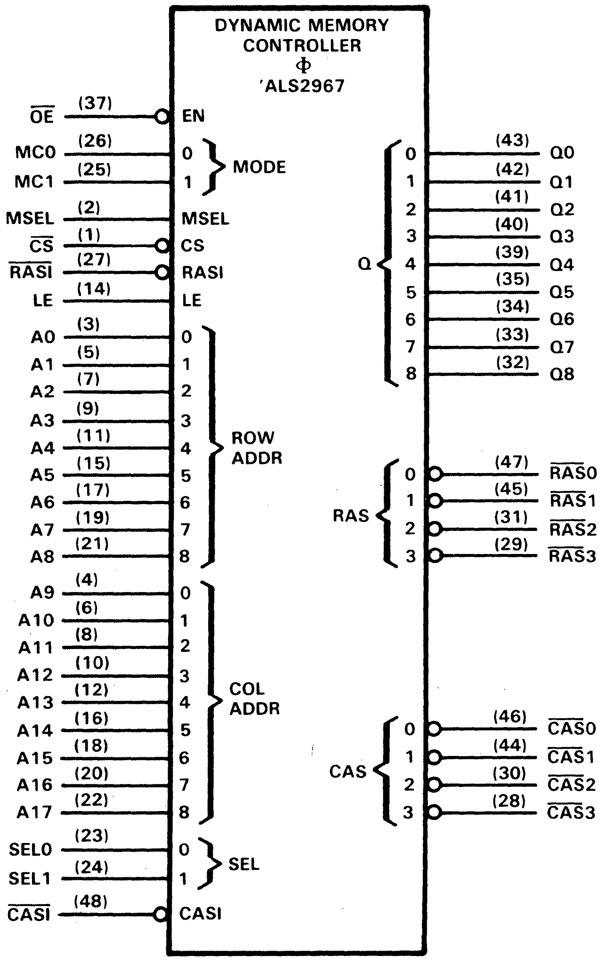
DYNAMIC MEMORY CONTROLLER
Φ
'ALS2967
$\overline{OE}$ (37) EN
MC0 (26) 0
MC1 (25) 1
MODE
MSEL (2) MSEL
$\overline{CS}$ (1) CS
$\overline{RASI}$ (27) RASI
LE (14) LE
A0 (3) 0
A1 (5) 1
A2 (7) 2
A3 (9) 3
A4 (11) 4
A5 (15) 5
A6 (17) 6
A7 (19) 7
A8 (21) 8
ROW ADDR
A9 (4) 0
A10 (6) 1
A11 (8) 2
A12 (10) 3
A13 (12) 4
A14 (16) 5
A15 (18) 6
A16 (20) 7
A17 (22) 8
COL ADDR
SEL0 (23) 0
SEL1 (24) 1
SEL
$\overline{CASI}$ (48) CASI
Q
0 (43) Q0
1 (42) Q1
2 (41) Q2
3 (40) Q3
4 (39) Q4
5 (35) Q5
6 (34) Q6
7 (33) Q7
8 (32) Q8
RAS
0 (47) $\overline{RAS0}$
1 (45) $\overline{RAS1}$
2 (31) $\overline{RAS2}$
3 (29) $\overline{RAS3}$
CAS
0 (46) $\overline{CAS0}$
1 (44) $\overline{CAS1}$
2 (30) $\overline{CAS2}$
3 (28) $\overline{CAS3}$

'ALS2968

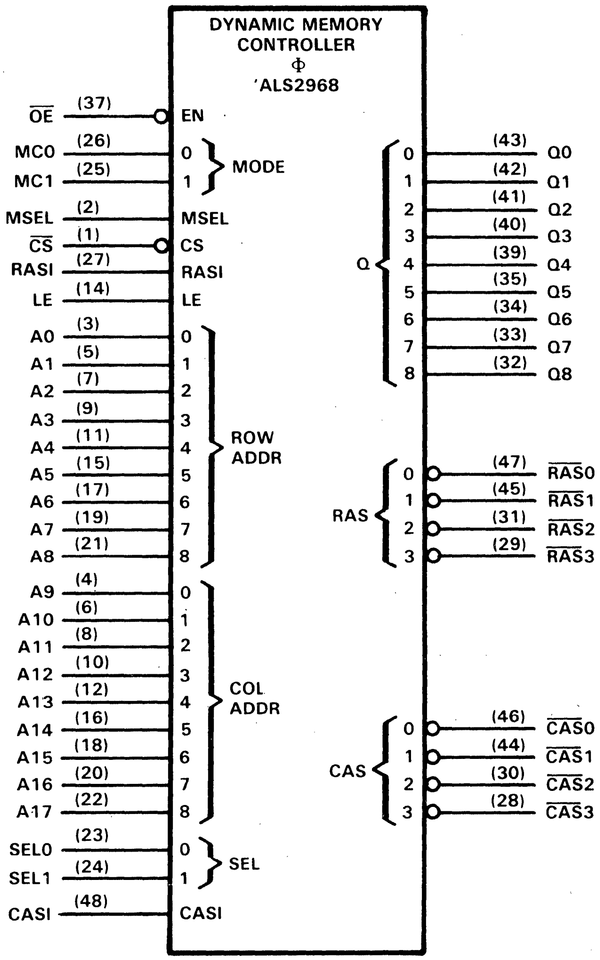
DYNAMIC MEMORY CONTROLLER
Φ
'ALS2968
$\overline{OE}$ (37) EN
MC0 (26) 0
MC1 (25) 1
MODE
MSEL (2) MSEL
$\overline{CS}$ (1) CS
RASI (27) RASI
LE (14) LE
A0 (3) 0
A1 (5) 1
A2 (7) 2
A3 (9) 3
A4 (11) 4
A5 (15) 5
A6 (17) 6
A7 (19) 7
A8 (21) 8
ROW ADDR
A9 (4) 0
A10 (6) 1
A11 (8) 2
A12 (10) 3
A13 (12) 4
A14 (16) 5
A15 (18) 6
A16 (20) 7
A17 (22) 8
COL ADDR
SEL0 (23) 0
SEL1 (24) 1
SEL
CASI (48) CASI
Q
0 (43) Q0
1 (42) Q1
2 (41) Q2
3 (40) Q3
4 (39) Q4
5 (35) Q5
6 (34) Q6
7 (33) Q7
8 (32) Q8
RAS
0 (47) $\overline{RAS0}$
1 (45) $\overline{RAS1}$
2 (31) $\overline{RAS2}$
3 (29) $\overline{RAS3}$
CAS
0 (46) $\overline{CAS0}$
1 (44) $\overline{CAS1}$
2 (30) $\overline{CAS2}$
3 (28) $\overline{CAS3}$

† These symbols are in accordance with ANSI/IEEE Std-91-1984 and IEC Publication 617-12.

TABLE 1. PIN FUNCTION

PIN NAME	DESCRIPTION
A0-A17	Address Inputs. A0-A8 are latched in as the nine-bit row address for the DRAM. These inputs drive Q0-Q8 when the DMC is in the read/write mode and MSEL is low. A9-A17 are latched in as the column address, and will drive Q0-Q8 when MSEL is high and the DMC is in the read/write mode. The addresses are latched when the Latch Enable (LE) input signal is low.
SEL0, SEL1	Bank Select. These two inputs are normally the two highest-order address bits and are used in the read/write mode to select which bank of memory will be receiving the $\overline{\text{RAS}}$ and $\overline{\text{CAS}}$ signals after $\overline{\text{RASI}}$ ('ALS2967) or RASI ('ALS2968) and $\overline{\text{CASI}}$ ('ALS2967) or CASI ('ALS2968) go active.
LE	Latch Enable. This active-high input causes the row, column, and bank select latches to become transparent, allowing the latches to accept new input data. A low input on LE latches the input data.
MSEL	Multiplexer Select. This input determines whether the row or column address will be sent to the memory address inputs. When MSEL is high, the column address is selected, while the row address is selected when MSEL is low. The address may come from either the address latch or refresh address counter depending on MC0 and MC1 (see Mode Control Function Table).
$\overline{\text{CS}}$	Chip Select. This active-low input is used to enable the DMC. When $\overline{\text{CS}}$ is active, the DMC operates normally in all four modes. When $\overline{\text{CS}}$ goes high, the device will not enter the read/write mode. This allows other devices to access the same memory that the DMC is controlling.
$\overline{\text{OE}}$	Output Enable. This active-low input enables/disables the output signals. When $\overline{\text{OE}}$ is high, the outputs of the DMC enter the high-impedance state.
MC0-MC1	Mode Controls. These inputs determine in which of the four modes the DMC operates. The description of each of the four operating modes is given in Table 2.
Q0-Q8	Address Outputs. These address outputs feed the DRAM address inputs and provide drive for memory systems having capacitance of up to 500 picofarads.
$\overline{\text{RASI}}$ or RASI	Row Address Strobe Input. During the normal memory cycles, the decoded $\overline{\text{RAS}}$n output ($\overline{\text{RAS0}}$, $\overline{\text{RAS1}}$, $\overline{\text{RAS2}}$, or $\overline{\text{RAS3}}$) is forced low after receipt of an active Row Address Strobe Input signal. In either Refresh mode, all four $\overline{\text{RAS}}$ outputs will be low while the Row Address Strobe Input signal is active. The $\overline{\text{RASI}}$ on the 'ALS2967 is an active-low input while on the 'ALS2968, RASI is an active-high input. (For more details see timing diagrams).
$\overline{\text{RAS0}}$-$\overline{\text{RAS3}}$	Row Address Strobe. Each of the Row Address Strobe outputs provides a $\overline{\text{RAS}}$ signal to one of the four banks of dynamic memory. Each $\overline{\text{RAS}}$n output will go low when selected by SEL0 and SEL1 after $\overline{\text{RASI}}$ ('ALS2967) or RASI ('ALS2968) goes active. All four go low in response to $\overline{\text{RASI}}$ ('ALS2967) or RASI ('ALS2968) while in the refresh mode.
$\overline{\text{CASI}}$ or CASI	Column Address Strobe Input. This input going active causes the selected $\overline{\text{CAS}}$ output to be forced low. The $\overline{\text{CASI}}$ input on the 'ALS2967 is active low input while on the 'ALS2968, CASI is active high input. (For more details see timing diagrams.)
$\overline{\text{CAS0}}$-$\overline{\text{CAS3}}$	Column Address Strobe. During normal Read/Write cycles the two selected bits (SEL0, SEL1) determine which $\overline{\text{CAS}}$ output will go active following $\overline{\text{CASI}}$ ('ALS2967) or CASI ('ALS2968) going active. When memory scrubbing is being performed, only the $\overline{\text{CAS}}$n signal selected will be active. For non-scrubbing cycles, all four $\overline{\text{CAS}}$ outputs will remain high.

TABLE 2. MODE-CONTROL FUNCTION TABLE

MC1	MC0	OPERATING MODE
L	L	Refresh Mode without Scrubbing. Refresh cycles are performed with only the row counter being used to generate the addresses. In this mode, all four $\overline{RAS}$ outputs are active while the four $\overline{CAS}$ outputs remain high.
L	H	Refresh with Scrubbing/Initialize. During this mode, refresh cycles are done with both the row and column counters generating the addresses. MSEL is used to select either the row or the column counter. All four $\overline{RAS}$ outputs go low in response to $\overline{RASI}$ ('ALS2967) or RASI ('ALS2968), while only one $\overline{CAS}$n output goes low in response to $\overline{CASI}$ ('ALS2967) or CASI ('ALS2968). The bank counter keeps track of which $\overline{CAS}$ output goes active. This mode can also be used during system power-up so that the memory can be written with a known data pattern.
H	L	Read/Write. This mode is used to perform read/write cycles. Both the Row and Column addresses are multiplexed to the address output lines using MSEL. SEL0 and SEL1 are decoded to determine which $\overline{RAS}$n and $\overline{CAS}$n outputs will be active.
H	H	Clear Refresh Counters. This mode clears the three refresh counters (row, column, and bank) on the inactive transition of $\overline{RASI}$ ('ALS2967) or RASI ('ALS2968), putting them at start of the refresh sequence (see timing diagrams for more detail). In this mode, all four RAS outputs are driven low after the active edge of $\overline{RASI}$ ('ALS2967) or RASI ('ALS2968) so that DRAM wake-up cycles may also be performed.

TABLE 3. ADDRESS OUTPUT FUNCTIONS

MODE	INPUTS				OUTPUTS Q0-Q8
	MC1	MC0	MSEL	$\overline{\mathrm{CS}}$	
Refresh without scrubbing	L	L	X	X	Row counter address
Refresh with scrubbing	L	H	L	X	Row counter address
			H	X	Column counter address
Read/write	H	L	L	L	Row address[†]
			H	L	Column address[†]
			X	H	All L
Clear refresh counter[‡]	H	H	X	X	All L

TABLE 4. RAS OUTPUT FUNCTIONS

INPUTS							OUTPUTS			
'ALS2967 $\overline{\mathrm{RASI}}$	'ALS2968 RASI	MC1	MC0	SEL1[†]	SEL0[†]	$\overline{\mathrm{CS}}$	$\overline{\mathrm{RAS0}}$	$\overline{\mathrm{RAS1}}$	$\overline{\mathrm{RAS2}}$	$\overline{\mathrm{RAS3}}$
L	H	L	L	X	X	X	L	L	L	L
L	H	L	H	X	X	X	L	L	L	L
L	H	H	L	L	L	L	L	H	H	H
				L	H	L	H	L	H	H
				H	L	L	H	H	L	H
				H	H	L	H	H	H	L
				X	X	H	H	H	H	H
L	H	H	H	X	X	X	L	L	L	L
H	L	X	X	X	X	X	H	H	H	H

TABLE 5. CAS OUTPUT FUNCTIONS

INPUTS									OUTPUTS			
'ALS2967 $\overline{\mathrm{CASI}}$	'ALS2968 CASI	MC1	MC0	SEL1[†]	SEL0[†]	INTERNAL		$\overline{\mathrm{CS}}$	$\overline{\mathrm{CAS0}}$	$\overline{\mathrm{CAS1}}$	$\overline{\mathrm{CAS2}}$	$\overline{\mathrm{CAS3}}$
						BC1	BC0					
L	H	L	L	X	X	X	X	X	H	H	H	H
L	H	L	H	X	X	L	L	X	L	H	H	H
						L	H	X	H	L	H	H
						H	L	X	H	H	L	H
						H	H	X	H	H	H	L
L	H	H	L	L	L	X	X	L	L	H	H	H
				L	H	X	X	L	H	L	H	H
				H	L	X	X	L	H	H	L	H
				H	H	X	X	L	H	H	H	L
				X	X	X	X	H	H	H	H	H
L	H	H	H	X	X	X	X	X	H	H	H	H
H	L	X	X	X	X	X	X	X	H	H	H	H

[†] If LE is low, outputs will be the levels entered when LE was last high. If LE is high, outputs will follow address inputs as selected by MSEL.
[‡] For 'ALS2967, clearing occurs on the low-to-high transition of $\overline{\mathrm{RASI}}$; for 'ALS2968, clearing occurs on the high-to-low transition of RASI.

read/write operation details

During normal read/write operations, the row and column addresses are multiplexed to the dynamic RAM controlled by the MSEL input. The corresponding $\overline{\text{RAS}}$n and $\overline{\text{CAS}}$n output signals strobe the addresses into memory. The block diagram in Figure 1 shows a typical system interface for a one-megaword dynamic memory. The DMC is used to control the four banks of 256K memory.

For systems where addresses and data are multiplexed onto a single bus, the DMC uses latches, (row, column, and bank) to hold the address information. Figure 5 shows a typical timing diagram using the input latches. The twenty input latches are transparent when latch enable (LE) is high, and latch the input data whenever LE is taken low. For systems in which the processor has separate address and data buses, LE may be permanently high (see timing diagram in Figure 4).

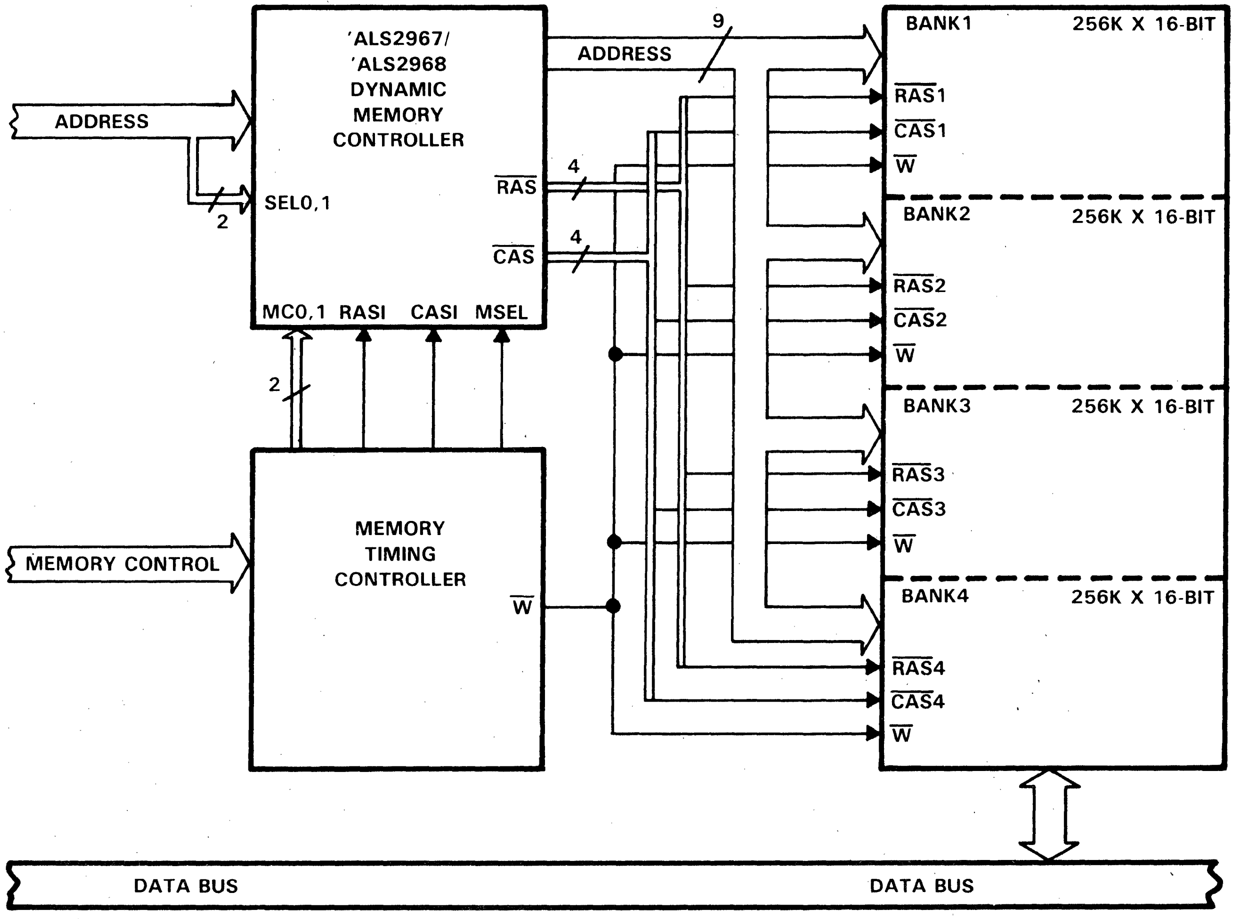
'ALS2967/
'ALS2968
DYNAMIC
MEMORY
CONTROLLER
ADDRESS
SEL0,1
2
RAS
CAS
4
4
MC0,1 RASI CASI MSEL
2
ADDRESS
9
MEMORY CONTROL
MEMORY
TIMING
CONTROLLER
W
BANK1 256K X 16-BIT
RAS1
CAS1
W
BANK2 256K X 16-BIT
RAS2
CAS2
W
BANK3 256K X 16-BIT
RAS3
CAS3
W
BANK4 256K X 16-BIT
RAS4
CAS4
W
DATA BUS
DATA BUS

FIGURE 1. 1-MEGAWORD X 16-BIT DYNAMIC MEMORY

read/write operations (continued)

The DMC is designed with heavy-duty outputs that are capable of driving four banks of 16-bit words, including six checkbits used for error detection and correction.

In addition to heavy-duty output drivers, the outputs are designed with balanced output impedances (25 Ω both high and low). This feature optimizes the drive low characteristics, based on safe undershoot, while providing symmetrical drive high characteristics. It also eliminates the external resistors required to pull the outputs up to the MOS V_{OH} level (V_{CC} − 1.5 V).

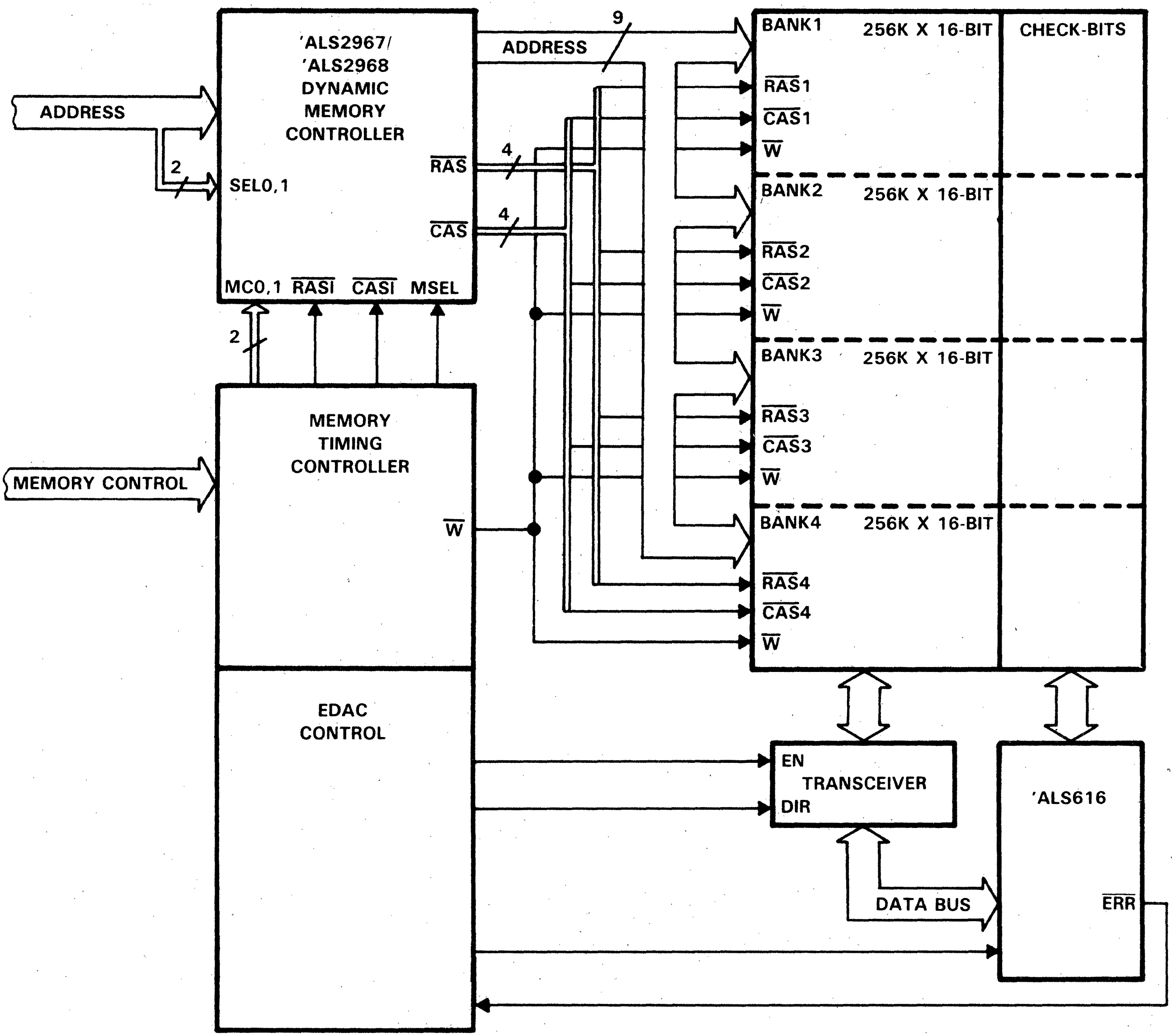
'ALS2967/
'ALS2968
DYNAMIC
MEMORY
CONTROLLER
ADDRESS
2
SEL0,1
RAS
CAS
4
4
9
ADDRESS
MC0,1 RASI CASI MSEL
2
MEMORY
TIMING
CONTROLLER
MEMORY CONTROL
W
EDAC
CONTROL
BANK1
256K X 16-BIT
CHECK-BITS
RAS1
CAS1
W
BANK2
256K X 16-BIT
RAS2
CAS2
W
BANK3
256K X 16-BIT
RAS3
CAS3
W
BANK4
256K X 16-BIT
RAS4
CAS4
W
EN
TRANSCEIVER
DIR
'ALS616
ERR
DATA BUS

FIGURE 2. 1-MEGAWORD X 16-BIT DYNAMIC MEMORY WITH ERROR DETECTION AND CORRECTION

memory expansion

With a 9-bit address path, the DMC can control up to one megaword when using 256K dynamic RAMs. If a larger memory size is desired, the DMC's chip select ($\overline{CS}$) makes it easy to expand the memory size by using additional DMCs. A four-megaword memory system is shown in Figure 3.

To maintain maximum performance in 32-bit applications, it is recommended that individual bus drivers be used for each bank.

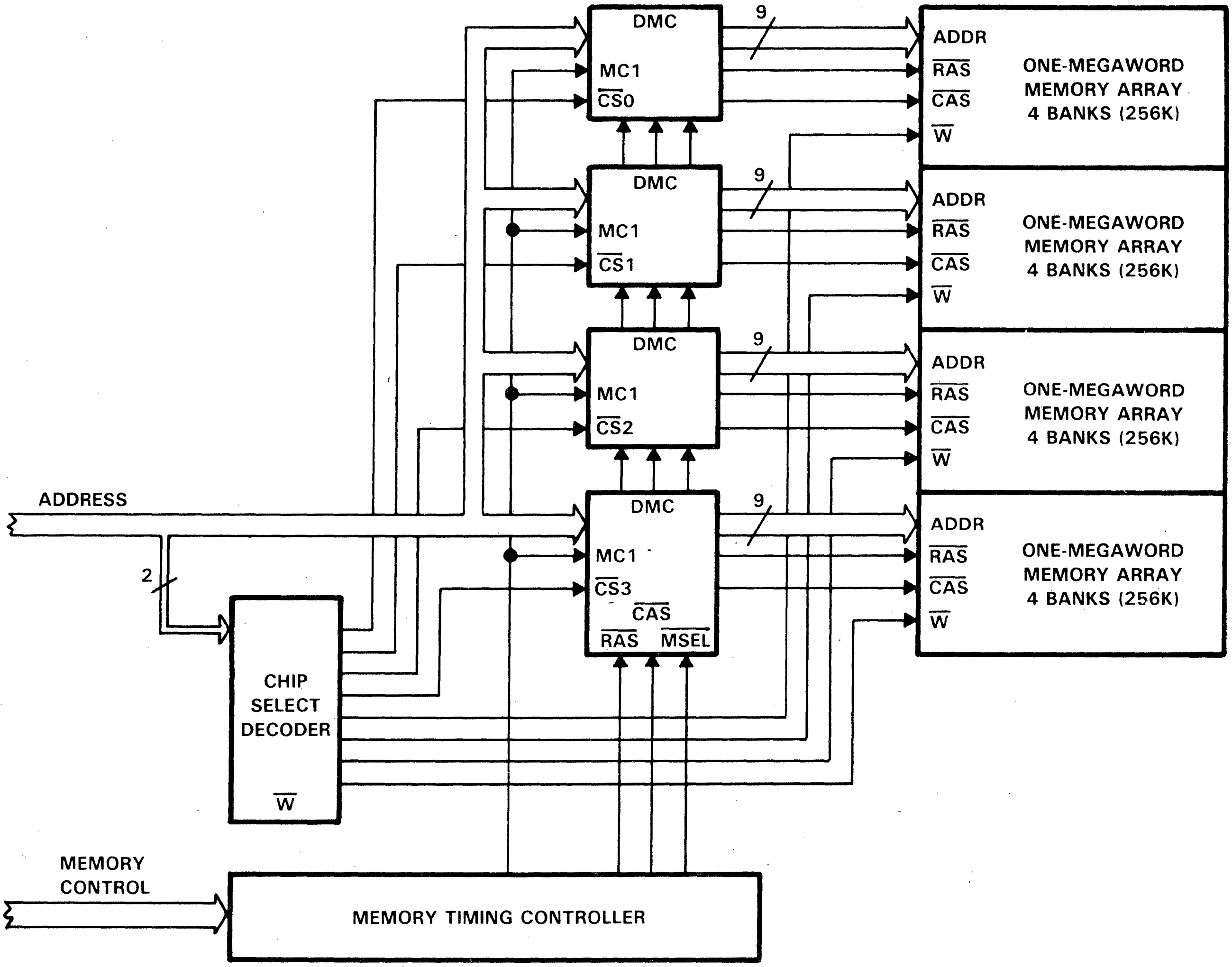
DMC
MC1
CS0
9
ADDR
RAS
CAS
W
ONE-MEGAWORD MEMORY ARRAY 4 BANKS (256K)
DMC
MC1
CS1
9
ADDR
RAS
CAS
W
ONE-MEGAWORD MEMORY ARRAY 4 BANKS (256K)
DMC
MC1
CS2
9
ADDR
RAS
CAS
W
ONE-MEGAWORD MEMORY ARRAY 4 BANKS (256K)
ADDRESS
DMC
MC1
CS3
CAS
RAS
MSEL
9
ADDR
RAS
CAS
W
ONE-MEGAWORD MEMORY ARRAY 4 BANKS (256K)
2
CHIP SELECT DECODER
W
MEMORY CONTROL
MEMORY TIMING CONTROLLER

FIGURE 3. 4-MEGAWORD X 16-BIT DYNAMIC MEMORY

refresh operations

The two 9-bit counters in the 'ALS2967 and 'ALS2968 support 128-, 256-, and 512-line refresh operations. Transparent, burst, synchronous, or asynchronous refresh modes are all possible. The refresh counters are advanced on the low-to-high transition of $\overline{\text{RASI}}$ on the 'ALS2967, and on the high-to-low transition of RASI on the 'ALS2968. The refresh counters are reset to zero on the low-to-high transition of $\overline{\text{RASI}}$ on the 'ALS2967, and on the high-to-low transition of RASI on the 'ALS2968, if MC1 and MC0 are at a low logic level. See Figure 8 for additional timing details.

When performing refresh cycles without memory scrubbing (MC1 and MC0 both low), all four $\overline{\text{RAS}}$ outputs go low, while all $\overline{\text{CAS}}$ outputs are driven high. Typical timing for this mode of operation is shown in Figure 6.

absolute maximum ratings over operating free-air temperature range (unless otherwise noted)

Supply voltage, V_{CC} . . . . 7 V
Input voltage . . . . 7 V
Voltage applied to disabled 3-state output . . . . 5.5 V
Operating free-air temperature range: SN54ALS2967, SN54ALS2968 . . . . −55°C to 125°C
SN74ALS2967, SN74ALS2968 . . . . 0°C to 70°C
Storage temperature range . . . . −65°C to 150°C

recommended operating conditions

			SN54ALS2967 SN54ALS2968			SN74ALS2967 SN74ALS2968			UNIT
			MIN	NOM	MAX	MIN	NOM	MAX	
V_{CC}	Supply voltage		4.5	5	5.5	4.5	5	5.5	V
V_{IH}	High-level input voltage		2			2			V
V_{IL}	Low-level input voltage				0.8			0.8	V
I_{OH}	High-level output current				−1			−2.6	mA
I_{OL}	Low-level output current				12			12	mA
t_w	Pulse duration	(23) $\overline{\text{RASI}}$ low or RASI high							ns
		(24) $\overline{\text{RASI}}$ high or RASI low							
		(25) LE high							
t_{su}	Setup time	(26) An before LE low							ns
		(27) SELn before LE low							
		(28) $\overline{\text{CS}}$ low before $\overline{\text{RASI}}$ low or RASI high							
		(29) SELn before $\overline{\text{RASI}}$ low or RASI high							
t_h	Hold time	(30) An after LE low							ns
		(31) SELn after LE low							
T_A	Operating free-air temperature		−55		125	0		70	°C

electrical characteristics over recommended operating free-air temperature range (unless otherwise noted)

PARAMETER	TEST CONDITIONS		SN54ALS2967 SN54ALS2968			SN74ALS2967 SN74ALS2968			UNIT
			MIN	TYP†	MAX	MIN	TYP†	MAX	
V_{IK}	V_{CC} = 4.5 V,	I_I = −18 mA			−1.5			−1.5	V
V_{OH}	V_{CC} = 4.5 V,	I_{OH} = −1 mA	2.4	3.3					V
	V_{CC} = 4.5 V,	I_{OH} = −2.6 mA				2.4	3.2		
V_{OL}	V_{CC} = 4.5 V,	I_{OL} = 1 mA		0.15	0.5		0.15	0.5	V
	V_{CC} = 4.5 V,	I_{OL} = 12 mA		0.35	0.8		0.35	0.8	
I_{OL}§	V_{CC} = 4.5 V,	V_O = 2 V	30			30			mA
I_{OZH}	V_{CC} = 5.5 V,	V_O = 2.7 V			20			20	μA
I_{OZL}	V_{CC} = 5.5 V,	V_O = 0.4 V			−20			−20	μA
I_I	V_{CC} = 5.5 V,	V_I = 7 V			0.1			0.1	mA
I_{IH}	V_{CC} = 5.5 V,	V_I = 2.7 V			20			20	μA
I_{IL}	V_{CC} = 5.5 V,	V_I = 0.4 V			−0.1			−0.1	mA
I_O‡	V_{CC} = 5.5 V,	V_O = 2.25 V	−30		−112	−30		−112	mA
I_{CC}	V_{CC} = 5.5 V,	See Note 1							mA

† All typical values are at V_{CC} = 5 V, T_A = 25°C.
‡ The output conditions have been chosen to produce a current that closely approximates one half the true short-circuit output current, I_{OS}.
§ Not more than one output should be tested at a time, and duration should not exceed 1 second.
NOTE 1: (Note 1 will be defined from characterization data) ◀—

'ALS2967 switching characteristics (see Note 2)

PARAMETER	FROM (INPUT)	TO (OUTPUT)	TEST CONDITIONS	SN54ALS2967			SN74ALS2967			UNIT
				MIN	TYP	MAX	MIN	TYP	MAX	
$t_{pd(1)}$	$\overline{\text{RASI}}$	Any Q	V_{CC} = 4.5 V to 5.5 V, C_L = 50 pF R1 = 500 Ω R2 = 500 Ω T_A = MIN to MAX							ns
$t_{pd(2)}$	$\overline{\text{RASI}}$	$\overline{\text{RAS}}$n								ns
$t_{pd(3)}$	$\overline{\text{CASI}}$	$\overline{\text{CAS}}$n								ns
$t_{pd(4)}$	Any A	Any Q								ns
$t_{pd(5)}$	MSEL	Any Q								ns
$t_{pd(6)}$	LE↑	Any Q								ns
$t_{pd(7)}$	LE↑	Any $\overline{\text{RAS}}$								ns
$t_{pd(8)}$	LE↑	Any $\overline{\text{CAS}}$								ns
$t_{pd(9)}$	MC0 or MC1	Any Q								ns
$t_{pd(10)}$	MC0 or MC1	Any $\overline{\text{RAS}}$								ns
$t_{pd(11)}$	MC0 or MC1	Any $\overline{\text{CAS}}$								ns
$t_{pd(12)}$	$\overline{\text{CS}}$↑	Any Q								ns
$t_{pd(13)}$	$\overline{\text{CS}}$↑	Any $\overline{\text{RAS}}$								ns
$t_{pd(14)}$	$\overline{\text{CS}}$↑	Any $\overline{\text{CAS}}$								ns
$t_{pd(15)}$	SEL0 or SEL1	Any $\overline{\text{RAS}}$								ns
$t_{pd(16)}$	SEL0 or SEL1	Any $\overline{\text{CAS}}$								ns
$t_{en(17)}$	$\overline{\text{OE}}$↓	Any Q								ns
$t_{en(18)}$	$\overline{\text{OE}}$↓	Any $\overline{\text{RAS}}$								ns
$t_{en(19)}$	$\overline{\text{OE}}$↓	Any $\overline{\text{CAS}}$								ns
$t_{dis(20)}$	$\overline{\text{OE}}$↑	Any Q								ns
$t_{dis(21)}$	$\overline{\text{OE}}$↑	Any $\overline{\text{RAS}}$								ns
$t_{dis(22)}$	$\overline{\text{OE}}$↑	Any $\overline{\text{CAS}}$								ns

NOTE 2: Load circuit and voltage waveforms are shown in Section 1.

'ALS2968 switching characteristics (see Note 2)

PARAMETER	FROM (INPUT)	TO (OUTPUT)	TEST CONDITIONS	SN54ALS2968			SN74ALS2968			UNIT
				MIN	TYP	MAX	MIN	TYP	MAX	
$t_{pd(1)}$	$\overline{\text{RASI}}$	Any Q	V_{CC} = 4.5 V to 5.5 V, C_L = 500 pF R1 = 500 Ω R2 = 500 Ω T_A = MIN to MAX							ns
$t_{pd(2)}$	$\overline{\text{RASI}}$	$\overline{\text{RAS}}$n								ns
$t_{pd(3)}$	$\overline{\text{CASI}}$	$\overline{\text{CAS}}$n								ns
$t_{pd(4)}$	Any A	Any Q								ns
$t_{pd(5)}$	MSEL	Any Q								ns
$t_{pd(6)}$	LE↑	Any Q								ns
$t_{pd(7)}$	LE↑	Any $\overline{\text{RAS}}$								ns
$t_{pd(8)}$	LE↑	Any $\overline{\text{CAS}}$								ns
$t_{pd(9)}$	MC0 or MC1	Any Q								ns
$t_{pd(10)}$	MC0 or MC1	Any $\overline{\text{RAS}}$								ns
$t_{pd(11)}$	MC0 or MC1	Any $\overline{\text{CAS}}$								ns
$t_{pd(12)}$	$\overline{\text{CS}}$↑	Any Q								ns
$t_{pd(13)}$	$\overline{\text{CS}}$↑	Any $\overline{\text{RAS}}$								ns
$t_{pd(14)}$	$\overline{\text{CS}}$↑	Any $\overline{\text{CAS}}$								ns
$t_{pd(15)}$	SEL0 or SEL1	Any $\overline{\text{RAS}}$								ns
$t_{pd(16)}$	SEL0 or SEL1	Any $\overline{\text{CAS}}$								ns
$t_{en(17)}$	$\overline{\text{OE}}$↓	Any Q								ns
$t_{en(18)}$	$\overline{\text{OE}}$↓	Any $\overline{\text{RAS}}$								ns
$t_{en(19)}$	$\overline{\text{OE}}$↓	Any $\overline{\text{CAS}}$								ns
$t_{dis(20)}$	$\overline{\text{OE}}$↑	Any Q								ns
$t_{dis(21)}$	$\overline{\text{OE}}$↑	Any $\overline{\text{RAS}}$								ns
$t_{dis(22)}$	$\overline{\text{OE}}$↑	Any $\overline{\text{CAS}}$								ns

NOTE 2: Load circuit and voltage waveforms are shown in Section 1.

THCT4502
DYNAMIC RAM CONTROLLER

D2905, OCTOBER 1985

- Inputs are TTL- and CMOS-Voltage Compatible
- Controls Operation of 64K and 256K Dynamic RAMs
- Creates Static RAM Appearance
- One Package Contains Address Multiplexer, Refresh Control, and Timing Control
- Directly Addresses and Drives Up to 2 Megabytes of Memory Without External Drivers
- Operates from Microprocessor Clock
  - No Crystals, Delay Lines, or RC Networks
  - Eliminates Arbitration Delays
- Refresh May Be Internally or Externally Initiated
- Versatile
  - Strap-Selected Refresh Rate
  - Synchronous, Predictable Refresh
  - Selection of Distributed, Transparent, and Cycle-Steal Refresh Modes
  - Interfaces Easily to Popular Microprocessors
  - Asynchronous $\overline{\text{RESET}}$ Function Provided in FK and FN Packages
- High-Performance Si-Gate CMOS Technology
- Strap-Selected Wait State Generation for Microprocessor/Memory Speed Matching
- Ability to Synchronize or Interleave Controller with the Microprocessor System (Including Multiple Controllers)
- 3-State Outputs Allow Multiport Memory Configuration
- Performance Range:
  125 ns ALE low to $\overline{\text{CAS}}$ low
- Compatible with TMS4500A/B and with VTI VL4500A and VL4502
- Available in Plastic and Ceramic Chip Carriers in Addition to Plastic and Ceramic DIPs
- Dependable Texas Instruments Quality and Reliability

THCT4502 . . . JD OR N PACKAGE
(TOP VIEW)

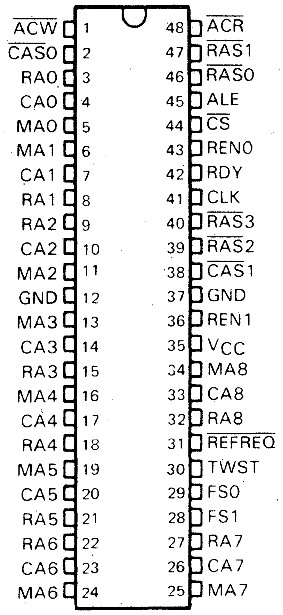
ACW 1
CAS0 2
RA0 3
CA0 4
MA0 5
MA1 6
CA1 7
RA1 8
RA2 9
CA2 10
MA2 11
GND 12
MA3 13
CA3 14
RA3 15
MA4 16
CA4 17
RA4 18
MA5 19
CA5 20
RA5 21
RA6 22
CA6 23
MA6 24
48 ACR
47 RAS1
46 RAS0
45 ALE
44 CS
43 REN0
42 RDY
41 CLK
40 RAS3
39 RAS2
38 CAS1
37 GND
36 REN1
35 VCC
34 MA8
33 CA8
32 RA8
31 REFREQ
30 TWST
29 FS0
28 FS1
27 RA7
26 CA7
25 MA7

THCT4502 . . . FK OR FN PACKAGE
(TOP VIEW)

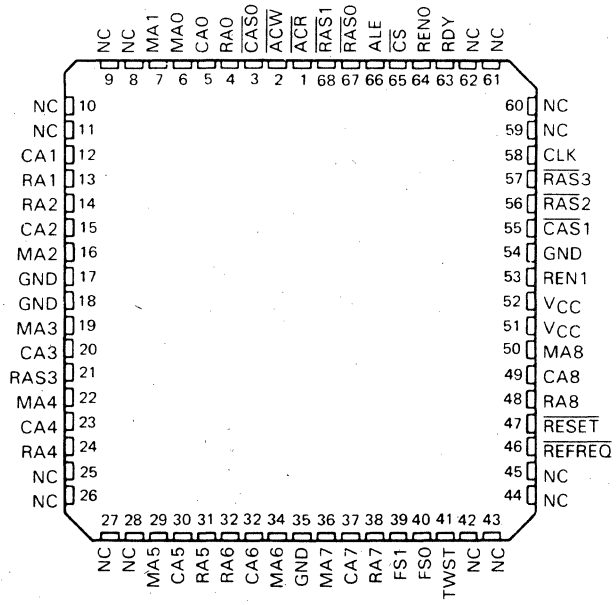
NC 9
NC 8
MA1 7
MA0 6
CA0 5
RA0 4
CAS0 3
ACW 2
ACR 1
RAS1 68
RAS0 67
ALE 66
CS 65
REN0 64
RDY 63
NC 62
NC 61
NC 10
NC 11
CA1 12
RA1 13
RA2 14
CA2 15
MA2 16
GND 17
GND 18
MA3 19
CA3 20
RAS3 21
MA4 22
CA4 23
RA4 24
NC 25
NC 26
60 NC
59 NC
58 CLK
57 RAS3
56 RAS2
55 CAS1
54 GND
53 REN1
52 VCC
51 VCC
50 MA8
49 CA8
48 RA8
47 RESET
46 REFREQ
45 NC
44 NC
27 NC
28 NC
29 MA5
30 CA5
31 RA5
32 RA6
32 CA6
34 MA6
35 GND
36 MA7
37 CA7
38 RA7
39 FS1
40 FS0
41 TWST
42 NC
43 NC

NC – No internal connection

PRODUCTION DATA documents contain information current as of publication date. Products conform to these specifications per the terms of Texas Instruments standard warranty. Production processing does not necessarily include testing of all parameters.

Copyright © 1985, Texas Instruments Incorporated

TEXAS INSTRUMENTS
POST OFFICE BOX 225012 • DALLAS, TEXAS 75265

THCT4502
DYNAMIC RAM CONTROLLER

description

The THCT4502 is a monolithic DRAM system controller providing address multiplexing, timing, control and refresh/access arbitration functions to simplify the interface of dynamic RAMs to microprocessor systems.

The controller contains an 18-bit multiplexer that generates the address lines for the memory device from the 18 system address bits and provides the strobe signals required by the memory to decode the address. A 9-bit refresh counter generates up to 512 row addresses required to refresh.

A refresh timer is provided to generate the necessary timing to refresh the dynamic memories and ensure data retention.

The THCT4502 also contains refresh/access arbitration circuitry to resolve conflicts between access requests and memory-refresh cycles.

The THCT4502 is characterized for operation from 0°C to 70°C.

functional block diagram

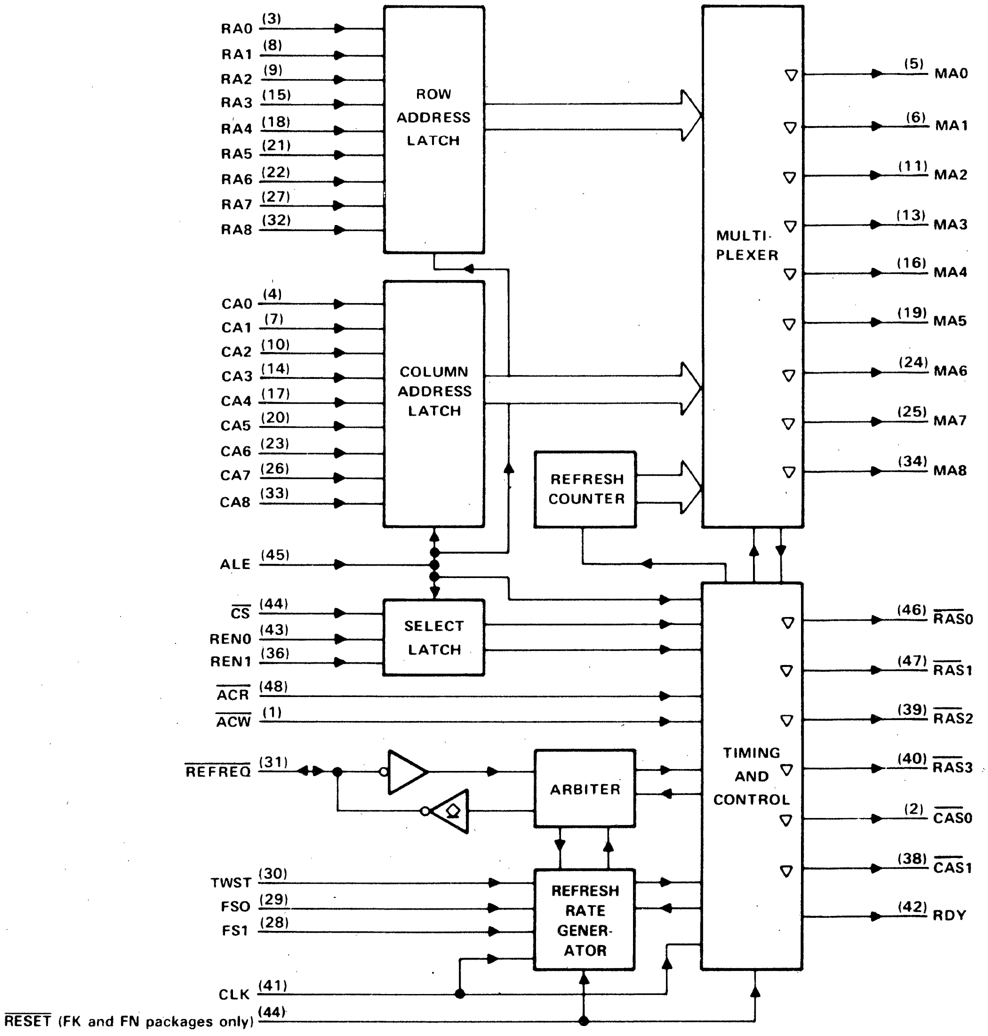

RA0 (3)
RA1 (8)
RA2 (9)
RA3 (15)
RA4 (18)
RA5 (21)
RA6 (22)
RA7 (27)
RA8 (32)
ROW ADDRESS LATCH
CA0 (4)
CA1 (7)
CA2 (10)
CA3 (14)
CA4 (17)
CA5 (20)
CA6 (23)
CA7 (26)
CA8 (33)
COLUMN ADDRESS LATCH
REFRESH COUNTER
MULTI-PLEXER
(5) MA0
(6) MA1
(11) MA2
(13) MA3
(16) MA4
(19) MA5
(24) MA6
(25) MA7
(34) MA8
ALE (45)
CS (44)
REN0 (43)
REN1 (36)
SELECT LATCH
ACR (48)
ACW (1)
REFREQ (31)
ARBITER
TWST (30)
FS0 (29)
FS1 (28)
REFRESH RATE GENERATOR
CLK (41)
RESET (FK and FN packages only) (44)
TIMING AND CONTROL
(46) RAS0
(47) RAS1
(39) RAS2
(40) RAS3
(2) CAS0
(38) CAS1
(42) RDY

Pin numbers shown are for JD and N packages.

TEXAS INSTRUMENTS
POST OFFICE BOX 225012 • DALLAS, TEXAS 75265

pin descriptions

RA0-RA8	Input	Row Address — These address inputs are used to generate the row address for the multiplexer.
CA0-CA8	Input	Column Address — These address inputs are used to generate the column address for the multiplexer.
MA0-MA8	Output	Memory Address — These three-state outputs are designed to drive the addresses of the dynamic RAM array.
ALE	Input	Address Latch Enable — This input is used to latch the 18 address inputs, $\overline{\text{CS}}$, REN0, and REN1. This also initiates an access cycle if $\overline{\text{CS}}$ is low. The rising edge (low level to high level) of ALE returns all $\overline{\text{RAS}}$ outputs to the high level.
$\overline{\text{CS}}$	Input	Chip Select — A low on this input enables an access cycle. The trailing edge of ALE latches the chip select input.
REN0, REN1	Inputs	$\overline{\text{RAS}}$ Enable 0 and 1 — These inputs are used to select one of four banks of RAM when $\overline{\text{CS}}$ is low. When REN1 is low, the lower banks are enabled via $\overline{\text{CAS0}}$, $\overline{\text{RAS0}}$, and $\overline{\text{RAS1}}$. When REN1 is high, the higher banks are enabled via $\overline{\text{CAS1}}$, $\overline{\text{RAS2}}$ and $\overline{\text{RAS3}}$. REN0 selects $\overline{\text{RAS0}}$ and $\overline{\text{RAS2}}$ when low, or $\overline{\text{RAS1}}$ and $\overline{\text{RAS3}}$ when high. (see Table 2).
$\overline{\text{ACR}}$, $\overline{\text{ACW}}$	Input	Access Control, Read; Access Control, Write — A low on either of these inputs causes the column address to appear on MA0-MA8 and a low-going pulse from $\overline{\text{CAS}}$. The rising edge of $\overline{\text{ACR}}$ or $\overline{\text{ACW}}$ terminates the cycle by forcing $\overline{\text{RAS}}$ and $\overline{\text{CAS}}$ high. When $\overline{\text{ACR}}$ and $\overline{\text{ACW}}$ are both low, MA0-MA8, $\overline{\text{RAS0}}$, $\overline{\text{RAS1}}$, $\overline{\text{RAS2}}$, $\overline{\text{RAS3}}$, $\overline{\text{CAS0}}$ and $\overline{\text{CAS1}}$ go into a high-impedance (floating) state.
CLK	Input	System Clock — This input provides the master timing to generate refresh cycle timings and refresh rate. Refresh rate is determined by the TWST, FS1, and FS0 inputs.
$\overline{\text{REFREQ}}$	Input	Refresh Request — This input should be driven by an open-collector or open-drain output. On input, a low-going edge initiates a refresh cycle and will cause the internal refresh timer to be reset on the next falling edge of the CLK. As an output, a low-going edge signals an internal refresh request and that the refresh timer will be reset on the next low-going edge of CLK. $\overline{\text{REFREQ}}$ will remain low until the refresh cycle is in progress and the current refresh address is present on MA0-MA8. (Note: $\overline{\text{REFREQ}}$ contains an internal active pullup with a nominal resistance of 10 kΩ, which is disabled when $\overline{\text{REFREQ}}$ is low).
$\overline{\text{RAS0}}$, $\overline{\text{RAS1}}$ $\overline{\text{RAS2}}$, $\overline{\text{RAS3}}$	Output	Row Address Strobe — These three-state outputs are used to latch the row address into the bank of DRAMs selected by REN0 and REN1. On refresh, all $\overline{\text{RAS}}$ signals are active.
$\overline{\text{CAS0}}$, $\overline{\text{CAS1}}$	Output	Column Address Strobe — These three-state outputs are used to latch the column address into the DRAM array.
RDY	Output	Ready — This totem-pole output synchronizes memories that are too slow to guarantee microprocessor access time requirements. This output is also used to inhibit access cycles during refresh when in cycle-steal mode.

pin descriptions (continued)

TWST	Input	Timing/Wait Strap — A high on this input indicates a wait state should be added to each memory cycle. In addition it is used in conjunction with FS0 and FS1 to determine refresh rate and timing or initialize the controller.
FS0, FS1	Inputs	Frequency Select 0; Frequency Select 1 — These are strap inputs to select Mode and Frequency of operation as shown in Table 1.
$\overline{\text{RESET}}$[†]	Input	$\overline{\text{RESET}}$ — Active-low input to initialize the controller asynchronously. Refresh Address is set to IFF_{16}, internal refresh requests, synchronizer, and frequency divider are cleared. (Note: $\overline{\text{RESET}}$ contains an internal pullup resistor with a nominal resistance of 100 kΩ, which allows this pin to be left open.)

[†] This function is available only in the FK and FN packages.

TABLE 1. STRAP CONFIGURATION

STRAP INPUT MODES			WAIT STATES FOR MEMORY ACCESS	REFRESH RATE	MINIMUM CLOCK FREQUENCY (MHz)	REFRESH FREQUENCY (kHz)	CLOCK CYCLES FOR EACH REFRESH
TWST	FS1	FS0					
L	L	L[†]	0	EXTERNAL	–	REFREQ	4
L	L	H	0	EXTERNAL	–	REFREQ	3
L	H	L	0	CLK ÷ 61	3.904	64-95[‡]	3
L	H	H	0	CLK ÷ 91	5.824	64-88[§]	4
H	L	L	1	CLK ÷ 61	3.904	64-95[‡]	3
H	L	H	1	CLK ÷ 91	5.824	64-75[‡]	4
H	H	L	1	CLK ÷ 106	6.784	64-73[‡]	4
H	H	H	1	CLK ÷ 121	7.744	64-83[¶]	4

[†] This strap configuration resets the Refresh Timer Circuitry.

[‡] Upper figure in refresh frequency is the frequency that is produced if the minimum clock frequency of the next select state is used.

[§] Refresh frequency if clock frequency is 8 MHz.

[¶] Refresh frequency if clock frequency is 10 MHz.

TABLE 2. OUTPUT STROBE SELECTION

CONTROL INPUT		SELECTED OUTPUT					
REN1	REN0	$\overline{\text{RAS0}}$	$\overline{\text{RAS1}}$	$\overline{\text{RAS2}}$	$\overline{\text{RAS3}}$	$\overline{\text{CAS0}}$	$\overline{\text{CAS1}}$
L	L	X				X	
L	H		X			X	
H	L			X			X
H	H				X		X

NOTE: Changing the logic value of REN1 after a low-to-high transition of ALE and before $\overline{\text{ACX}}$ rises causes the other $\overline{\text{CAS}}$ to fall. Both $\overline{\text{CAS}}$ signals remain low until $\overline{\text{ACX}}$ rises.

functional description

The THCT4502 consists of six basic blocks: address and select latches, refresh rate generator, refresh counter, the multiplexer, the arbiter, and the timing and control block.

address and select latches

The address and select latches allow the DRAM controller to be used in systems that multiplex address and data on the same lines without external latches. The row address latches are transparent, meaning that while ALE is high, the output at MA0-MA8 follows the inputs RA0-RA8.

refresh rate generator

The refresh rate generator is a counter that indicates to the arbiter that it is time for a refresh cycle. The counter divides the clock frequency according to the configuration straps as shown in Table 1. The counter is reset when a refresh cycle is requested or when TWST, FS1, and FS0 are low. The configuration straps allow the matching of memories to the system access time. Upon power-up it is necessary to provide a reset signal by driving all three straps to the controller (or $\overline{\text{RESET}}$ for devices in the FK and FN packages only) low. A systems power-on reset ($\overline{\text{RESET}}$) can be used to do this by connecting it to those straps that are desired high during operation. During this reset period, at least four clock cycles should occur.

refresh counter

The refresh counter contains the address of the row to be refreshed. The counter is decremented after each refresh cycle. A low-to-high transition on TWST sets the refresh counter to $1FF_{16}$ (511_{10}).

multiplexer

The multiplexer provides the DRAM array with row, column, and refresh addresses at the proper times. Its inputs are the address latches and the refresh counter. The outputs provide up to 18 multiplexed addresses on nine lines.

arbiter

The arbiter provides two operational cycles: access and refresh. The arbiter resolves conflicts between cycle requests and cycles in execution, and schedules the inhibited cycle when used in cycle-steal mode.

timing and control block

The timing and control block executes the operational cycle at the request of the arbiter. It provides the DRAM array with $\overline{\text{RAS}}$ and $\overline{\text{CAS}}$ signals. It provides the CPU with a RDY signal. It controls the multiplexer during all cycles. It resets the refresh rate generator and decrements the refresh counter during refresh cycles.

absolute maximum ratings over operating free-air temperature range (unless otherwise noted)[†]

Supply voltage range, V_{CC} (See Note 1)	−1.5 V to 7 V
Input diode current, I_{IK} ($V_I < 0$, $V_I > V_{CC}$)	±20 mA
Output diode current, I_{OK} ($V_O < 0$, $V_O > V_{CC}$)	±20 mA
Continuous output current, I_O ($V_O = 0$ to V_{CC})	±35 mA
Continuous current through V_{CC} or GND pins	±70 mA
Operating free-air temperature range	0 °C to 70 °C
Storage temperature range	−65 °C to 150 °C
Lead temperature 1,6 mm (1/16 inch) from case for 60 seconds: FK or JD package	300 °C
Lead temperature 1,6 mm (1/16 inch) from case for 10 seconds: FN or N package	260 °C

[†] Stresses beyond those listed under "Absolute Maximum Ratings" may cause permanent damage to the device. This is stress rating only, and functional operation of the device at these or any other conditions beyond those indicated in the "Recommended Operating Conditions" section of this specification is not implied. Exposure to absolute-maximum-rated conditions for extended periods may affect device reliability.

NOTE 1: Voltage values are with respect to network ground.

recommended operating conditions

		MIN	NOM	MAX	UNIT
V_{CC}	Supply voltage	4.5	5	5.5	V
V_{IH}	High-level input voltage	2		$V_{CC}+0.5$	V
V_{IL}	Low-level input voltage	-0.5†		0.8	V
V_O	Output voltage	-0.5		$V_{CC}+0.5$	V
t_t	Input transition (rise and fall) time	0		500	ns
T_A	Operating free-air temperature	0		70	°C

† The algebraic convention, where the more negative (less positive) limit is designated as minimum, is used in this data sheet for logic voltage levels only.

electrical characteristics over recommended operating free-air temperature range (unless otherwise noted)

PARAMETER			TEST CONDITIONS	V_{CC}	$T_A = 25°C$			MIN	MAX	UNIT
					MIN	TYP	MAX			
V_{OH}	High-level output voltage	MA0–MA8, $\overline{\text{RAS0}}$–$\overline{\text{RAS3}}$, $\overline{\text{CAS0}}$–$\overline{\text{CAS1}}$	$I_{OH} = -20\ \mu A$	4.5 V	4.4			4.4		V
			$I_{OH} = -6\ mA$	4.5 V	3.86			3.76		
		RDY	$I_{OH} = -20\ \mu A$	4.5 V	4.4			4.4		
			$I_{OH} = -4\ mA$	4.5 V	3.86			3.76		
		$\overline{\text{REFREQ}}$	$I_{OH} = -20\ \mu A$	4.5 V	4			3.8		
V_{OL}	Low-level output voltage	RDY, $\overline{\text{REFREQ}}$	$I_{OL} = 20\ \mu A$	4.5 V			0.1		0.1	V
			$I_{OL} = 4\ mA$	4.5 V			0.32		0.37	
		MA0–MA8, $\overline{\text{RAS0}}$–$\overline{\text{RAS3}}$, $\overline{\text{CAS0}}$, $\overline{\text{CAS1}}$	$I_{OL} = 20\ \mu A$	4.5 V			0.1		0.1	
			$I_{OL} = 6\ mA$	4.5 V			0.32		0.37	
I_{IH}	High-level input current except $\overline{\text{REFREQ}}$		$V_I = 5.5\ V$	5.5 V			0.1		1	μA
I_{IL}	Low-level input current	$\overline{\text{REFREQ}}$	$V_I = 0$	5.5 V			-5		-50	μA
		$\overline{\text{RESET}}$					-100		-250	
		All others					-0.1		-1	
I_{OZ}‡	Off-state output current (3-state outputs only)		$V_O = 0$ to 5.5 V	5.5 V			±5		±50	μA
I_{CC}	Supply current		$V_I = V_{CC}$ or 0, $I_O = 0$	5.5 V			5		15	mA
ΔI_{CC}§	Supply current change		One input at 0.5 V or 2.4 V, Other inputs at 0 V or V_{CC}	5.5 V		1.4	2.4		3	mA
C_i	Input capacitance		$V_I = 0$, f = 1 MHz	5.5 V		5	10		10	pF

‡ This parameter, I_{OZ}, the high impedance-state output current, applies only for three-state outputs and transceiver I/O pins.
§ This is the increase in supply current for each input that is at one of the specified TTL voltage levels rather than 0 V or V_{CC}.

timing requirements over recommended ranges of supply voltage and operating free-air temperature (unless otherwise noted)

PARAMETER		THCT4502-125		UNIT
		MIN	MAX	
$t_{c(C)}$	CLK cycle time	100		ns
$t_{w(CH)}$	CLK high pulse duration	45		ns
$t_{w(CL)}$	CLK low pulse duration	45		ns
$t_{AEL\text{-}CL}$	Time delay, ALE low to CLK starting low (see Note 1)	25		ns
$t_{CL\text{-}AEL}$	Time delay, CLK low to ALE starting low (see Note 1)	15		ns
$t_{CL\text{-}AEH}$	Time delay, CLK low to ALE	15		ns
$t_{w(AEH)}$	Pulse width ALE high	45		ns
$t_{AV\text{-}AEL}$	Time delay, address REN1, $\overline{\text{CS}}$ valid to ALE low	10		ns
$t_{AEL\text{-}AX}$	Time delay, ALE low to address not valid	15		ns
$t_{AEL\text{-}ACL}$	Time delay, ALE low to $\overline{\text{ACX}}$ low (see Notes 3, 4, 5, and 6)	$t_{h(RA)}+30$		ns
$t_{ACH\text{-}CL}$	Time delay, $\overline{\text{ACX}}$ high to CLK low (see Notes 3 and 7)	30		ns
$t_{ACL\text{-}CH}$	Time delay, $\overline{\text{ACX}}$ low to CLK starting high (to remove RDY)	30		ns
$t_{RQL\text{-}CL}$	Time delay, $\overline{\text{REFREQ}}$ low to CLK starting low (see Note 8)	35		ns
$t_{w(RQL)}$	Pulse width $\overline{\text{REFREQ}}$ low	30		ns
$t_{w(ACL)}$	$\overline{\text{ACX}}$ low width (see Note 9)	120		ns
t_{reset}	Power-up reset	$4t_{cCLK}$		ns

NOTES:
1. Coincidence of the trailing edge of CLK and the trailing edge of ALE should be avoided as the refresh/access occurs on the trailing CLK edge.
2. If ALE rises before $\overline{\text{ACX}}$ and a refresh request is present, the falling edge of CLK after $t_{CL\text{-}AEH}$ will output the refresh address to MA0-MA7 and initiate a refresh cycle.
3. These specifications relate to system timing and do not directly reflect device performance.
4. On the access grant cycle following refresh, the occurrence of $\overline{\text{CAS}}$ low depends on the relative occurrence of ALE low to $\overline{\text{ACX}}$ low. If $\overline{\text{ACX}}$ occurs prior to or coincident with ALE, then $\overline{\text{CAS}}$ is timed from the CLK high transition that causes $\overline{\text{RAS}}$ low. If $\overline{\text{ACX}}$ occurs 20 ns or more after ALE, then $\overline{\text{CAS}}$ is timed from the CLK low transition following the CLK high transition causing $\overline{\text{RAS}}$ low.
5. For maximum speed access (internal delays on both access and access grant cycles), $\overline{\text{ACX}}$ should occur prior to or coincident with ALE.
6. $t_{h(RA)}$ is the dynamic memory row address hold time. $\overline{\text{ACX}}$ should follow ALE by $t_{AEL\text{-}CEL}$ in systems where the required $t_{h(RA)}$ is greater than $t_{REL\text{-}MAX}$ minimum.
7. The minimum of 20 ns is specified to ensure arbitration will occur on falling CLK edge, $t_{ACH\text{-}CL}$ also affects precharge time such that the minimum $t_{ACH\text{-}CL}$ should be equal or greater than: $t_{w(RH)} - t_{w(CL)} + 30$ ns (for a cycle where $\overline{\text{ACX}}$ high occurs prior to ALE high) where $t_{w(RH)}$ is the DRAM $\overline{\text{RAS}}$ precharge time.
8. This parameter is necessary only if refresh arbitration is to occur on this low-going CLK edge (in systems where refresh is synchronized to external events).
9. The specification $t_{w(ACL)}$ is designed to allow a $\overline{\text{CAS}}$ pulse. This assures normal operation of the device in testing and system operation.

switching characteristics over recommended supply voltage range and operating free-air temperature range (see Figure 1)

PARAMETER		TEST CONDITIONS	THCT4502-125		UNIT
			MIN	MAX	
$t_{AEL\text{-}REL}$	Time delay, ALE low to $\overline{RAS}$ starting low	C_L = 180 pF		45	ns
$t_{RAV\text{-}MAV}$	Time delay, row address valid to memory address valid	C_L = 360 pF		50	ns
$t_{AEH\text{-}MAV}$	Time delay, ALE high to valid memory address	C_L = 360 pF		90	ns
$t_{AEL\text{-}RYL}$	Time delay, ALE to RDY starting low (TWST = 1 or refresh in progress)	C_L = 40 pF		40	ns
$t_{AEL\text{-}CEL}$	Time delay, ALE low to $\overline{CAS}$ starting low (see Note 10)	C_L = 360 pF	50	125	ns
$t_{AEH\text{-}REH}$	Time delay, ALE high to $\overline{RAS}$ starting high	C_L = 180 pF		50	ns
$t_{ACL\text{-}MAX}$	Row address valid after $\overline{ACX}$	C_L = 360 pF	15		ns
$t_{MAV\text{-}CEL}$	Time delay, memory address valid to $\overline{CAS}$ starting low	C_L = 360 pF	0		ns
$t_{ACL\text{-}CEL}$	Time delay, $\overline{ACX}$ low to $\overline{CAS}$ starting low (see Note 10)	C_L = 360 pF	40	100	ns
$t_{ACH\text{-}REH}$	Time delay, $\overline{ACX}$ to $\overline{RAS}$ starting high	C_L = 180 pF		55	ns
$t_{ACH\text{-}CEH}$	Time delay, $\overline{ACX}$ high to $\overline{CAS}$ starting high	C_L = 360 pF	5	45	ns
$t_{ACH\text{-}MAX}$	Column address valid after $\overline{ACX}$ high	C_L = 360 pF	10		ns
$t_{CH\text{-}RYH}$	Time delay, CLK high to RDY starting high (after $\overline{ACX}$ low) (see Note 11)	C_L = 40 pF		60	ns
$t_{RFL\text{-}RFL}$	Time delay, $\overline{REFREQ}$ external till supported by $\overline{REFREQ}$ internal	C_L = 40 pF		35	ns
$t_{CH\text{-}RFL}$	Time delay, CLK high till $\overline{REFREQ}$ internal starting low	C_L = 40 pF		50	ns
$t_{CL\text{-}MAV}$	Time delay, CLK low till refrefresh address valid	C_L = 360 pF		100	ns
$t_{CH\text{-}RRL}$	Time delay, CLK high till refresh $\overline{RAS}$ starting low	C_L = 180 pF	10	60	ns
$t_{MAV\text{-}RRL}$	Time delay, refresh address valid till refresh $\overline{RAS}$ low	C_L = 180 pF	5		ns
$t_{CL\text{-}RFH}$	Time delay, CLK low to $\overline{REFREQ}$ starting high (3 cycle refresh)	C_L = 40 pF		70	ns
$t_{CH\text{-}RFH}$	Time delay, CLK high to $\overline{REFREQ}$ starting high (4 cycle refresh)	C_L = 40 pF		70	ns
$t_{CH\text{-}RRH}$	Time delay, CLK high to refresh $\overline{RAS}$ starting high	C_L = 160 pF	5	60	ns
$t_{CH\text{-}MAX}$	Refresh address valid after CLK high	C_L = 360 pF	10		ns

NOTES: 10. The falling edge of $\overline{CAS}$ occurs when both ALE low to $\overline{CAS}$ low time delay ($t_{AEL\text{-}CEL}$) and $\overline{ACX}$ low to $\overline{CAS}$ low time delay ($t_{ACL\text{-}CEL}$) have elapsed, i.e., if $\overline{ACX}$ goes low prior to ($t_{AEL\text{-}CEL} - t_{ACL\text{-}CEL}$) after the falling edge of ALE, the falling edge of $\overline{CAS}$ is measured from the falling edge of ALE ($t_{AEL\text{-}CEL}$). Otherwise, the access time increases and the falling edge of $\overline{CAS}$ is measured from the falling edge of $\overline{ACX}$ ($t_{ACL\text{-}CEL}$).

11. RDY returns high on the rising edge of CLK. If TWST = 0, then on an access grant cycle RDY goes high on the same edge that causes access $\overline{RAS}$ low. If TWST = 1, then RDY goes to the high level on the first rising CLK edge after $\overline{ACX}$ goes low on access cycles and on the next rising edge after the edge that causes access $\overline{RAS}$ low on access grant cycles (assuming $\overline{ACX}$ low).

switching characteristics over recommended supply voltage range and operating free-air temperature range (see Figure 1) (continued)

PARAMETER		TEST CONDITIONS	THCT4502-125		UNIT
			MIN	MAX	
$t_{CH\text{-}REL}$	Time delay, CLK high till access $\overline{RAS}$ starting low	C_L = 180 pF		60	ns
$t_{CL\text{-}CEL}$	Time delay, CLK low to access $\overline{CAS}$ starting low (see Note 12)	C_L = 360 pF		100	ns
$t_{CL\text{-}MAX}$	Row address valid after CLK low	C_L = 360 pF	25		ns
$t_{REL\text{-}MAX}$	Row address valid after $\overline{RAS}$ low	C_L = 360 pF	25		ns
$t_{AEH\text{-}MAX}$	Column address valid after ALE high	C_L = 360 pF	10		ns
t_{dis}	Output disable time (3-state outputs)	C_L = 360 pF		125	ns
t_{en}	Output enable time (3-state outputs)	C_L = 360 pF		75	ns
$t_{CAV\text{-}CEL}$	Time delay, column address valid to $\overline{CAS}$ starting low after refresh (see Note 12)	C_L = 360 pF	0		ns
$t_{CH\text{-}CEL}$	Time delay, CLK high to access $\overline{CAS}$ starting low (see Note 13)	C_L = 360 pF		180	ns
$t_{t(CEL)}$	$\overline{CAS}$ fall time	C_L = 360 pF		20	ns
$t_{t(CEH)}$	$\overline{CAS}$ rise time	C_L = 360 pF		50	ns
$t_{t(REL)}$	$\overline{RAS}$ fall time	C_L = 180 pF		30	ns
$t_{t(REH)}$	$\overline{RAS}$ rise time	C_L = 180 pF		40	ns
$t_{t(MAV)}$	Address transition time	C_L = 180 pF		40	ns
$t_{t(RYL)}$	RDY fall time	C_L = 40 pF		20	ns
$t_{t(RYH)}$	RDY rise time	C_L = 40 pF		50	ns

NOTES: 12. The occurrence of $\overline{CAS}$ low is guaranteed not to occur until the column address is valid on MAX.

13. On the access grant cycle following refresh, the occurrence of $\overline{CAS}$ low depends on the relative occurrence of ALE low to $\overline{ACX}$ low. If $\overline{ACX}$ occurs prior to or coincident with ALE then $\overline{CAS}$ is timed from the CLK high transition that causes $\overline{RAS}$ low. If $\overline{ACX}$ occurs 20 ns or more after ALE then $\overline{CAS}$ is timed from the CLK low transition following the CLK high transition causing $\overline{RAS}$ low. (See Refresh Cycle Timing Diagram)

PARAMETER MEASUREMENT INFORMATION

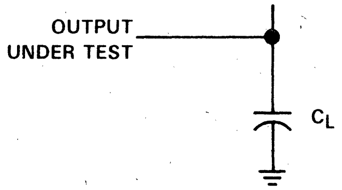

FIGURE 1. LOAD CIRCUIT

TMS2150
CACHE ADDRESS COMPARATOR

D2911, MARCH 1982—REVISED SEPTEMBER 1985

- **Fast Address to Match Valid Delay — Three Speed Ranges: 35 ns, 45 ns, 55 ns**
- **512 × 9 Internal RAM**
- **300-Mil 24-Pin Ceramic Side-Brazed or Plastic Dual-In-Line or Small Outline Packages**
- **Max Power Dissipation: 660 mW**
- **On-Chip Parity Generation and Checking**
- **Parity Error Output/Force Parity Error Input**
- **On-Chip Address/Data Comparator**
- **Asynchronous, Single-Cycle Reset**
- **Easily Expandable**
- **Fully Static**
- **Reliable SMOS (Scaled NMOS) Technology**
- **TTL- and CMOS-Compatible Inputs and Outputs**

DW, JD, OR NT PACKAGE
(TOP VIEW)

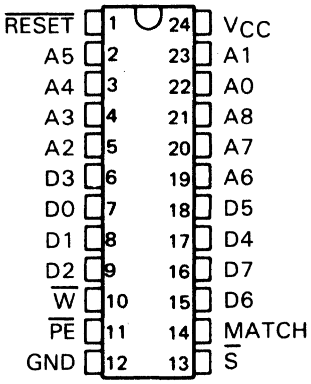

description

This 8-bit-slice cache address comparator consists of a high-speed 512 × 9 static RAM array, parity generator, parity checker, and 9-bit high-speed comparator. It is fabricated using N-channel silicon gate technology for high speed and simple interface with MOS and bipolar TTL circuits. The cache address comparator is easily cascadable for wider tag addresses or deeper tag memories. Significant reductions in cache memory component count, board area, and power dissipation can be achieved with this device.

When $\overline{\text{S}}$ is low and $\overline{\text{W}}$ is high, the cache address comparator compares the contents of the memory location addressed by A0-A8 with the data on D0-D7 plus generated parity. An equality is indicated by a high level on the MATCH output. A low-level output from $\overline{\text{PE}}$ signifies a parity error in the internal RAM data. $\overline{\text{PE}}$ is an N-channel open-drain output for easy OR-tying. During a write cycle ($\overline{\text{S}}$ and $\overline{\text{W}}$ low), data on D0-D7 plus generated even parity are written in the 9-bit memory location addressed by A0-A8. Also during write, a parity error may be forced by holding $\overline{\text{PE}}$ low.

A $\overline{\text{RESET}}$ input is provided for initialization. When $\overline{\text{RESET}}$ goes low, all 512 × 9 RAM locations are cleared and the MATCH output is forced high.

The cache address comparator operates from a single +5 V supply and is offered in a 24-pin 300-mil ceramic side brazed or plastic dual-in-line packages. The device is fully TTL compatible and is characterized for operation from 0 °C to 70 °C.

MATCH OUTPUT DESCRIPTION

MATCH = V_{OH} if: [A0-A8] = D0-D7 + parity,
or: $\overline{\text{RESET}} = V_{IL}$,
or: $\overline{\text{S}} = V_{IH}$,
or: $\overline{\text{W}} = V_{IL}$

MATCH = V_{OL} if: [A0-A8] $\neq$ D0-D7 + parity,
with $\overline{\text{RESET}} = V_{IH}$,
$\overline{\text{S}} = V_{IL}$, and $\overline{\text{W}} = V_{IH}$

FUNCTION TABLE

OUTPUT		FUNCTION DESCRIPTION
MATCH	$\overline{\text{PE}}$	
L	L	Parity Error
L	H	Not Equal
H	L	Undefined Error
H	H	Equal

Where S = V_{IL}, W = V_{IH}, RESET = V_{IH}

PRODUCTION DATA documents contain information current as of publication date. Products conform to specifications per the terms of Texas Instruments standard warranty. Production processing does not necessarily include testing of all parameters.

Copyright © 1983, Texas Instruments Incorporated

functional block diagram (positive logic)

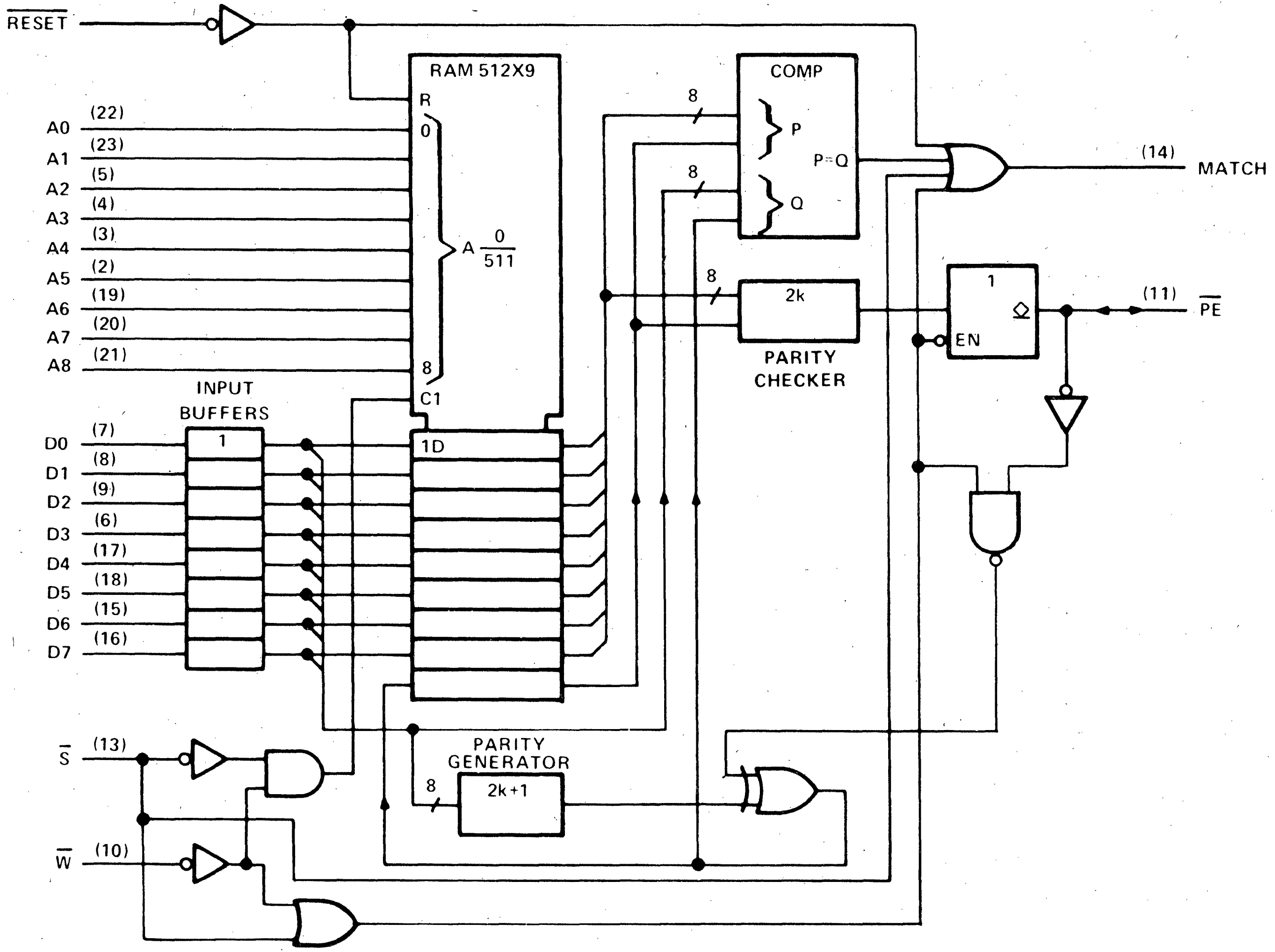
RESET
RAM 512X9
R
0
A $\frac{0}{511}$
8
C1
1D
COMP
P
P=Q
Q
8
8
8
2k
PARITY CHECKER
1
EN
(14)
MATCH
(11)
PE
A0 (22)
A1 (23)
A2 (5)
A3 (4)
A4 (3)
A5 (2)
A6 (19)
A7 (20)
A8 (21)
INPUT BUFFERS
1
D0 (7)
D1 (8)
D2 (9)
D3 (6)
D4 (17)
D5 (18)
D6 (15)
D7 (16)
PARITY GENERATOR
8
2k+1
S (13)
W (10)

This diagram has been changed to correct errors in previous versions. No functional change has been made in the chip.

PIN FUNCTIONAL DESCRIPTION

PIN		DESCRIPTION
NAME	NO.	
$\overline{\text{RESET}}$	1	$\overline{\text{RESET}}$ input. Asynchronously clears entire RAM array and forces MATCH high when $\overline{\text{RESET}}$ is at V_{IL} and $\overline{\text{W}}$ is at V_{IH}.
A0 A1 A2 A3 A4 A5 A6 A7 A8	22 23 5 4 3 2 19 20 21	Address inputs. Address 1 of 512-by-9-bit random-access memory locations. Must be stable for the duration of the write cycle.
D0 D1 D2 D3 D4 D5 D6 D7	7 8 9 6 17 18 15 16	Data inputs. Compared with memory location addressed by A0-A8 when $\overline{\text{W}}$ is at V_{IH} and $\overline{\text{S}}$ is at V_{IL}. Provide input data to RAM when $\overline{\text{W}}$ is at V_{IL} and $\overline{\text{S}}$ is at V_{IL}.
$\overline{\text{W}}$	10	Write control input. Writes D0 through D7 and generated parity into RAM and forces MATCH high when $\overline{\text{W}}$ is at V_{IL} and $\overline{\text{S}}$ is at V_{IL}. Places selected device in compare mode if $\overline{\text{W}}$ is at V_{IH}.
$\overline{\text{PE}}$	11	Parity error input/output. During write cycles, $\overline{\text{PE}}$ can force a parity error into the 9-bit location specified by A0 through A8 when $\overline{\text{PE}}$ is at V_{IL}. For compare cycles, $\overline{\text{PE}}$ at V_{OL} indicates a parity error in the stored data. $\overline{\text{PE}}$ is an open-drain output so an external pull-up resistor is required.
GND	12	Ground
$\overline{\text{S}}$	13	Chip select input. Enables device when $\overline{\text{S}}$ is at V_{IL}. Deselects device and forces MATCH high when $\overline{\text{S}}$ is at V_{IH}.
MATCH	14	When MATCH output is at V_{OH} during a compare cycle, D0 through D7 plus parity equal the contents of the 9-bit memory location addressed by A0 through A8.
V_{CC}	24	5-V supply voltage

absolute maximum ratings over operating free-air temperature range (unless otherwise specified)

Supply voltage range, V_{CC} (see Note 1)	−1.5 to 7 V
Input voltage range, any input	−1.5 to 7 V
Continuous power dissipation	1 W
Operating free-air temperature range	0°C to 70°C
Storage temperature range	−65°C to 150°C

NOTE 1: All voltage values are with respect to GND.

recommended operating conditions

PARAMETER	MIN	NOM	MAX	UNIT
Supply voltage, V_{CC}	4.5	5	5.5	V
High-level input voltage, V_{IH}	2		6	V
Low-level input voltage, V_{IL} (See Note 2)	−1		0.8	V
Operating free-air temperature, T_A	0		70	°C

NOTE 2: The algebraic convention, where the more negative (less positive) limit is designated as minimum, is used in this data sheet for logic voltage levels only.

electrical characteristics over recommended operating free-air temperature range (unless otherwise noted)

PARAMETER		TEST CONDITIONS	TMS2150-3			TMS2150-4 TMS2150-5			UNIT
			MIN	TYP	MAX	MIN	TYP	MAX	
$V_{OH(M)}$	MATCH high-level output voltage	I_{OH} = −2 mA, V_{CC} = 4.5 V	2.4			2.4			V
		I_{OH} = −20 µA, V_{CC} = 4.5 V	3.5			3.5			
$V_{OL(M)}$	MATCH low-level output voltage	I_{OL} = 4 mA, V_{CC} = 4.5 V			0.4			0.4	V
$V_{OL(PE)}$	$\overline{PE}$ low-level output voltage	I_{OL} = 12 mA, V_{CC} = 4.5 V			0.4			0.4	V
I_I	Input current	V_I = 0 V to 5.5 V			10			10	µA
$I_{OL(PE)}$	$\overline{PE}$ output sink current	V_{OL} = 0.4 V, V_{CC} = 4.5 V	12			12			mA
I_{OS}	Short-circuit MATCH output current	V_O = GND, V_{CC} = 5.5 V			−150			−150	mA
I_{CC1}	Supply current (operative)	$\overline{RESET}$ = V_{IH}			145			135	mA
I_{CC2}	Suply current (reset)	$\overline{RESET}$ = V_{IL}			155			145	mA
C_i	Input capacitance	V_I = 0 V, f = 1 MHz			5			5	pF
C_o	Output capacitance	V_O = 0 V, f = 1 MHz			6			6	pF

switching characteristics over recommended ranges of supply voltage and operating free-air temperature

PARAMETER		TMS2150-3		TMS2150-4		TMS2150-5		UNIT
		MIN	MAX	MIN	MAX	MIN	MAX	
$t_{a(A)}$	Access time from address to MATCH		35		45		55	ns
$t_{a(A\text{-}P)}$	Access time from address to $\overline{\text{PE}}$		45		55		65	ns
$t_{a(S)}$	Access time from $\overline{\text{S}}$ to MATCH		20		25		35	ns
$t_{p(D)}$	Propagation time, data inputs to MATCH		20		35		45	ns
$t_{p(R\text{-}MH)}$	Propagation time, $\overline{\text{RESET}}$ low to MATCH high		30		30		40	ns
$t_{p(S\text{-}MH)}$	Propagation time, $\overline{\text{S}}$ high to MATCH high		20		25		35	ns
$t_{p(W\text{-}MH)}$	Propagation time, $\overline{\text{W}}$ low to MATCH high		20		25		35	ns
$t_{p(W\text{-}PH)}$	Propagation time, $\overline{\text{W}}$ low to $\overline{\text{PE}}$ high		20		25		35	ns
$t_{v(A)}$	MATCH valid time after change of address	5		5		5		ns
$t_{v(A\text{-}P)}$	$\overline{\text{PE}}$ valid time after change of address	15		15		15		ns

timing requirements over recommended ranges of supply voltage and operating free-air temperature

PARAMETER		TMS2150-3		TMS2150-4		TMS2150-5		UNIT
		MIN	MAX	MIN	MAX	MIN	MAX	
$t_{c(W)}$	Write cycle time, without writing $\overline{\text{PE}}$	30		40		50		ns
$t_{cPE(W)}$	Write cycle time, writing $\overline{\text{PE}}$ (see Note 3)	35		40		50		ns
$t_{c(rd)}$	Read cycle time	35		45		55		ns
$t_{w(RL)}$	Pulse duration, $\overline{\text{RESET}}$ low	35		35		45		ns
$t_{w(WL)}$	Pulse duration, $\overline{\text{W}}$ low, without writing $\overline{\text{PE}}$	20		25		30		ns
$t_{wPE(WL)}$	Pulse duration, $\overline{\text{W}}$ low, writing $\overline{\text{PE}}$ (see Note 3)	35		40		45		ns
$t_{su(A)}$	Address setup time before $\overline{\text{W}}$ low	0		0		0		ns
$t_{su(D)}$	Data setup time before $\overline{\text{W}}$ high	20		25		30		ns
$t_{su(P)}$	$\overline{\text{PE}}$ setup time before $\overline{\text{W}}$ high (see Note 3)	20		25		30		ns
$t_{su(S)}$	Chip select setup time before $\overline{\text{W}}$ high	20		25		30		ns
$t_{su(RH)}$	$\overline{\text{RESET}}$ inactive setup time before first tag cycle	0		0		0		ns
$t_{h(A)}$	Address hold time after $\overline{\text{W}}$ high	0		0		5		ns
$t_{h(D)}$	Data hold time after $\overline{\text{W}}$ high	5		5		10		ns
$t_{h(P)}$	$\overline{\text{PE}}$ hold time after $\overline{\text{W}}$ high	0		0		5		ns
$t_{h(S)}$	Chip select hold time after $\overline{\text{W}}$ high	0		0		0		ns
t_{AVWH}	Address valid to write enable high	30		40		50		ns

NOTE 3: Parameters $t_{wPE(WL)}$ and $t_{su(P)}$ apply only during the write cycle time when writing a parity error, $t_{cPE(W)}$.

ac test conditions

Input pulse levels	GND to 3 V
Input rise and fall times	5 ns
Input timing reference levels	1.5 V
Output timing reference level	1.5 V
Output loading	See Figures 1 and 2

TMS4500A
DYNAMIC RAM CONTROLLER

JANUARY 1982—REVISED APRIL 1985

- Control Operation of 8K/16K/32K/64K Dynamic RAMs
- Creates Static RAM Appearance
- One Package Contains Address Multiplexer, Refresh Control, and Timing Control
- Directly Addresses and Drives Up to 256K Bytes of Memory Without External Drivers
- Operates from Microprocessor Clock
  - — No Crystals, Delay Lines, or RC Networks
  - — Eliminates Arbitration Delays
- Refresh May Be Internally or Externally Initiated
- Versatile
  - — Strap-Selected Refresh Rate
  - — Synchronous, Predictable Refresh
  - — Selection of Distributed, Transparent, and Cycle-Steal Refresh Modes
  - — Interfaces Easily to Popular Microprocessors
- Strap-Selected Wait State Generation for Microprocessor/Memory Speed Matching
- Ability to Synchronize or Interleave Controller with the Microprocessor System (including Multiple Controllers)
- Three-State Outputs Allow Multiport Memory Configuration
- Performance Ranges of 150, 200, or 250 ns

TMS4500A . . . NL PACKAGE
(TOP VIEW)

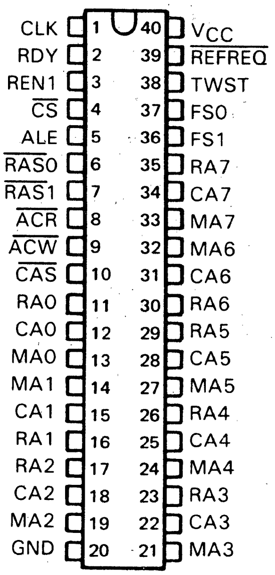
CLK 1
RDY 2
REN1 3
CS 4
ALE 5
RAS0 6
RAS1 7
ACR 8
ACW 9
CAS 10
RA0 11
CA0 12
MA0 13
MA1 14
CA1 15
RA1 16
RA2 17
CA2 18
MA2 19
GND 20
21 MA3
22 CA3
23 RA3
24 MA4
25 CA4
26 RA4
27 MA5
28 CA5
29 RA5
30 RA6
31 CA6
32 MA6
33 MA7
34 CA7
35 RA7
36 FS1
37 FS0
38 TWST
39 REFREQ
40 VCC

TMS4500A . . . FN PACKAGE
(TOP VIEW)

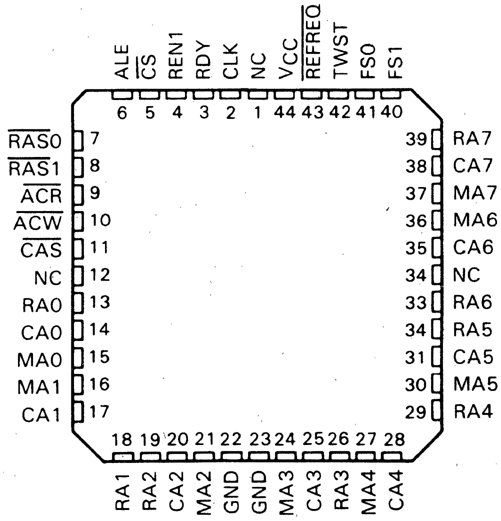
ALE 6
CS 5
REN1 4
RDY 3
CLK 2
NC 1
VCC 44
REFREQ 43
TWST 42
FS0 41
FS1 40
RAS0 7
RAS1 8
ACR 9
ACW 10
CAS 11
NC 12
RA0 13
CA0 14
MA0 15
MA1 16
CA1 17
39 RA7
38 CA7
37 MA7
36 MA6
35 CA6
34 NC
33 RA6
34 RA5
31 CA5
30 MA5
29 RA4
RA1 18
RA2 19
CA2 20
MA2 21
GND 22
GND 23
MA3 24
CA3 25
RA3 26
MA4 27
CA4 28

description

The TMS4500A is a monolithic DRAM system controller designed to provide address multiplexing, timing, control and refresh/access arbitration functions to simplify the interface of dynamic RAMs to microprocessor systems.

The controller contains a 16-bit multiplexer that generates the address lines for the memory device from the 16 system address bits and provides the strobe signals required by the memory to decode the address. An 8-bit refresh counter generates the 256-row addresses required for refresh.

A refresh timer is provided that generates the necessary timing to refresh the dynamic memories and assure data retention.

The TMS4500A also contains refresh/access arbitration circuitry to resolve conflicts between memory access requests and memory refresh cycles. The TMS4500A is offered in a 40-pin, 600-mil dual-in-line plastic package and 44-pin, 650-mil square plastic chip carrier package. It is guaranteed for operation from 0 °C to 70 °C.

Copyright © 1983, Texas Instruments Incorporated

TEXAS INSTRUMENTS
POST OFFICE BOX 225012 • DALLAS, TEXAS 75265

BLOCK DIAGRAM

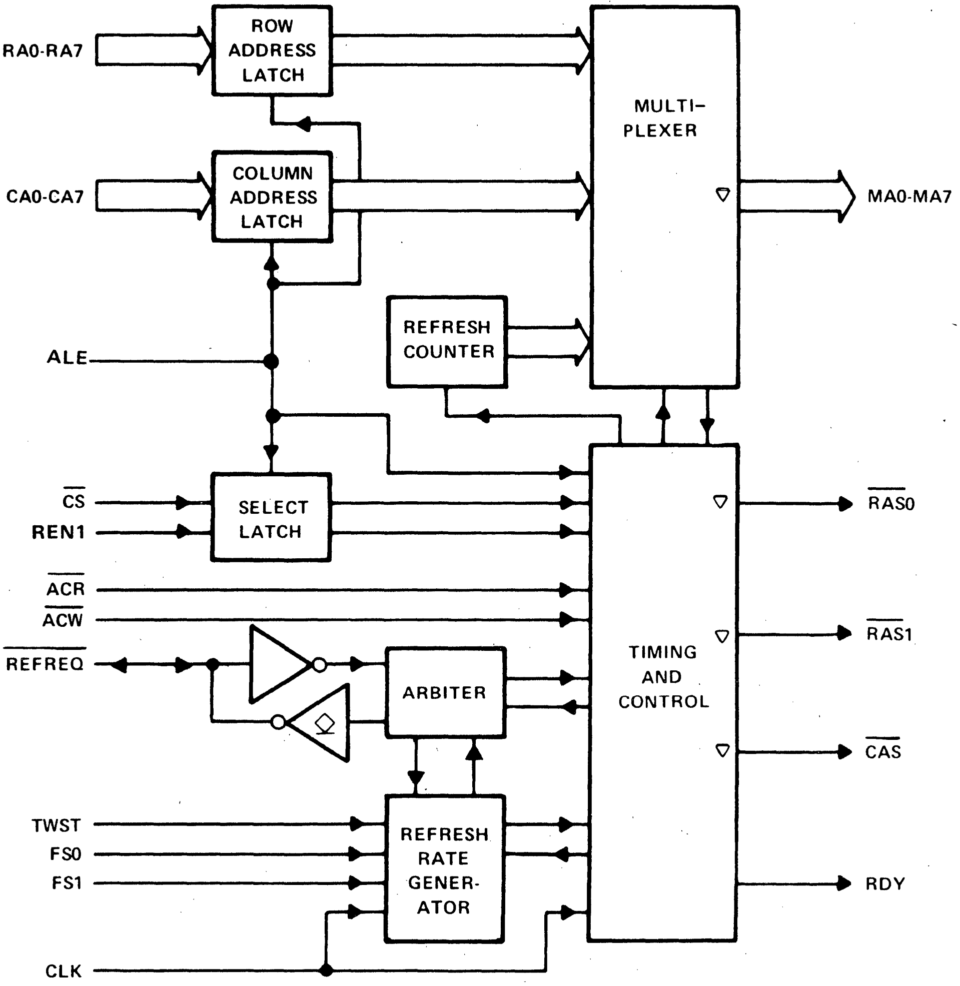
RA0-RA7
ROW ADDRESS LATCH
CA0-CA7
COLUMN ADDRESS LATCH
MULTI-PLEXER
MA0-MA7
REFRESH COUNTER
ALE
$\overline{CS}$
REN1
SELECT LATCH
$\overline{ACR}$
$\overline{ACW}$
$\overline{REFREQ}$
ARBITER
TIMING AND CONTROL
$\overline{RAS0}$
$\overline{RAS1}$
$\overline{CAS}$
RDY
TWST
FS0
FS1
REFRESH RATE GENER-ATOR
CLK

pin descriptions

RA0 - RA7	Input	Row Address — These address inputs are used to generate the row address for the multiplexer.
CA0 - CA7	Input	Column Address — These address inputs are used to generate the column address for the multiplexer.
MA0 - MA7	Output	Memory Address — These three-state outputs are designed to drive the addresses of the dynamic RAM array.
ALE	Input	Address Latch Enable — This input is used to latch the 16 address inputs, $\overline{CS}$ and REN1. This also initiates an access cycle if chip select is valid. The rising edge (low level to high level) of ALE returns $\overline{RAS}$ to the high level.

pin descriptions (continued)

$\overline{\text{CS}}$	Input	Chip Select — A low on this input enables an access cycle. The trailing edge of ALE latches the chip select input.
REN1	Input	RAS Enable 1 — This input is used to select one of two banks of RAM via the $\overline{\text{RAS0}}$ and $\overline{\text{RAS1}}$ outputs when chip select is present. When it is low, $\overline{\text{RAS0}}$ is selected; when it is high, $\overline{\text{RAS1}}$ is selected.
$\overline{\text{ACR}}$, $\overline{\text{ACW}}$	Input	Access Control, Read; Access Control, Write — A low on either of these inputs causes the column address to appear on MA0 - MA7 and the column address strobe. The rising edge of $\overline{\text{ACR}}$ or $\overline{\text{ACW}}$ terminates the cycle by ending $\overline{\text{RAS}}$ and $\overline{\text{CAS}}$ strobes. When $\overline{\text{ACR}}$ and $\overline{\text{ACW}}$ are both low, MA0 - MA7, $\overline{\text{RAS0}}$, $\overline{\text{RAS1}}$, and $\overline{\text{CAS}}$ go into a high-impedance (floating) state.
CLK	Input	System Clock — This input provides the master timing to generate refresh cycle timings and refresh rate. Refresh rate is determined by the TWST, FS1, FS0 inputs.
$\overline{\text{REFREQ}}$	Input/Output	Refresh Request — (This input should be driven by an open-collector output.) On input, a low-going edge initiates a refresh cycle and will cause the internal refresh timer to be reset on the next falling edge of the CLK. As an output, a low-going edge signals an internal refresh request and that the refresh timer will be reset on the next low-going edge of CLK. $\overline{\text{REFREQ}}$ will remain low until the refresh cycle is in progress and the current refresh address is present on MA0-MA7. (Note: $\overline{\text{REFREQ}}$ contains an internal pull-up resistor with a nominal resistance of 10 kilohms.)
$\overline{\text{RAS0}}$, $\overline{\text{RAS1}}$	Output	Row Address Strobe — These three-state outputs are used to latch the row address into the bank of DRAMs selected by REN1. On refresh both signals are driven.
$\overline{\text{CAS}}$	Output	Column Address Strobe — This three-state output is used to latch the column address into the DRAM array.
RDY	Output	Ready — This totem-pole output synchronizes memories that are too slow to guarantee microprocessor access time requirements. This output is also used to inhibit access cycles during refresh when in cycle-steal mode.
TWST	Input	Timing/Wait Strap — A high on this input indicates a wait state should be added to each memory cycle. In addition it is used in conjunction with FS0 and FS1 to determine refresh rate and timing.
FS0, FS1	Input	Frequency Select 0; Frequency Select 1 — These are strap inputs to select Mode and Frequency of operation as shown in Table 1.

TABLE 1 – STRAP CONFIGURATION

STRAP INPUT MODES			WAIT STATES FOR MEMORY ACCESS	REFRESH RATE	MINIMUM CLK FREQ. (MHz)	REFRESH FREQ. (kHz)	CLOCK CYCLES FOR EACH REFRESH
TWST	FS1	FS0					
L	L	L[†]	0	EXTERNAL	–	REFREQ	4
L	L	H	0	CLK ÷ 31	1.984	64 - 95[‡]	3
L	H	L	0	CLK ÷ 46	2.944	64 - 85[‡]	3
L	H	H	0	CLK ÷ 61	3.904	64 - 82[§]	4
H	L	L	1	CLK ÷ 46	2.944	64 - 85[‡]	3
H	L	H	1	CLK ÷ 61	3.904	64 - 80[‡]	4
H	H	L	1	CLK ÷ 76	4.864	64 - 77[‡]	4
H	H	H	1	CLK ÷ 91	5.824	64 - 88[¶]	4

[†] This strap configuration resets the Refresh Timer circuitry.

[‡] Upper figure in refresh frequency is the frequency that is produced if the minimum CLK frequency of the next select state is used.

[§] Refresh frequency if CLK frequency is 5 MHz.

[¶] Refresh frequency if CLK frequency is 8 MHz.

functional description

TMS4500A consists of six basic blocks; address and select latches, refresh rate generator, refresh counter, the multiplexer, the arbiter, and the timing and control block.

address and select latches

The address and select latches allow the DRAM controller to be used in systems that multiplex address and data on the same lines without external latches. The row address latches are transparent, meaning that while ALE is high, the output at MA0 - MA7 follows the inputs RA0 - RA7.

refresh rate generator

The refresh rate generator is a counter that indicates to the arbiter that it is time for a refresh cycle. The counter divides the clock frequency according to the configuration straps as shown in Table 1. The counter is reset when a refresh cycle is requested or when TWST, FS1 and FS0 are low. The configuration straps allow the matching of memories to the system access time.

Upon Power-Up it is necessary to provide a reset signal by driving all three straps to the controller low to initialize internal counters. A system's low-active, power-on reset ($\overline{\text{RESET}}$) can be used to accomplish this by connecting it to those straps that are desired high during operation. During this reset period, at least four clock cycles should occur.

refresh counter

The refresh counter contains the address of the row to be refreshed. The counter is decremented after each refresh cycle. [A low-to-high transition on TWST sets the refresh counter to FF_{16} (255_{10}).]

multiplexer

The multiplexer provides the DRAM array with row, column, and refresh addresses at the proper times. Its inputs are the address latches and the refresh counter. The outputs provide up to 16 multiplexed addresses on eight lines.

arbiter

The arbiter provides two operational cycles: access and refresh. The arbiter resolves conflicts between cycle requests and cycles in execution, and schedules the inhibited cycle when used in cycle-steal mode.

timing and control block

The timing and control block executes the operational cycle at the request of the arbiter. It provides the DRAM array with $\overline{RAS}$ and $\overline{CAS}$ signals. It provides the CPU with a RDY signal. It controls the multiplexer during all cycles. It resets the refresh rate generator and decrements the refresh counter during refresh cycles.

absolute maximum ratings over operating free-air temperature range (unless otherwise noted)[†]

Supply voltage range, V_{CC} (see Note 1)	−1.5 to 7 V
Input voltage range (any input)	−1.5 V to 7 V
Continuous power dissipation	1.2 W
Operating free-air temperature range	0°C to 70°C
Storage temperature range	−65°C to 150°C

[†] Stresses beyond those listed under "Absolute Maximum Ratings" may cause permanent damage to the device. This is stress rating only and functional operation of the device at these or any other conditions beyond those indicated in the "Recommended Operating Conditions" section of this specification is not implied. Exposure to absolute maximum-rated conditions for extended periods may affect device reliability.

NOTE 1: Voltage values are with respect to the ground terminal.

recommended operating conditions

PARAMETER	MIN	NOM	MAX	UNIT
Supply voltage, V_{CC}	4.5	5	5.5	V
High-level input voltage, V_{IH}	2.4		6	V
Low-level input voltage, V_{IL}	−1[‡]		0.8	V
High-level output current, I_{OH}			−1	mA
Low-level output current, I_{OL}			4	mA
Short-circuit output current, I_{OS}[§]			−50	mA
Operating free-air temperature, T_A	0		70	°C

[‡] The algebraic convention, where the less-positive (more-negative) limit is designated as minimum, is used in this data sheet for logic voltage levels only.

[§] Not more than one output should be shorted at a time.

electrical characteristics over recommended operating free-air temperature range (unless otherwise noted)

PARAMETER			TEST CONDITIONS		MIN	TYP[¶]	MAX	UNIT
V_{OH}	High-level output voltage	MA0-MA7, RDY	I_{OH} = −1 mA	V_{CC} = 4.5 V	2.4			V
		$\overline{RAS0}$, $\overline{RAS1}$, $\overline{CAS}$			2.7			
		$\overline{REFREQ}$	I_{OH} = −100 μA	V_{CC} = 4.5 V	2.4			
V_{OL}	Low-level output voltage		I_{OL} = 4 mA	V_{CC} = 4.5 V			0.4	V
I_{IH}	High-level input current except $\overline{REFREQ}$		V_I = 5.5 V				10	μA
I_{IL}	Low-level input current	$\overline{REFREQ}$	V_I = 0 V				−1.25	mA
		All others					−10	μA
I_{OZ}	Off-state output current		V_O = 0 to 4.5 V	V_{CC} = 5.5 V			±50	μA
I_{CC}	Operating supply current		T_A = 0°C			100	140	mA
C_i	Input capacitance		V_I = 0 V,	f = 1 MHz		5		pF
C_o	Output capacitance		V_O = 0 V,	f = 1 MHz		6		pF

[¶] All typical values are at V_{CC} = 5 V, T_A = 25°C.

timing requirements over recommended supply voltage range and operating free-air temperature range

PARAMETER		TMS4500A-15		TMS4500A-20		TMS4500A-25		UNIT
		MIN	MAX	MIN	MAX	MIN	MAX	
$t_{c(C)}$	CLK cycle time	100		120		140		ns
$t_{w(CH)}$	CLK high pulse width	40		40		40		
$t_{w(CL)}$	CLK low pulse width	40		45		45		
t_t	Transition time, all inputs		50		50		50	
$t_{AEL\text{-}CL}$	Time delay, ALE low to CLK starting low (see Note 1)	10		10		15		
$t_{CL\text{-}AEL}$	Time delay, CLK low to ALE starting low (see Note 1)	10		10		15		
$t_{CL\text{-}AEH}$	Time delay, CLK low to ALE starting high (see Note 2)	15		20		20		
$t_{w(AEH)}$	Pulse width ALE high	50		60		60		
$t_{AV\text{-}AEL}$	Time delay, address, REN1, $\overline{\text{CS}}$ valid to ALE low	5		10		15		
$t_{AEL\text{-}AX}$	Time delay, ALE low to address not valid	10		10		10		
$t_{AEL\text{-}ACL}$	Time delay, ALE low to $\overline{\text{ACX}}$ low (see Notes 3,4,5, and 6)	$t_{h(RA)} + 30$		$t_{h(RA)} + 40$		$t_{h(RA)} + 50$		
$t_{ACH\text{-}CL}$	Time delay, $\overline{\text{ACX}}$ high to CLK low (see Notes 3 and 7)	20		20		20		
$t_{ACL\text{-}CH}$	Time delay, $\overline{\text{ACX}}$ low to CLK starting high (to remove RDY)	30		30		30		
$t_{RQL\text{-}CL}$	Time delay, $\overline{\text{REFREQ}}$ low to CLK starting low (see Note 8)	20		20		20		
$t_{w(RQL)}$	Pulse width, $\overline{\text{REFREQ}}$ low	20		20		20		
$t_{w(ACL)}$	$\overline{\text{ACX}}$ low width (see Note 9)	110		140		175		

NOTES:
1. Coincidence of the trailing edge of CLK and the trailing edge of ALE should be avoided, as the refresh/access occurs on the trailing CLK edge. A trailing edge of CLK should occur during the interval from $\overline{\text{ACX}}$ high to ALE low.
2. If ALE rises before $\overline{\text{ACX}}$ and a refresh request is present, the falling edge of CLK after $t_{CL\text{-}AEH}$ will output the refresh address to MA0-MA7 and initiate a refresh cycle.
3. These specifications relate to system timing and do not directly reflect device performance.
4. On the access grant cycle following refresh, the occurrence of $\overline{\text{CAS}}$ low depends on the relative occurrence of ALE low to $\overline{\text{ACX}}$ low. If $\overline{\text{ACX}}$ occurs prior to or coincident with ALE then $\overline{\text{CAS}}$ is timed from the CLK high transition that causes $\overline{\text{RAS}}$ low. If $\overline{\text{ACX}}$ occurs 20 ns or more after ALE then $\overline{\text{CAS}}$ is timed from the CLK low transition following the CLK high transition causing $\overline{\text{RAS}}$ low.
5. For maximum speed access (internal delays on both access and access grant cycles), $\overline{\text{ACX}}$ should occur prior to or coincident with ALE.
6. $t_{h(RA)}$ is the dynamic memory row address hold time. $\overline{\text{ACX}}$ should follow ALE by $t_{AEL\text{-}CEL}$ in systems where the required $t_{h(RA)}$ is greater than $t_{REL\text{-}MAX}$ minimum.
7. Minimum of 20 ns is specified to ensure arbitration will occur on falling CLK edge. $t_{ACH\text{-}CL}$ also affects precharge time such that the minimum $t_{ACH\text{-}CL}$ should be equal or greater than: $t_{w(RH)} - t_{w(CL)} + 30$ ns (for cycle where $\overline{\text{ACX}}$ high occurs prior to ALE high) where $t_{w(RH)}$ is the DRAM $\overline{\text{RAS}}$ precharge time.
8. This parameter is necessary only if refresh arbitration is to occur on this low-going CLK edge (in systems where refresh is synchronized to external events).
9. The specification of $t_{w(ACL)}$ is designed to allow a CAS pulse. This assures normal operation of the device in testing and system operation.

switching characteristics over recommended supply voltage range and operating free-air temperature range (see Figure 1)

PARAMETER		TEST CONDITIONS	TMS4500A-15		TMS4500A-20		TMS4500A-25		UNIT
			MIN	MAX	MIN	MAX	MIN	MAX	
$t_{AEL\text{-}REL}$	Time delay, ALE low to $\overline{\text{RAS}}$ starting low	C_L = 160 pF		35		40		50	ns
$t_{RAV\text{-}MAV}$	Time delay, row address valid to memory address valid			45		50		60	
$t_{AEH\text{-}MAV}$	Time delay, ALE high to valid memory address			65		75		90	
$t_{AEL\text{-}RYL}$	Time delay, ALE to RDY starting low (TWST = 1 or refresh in progress)	C_L = 40 pF		40		40		40	
$t_{AEL\text{-}CEL}$	Time delay, ALE low to $\overline{\text{CAS}}$ starting low (see Note 10)	C_L = 160 pF	60	150	70	200	80	250	
$t_{AEH\text{-}REH}$	Time delay, ALE high to $\overline{\text{RAS}}$ starting high			30		30		40	
$t_{ACL\text{-}MAX}$	Row address valid after $\overline{\text{ACX}}$ low		15		20		25		
$t_{MAV\text{-}CEL}$	Time delay, memory address valid to $\overline{\text{CAS}}$ starting low		0		0		0		
$t_{ACL\text{-}CEL}$	Time delay, $\overline{\text{ACX}}$ low to $\overline{\text{CAS}}$ starting low (see Note 10)		40	100	45	130	50	165	
$t_{ACH\text{-}REH}$	Time delay, $\overline{\text{ACX}}$ to $\overline{\text{RAS}}$ starting high			30		40		50	
$t_{ACH\text{-}CEH}$	Time delay, $\overline{\text{ACX}}$ high to $\overline{\text{CAS}}$ starting high		5	30	10	40	15	50	
$t_{ACH\text{-}MAX}$	Column address valid after $\overline{\text{ACX}}$ high		10		15		15		
$t_{CH\text{-}RYH}$	Time delay, CLK high to RDY starting high (after $\overline{\text{ACX}}$ low) (see Note 11)	C_L = 40 pF		40		45		60	
$t_{RFL\text{-}RFL}$	Time delay, $\overline{\text{REFREQ}}$ external till supported by $\overline{\text{REFREQ}}$ internal			30		35		35	
$t_{CH\text{-}RFL}$	Time delay, CLK high till $\overline{\text{REFREQ}}$ internal starting low			30		35		45	
$t_{CL\text{-}MAV}$	Time delay, CLK low till refresh address valid	C_L = 160 pF		75		100		125	
$t_{CH\text{-}RRL}$	Time delay, CLK high till refresh $\overline{\text{RAS}}$ starting low		10	50	15	60	20	80	
$t_{MAV\text{-}RRL}$	Time delay, refresh address valid tili refresh $\overline{\text{RAS}}$ low		5		5		5		
$t_{CL\text{-}RFH}$	Time delay, CLK low to $\overline{\text{REFREQ}}$ starting high (3 cycle refresh)			50		55		75	
$t_{CH\text{-}RFH}$	Time delay, CLK high to $\overline{\text{REFREQ}}$ starting high (4 cycle refresh)			50		55		75	
$t_{CH\text{-}RRH}$	Time delay, CLK high to refresh $\overline{\text{RAS}}$ starting high		5	35	10	45	10	60	
$t_{CH\text{-}MAX}$	Refresh address valid after CLK high		15		20		25		

NOTES: 10. The falling edge of $\overline{\text{CAS}}$ occurs when both ALE low to $\overline{\text{CAS}}$ low time delay ($t_{AEL\text{-}CEL}$) and $\overline{\text{ACX}}$ low to $\overline{\text{CAS}}$ low time delay ($t_{ACL\text{-}CEL}$) have elapsed, i.e., if $\overline{\text{ACX}}$ goes low prior to($t_{AEL\text{-}CEL} - t_{ACL\text{-}CEL}$)after the falling edge of ALE, the falling edge of $\overline{\text{CAS}}$ is measured from the falling edge of ALE ($t_{AEL\text{-}CEL}$). Otherwise, the access time increases and the falling edge of $\overline{\text{CAS}}$ is measured from the falling edge of $\overline{\text{ACX}}$ ($t_{ACL\text{-}CEL}$).

11. RDY returns high on the rising edge of CLK. If TWST = 0, then on an access grant cycle RDY goes high on the same edge that causes access $\overline{\text{RAS}}$ low. If TWST = 1, then RDY goes to the high level on the first rising CLK edge after $\overline{\text{ACX}}$ goes low on access cycles and on the next rising edge after the edge that causes access $\overline{\text{RAS}}$ low on access grant cycles (assuming $\overline{\text{ACX}}$ low).

switching characteristics over recommended supply voltage range and operating free-air temperature range (see Figure 1) (continued)

PARAMETER		TEST CONDITIONS	TMS4500A-15		TMS4500A-20		TMS4500A-25		UNIT
			MIN	MAX	MIN	MAX	MIN	MAX	
$t_{CH\text{-}REL}$	Time delay, CLK high till access $\overline{\text{RAS}}$ starting low	C_L = 160 pF		60		70		95	ns
$t_{CL\text{-}CEL}$	Time delay, CLK low to access $\overline{\text{CAS}}$ starting low (see Note 12)			125		140		185	
$t_{CL\text{-}MAX}$	Row address valid after CLK low		25		30		40		
$t_{REL\text{-}MAX}$	Row address valid after $\overline{\text{RAS}}$ low		25		30		35		
$t_{AEH\text{-}MAX}$	Column address valid after ALE high	C_L = 160 pF	10		15		20		
t_{dis}	Output disable time (3-state outputs)			100		125		165	
t_{en}	Output enable time (3-state outputs)			75		80		105	
$t_{CAV\text{-}CEL}$	Time delay, column address valid to $\overline{\text{CAS}}$ starting low after refresh		0		0		0		
$t_{CH\text{-}CEL}$	Time delay, CLK high to access $\overline{\text{CAS}}$ starting low (see Note 12)			180		200		235	
$t_{ACL\text{-}CL}$	$\overline{\text{ACX}}$ low to CLK starting low	C_L = 40 pF	25		35		45		
$t_{ACL\text{-}RYH}$	$\overline{\text{ACX}}$ low to RDY starting high	C_L = 40 pF		40		50		60	
$t_{CL\text{-}ACL}$	CLK low to $\overline{\text{ACX}}$ starting low	C_L = 40 pF	0		0		0		
$t_{t(CEL)}$	$\overline{\text{CAS}}$ fall time	C_L = 320 pF		15		20		25	
$t_{t(CEH)}$	$\overline{\text{CAS}}$ rise time			30		35		45	
$t_{t(REL)}$	$\overline{\text{RAS}}$ fall time	C_L = 160 pF		15		20		25	
$t_{t(REH)}$	$\overline{\text{RAS}}$ rise time			15		20		25	
$t_{t(MAV)}$	Address transition time			20		20		25	
$t_{t(RYL)}$	RDY fall time	C_L = 40 pF		10		15		20	
$t_{t(RYH)}$	RDY rise time			20		25		35	

NOTE 12: On the access grant cycle following refresh, the occurrence of $\overline{\text{CAS}}$ low depends on the relative occurrence of ALE low to $\overline{\text{ACX}}$ low. If $\overline{\text{ACX}}$ occurs prior to or coincident with ALE then $\overline{\text{CAS}}$ is timed from the CLK high transition that causes $\overline{\text{RAS}}$ low. If $\overline{\text{ACX}}$ occurs 20 ns or more after ALE then $\overline{\text{CAS}}$ is timed from the CLK low transition following the CLK high transition causing $\overline{\text{RAS}}$ low. (See Refresh Cycle Timing Diagram)

PARAMETER MEASUREMENT INFORMATION

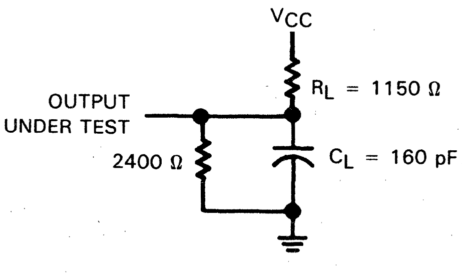

FIGURE 1 – LOAD CIRCUIT

THCT1010-160M, THCT1010-140E, THCT1010-100
16-BIT BY 16-BIT MULTIPLIERS/ACCUMULATORS

D2834, SEPTEMBER 1984—REVISED SEPTEMBER 1985

- 16-Bit by 16-Bit Parallel Multiplication/Accumulation
- 35-Bit-Wide Accumulator
- Inputs are TTL-Voltage Compatible
- Outputs Capable of Driving up to 10 LSTTL Loads
- Single 5-V Power Supply
- Low Power Dissipation . . . 150 mW Typical
- Pin-for-Pin Compatible with TRW TDC1010J (DIP only) and AM29510 (DIP only)
- High-Speed Twin-Well CMOS Process
- Package Options Include Ceramic and Plastic Chip Carriers and DIPs
- Dependable Texas Instruments Quality and Reliability

description

The THCT1010 is a TTL-voltage-compatible, low-power, high-speed 16-bit by 16-bit multiplier/accumulator for digital signal processing, digital filters, fast Fourier transformations, array processing, and microprocessor throughput enhancement. These devices are pin-for-pin equivalent to the TRW TDC1010J but dissipate 20 times less power. The lower power dissipation causes the differences between junction and ambient temperatures to be minimized and, therefore, eliminates the heat-sink requirements and increases reliability. High speed is achieved by using a modified Booth algorithm, a feed-forward carry circuit, and a conditional sum adder that enhances the final adder stage of the multiplier.

The THCT1010 inputs consist of three registers, a 16-bit X input, a 16-bit Y input, and an input control register. The 35-bit output product register consists of a 16-bit most-significant-product (MSP) bus, a 16-bit least-significant-product (LSP) bus that is shared with the 16-bit Y input bus, and a 3-bit extended-product (XTP) bus (PR32 through PR34); see the functional block diagram. The input registers are

JD OR N DUAL-IN-LINE PACKAGE

(TOP VIEW)

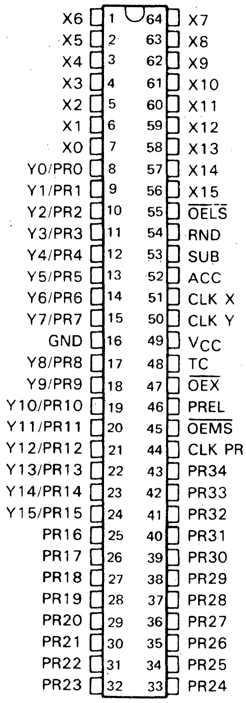
X6 1 64 X7
X5 2 63 X8
X4 3 62 X9
X3 4 61 X10
X2 5 60 X11
X1 6 59 X12
X0 7 58 X13
Y0/PR0 8 57 X14
Y1/PR1 9 56 X15
Y2/PR2 10 55 OELS
Y3/PR3 11 54 RND
Y4/PR4 12 53 SUB
Y5/PR5 13 52 ACC
Y6/PR6 14 51 CLK X
Y7/PR7 15 50 CLK Y
GND 16 49 VCC
Y8/PR8 17 48 TC
Y9/PR9 18 47 OEX
Y10/PR10 19 46 PREL
Y11/PR11 20 45 OEMS
Y12/PR12 21 44 CLK PR
Y13/PR13 22 43 PR34
Y14/PR14 23 42 PR33
Y15/PR15 24 41 PR32
PR16 25 40 PR31
PR17 26 39 PR30
PR18 27 38 PR29
PR19 28 37 PR28
PR20 29 36 PR27
PR21 30 35 PR26
PR22 31 34 PR25
PR23 32 33 PR24

FK OR FN CHIP-CARRIER PACKAGE

(TOP VIEW)

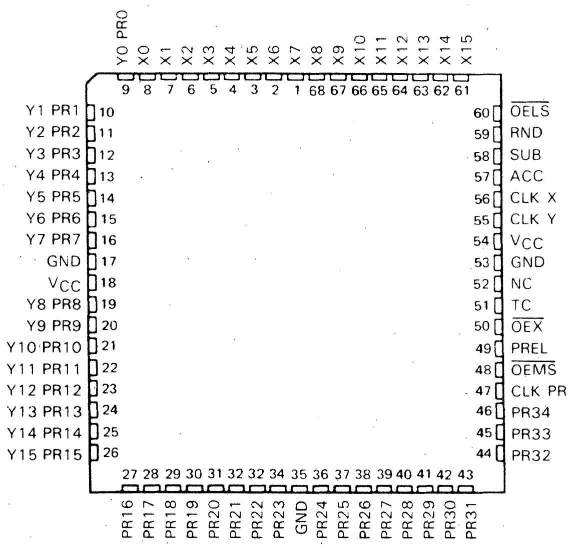
Y0 PR0 X0 X1 X2 X3 X4 X5 X6 X7 X8 X9 X10 X11 X12 X13 X14 X15
9 8 7 6 5 4 3 2 1 68 67 66 65 64 63 62 61
Y1 PR1 10
Y2 PR2 11
Y3 PR3 12
Y4 PR4 13
Y5 PR5 14
Y6 PR6 15
Y7 PR7 16
GND 17
VCC 18
Y8 PR8 19
Y9 PR9 20
Y10 PR10 21
Y11 PR11 22
Y12 PR12 23
Y13 PR13 24
Y14 PR14 25
Y15 PR15 26
60 OELS
59 RND
58 SUB
57 ACC
56 CLK X
55 CLK Y
54 VCC
53 GND
52 NC
51 TC
50 OEX
49 PREL
48 OEMS
47 CLK PR
46 PR34
45 PR33
44 PR32
27 28 29 30 31 32 32 34 35 36 37 38 39 40 41 42 43
PR16 PR17 PR18 PR19 PR20 PR21 PR22 PR23 GND PR24 PR25 PR26 PR27 PR28 PR29 PR30 PR31

NC—No internal connection

Caution. These devices have limited built-in gate protection. The leads should be shorted together or the device placed in conductive foam during storage or handling to prevent electrostatic damage to the MOS gates.

PRODUCTION DATA documents contain information current as of publication date. Products conform to specifications per the terms of Texas Instruments standard warranty. Production processing does not necessarily include testing of all parameters.

Copyright © 1984, Texas Instruments Incorporated

TEXAS INSTRUMENTS
POST OFFICE BOX 225012 • DALLAS, TEXAS 75265

independently controlled by CLK X and CLK Y, and the product registers are D-type positive-edge-triggered flip-flops. Separate three-state output enables are provided for each output product register. These, in combination with the independent input clocks, allow operation on a microprocessor bus.

The THCT1010 has a round control (RND) that rounds the product to the 19 most significant bits. The preload control (PREL) is used in conjunction with the output enables to initialize the contents of the output registers. The THCT1010 will perform multiplication and addition, multiplication and subtraction, or straight multiplication depending upon the states of the accumulate control (ACC) and subtractor control (SUB). The TC control provides the capability of formatting the input data to be either two's complement or unsigned magnitude.

The THCT1010-160M is characterized for operation over the full military temperature range of −55 °C to 125 °C. The THCT1010-140E is characterized for operation from −40 °C to 85 °C. The THCT1010-100 is characterized for operation from 0 °C to 70 °C.

PIN		DESCRIPTION
NO.	NAME	
56–64, 1–7	X15 thru X0	X data inputs, X15 is the most-significant bit. The data is loaded into the X register on the rising edge of CLKX.
8–15, 17–24	Y0/PR0 thru Y15/PR15	I/O ports for least significant product (LSP) bits of output product register, input ports for Y data. Y0/PR0 is the least significant bit. The mode is controlled by the PREL and $\overline{\text{OEMS}}$ pins.
25–43	PR16 thru PR34	I/O ports for output product register bits. PR16 through PR31 are the most-significant product (MSP) bits. PR32 through PR34 are the extended product (XTP) bits. The mode is controlled by PREL, $\overline{\text{OELS}}$, $\overline{\text{OEX}}$.
44	CLK PR	Product clock input. On the low-to-high transition, latches the LSP, MSP, and XTP into the output product register.
45	OEMS	Active-low output enable for MSP output product register. When high, causes the PR31 through PR16 outputs to be in the high-impedance state.
46	PREL	Preload control. When high, the output product register's outputs are disabled. When an output enable ($\overline{\text{OELS}}$, $\overline{\text{OEMS}}$, $\overline{\text{OEX}}$) is high, preload data can be entered into the output product register from the PR I/O lines on the rising edge of CLK PR.
47	$\overline{\text{OEX}}$	Active-low output enable for XTP output product register. When high, causes the PR32 through PR34 outputs to be in the high-impedance state.
48	TC	Two's complement control. When TC is high, the input data is in two's complement format. When TC is low, the input data is in unsigned magnitude format. The TC signal is loaded into the control register on the rising edge of CLK X or CLK Y.
50	CLK Y	Y clock input. On the low-to-high transition, clocks data in from the Y inputs.
51	CLK X	X clock input. On the low-to-high transition, clocks data in from the X inputs.
52	ACC	Accumulator control. When ACC is high and SUB is low, the content of the output product register is added to the next product generated. The sum is then placed in the output product register on the rising edge of CLK PR. When ACC is low, the product is stored directly into the output register on the rising edge of CLK PR. The ACC signal is loaded into the control register at the rising edge of CLK X or CLK Y.
53	SUB	Subtraction control. When SUB and ACC are high, the content of the output product register is subtracted from the next product generated. The result is then placed in the output product register on the rising edge of CLK PR. When SUB is low and ACC is high, the addition operation is performed instead of subtraction. When ACC is low, SUB is a "Don't Care". The SUB signal is loaded into the control register on the rising edge of CLK X or CLK Y.
54	RND	Round control. When high, causes the product of the X and Y inputs to be rounded to the 19 most significant bits by adding a 1 to the MSB of the LSP. The RND signal is loaded into the control register on the rising edge of CLK X or CLK Y.
55	$\overline{\text{OELS}}$	Active-low output enable for LSP output product register. When high, causes the PR0 through PR15 outputs to be in the high-impedance state.

Pin numbers shown are for the JD and N packages.

PRELOAD FUNCTION TABLE

PREL	$\overline{\text{OEX}}$	$\overline{\text{OEMS}}$	$\overline{\text{OELS}}$	XTP	MSP	LSP
L	L	L	L	(PR32–PR34)	(PR16–PR31)	(PR0–PR15)
L	L	L	H	(PR32–PR34)	(PR16–PR31)	Z
L	L	H	L	(PR32–PR34)	Z	(PR0–PR15)
L	L	H	H	(PR32–PR34)	Z	Z
L	H	L	L	Z	(PR16–PR31)	(PR0–PR15)
L	H	L	H	Z	(PR16–PR31)	Z
L	H	H	L	Z	Z	(PR0–PR15)
L	H	H	H	Z	Z	Z
H	L	L	L	Z	Z	Z
H	L	L	H	Z	Z	PL
H	L	H	L	Z	PL	Z
H	L	H	H	Z	PL	PL
H	H	L	L	PL	Z	Z
H	H	L	H	PL	Z	PL
H	H	H	L	PL	PL	Z
H	H	H	H	PL	PL	PL

PL = Output buffers at high impedance or output disabled. Preload data supplied externally at output pins will be loaded into the output register on the rising edge of CLK PR.

logic symbol

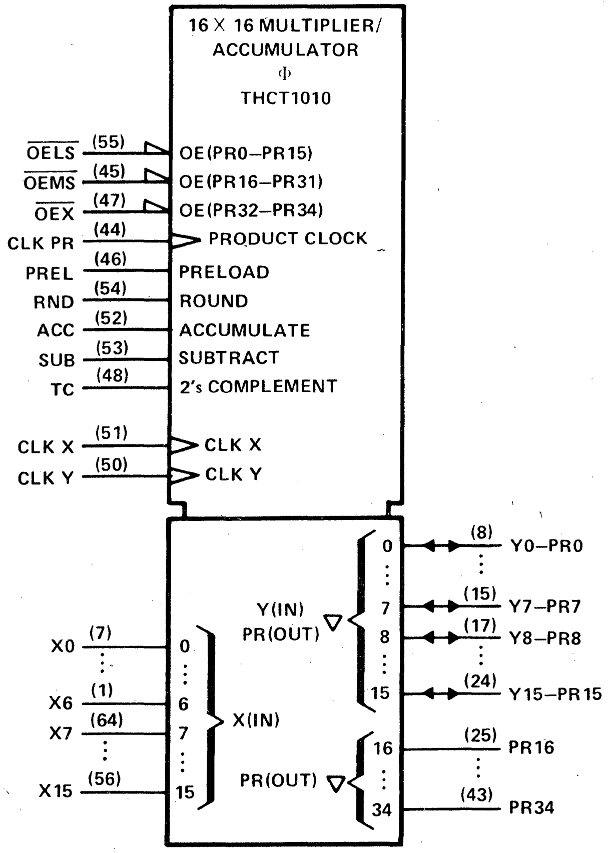
16 X 16 MULTIPLIER/
ACCUMULATOR
Φ
THCT1010
$\overline{\text{OELS}}$ (55) OE(PR0–PR15)
$\overline{\text{OEMS}}$ (45) OE(PR16–PR31)
$\overline{\text{OEX}}$ (47) OE(PR32–PR34)
CLK PR (44) PRODUCT CLOCK
PREL (46) PRELOAD
RND (54) ROUND
ACC (52) ACCUMULATE
SUB (53) SUBTRACT
TC (48) 2's COMPLEMENT
CLK X (51) CLK X
CLK Y (50) CLK Y
Y(IN)
PR(OUT)
0 (8) Y0–PR0
7 (15) Y7–PR7
8 (17) Y8–PR8
15 (24) Y15–PR15
X0 (7) 0
X6 (1) 6
X7 (64) 7
X15 (56) 15
X(IN)
PR(OUT)
16 (25) PR16
34 (43) PR34

Pin numbers shown are for the JD and N packages.

logic diagram (positive logic)

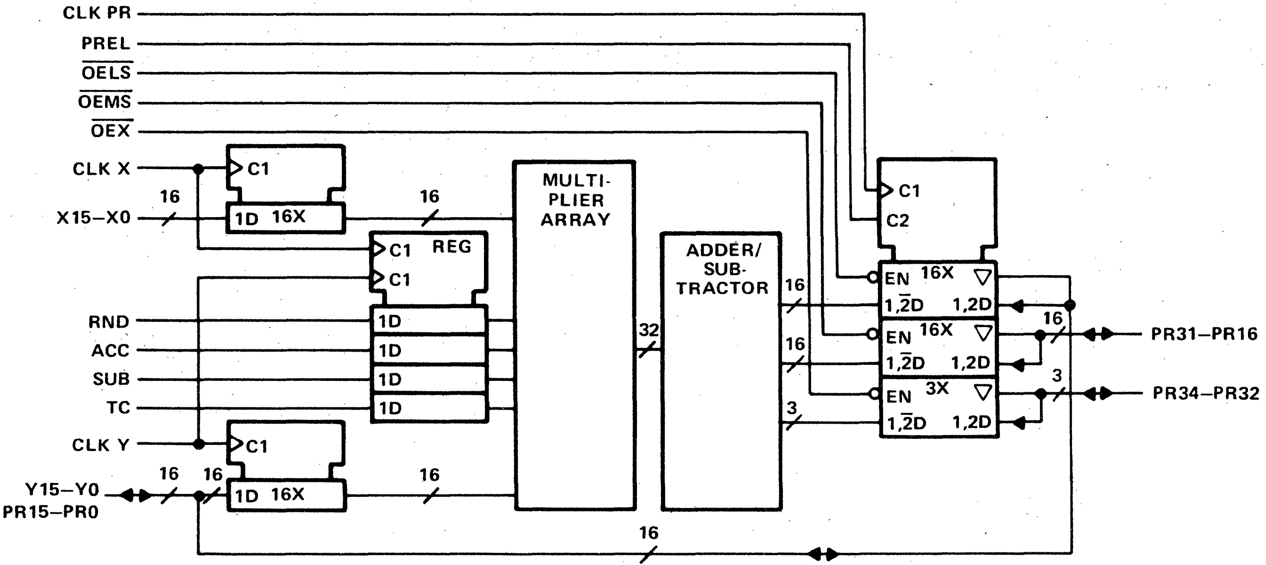
CLK PR
PREL
OELS
OEMS
OEX
CLK X
X15–X0
16
C1
1D 16X
16
C1 REG
C1
1D
1D
1D
1D
RND
ACC
SUB
TC
CLK Y
C1
1D 16X
Y15–Y0
PR15–PR0
16
16
16
MULTI-
PLIER
ARRAY
32
ADDER/
SUB-
TRACTOR
16
16
3
C1
C2
EN 16X ▽
1,2D 1,2D
EN 16X ▽
1,2D 1,2D
EN 3X ▽
1,2D 1,2D
16
PR31–PR16
3
PR34–PR32
16

Pin numbers shown are for the JD and N packages.

absolute maximum ratings over operating free-air temperature range†

Supply voltage range, V_{CC}	−0.5 V to 7 V
Input diode current, I_{IK} ($V_I < 0$ or $V_I > V_{CC}$)	±20 mA
Output diode current, I_{OK} ($V_O < 0$ or $V_O > V_{CC}$)	±20 mA
Continuous output current, I_O ($V_O = 0$ to V_{CC})	±25 mA
Continuous current through V_{CC} or GND pins	±50 mA
Lead temperature 1,6 mm (1/16 inch) from case for 60 seconds	300°C
Storage temperature range	−65°C to 150°C

---

† Stresses beyond those listed under "absolute maximum ratings" may cause permanent damage to the device. These are stress ratings only and functional operation of the device at these or any other conditions beyond those indicated under "recommended operating conditions" is not implied. Exposure to absolute-maximum-rated conditions for extended periods may affect device reliability.

recommended operating conditions

			THCT1010-160M			THCT1010-140E			THCT1010-100			UNIT
			MIN	NOM	MAX	MIN	NOM	MAX	MIN	NOM	MAX	
V_{CC}	Supply voltage		4.5	5	5.5	4.5	5	5.5	4.5	5	5.5	V
V_{IH}	High-level input voltage	V_{CC} = 4.5 V to 5.5 V	2			2			2			V
V_{IL}	Low-level input voltage	V_{CC} = 4.5 V to 5.5 V	0		0.8	0		0.8	0		0.8	V
V_I	Input voltage		0		V_{CC}	0		V_{CC}	0		V_{CC}	V
V_O	Output voltage		0		V_{CC}	0		V_{CC}	0		V_{CC}	V
t_t	Input transition (rise and fall) times		0		500	0		500	0		500	ns
T_A	Operating free-air temperature		−55		125	−40		85	0		70	°C

electrical characteristics over recommended operating free-air temperature range (unless otherwise noted)

PARAMETER	TEST CONDITIONS	V_{CC}	T_A = 25°C MIN	T_A = 25°C TYP	T_A = 25°C MAX	THCT1010-160M MIN	THCT1010-160M MAX	THCT1010-140E THCT1010-100 MIN	THCT1010-140E THCT1010-100 MAX	UNIT
V_{OH}	$V_I = V_{IH}$ or V_{IL}, $I_{OH} = -20\ \mu A$	4.5 V	4.4			4.4		4.4		V
	$V_I = V_{IH}$ or V_{IL}, $I_{OH} = -4$ mA	4.5 V	3.86			3.7		3.76		
V_{OL}	$V_I = V_{IH}$ or V_{IL}, $I_{OL} = 20\ \mu A$	4.5 V			0.1		0.1		0.1	V
	$V_I = V_{IH}$ or V_{IL}, $I_{OL} = 4$ mA	4.5 V			0.32		0.4		0.37	
I_I	V_I = 0 to V_{CC}	5.5 V		±5	±100		±1000		±1000	nA
I_{OZ}	$V_O = V_{CC}$ or 0, $V_I = V_{IH}$ or V_{IL}	5.5 V		±0.01	±0.5		±10		±5	μA
I_{CC}†	$V_I = V_{CC}$ or 0, $I_O = 0$	5.5 V			0.75		2		1	mA
C_i		4.5 V to 5.5 V		3	10		10		10	pF

†See Figure 4.

timing requirements over recommended operating free-air temperature range (unless otherwise noted)

THCT1010-160M, THCT1010-140E

		V_{CC}	T_A = 25°C MIN	T_A = 25°C MAX	THCT1010-160M MIN	THCT1010-160M MAX	THCT1010-140E MIN	THCT1010-140E MAX	UNIT
t_w	Pulse duration, clocks X and Y high or low	4.5 V	20		30		25		ns
		5.5 V	20		30		25		
t_{su}	Setup time, X input before CLK X↑ or Y input before CLK Y↑	4.5 V	10		30		25		ns
		5.5 V	10		30		25		
t_h	Hold time, X input after CLK X↑	4.5 V	6		12		10		ns
		5.5 V	6		12		10		
t_h	Hold time, Y input after CLK Y↑ or preload data after CLK PR↑	4.5 V	1		7		5		ns
		5.5 V	1		7		5		

THCT1010-100

			V_{CC}	T_A = 25°C MIN	T_A = 25°C MAX	THCT1010-100 MIN	THCT1010-100 MAX	UNIT
t_w	Pulse duration, clocks X and Y high or low		4.75 V	20		25		ns
t_{su}	Setup time, X input before CLK X↑ or Y input before CLK Y↑		4.75 V	10		20		ns
t_h	Hold time	X input after CLK X↑	4.75 V	6		10		ns
		Y input after CLK Y↑ or preload data after CLK PR↑	4.75 V	1		5		ns

switching characteristics over recommended operating free-air temperature range (unless otherwise noted), C_L = 50 pF (see Figure 3)

THCT1010-160M, THCT1010-140E

PARAMETER		V_{CC}	T_A = 25°C			THCT1010-160M		THCT1010-140E		UNIT
			MIN	TYP†	MAX	MIN	MAX	MIN	MAX	
t_{pd}	Propagation delay time	4.5 V		45			65		55	ns
		5.5 V					60		50	
t_{en}	Enable time	4.5 V		35			65		45	ns
		5.5 V					60		40	
t_{dis}	Disable time	4.5 V		35			60		45	ns
		5.5 V					55		40	
t_{macc}	Multiply/accumulate time	4.5 V		100			160		140	ns
		5.5 V					140		120	

C_{pd}	Power dissipation capacitance	No load, T_A = 25°C	750 pF typ

THCT1010-100

		V_{CC}	T_A = 25°C			THCT1010-100		UNIT
			MIN	TYP†	MAX	MIN	MAX	
t_{pd}	Propagation delay time	4.75 V		35			45	ns
t_{en}	Enable time	4.75 V		30			40	ns
t_{dis}	Disable time	4.75 V		30			40	ns
t_{macc}	Multiply/accumulate time	4.75 V		90			100	ns

†Typical values are at V_{CC} = 5 V.

PARAMETER MEASUREMENT INFORMATION

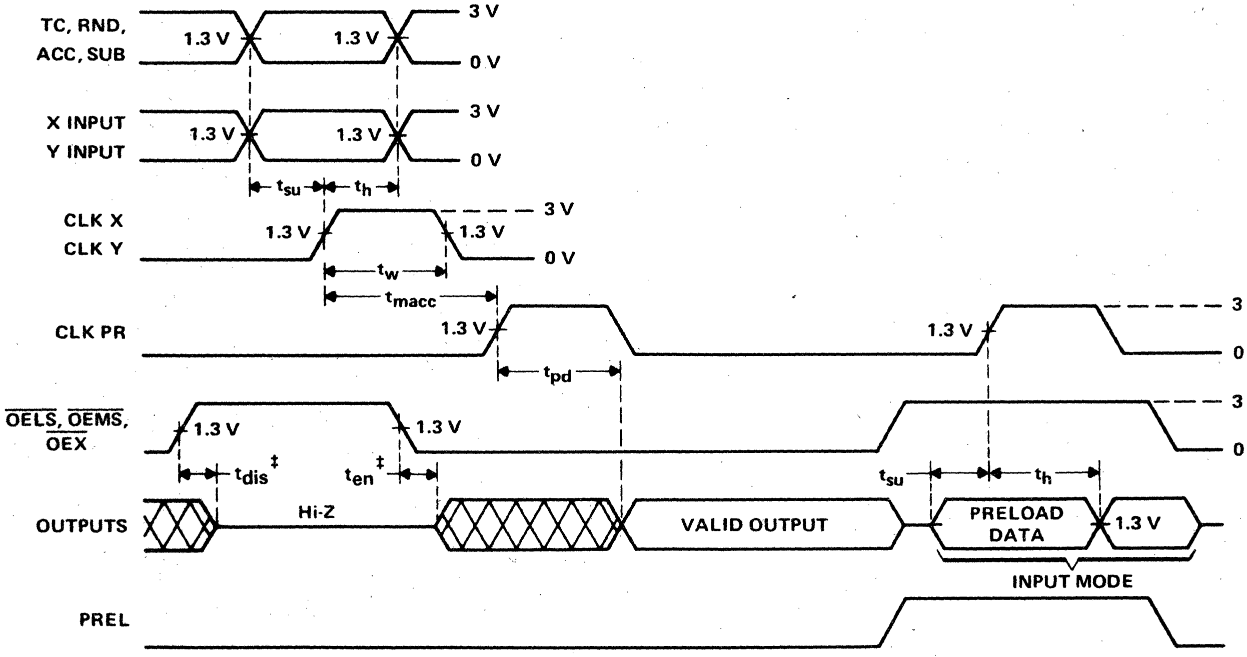
TC, RND,
ACC, SUB
1.3 V
1.3 V
3 V
0 V
X INPUT
Y INPUT
1.3 V
1.3 V
3 V
0 V
t_{su}
t_h
CLK X
CLK Y
1.3 V
1.3 V
3 V
0 V
t_w
t_{macc}
CLK PR
1.3 V
1.3 V
3 V
0 V
t_{pd}
OELS, OEMS,
OEX
1.3 V
1.3 V
3 V
0 V
t_{dis}‡
t_{en}‡
t_{su}
t_h
OUTPUTS
Hi-Z
VALID OUTPUT
PRELOAD
DATA
1.3 V
INPUT MODE
PREL

‡The measurement points for enable and disable times are as shown in Figure 2.

FIGURE 1. VOLTAGE WAVEFORMS

ADVANCE INFORMATION

THCT1011M, THCT1011E
16-BIT BY 16-BIT MULTIPLIER/ACCUMULATOR

D2893, XXXX 1985

- 16-Bit by 16-Bit Parallel Multiplication/Accumulation
- 35-Bit-Wide Accumulator
- Inputs are TTL-Voltage Compatible
- Outputs Capable of Driving up to 10 LSTTL Loads
- Single 5-V Power Supply
- Low Power Dissipation . . . 150 mW Typical
- Similar to the THCT1010, TRW TDC1010J, and AM29510
- Pipeline Register Increases Operating Frequency 50% Compared to THCT1010
- High-Speed Twin-Well CMOS Process
- Package Options Include Ceramic Chip Carriers and Ceramic DIPs, Plastic Chip Carriers, and Plastic DIPs
- Dependable Texas Instruments Quality and Reliability

JD OR N DUAL-IN-LINE PACKAGE

(TOP VIEW)

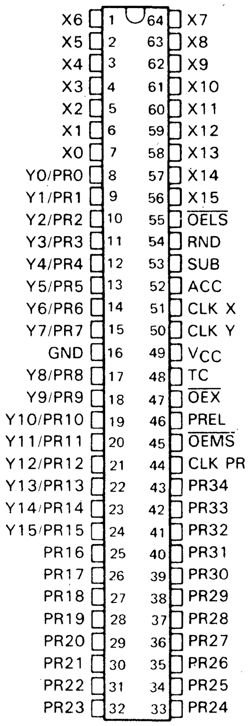
X6 1
X5 2
X4 3
X3 4
X2 5
X1 6
X0 7
Y0/PR0 8
Y1/PR1 9
Y2/PR2 10
Y3/PR3 11
Y4/PR4 12
Y5/PR5 13
Y6/PR6 14
Y7/PR7 15
GND 16
Y8/PR8 17
Y9/PR9 18
Y10/PR10 19
Y11/PR11 20
Y12/PR12 21
Y13/PR13 22
Y14/PR14 23
Y15/PR15 24
PR16 25
PR17 26
PR18 27
PR19 28
PR20 29
PR21 30
PR22 31
PR23 32
64 X7
63 X8
62 X9
61 X10
60 X11
59 X12
58 X13
57 X14
56 X15
55 OELS
54 RND
53 SUB
52 ACC
51 CLK X
50 CLK Y
49 VCC
48 TC
47 OEX
46 PREL
45 OEMS
44 CLK PR
43 PR34
42 PR33
41 PR32
40 PR31
39 PR30
38 PR29
37 PR28
36 PR27
35 PR26
34 PR25
33 PR24

FN OR FK CHIP-CARRIER PACKAGE

(TOP VIEW)

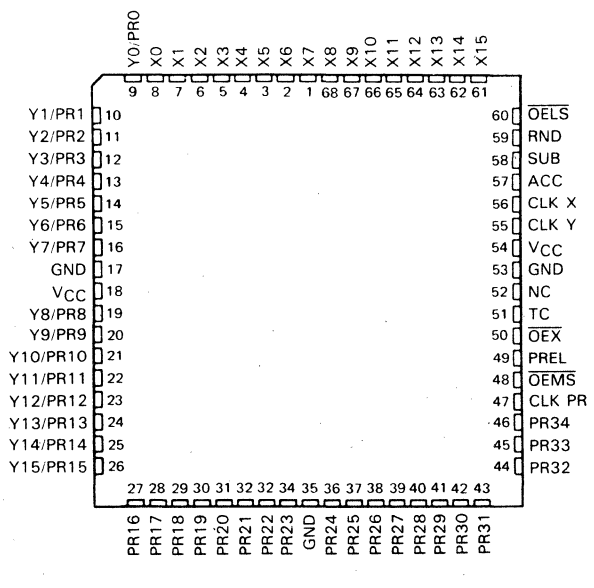
Y0/PR0 9
X0 8
X1 7
X2 6
X3 5
X4 4
X5 3
X6 2
X7 1
X8 68
X9 67
X10 66
X11 65
X12 64
X13 63
X14 62
X15 61
Y1/PR1 10
Y2/PR2 11
Y3/PR3 12
Y4/PR4 13
Y5/PR5 14
Y6/PR6 15
Y7/PR7 16
GND 17
VCC 18
Y8/PR8 19
Y9/PR9 20
Y10/PR10 21
Y11/PR11 22
Y12/PR12 23
Y13/PR13 24
Y14/PR14 25
Y15/PR15 26
60 OELS
59 RND
58 SUB
57 ACC
56 CLK X
55 CLK Y
54 VCC
53 GND
52 NC
51 TC
50 OEX
49 PREL
48 OEMS
47 CLK PR
46 PR34
45 PR33
44 PR32
27 PR16
28 PR17
29 PR18
30 PR19
31 PR20
32 PR21
32 PR22
34 PR23
35 GND
36 PR24
37 PR25
38 PR26
39 PR27
40 PR28
41 PR29
42 PR30
43 PR31

NC—No internal connection.

description

The THCT1011 is a TTL-voltage-compatible, low-power, high-speed 16-bit by 16-bit multiplier/accumulator for digital signal processing, digital filters, fast Fourier transformations, array processing, and microprocessor throughput enhancement. These devices are similar in operation to the THCT1010 and the TDC1010J. The pipeline feature enables faster operation and the CMOS technology ensures minimal power dissipation. The lower power dissipation causes the differences between junction and ambient temperatures to be minimized and, therefore, eliminates the heat-sink requirements and increases reliability. High-speed is achieved by using a modified Booth algorithm, a feed-forward carry circuit, and a conditional sum adder that enhances the final adder stage of the multiplier.

The THCT1011 inputs consist of three registers, a 16-bit X input, a 16-bit Y input, and an input control register. The 35-bit output product

Caution. These devices have limited built-in gate protection. The leads should be shorted together or the device placed in conductive foam during storage or handling to prevent electrostatic damage to the MOS gates.

register consists of a 16-bit most-significant-product (MSP) bus, a 16-bit least-significant-product (LSP) bus that is shared with the 16-bit Y input bus, and a 3-bit extended-product (XTP) bus (PR32 through PR34); see the functional block diagram. The input registers are independently controlled by CLK X and CLK Y, and the product registers are D-type positive-edge-triggered flip-flops. Separate three-state output enables are provided for each output product register. These, in combination with the independent input clocks, allow operation on a microprocessor bus.

The THCT1011 differs from the THCT1010 by the addition of a pipeline register. The pipeline register is inserted between the multiplier and the accumulator (adder/subtractor) and is latched by the product clock (CLK PR). A multiplication requires two CLK PR cycles to output. Data is first loaded into the X and Y input registers. The first rising edge of the CLK PR latches the product into the pipeline register. New data can be loaded into the X and Y input registers simultaneously. On the second rising edge of CLK PR, the first product is loaded into the output register while the second product is loaded into the pipeline register (see Figure 1). In pipelined operations, a new product is produced every product clock cycle (CLK PR) and the multiply/accumulate rate is limited by the multiply time (t_{mult}).

The THCT1011 has a round control (RND) that rounds the product to the 19 most significant bits. The preload control (PREL) is used in conjunction with the output enables to initialize the contents of the output registers. The THCT1011 will perform multiplication and addition, multiplication and subtraction, or straight multiplication depending upon the states of the accumulate control (ACC) and subtractor control (SUB). The TC control provides the capability of formatting the input data to be either two's complement or unsigned magnitude.

The THCT1011M is characterized for operation over the full military temperature range of −55 °C to 125 °C. The THCT1011E is characterized for operation from −40 °C to 85 °C.

PRELOAD FUNCTION TABLE

PREL	$\overline{\text{OEX}}$	$\overline{\text{OEMS}}$	$\overline{\text{OELS}}$	XTP	MSP	LSP
L	L	L	L	(PR32 – PR34)	(PR16 – PR31)	(PR0 – PR15)
L	L	L	H	(PR32 – PR34)	(PR16 – PR31)	Z
L	L	H	L	(PR32 – PR34)	Z	(PR0 – PR15)
L	L	H	H	(PR32 – PR34)	Z	Z
L	H	L	L	Z	(PR16 – PR31)	(PR0 – PR15)
L	H	L	H	Z	(PR16 – PR31)	Z
L	H	H	L	Z	Z	(PR0 – PR15)
L	H	H	H	Z	Z	Z
H	L	L	L	Z	Z	Z
H	L	L	H	Z	Z	PL
H	L	H	L	Z	PL	Z
H	L	H	H	Z	PL	PL
H	H	L	L	PL	Z	Z
H	H	L	H	PL	Z	PL
H	H	H	L	PL	PL	Z
H	H	H	H	PL	PL	PL

PL = Output buffers at high impedance or output disabled. Preload data supplied externally at output pins will be loaded into the output register on the rising edge of CLK PR.

TEXAS INSTRUMENTS
POST OFFICE BOX 225012 • DALLAS, TEXAS 75265

logic symbol

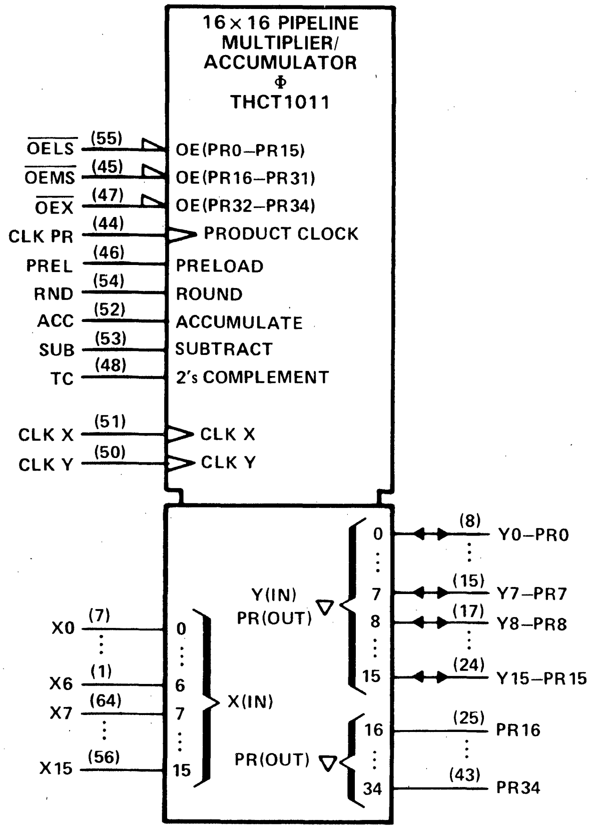
16×16 PIPELINE
MULTIPLIER/
ACCUMULATOR
Φ
THCT1011
OELS (55) OE(PR0–PR15)
OEMS (45) OE(PR16–PR31)
OEX (47) OE(PR32–PR34)
CLK PR (44) PRODUCT CLOCK
PREL (46) PRELOAD
RND (54) ROUND
ACC (52) ACCUMULATE
SUB (53) SUBTRACT
TC (48) 2's COMPLEMENT
CLK X (51) CLK X
CLK Y (50) CLK Y
Y(IN)
PR(OUT)
0 (8) Y0–PR0
7 (15) Y7–PR7
8 (17) Y8–PR8
15 (24) Y15–PR15
X0 (7) 0
X6 (1) 6
X7 (64) 7
X15 (56) 15
X(IN)
PR(OUT)
16 (25) PR16
34 (43) PR34

Pin numbers shown are for the JD and N packages.

logic diagram (positive logic)

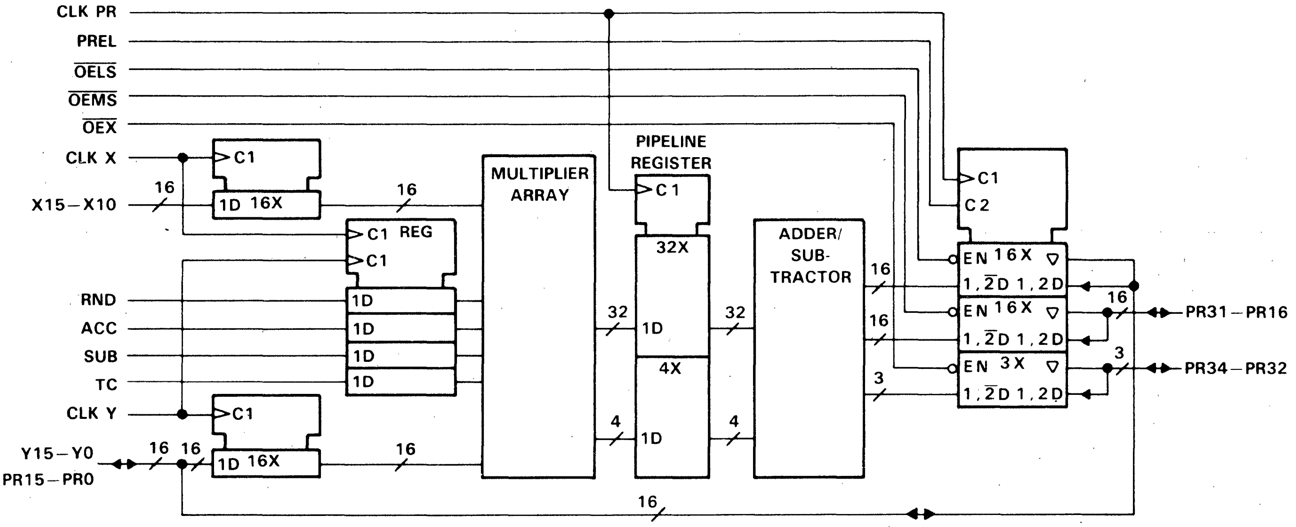
CLK PR
PREL
OELS
OEMS
OEX
CLK X
X15–X10
RND
ACC
SUB
TC
CLK Y
Y15–Y0
PR15–PR0
C1
1D 16X
C1 REG
C1
1D
1D
1D
1D
C1
1D 16X
16
16
16 16
16
MULTIPLIER ARRAY
PIPELINE REGISTER
C1
32X
1D
4X
1D
32
4
32
4
ADDER/ SUB- TRACTOR
16
16
3
C1
C2
EN 16X
1,2D 1,2D
EN 16X
1,2D 1,2D
EN 3X
1,2D 1,2D
16
3
PR31–PR16
PR34–PR32
16

Pin numbers shown are for the JD and N packages.

PIN NO.	 NAME	DESCRIPTION
56–64, 1–7	X15 thru X0	X data inputs, X15 is the most significant bit. The data is loaded into the X register on the rising edge of CLKX.
8–15, 17–24	Y0/PR0 thru Y15/PR15	I/O ports for least-significant-product (LSP) bits of output product register, input ports for Y data. Y0/PR0 is the least significant bit. The mode is controlled by the PREL and $\overline{\text{OEMS}}$ pins.
25–43	PR16 thru PR34	I/O ports for output product register bits. PR16 through PR31 are the most-significant-product (MSP) bits. PR32 through PR34 are the extended product (XTP) bits. The mode is controlled by PREL, $\overline{\text{OELS}}$, $\overline{\text{OEX}}$.
44	CLK PR	Product clock input. On the low-to-high transition, latches the product into the pipeline register and the LSP, MSP, and XTP into the output product register.
45	$\overline{\text{OEMS}}$	Active-low output enable for MSP output product register. When high, causes the PR31 through PR16 outputs to be in the high-impedance state.
46	PREL	Preload control. When high, the output product register's outputs are disabled. When an output enable ($\overline{\text{OELS}}$, $\overline{\text{OEMS}}$, $\overline{\text{OEX}}$) is high, preload data can be entered into the output product register from the PR I/O lines on the rising edge of CLK PR.
47	$\overline{\text{OEX}}$	Active-low output enable for XTP output product register. When high, causes the PR32 through PR34 outputs to be in the high-impedance state.
48	TC	Two's complement control. When TC is high, the input data is in two's complement format. When TC is low, the input data is in unsigned magnitude format. The TC signal is loaded into the control register on the rising edge of CLK X or CLK Y.
50	CLK Y	Y clock input. On the low-to-high transition, clocks data in from the Y inputs.
51	CLK X	X clock input. On the low-to-high transition, clocks data in from the X inputs.
52	ACC	Accumulator control. When ACC is high and SUB is low, the content of the output product register is added to the next product generated. The sum is then placed in the output product register on the rising edge of CLK PR. When ACC is low, the product is stored directly into the output register on the rising edge of CLK PR. The ACC signal is loaded into the control register at the rising edge of CLK X or CLK Y.
53	SUB	Subtraction control. When SUB and ACC are high, the content of the output product register is subtracted from the next product generated. The result is then placed in the output product register on the rising edge of CLK PR. When SUB is low and ACC is high, the addition operation is performed instead of subtraction. When ACC is low, SUB is a "Don't Care". The SUB signal is loaded into the control register on the rising edge of CLK X or CLK Y.
54	RND	Round control. When high, causes the product of the X and Y inputs to be rounded to the 19 most significant bits by adding a 1 to the MSB of the LSP. The RND signal is loaded into the control register on the rising edge of CLK X or CLK Y.
55	$\overline{\text{OELS}}$	Active-low output enable for LSP output product register. When high, causes the PR0 through PR15 outputs to be in the high-impedance state.

Pin numbers shown are for the JD and N packages.

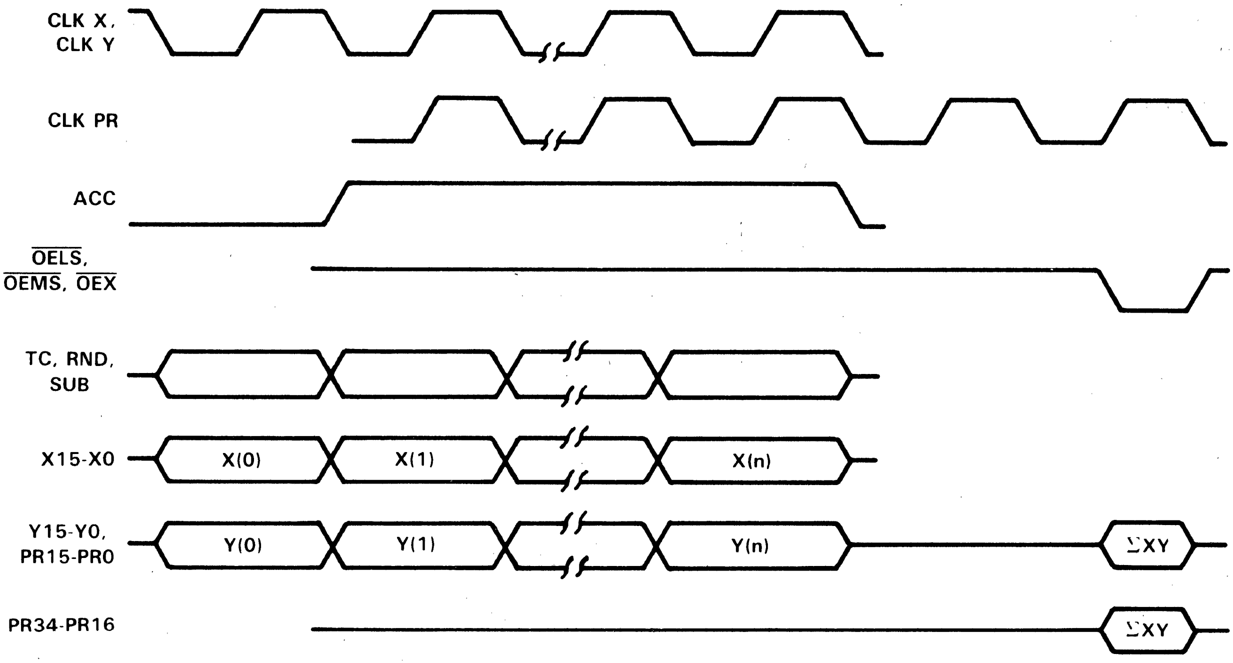

FIGURE 1. TYPICAL PIPELINED MULTIPLY/ACCUMULATE CYCLE

absolute maximum ratings over operating free-air temperature range†

Supply voltage range, V_{CC}	−0.5 V to 7 V
Input diode current, I_{IK} ($V_I < 0$ or $V_I > V_{CC}$)	±20 mA
Output diode current, I_{OK} ($V_O < 0$ or $V_O > V_{CC}$)	±20 mA
Continuous output current, I_O ($V_O = 0$ to V_{CC})	±25 mA
Continuous current through V_{CC} or GND pins	±50 mA
Lead temperature 1,6 mm (1/16 inch) from case for 60 seconds	300°C
Storage temperature range	−65°C to 150°C

---

† Stresses beyond those listed under "absolute maximum ratings" may cause permanent damage to the device. These are stress ratings only and functional operation of the device at these or any other conditions beyond those indicated under "recommended operating conditions" is not implied. Exposure to absolute-maximum-rated conditions for extended periods may affect device reliability.

recommended operating conditions

			THCT1011M			THCT1011E			UNIT
			MIN	NOM	MAX	MIN	NOM	MAX	
V_{CC}	Supply voltage		4.5	5	5.5	4.5	5	5.5	V
V_{IH}	High-level input voltage	V_{CC} = 4.5 V to 5.5 V	2			2			V
V_{IL}	Low-level input voltage	V_{CC} = 4.5 V to 5.5 V	0		0.8	0		0.8	V
V_I	Input voltage		0		V_{CC}	0		V_{CC}	V
V_O	Output voltage		0		V_{CC}	0		V_{CC}	V
t_t	Input transition (rise and fall) times		0		500	0		500	ns
T_A	Operating free-air temperature		−55		125	−40		85	°C

electrical characteristics over recommended operating free-air temperature range (unless otherwise noted)

PARAMETER	TEST CONDITIONS	V_{CC}	T_A = 25°C MIN	T_A = 25°C TYP	T_A = 25°C MAX	THCT1011M MIN	THCT1011M MAX	THCT1011E MIN	THCT1011E MAX	UNIT
V_{OH}	$V_I = V_{IH}$ or V_{IL}, $I_{OH} = -20\ \mu A$	4.5 V	4.4			4.4		4.4		V
	$V_I = V_{IH}$ or V_{IL}, $I_{OH} = -4$ mA	4.5 V	3.86			3.7		3.76		
V_{OL}	$V_I = V_{IH}$ or V_{IL}, $I_{OL} = 20\ \mu A$	4.5 V			0.1		0.1		0.1	V
	$V_I = V_{IH}$ or V_{IL}, $I_{OL} = 4$ mA	4.5 V			0.32		0.4		0.37	
I_I	$V_I = 0$ to V_{CC}	5.5 V		±5	±100		±1000		±1000	nA
I_{OZ}	$V_O = V_{CC}$ or 0, $V_I = V_{IH}$ or V_{IL}	5.5 V		±0.01	±0.5		±10		±5	μA
I_{CC}†	$V_I = V_{CC}$ or 0, $I_O = 0$	5.5 V			0.75		2		1	mA
C_i		4.5 V to 5.5 V		3	10		10		10	pF

†See Figure 1.

timing requirements over recommended operating free-air temperature range (unless otherwise noted)

		V_{CC}	T_A = 25°C MIN	T_A = 25°C TYP	T_A = 25°C MAX	THCT1011M MIN	THCT1011M MAX	THCT1011E MIN	THCT1011E MAX	UNIT
t_w	Pulse duration, clocks X and Y high or low	4.5 V		20		30		25		ns
		5.5 V		20		30		25		
t_{su}	Setup time, X input before CLK X↑ or Y input before CLK Y↑	4.5 V		10		30		20		ns
		5.5 V		10		30		20		
t_h	Hold time, X input after CLK X↑ or Y input after CLK Y↑	4.5 V		6		12		10		ns
		5.5 V		6		12		10		
t_h	Hold time, X input after CLK Y↑ or preload data from CLK PR↑	4.5 V		1		7		5		ns
		5.5 V		1		7		5		

switching characteristics over recommended operating free-air temperature range (unless otherwise noted), C_L = 50 pF (see Figure 3)

PARAMETER		V_{CC}	T_A = 25°C MIN	T_A = 25°C TYP	T_A = 25°C MAX	THCT1011M MIN	THCT1011M MAX	THCT1011E MIN	THCT1011E MAX	UNIT
t_{pd}	Propagation delay time	4.5 V		45			65		55	ns
		5.5 V		45			60		50	
t_{en}	Enable time	4.5 V		35			65		45	ns
		5.5 V		35			60		40	
t_{dis}	Disable time	4.5 V		35			60		45	ns
		5.5 V		35			55		40	
t_{mult}	Multiply time	4.5 V		70			110		90	ns
		5.5 V		60			95		75	
t_{acc}	Accumulate time	4.5 V					75		60	ns
		5.5 V					65		50	

C_{pd}	Power dissipation capacitance‡	No load, T_A = 25°C	750 pF typ

‡No-load dynamic power dissipation capacitance ($P_D = C_{pd} V_{CC}^2 f + I_{CC} V_{CC}$).

PARAMETER MEASUREMENT INFORMATION

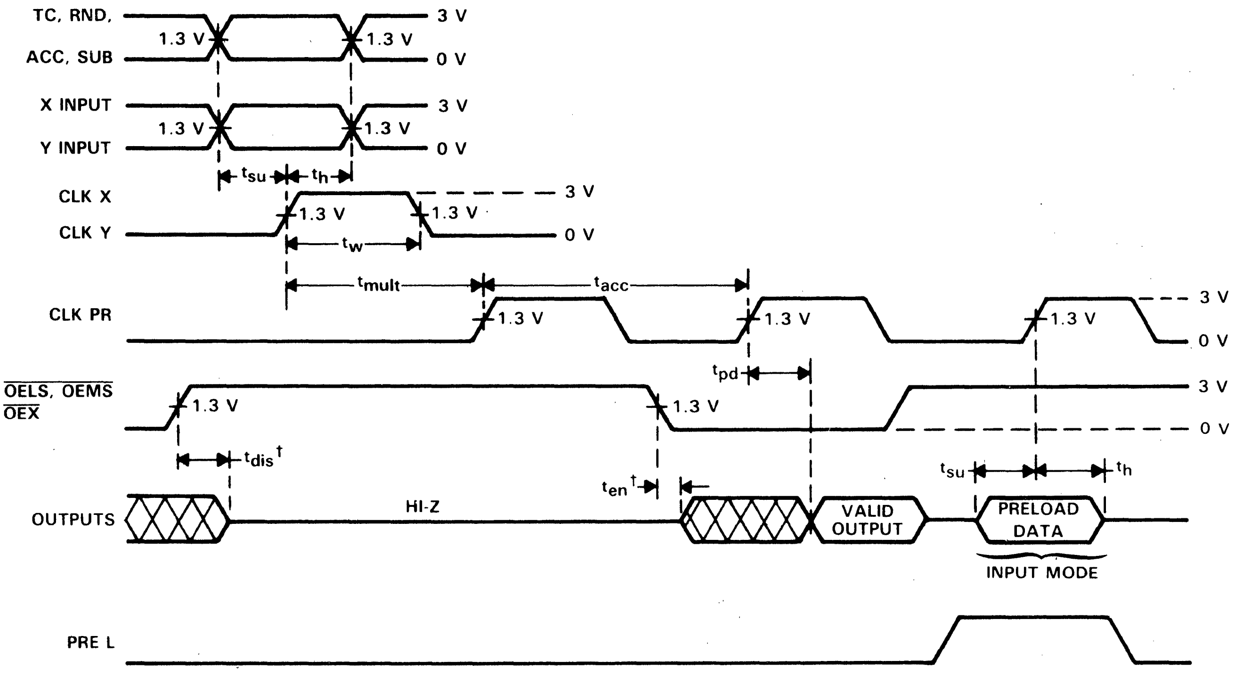
TC, RND,
ACC, SUB
1.3 V
1.3 V
3 V
0 V
X INPUT
Y INPUT
1.3 V
1.3 V
3 V
0 V
t_{su}
t_h
CLK X
CLK Y
1.3 V
1.3 V
3 V
0 V
t_w
t_{mult}
t_{acc}
CLK PR
1.3 V
1.3 V
1.3 V
3 V
0 V
t_{pd}
$\overline{OELS}$, $\overline{OEMS}$
$\overline{OEX}$
1.3 V
1.3 V
3 V
0 V
t_{dis}†
t_{en}†
t_{su}
t_h
OUTPUTS
HI-Z
VALID OUTPUT
PRELOAD DATA
INPUT MODE
PRE L

†The measurement points for enable and disable times are as shown in Figure 3.

FIGURE 2. VOLTAGE WAVEFORMS

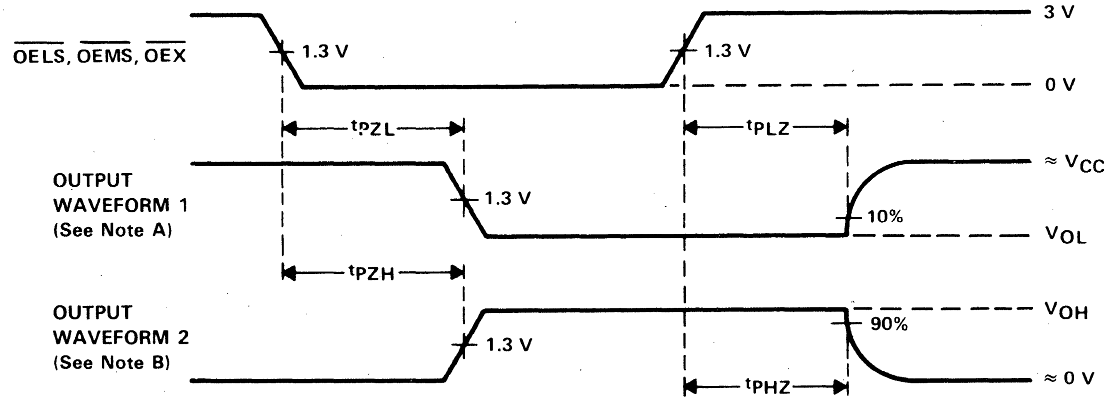
$\overline{OELS}$, $\overline{OEMS}$, $\overline{OEX}$
1.3 V
1.3 V
3 V
0 V
t_{PZL}
t_{PLZ}
OUTPUT
WAVEFORM 1
(See Note A)
1.3 V
10%
≈ V_{CC}
V_{OL}
t_{PZH}
OUTPUT
WAVEFORM 2
(See Note B)
1.3 V
90%
V_{OH}
≈ 0 V
t_{PHZ}

NOTE: A. Waveform 1 is for an output with internal conditions such that the output is low except when disabled by the output control.
B. Waveform 2 is for an output with internal conditions such that the output is high except when disabled by the output control.

FIGURE 3. DETAILED VOLTAGE WAVEFORMS FOR ENABLE AND DISABLE TIMES

THCT29520, THCT29521 MULTILEVEL PIPELINE REGISTERS

D2925, NOVEMBER 1985

- **Four 8-Bit Registers**
- **Dual 2-Level or Single 4-Level Pipeline Registers**
- **Any One of Four Registers Selectable for Output**
- **High-Speed Low-Power CMOS Logic**
- **Fully TTL Compatible**
- **Dependable Texas Instruments Quality and Reliability**

NT OR DW PACKAGE
(TOP VIEW)

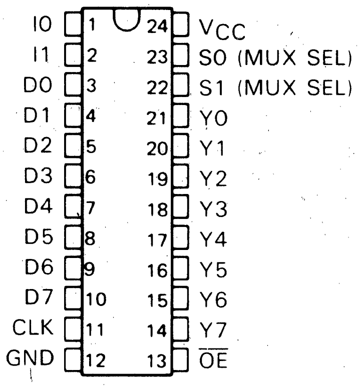

description

The THCT29520 and THCT29521 are high-speed CMOS multilevel pipeline registers. They are interchangeable with the Advanced Micro Device bipolar AM29520 and AM29521 but dissipate a fraction of the power.

The THCT29520 and THCT29521 contain four 8-bit positive-edge-triggered registers. The registers can operate as one set of 4-level pipeline registers or two sets of 2-level pipeline registers. The output can be selected from any one of the four registers.

The THCT29520 and THCT29521 differ in the way data is transferred in the dual 2-level register modes (I = 01 or 10). For the THCT29520, new data is written into the first-level register while the old data in the first-level register is shifted into the second-level register. For the THCT29521, new data is written over the old data in the first-level register. The data in the second-level register remains unchanged.

The THCT29520 and THCT29521 are characterized for operation from 0°C to 70°C. The THCT29520E and THCT29521E are characterized for operation from −40°C to 85°C.

THCT29520 MODES

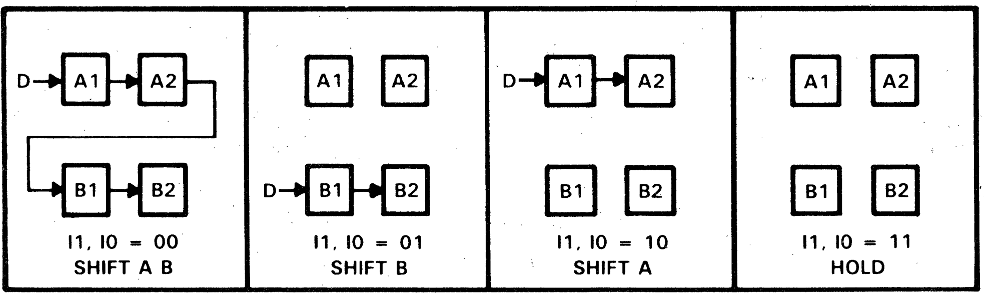

I1	I0	OPERATION	A1	A2	B1	B2
L	L	SHIFT A B	D	$A1_0$	$A2_0$	$B1_0$
L	H	SHIFT B	$A1_0$	$A2_0$	D	$B1_0$
H	L	SHIFT A	D	$A1_0$	$B1_0$	$B2_0$
H	H	HOLD	$A1_0$	$A2_0$	$B1_0$	$B2_0$

PRODUCT PREVIEW documents contain information on products in the formative or design phase of development. Characteristic data and other specifications are design goals. Texas Instruments reserves the right to change or discontinue these products without notice.

Copyright © 1985, Texas Instruments Incorporated

TEXAS INSTRUMENTS
POST OFFICE BOX 225012 • DALLAS, TEXAS 75265

THCT29521 MODES

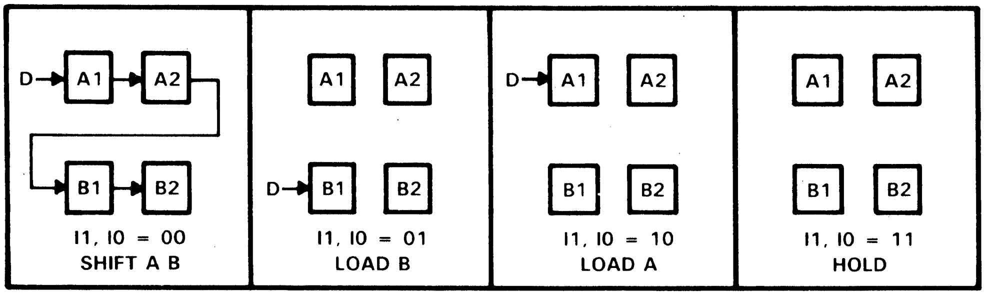
D
A1
A2
B1
B2
I1, I0 = 00
SHIFT A B
D
A1
A2
B1
B2
I1, I0 = 01
LOAD B
D
A1
A2
B1
B2
I1, I0 = 10
LOAD A
A1
A2
B1
B2
I1, I0 = 11
HOLD

I1	I0	OPERATION	A1	A2	B1	B2
L	L	SHIFT A B	D	$A1_0$	$A2_0$	$B1_0$
L	H	LOAD B	$A1_0$	$A2_0$	D	$B2_0$
H	L	LOAD A	D	$A2_0$	$B1_0$	$B2_0$
H	H	HOLD	$A1_0$	$A2_0$	$B1_0$	$B2_0$

OUTPUT FUNCTION TABLE

INPUTS			OUTPUT
$\overline{OE}$	S1	S0	Y
L	L	L	B2
L	L	H	B1
L	H	L	A2
L	H	H	A1
H	X	X	Z

logic symbols†

THCT29520

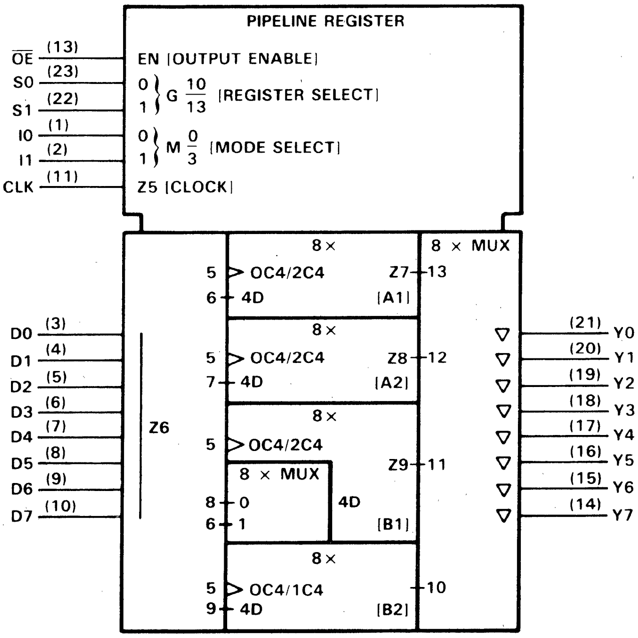
PIPELINE REGISTER
$\overline{OE}$ (13)
S0 (23)
S1 (22)
I0 (1)
I1 (2)
CLK (11)
EN (OUTPUT ENABLE)
0 1 G 10/13 (REGISTER SELECT)
0 1 M 0/3 (MODE SELECT)
Z5 (CLOCK)
D0 (3)
D1 (4)
D2 (5)
D3 (6)
D4 (7)
D5 (8)
D6 (9)
D7 (10)
Z6
8×
5 > OC4/2C4 Z7 13
6 4D [A1]
8×
5 > OC4/2C4 Z8 12
7 4D [A2]
8×
5 > OC4/2C4 Z9 11
8 × MUX
8 0
6 1
4D [B1]
8×
5 > OC4/1C4 10
9 4D [B2]
8 × MUX
(21) Y0
(20) Y1
(19) Y2
(18) Y3
(17) Y4
(16) Y5
(15) Y6
(14) Y7

THCT29521

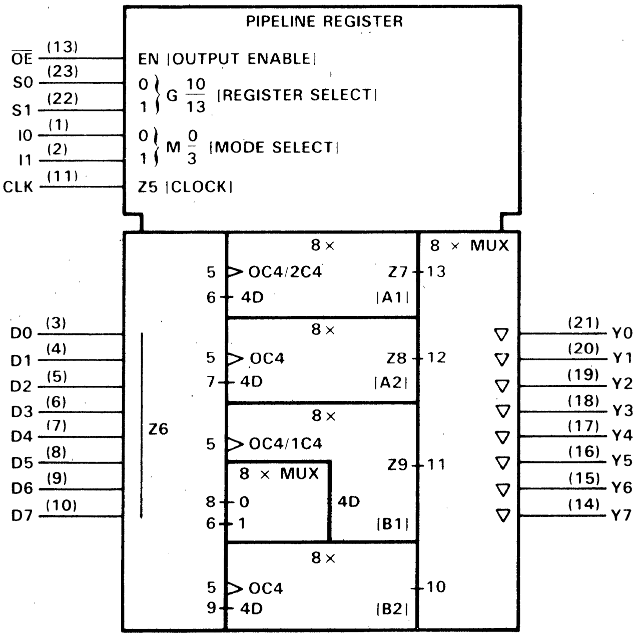
PIPELINE REGISTER
$\overline{OE}$ (13)
S0 (23)
S1 (22)
I0 (1)
I1 (2)
CLK (11)
EN (OUTPUT ENABLE)
0 1 G 10/13 (REGISTER SELECT)
0 1 M 0/3 (MODE SELECT)
Z5 (CLOCK)
D0 (3)
D1 (4)
D2 (5)
D3 (6)
D4 (7)
D5 (8)
D6 (9)
D7 (10)
Z6
8×
5 > OC4/2C4 Z7 13
6 4D [A1]
8×
5 > OC4 Z8 12
7 4D [A2]
8×
5 > OC4/1C4 Z9 11
8 × MUX
8 0
6 1
4D [B1]
8×
5 > OC4 10
9 4D [B2]
8 × MUX
(21) Y0
(20) Y1
(19) Y2
(18) Y3
(17) Y4
(16) Y5
(15) Y6
(14) Y7

†These symbols are in accordance with ANSI/IEEE Std 91-1984 and IEC Publication 617-12.

logic diagram (positive logic)

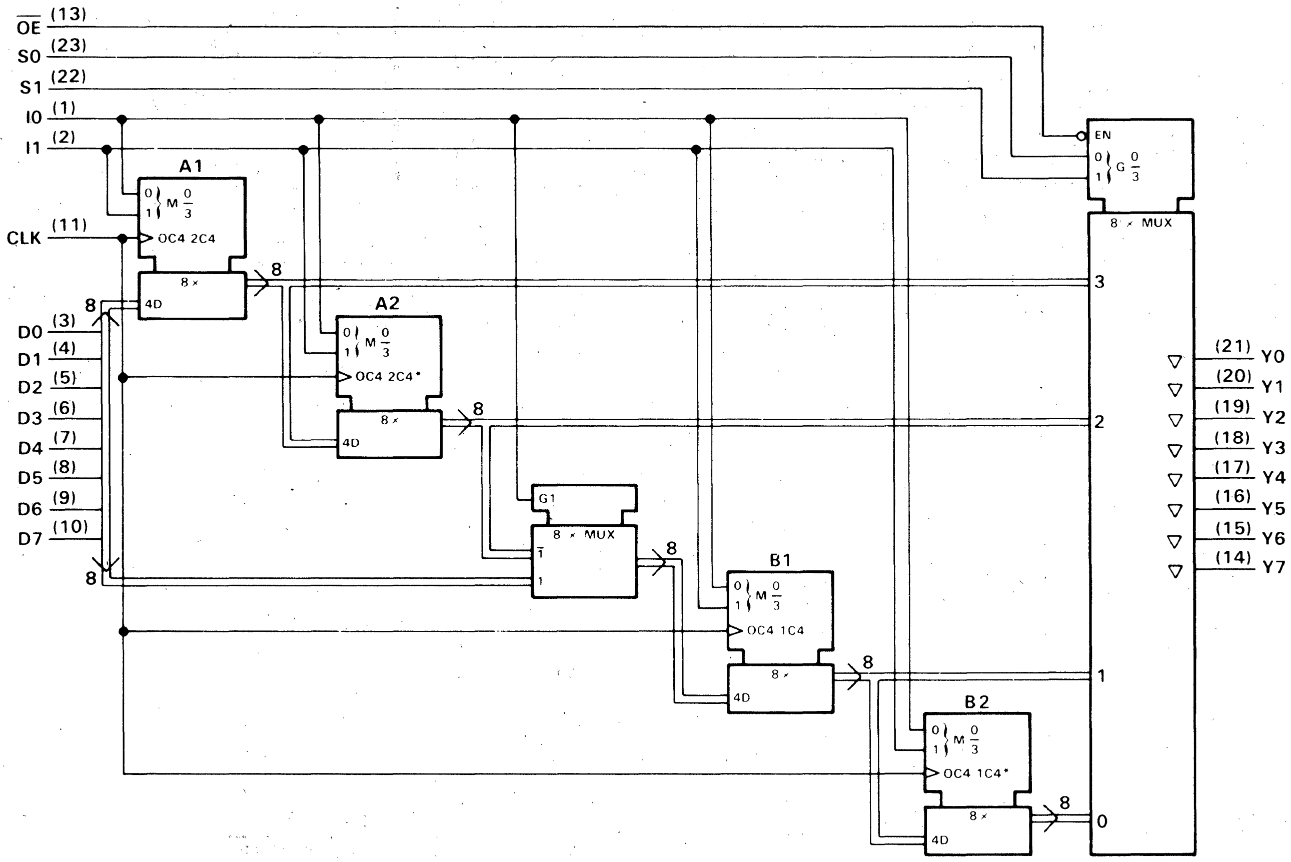
OE (13)
S0 (23)
S1 (22)
I0 (1)
I1 (2)
A1
CLK (11)
0 1 M 0/3
OC4 2C4
8 ×
4D
8
D0 (3)
D1 (4)
D2 (5)
D3 (6)
D4 (7)
D5 (8)
D6 (9)
D7 (10)
8
A2
0 1 M 0/3
OC4 2C4*
8 ×
4D
8
G1
8 × MUX
1
1
8
B1
0 1 M 0/3
OC4 1C4
8 ×
4D
8
B2
0 1 M 0/3
OC4 1C4*
8 ×
4D
8
EN
0 1 G 0/3
8 × MUX
3
2
1
0
(21) Y0
(20) Y1
(19) Y2
(18) Y3
(17) Y4
(16) Y5
(15) Y6
(14) Y7

*The label "OC4/2C4" means that the clock in register A2 affects the eight data inputs of that register, collectively labeled "4D", only in modes 0 and 2 (I1, I0 = L L and H L, respectively). This logic diagram applies specifically for the THCT29520. For the THCT29521, the labels marked with the asterisks in registers A2 and B2 would both be reduced to "OC4" (as in the logic symbols on the previous page) indicating that these clocks have effect only in mode 0 in that device. Otherwise this diagram applies to both devices.

absolute maximum rating over operating free-air temperature range (see Note 1)

Supply voltage, V_{CC}	−0.5 V to 7 V
Input diode current, I_{IK} ($V_I < 0$ or $V_I > V_{CC}$	±20 mA
Output diode current, I_{OK} ($V_O < 0$ or $V_O > V_{CC}$	±20 mA
Continuous output current, I_O ($V_O = 0$ to V_{CC})	±35 mA
Continuous current through V_{CC} or GND	±70 mA
Lead temperature 1,6 mm (1/16 inch) from case for 60 seconds	300 °C
Storage temperature range	−65 °C to 150 °C

NOTE 1: Stress beyond those listed under "absolute maximum ratings" may cause permanent damage to the device. These are stress ratings only and functional operation of the device at these or any other conditions beyond those indicated in the "recommended operating conditions" section of this specification is not implied. Exposure to absolute-maximum-rated conditions for extended periods may affect device reliability.

recommended operating conditions

			THCT29520E THCT29521E			THCT29520 THCT29521			UNIT
			MIN	NOM	MAX	MIN	NOM	MAX	
V_{CC}	Supply voltage		4.5	5	5.5	4.5	5	5.5	V
V_{IH}	High-level input voltage	V_{CC} = 4.5 V to 5.5 V	2			2			V
V_{IL}	Low-level input voltage	V_{CC} = 4.5 V to 5.5 V	0		0.8	0		0.8	V
V_I	Input voltage		0		V_{CC}	0		V_{CC}	V
V_O	Output voltage		0		V_{CC}	0		V_{CC}	V
t_t	Input transition (rise and fall) time	V_{CC} = 4.5 V to 5.5 V	0		500	0		500	ns
T_A	Operating free-air temperature		−40		85	0		70	°C

electrical characteristics over recommended operating temperature range, $V_I = V_{IH}$ or V_{IL} (unless otherwise noted)

PARAMETER	TEST CONDITIONS	V_{CC}	T_A = 25°C			THCT29520E THCT29521E		THCT29520 THCT29521		UNIT
			MIN	TYP	MAX	MIN	MAX	MIN	MAX	
V_{OH}	I_{OH} = −20 μA	4.5 V	4.4	4.499		4.4		4.4		V
	I_{OH} = −8 mA	4.5 V	3.9	4.3		3.8		3.8		
V_{OL}	I_{OL} = 20 μA	4.5 V		0.001	0.1		0.1		0.1	V
	I_{OL} = 8 mA	4.5 V		0.17	0.26		0.33		0.33	
I_I	V_I = 0 to V_{CC}	5.5 V		±0.1	±100		±1000		±1000	nA
I_{OZ}	V_I = 0 or V_{CC}	5.5 V		±0.01	±0.5		±5		±5	μA
I_{CC}	V_I < 0.5 V or > 2.4 V, I_O = 0	4.5 V			8		80		80	μA
C_i		4.5 V to 5.5 V		3	10		10		10	pF

timing requirements over recommended operating free-air temperature range

PARAMETER		V_{CC}	T_A = 25°C			THCT29520E THCT29521E		THCT29520 THCT29521		UNIT
			MIN	TYP	MAX	MIN	MAX	MIN	MAX	
t_w	Pulse duration, CLK high or low	4.5 V		6		12		12		ns
		5.5 V		5		10		10		
t_{su}	Setup time before CLK↑	4.5 V		10		15		15		ns
		5.5 V		8		13		13		
t_h	Hold time after CLK↑	4.5 V		0		0		0		ns
		5.5 V		0		0		0		

switching characteristics over recommended free-air temperature range, $C_L = 50$ pF (unless otherwise noted) See Note 2

PARAMETER	FROM	TO	V_{CC}	$T_A = 25°C$			THCT29520E THCT29521E		THCT29520 THCT29521		UNIT
				MIN	TYP	MAX	MIN	MAX	MIN	MAX	
t_{pd}	CLK high	Y	4.5 V		18			27		26	ns
			5.5 V		16			25		24	
t_{pd}	S0, S1	Y	4.5 V		17			27		26	ns
			5.5 V		15			25		24	
t_{en}	$\overline{OE}$ low	Y	4.5 V		10			16		15	ns
			5.5 V		7			15		14	
t_{dis}	$\overline{OE}$ high	Y	4.5 V		14			20		20	ns
			5.5 V		13			20		20	
t_t		Y	4.5 V		7			12		12	ns
			5.5 V		7			12		12	

C_{pd}	Power dissipation capacitance†	No load, $T_A = 25°C$	110 pF typ

† No load dynamic power dissipation, $P_d = C_{pd} V_{CC}^2 f + I_{CC} V_{CC}$

NOTE 2: For load circuit and voltage waveforms, see page 1-14 of the *High-Speed CMOS Logic Data Book*, 1984.

PRODUCT PREVIEW

THCT2000M, THCT2000E DIRECTION DISCRIMINATORS

D2889, NOVEMBER 1985

- Inputs are TTL- and CMOS-Voltage Compatible
- Interfaces Mechanical Devices to Data Bus
- Identifies and Measures Forward or Backward Rotation or Direction
- Measures Pulse Duration and Frequency
- Cascadable 16-Bit Up/Down Counter
- 8-Bit Parallel 3-State Bus with Each Output Capable of Driving up to 15 LSTTL Loads
- Dependable Texas Instruments Quality and Reliability

THCT2000M . . . JD PACKAGE
THCT2000E . . . JD OR N PACKAGE
(TOP VIEW)

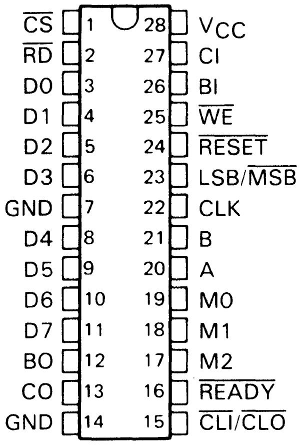
$\overline{\text{CS}}$ 1
$\overline{\text{RD}}$ 2
D0 3
D1 4
D2 5
D3 6
GND 7
D4 8
D5 9
D6 10
D7 11
BO 12
CO 13
GND 14
28 V_{CC}
27 CI
26 BI
25 $\overline{\text{WE}}$
24 $\overline{\text{RESET}}$
23 LSB/$\overline{\text{MSB}}$
22 CLK
21 B
20 A
19 M0
18 M1
17 M2
16 $\overline{\text{READY}}$
15 $\overline{\text{CLI}}$/$\overline{\text{CLO}}$

THCT2000M . . . FK PACKAGE
THCT2000E . . . FN PACKAGE
(TOP VIEW)

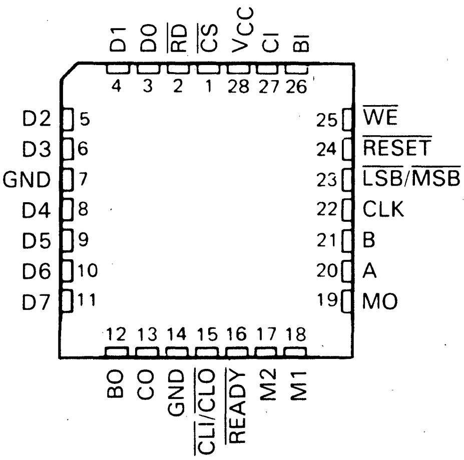
D1 4
D0 3
$\overline{\text{RD}}$ 2
$\overline{\text{CS}}$ 1
V_{CC} 28
CI 27
BI 26
D2 5
D3 6
GND 7
D4 8
D5 9
D6 10
D7 11
25 $\overline{\text{WE}}$
24 $\overline{\text{RESET}}$
23 LSB/$\overline{\text{MSB}}$
22 CLK
21 B
20 A
19 MO
12 BO
13 CO
14 GND
15 $\overline{\text{CLI}}$/$\overline{\text{CLO}}$
16 $\overline{\text{READY}}$
17 M2
18 M1

description

The THCT2000 direction discriminator can determine the direction and displacement of a mechanical device based on input signals from two transducers in quadrature. It can also measure a pulse duration using a known clock rate, or a frequency over a known time interval. It includes a 16-bit counter, which can be used separately. Several of these devices may be cascaded to provide accuracy greater than 16-bits.

The device may be used in many diverse applications, and is specifically designed for use in many types of microprocessor-based systems. Some of the possibilities include motor controls, robotics, tracker balls (mice), lathe or tooling machines, automobiles, and conveyer belts or other transport mechanisms.

The THCT2000M is characterized for operation over the full military temperature range of −55 °C to 125 °C. The THCT2000E is characterized for operation from −40 °C to 85 °C.

PRODUCT PREVIEW documents contain information on products in the formative or design phase of development. Characteristic data and other specifications are design goals. Texas Instruments reserves the right to change or discontinue these products without notice.

Copyright © 1985, Texas Instruments Incorporated

TEXAS INSTRUMENTS
POST OFFICE BOX 225012 • DALLAS, TEXAS 75265

architecture

There are four major functional blocks in the THCT2000. The measurement and mode-control logic generates internal up- or down-count pulses (I1 and I2) from the quadrature signals A and B, the clock input, and the mode controls M0, M1, and M2. The control logic provides common microprocessor interface signals. The output register latches the value of the counter. The output multiplexer allows the processor to read either the upper or lower byte in the register.

16-bit up/down counter, mode 0

In mode 0 the THCT2000 can be used as a 16-bit up/down counter. To use the THCT2000 as a 16-bit counter, the BI signal is high and a high-to-low transition at CI increments the counter. To count down, the CI signal is high and a high-to-low transition at BI decrements the counter. In this mode CLK does not have any effect on the contents of the counter. The counter can be preloaded using $\overline{\text{CS}}$, $\overline{\text{WE}}$, and LSB/$\overline{\text{MSB}}$.

direction discriminator, modes 1 through 5

In Figure 1, the quadrature signals A and B identify forward or backward directions. If A leads B, the forward direction is indicated and the counter will count up. If A lags B, the backward direction is indicated and the counter will count down.

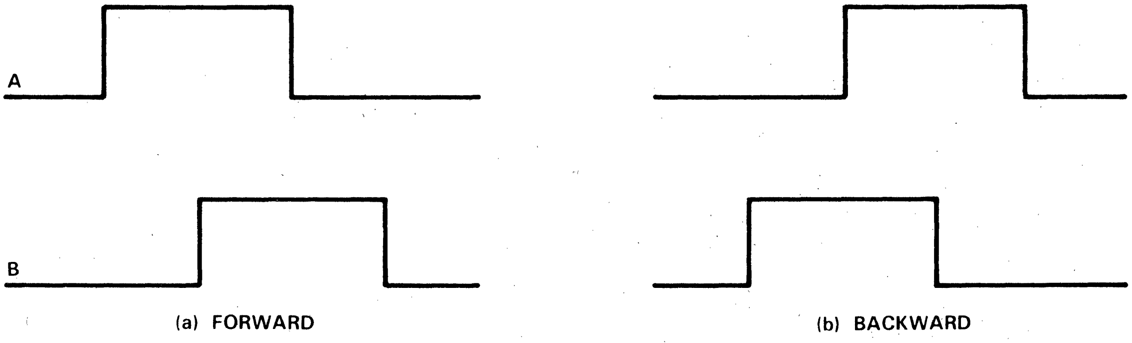

(a) FORWARD (b) BACKWARD

FIGURE 1. QUADRATURE SIGNALS

Signals A and B are each stored in the first of a pair of consecutive D-type flip-flops on a high-to-low transition of the clock and transferred to the next on a low-to-high transition of the clock. The THCT2000 measurement logic compares the states of the four D-type flip-flops and generates the correct up or down pulses for the user selected mode. (See Figures 2 and 3).

Modes 1 through 5 define which edge of the quadrature signals will be counted, in accordance with Table 1. The clock frequency should be at least four times greater than the frequencies of the quadrature signals. This will eliminate problems resulting from timing jitter in the transducer and will allow the quadruple counting mode to be used. The frequency of the quadrature signals A and B may be calculated from the relationship:

$$f = \frac{\text{shaft speed}}{\text{resolution of transducer}}$$

functional block diagram

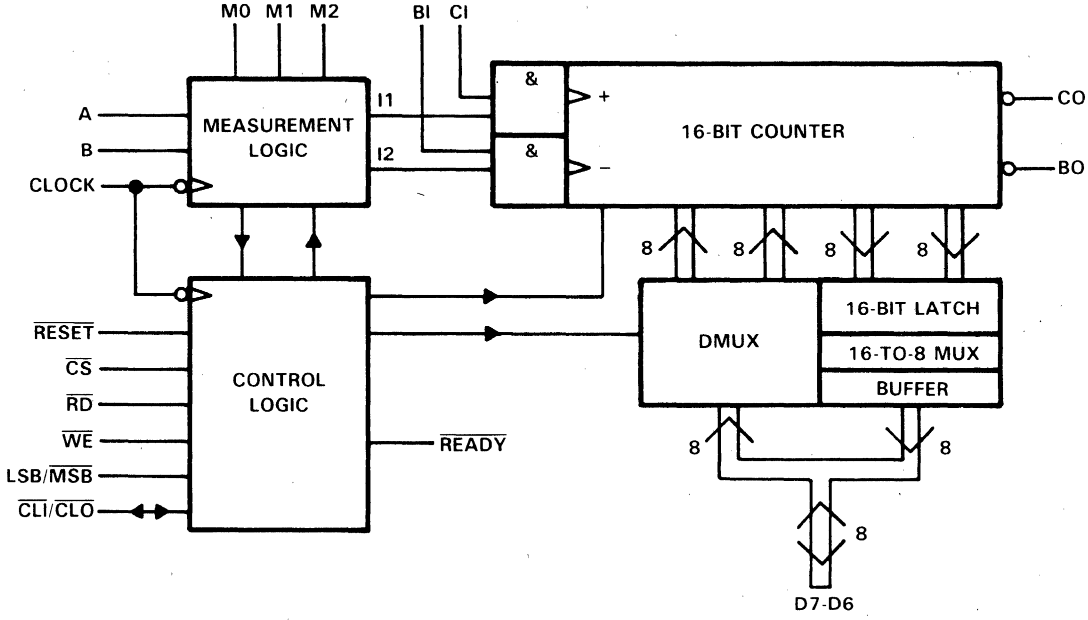

TABLE 1. MODE SELECTION

MODE	M2	M1	M0	MODE DESCRIPTION
				16-Bit Up/Down Counter
0	L	L	L	Falling transition on CI with BI high counts up. Falling transition on BI with CI high counts down.
				Direction Discriminator
1	L	L	H	A single-count pulse is generated on the first falling edge of CLK following A going high while B is low (corresponding to the forward direction) or A going low while B is low (corresponding to the backward direction) (see Figures 2 and 3).
2	L	H	L	A single-count pulse is generated on the first falling of CLK following B going high while A is high (corresponding to the forward direction) or B going low while A is high (corresponding to the backward direction) (see Figures 2 and 3).
3	L	H	H	A single-count pulse is generated on the first falling edge of CLK following A going high or going low (see Figures 2 and 3).
4	H	L	L	A single-count pulse is generated on the first falling edge of CLK following B going high or going low (see Figures 2 and 3).
5	H	L	H	A single-count pulse is generated on the first falling edge of CLK following either A or B going high or going low (see Figures 2 and 3).
				Pulse Duration Measurement
6	H	H	L	A is the count enable signal. B is high for upcounting and low for downcounting. Count is synchronous with rising edge of clock.
				Frequency Measurement
7	H	H	H	A is the signal frequency to be measured. B is the gate signal of known time interval. Count is synchronous with rising edge of A.

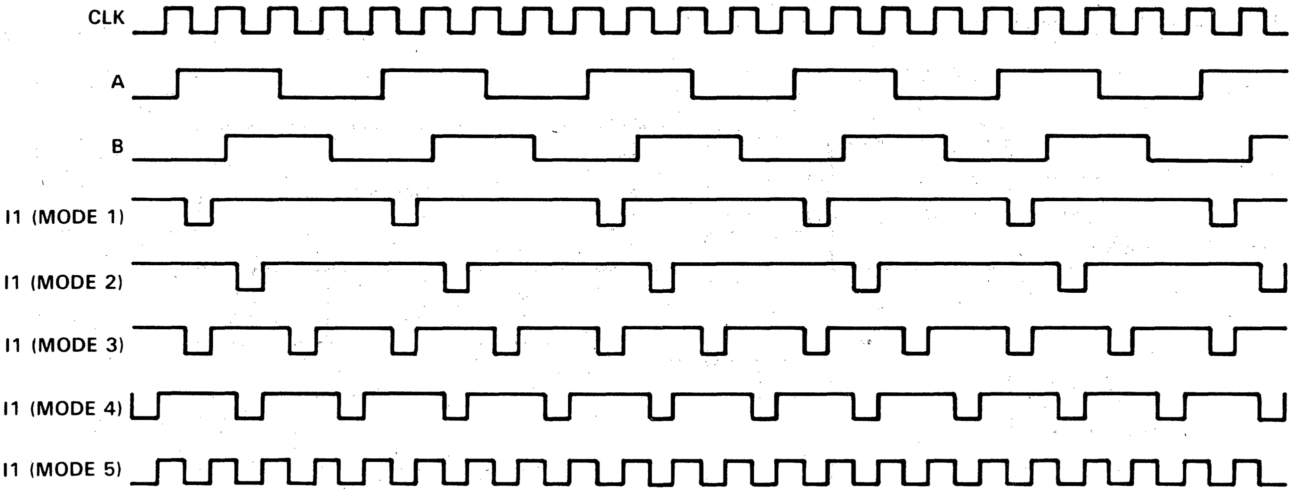
CLK
A
B
I1 (MODE 1)
I1 (MODE 2)
I1 (MODE 3)
I1 (MODE 4)
I1 (MODE 5)

NOTE: I1 is an internal clock signal for counting up.

FIGURE 2. DIRECTION DISCRIMINATOR—FORWARD DIRECTION

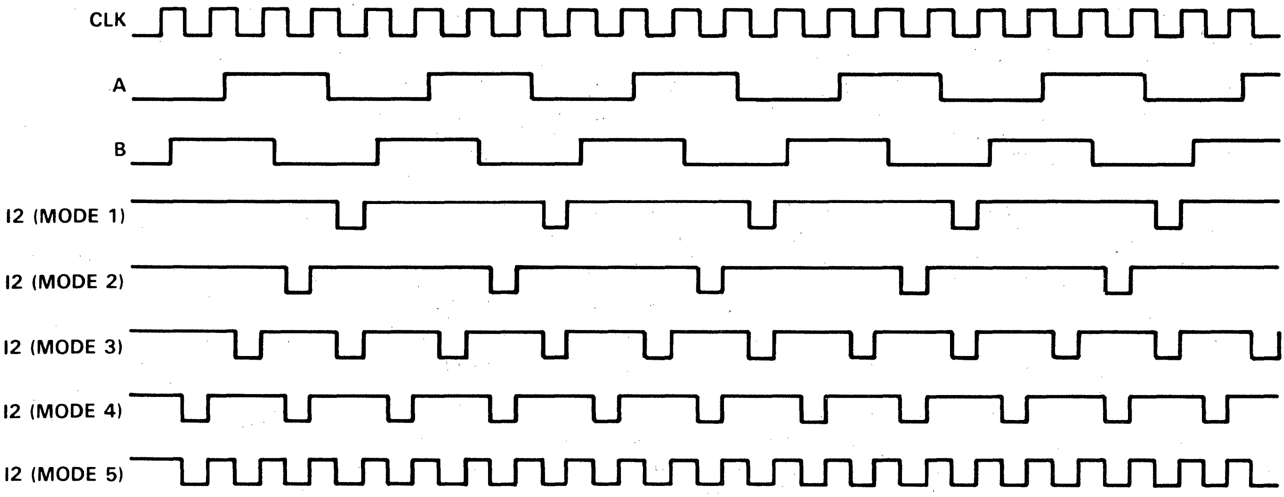
CLK
A
B
I2 (MODE 1)
I2 (MODE 2)
I2 (MODE 3)
I2 (MODE 4)
I2 (MODE 5)

NOTE: I2 is an internal clock signal for counting down.

FIGURE 3. DIRECTION DISCRIMINATOR—BACKWARD DIRECTION

pulse-duration measurement, mode 6

In this mode, A acts as the count enable input, and the duration of a high-level pulse applied to A can be measured. A transition from low to high on A will enable counting at the input clock frequency. A high-to-low transition will disable counting, load the value of the counter into the output register, pull $\overline{\mathrm{CLI}}/\overline{\mathrm{CLO}}$ low, and then clear the counter (see Figure 4). If B is held high the counter will count up, and if B is held low, the counter will count down.

The counter can be preloaded by activating $\overline{\mathrm{CS}}$, $\overline{\mathrm{WE}}$, and LSB/$\overline{\mathrm{MSB}}$; this must be done while A is low. The output register should be read by activating $\overline{\mathrm{CS}}$, $\overline{\mathrm{RD}}$, and LSB/$\overline{\mathrm{MSB}}$ after A has had a high-to-low transition. In other words, once the output register has been loaded with the contents of the counter (caused by a high-to-low transition on A), the contents of the output register can be read at any time before A has another high-to-low transition. The output register can only be loaded by the falling edge of A.

In the pulse-duration mode, the minimum time that can be measured is

$$t_{min} = \frac{2}{f_{clock}}$$

The pulse duration of A is

$$t_{wA} = \frac{N}{f_{clock}}$$

and the error is $\pm \dfrac{1}{f_{clock}}$

Where:

N = number of counts

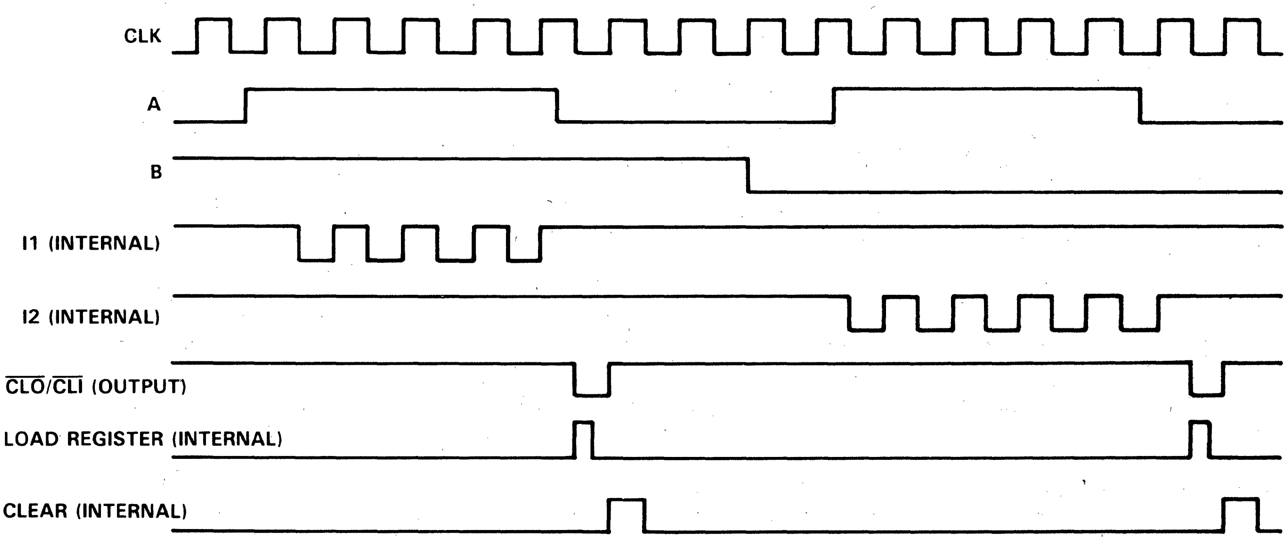

FIGURE 4. PULSE-DURATION MEASUREMENT (MODE 6)

frequency measurement, mode 7

In this mode, A is the signal of unknown frequency to be measured, and B is a gate signal of known duration. A low-to-high transition of B enables the counting at the frequency of A. A high-to-low transition of B disables the counting and the value of the counter is loaded into the output register, $\overline{\text{CLI}}/\overline{\text{CLO}}$ is pulled low, and the counter is cleared (see Figure 5).

The counter can be preloaded by activating $\overline{\text{CS}}$, $\overline{\text{WE}}$, and LSB/$\overline{\text{MSB}}$; this must be done while B is low. The output register should be read by activating $\overline{\text{CS}}$, $\overline{\text{RD}}$, and LSB/$\overline{\text{MSB}}$ after B has had a high-to-low transition. In other words, once the output register has been loaded with the contents of the counter (caused by a high-to-low transition on B), the contents of the output register can be read at any time before B has another high-to-low transition. The output register can only be loaded by the falling edge of B.

The maximum frequency that can be measured is

$$f = \frac{f_{clock}}{2}$$

The minimum time A must remain high is

$$t_{wA} = \frac{2}{f_{clock}}$$

and the frequency of A is

$$f_A = \frac{N}{t_{wB}}$$

Where:

N = number of counts
t_{wB} = pulse duration of B

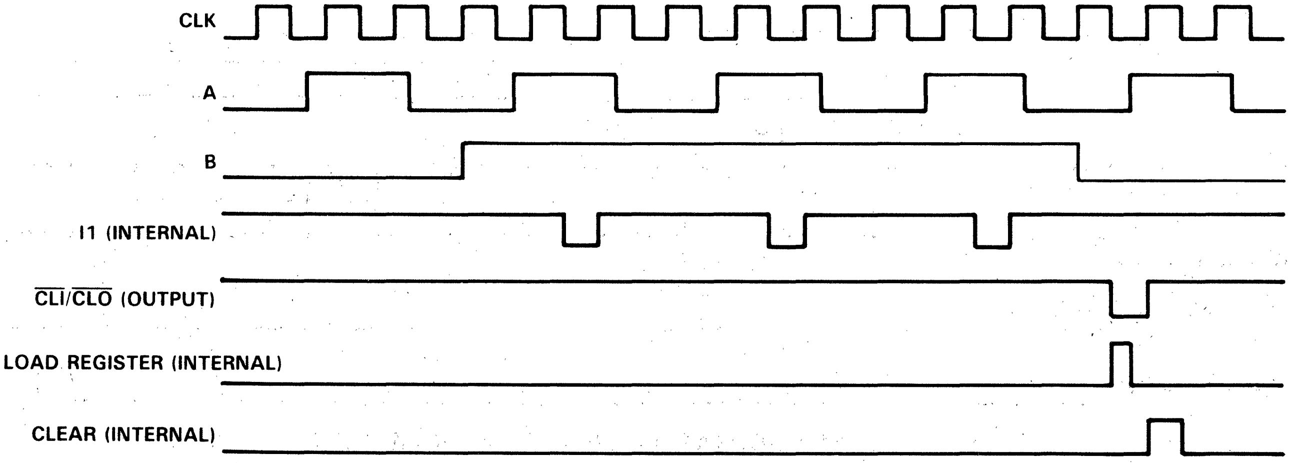

FIGURE 5. FREQUENCY MEASUREMENT (MODE 7)

read operation

The contents of the counter can be read at any time while in modes 0 through 5 by pulling $\overline{CS}$ and $\overline{RD}$ low. The most significant byte may be selected by setting LSB/$\overline{MSB}$ low, and the least significant byte may be read by setting LSB/$\overline{MSB}$ high. This will cause a load-output-register pulse to be generated and $\overline{CLI}/\overline{CLO}$ will go low during the next low clock phase. $\overline{READY}$ will also go low as the clock goes low, and will stay low until $\overline{CS}$ and/or $\overline{RD}$ go high. The load-output-register pulse stores the current value of the counter in a 16-bit latch register and LSB/$\overline{MSB}$ directs the proper byte through a multiplexer to the outputs. $\overline{CS}$ and $\overline{RD}$ also enable the 3-state outputs (See Figure 6).

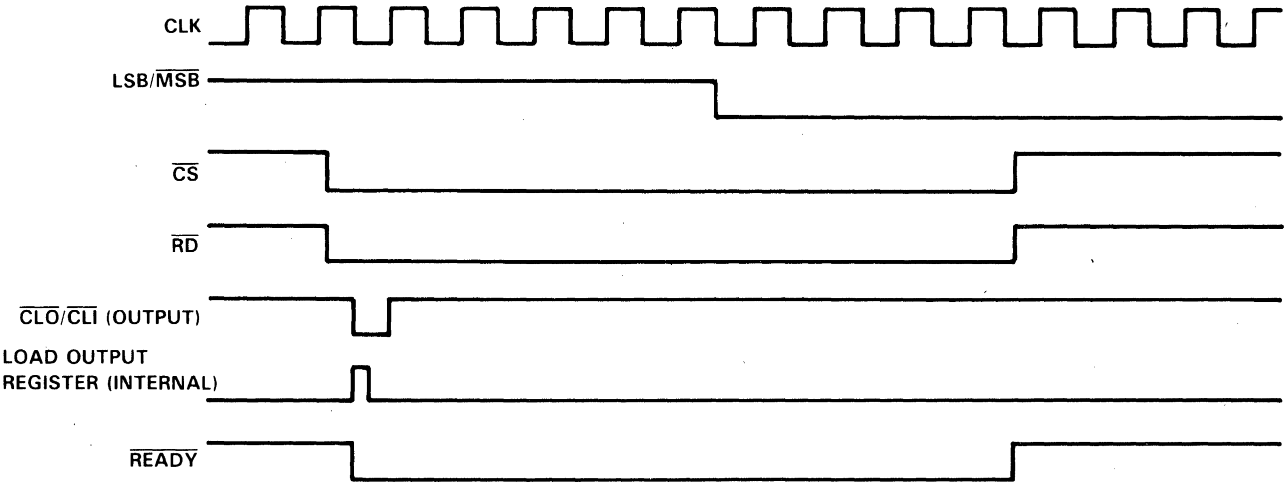
CLK
LSB/$\overline{MSB}$
$\overline{CS}$
$\overline{RD}$
$\overline{CLO}/\overline{CLI}$ (OUTPUT)
LOAD OUTPUT REGISTER (INTERNAL)
$\overline{READY}$

FIGURE 6

There are two sets of conditions that will cause the load-output-register pulse to be inhibited:

1. After a reset has occurred, the first time $\overline{CS}$ goes low the value of LSB/$\overline{MSB}$ will set a latch within the device. From that time until the next reset, LSB/$\overline{MSB}$ must be that same value in order to trigger the load-output-register pulse during a read operation. If the value of LSB/$\overline{MSB}$ is the opposite to the value stored in the latch, the load pulse will be inhibited, and the pulse will not be generated until a new read cycle is initiated with LSB/$\overline{MSB}$ properly applied. Holding LSB/$\overline{MSB}$ at the inhibiting level will also keep $\overline{CLI}/\overline{CLO}$ from loading the output register. Thus, the high and low bytes should always be read in the same order. This is to control unwanted load-output-register pulses.
2. Every time $\overline{CS}$ and $\overline{RD}$ go low after $\overline{CLI}/\overline{CLO}$ has been externally pulled low, and until a reset occurs, the load-output-register pulse will be inhibited to allow the data loaded to be read.

In modes 0 through 5 the output register will be loaded immediately if $\overline{CLI}/\overline{CLO}$ is pulled low. Every time $\overline{CS}$ and $\overline{RD}$ go low following $\overline{CLI}/\overline{CLO}$ going low, and until a reset occurs, the load-output-register operation will be inhibited. Thus, the value stored in the register by $\overline{CLI}/\overline{CLO}$ can be read. This is important in allowing the device to be cascaded (See Figure 7). It is important that $\overline{CLI}/\overline{CLO}$ never goes falsely low.

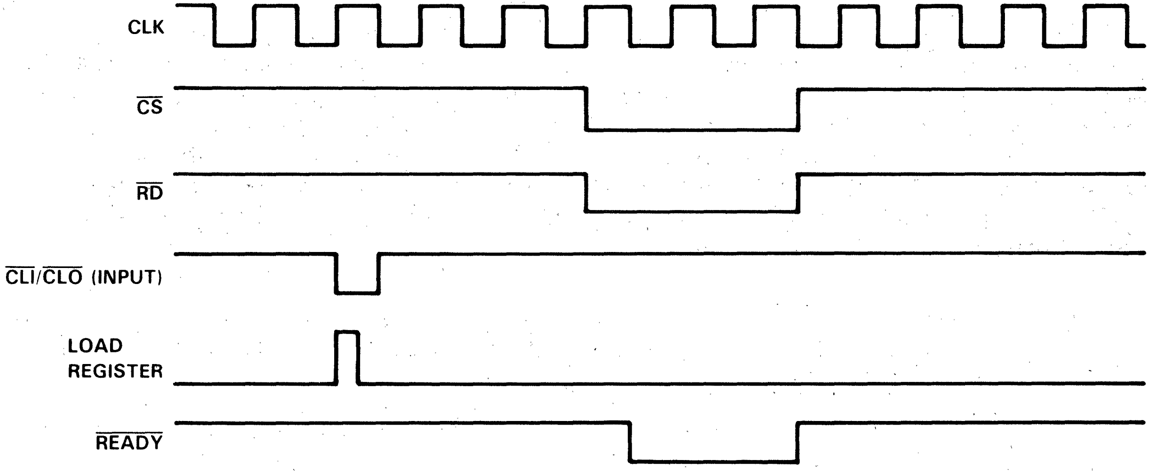
CLK
$\overline{\text{CS}}$
$\overline{\text{RD}}$
$\overline{\text{CLI}}/\overline{\text{CLO}}$ (INPUT)
LOAD REGISTER
$\overline{\text{READY}}$

FIGURE 7

write operation

A number may be preloaded into the counter by pulling $\overline{\text{CS}}$ and $\overline{\text{WE}}$ low while using LSB/$\overline{\text{MSB}}$ to direct the value on the data bus to the selected byte of the counter. This will cause $\overline{\text{READY}}$ to go low on the next falling clock edge, and to remain low until $\overline{\text{CS}}$ and $\overline{\text{WE}}$ go high.

reset operation

A reset is initiated by pulling the $\overline{\text{RESET}}$ pin low. This clears the counter to zero, resets the D-type flip-flops at the inputs of the quadrature signals A and B, and clears the latches that inhibit the load register pulse (see Figure 8). To avoid a spurious count after a reset, the A and B inputs should be held to the values indicated in Table 2 during and just after the reset pulse. The reset pin does not clear the output register.

TABLE 2

MODE	A	B
0	X	X
1 – 5	H	H
6 – 7	L	L

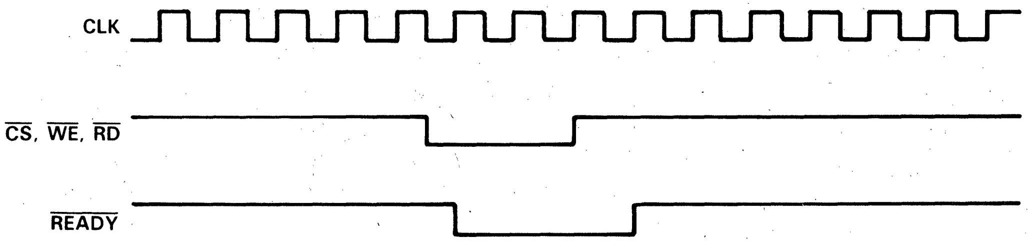
CLK
$\overline{\text{CS}}$, $\overline{\text{WE}}$, $\overline{\text{RD}}$
$\overline{\text{READY}}$

FIGURE 8

TOSHIBA

THE POWER IN LOGIC

STANDARD CMOS FAMILY / TC4000/4500 FAMILY

NAME	FUNCTION	NO. OF PIN
TC4000BP	Dual 3-input positive NOR gate + inverter	14
TC4001BP/BF	Quad 2-input positive NOR gate	14
TC4001UBP	Quad 2-input positive NOR gate	14
TC4002BP/BF	Dual 4-input positive NOR gate	14
TC4006BP	18-stage static shift register	14
TC4007UBP	Dual complementary pair + inverter	14
TC4008BP	4-bit full adder	16
TC4009UBP	Hex inverting buffer/converter	16
TC4010BP	Hex non-inverting buffer/converter	16
TC4011BP/BF	Quad 2-input positive NAND gate	14
TC4011UBP	Quad 2-input positive NAND gate	14
TC4012BP/BF	Dual 4-input positive NAND gate	14
TC4013BP/BF	Dual D-type master slave flip flop	14
TC4014BP	8-stage static shift register	16
TC4015BP/BF	Dual 4-stage static shift register	16
TC4016BP/BF	Quad bilateral switch	14
TC4017BP/BF	Decade counter divider	16
TC4018BP	Presettable divide-by-N counter	16
TC4019BP/BF	Quad AND-OR select gate	16
TC4020BP/BF	14-stage ripple carry binary counter/divider	16
TC4021BP	8-stage static shift register	16
TC4022BP	Divide-by-8 counter/divider	16
TC4023BP/BF	Triple 3-input positive NAND gate	14
TC4024BP/BF	7-stage ripple carry binary counter	14
TC4025BP/BF	Triple 3-input positive NOR gate	14
TC4027BP/BF	Dual J-K master slave flip flop	16
TC4028BP/BF	BCD to decimal decoder	16
TC4029BP	Presettable up/down counter	16
TC4030BP/BF	Quad exclusive-or gate	14
TC4032BP	Triple position serial adder	16
TC4034BP	8-stage bidirectional bus register	24
TC4035BP	4-stage static shift register	16
TC4036BP	4-word 8-bit static RAM	24
TC4038BP	Triple negative serial adder	16
TC4039BP	4-word by 8-bit static RAM	24
TC4040BP/BF	12-stage ripple carry binary counter	16
TC4042BP/BF	Quad D-type latch	16
TC4043BP	Quad positive NOR R-S latch	16
TC4044BP/BF	Quad positive NAND R-S latch	16
TC4047BP	Monostable/astable multivibrator	14
TC4049BP/BF	Hex inverting buffer/converter	16
TC4050BP/BF	Hex non-inverting buffer/converter	16
TC4051BP/BF	8-channel analog multiplexer	16
TC4052BP/BF	Dual 4-channel analog multiplexer	16
TC4053BP/BF	Triple 2-channel analog multiplexer	16
TC4054BP	4-line LCD driver	16
TC4055BP	BCD to 7-segment LCD driver	16
TC4056BP/BF	BCD to 7-segment LCD driver	16
TC4063BP/BF	4-bit magnitude comparator	16
TC4066BP/BF	Quad bilateral switch	14
TC4068BP/BF	8-input positive NAND/AND gate	14
TC4069UBP/UBF	Hex inverter	14
TC4071BP/BF	Quad 2-input positive OR gate	14
TC4072BP/BF	Dual 4-input positive OR gate	14
TC4073BP/BF	Triple 3-input positive AND gate	14
TC4075BP/BF	Triple 3-input positive OR gate	14
TC4076BP	4-bit D-type register with 3-stage output	16
TC4077BP/BF	Quad exclusive NOR gate	14
TC4078BP/BF	8-input positive NOR/OR gate	14
TC4081BP/BF	Quad 2-input positive AND gate	14
TC4082BP	Dual 4-input positive AND gate	14
TC4085BP	Dual 2-wire 2-input AND-OR invert gate	14
TC4086BP	4-wide 2-input AND-OR invert gate	14
TC4093BP/BF	Quad 2-input NAND schmitt trigger	14
TC4094BP/BF	8-stage shift and store bus register	16
TC4099BP/BF	8-bit addressable latch	16
TC40102BP	Programmable dual BCD down counter	16
TC40103BP	Programmable 8-bit binary down counter	16
TC40104BP	4-stage universal shift register	16
TC40107BP	Dual 2-input NAND buffer/driver	8
TC40117BP	Programmable dual 4-bit terminator	14
TC40160BP	Decade counter with asynchronous clear	16
TC40161BP	Binary counter with asynchronous clear	16
TC40162BP	Decade counter with synchronous clear	16
TC40163BP	Binary counter with synchronous clear	16
TC40174BP/BF	Hex D-type flip flop	16
TC40175BP/BF	Quad D-type flip flop	16
TC40192BP	Presettable 4-bit BCD up/down counter	16
TC40193BP	Presettable 4-bit binary up/down counter	16
TC40194BP	4-stage universal shift register	16
TC4501BP	Triple Gate (dual 4 input NAND + 2 Input NOR/OR)	16
TC4502BP	Strobed hex inverter/buffer	16
TC4508BP	Dual 4-bit latch	24
TC4510BP/BF	Presettable up/down decade counter	16
TC4511BP/BF	BCD to 7-segment LED driver	16

TOSHIBA AMERICA, INC.
2692 DOW AVE., TUSTIN, CALIF. 92680 PHONE: 714-832-6300 TELEX: 314-138

FOR COMPLETE DATA SHEET, Call 800-443-0100, Ext. 518

THE POWER IN LOGIC **TOSHIBA**

STANDARD CMOS FAMILY / TC4000/4500 FAMILY

NAME	FUNCTION	NO. OF PIN
TC4512BP/BF	8-Channel data selector	16
TC4514BP	4-bit latch/4 to 16-line decoder (high)	24
TC4515BP	4-bit latch/4 to 16-line decoder (low)	24
TC4516BP/BF	Presettable up/down binary counter	16
TC4518BP/BF	Dual BCD up counter	16
TC4519BP	4-bit AND-OR select gate	16
TC4520BP/BF	Dual binary up counter	16
TC4521BP	24-stage frequency driver	16
TC4522BP	Programmable Divide-by-N BCD counter	16
TC4526BP/BF	Programmable Divide-by-N binary counter	16
TC4527BP	BCD rate multiplier	16
TC4528BP/BF	Dual monostable multivibrator	16

NAME	FUNCTION	NO. OF PIN
TC4530BP	Dual 5-input majority logic gate	16
TC4531BP	12-bit parity tree	16
TC4532BP	8-bit priority encoder	16
TC4538BP/BF	Dual precision monostable multivibrator	16
TC4539BP/BF	Dual 4-channel data selector/multiplexer	16
TC4543BP/BF	BCD to 7-segment LCD driver	16
TC4555BP	Dual binary to 1-of-4 decoder (high)	16
TC4556BP/BF	Dual binary to 1-of-4 decoder (low)	16
TC4560BP	NBCD adder	16
TC4561BP	9's complementer	14
TC4572BP/BF	Hex gate	16
TC4583BP	Dual schmitt trigger	16
TC4584BP/BF	Hex schmitt trigger	14
TC4585BP	4-bit magnitude comparator	16

HIGH SPEED CMOS FAMILY / TC40H/50H FAMILY

NAME	FUNCTION	NO. OF PIN
TC40H000P/F	Quad 2-input NAND gate	14
TC40H002P/F	Quad 2-input NOR gate	14
TC40H004P/F	Hex inverter	14
TC40H008P/F	Quad 2-input AND gate	14
TC40H010P/F	Triple 3-input NAND gate	14
TC40H011P/F	Triple 3-input AND gate	14
TC40H020P/F	Dual 4-input NAND gate	14
TC40H021P/F	Dual 4-input AND gate	14
TC40H027P/F	Triple 3-input NOR gate	14
TC40H032P/F	Quad 2-input OR gate	14
TC40H042P/F	BCD-to-decimal decoder driver	16
TC40H051P/F	Dual AND-OR-INVERT gate	14
TC40H074P/F	Dual "D" type flip flop	14
TC40H076P/F	Dual J-K flip flop (pulse trigger)	16
TC40H076AP/AF	Dual J-K flip flop (edge trigger)	16
TC40H107P/F	Dual J-K flip flop (pulse trigger)	14
TC40H107AP/AF	Dual J-K flip flop (edge trigger)	14
TC40H138P/F	3-to-8 line decoder demultiplexer	16
TC40H139P/F	Dual 2-to-4 line decoder demultiplexer	16
TC40H147P/F	10 line-to-4 line priority encoder	16
TC40H148P/F	8 line-to-3 line priority encoder	16
TC40H151P/F	1-of-8 data selector multiplexer	16
TC40H153P/F	Dual 4-to-1 line data selector multiplexer	16
TC40H155P/F	Dual 2-to-4 line decoder demultiplexer	16
TC40H157P/F	Quad 2-to-1 line data selector multiplexer	16
TC40H158P/F	Quad 2-to-1 line data selector multiplexer	16
TC40H160P/F	Synchronous BCD decade counter	16
TC40H161P/F	Synchronous 4-bit binary counter	16

NAME	FUNCTION	NO. OF PIN
TC40H162P/F	Synchronous BCD decade counter	16
TC40H163P/F	Synchronous 4-bit binary counter	16
TC40H164P/F	8-bit shift register (S-I, P-O)	16
TC40H166P/F	8-bit shift register (P-I, S-O)	16
TC40H174P/F	Hex "D" type flip flop	16
TC40H175P/F	Quad "D" type flip flop	16
TC40H192P/F	Synchronous BCD up/down counter	16
TC40H193P/F	Synchronous binary up/down counter	16
TC40H194P/F	4-bit bidirectional universal shift register	16
TC40H240P/F	Octal buffer/driver	20
TC40H241P/F	Octal buffer/driver	20
TC40H242P/F	Quad bidirectional bus buffer	14
TC40H243P/F	Quad bidirectional bus buffer	14
TC40H244P/F	Octal buffer driver	20
TC40H245P/F	Octal bidirectional bus buffer	20
TC40H259P/F	8-bit addressable latch	16
TC40H273P/F	Octal "D" type flip flop	20
TC40H365P/F	Hex bus buffer	16
TC40H366P/F	Hex bus buffer	16
TC40H367P/F	Hex bus buffer	16
TC40H368P/F	Hex bus buffer	16
TC40H373P/F	Octal "D" type latch	20
TC40H374P/F	Octal "D" type flip flop	20
TC40H375P/F	Quad 4-bit latch	16
TC40H386P/F	Quad 2-input exclusive gate	14
TC40H390P/F	Dual decade counter	16
TC40H393P/F	Dual 4-bit binary counter	14
TC50H000P/F	Hex buffer (TC4049B type)	16
TC50H001P/F	Hex buffer (TC4050B type)	16
TC50H4066P/F	Quad bilateral switch	14

TOSHIBA AMERICA, INC.

2692 DOW AVE., TUSTIN, CALIF. 92680 PHONE: 714-832-6300 TELEX: 314-138

FOR COMPLETE DATA SHEET, Call 800-443-0100, Ext. 518

HIGH SPEED C²MOS FAMILY / TC74HC FAMILY

NAME	FUNCTION	NO. OF PIN
TC74HC00P/F	Quad 2-input NAND gate	14
TC74HC02P/F	Quad 2-input NOR gate	14
TC74HC03P	Quad 2-input NAND (open drain)	14
TC74HC04P/F	Hex inverter	14
TC74HCT04P	Hex inverter	14
TC74HCU04P/F	Hex inverter (unbuffered)	14
TC74HCT7007P/F	Hex buffer	14
TC74HC08P/F	Quad 2-input AND gate	14
TC74HC10P/F	Triple 3-input NAND gate	14
TC74HC11P/F	Triple 3-input AND gate	14
TC74HC14P/F	Hex schmitt inverter	14
TC74HC20P/F	Dual 4-input NAND gate	14
TC74HC21P/F	Dual 4-input AND gate	14
TC74HC27P/F	Triple 3-input NOR gate	14
TC74HC30P/F	8-input NAND gate	14
TC74HC32P/F	Quad 2-input OR gate	14
TC74HC42P/F	BCD to decimal decoder	16
TC74HC51P/F	Dual 2w-21 AND/OR invert gate	14
TC74HC73P	Dual J-K flip flop	14
TC74HC74P/F	Dual D-type flip flop	14
TC74HC75P/F	Quad D-type latch	16
TC74HC76P/F	Dual J-K flip flop	16
TC74HC77P	Quad D-type latch	14
TC74HC85P/F	4-bit magnitude comparator	16
TC74HC86P/F	Quad exclusive OR gate	14
TC74HC107P/F	Dual J-K flip flop	14
TC74HC109P	Dual J-K flip flop	16
TC74HC112P/F	Dual J-K flip flop	16
TC74HC113P	Dual J-K flip flop	14
TC74HC123P/F	Dual monostable multivibrator	16
TC74HC125P	Quad bus buffer	14
TC74HC126P	Quad bus buffer	14
TC74HC131P	3-to-8 line decoder/latch	16
TC74HC132P/F	Quad 2-input schmitt NAND	14
TC74HC133P	13-input NAND gate	16
TC74HC137P/F	3-to-8 line decoder/latch	16
TC74HCT137P	3-to-8 line decoder/latch	16
TCC4HC138P/F	3-to-8 line decoder	16
TC74HCT138P	3-to-8 line decoder	16
TC74HC139P/F	Dual 2-to-4 line decoder	16
TC74HC147P	10-to-4 line priority encoder	16
TC74HC148P	8-to-3 line priority encoder	16
TC74HC151P/F	8-to-1 line multiplexer	16
TC74HC153P/F	Dual 4-to-1 multiplexer	16
TC74HC154P	4-to-16 line decoder	24

NAME	FUNCTION	NO. OF PIN
TC74HC155P	Dual 2-to-4 line decoder	16
TC74HC157P/F	Quad 2-to-1 multiplexer	16
TC74HC158P/F	Quad 2-to-1 multiplexer (inverting)	16
TC74HC160P/F	Sync. decade counter	16
TC74HC161P/F	Sync. binary counter	16
TC74HC162P	Sync. decade counter	16
TC74HC163P/F	Sync. binary counter	16
TC74HC164P/F	8-bit sipo shift register	14
TC74HC165P/F	8-bit piso shift register	16
TC74HC166P	8-bit piso shift register	16
TC74HC173P/F	Quad D-type register (3-state)	16
TC74HC174P/F	Hex D-type flip flop	16
TC74HC175P/F	Quad D-type flip flop	16
TC74HC181P	Arithmetic logic unit	24
TC74HC182P	Look ahead carry logic	16
TC74HC190P	BCD up/down counter	16
TC74HC191P	4-bit binary up/down counter	16
TC74HC192P/F	Sync. up/down decade counter	16
TC74HC193P/F	Sync. up/down binary counter	16
TC74HC194P/F	4-bit pipo shift register	16
TC74HC195P	4-bit pipo shift register	16
TC74HC221P	Dual monostable multivibrator	16
TC74HC237P/F	3-to-8 line decoder/latch	16
TC74HC238P	3-to-8 line decoder	24
TC74HC240P/F	Octal bus buffer (inverting)	20
TC74HCT240P	Octal bus buffer (inverting)	20
TC74HC241P	Octal bus buffer	20
TC74HCT241P	Octal bus buffer	20
TC74HC242P	Quad bus transceiver	14
TC74HC243P	Quad bus transceiver	14
TC74HC244P/F	Octal bus buffer	20
TC74HCT244P	Octal bus buffer	20
TC74HC245P	Octal bus transceiver	20
TC74HCT245P	Octal bus transceiver	20
TC74HC251P/F	8-to-1 line multiplexer (3-state)	16
TC74HC253P/F	Dual 4-to-1 multiplexer (3-state)	16
TC74HC257P/F	Quad 2-to-1 multiplexer (3-state)	16
TC74HC258P/F	Quad 2-to-1 multiplexer (3-state/inv.)	16
TC74HC259P/F	8-bit addressable latch	16
TC74HC7266P	Quad exclusive NOR gate	14
TC74HC273P/F	Octal D-type flip flop	20
TC74HC279P	Quad S-R latch	16
TC74HC280P	9-bit parity generator	14
TC74HC283P	4-bit binary full adder	16
TC74HC7292P	Programmable divider/timer	16

TOSHIBA AMERICA, INC.
2692 DOW AVE., TUSTIN, CALIF. 92680 PHONE: 714-832-6300 TELEX: 314-138

THE POWER IN LOGIC

TOSHIBA

HIGH SPEED C²MOS FAMILY / TC74HC FAMILY

NAME	FUNCTION	NO. OF PIN
TC74HC7294P	Programmable divider/timer	16
TC74HC298P	Quad 2-channel multiplexer/register	16
TC74HC299P	8-bit pipo shift register	20
TC74HC323P	8-bit pipo shift register	20
TC74HC354P	8-input multiplexer	20
TC74HC356P	8-input multiplexer	20
TC74HC365P/F	Hex bus buffer	16
TC74HC366P/F	Hex bus buffer (inverting)	16
TC74HC367P/F	Hex bus buffer	16
TC74HC368P/F	Hex bus buffer (inverting)	16
TC74HC373P/F	Octal D-type latch (3-state)	20
TC74HCT273P/F	Octal D-type latch (13-state)	20
TC74HC374P/F	Octal D-type flip flop (3-state)	20
TC74HCT374P	Octal D-type flip flop (3-state)	20
TC74HC375P/F	Quad D-type latch	16
TC74HC377P	Octal D-type flip flop	20
TC74HC386P/F	Quad exclusive OR gate	14
TC74HC390P	Dual decade counter	16
TC74HC393P	Dual binary counter	14
TC74HC423P	Dual monostable multivibrator	16
TC74HC533P	Octal D-type latch (3-state/inv.)	20
TC74HC534P	Octal D-type flip flop (3-state/inv.)	20
TC74HC540P	Octal bus buffer	20
TC74HCT540P	Octal bus buffer	20
TC74HC541P	Octal bus buffer	20
TC74HCT541P	Octal bus buffer	20
TC74HC563P/F	Octal D-type latch (3-state/inv.)	20
TC74HCT563P	Octal D-type latch (3-state/inv.)	20
TC74HC564P/F	Octal D-type flip flop (3-state/inv.)	20
TC74HCT564P	Octal D-type flip flop (3-state/inv.)	20
TC74HC573P/F	Octal D-type latch (3-state)	20
TC74HC573P	Octal D-type latch (3-state)	20
TC74HC574P/F	Octal D-type flip flop (3-state)	20
TC74HCT574P	Octal D-type flip flop (3-state)	20
TC74HC590P	8-bit binary counter/register (3-state)	16
TC74HC592P	8-bit register/binary counter	16
TC74HC593P	8-bit register/binary counter (3-state)	20
TC74HC595P	8-bit shift register/latch (3-state)	16
TC74HC597P	8-bit latch shift register	16
TC74HC620P	Octal bus transceiver	20
TC74HC623P	Octal bus transceiver	20
TC74HC640P	Octal bus transceiver	20
TC74HCT640P	Octal bus transceiver	20
TC74HC643P	Octal bus transceiver	20
TC74HCT643P	Octal bus transceiver	20

NAME	FUNCTION	NO. OF PIN
TC74HC646P	Octal bus transceiver/register	24
TC74HCT646P	Octal bus transceiver/register	24
TC74HC648P	Octal bus transceiver/register	24
TC74HCT648P	Octal bus transceiver/register	24
TC74HC651P	Octal bus transceiver/register	24
TC74HCT651P	Octal bus transceiver/register	24
TC74HC652P	Octal bus transceiver/register	24
TC74HCT652P	Octal bus transceiver/register	24
TC74HC670P	4 word x 4-bit register file (3-state)	16
TC74HC688P	8-bit-equality comparator	20
TC74HC690P	Decade counter/register (3-state)	20
TC74HC691P	4-bit binary counter/register (3-state)	20
TC74HC692P	Decade counter/register (3-state)	20
TC74HC693P	4-bit binary counter/register (3-state)	20
TC74HC696P	U/D decade counter/register (3-state)	20
TC74HC697P	U/D 4-bit binary ctr/register (3-state)	20
TC74HC698P	U/D decade counter/register (3-state)	20
TC74HC699P	U/D 4-bit binary ctr/register (3-state)	20
TC74HC4002P	Dual 4-input NOR gate	14
TC74HC4017P/F	Decade counter divider	16
TC74HC4020P/F	14-stage binary counter	16
TC74HC4022P	Octal counter/divider	16
TC74HC4024P	7-stage binary counter	14
TC74HC4028P/F	BCD-to-decimal decoder	16
TC74HC4040P/F	12-stage binary counter	16
TC74HC4049P/F	Hex buffer (inverting)	16
TC74HC4050P/F	Hex buffer	16
TC74HC4051P	8-channel analog multiplexer	16
TC74HC4052P	Dual 4-channel analog multiplexer	16
TC74HC4053P	Triple 2-channel analog multiplexer	16
TC74HC4060P	14-stage binary counter/oscillator	16
TC74HC4066P/F	Quad bilateral switch	14
TC74HC4072P	Dual 4-input OR gate	14
TC74HC4075P	Triple 3-input OR gate	14
TC74HC4078P	8-input OR/NOR gate	14
TC74HC4094P/F	8-bit sipo shift register/latch (3-state)	16
TC74HC40102P	Dual BCD programmable down counter	16
TC74HC40103P	8-bit binary programmable down counter	16
HC74HC4511P/F	BCD-to-7-segment L/D/D (LED)	16
TC74HC4514P	4-to-16 line decoder/latch	24
TC74HC4515P	4-to-16 line decoder/latch	24
TC74HC4518P	Dual decoder counter	16
TC74HC4520P/F	Dual 4-bit binary counter	16
TC74HC4538P/F	Dual monostable multiplexer	16
TC74HC4543P/F	BCD-to-7-segment L/D/D (LCD)	16

TOSHIBA AMERICA, INC.

2692 DOW AVE., TUSTIN, CALIF. 92680 PHONE: 714-832-6300 TELEX: 314-138

FOR COMPLETE DATA SHEET, Call 800-443-0100, Ext. 518

V54/74 A•C•T INTERFACE LOGIC FAMILY

VTC Incorporated

VTC'S V54/74 "A•C•T" Family gives you **A**LS speed, **C** MOS power, and **T**TL drive.
It's the coolest new family of interface functions: state-of-the-art interfaces for the latest microprocessors, memories, and gate arrays. True third-generation logic functions featuring an advanced 1.6 micron, double level metal CMOS process.
Fifty TTL-compatible functions include 8, 9 and 10-bit buffers, latches, flip-flops, and transceivers.
VTC's A•C•T Family: the new standard in interface functions.

A•C•T INTERFACE FAMILY STATUS GUIDE			74P-Dip	54Cerdip	MIL-STD-883	74SOIC	54LCC
54/74ACT240	20	Octal Buffers and Line Drivers	now	now	2H86	2Q86	2Q86
54/74ACT241	20	Octal Buffers and Line Drivers	now	now	2H86	2Q86	2Q86
54/74ACT244	20	Octal Buffers and Line Drivers	now	now	2H86	2Q86	2Q86
54/74ACT245	20	Octal Bus Transceivers	now	now	2H86	2Q86	2Q86
54/74ACT373	20	Octal D-Type Transparent Latches	now	now	2H86	2Q86	2Q86
54/74ACT374	20	Octal D-Type Edge-Triggered Flip-Flops	now	now	2H86	2Q86	2Q86
54/74ACT465	20	Octal Buffers and Line Drivers	now	now	2H86	2Q86	2Q86
54/74ACT466	20	Octal Buffers and Line Drivers	now	now	2H86	2Q86	2Q86
54/74ACT467	20	Octal Buffers and Line Drivers	now	now	2H86	2Q86	2Q86
54/74ACT468	20	Octal Buffers and Line Drivers	now	now	2H86	2Q86	2Q86
54/74ACT533	20	Octal D-Type Transparent Latches	now	now	2H86	2Q86	2Q86
54/74ACT534	20	Octal D-Type Edge-Triggered Flip-Flops	now	now	2H86	2Q86	2Q86
54/74ACT540	20	Octal Buffers and Line Drivers	2Q86	2Q86	2H86	2Q86	2Q86
54/74ACT541	20	Octal Buffers and Line Drivers	2Q86	2Q86	2H86	2Q86	2Q86
54/74ACT563	20	Octal D-Type Transparent Latches	2Q86	2Q86	2H86	2Q86	2Q86
54/74ACT564	20	Octal D-Type Edge-Triggered Flip-Flops	2Q86	2Q86	2H86	2Q86	2Q86
54/74ACT573	20	Octal D-Type Transparent Latches	2Q86	2Q86	2H86	2Q86	2Q86
54/74ACT574	20	Octal D-Type Edge-Triggered Flip-Flops	2Q86	2Q86	2H86	2Q86	2Q86
54/74ACT575	24	Octal D-Type Edge-Triggered Flip-Flops	2Q86	2Q86	2H86	2Q86	2Q86
54/74ACT576	20	Octal D-Type Edge-Triggered Flip-Flops	2Q86	2Q86	2H86	2Q86	2Q86
54/74ACT577	20	Octal D-Type Edge-Triggered Flip-Flops	2Q86	2Q86	2H86	2Q86	2Q86
54/74ACT580	20	Octal D-Type Transparent Latches	2Q86	2Q86	2H86	2Q86	2Q86
54/74ACT620	20	Octal Bus Transceivers	now	now	2H86	2Q86	2Q86
54/74ACT623	20	Octal Bus Transceivers	now	now	2H86	2Q86	2Q86
54/74ACT640	20	Octal Bus Transceivers	now	now	2H86	2Q86	2Q86
54/74ACT643	20	Octal Bus Transceivers	now	now	2H86	2Q86	2Q86
54/74ACT645	20	Octal Bus Transceivers	now	now	2H86	2Q86	2Q86
54/74ACT821	24	10-Bit D-Type Edge-Triggered Flip-Flops	2Q86	2Q86	2H86	2Q86	2Q86
54/74ACT822	24	10-Bit D-Type Edge-Triggered Flip-Flops	2Q86	2Q86	2H86	2Q86	2Q86
54/74ACT823	24	9-Bit D-Type Edge-Triggered Flip-Flops	2Q86	2Q86	2H86	2Q86	2Q86
54/74ACT824	24	9-Bit D-Type Edge-Triggered Flip-Flops	2Q86	2Q86	2H86	2Q86	2Q86
54/74ACT825	24	Octal D-Type Edge-Triggered Flip-Flops	2Q86	2Q86	2H86	2Q86	2Q86
54/74ACT826	24	Octal D-Type Edge-Triggered Flip-Flops	2Q86	2Q86	2H86	2Q86	2Q86
54/74ACT827	24	10-Bit Buffers and Line Drivers	2Q86	2Q86	2H86	2Q86	2Q86
54/74ACT828	24	10-Bit Buffers and Line Drivers	2Q86	2Q86	2H86	2Q86	2Q86
54/74ACT841	24	10-Bit D-Type Transparent Latches	2Q86	2Q86	2H86	2Q86	2Q86
54/74ACT842	24	10-Bit D-Type Transparent Latches	2Q86	2Q86	2H86	2Q86	2Q86
54/74ACT843	24	9-Bit D-Type Transparent Latches	2Q86	2Q86	2H86	2Q86	2Q86
54/74ACT844	24	9-Bit D-Type Transparent Latches	2Q86	2Q86	2H86	2Q86	2Q86
54/74ACT845	24	9-Bit D-Type Transparent Latches	2Q86	2Q86	2H86	2Q86	2Q86
54/74ACT846	24	9-Bit D-Type Transparent Latches	2Q86	2Q86	2H86	2Q86	2Q86
54/74ACT861	24	10-Bit Bus Transceivers	now	now	2H86	2Q86	2Q86
54/74ACT862	24	10-Bit Bus Transceivers	now	now	2H86	2Q86	2Q86
54/74ACT863	24	9-Bit Bus Transceivers	now	now	2H86	2Q86	2Q86
54/74ACT864	24	9-Bit Bus Transceivers	now	now	2H86	2Q86	2Q86
54/74ACT874	24	Dual 4-Bit D-Type Edge-Triggered Flip-Flops	2Q86	2Q86	2H86	2Q86	2Q86
54/74ACT876	24	Dual 4-Bit D-Type Edge-Triggered Flip-Flops	2Q86	2Q86	2H86	2Q86	2Q86
54/74ACT878	24	Dual 4-Bit D-Type Edge-Triggered Flip-Flops	2Q86	2Q86	2H86	2Q86	2Q86
54/74ACT879	24	Dual 4-Bit D-Type Edge-Triggered Flip-Flops	2Q86	2Q86	2H86	2Q86	2Q86
54/74ACT880	24	Dual 4-Bit D-Type Transparent Latches	2Q86	2Q86	2H86	2Q86	2Q86

V54/74 A•C•T INTERFACE LOGIC FAMILY

VTC Incorporated

ALS SPEED

5ns Typical Propagation Delay

VTC's A•C•T is a direct replacement for ALS and 29800, and the ultimate upgrade for HCT interface functions, with:

- Propagation delays that meet or exceed those of ALS
- Operating frequencies to 75MHz
- And power consumption always less than bipolar

The VTC A•C•T Family obsoletes HCT and ALS interface functions altogether.

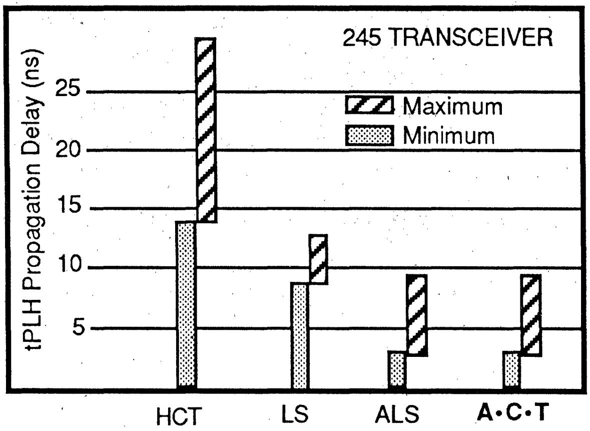

CMOS POWER

50 µW Typical Quiescent Power

A cool A•C•T featuring:

- Quiescent power reduction of 3 to 5 orders of magnitude over ALS
- Power consumption always less than bipolar-even at 75MHz
- And, power dissipation only 10mW per MHz

With VTC's A•C•T Family, you no longer have to sacrifice speed and drive to get low power.

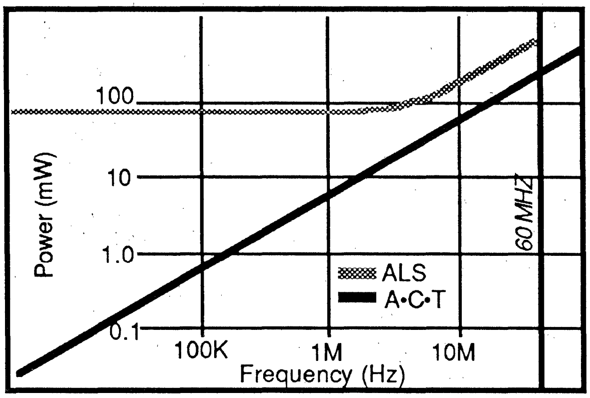

TTL DRIVE

48mA Constant Current Drive

That 48mA is guaranteed across the entire VTC A•C•T Family.

- All A•C•T products are fully characterized, with guaranteed mins and maxs over:
  - temperature
  - power supply range
  - 50pF and 300pF loads
- Rugged enough to drive 50 ohm lines

And, VTC's proprietary output circuitry provides significantly improved switching characteristics.

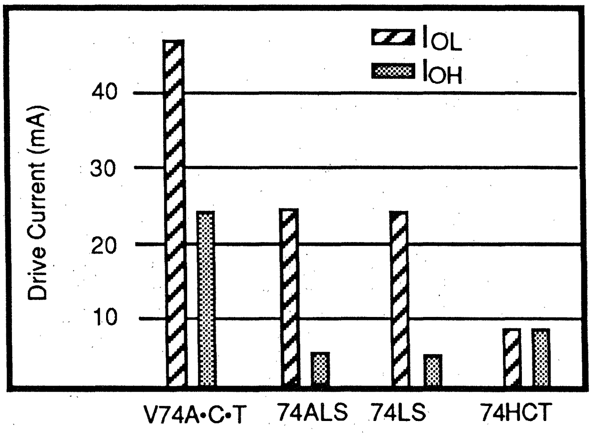

V54/74 A•C•T INTERFACE LOGIC FAMILY

VTC Incorporated

ABSOLUTE MAXIMUM RATINGS

Supply Voltage, VCC	-0.5V to +7.0V
Input Voltage	7.0V
Off-State Output Voltage	7.0V
Operating Free-Air Temperature	Military Temp -55°C to 125°C Commercial Temp -40°C to 85°C
Storage Temperature Range	-85°C to 150°C
Static Discharge Voltage (per MIL-STD-883 Method 3015.2)	>2000V

DC ELECTRICAL CHARACTERISTICS: $V_{CC} = 5V \pm 10\%$

SYMBOL	PARAMETER	TEST CONDITIONS		Military -55° to 125° C		Commercial -40° to 85° C		UNITS
				Typ	Guar	Typ	Guar	
V_{IH}	Minimum High Level Input Voltage				2.0		2.0	V
V_{IL}	Maximum Low Level Input Voltage				0.8		0.8	V
V_{OH}	Minimum High Level Output Voltage	Vcc=4.5V $V_{IN} = V_{IH}$ or V_{IL}	$\lvert I_{OH} \rvert$					
			20μA		4.4		4.4	V
			24mA		2.4		2.6	V
V_{OL}	Maximum Low Level Output Voltage	Vcc=4.5V $V_{IN} = V_{IH}$ or V_{IL}	$\lvert I_{OL} \rvert$					
			20μA		0.1		0.1	V
			32mA		0.5		0.4	V
			48mA		0.65		0.5	V
I_L	Maximum Input Leakage Current	Vcc=5.5V V_{IN} =Vcc or Gnd			±1.0		±1.0	μA
V_{IK}	Input Clamp Voltage	Vcc=4.5V	I_{IN}					
			-18mA		-1.2		-1.2	V
			18mA		Vcc+1.2		Vcc+1.2	V
I_{OZ}	Maximum Output Leakage Current	Vcc=5.5V V OUT =Vcc or Gnd All Outputs Disabled		1.0	±10.0	0.5	±5.0	μA
I_{CC}	Maximum Quiescent Supply Current	Vcc=5.5V V_{IN} =Vcc or Gnd #All Outputs Disabled		10.0	160.0	10.0	120.0	μA
		*V_{IN} =2.0V		0.5	1.5	0.5	1.2	mA
		*V_{IN} =0.8V		0.5	1.5	0.5	1.2	mA

*Worst case leakage current at the TTL input receivers. One input only, all others tied to ground.
#Outputs floating, except for transceivers which must have outputs tied to Vcc or ground.

Note 1: Maximum ratings are those values beyond which damage to the device may occur.

RECOMMENDED OPERATING CONDITIONS

SYMBOL	PARAMETER	VALUE						UNIT
		Min		Typ		Max		
		Mil	Comm	Mil	Comm	Mil	Comm	
V_{CC}	Supply Voltage	4.5	4.5	5.0	5.0	5.5	5.5	V
T_A	Operating Free-Air Temp	-55	-40			125	85	°C
t_r , t_f	Input Rise and Fall Time			3	3	500	500	nS
V_{IH}	High Level Input Voltage	2.0	2.0			Vcc+0.5	Vcc+0.5	V
V_{IL}	Low Level Input Voltage	-0.5	-0.5			0.8	0.8	V

V54ACT240
V74ACT240
OCTAL BUFFERS AND LINE DRIVERS WITH 3-STATE OUTPUTS

VTC Incorporated

FEATURES:
- CMOS Replacement for ALS
- High speed, 5ns Typical
- TTL Levels, I_{OL}/I_{OH} = 48 mA Commercial, 32 mA Military
- Low Input Current, 1μA Max
- Fully Specified: 5V ± 10% Power Supply
  50pF and 300pF Loading
  Min and Max over Temperature

FUNCTIONAL DESCRIPTION:
These are dual 4-bit inverting buffer drivers. $\overline{\text{G1}}$ and $\overline{\text{G2}}$ are the two separate enable lines. When $\overline{\text{G}}$ is low, the buffers are enabled and bus Y gets $\overline{\text{A}}$ values. A high value of $\overline{\text{G}}$ disables the buffers.

This octal high performance interface family is designed for high capacitance, low impedance load drive. It is compatable with TTL I/O and ALS performance. These features are ideal for bus oriented interface buffering, memory drives, and clock or line drives.

V54/74 A•C•T Interface Logic Family Buffers and Line Drivers with 3-State Outputs

V54/74ACT240	Octal, inverting
V54/74ACT241	Octal, non-inverting
V54/74ACT244	Octal, non-inverting
V54/74ACT465	Octal, non-inverting
V54/74ACT466	Octal, inverting
V54/74ACT467	Octal, non-inverting
V54/74ACT468	Octal, inverting
V54/74ACT540	Octal, inverting
V54/74ACT541	Octal, non-inverting
V54/74ACT827	10-bit, non-inverting
V54/74ACT828	10-bit, inverting

CONNECTION DIAGRAMS

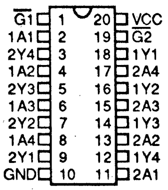
G1 1
1A1 2
2Y4 3
1A2 4
2Y3 5
1A3 6
2Y2 7
1A4 8
2Y1 9
GND 10
20 VCC
19 G2
18 1Y1
17 2A4
16 1Y2
15 2A3
14 1Y3
13 2A2
12 1Y4
11 2A1

DIP and SOIC
(Top View)

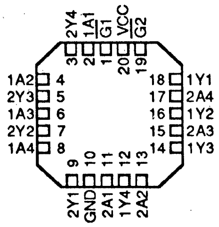
2Y4 3
1A1 2
G1 1
VCC 20
G2 19
1A2 4
2Y3 5
1A3 6
2Y2 7
1A4 8
18 1Y1
17 2A4
16 1Y2
15 2A3
14 1Y3
9 2Y1
10 GND
11 2A1
12 1Y4
13 2A2

PLCC and LCC
(Top View)

FUNCTION TABLE

INPUTS		OUTPUTS
$\overline{\text{G}}$i	Ai	Yi
H	X	Z
L	L	H
L	H	L

LOGIC DIAGRAM (POSITIVE LOGIC)

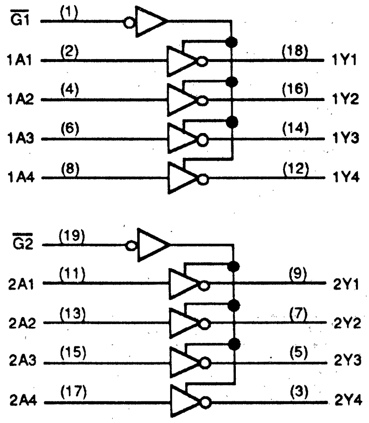
G1 (1)
1A1 (2)
(18) 1Y1
1A2 (4)
(16) 1Y2
1A3 (6)
(14) 1Y3
1A4 (8)
(12) 1Y4
G2 (19)
2A1 (11)
(9) 2Y1
2A2 (13)
(7) 2Y2
2A3 (15)
(5) 2Y3
2A4 (17)
(3) 2Y4

RECOMMENDED OPERATING CONDITIONS V54ACT240/V74ACT240

SYMBOL	PARAMETER	VALUE						UNIT
		Min		Typ		Max		
		Mil	Comm	Mil	Comm	Mil	Comm	
V_{CC}	Supply Voltage	4.5	4.5	5.0	5.0	5.5	5.5	V
T_A	Operating Free-Air Temp	-55	-40			125	85	°C
t_r , t_f	Input Rise and Fall Time			3	3	500	500	ns
V_{IH}	High Level Input Voltage	2.0	2.0			V_{CC}+0.5	V_{CC}+0.5	V
V_{IL}	Low Level Input Voltage	-0.5	-0.5			0.8	0.8	V

AC CHARACTERISTICS: Input t_r , t_f ≤ 3 nsec

SYMBOL	PARAMETER	C_L in pF	Min	V_{CC} =5V 25°C Typ	V_{CC} =5V±10% 25°C Max	85°C Max	125°C Max	UNITS	FIGURE
t_{PLH}	Prop. Delay A to Ya or B to Yb	50	3	5	8	11	13	ns	3
		300	7	9	12	15	17	ns	3
t_{PHL}		50	3	5	7	9	12	ns	3
		300	7	9	12	15	17	ns	3
t_{PZH}	Prop. Delay Output Enable to Ya or Yb	50	4	7	9	12	14	ns	2
		300	6	9	11	14	16	ns	2
t_{PZL}		50	4	7	10	13	15	ns	2
		300	8	12	14	17	20	ns	2
t_{PHZ}	Prop. Delay Output Disable	10	3	6	9	12	14	ns	2
		50	4	8	11	13	15	ns	2
t_{PLZ}		10	3	6	9	12	14	ns	2
		50	4	8	11	13	15	ns	2
t_{TLH}	Output Trans. Time, Any Output 10-90% of 0-3.5V	50	1	2	2.5	4	4	ns	4
		300	5	8	12	15	18	ns	4
t_{THL}		50	1	2	2.5	4	4	ns	4
		300	5	7	9	12	13	ns	4
C_{IN}	Input Capacitance			4	6	6	6	pF	
C_{OUT}	Output Capacitance (Outputs Off)			8	10	10	10	pF	
C_{PD}	Power Dissipation Capacitance* (per buffer)			30	35	35	35	pF	

* $P_T = (C_{PD} + C_L) \cdot V_{CC}^2 \cdot f \cdot n + I_{CC} \cdot V_{CC}$, Total power dissipation where n = # of buffers

FOR COMPLETE DATA SHEET, Call 800-443-0100, Ext. 518

V54ACT245
V74ACT245
OCTAL BUS TRANSCEIVERS WITH 3-STATE OUTPUTS

VTC Incorporated

FEATURES:
- CMOS Replacement for ALS
- High speed, 5ns Typical
- TTL Levels, I_{OL}/I_{OH} = 48 mA Commercial,
  32 mA Military
- Low Input Current, 1µA Max
- Fully Specified: 5V ± 10% Power Supply
  50pF and 300pF Loading
  Min and Max over Temperature

FUNCTIONAL DESCRIPTION:

These 8-bit transceivers allow synchronous two way communication between data buses A and B. The DIR signal controls the direction of data flow. When DIR is high, data flows from A to B. When DIR is low, data flows from B to A. The $\overline{G}$ signal enables the buffer.

These parts are designed to interface with 3-state buses and I/O ports. The TTL logic levels are ideal for interfacing with high-capacitance, low impedance loads on both buses A and B.

FUNCTION TABLE

ENABLE $\overline{G}$	DIRECTION CONTROL DIR	OPERATION
L	L	B data to A bus
L	H	A data to B bus
H	X	Isolation

CONNECTION DIAGRAMS

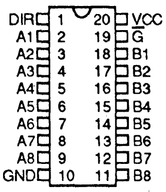
DIR 1
A1 2
A2 3
A3 4
A4 5
A5 6
A6 7
A7 8
A8 9
GND 10
20 VCC
19 $\overline{G}$
18 B1
17 B2
16 B3
15 B4
14 B5
13 B6
12 B7
11 B8

DIP and SOIC
(Top View)

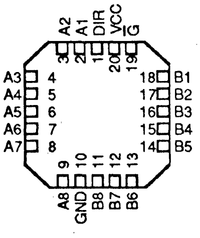
A2
A1
DIR
VCC
$\overline{G}$
3
2
1
20
19
A3 4
A4 5
A5 6
A6 7
A7 8
18 B1
17 B2
16 B3
15 B4
14 B5
9
10
11
12
13
A8
GND
B8
B7
B6

PLCC and LCC
(Top View)

LOGIC DIAGRAM (POSITIVE LOGIC)

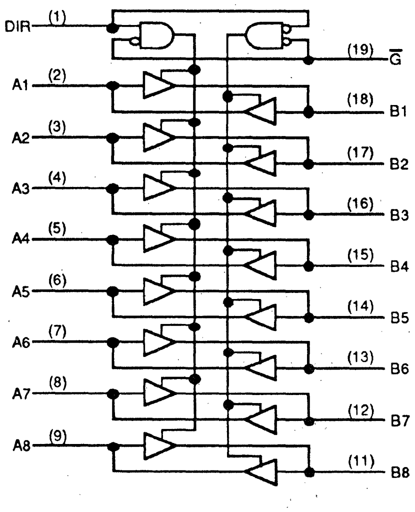
DIR (1)
(19) $\overline{G}$
A1 (2)
(18) B1
A2 (3)
(17) B2
A3 (4)
(16) B3
A4 (5)
(15) B4
A5 (6)
(14) B5
A6 (7)
(13) B6
A7 (8)
(12) B7
A8 (9)
(11) B8

V54/74 A•C•T Interface Logic Family Bus Transceivers with 3-State Outputs

V54/74ACT245	Octal, non-inverting
V54/74ACT620	Octal, inverting
V54/74ACT623	Octal, non-inverting
V54/74ACT640	Octal, inverting
V54/74ACT643	Octal, inverting
V54/74ACT645	Octal, non-inverting
V54/74ACT861	10-bit, non-inverting
V54/74ACT862	10-bit, inverting
V54/74ACT863	9-bit, non-inverting
V54/74ACT864	9-bit, inverting

RECOMMENDED OPERATING CONDITIONS V54ACT245/V74ACT245

SYMBOL	PARAMETER	VALUE						UNIT
		Min		Typ		Max		
		Mil	Comm	Mil	Comm	Mil	Comm	
V_{CC}	Supply Voltage	4.5	4.5	5.0	5.0	5.5	5.5	V
T_A	Operating Free-Air Temp	-55	-40			125	85	°C
t_r, t_f	Input Rise and Fall Time			3	3	500	500	ns
V_{IH}	High Level Input Voltage	2.0	2.0			V_{CC}+0.5	V_{CC}+0.5	V
V_{IL}	Low Level Input Voltage	-0.5	-0.5			0.8	0.8	V

AC CHARACTERISTICS: Input t_r, t_f ≤ 3 nsec

SYMBOL	PARAMETER	C_L in pF	Min	V_{CC}=5V 25°C Typ	V_{CC}=5V±10% 25°C Max	85°C Max	125°C Max	UNITS	FIGURE
t_{PLH}	Prop. Delay A to B or B to A	50	3	5	7	10	12	ns	3
		300	5	8	11	13	15	ns	3
t_{PHL}		50	3	5	9	12	14	ns	3
		300	6	11	15	19	22	ns	3
t_{PZH}	Prop. Delay Output Enable to A or B	50	4	7	11	13	15	ns	2
		300	5	9	14	18	21	ns	2
t_{PZL}		50	4	8	12	15	17	ns	2
		300	8	12	17	21	24	ns	2
t_{PHZ}	Prop. Delay Output Disable to A or B	10	4	7	9	12	14	ns	2
		50	4	7	10	13	15	ns	2
t_{PLZ}		10	4	7	9	12	14	ns	2
		50	4	7	10	13	15	ns	2
t_{TLH}	Output Trans. Time, Any Output 10-90% of 0-3.5V	50	1	2	3	4	5	ns	4
		300	5	9	13	17	19	ns	4
t_{THL}		50	1	2	3	4	5	ns	4
		300	4	7	9	12	13	ns	4
C_{IN}	Input Capacitance			10	12	12	12	pF	
C_{OUT}	Output Capacitance			10	12	12	12	pF	
C_{PD}	Power Dissipation Capacitance* (per buffer)			35	45	45	45	pF	

* $P_T = (C_{PD} + C_L) \cdot V_{CC}^2 \cdot f \cdot n + I_{CC} \cdot V_{CC}$, Total power dissipation where n = # of buffers

V54ACT373
V74ACT373

OCTAL D-TYPE TRANSPARENT LATCHES WITH 3-STATE OUTPUTS

VTC Incorporated

FEATURES:

- CMOS Replacement for ALS
- High speed, 6ns Typical
- TTL Levels, I_{OL}/I_{OH} = 48 mA Commercial,
  32 mA Military
- Low Input Current, 1µA Max
- Fully Specified: 5V ± 10% Power Supply
  50pF and 300pF Loading
  Min and Max over Temperature

FUNCTIONAL DESCRIPTION:

These are 8-bit transparent D-type latches. While latch enable C is high, the latch output will follow the data input. The data at input D is latched when the enable is taken low.

The $\overline{OC}$ output-control signal can be used to place all the outputs in active, or high impedence state. The latch data can be changed independant of $\overline{OC}$.

These parts have been designed to interface with 3-state buses and I/O ports or used as storage elements. The TTL logic levels are ideal for interfacing with high-capacitance, low impedance loads. (50 ohms typical)

V54/74 A•C•T Interface Logic Family D-Type Transparent Latches with 3-State Outputs

V54/74ACT373	Octal, non-inverting
V54/74ACT533	Octal, inverting
V54/74ACT563	Octal, inverting
V54/74ACT573	Octal, non-inverting
V54/74ACT580	Octal, inverting
V54/74ACT841	10-bit, non-inverting
V54/74ACT842	10-bit, inverting
V54/74ACT843	9-bit, non-inverting
V54/74ACT844	9-bit, inverting
V54/74ACT845	9-bit, non-inverting
V54/74ACT846	9-bit, inverting
V54/74ACT880	Dual 4-bit, inverting

CONNECTION DIAGRAMS

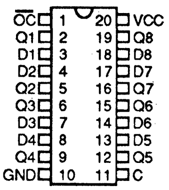

DIP and SOIC
(Top View)

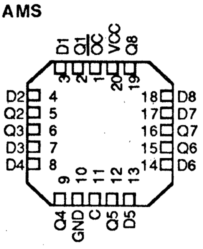

PLCC and LCC
(Top View)

FUNCTION TABLE (EACH LATCH)

INPUTS			OUTPUT
$\overline{OC}$	Enable C	D	Q
L	H	H	H
L	H	L	L
L	L	X	Q_0
H	X	X	Z

LOGIC DIAGRAM (POSITIVE LOGIC)

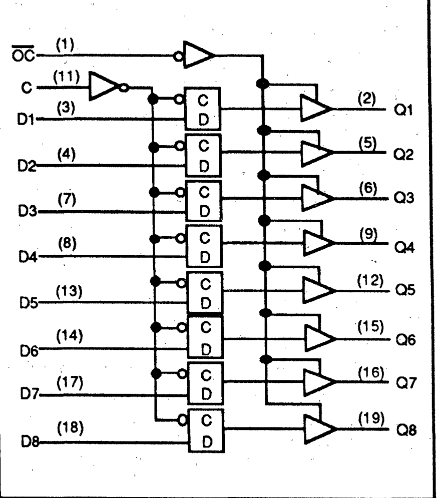

RECOMMENDED OPERATING CONDITIONS **V54ACT373/V74ACT373**

SYMBOL	PARAMETER	VALUE						UNIT
		Min		Typ		Max		
		Mil	Comm	Mil	Comm	Mil	Comm	
V_{CC}	Supply Voltage	4.5	4.5	5.0	5.0	5.5	5.5	V
T_A	Operating Free-Air Temp	-55	-40			125	85	°C
t_r , t_f	Input Rise and Fall Time			3	3	500	500	ns
V_{IH}	High Level Input Voltage	2.0	2.0			V_{CC}+0.5	V_{CC}+0.5	V
V_{IL}	Low Level Input Voltage	-0.5	-0.5			0.8	0.8	V

AC CHARACTERISTICS: INPUT t_r ,t_f ≤ 3 nsec

SYMBOL	PARAMETER	C_L in pF	Min	V_{CC}=5V 25°C Typ	V_{CC}=5V±10%			UNITS	FIGURE
					25°C Max	85°C Max	125°C Max		
t_{PLH}	Prop. Delay Input D to Q	50	4	6	8	10	12	ns	3
		300	6	9	12	15	17	ns	3
t_{PHL}		50	4	7	9	12	14	ns	3
		300	7	11	16	20	24	ns	3
t_{PLH}	Prop. Delay Latch Enable C to any Q	50	4	6	9	12	14	ns	3
		300	7	9	13	17	19	ns	3
t_{PHL}		50	4	6	9	12	14	ns	3
		300	7	10	15	19	22	ns	3
t_{PZH}	Prop. Delay Output Enable to any Q	50	4	7	10	13	15	ns	2
		300	6	10	15	19	22	ns	2
t_{PZL}		50	4	9	12	15	17	ns	2
		300	7	11	18	24	37	ns	2
t_{PHZ}	Prop. Delay Output Disable to Q	10	3	5	8	10	12	ns	2
		50	4	7	10	13	15	ns	2
t_{PLZ}		10	3	5	8	10	12	ns	2
		50	4	7	10	13	15	ns	2
C_{IN}	Input Capacitance			4	6	6	6	pF	
C_{OUT}	Output Capacitance (Outputs Off)			8	10	10	10	pF	
C_{PD}	Power Dissipation Capacitance * (per buffer)			30	35	35	35	pF	

* $P_T = (C_{PD} + C_L) \cdot V_{CC}^2 \cdot f \cdot n + I_{CC} \cdot V_{CC}$, Total power dissipation where n = # of buffers

TIMING REQUIREMENTS: INPUT t_r , t_f ≤ 3 nsec

SYMBOL	PARAMETER	Min	V_{CC}=5V 25°C Typ	V_{CC}=5V±10%			UNITS	FIGURE
				25°C Max	85°C Max	125°C Max		
t_S	Min Setup Time, Input D to Latch Enable	1	2	3	3	3	ns	7
t_H	Min Hold Time, Latch Enable to Input Q	1	2	3	3	3	ns	7
t_W	Minimum Pulse Width	6	7	8	10	12	ns	5

V54ACT374
V74ACT374

OCTAL D-TYPE EDGE-TRIGGERED FLIP-FLOPS WITH 3-STATE OUTPUTS

VTC Incorporated

FEATURES:

- CMOS Replacement for ALS
- High speed, 6ns Typical
- TTL Levels, I_{OL}/I_{OH} = 48 mA Commercial,
  32 mA Military
- Low Input Current, 1μA Max
- Fully Specified: 5V ± 10% Power Supply
  50pF and 300pF Loading
  Min and Max over Temperature

FUNCTIONAL DESCRIPTION:

These are 8-bit flip-flops which are edge triggered on the positive transition of the clock.

The $\overline{OC}$ control signal can be used to place all the outputs in active, or high impedence state. Data in flip-flops can be changed independant of $\overline{OC}$.

These parts have been designed to interface with 3-state buses and I/O ports or used as working registers. The high drive capability, 48mA I_{OL}/I_{OH}, at the TTL logic levels is ideal for interfacing with high-capacitance, low impedance loads.

CONNECTION DIAGRAMS

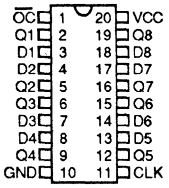

DIP and SOIC
(Top View)

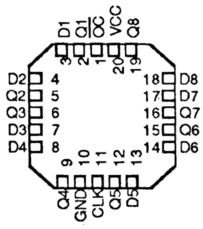

PLCC and LCC
(Top View)

FUNCTION TABLE (EACH FLIP-FLOP)

INPUTS			OUTPUT
$\overline{OC}$	CLK	D	Q
L	↑	H	H
L	↑	L	L
L	L	X	Q_0
H	X	X	Z

LOGIC DIAGRAM (POSITIVE LOGIC)

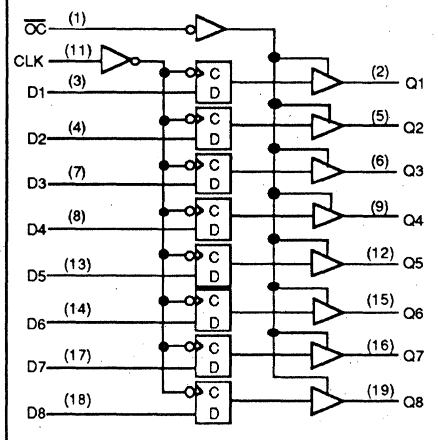

V54/74 A•C •T Interface Logic Family D-Type Edge-Triggered Flip-Flops with 3-State Outputs

V54/74ACT374	Octal, non-inverting
V54/74ACT534	Octal, inverting
V54/74ACT564	Octal, inverting
V54/74ACT574	Octal, non-inverting
V54/74ACT575	Octal, non-inverting
V54/74ACT576	Octal, inverting
V54/74ACT577	Octal, inverting
V54/74ACT821	10-bit, non-inverting
V54/74ACT822	10-bit, inverting
V54/74ACT823	9-bit, non-inverting
V54/74ACT824	9-bit, inverting
V54/74ACT825	Octal, non-inverting
V54/74ACT826	Octal, inverting
V54/74ACT874	Dual 4-bit, non-inverting
V54/74ACT876	Dual 4-bit, inverting
V54/74ACT878	Dual 4-bit, non-inverting
V54/74ACT879	Dual 4-bit, inverting

RECOMMENDED OPERATING CONDITIONS V54ACT374/V74ACT374

SYMBOL	PARAMETER	VALUE						UNIT
		Min		Typ		Max		
		Mil	Comm	Mil	Comm	Mil	Comm	
V_{CC}	Supply Voltage	4.5	4.5	5.0	5.0	5.5	5.5	V
T_A	Operating Free-Air Temp	-55	-40			125	85	°C
t_r, t_f	Input Rise and Fall Time			3	3	500	500	ns
V_{IH}	High Level Input Voltage	2.0	2.0			V_{CC}+0.5	V_{CC}+0.5	V
V_{IL}	Low Level Input Voltage	-0.5	-0.5			0.8	0.8	V

AC CHARACTERISTICS: INPUT t_r, t_f ≤ 3 nsec

SYMBOL	PARAMETER	C_L in pF	Min	V_{CC}=5V 25°C Typ	V_{CC}=5V±10%			UNITS	FIGURE
					25°C Max	85°C Max	125°C Max		
t_{PLH}	Prop. Delay Clock to Q	50	4	7	10	13	15	ns	3
		300	6	10	14	18	21	ns	3
t_{PHL}		50	4	7	10	13	15	ns	3
		300	9	13	16	20	24	ns	3
t_{PZH}	Prop. Delay Output Enable to Q	50	4	7	11	14	16	ns	2
		300	6	11	16	20	24	ns	2
t_{PZL}		50	4	8	12	15	17	ns	2
		300	7	14	19	24	28	ns	2
t_{PHZ}	Prop. Delay Output Disable to Q	10	3	5	8	10	12	ns	2
		50	5	7	10	13	15	ns	2
t_{PLZ}		10	3	5	8	10	12	ns	2
		50	5	7	10	13	15	ns	2
t_{TLH}	Output Trans. Time, Any Output 10-90% of 0-3.5V	50	1	2	3	4	5	ns	4
		300	6	8	15	19	22	ns	4
t_{THL}		50	1	2	3	4	5	ns	4
		300	4	6	11	14	16	ns	4
C_{IN}	Input Capacitance			4	6	6	6	pF	
C_{OUT}	Output Capacitance			8	10	10	10	pF	
C_{PD}	Power Dissipation Capacitance * (per buffer)			30	35	35	35	pF	

* $P_T = (C_{PD} + C_L) \cdot V_{CC}^2 \cdot f \cdot n + I_{CC} \cdot V_{CC}$, Total power dissipation where n = # of buffers

TIMING REQUIREMENTS: INPUT t_r, t_f ≤ 3 nsec

SYMBOL	PARAMETER	Min	V_{CC}=5V 25°C Typ	V_{CC}=5V±10%			UNITS	FIGURE
				25°C Max	85°C Max	125°C Max		
t_S	Min Setup Time, Input D to Clock	1	2	3	3	3	ns	6
t_H	Min Hold Time, Clock to Input D	1	2	3	3	3	ns	6
t_W	Minimum Pulse Width, Clock	10	10	12	14	16	ns	5
F_{max}	Maximum Frequency		75	70	60	50	MHz	

V54ACT821
V74ACT821

10-BIT BUS INTERFACE FLIP-FLOPS WITH 3-STATE OUTPUTS

VTC Incorporated

FEATURES:

- CMOS Replacement for ALS
- High speed, 6ns Typical
- TTL Levels, I_{OL}/I_{OH} = 48 mA Commercial, 32 mA Military
- Low Input Current, 1µA Max
- Fully Specified: 5V ± 10% Power Supply
  50pF and 300pF Loading
  Min and Max over Temperature

FUNCTIONAL DESCRIPTION:

These are 10-bit edge triggered flip-flops. The data is latched by the low to high edge transition of the CLK signal.

The $\overline{OC}$ output control signal can be used to place all the outputs in active, or high impedence state. Data in flip-flops can be changed independant of $\overline{OC}$.

These parts have been designed to interface with 3-state buses and I/O ports or used as working registers. The high drive capability, 48mA I_{OL}/I_{OH}, at the TTL logic levels is ideal for interfacing with high-capacitance, low impedance loads.

CONNECTION DIAGRAMS

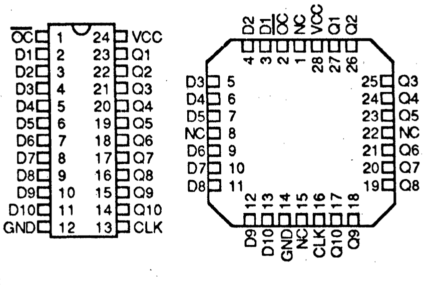
OC 1
D1 2
D2 3
D3 4
D4 5
D5 6
D6 7
D7 8
D8 9
D9 10
D10 11
GND 12
24 VCC
23 Q1
22 Q2
21 Q3
20 Q4
19 Q5
18 Q6
17 Q7
16 Q8
15 Q9
14 Q10
13 CLK
D2 D1 OC NC VCC Q1 Q2
4 3 2 1 28 27 26
D3 5
D4 6
D5 7
NC 8
D6 9
D7 10
D8 11
25 Q3
24 Q4
23 Q5
22 NC
21 Q6
20 Q7
19 Q8
12 13 14 15 16 17 18
D9 D10 GND NC CLK Q10 Q9

DIP and SOIC (Top View)

PLCC and LCC (Top View)

FUNCTION TABLE (EACH FLIP-FLOP)

INPUTS			OUTPUT
$\overline{OC}$	CLK	D	Q
L	↑	H	H
L	↑	L	L
L	L	X	Q_0
H	X	X	Z

LOGIC DIAGRAM (POSITIVE LOGIC)*

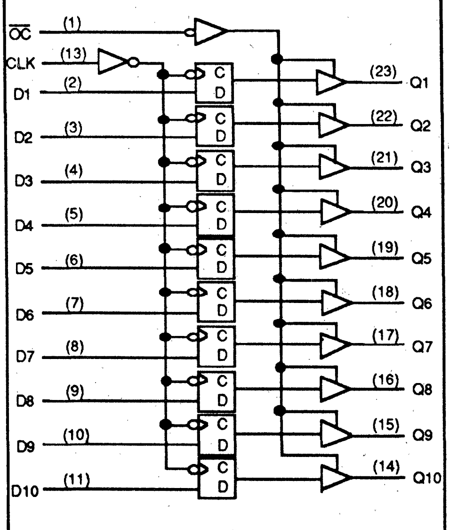
OC (1)
CLK (13)
D1 (2)
D2 (3)
D3 (4)
D4 (5)
D5 (6)
D6 (7)
D7 (8)
D8 (9)
D9 (10)
D10 (11)
C
D
(23) Q1
(22) Q2
(21) Q3
(20) Q4
(19) Q5
(18) Q6
(17) Q7
(16) Q8
(15) Q9
(14) Q10

*Note: Pinouts for DIP and SOIC only

V54/74A•C•T Interface Logic Family
10-Bit Functions with 3-State Outputs

V54/74ACT821	D-type edge-triggered flip-flop, non-inverting
V54/74ACT822	D-type edge triggered flip-flop, inverting
V54/74ACT827	Buffer and line driver, non-inverting
V54/74ACT828	Buffer and line driver, inverting
V54/74ACT841	D-type transparent latch, non-inverting
V54/74ACT842	D-type transparent latch, inverting
V54/74ACT861	Bus transceiver, non-inverting
V54/74ACT862	Bus transceiver, inverting

V54ACT821/V74ACT821

PRELIMINARY

RECOMMENDED OPERATING CONDITIONS

SYMBOL	PARAMETER	Min		Typ		Max		UNIT
		Mil	Comm	Mil	Comm	Mil	Comm	
V_{CC}	Supply Voltage	4.5	4.5	5.0	5.0	5.5	5.5	V
T_A	Operating Free-Air Temp	-55	-40			125	85	°C
t_r , t_f	Input Rise and Fall Time			3	3	500	500	ns
V_{IH}	High Level Input Voltage	2.0	2.0			V_{CC}+0.5	V_{CC}+0.5	V
V_{IL}	Low Level Input Voltage	-0.5	-0.5			0.8	0.8	V

AC CHARACTERISTICS: INPUT t_r , t_f ≤ 3 nsec

SYMBOL	PARAMETER	C_L in pF	Min	V_{CC}=5V 25°C Typ	V_{CC}=5V±10%			UNITS	FIGURE
					25°C Max	85°C Max	125°C Max		
t_{PLH}	Prop. Delay Clock to Q	50	4	6	8	11	13	ns	3
		300							
t_{PHL}		50	4	6	9	12	14	ns	3
		300							
t_{PZH}	Prop. Delay Output Enable to Q	50	4	7	7	10	12	ns	2
		300							
t_{PZL}		50	4	7	9	12	14	ns	2
		300							
t_{PHZ}	Prop. Delay Output Disable to Q	10							
		50	4	7	9	12	14	ns	2
t_{PLZ}		10							
		50	4	7	8	11	13	ns	2
t_{TLH}	Output Trans. Time, Any Output 10-90% of 0-3.5V	50	1	2	3	4	5	ns	4
		300							
t_{THL}		50	1	2	3	4	5	ns	4
		300							
t_{PLH}	$\overline{CLR}$ to Q	50	1	2	3	4	5	ns	
		300							
C_{IN}	Input Capacitance			4	6	6	6	pF	
C_{OUT}	Output Capacitance			8	10	10	10	pF	
C_{PD}	Power Dissipation Cap. (per buffer)			30	35	35	35	pF	

* $P_T = (C_{PD} + C_L) \cdot V_{CC}^2 \cdot f \cdot n + I_{CC} \cdot V_{CC}$, Total power dissipation where n = # of buffers

TIMING REQUIREMENTS: INPUT t_r , t_f ≤ 3 nsec

SYMBOL	PARAMETER	Min	V_{CC}=5V 25°C Typ	V_{CC}=5V±10%			UNITS	FIGURE
				25°C Max	85°C Max	125°C Max		
t_S	Min Setup Time, Input D to Clock	1	2	3	3	3	ns	6
t_H	Min Hold Time, Clock to Input D	1	2	3	3	3	ns	6
t_W	Minimum Pulse Width, Clock	10	10	12	14	16	ns	5
t_S	Clock Enable ($\overline{CLKEN}$) setup time		1	2	2	2	ns	
t_H	Clock Enable ($\overline{CLKEN}$) hold time		1	2	2	2	ns	
F_{max}	Maximum Frequency		75	70	60	50	MHz	

FOR COMPLETE DATA SHEET, Call 800-443-0100, Ext. 518

V54ACT864
V74ACT864
9-BIT BUS TRANSCEIVERS WITH 3-STATE OUTPUTS

VTC Incorporated

FEATURES:
- * CMOS Replacement for ALS
- * High speed, 5ns Typical
- * TTL Levels, I_{OL}/I_{OH} = 48 mA Commercial, 32 mA Military
- *Low Input Current, 1µA Max
- *Fully Specified: 5V ± 10% Power Supply
50pF and 300pF Loading
Min and Max over Temperature

FUNCTIONAL DESCRIPTION:

These are inverting 9-bit transceivers with dual-control enables $\overline{\text{OEA1}}$, $\overline{\text{OEA2}}$ and $\overline{\text{OEB1}}$, $\overline{\text{OEB2}}$. When both enables are low, the transceivers conduct from one port to the other. The nine bits provide the capability to transmit parity on the system buses among other possible uses.

These parts are designed to interface with 3-state buses and I/O ports. The high drive capability, 48 mA I_{OH}/I_{OL}, at the TTL logic levels is ideal for interfacing with high-capacitance, low impedance loads on both buses A and B.

CONNECTION DIAGRAMS

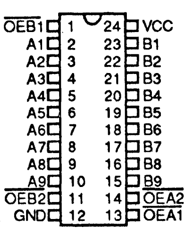
OEB1
A1
A2
A3
A4
A5
A6
A7
A8
A9
OEB2
GND
1
2
3
4
5
6
7
8
9
10
11
12
24
23
22
21
20
19
18
17
16
15
14
13
VCC
B1
B2
B3
B4
B5
B6
B7
B8
B9
OEA2
OEA1

DIP and SOIC
(Top View)

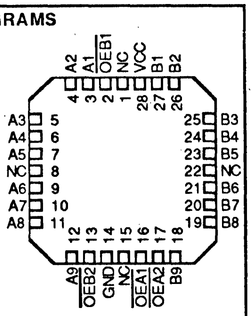
A2
A1
OEB1
NC
VCC
B1
B2
4
3
2
1
28
27
26
A3
A4
A5
NC
A6
A7
A8
5
6
7
8
9
10
11
25
24
23
22
21
20
19
B3
B4
B5
NC
B6
B7
B8
12
13
14
15
16
17
18
A9
OEB2
GND
NC
OEA1
OEA2
B9

PLCC and LCC
(Top View)

FUNCTION TABLE

ENABLE INPUTS				OPERATION
$\overline{\text{OEB1}}$	$\overline{\text{OEB2}}$	$\overline{\text{OEA1}}$	$\overline{\text{OEA2}}$	
H	X	L	L	B data to A bus
X	H	L	L	B data to A bus
L	L	H	X	A data to B bus
L	L	X	H	A data to B bus
H	X	H	X	Isolation
X	H	X	H	Isolation
L	L	L	L	Latch

LOGIC DIAGRAM (POSITIVE LOGIC)*

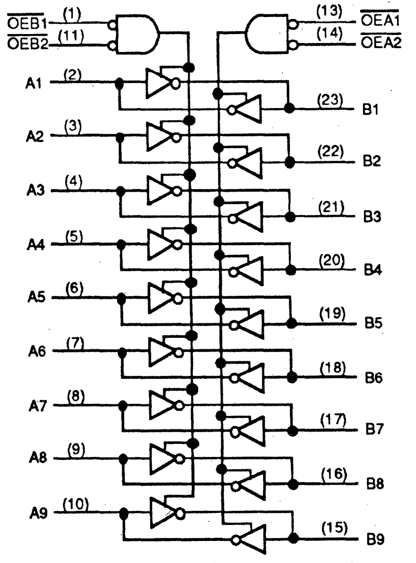
OEB1
(1)
OEB2
(11)
(13)
OEA1
(14)
OEA2
A1
(2)
(23)
B1
A2
(3)
(22)
B2
A3
(4)
(21)
B3
A4
(5)
(20)
B4
A5
(6)
(19)
B5
A6
(7)
(18)
B6
A7
(8)
(17)
B7
A8
(9)
(16)
B8
A9
(10)
(15)
B9

*Note: Pinouts are for DIP and SOIC only

V54/74 A•C•T Interface Logic Family 9-Bit Functions with 3-State Outputs

V54/74ACT823	D-type edge-triggered flip-flop, non-inverting
V54/74ACT824	D-type edge-triggered flip-flop, inverting
V54/74ACT843	D-type transparent latch, non-inverting
V54/74ACT844	D-type transparent latch, inverting
V54/74ACT845	D-type transparent latch, non-inverting
V54/74ACT846	D-type transparent latch, inverting
V54/74ACT863	Bus transceiver, non-inverting
V54/74ACT864	Bus transceiver, inverting

V54ACT864/V74ACT864

PRELIMINARY

RECOMMENDED OPERATING CONDITIONS

SYMBOL	PARAMETER	VALUE						UNIT
		Min		Typ		Max		
		Mil	Comm	Mil	Comm	Mil	Comm	
V_{CC}	Supply Voltage	4.5	4.5	5.0	5.0	5.5	5.5	V
T_A	Operating Free-Air Temp	-55	-40			125	85	°C
t_r, t_f	Input Rise and Fall Time			3	3	500	500	ns
V_{IH}	High Level Input Voltage	2.0	2.0			V_{CC}+0.5	V_{CC}+0.5	V
V_{IL}	Low Level Input Voltage	-0.5	-0.5			0.8	0.8	V

AC CHARACTERISTICS: Input t_r, t_f ≤ 3 nsec

SYMBOL	PARAMETER	C_L in pF	Min	V_{CC} =5V 25°C Typ	V_{CC} =5V±10%			UNITS	FIGURE
					25°C Max	85°C Max	125°C Max		
t_{PLH}	Prop. Delay A to B or B to A	50	3	6	9	12	14	ns	3
		300	5	8	12	15	17	ns	3
t_{PHL}		50	3	6	9	12	14	ns	3
		300	7	11	14	19	21	ns	3
t_{PZH}	Prop. Delay Output Enable to A or B	50	4	8	12	15	17	ns	2
		300	7	11	16	21	24	ns	2
t_{PZL}		50	4	8	13	17	20	ns	2
		300	8	15	20	26	29	ns	2
t_{PHZ}	Prop. Delay Output Disable to A or B	10	4	7	9	12	14	ns	2
		50	4	8	11	14	16	ns	2
t_{PLZ}		10	4	7	9	12	14	ns	2
		50	4	8	11	14	16	ns	2
t_{TLH}	Output Trans. Time, Any Output 10-90% of 0-3.5V	50	1	2	3	4	5	ns	4
		300	5	9	14	19	21	ns	4
t_{THL}		50	1	2	3	4	5	ns	4
		300	3	7	10	13	15	ns	4
C_{IN}	Input Capacitance			10	12	12	12	pF	
C_{OUT}	Output Capacitance			10	12	12	12	pF	
C_{PD}	Power Dissipation Capacitance* (per buffer)			35	45	45	45	pF	

* $P_T = (C_{PD} + C_L) \cdot V_{CC}^2 \cdot f \cdot n + I_{CC} \cdot V_{CC}$, Total power dissipation where n = # of buffers

A·C·T NOW!

VTC's A·C·T Family: The New Triple Play in Interface Logic

ALS speed, **C**MOS power, and **T**TL drive. Plus:

- ESD protection guaranteed at more than 2000V
- Latch-up immunity greater than 200mA—guaranteed
- Wide commercial temp range of −40°C to +85°C
- Improved noise margins
- And operating frequencies to 75MHz

What are you waiting for? Just pick up the phone, write, or use the reader service card. And we'll send you our brand new, 300-page "Data Book & Applications Manual."

The *V54/74 A·C·T Interface Logic Family:* the time to ACT is now.

VTC Incorporated, 2401 East 86th Street, P.O. Box 201559, Bloomington, MN 55420. 612/854-8830.

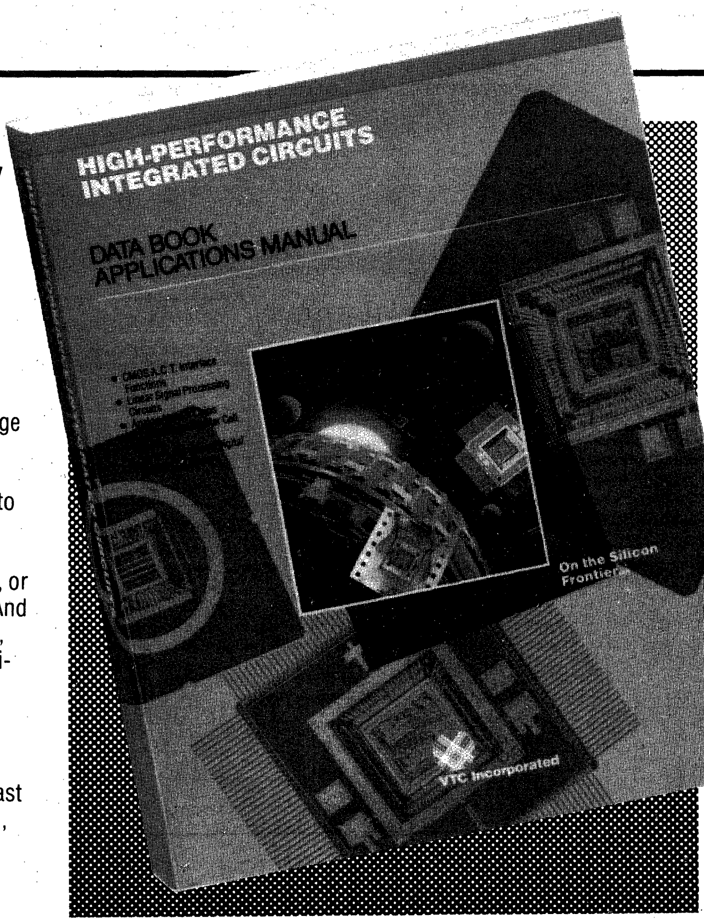
HIGH-PERFORMANCE INTEGRATED CIRCUITS
DATA BOOK APPLICATIONS MANUAL
On the Silicon Frontier
VTC Incorporated

VTC Data Book and Applications Manual

More than 300 pages, including 50 complete A·C·T Family data sheets with:

- AC&DC characterization tables
- derating curves
- mins and maxs specified over temperature, voltage, and load

Plus 70 pages of application notes, including:

- System design considerations
- Backplane bus design examples
- ESD and latch-up discussion
- Complete test definitions

CALL 800-VTC-CMOS

VTC Incorporated
On the Silicon Frontier.™

INTRODUCTION TO MICROPROCESSORS

This section begins with a "Master Selection Guide" that covers all major parameters needed to choose a microprocessor for particular application. Microprocessors are sequenced by increasing data word size and then alphabetically by manufacturer.

Next, once you've chosen the proper microprocessor for your application, go to the "System Components" section. Arranged alphanumerically by microprocessor, it shows all the available peripheral devices that work with a particular microprocessor.

Finally, there is a "General Purpose" section describing devices that can be used in different microprocessor systems, not necessarily with one family.

Detailed Product Information provided by:

AT&T	1602
Chips & Technology	1604
Fairchild	1607
Fujitsu Microelectronics	1611
Goldstar	1612
Gould AMI	1613
GTE Microcircuits	1615
Harris	1618
Hitachi	1632
Inmos	1636
Integrated Device Technology	1638
Intersil	1645
Mostek	1647
Motorola Semiconductor	1654
NCR Microelectronics	1671
RCA Solid State	1673
Signetics	1681
Toshiba America	1750
VLSI Technology	1751
Zilog	1773

The manufacturers listed above have provided detailed information on their latest and most significant products.

EINFÜHRUNG MIKRO-PROZESSOREN

Dieser Abschnitt beginnt mit einem "Master Selection Guide", der alle Parameter enthält, die zur Auswahl eines für einen bestimmten Anwendungsfall geeigneten Mikroprozessors erforderlich sind.

Haben Sie einmal den für Ihren Anwendungsfall geeigneten Mikroprozessor gefunden, so gehen Sie weiter zum Abscnitt "Systemkomponenten" (System Components). In alphanumerischer Reihenfolge der Mikroprozessoren, enthält dieser Teil alle peripheren Bausteine, die für einen bestimmten Mokroprozessor verfügbar sind.

Schließlich gibt es noch den Abschnitt "Allgemeine Verwendung" (General Purpose) mit einer Beschreibung von Bauelementen, die für verschiedene Mikroprozessoren geeignet und nicht ausschließlich an ein System gebunded sind.

Alle Hersteller sind in alphanumerischer Reihenfolge aufgeführt.

INTRODUCTION AUX MICRO-PROCESSEURS

Cette Section débute par un Guide Général de Sélection qui couvre tous les paramètres importants utilisés dans le choix d'un microprocesseur pour une application bien déterminée.

Après avoir choisi le microprocesseur nécessaire à votre application, reportez-vous à la Section "Composants du Système (System Components). Une liste alphanumérique des microprocesseurs indique quels types d'appareils sont à utiliser avec tel ou tel microprocesseur.

Enfin, une Section intitulée "Applications Générales" ((General Purpose) décrit les appareils qui peuvant être utilisée dans différents systèmes de microprocesseur, et n'appartenent pas uniquement à une sule famille.

Toutes les sociétés fabricantes sont étudiées par ordre alphanumérique.

INTRODUCCIÓN AL MICROPROCESOR

Esta sección empieza con una Guía Maestra de Selección que cubre los parámetros necesitados en la selección del microprocesor para una aplicación determinada.

Después, una vez escogido el microprocesor para su aplicación, refiérase a la sección "Componentes de Sistema." Arreglado en orden alfabético y numérico por microprocesor, muestra todas las componentes periferales que funcionan con un microprocesor determinado.

Finalmente, hay una sección de "Propósito General" describiendo las componentes que pueden ser usadas en distintos sistemas de microprocesores, no necesariamente dentro de una familia.

Todos los fabricantes aparencen en orden alfabético y numérico.

マイクロプロセサーへの案内

このセクションは"マスターセレクションガイド"で始り利用者皆様のお知りになり度いマイクロプロセサーを選択するのに必要な全ての主要パラメーターを記載しています。そのマイクロプロセサーを見つけたら次に"システムコンポーネント"セクションに進んで下さい。マイクロプロセサーがアルファベット順，数学の若い順に並んでおり，そのマイクロプロセサーの周辺製品が記載されています。

最后は"ジェネラルパーパスセクション"であり，一つのマイクロプロセサーファミリー丈でなく他のマイクロプロセサーシステムにも使用される製品を紹介しています。全てのメーカーはアルファベット順，若い数字順にのっています。

MICROPROCESSORS

General				Architecture									Hardware Support	
							(For Microcomputers Only)							
Data Word Size (bits)	Process Type	Supply Voltage (V)	No. of Pins	Instruction Word Size (bits)	Directly Addressable Memory (words)	No. of Basic Instructions	On-Chip RAM (bits)	On-Chip (P)ROM (bits)	DMA Capability	Maximum Clock Frequency (MHz)	Instruction Time Min/Max (μs)	No. of Interrupt Levels	Prototyping System	In-Circuit Emulator
2BS	TTL	5	40	⩾18	512	512				6	45			
2BS	TTL	5	40	18	512	512				6	45			
4	CMOS	5	40							32				
4	CMOS	5	40	9	User defined	512				32				
4	CMOS	5	40	9	User defined	512				31				
4	CMOS	5	40	9	User defined	512				31				
4	CMOS	5	40	9	User defined	512				16				
4	CMOS	5	40	9	User defined	512				15				
4	CMOS	5	40	9	User defined	512				16				
4	CMOS	5	16	8,16	512	72	16x4	512x8		2	3		x	x
4	CMOS	5	16	8,16	1024	72	32x4	1Kx8		2	3		x	x
4	NMOS	5	42	8,16	4K	72	192x4	4Kx8		2	3		x	x
4	NMOS	5	42	8,16	2K	72	128x4	2Kx8		2	3		x	x
4	NMOS	5	42	8,16	4K	72	192x4	4Kx8		2	3		x	x
4	NMOS	5	42	8,16	2K	72	192x4	2Kx8		2	3		x	x
4	NMOS	5	28	8,16	2K	72	128x4	2Kx8		2	3		x	x
4	NMOS	5	64	8,16	4K	72	192x4	4Kx8		2	3		x	x
4	NMOS	5	64	8,16	2K	70	128x4	2Kx8		2	3		x	x
4	NMOS	5	42	8,16	1K	70	64x4	1Kx8		2	3		x	x
4	NMOS	5	28	8,16	1K	70	64x4	1Kx8		2	3		x	x
4	CMOS	5,3.5-6	42	8,16	4K	70	192x4	4Kx8		2	3		x	x
4	CMOS	5,3.5-6	42	8,16	2K	70	128x4	2Kx8		2	3		x	x
4	CMOS	5	42	8,16	1K	70	64Kx4	1Kx8		2	3		x	x
4	CMOS	3.5-6	42	8,16	2K	70	128x4	2Kx8		2	3		x	x
4	CMOS	2.5-3.5	42	8,16	2K	70	128x4	2Kx8		2	3		x	x
4	CMOS	5	42	8,16	1K	70	64Kx4	1Kx8		2	3		x	x
4	CMOS	5	42	8,16	2K	72	128x4	2Kx8		2	3		x	x
4	CMOS	5	42	8,16	2K	72	128x4	2Kx8		2	3		x	x
4	CMOS	5	28	8,16	1K	72	64x4	1Kx8		2	3		x	x
4	CMOS	5	70	8,16	4K	72	196x4	4Kx8		2	3		x	x
4	CMOS	3.5-6	28	8,16	1K	72	64x4	1Kx8		2	3		x	x
4	CMOS	2.5-3.5	28	8,16	1K	72	64x4	1Kx8		2	3		x	x
4	CMOS	5	80	10		71	160x4	2.1Kx10		0.5	10	2	x	
4	CMOS	5	42	10		98	576x4			6.2	1.33	3	x	x
4	CMOS	5	64	10		99	576x4			6.2	1.33	5	x	x
4	CMOS	4.5-6.0	64	10	2048	99	160x4	2Kx10		6.2	1.33	5	x	x
4	CMOS	4.0-6.0	64	10	2048	99	160x4	2Kx10		4.5	2	5	x	x
4	CMOS	2.7-6.0	64	10	2048	99	160x4	2Kx10		2.25	4	5	x	x
4	CMOS	4.5-6.0	64	10	4096	99	256x4	4Kx10		6.2	1.33	5	x	x
4	CMOS	4.0-6.0	64	10	4096	99	256x4	4Kx10		4.5	2	5	x	x
4	CMOS	2.7-6.0	64	10	4096	99	256x4	4Kx10		2.25	4	5	x	x
4	CMOS	4.5-6.0	42	10	2048	98	160x4	2Kx10		6.2	1.33	3	x	x

Software Support									
		Programs							
Cross Assembler	High Level Language	Debug	Diagnostic	Edit	Alternate Sources	Comments	Device	Source	Line
							NCR/32-020	NCR	
						Use 74S182 for look-ahead carry and N3001 microprogram control unit.	N3001	Signetics	
						Use 74S182 for look-ahead carry and N3001 microprogram control unit.	N3002	Signetics	
						Compatible with bipolar 2901.	CA29C01	Calmos	
						25% Faster than "C" Spec 70mA Icc	CY7C901-23C	Cypress	5
						15% Faster than "C" Spec 90mA Icc	CY7C901-27M	Cypress	
						Icc = 26.5mA, 1/10 Bipolar	CY7C901-31C	Cypress	
						Equivalent to "B" Spec Icc = 70mA	CY7C901-69C	Cypress	
						Equivalent to "B" Spec Icc = 90mA	CY7C901-88M	Cypress	
						Icc=26.5mA, 1/10 Bipolar	CY8C901-69C	Cypress	10
x						Low cost, 12 I/O ports, TTL/CMOS compatible.	MB88201	Fujitsu	
x						Low cost, 12 I/O ports, TTL/CMOS compatible.	MB88202	Fujitsu	
x						36 I/O ports, TTL/CMOS compatible, on board PLA.	MB88401	Fujitsu	
x						37 I/O ports, TTL/CMOS compatible.	MB8841	Fujitsu	
x						32 I/O ports, TTL/CMOS compatible, 8 bit A/D.	MB88411	Fujitsu	15
x						32 I/O ports, TTL/CMOS compatible, 8 bit A/D.	MB88413	Fujitsu	
x						23 I/O ports, TTL/CMOS compatible.	MB8842	Fujitsu	
x						57 I/O ports, TTL/CMOS compatible, watch dog timer, power down detect.	MB88421	Fujitsu	
x						57 I/O ports, TTL/CMOS compatible, watch dog timer, power down detect.	MB88423	Fujitsu	
x						37 I/O ports, TTL/CMOS compatible.	MB8843	Fujitsu	20
x						23 I/O ports, TTL/CMOS compatible.	MB8844	Fujitsu	
x						Other Vcc ranges available, 36 I/O ports TTL/CMOS compatible.	MB88501	Fujitsu	
x						Other Vcc ranges available, 36 I/O ports TTL/CMOS compatible.	MB88503	Fujitsu	
x						37 I/O ports, TTL/CMOS compatible.	MB8851	Fujitsu	
x						37 I/O ports, TTL/CMOS compatible.	MB8851A	Fujitsu	25
x						37 I/O ports, TTL/CMOS compatible.	MB8851L	Fujitsu	
x						37 I/O ports, TTL/CMOS compatible.	MB8853	Fujitsu	
x						6 bit 3 Channel D/A, 34 I/O ports, TTL/CMOS compatible.	MB88535	Fujitsu	
x						6 bit 3 Channel, 13 bit 1 CHL D/A, 34 I/O ports, TTL/CMOS compatible.	MB88536	Fujitsu	
x						23 I/O ports, TTL/CMOS compatible.	MB8854	Fujitsu	30
x						LCD driver, 29 I/O ports, TTL/CMOS compatible.	MB88541	Fujitsu	
x						23 I/O ports, TTL/CMOS compatible.	MB8854A	Fujitsu	
x						23 I/O ports TTL/CMOS compatible.	MB8854L	Fujitsu	
x						Drives seven segment LCDs, on chip counter timer. 32 I/O lines.	HD44790	Hitachi	
x		x	x	x		EPROM-on-package device (8K ROM max) for HMCS412 series	HD614P080C	Hitachi	35
x		x	x	x		EPROM-on-package device (8K ROM max) for HMCS402/404 series	HD614P080S	Hitachi	
x		x	x	x		58 I/O Lines; 26 high voltage (40V max), serial interface	HMCS402AC	Hitachi	
x		x	x	x		58 I/O Lines; 26 high voltage (40V max), serial interface	HMCS402C	Hitachi	
x		x	x	x		58 I/O Lines; 26 high voltage (40V max), serial interface	HMCS402CL	Hitachi	
x		x	x	x		58 I/O Lines; 26 high voltage (40V max), serial interface	HMCS404AC	Hitachi	40
x		x	x	x		58 I/O Lines; 26 high voltage (40V max), serial interface	HMCS404C	Hitachi	
x		x	x	x		58 I/O Lines; 26 high voltage (40V max), serial interface	HMCS404CL	Hitachi	
x		x	x	x		36 I/O Lines; 24 high voltage (40V max)	HMCS412AC	Hitachi	

Bold face indicates additional data is provided on the page noted.

MICROPROCESSORS (Cont'd)

General				Architecture									Hardware Support	
							(For Microcomputers Only)							
Data Word Size (bits)	Process Type	Supply Voltage (V)	No. of Pins	Instruction Word Size (bits)	Directly Addressable Memory (words)	No. of Basic Instructions	On-Chip RAM (bits)	On-Chip (P)ROM (bits)	DMA Capability	Maximum Clock Frequency (MHz)	Instruction Time Min/Max (μs)	No. of Interrupt Levels	Prototyping System	In-Circuit Emulator
4	CMOS	4.0-6.0	42	10	2048	98	160x4	2Kx10		4.5	2	3	x	x
4	CMOS	2.7-6.0	42	10	2048	98	160x4	2Kx10		2.25	4	3	x	x
4	CMOS	5	42	10	2048	71	160x4	2Kx10		0.5	10	3	x	x
4	CMOS	3	42	10	2048	71	160x4	2Kx10		0.5	20	3	x	x
4	CMOS	5	54	10	2048	71	160x4	2Kx10		0.5	10	3	x	x
4	CMOS	3	54	10	2048	71	160x4	2Kx10		0.5	20	3	x	x
4	CMOS	5	42	10	4096	71	256x4	4Kx10		0.9	5	3	x	x
4	CMOS	3	42	10	4096	71	256x4	4Kx10		0.9	20	3	x	x
4	CMOS	5	54	10	4096	71	256x4	4Kx10		0.9	5	3	x	x
4	CMOS	3	54	10	4096	71	256x4	4Kx10		0.9	20	3	x	x
4	CMOS	5	80	10	2048	71	160x4	2Kx10		0.5	10	3	x	x
4	CMOS	5	80	10	4096	71	256x4	4Kx10		1.0	5	3	x	x
4	NMOS	4.5-6.3	48	8	2K		160x4	.25/1			4/10	4/CPU	x	x
4	NMOS	4.5-6.3	40	8	2048	60	160x4	2048		0.25	8/16	4/CPU	x	x
4	NMOS	4.5-6.3	40	8	2048	60	160x4	See comments		0.25	8/16	4	x	x
4	NMOS	4.5-6.3	28	8	2048	60	160x4	2048		0.25	8/16	4/CPU	x	x
4	NMOS	4.5-6.3	24	8	2048	60	160x4	2048		0.25	8/16	4/CPU	x	x
4	NMOS	4.5-9.5	40	8	512	40	32x4	see comments		2.097	15/40		x	x
4	NMOS	4.5-9.5	40	8	512	40	32x4	see comments		0.50	16/40		x	x
4	NMOS	4.5-9.5	40	8	512	40	32x4	see comments		0.50	16/40		x	x
4	NMOS	4.5-6.3	40	8	1K	49	64x4	See comments		4	4/10	3	x	x
4	NMOS	4.5-6.3	40	8	1K	49	64x4	See comments		4	4/10		x	x
4	NMOS	4.5-9.5	40	8	2K	49	128x4	See comments		2.1	16/40	3	x	x
4	NMOS	4.5-9.5	40	8	2048	49	128x4	See comments		2.1	16/40	3	x	x
4	CMOS	2.4-6.0	24	8	512	40	32x4	512		0.25	4/dc		x	x
4	NMOS	4.5-6.3	24	8	512	40	32x4	512		0.25	15/40		x	x
4	CMOS	2.4-6.0	20	8	512	40	32x4	512		0.25	4/dc		x	x
4	NMOS	4.5-6.3	20	8	512	40	32x4	512x8		0.25	15/40	2	x	x
4	CMOS	3.0-5.5	20	8	512	40	32x4	512x8		0.50	16/dc		x	x
4	CMOS	4.5-5.5	20	8	512	40	32x4	512x8		2.0	4/dc		x	x
4	NMOS	4.5-5.5	20	8	512	40	32x4	512x8		0.50	16/40		x	x
4	NMOS	4.5-6.3	28	8	1K	49	64x4	1Kx8		2.1	4/10	3	x	x

Software Support									
		Programs							
Cross Assembler	High Level Language	Debug	Diagnostic	Edit	Alternate Sources	Comments	Device	Source	Line
x		x	x	x		36 I/O Lines; 24 high voltage (40V max)	HMCS412C	Hitachi	
x		x	x	x		36 I/O Lines; 24 high voltage (40V max)	HMCS412CL	Hitachi	
x		x	x	x		32 I/O Lines, stand-by mode, on-chip counter	HMCS44C	Hitachi	
x		x	x	x		32 I/O Lines, stand-by mode, on-chip counter	HMCS44CL	Hitachi	
x		x	x	x		44 I/O Lines, stand-by moe, on-chip counter	HMCS45C	Hitachi	5
x		x	x	x		44 I/O Lines, stand-by moe, on-chip counter	HMCS45CL	Hitachi	
x		x	x	x		32 I/O Lines, stand-by mode, on-chip counter	HMCS46C	Hitachi	
x		x	x	x		32 I/O Lines, stand-by mode, on-chip counter	HMCS46CL	Hitachi	
x		x	x	x		44 I/O Lines, stand-by mode, on-chip counter	HMCS47C	Hitachi	
x		x	x	x		44 I/O Lines, stand-by mode, on-chip counter	HMCS47CL	Hitachi	10
x		x	x	x		32 I/O Lines, power-on-reset, on-chip LCD drive	LCD-III	Hitachi	
x		x	x	x		32 I/O Lines, power-on-reset, on-chip LCD drive	LCD-IV	Hitachi	
x		x	x	x		Same as COP2440 except no on chip ROM and faster execution time (4μs). Interfaces with MM2716 EPROM. COP2304 is extended temperature range device.	COP2404	National	
x					Eurotechnique	Dual CPU microcontroller, programmable counter, zero crossing detector serial I/O port. 35 I/O lines, COP23XX extended temperature range.	COP2440	National	
x		x	x	x		Piggyback Microcontroller. Same as COP2440 except socket for development EPROM.	COP2440R	National	15
x					Eurotechnique	Same as COP2440 except 23 I/O lines.	COP2441	National	
x					Eurotechnique	Same as COP2440 except 19 I/O lines.	COP2442	National	
x		x	x	x		Romless microcontroller, emulated COP410L/COP411L, interfaces with external memory, will accept MM2716, NM27C16, MM2758A, MM2758B 1K byte accessories.	COP401L	National	
x		x	x	x		Same as COP401L except emulates COP413L with selected RC oscillator option.	COP401L-R13	National	
x		x	x	x		Same as COP401L except emulates COP413L with selected RC oscillator option.	COP401L-X13	National	20
x		x	x	x	Western Digital	Has piggyback EPROM socket. Will accept: MM2716, NM27C16, MM2758A, MM2758B. 1K byte accessable.	COP402	National	
x		x	x	x	Western Digital	Has piggyback EPROM socket. Will accept: MM2716, NM27C16, MM2758A, MM2758B. 1K byte accessable.	COP402M	National	
x		x	x	x	Western Digital	Has piggyback EPROM socket. Will accept MM2716, 2758A, 2758B or NM27C16 EPROM. 2K Byte accessable. Open drain memory interface drivers.	COP404LP	National	
x		x	x	x	Western Digital	Same as COP404LP except push pull memory interface drivers.	COP404LS	National	
x		x	x	x		4μs instruction cycle time, 20 I/O lines, 2 level subroutine stack, COP310C operates extended temperature range, COP210C operates full temperature range.	COP410C	National	25
x		x	x	x	Eurotechnique, Western Digital	16 I/O lines, 24 pins, COP310L has extended temperature range (−40°C to -85°C).	COP410L	National	
x		x	x	x		4μs instruction cycle time, 16 I/O lines, 2 level subroutine stack, COP311C operates extended temperature range, COP211C operates full temperature range.	COP411C	National	
x		x	x	x	Eurotechnique, Western Digital	13 I/O lines, 20 pins, COP311L has extended temperature range (−40°C to -85°C).	COP411L	National	
x		x	x	x		16 I/O lines, 20 pins COP313C has extended temperature range (-40°C to 85°C)	COP413C	National	
x		x	x	x		16 I/O lines, 20 pins COP313CH has extended temperature range.	COP413CH	National	30
x		x	x	x		15 I/O lines, 20 pins, COP313L has extended temperature range.	COP413L	National	
x		x	x	x	Eurotechnique, Western Digital	COP32X is extended temperature range version. Also available in smaller packages: COP421 series-24 pins, COP422 series-20 pins.	COP420	National	

Bold face indicates additional data is provided on the page noted.

MICROPROCESSORS (Cont'd)

General				Architecture									Hardware Support	
							(For Microcomputers Only)							
Data Word Size (bits)	Process Type	Supply Voltage (V)	No. of Pins	Instruction Word Size (bits)	Directly Addressable Memory (words)	No. of Basic Instructions	On-Chip RAM (bits)	On-Chip (P)ROM (bits)	DMA Capability	Maximum Clock Frequency (MHz)	Instruction Time Min/Max (µs)	No. of Interrupt Levels	Prototyping System	In-Circuit Emulator
4	NMOS	4.5-9.5	28	8	1K	49	64x4	1Kx8		2.1	4/dc	3	x	x
4	NMOS	4.5-6.3		8	1K	49	64x4	1Kx8		2.1		3	x	x
4	CMOS	3-5	28	8	1K		64x4	1Kx4		4	4/dc		x	x
4	CMOS	3-5	24	8	1K		64x4	1Kx4		4	4/dc		x	x
4	CMOS	2.4-5.0	20	8	1K		64x4	1Kx8		0.25	4/dc		x	x
4	NMOS	4.5-6.3	40	8	2K	49	160x4	2Kx8		1.0	4/10	4	x	x
4	NMOS	4.5-6.3	40	8	2K	49	160x4	2Kx8			4/10	4	x	x
4	NMOS	4.5-6.3	28	8	2K		160x4	2Kx8			4/10	4	x	x
4	NMOS	4.5-6.3	24	8	2K		160x4	2Kx8			4/10	4	x	x
4	CMOS	3-5	28	8	2K		128x4	2Kx4		4	4/dc		x	x
4	NMOS	4.5-6.3	28	8	2K	49	128x4	2Kx8		2.1	15/40	3	x	x
4	NMOS	4.5-6.3	28	8	2K	49	128x4	2Kx8		2.1	15/40	3	x	x
4	CMOS	3-5	24	8	2K		128x4	2Kx4		4	4/dc		x	x
4	NMOS	4.5-6.3	24	8	2K	49	128x4	2Kx8		2.1	15/40	3	x	x
4	NMOS	4.5-5.5	28	8	4K		256x4	4Kx8		1.0	4/20			
4	CMOS	5		8			96x4 max	2000 max		0.44			x	
4	CMOS	2.7-5.5	64	8		110	256x4			0.28	6.67		x	x
4	CMOS	2.7-5.5	64	8		63	96x4	1Kx8		0.28	6.67	4	x	x
4	CMOS	2.7-5.5	64	8		92	128x4	2Kx8		0.28	6.67	4	x	x
4	CMOS	2.7-5.5	64	8		92	224x4	4Kx8		0.28	6.67	4	x	x
4	CMOS	2.7-5.5	28/52	8		58	64x4	1Kx8		0.28	10	2	x	x
4	CMOS	2.7-5.5	40/52	8		92	128x4	2Kx8		0.28	10	4	x	x
4	CMOS	2.7-5.5	40/52	8		91	128x4	2Kx8		0.28	10	4	x	x
4	CMOS	2.7-5.5	28/40	8		92	224x4	4Kx8		0.28	10	4	x	x
4	CMOS	2.7-5.5	40	8		92	208x4	4Kx8		0.28	10	4	x	x
4	CMOS	2.7-5.5	64	8		92	256x4	4Kx8		0.2	10	4	x	x
4	PMOS	−6 to -10	28	8	750	47	48x4	768		0.45			x	x
4	CMOS	3-6	42	8	—	98	128x4	—		2	16	2	x	x
4	CMOS	3-6	42	8	2K	98	128x4	2K		2	16	2	x	x
4	CMOS	4-6	60	8	1536	52	40x4	1536x8		4	8/16		x	x
4	CMOS	5	40	8	1536	52	32x4	1280x8		4	8/16		x	x
4	CMOS	3-6	42	8	1280	49	64x4	1280x8		4	8/16	2	x	x
4	NMOS	5	40	8	1024	75	64x4	1024		0.45	10/20	1		
4	NMOS	5	28	8	768	57	32x4	768		0.45	10/20	1	x	x
4	NMOS	5	18	8	512	50	16x4	512		0.45	10/20	1	x	x
4	NMOS	5	16	8	512	48	16x4	512		0.45	10/20	1	x	x

Software Support					Alternate Sources	Comments	Device	Source	Line
Cross Assembler	High Level Language	Programs							
		Debug	Diagnostic	Edit					
x		x	x	x	Eurotechnique, Western Digital	Same as COP420 except 23 I/O lines.	COP420L	National	
x		x	x	x		Basically the same as COP420 except piggyback microcontroller. CPU, RAM, I/O and EPROM socket. Accepts: MM2716, NMC27C16, MM2758A, MM2758B. 1K byte accessable.	COP420R	National	
x		x	x	x		23 I/O lines. COP324C has extended temperature range (−40°C to 85°C).	COP424C	National	
x		x	x	x		COP424C less 4 general-purpose inputs.	COP425C	National	
x		x	x	x		COP424C less eight general purpose inputs.	COP426C	National	5
x		x	x	x	Eurotechnique	CPU version of COP2440 series, COP340 is extended temperature range version. 40 pins. 35 I/O lines.	COP440	National	
x		x	x	x		Piggyback Microcontroller: CPU, RAM, I/O and EPROM socket. Accepts: MM2716, NMC27C16, MM2758A, MM27588 EPROMs. Same electrical specs as base P/N.	COP440R	National	
x		x	x	x	Eurotechnique	CPU version of COP2440 series, COP341 is extended temperature range version. 28 pins. 23 I/O lines.	COP441	National	
x		x	x	x	Eurotechnique	CPU version of COP2440 series, COP342 is extended temperature range version. 24 pins. 19 I/O lines.	COP442	National	
x		x	x	x		23 I/O Lines. COP344C has extended temperature range (−40°C to 85°C).	COP444C	National	10
x		x	x	x	Eurotechnique, Western Digital	28 pins, 16 I/O lines.	COP444L	National	
x		x	x	x		Piggyback Microcontroller: CPU, RAM, I/O and EPROM socket. Accepts: MM2716, NMC27C16, MM2758A, MM27588 EPROMs. Same electrical specs as base P/N.	COP444LR	National	
x		x	x	x		COP444C less 4 general-purpose inputs.	COP445C	National	
x		x	x	x	Eurotechnique, Western Digital	24 pin package, no interrupt, 12 I/O lines.	COP445L	National	
						CPU, 23 I/O lines, COP384 has extended temperature range.	COP484	National	15
x						μCOM-4 single chip microprocessor family. Consists of 14 individual devices with various RAM, ROM, I/O subroutine stack level options.	μCOM-4	NEC	
x	x	x	x	x		ROM-less evaluation chip, 8-bit timer/counter, 8-bit serial interface, 32 I/O lines	μPD7500	NEC	
x	x	x	x	x			μPD7501	NEC	
x	x	x	x	x			μPD7502	NEC	
x	x	x	x	x			μPD7503	NEC	20
x	x	x	x	x		Eight-bit timer/counter, 8-bit serial interface, 32 I/O lines	μPD7506	NEC	
x	x	x	x	x		Eight-bit timer/counter, 8-bit serial interface, 22 I/O lines	μPD7507	NEC	
x	x	x	x	x		Eight-bit timer/counter, 8-bit serial interface, 20 I/O lines	μPD7507S	NEC	
x	x	x	x	x		Eight-bit timer/counter, 8-bit serial interface, 40 I/O lines	μPD7508	NEC	
x	x	x	x	x		Vacuum fluorescent display driver, 8-bit timer/counter, 8-bit serial interface, 32 I/O lines	μPD7508A	NEC	25
x	x	x	x	x		Vacuum fluorescent display driver, 14-bit D/A, 28 I/O lines	μPD7519	NEC	
x	x	x	x	x		Directly drives 8 digit, 8 segment LED display, 24 I/O lines.	μPD7520	NEC	
x		x	x	x		Evaluator chip for Series 40 microcomputers.	**MSM5840**	**OKI (4732)**	
x		x	x	x		30 I/O lines, 8-Bit programmable timer.	**MSM5840RS**	**OKI (4732)**	
x		x	x	x		13 I/O lines, 40 LCD segment outputs, 12-bit timer.	**MSM58421GS**	**OKI (4732)**	30
x		x	x	x		9 I/O lines, 24 Vacuum Fluorescent segment outputs, 8-bit timer.	MSM584223RS	OKI	
x		x	x	x		30 I/O lines, 8-bit timer/counter.	MSM5845	OKI	
x		x	x	x		All the MN14XX series members are available in at least one other process type.	MN1400	Panasonic	
x		x	x	x		All the MN14XX series members are available in at least one other process type.	MN1402	Panasonic	
x		x	x	x		All the MN14XX series members are available in at least one other process type.	MN1403	Panasonic	35
x		x	x	x		All the MN14XX series members are available in at least one other process type.	MN1404	Panasonic	

Bold face indicates additional data is provided on the page noted.

MICROPROCESSORS (Cont'd)

General				Architecture									Hardware Support	
							(For Microcomputers Only)							
Data Word Size (bits)	Process Type	Supply Voltage (V)	No. of Pins	Instruction Word Size (bits)	Directly Addressable Memory (words)	No. of Basic Instructions	On-Chip RAM (bits)	On-Chip (P)ROM (bits)	DMA Capability	Maximum Clock Frequency (MHz)	Instruction Time Min/Max (µs)	No. of Interrupt Levels	Prototyping System	In-Circuit Emulator
4	NMOS	5	40	8	2048	75	128x4	2048		0.45	10/20	2	x	x
4	PMOS	– 15	40	8	1024	75	64x4	1024		0.3	15/30	1	x	x
4	PMOS	– 15	28	8	768	57	32x4	768		0.3	15/30	1	x	x
4	PMOS	– 15	40	8	2048	75	128x4	2048		0.3	15/30	2	x	x
4	CMOS	5	40	8	1024	75	64x4	1024		0.5	10/20	1	x	x
4	CMOS	5	18	8	512	50	16x4	512x8		0.5	10/20	1	x	x
4	CMOS	5	16	8	512	48	16x4	512x8		0.5	10/20	1	x	x
4	CMOS	5	40	8	2K	75	128x4	2Kx8		0.5	10/20	1	x	x
4	NMOS	5	40	8	1K	68	64x4			0.45	10/20	1	x	x
4	NMOS	5	64	8	2K	75	64x4			0.45	10/20	1	x	x
4	NMOS	5	64	8	2K	75	128x4			0.45	10/20	1	x	x
4	NMOS	5	40	8	4K	124	152x4	1536x8		4	2/4	4	x	x
4	NMOS	5	40	8	4K	124	152x4	2048x8		4	2/4	4	x	x
4	NMOS	5	40	8	4K	124	256x4	4096x8		4	2/4	4	x	x
4	NMOS	5	64	8	4K	124	152x4	2048x8		4	2/4	4	x	x
4	NMOS	5	64	8	4K	124	256x4	4096x8		4	2/4	4	x	x
4	CMOS	3-5		8	2K		128x4	2Kx4		0.03	30	4	x	x
4	CMOS	1.5	60	12	3K	54	64x4	1024x12		0.04	122	3	x	x
4	CMOS	1.5-3	80	10	7.5K	58	128x4	3072x10		0.04	122	4	x	x
4	CMOS	5	28	8	1K	43	64x4	1Kx8		0.6	15/60		x	
4	CMOS	5	40	8	1K	43	64x4	1Kx8		0.6	15/60		x	
4	CMOS	5	60	8	1K	54	96x4	2Kx8		0.3	6/120		x	
4	PMOS	–9	28	8	1134	58	64x4	1134		0.4 *	10	x		x
4	PMOS	–9	60	9	2032	90	128x4	2032		0.4 *	10	1		
4	PMOS	–9	60	9	4064	90	192x4	4064		0.4 *	10	1	x	
4	PMOS	–9	60	9	4064	90	192x4	4064			10	3	x	
4	PMOS	–9	44	8	1536	54	64x4	1336		0.8	10		x	
4	NMOS	5	60	9	3072	100	128x4 + 16	3072		0.262 *	10	1	x	
4	PMOS	– 15	60	8	2268	57	128x4	2268		0.2 *	10		x	
4	CMOS	–3	60	8	2268	54	96x4	2268		0.032 *	61		x	
4	CMOS	–3	48	8	1197	52	6440	1197		0.032 *	61		x	

Software Support									
		Programs							
Cross Assembler	High Level Language	Debug	Diagnostic	Edit	Alternate Sources	Comments	Device	Source	Line
X		X	X	X		All the MN14XX series members are available in at least one other process type.	MN1405	Panasonic	
X		X	X	X		All the MN14XX series members are available in at least one other process type.	MN1430	Panasonic	
X		X	X	X		All the MN14XX series members are available in at least one other process type.	MN1432	Panasonic	
X		X	X	X		All the MN14XX series members are available in at least one other process type.	MN1435	Panasonic	
X		X	X	X		All the MN14XX series members are available in at least one other process type.	MN1450	Panasonic	5
X		X	X	X		All the MN14XX series members are available in at least one other process type.	MN1453	Panasonic	
X		X	X	X		All the MN14XX series members are available in at least one other process type.	MN1454	Panasonic	
X		X	X	X		All the MN14XX series members are available in at least one other process type.	MN1455	Panasonic	
X		X	X	X		All the MN14XX series members are available in at least one other process type.	MN1498	Panasonic	
X		X	X	X		All the MN14XX series members are available in at least one other process type.	MN1499	Panasonic	10
X		X	X	X		All the MN14XX series members are available in at least one other process type.	MN1499A	Panasonic	
X		X	X	X		All the MN15XX series members have bidirectional I/O lines, 8 bit counter/timer, 8 bit serial shift register, and power down feature to save contents of RAM.	MN1541	Panasonic	
X		X	X	X		All the MN15XX series members have bidirectional I/O lines, 8 bit counter/timer, 8 bit serial shift register, and power down feature to save contents of RAM.	MN1542	Panasonic	
X		X	X	X		All the MN15XX series members have bidirectional I/O lines, 8 bit counter/timer, 8 bit serial shift register, and power down feature to save contents of RAM.	MN1544	Panasonic	
X		X	X	X		All the MN15XX series members have bidirectional I/O lines, 8 bit counter/timer, 8 bit serial shift register, and power down feature to save contents of RAM.	MN1562	Panasonic	15
X		X	X	X		All the MN15XX series members have bidirectional I/O lines, 8 bit counter/timer, 8 bit serial shift register, and power down feature to save contents of RAM.	MN1564	Panasonic	
X		X	X	X		1/4 duty 32-segment LCD driver. Instruction set is same as TMS1000.	SMC1112	S-MOS	
X		X	X	X		2.5 μA operating current, 27-segment LCD driver.	SMC4151F	S-MOS	
X		X	X	X		5 μA operating current, 46-segment LCD driver.	SMC4170F	S-MOS	
X		X	X	X			**KS51000**	**Samsung (4746)**	20
X		X	X	X			KS51200	Samsung	
X		X	X	X			**KS52000**	**Samsung (4746)**	
							SM100	Sharp	
X						Built-in 8-bit A/D converter.	SM110	Sharp	
X							SM111	Sharp	25
X							SM114	Sharp	
X						Built-in display digit decoder.	SM120	Sharp	
X						Optionally expandable for external ROM/RAM.	SM200	Sharp	
X						Optionally expandable for external RAM.	SM3A	Sharp	
X						Optionally expandable for external RAM, built-in LCD driver circuit.	SM4A	Sharp	30
X						Built-in LCD driver.	SM500	Sharp	

Bold face indicates additional data is provided on the page noted.

MICROPROCESSORS (Cont'd)

General				Architecture									Hardware Support	
							(For Microcomputers Only)							
Data Word Size (bits)	Process Type	Supply Voltage (V)	No. of Pins	Instruction Word Size (bits)	Directly Addressable Memory (words)	No. of Basic Instructions	On-Chip RAM (bits)	On-Chip (P)ROM (bits)	DMA Capability	Maximum Clock Frequency (MHz)	Instruction Time Min/Max (μs)	No. of Interrupt Levels	Prototyping System	In-Circuit Emulator
4	CMOS	−3	60	8	2772	49	96x4 + 32x4	2772		0.032 *	61		x	
4	CMOS	−3	60	8	4032	55	128x4	4032		0.032 *	61		x	
4	CMOS	−5	64	9	3072	93	160x4 + 16x2	3072		0.27 *	11	1	x	
4	CMOS	−5	64	10	30K	93	168x4	30K	x	0.09 *	11	1	x	
4	CMOS	−1.5	80	8	2016	49	64x4 + 24x4	2016		0.032 *	91.6		x	
4	CMOS	−1.5	60	8	1260	45	32x4 + 20x4	1260		0.032 *	91.6		x	
4	CMOS	−4.5	60	8	2016	57	64x4 + 64x4	2016		0.12 *	16		x	
4	CMOS	5	48	8	1024	94	80x4	1024		2.5	1.6	5	x	
4	CMOS	5	60/64	8	2048	94	128x4	2048		2.5	1.6		x	
4	CMOS	5	60/64	8	4096	94	256x4	4096		2.5	1.6	5	x	
4	CMOS	3-5	48	8	8K	94	80x4	8K	x	2.5	1.6	5	x	
4	CMOS	3-5	60	8	16K	94	128x4	16K	x	2.5	1.6	5	x	
4	CMOS	3-5	60	8	32K	94	256x4	32K	x	2.5	1.6	5	x	
4	CMOS	3	64	8	4096	94	160x4	4096		0.032 *	6.6	5	x	
4	CMOS	5	60/64	9	4064	92	224x4	4064		2	2	4	x	
4	CMOS	5	16/18/20	8	508	40	32x4	508		2	2		x	
4	CMOS	5	16/18/20	8	1016	40	56x4	1016		2	2		x	
4	CMOS	−3	60	8	1827	51	65x4	1827		0.032 *	61			
4	CMOS	−3	60	8	14K	51	65x4	14K	x	0.032 *	61	—	x	
4	PMOS	− 15V		8	1K		64x4			0.4	15/60			
4	PMOS	− 15V		8	4K		128x4			0.55	11/60			
4	PMOS	− 15V		8	2K		128x4			.4	15/60			
4	PMOS	9,15	28	8	1K	43	64x4	1Kx8		0.4	15/60		x	x
4	PMOS	9,15	28	8	1K	43	64x4	1Kx8		0.4	15/60		x	
4	PMOS	9,15	28	8	2K	40	128x4	2Kx8		0.4	15/60		x	x
4	PMOS	9,15	28	8	2K	40	128x4	2Kx8		0.4	15/60		x	x
4	CMOS	3-6	40	8	1K	43	64x4	1Kx8		1	6/120		x	x
4	PMOS	9,15	40	8	1K	43	64x4	1Kx8		0.4	15/60		x	
4	PMOS	9,15	40	8	2K	40	128x4	2Kx8		0.4	15/60		x	x
4	PMOS	9	28	8	4K	41	128x4	4Kx8		0.55	11/60		x	x
4	PMOS	9	28	8	4K	41	128x4	4Kx8		0.55	11/60		x	x
4	PMOS	9	40	8	4K	41	64x4	4Kx8		0.55	11/60		x	x
4	PMOS	9	40	8	4K	41	64x4	4Kx8		0.55	11/60		x	x
4	PMOS	9	28	8	4K	43	64x4	4Kx8		0.4	15/60		x	x
4	CMOS	4-6		8	4K		160x4			0.2			x	

Software Support					Alternate Sources	Comments	Device	Source	Line
Cross Assembler	High Level Language	Programs							
		Debug	Diagnostic	Edit					
x						Multi LCD display. Built-in LCD driver.	SM510	Sharp	
x						Built-in melody generator circuit and LCD driver.	SM511	Sharp	
x						Optionally expandable for external RAM.	SM520	Sharp	
x		x					SM525	Sharp	
x						Built-in melody generator circuit and LCD driver circuit.	SM530	Sharp	5
x						Built-in LCD driver circuit.	SM531	Sharp	
x						Built-in LCD driver circuit. Capable of Dot Matrix display.	SM540	Sharp	
x						Capable of driving at 3V. Serial input/output.	SM550	Sharp	
x						Capable of driving at 3V. Serial input/output.	SM551	Sharp	
x						Capable of driving at 3V. Serial input/output.	SM552	Sharp	10
x		x					SM555	Sharp	
x		x					SM556	Sharp	
x		x					SM557	Sharp	
x						Built-in LCD driver circuit.	SM563	Sharp	
x						Capable of driving at 3V. Built-in A/D converter.	SM573	Sharp	15
x						High-speed, low-end type.	SM590	Sharp	
x						High-speed, low-end type.	SM591	Sharp	
x						Built-in LCD driver.	SM5A	Sharp	
x		x					SM5L	Sharp	
						ROMless system evaluator supports TMS1000/1070/1200/1270/1700 PMOS family members.	SE1000P	TI	20
						ROMless system evaluator supports TMS1400/1470/1600/1670 PMOS family members.	SE1400P	TI	
						ROMless system evaluator supports TMS1100/1170/1300/1370 PMOS family members.	SE2200P	TI	
x		x	x	x		64 pin version, TMS-1099/SE-1, permits use of external PROM, RAM or ROM for program development. -9 volt VDD version available.	TMS1000	TI	
x		x	x	x		3.5 V output drive capability. -9 volt VDD version available.	TMS1070	TI	
x		x	x	x		A 64-pin version, TMS1098/SE-2 permits use of external PROM/RAM/ROM for program development. -9 volt VDD version available.	TMS1100	TI	25
x		x	x	x		Fluorescent drive capability otherwise same as TMS1100. -9V VDD version available.	TMS1170	TI	
x		x	x	x		3 level subroutine nesting 32 term output PLA. TMS1099/C/SE-3 for program development.	TMS1200C	TI	
x		x	x	x		3.5 V output drive capability. -9 volt VDD version available.	TMS1270	TI	
x		x	x	x		27 I/O lines, fluorescent drive capability. -9V VDD version available.	TMS1370	TI	
x		x	x	x		Expanded memory version of TMS1000. -9V VDD version available.	TMS1400	TI	30
x		x	x	x		Vacuum fluorescent drive version of TMS1400. -9V VDD version available.	TMS1470	TI	
x		x	x	x		32 I/O lines. -9V VDD version available.	TMS1600	TI	
x		x	x	x		Vacuum fluorescent drive version of TMS1600. -9V VDD version available.	TMS1670	TI	
x		x	x	x		21 I/O lines, increased ROM version of TMS1000. -9V VDD version available.	TMS1700	TI	
x						Evaluator chip for TLCS-46A series microprocessors. Use with external 4K ROM, 34 I/O lines.	TCP4600AC	Toshiba	35

Bold face indicates additional data is provided on the page noted.

MICROPROCESSORS (Cont'd)

General				Architecture									Hardware Support	
							(For Microcomputers Only)							
Data Word Size (bits)	Process Type	Supply Voltage (V)	No. of Pins	Instruction Word Size (bits)	Directly Addressable Memory (words)	No. of Basic Instructions	On-Chip RAM (bits)	On-Chip (P)ROM (bits)	DMA Capability	Maximum Clock Frequency (MHz)	Instruction Time Min/Max (µs)	No. of Interrupt Levels	Prototyping System	In-Circuit Emulator
4	NMOS	5		8	2K		128x4			0.5			x	
4	NMOS	5		8	4K		256x4			0.25			x	
4	NMOS	4.5-6.3	28	8	2K	49	64x4	1Kx8		4	4/10	3		
4	NMOS	4.5-6.3	24	8	2K	49	64x4	1Kx8		4	4/10	3		
4	NMOS	4.5-6.3	28	8	2K	49	64x4	1Kx8		4	4/10	3		
4	NMOS	4.5-6.3	24	8	2K	49	64x4	1Kx8		4	4/10	3		
4	PMOS	13.2	40											
4BS	TTL	5	40	9	User defined	16				10	115		x	
4BS	TTL/ECL	5		9	User defined	512				10			x	
4BS	TTL	5	48	4xN	User defined	16				8	174		x	
4BS	TTL	5	48	4xN	User defined	16				8	174		x	
4BS	CMOS	5	40	9	User defined	512				32				
4BS	CMOS	5	40	9	User defined	512				31				
4BS	CMOS	5	40	9	User defined	512				16				
4BS	TTL	5		3						14			x	
4BS	CMOS	3-15		4						4.9				
4BS	ECL	−2,−5.2		4		16							x	
4BS	ECL	−2,−5.2		8		16				10				
4BS	TTL	5	40	9	User defined					10			x	
4BS	TTL-LS	5	48	10	4XN					8	0.12		x	
4BS	TTL-S	5	48	10	4XN					10	0.10		x	
4BS	TTL	5	40	9	User defined	16				10	115		x	
4BS	TTL/ECL	5		9	User defined	512				10			x	
4BS	TTL	5	48	4xN	User defined	16				8	174		x	
8	NMOS	±5,12	40	8,16,24	65K	78				2	1.5/3.75	1		
8	NMOS	5	40	8,16,24	65K	80				3	0.8/1.3	4	x	x
8	NMOS	±5,12	40	8,16,24	65K	78				4	1.5/3.75			
8	CMOS	5	40	8,16,24	64K	246				5	1.28/8	5		
8	NMOS	5	40	8-24	4K	70	64x8	4Kx8		4		1	x	x
8	NMOS	5	40	8-24	4K	70	128x8	4Kx8		4		1	x	x
8	CMOS	5	40	8-24	4K	70	64x8	4Kx8		4		1		x
8	NMOS	5	40	8-24	2K	70	64x8	2Kx8		4		1	x	x
8	NMOS	5	40	8-24	2K	70	64x8	1K/2K/3K/4Kx8		4		ext.		x

Software Support									
		Programs							
Cross Assembler	High Level Language	Debug	Diagnostic	Edit	Alternate Sources	Comments	Device	Source	Line
x						Evaluator chip for TLCS-43 series microprocessors. Use with external 2K ROM, 35 I/O lines.	TMP4300C	Toshiba	
x						Evaluator chip for TLCS-47 series microprocessors. Use with external 4K ROM, 35 I/O lines.	TMP4700C	Toshiba	
					National	Microcontroller, serial I/O, counter/timer, 8-bit bidirectional port.	WD4200	Western	
					National	Same as WD4200, but no 4-bit IN port.	WD4210	Western	
					National	Extended temperature (−40 - 85°C) WD4200.	WD4320	Western	5
					National	Extended temperature (−40 - 85°C) WD4210.	WD4321	Western	
							WD55	Western	
x					Fairchild, National, NEC, Raytheon, Thomson		AM2901B	AMD	
x					Fairchild, NEC, National, Raytheon, Thomson	Eight function ALU. Four status flags. Microprogrammable. Interrupt requires AM2914 chip. 25% faster than AM2901B.	AM2901C	AMD	
x					Fairchild, NEC, National, Raytheon	Expandable register file. Built-in normalization and division logic. Built-in parity generation.	AM2903	AMD	10
x					Fairchild, NEC, National, Raytheon	Automatic BCD add, subtract and conversion between binary and BCD. Improved byte handling.	AM29203	AMD	
							CY2901B	Cypress	
							CY2901C	Cypress	
							CY7C901-32M	Cypress	
						Hardware stack with 9406, 10-Bit sequencer with 9408.	Macrologic Bipolar	Fairchild	15
							Macrologic CMOS	Fairchild	
							MC10800	Motorola	
					AMD, Fairchild, National, Raytheon		MC10902	Motorola	
					AMD, Fairchild, Motorola, NEC, Raytheon	Interrupt capability requires peripheral chip.	IDM2901A-2	National	
						24,780 Micro- and Macro-instructions.	SN74LS481	TI	20
						24,780 Micro- and Macro-instructions.	SN74S481	TI	
x					Fairchild, National, NEC, Raytheon		SFC-2901B	ThomsonCSF	
x					Fairchild, NEC, National, Raytheon	Eight function ALU. Four status flags. Microprogrammable. Interrupt requires AM2914 chip. 25% faster than AM2901B.	SFC-2901C	ThomsonCSF	
x					Fairchild, NEC, National, Raytheon	Expandable register file. Built-in normalization and division logic. Built-in parity generation.	SFC-2903	ThomsonCSF	
					Intel, NEC, National, Raytheon, Signetics, Mitsubishi	Priority interrupts with Intel 8214.	8080A	AMD	25
x	x	x	x	x	Intel, NEC, Mitsubishi	8085A-2 runs at 5 MHz.	8085A	AMD	
					Intel, NEC, National, Raytheon, Signetics, Mitsubishi	Priority interrupts with Intel 8214.	AM9080A	AMD	
					OKI, Harris	Hardware and software support widely available, compatible with NMOS 8085.	CA80C85B	Calmos	
x	x	x	x	x	SGS	Programmable hardware, timer-on-chip, 1K, 2K, 3K, 4K PROM versions available	XR-3870	Exar	
x	x	x	x	x	SGS	Programmable hardware, timer-on-chip, 1K, 2K, 3K, 4K PROM versions available	XR-3872	Exar	30
x	x	x	x	x		Programmable hardware, timer-on-chip, 1K, 2K, 3K, 4K PROM versions available	XR-38C70	Exar	
x	x	x	x	x		Programmable hardware, timer-on-chip, 1K, 2K, 3K, 4K PROM versions plus 2K EPROM and one time programmable PROM version available, executes F8 instruction set.	XR-38E70	Exar	
x	x	x	x	x	Mostek, Motorola	One chip microcomputer. Programmable hardware, timer on-chip. Software compatible with F8. Choice of ROM size.	XR3870	Exar	

Bold face indicates additional data is provided on the page noted.

MICROPROCESSORS (Cont'd)

General				Architecture									Hardware Support	
							(For Microcomputers Only)							
Data Word Size (bits)	Process Type	Supply Voltage (V)	No. of Pins	Instruction Word Size (bits)	Directly Addressable Memory (words)	No. of Basic Instructions	On-Chip RAM (bits)	On-Chip (P)ROM (bits)	DMA Capability	Maximum Clock Frequency (MHz)	Instruction Time Min/Max (µs)	No. of Interrupt Levels	Prototyping System	In-Circuit Emulator
8	NMOS	5	40	8-24	4K		128x8	1K/2K/3K/4Kx8		4			x	x
8	NMOS	5	40	8-24	2K	70	64x8	2Kx8		4		ext.		x
8	NMOS	5	68	8-48	1M	150			x	8		1	x	x
8	NMOS	5	68	8-48	1M	150			x	6		1	x	x
8	NMOS	5	40	8,16,24	64K	111	128x8			12	1/4	2	x	x
8	NMOS	5		8,16	4K		64x8			6	2.5/4.17	1		
8	NMOS	5		8,16	4K		128x8			6	2.5/4.17	1		
8	NMOS	5		8,16	4K		64x8	1Kx8		6	1.36/2.5	1		
8	NMOS	5	40	8,16,24	65K	111	128x8	4Kx8		12	1/4	2	x	x
8	CMOS	5	40	8,16	4K	98	128x8	2Kx8		6	2.5	1		
8	NMOS	5	40	8	64K	61	128	4096x8		5	2.4/19.2	3	x	x
8	NMOS	5	40	8	64K	61	128	4096x8		5	2.4/19.2	3	x	x
8	NMOS	5	18	12		29	32	256x12		4	2/10		x	x
8	NMOS	5	18	12	512x12	30	32x8	512x12		4	2/4		x	x
8	NMOS	5	28	12	512x12	30	32x8	512x12		1	4/8		x	x
8	NMOS	5	28	12		29	32	512x12		4	2/10		x	x
8	NMOS	5	40	13	1024x13	57	64x8	1024x13		8	1/2	1	x	x
8	NMOS	5	40	13	2048x13	57	64x8	2048x13		8	1/2	1	x	x
8	CMOS	5	28	12		31	32	512x12		3	3.3/6.6		x	x
8	NMOS	5	40	8	64K	61	128			5	2.4/19.2	3	x	x
8	NMOS	5	40	8	64K	61	128	2048x8		5	2.4/19.2	3	x	x
8	NMOS	5	40	8	64K	61	128x8	4Kx8		5	2.4/19.2	3	x	x
8	NMOS	5	40	8	64K	61	128x8	4Kx8		5	2.4/19.2	3	x	x
8	NMOS	5		8,16,24	64K	72			x	2	1/6	3	x	x
8	NMOS	5	40	8,16,24	64K	82	64x8	2Kx8		2	1/6	8	x	x
8	NMOS	5	40	8,16,24	64K	72	128x8		x	2	1/6	3	x	x
8	NMOS	5	40	8,16,24	64K	82	192x8			2	1.6/9.6	8	x	x
8	NMOS	5	28	8-24	2K	59	64x8	1100x8		2	1/5.5	3	x	
8	NMOS	5	40	8-32	64K	59			x	2	1/7.5	6	x	x
8	NMOS	5	40	8,16,24	64K		128x8			1.5			x	x
8	NMOS	5	40	8-32	64K				x	1.5		3	x	x

Software Support									
Cross Assembler	High Level Language	Programs							
		Debug	Diagnostic	Edit	Alternate Sources	Comments	Device	Source	Line
X	X	X	X	X	Mostek	Stand-by power down, 64 bytes of executable RAM available. Choice of ROM size.	XR3872	Exar	
X	X		X	X		2K EPROM program storage.	XR38E70	Exar	
	X	X	X	X	Intel	High integration 16-bit microprocessor with 8-bit bus, 2 independent DMA channels, 3 programmable 16 bit timers, programmable memory and chip-select logic, clock generator, object code compatible with MBL8086/8088 software.	**MBL80188**	**Fujitsu (1611)**	
	X	X	X	X	Intel	High integration 16-bit microprocessor with 8-bit bus, 2 independent DMA channels, 3 programmable 16 bit timers, programmable memory and chip-select logic, clock generator, object code compatible with MBL8086/8088 software.	**MBL80188-6**	**Fujitsu (1611)**	
X	X	X	X	X	Intel	Two 16-bit timer/counters, serial I/O port Boolean processor.	**MBL8031**	**Fujitsu (1611)**	5
						Intel	**MBL8035**	**Fujitsu (1611)**	
						Intel	**MBL8039**	**Fujitsu (1611)**	
						Intel	**MBL8048**	**Fujitsu (1611)**	
X	X	X	X	X	Intel	Two 16-bit timer/counters, serial I/O port Boolean processor, 4 K EPROM.	**MBL8051**	**Fujitsu (1611)**	
						Intel	**MBL80C39**	**Fujitsu (1611)**	10
X		X	X		TI	External memory expansion capability.	PIC-7040	GI	
X		X	X		TI	On-board serial port with internal/external baud rate generator external memory expansion capability.	PIC-7041	GI	
X		X	X			Pin for pin compatible with the PIC 1654. Available in 3 temperature ranges including -40°C to +110°C.	PIC1652	GI	
X		X	X		Plessey	All the features of the PIC1650A but with 12 I/O lines, crystal oscillator. Available in three temperature ranges including -40°C to 110°C.	PIC1654	GI	
X		X	X		Plessey	All the features of the PIC1650A but with 20 I/O lines.	PIC1655A	GI	15
X		X	X			PIC 1650A with 20 Bidirectional I/O lines. 2 μs instruction cycle time and mask programmable prescaler for RTCC.	PIC1657	GI	
X		X	X		Plessey	Expanded PIC1650 instruction set. 1024x13 bit program ROM. 64 8-bit registers, 6 level stack, 2 external interrupts. 32 I/O lines.	PIC1670	GI	
X		X	X		Plessey	Expanded PIC1650 instruction set. 2Kx13 bit program ROM. 64 8-bit registers, 6 level stack, 2 external interrupts. 32 I/O lines.	PIC1672	GI	
X		X	X			Mask programmable prescaler for RTCC. Very low power consumption in standby mode. 50μA max, power supply range (3.2V to 5.5V)	PIC16C58	GI	
X		X	X		TI		PIC7000	GI	20
X		X	X		TI	External memory expansion capability.	PIC7020	GI	
X		X	X			External memory expansion capability.	PIC7040	GI	
X		X	X			External memory expansion capability.	PIC7041	GI	
					Thomson-CSF, Fairchild, Hitachi	DMA through HALT and three state control.	S6800	GouldAMI	
					Thomson-CSF, Motorola, Hitachi	DMA thru HALT and three state control, software compatible with S6800.	S6801	GouldAMI	25
					Thomson-CSF, Fairchild, Motorola, Hitachi	Consists of S6800 with 6821 and 6875 on chip.	S6802	GouldAMI	
					Thomson-CSF, Motorola, Hitachi	ROMless version of S6801.	S6803	GouldAMI	
					Thomson-CSF, Hitachi, Motorola, Signetics	20 programmable bidirectional I/O lines, self check ROM.	S6805	GouldAMI	
					Thomson-CSF, Fairchild, Motorola, Hitachi	On chip oscillator, enhanced 6800 command set, compatible with entire S6800 family.	S6809	GouldAMI	
					Fairchild, Motorola, Hitachi, Fujitsu	Consists of S6800 with 6821 and 6875 on chip, CPU runs at 1.5 MHz.	S68A02	GouldAMI	30
					Fairchild, Motorola, Hitachi	On chip oscillator, enhanced 6800 command set, compatible with entire S6800 family. CPU runs at 1.5 MHz.	S68A09	GouldAMI	

Bold face indicates additional data is provided on the page noted.

MICROPROCESSORS (Cont'd)

General				Architecture										Hardware Support	
							(For Microcomputers Only)								
Data Word Size (bits)	Process Type	Supply Voltage (V)	No. of Pins	Instruction Word Size (bits)	Directly Addressable Memory (words)	No. of Basic Instructions	On-Chip RAM (bits)	On-Chip (P)ROM (bits)	DMA Capability	Maximum Clock Frequency (MHz)	Instruction Time Min/Max (µs)	No. of Interrupt Levels	Prototyping System	In-Circuit Emulator
8	NMOS	5	40	8-32	64K				x	2		3	x	x
8	NMOS	5,12		16,32,48	16M					3				
8	CMOS	5	40	8	65K	64				4	0.5/3.5	1		
8	CMOS	5	28	8	4K	64				4	0.5/3.5	1		
8	CMOS	5	28	8	8K	64				4		1		
8	CMOS	5	28	8	4K	64				4		1		
8	CMOS	5	28	8	4K	64				4		1		
8	CMOS	5	28	8	8K	64				4		1		
8	CMOS	5	40	8	65K	64			x	4		1		
8	CMOS	5		8	4K					4		1		
8	CMOS	5	28	8	8K	64			x	4		1		
8	CMOS	5	28	8	4K	64			x	4		1		
8	CMOS	5	28	8	4K	64			x	4		1		
8	CMOS	5	28	8	8K	64			x	4		1		
8	CMOS	5	40	8	65K	64				4		1		
8	CMOS	5	28	8	4K	64				4		1		
8	CMOS	5	40	8	65K	64				4		4		
8	CMOS	5	28	8	4K	64				4		4		
8	CMOS	5	28	8	8K	64				4		1		
8	CMOS	5	28	8	4K	64				4		1		
8	CMOS	5	60	8	64K		64x8	2Kx8		2		1	x	x
8	CMOS	3-6	40	8-24	65K	82	128x8	4Kx8	x	4	0.5-2.0	8	x	x
8	CMOS	5	40	8-24	65K	82	128x8	2Kx8	x	1			x	x
8	CMOS	3-6	40	8-24	4K	65	142x8	4Kx8	x	4	0.5-1.0	6	x	x
8	CMOS	5	64	8,16,24	16K	66	256x8		x	4	0.5/1.0	6	x	x
8	CMOS	3-6	40	8, 16, 24	65K	76	142x8	4Kx8		4	0.5-1.0	10	x	x
8	CMOS	3-6	40	8, 16, 24	65K	65	142x8	4Kx8		4	0.5-1.0	6	x	x
8	CMOS	5	40	8,16,24	65K	82	128x8		x	4	1.0	8	x	x
8	CMOS	5	64	8,16,24		65	256x8			4	0.5/1.0	6	x	x
8	NMOS	5	40	8-32	64K	59			x	2	1/7.5	6		
8	NMOS	5	40	8-24	64K	59			x	2	1/1	3		
8	NMOS	5	40	8,16,24	64K	72	128x8	4K/8Kx8	x	1.25	0.8/10	7	x	x
8	NMOS	5	40	8,16,24	65K	78	128x8		x	1.25	0.8/10	7	x	x
8	NMOS	5	40	8,16,24	4K	62	96x8	4K/8Kx8	x	4	1.0/10	9	x	x
8	CMOS	5	40	8-24	8 K	56	64x8	2Kx8		4MHz	0.5/3.5	4		x

Software Support					Alternate Sources	Comments	Device	Source	Line
	High Level Language	Programs							
Cross Assembler		Debug	Diagnostic	Edit					
					Fairchild, Motorola, Hitachi	On chip oscillator, enhanced 6800 command set, compatible with entire S6800 family. CPU runs at 2 MHz.	S68B09	GouldAMI	
					SMC	8 bit data bus, 16 bit internal operations. Software compatible with TMS9900.	S9980A	GouldAMI	
					Rockwell	Pin compatible with NMOS 6500 processors, bus compatible with MC6800. On-board clock oscillator.	**G65SC02**	**GTEMicro (1615)**	
					Rockwell	Pin compatible with NMOS 6500 processors, bus compatible with MC6800.	**G65SC03**	**GTEMicro (1615)**	
					Rockwell	Pin compatible with NMOS 6500 processors, bus compatible with MC6800.	**G65SC04**	**GTEMicro (1615)**	5
					Rockwell	Pin compatible with NMOS 6500 processors, bus compatible with MC6800.	**G65SC05**	**GTEMicro (1615)**	
					Rockwell	Pin compatible with NMOS 6500 processors, bus compatible with MC6800.	**G65SC06**	**GTEMicro (1615)**	
					Rockwell	Pin compatible with NMOS 6500 processors, bus compatible with MC6800.	**G65SC07**	**GTEMicro (1615)**	
					Rockwell	Bus compatible with MC6800. On board clock oscillator.	**G65SC102**	**GTEMicro (1615)**	
						Bus compatible with MC6800.	**G65SC103**	**GTEMicro (1615)**	10
						Bus compatible with MC6800.	**G65SC104**	**GTEMicro (1615)**	
						Bus compatible with MC6800.	**G65SC105**	**GTEMicro (1615)**	
						Bus compatible with MC6800.	**G65SC106**	**GTEMicro (1615)**	
						Bus compatible with MC6800.	**G65SC107**	**GTEMicro (1615)**	
					Rockwell	Bus compatible with MC6800. On board clock oscillator.	**G65SC112**	**GTEMicro (1615)**	15
						Bus compatible with MC6800.	**G65SC115**	**GTEMicro (1615)**	
					Rockwell	Pin compatible with NMOS 6500 processors, bus compatible with MC6800.	**G65SC12**	**GTEMicro (1615)**	
					Rockwell	Pin compatible with NMOS 6500 processors, bus compatible with MC6800.	**G65SC13**	**GTEMicro (1615)**	
					Rockwell	Pin compatible with NMOS 6500 processors, bus compatible with MC6800.	**G65SC14**	**GTEMicro (1615)**	
					Rockwell	Pin compatible with NMOS 6500 processors, bus compatible with MC6800.	**G65SC15**	**GTEMicro (1615)**	20
x	x	x	x	x		Uses 65SC00 CPU, on board sine wave generator, 16 bit timer, bus compatible with 6800.	**G65SC150**	**GTEMicro (1616)**	
x		x	x	x	Motorola	CMOS version of HD6801, various options available on HD6301X, Y series.	HD6301V	Hitachi	
x		x	x	x		CMOS version of HD6803. Various options available on HD6303X family member chips.	HD6303	Hitachi	
x		x	x	x	Motorola	CMOS version of HD6805, various options available on HD6305U, X and Y series.	HD6305V	Hitachi	
x		x	x	x		HD6305X2 with 128 Bytes RAM also available.	HD6305Y2	Hitachi	25
x		x	x	x	Motorola	One time programmable and reprogrammable versions available.	**HD63701X**	**Hitachi (1634)**	
x		x	x	x	Motorola	One time programmable and reprogrammable versions available.	**HD63705V**	**Hitachi (1635)**	
x		x	x	x		Can be used with 2732/64 type EPROMs.	HD63P01M1	Hitachi	
x		x	x	x		External expandable memory device—Y1 available.	HD63P05Y0	Hitachi	
					AMI, Thomson-CSF, Fairchild	Various options available on HD6809X family member chips.	HD6809	Hitachi	30
						Same as HD6809, but with external clock, various options available on HD6809EX family member chips.	HD6809E	Hitachi	
x		x	x	x	Motorola	HD6801 with piggyback socket for EPROM 2732.	HD68P01M0	Hitachi	
x		x	x	x		64 Bytes RAM retainable on powerdown.	HD68P01V07	Hitachi	
x		x	x	x			HD68P05V07	Hitachi	
x						CMOS version of 6500/1	HY65C00/1	Hyundai	35

Bold face indicates additional data is provided on the page noted.

MICROPROCESSORS (Cont'd)

General				Architecture										Hardware Support	
							(For Microcomputers Only)								
Data Word Size (bits)	Process Type	Supply Voltage (V)	No. of Pins	Instruction Word Size (bits)	Directly Addressable Memory (words)	No. of Basic Instructions	On-Chip RAM (bits)	On-Chip (P)ROM (bits)	DMA Capability	Maximum Clock Frequency (MHz)	Instruction Time Min/Max (µs)	No. of Interrupt Levels	Prototyping System	In-Circuit Emulator
8	CMOS	5	40	8-24	16 K	74	192x8	4096x8		16MHz	0.25/1.75	10		x
8	CMOS	5	40	8-24	64 K	68				8MHz	0.125/0.875	2		x
8	HMOS	5	28	8,16	1K	70	64x8	1Kx8		3.58	8.38/16.8		x	x
8	HMOS	5	40	8,16,24	64K	111	128x8			12	1/4	2	x	x
8	HMOS	5	40	8,16,24	65K	111	256x8			12	1/4	2	x	x
8	HMOS	5	40	8,16	4K	96	64x8			11	1	1	x	x
8	HMOS	5	40	8,16	4K	96	128x8			11	1.4/2.8	2	x	x
8	HMOS	5	40	8	4K		256x8			11	1.4/2.8	1	x	x
8	HMOS	5	40	8,16	4K	96	64x8	1Kx8		8	1.4/2.8	1	x	x
8	HMOS	5	40	8,16	4K	96	128x8	2Kx8		11	1.4/2.8	1	x	x
8	HMOS	5	40	8	4K	96	256x8	4Kx8		11	1.4/2.8	1	x	x
8	HMOS	5	40	8,16,24	64K	111	128x8	4Kx8		12	4	2	x	x
8	HMOS	5	40	8,16,24	65K	111	256x8	8Kx8		12	1.4/2.8	2	x	x
8	NMOS	±5,12	40	8,16,24	65K	78				2	1.5/3.75	1	x	x
8	HMOS	5	40	8,16,24	65K	102				3,5,6	0.67/1.3	4	x	x
8	CHMOS	5	40	8,16,24	65K	111	128x8			12	1/4	5	x	x
8	CHMOS	5	40	8	4K	97	128x8			11	1.4/2.8	2	x	x
8	CHMOS	5	40	8	4K	97	128x8	2K		11	1.4/2.8	2	x	x
8	CHMOS	5	40	8,16,24	65K	111	128x8	4Kx8		12	1/4	5	x	x
8	HMOS	5	40	8,16	4K	111	64x8	1Kx8		11	1.3	1	x	x
8	HMOS	5	40	8,16,24	65K	111	128x8	4Kx8		12	4	2	x	x
8	HMOS	5	40	8,16	4K	96	64x8			8	1.9	2	x	x
8	HMOS	5	40	8,16	4K	96	128x8			8	1.9	2	x	x
8	CHMOS	5	40	8,16,24	64K	111	128x8			12	1/4	2	x	x
8	CHMOS	5	40	8,16	4K	97	128x8			11	1.4/2.8		x	x
8	CHMOS	5	40	8,16	4K	96	128x8	2x8		11	1.4/2.8	1	x	x
8	CHMOS	5	40	8,16,24	64K	111	128x8	4Kx8		12	1/4	2	x	x
8	HMOS	5	40	8,16,24	4K		128x8	2Kx8		11		2	x	x
8	CMOS	5	40	8, 16	4K	96	64x8			6	1.4/2.8	1		
8	CMOS	5	40	8, 16	4K	96	128x8			6	1.4/2.8	2		
8	CMOS	5	40	8, 16	4K	96	64x8	1Kx8		6	1.4/2.8	1		
8	CMOS	5	40	8, 16	4K	96	128x8	2Kx8		6	1.4/2.8	2		
8	NMOS	5	40	8,16	4K	96	64x8			6				
8	NMOS	5	40	8-16	4K	96	128x8			11		2	x	
8	NMOS	5	40	8,16	4K	96	128x8			6		1		
8	NMOS	5	40	8,16	4K	96	128x8	2Kx8		6		1		
8	NMOS	5	40	8-24	64K	80				3	1.4/2.8	4	x	x
8	NMOS	5	40	8	4K	96	256x8	4Kx8		11	1.4/2.8			
8	NMOS	5,12		8,16,24	64K		64x8	1Kx8		2		1	x	x

Software Support									
		Programs							
Cross Assembler	High Level Language	Debug	Diagnostic	Edit	Alternate Sources	Comments	Device	Source	Line
x						CMOS version of 6500/11	HY65C00/11	Hyundai	
x					GTE, NCR	CMOS 6502	HY65C02	Hyundai	
x		x	x	x	Signetics, NEC	Software subset of 8048, 21 I/O lines.	8021H	Intel	
x	x	x	x	x	AMD	Two 16 bit counters, serial I/O port Boolean processor.	8031AH	Intel	
x	x	x	x	x		Three 16-bit timer/counters. Serial I/O port.	8032	Intel	5
x		x	x	x		Can be used with external ROM and RAM. 27 I/O lines, 8-bit timer/counter.	8035AHL	Intel	
x		x	x	x	AMD	Can be used with external ROM and RAM.	8039AHL	Intel	
		x	x	x		27 I/O lines. Can be used with external RAM and ROM.	8040AHL	Intel	
x		x	x	x	AMD	1K ROM. 27 I/O lines. 8048H-1 has 11 MHz clock. Can be used with external RAM and ROM.	8048AH	Intel	
x		x	x	x	AMD, NEC, Fujitsu, Signetics, Mitsubishi	Can be used with external ROM and RAM.	8049AH	Intel	10
		x	x	x		27 I/O lines. Can be used with external RAM and ROM.	8050AH	Intel	
x	x	x	x	x	AMD	Two 16 bit counters, serial I/O port Boolean processor.	8051AH	Intel	
x	x	x	x	x		Three 16-bit timer/counters. Serial I/O port.	8052	Intel	
x	x	x	x	x	AMD, NEC, TI, National, Mitsubishi	8080A-1 runs at 3.125 MHz max, -2 runs at 2.63 MHz max.	8080A	Intel	
x	x	x	x	x	AMD	8085AH-1 runs 6 MHz, AH-2 runs 5 MHz. M8085AH Mil version.	8085AH	Intel	15
x	x	x	x	x	Intersil	Two 16 bit timer/counters, serial I/O port. Boolean processor. Can be used with external ROM or RAM.	80C31	Intel	
x		x	x	x	NEC, National, Toshiba	Low power operation. 27 I/O lines. Can be used with external RAM and ROM.	80C39	Intel	
		x	x	x		Low power operation. 27 I/O lines. Can be used with external RAM and ROM.	80C49	Intel	
x	x	x	x	x	Intersil	Two 16 bit timer/counters, serial I/O port. Boolean processor. Can be used with external ROM or RAM.	80C51	Intel	
x		x	x	x	AMD	1K EPROM. Can be used with external ROM and RAM.	8748H	Intel	20
x	x	x	x	x		Two 16 bit counters, serial I/O port Boolean processor, 4K EPROM.	8751H	Intel	
						CPU with power down mode. Can be used with external RAM or ROM.	M8035HL	Intel	
						CPU with power down mode. Can be used with external RAM or ROM.	M8039HL	Intel	
x		x	x	x		Two 16-bit timer/counters, serial port, Boolean processor, MIL temp.	M80C31	Intel	
x		x	x	x		27 I/O lines, 8-bit counter/timer. Can use external RAM or ROM, MIL temp.	M80C39	Intel	25
x		x	x	x		27 I/O lines, programmable ROM, 8-bit counter/timer. Can use external RAM or ROM, MIL temp.	M80C49	Intel	
x		x	x	x		M80C31 with mask programmable ROM, MIL temp.	M80C51	Intel	
						27 I/O lines, programmable ROM, 8-bit counter/timer. Can be used with external RAM or ROM.	M8749H	Intel	
					Intel		**IM80C35**	**Intersil (1645)**	
					Intel		**IM80C39**	**Intersil (1645)**	30
					Intel		**IM80C48**	**Intersil (1645)**	
					Intel		**IM80C49**	**Intersil (1645)**	
					Intel	27 I/O lines, can be used with external RAM and ROM.	M5L8035	Mitsubishi	
x	x	x	x	x	Intel, NEC, Signetics	Low standby power mode, slower clock speeds available. On-chip battery charging.	M5L8039-11	Mitsubishi	
					Intel, AMD, NEC, National		M5L8039-6	Mitsubishi	35
					Intel, AMD, NEC, National		M5L8049-6	Mitsubishi	
x	x	x	x	x	AMD, NEC, Intel	8080A compatible with multiplexed bus operation.	M5L8085A	Mitsubishi	
					Intel	27 lines I/O, can be used with external RAM and ROM.	M5M8050H	Mitsubishi	
x		x	x	x	Fairchild, SGS	Programmable timer.	MK3850	Mostek	

Bold face indicates additional data is provided on the page noted.

MICROPROCESSORS (Cont'd)

General				Architecture									Hardware Support	
							(For Microcomputers Only)							
Data Word Size (bits)	Process Type	Supply Voltage (V)	No. of Pins	Instruction Word Size (bits)	Directly Addressable Memory (words)	No. of Basic Instructions	On-Chip RAM (bits)	On-Chip (P)ROM (bits)	DMA Capability	Maximum Clock Frequency (MHz)	Instruction Time Min/Max (µs)	No. of Interrupt Levels	Prototyping System	In-Circuit Emulator
8	NMOS	5	40	8,16,24	4K	70	128x8	4Kx8		4	1/6.5	1	x	x
8	NMOS	5	40	8,16,24	2112	70	128x8	2Kx8		4	1/6.5	1	x	x
8	NMOS	5	40	8-36	65K	70				4	1/6.5	1	x	x
8	CMOS	3-6	40	8,16,24	8K	51	112			1	2/10	4	x	x
8	CMOS	3-6	40	8,16,24	64K	51	112			1	2/10	4	x	x
8	CMOS	3-6	28	8,16,24	2K	51	64x8	1089x8		1	2/10	4	x	x
8	CMOS	3-6	40	8,16,24	8K	51	112x8	2.1Kx8		1	2/10	4	x	x
8	CMOS	3-6	40	8,16,24	8K	51	112x8	2106x8		1	2/10	4	x	x
8	CMOS	3-6	28	8,16,24	2K	51	64x8	1.1x8		1	2/10	4	x	x
8	CMOS	3-6	28	8,16,24	2K	51	64x8	1080x8		1	2/10	4	x	x
8	CMOS	3-6	40	8,16,24	8K	51	112x8	2.1Kx8		1	2/10	4	x	x
8	NMOS	5	40	8,16,24	4K		128x8	4Kx8		4		1	x	x
8	NMOS	5	40	8,16,24	64K	72			x	2	1/6	3	x	x
8	HMOS	5			1M	56								
8	HMOS	5	40	8,16,24	64K	82	128x8	2Kx8		1	2/12	2	x	x
8	HMOS	5	40	8,16,24	64K	82	128x8	2Kx8		1.25	2/12	1	x	x
8	HMOS	5	40	8,16,24	64K	89	192x8	4Kx8		1.25	1.6/9.6	8	x	x
8	HMOS	5	40	8,16,24	64K	82	192x8	4Kx8		1.25	1	1	x	x
8	NMOS	5	40	8,16,24	64K	72	128x8			2	1/6	3	x	x
8	HMOS	5	40	8,16,24	64K	82	128x8			1	1.6/9.6	8	x	x
8	HMOS	5	40	8,16,24	64K	89	128x8			1	1.6/9.6	8	x	x
8	HMOS	5	40	8,16,24	64K	89	192x8			1.25	1.6/9.6	8	x	x
8	HMOS	5	40	8,16,24	64K	82	192x8			1.25		1	x	x
8	HMOS	5	20	8,16,24	4K	42	32x8	0.5x8		0.9	0.6/14	3	x	x
8	HMOS	5	20	8,16,24	4K	42	32x8	1Kx8		0.9	0.6/14	3	x	x
8	HMOS	5	28	8,16,24	4K	42	32x8	1Kx8		0.9	0.6/14	3	x	x
8	HMOS	5	40	8,16,24	4K	59	96x8	2Kx8		1	2/11	3	x	x
8	HMOS	5	40	8,16,24	4K	59	96x8	3.7Kx8		1	2/11	3	x	x
8	HMOS	5	28	8,16,24	2K	59	64x8	1.1Kx8		2	1/5.5	3	x	x
8	HMOS	5	28	8,16,24	2K	59	112x8	1.1Kx8		2	2/11	3	x	x
8	HMOS	5	28	8,16,24	2K	59	64x8	1.8Kx8		2	2/11	3	x	x
8	HMOS	5	40	8,16,24	4K	59	64x8	2Kx8		1	2/11	3	x	x
8	HMOS	5	40	8,16,24	4K	59	64x8	3.8Kx8		1	2/11	3	x	x
8	HMOS	5	28	8,16,24	4K	59	64x8	1480x8		1	2/11	3	x	x
8	HMOS	5	28	8,16,24	4K	59	104x8	3.7Kx8		1	2/11	3	x	x
8	HMOS	5	28	8,16,24	4K	59	64x8	2.5Kx8		1.05	2/11	3		x

Software Support					Alternate Sources	Comments	Device	Source	Line
Cross Assembler	High Level Language	Programs							
		Debug	Diagnostic	Edit					
x		x	x	x	Fairchild, Motorola	One chip microcomputer. Programmable hardware, timer on-chip: 3K, 2K, 1K PROM versions available.	MK3870	Mostek	
x		x	x	x	Fairchild, Motorola	Programmable hardware timer, baud rate generator.	MK3873	Mostek	
x	x		x		NEC, Zilog	8080A software compatible, 25 MHz optional frequency.	MK3880	Mostek	
x		x	x	x	RCA	Single chip CPU and I/O, up to 8K external address space, 16 programmable bidirectional I/O lines, multiplexed bus.	MC146805E2	Motorola	
x		x	x	x		Single chip CPU and I/O, up to 64K external address space, multiplexed bus, 16 bidirectional I/O lines	MC146805E3	Motorola	5
x		x	x	x	RCA	20 I/O (16 programmable bidirectional) self check mode, EPROM version available.	MC146805F2	Motorola	
x		x	x	x	RCA	32 programmable bidirectional I/O lines. Self check mode, EPROM version available.	MC146805G2	Motorola	
x		x	x	x		Self check, frequency synthesis, audio tone output, dead man timer.	MC146805H2	Motorola	
x		x	x	x		EPROM version of 146805F2	**MC1468705F2**	**Motorola (1668)**	
x		x	x	x		Same as 1468705F2 except F5 has software security.	MC1468705F5	Motorola	10
x		x	x	x		32 programmable bidirectional I/O lines, bootstrap, EPROM version of 146805F2.	**MC1468705G2**	**Motorola (1668)**	
x			x		Fairchild, Mostek, SGS	Recommended replacement MC6805XX.	MC3870	Motorola	
x	x		x		AMI, Thomson-CSF, Fairchild, Hitachi	DMA through HALT and three state control, addressing modes.	**MC6800**	**Motorola (1660)**	
						MC68008 completely code compatible with MC68000. 32 bit internal architecture, general purpose machine.	**MC68008**	**Motorola (1654)**	
x	x	x	x	x	AMI, Hitachi, Fujitsu, Fairchild	On-chip clock, 16-bit timer, 31 parallel I/O lines.	**MC6801**	**Motorola (1664,1905)**	15
x	x	x	x	x			**MC6801-1**	**Motorola (1664,1905)**	
x	x	x	x	x		Serial I/O, 16-bit timer, SCI, 8 baud selectable, 32 bytes standby RAM.	**MC6801U4**	**Motorola (1666)**	
x	x	x	x	x		Serial I/O.	**MC6801U4-1**	**Motorola (1666)**	
x	x	x	x	x	AMI, Thomson-CSF, Fairchild, Hitachi	6800 CPU plus clock and RAM, 32 bytes standby RAM.	**MC6802**	**Motorola (1660)**	
x	x	x	x	x	AMI, Thomson-CSF, Hitachi	Expansion bus, ROMless 6801.	**MC6803**	**Motorola (1666)**	20
x	x	x	x	x		Serial I/O, timer, external clock, standby RAM.	**MC6803E**	**Motorola (1666)**	
x	x	x	x	x		Serial I/O, timer, ROMless 6801U4.	**MC6803U4**	**Motorola (1666)**	
x	x	x	x	x		Serial I/O, timer, expansion bus.	**MC6803U4-1**	**Motorola (1666)**	
x		x	x	x		20-pin version of MC6804P2	MC6804J1	Motorola	
x		x	x	x		20-pin version of 6804P2, extensive self check.	MC6804J2	Motorola	25
x	x	x	x	x	Signetics	20 bidirectional I/O lines, 64 byte data ROM, self check.	MC6804P2	Motorola	
x		x	x	x		128 bytes EEPROM, two 8-bit timers, 32 I/O, 16 bytes standby RAM, serial communication, port	MC6805K2	Motorola	
x		x	x	x		256 bytes EEPROM, two 8-bit timers, 32 I/O, 16 bytes standby RAM, serial communication port	MC6805K3	Motorola	
x		x	x	x	AMI, Thomson-CSF, Hitachi, Signetics	20 programmable bidirectional I/O lines, timer/counter.	MC6805P2	Motorola	
x		x	x	x	Signetics	20 I/O, standby RAM mode, EPROM version available.	MC6805P4	Motorola	30
x		x	x	x	Signetics	20 programmable bidirectional I/O lines, self check, EPROM version available.	MC6805P6	Motorola	
x		x	x	x	Thomson-CSF, Signetics	A/D on chip, 31 I/O lines.	MC6805R2	Motorola	
x		x	x	x	Signetics	4 channel 8-bit A/D converter, self check.	MC6805R3	Motorola	
x		x	x	x	Signetics	4-channel 8-bit A/D converter, SPI, watchdog timer, self check.	MC6805S2	Motorola	
x		x	x	x		Four timers, A/D converter, serial communication port	MC6805S3	Motorola	35
x		x	x	x	Signetics	19 I/O, on chip PLL, self check.	MC6805T2	Motorola	

Bold face indicates additional data is provided on the page noted.

MICROPROCESSORS (Cont'd)

General				Architecture									Hardware Support	
							(For Microcomputers Only)							
Data Word Size (bits)	Process Type	Supply Voltage (V)	No. of Pins	Instruction Word Size (bits)	Directly Addressable Memory (words)	No. of Basic Instructions	On-Chip RAM (bits)	On-Chip (P)ROM (bits)	DMA Capability	Maximum Clock Frequency (MHz)	Instruction Time Min/Max (μs)	No. of Interrupt Levels	Prototyping System	In-Circuit Emulator
8	HMOS	5	40	8,16,24	4K	59	64x8	2Kx8		1	2/11	3	x	x
8	HMOS	5	40	8,16,24	4K	59	112x8	3.8Kx8		1	2/11	3	x	x
8	NMOS	5	40	8,16,24	64K	72			x	2	1/6	3	x	x
8	HMOS	5	40	8-32	64K	59			x	2	1/7.5	6	x	x
8	HMOS	5	40	8-32	64K	59			x	2	1/7.5	6	x	x
8	HMOS	5	48	8,16,24	64K	82	128x8	2Kx8		1.25	1.6/9.6	8		x
8	HMOS	5	48	8,16,24	64K	82	128x8			1.25	1.6/9.6	8		x
8	NMOS	5	40	8,16,24	64K	82	128x8	2Kx8		1.25	0.8/2	8	x	x
8	HMOS	5	40	8,16,24	64K	89	192x8	4Kx8		1.25	1.6/9.6	8	x	x
8	HMOS	5	40	8,16,24	64K	89	192x8	4Kx8		1.25	1.6/9.6	8	x	x
8	HMOS	5	28	8,16,24	4K	42	32x8	1Kx8		0.9	0.6/14	3	x	x
8	HMOS	5	28	8,16,24	2K	59	112x8	1.8Kx8		1	2/11	3	x	x
8	HMOS	5	28	8,16,24	2K	59	112x8	1804x8		1	2/11	3	x	x
8	HMOS	5	40	8,16,24	4K	59	112x8	3.8K		1	2/11	3	x	x
8	HMOS	5	40	8,16,24	4K	59	112x8	3776x8		1	2/11	3	x	x
8	HMOS	5	28	8,16,24	4K	59	104x8	3.7Kx8		1	2/11	3	x	x
8	HMOS	5	40	8,16,24	4K	59	112x8	3.8Kx8		1	2/11	3	x	x
8	HMOS	5	40	8,16,24	4K	59	112x8	3776x8		1	2/11	3	x	x
8	HMOS	5	40	8,16,24	64K	82	128x8	2Kx8		1.5		2	x	x
8	HMOS	5	40	8,16,24	64K	82	128x8			1.5			x	x
8	HMOS	5	40	8,16,24	64K	82	128x8	2Kx8		2		2	x	x
8	HMOS	5	40	8,16,24	64K	82	128x8			2			x	x
8	CMOS	5	40	8,16,24	64K		128x8	4Kx8	x	1		8	x	
8	CMOS	5	40	16	64K		128x8		x	1		8	x	
8	CMOS	5	28	8,16,24	4K	42	32x8	1Kx8		11	0.15/14	2	x	x
8	CMOS	5	28	8,16,24	4K	42	128x8	1.7Kx8		11	0.15/14	2	x	x
8	CMOS	3-6	40	8,16,24	4K	60	176	4Kx8		2.1	2/11	3	x	x
8	CMOS	3-5	40	8,16,24	4K	59	176x8	7.7Kx8		2.1				
8	CMOS	3-6	48 or 52	8,16,24,32	64K	145	256x8	8Kx8		2,1	1/10	21	x	x
8	XMOS	5	40	8,16	4K	96	64x8			11	1.36	1		
8	NMOS	5	40	8,16	4K	96	64x8			11	1.36	1	x	x
8	XMOS	5	40	8,16	4K	97	128x8			11	1.36	1	x	x
8	XMOS	5	40	8,16	4K	97	128x8			11	1.36	1	x	x
8	XMOS	5	40	8,16	4K		256x8			11	1.36	1		
8	NMOS	5		8,16	4K		256x8			11	1.36	1	x	x
8	XMOS	5	40	8,16	4K		64x8	1Kx8		11	1.36	1		
8	NMOS	5		8,16	4K		64x8	1Kx8		11	1.36	1	x	x
8	XMOS	5	40	8,16	4K		128x8	2Kx8		11	1.36	1		
8	XMOS	5	40	8,16	4K		128x8	2Kx8		11	1.36	1		
8	XMOS	5	40	8,16	4K		256x8	4Kx8		11	1.36	1		
8	NMOS	5		8,16	4K		256x8	4Kx8		11	1.36	1		
8	XMOS	5	48	8-200	16M	133			x	10	0.3/	256	x	x

Software Support					Alternate Sources	Comments	Device	Source	Line
Cross Assembler	High Level Language	Programs							
		Debug	Diagnostic	Edit					
x		x	x	x	EFCIS, Signetics	32 I/O lines, self check.	MC6805U2	Motorola	
x		x	x	x	Signetics	24 bidirectional I/O, self check	MC6805U3	Motorola	
x	x	x	x	x	AMI, Thomson-CSF, Fairchild, Hitachi		**MC6808**	**Motorola (1660)**	
x	x	x	x	x	AMI, Thomson-CSF, Fairchild, Hitachi	On chip oscillator enhanced 6800 command set.	**MC6809**	**Motorola (1660,1905)**	
x	x	x	x	x	AMI, Thomson-CSF, Fairchild, Hitachi	External clocking for synchronization of multiprocessor systems.	**MC6809E**	**Motorola (1660,1905)**	5
x	x	x	x	x	Signetics	128 bytes of dual port RAM, Intelligent peripheral controller, SCI.	**MC68120**	**Motorola (1656,1663)**	
x	x	x	x	x	Signetics	128 bytes of dual port RAM.	**MC68121**	**Motorola (1656,1663)**	
x	x	x	x	x		2K bytes of EPROM.	**MC68701-1**	**Motorola (1666)**	
x	x	x	x	x		Serial I/O, timer, 4K EPROM on chip.	**MC68701U4**	**Motorola (1666)**	
x	x	x	x	x		Same as 68701U4 except includes software security.	MC68701U5	Motorola	10
x		x	x	x	Signetics	EPROM prototyping version of 6804P2.	**MC68704P2**	**Motorola (1669)**	
x		x	x	x		20 programmable bidirectional I/O lines. Self programming bootstrap, EPROM version for 6805P2, P4, P6.	MC68705P3	Motorola	
x		x	x	x		Same as 68705P3 except PS has software security.	MC68705P5	Motorola	
x		x	x	x		4 channel A/D, 31 I/O lines (24 programmable), EPROM.	MC68705R3	Motorola	
x		x	x	x		Same as 68705R3 except includes software security.	MC68705R5	Motorola	15
x		x	x	x		EPROM version of the MC6805S3	MC68705S3	Motorola	
x		x	x	x		32 I/O lines (24 programmable) EPROM.	MC68705U3	Motorola	
x		x	x	x		Same as 68705U3 except includes software security.	MC68705U5	Motorola	
x	x	x	x	x			MC68A01	Motorola	
x	x	x	x	x		Serial I/O, timer, expansion bus.	MC68A03	Motorola	20
x	x	x	x	x			MC68B01	Motorola	
x	x	x	x	x		Serial I/O, timer, expansion bus.	MC68B03	Motorola	
x					Hitachi		MC68HC01	Motorola	
x					Hitachi	same as 68HC01 without ROM	MC68HC03	Motorola	
x	x	x	x	x		CMOS version of 6804P2 with an enhanced timer	MC68HC04P2	Motorola	25
x	x	x	x	x		Larger ROM Version of 68HC04P2	MC68HC04P3	Motorola	
x		x	x	x		Single chip CPU, SCI SPI, 16-bit timer	**MC68HC05C4**	**Motorola (1668)**	
						68HC05C4 with 3.7K Bytes of additional ROM	MC68HC05C8	Motorola	
x	x	x	x	x		512 bytes EEPROM, 2 serial ports, 16-bit timer, pulse accumulator, 8-channel A/D	**MC68HC11**	**Motorola (1664,1666)**	
x		x	x	x	Intel, NEC, AMD, Fujitsu, Signetics	ROMless version of INS8048.	INS8035	National	30
x		x	x	x	Intel	Lowpower version of INS8035.	INS8035L	National	
x		x	x	x	Intel, NEC, AMD	ROMless version of INS8049.	INS8039	National	
x		x	x	x		Low power version of INS8039.	INS8039L	National	
x		x	x	x	Intel	ROMless version of INS8050.	INS8040	National	
x		x	x	x	Intel	ROMless version of INS8050L.	INS8040L	National	35
x		x	x	x	Intel, NEC, AMD		INS8048	National	
x		x	x	x	Intel	Lowpower version of INS8048.	INS8048L	National	
x		x	x	x	Intel, NEC, AMD	Lowpower standby mode, on-chip bettery charging.	INS8049	National	
x		x	x	x		Low power version of INS8049.	INS8049L	National	
x		x	x	x	Intel		INS8050	National	40
x		x	x	x	Intel		INS8050L	National	
x	x	x	x	x	Fairchild, TI	Full 32-bit internal architecture, 8-bit external data paths.	NS32008	National	

Bold face indicates additional data is provided on the page noted.

MICROPROCESSORS (Cont'd)

General				Architecture										Hardware Support	
							(For Microcomputers Only)								
Data Word Size (bits)	Process Type	Supply Voltage (V)	No. of Pins	Instruction Word Size (bits)	Directly Addressable Memory (words)	No. of Basic Instructions	On-Chip RAM (bits)	On-Chip (P)ROM (bits)	DMA Capability	Maximum Clock Frequency (MHz)	Instruction Time Min/Max (µs)	No. of Interrupt Levels	Prototyping System	In-Circuit Emulator
8	XMOS	5		8,16	4K		256	See comments		11				x
8	CMOS	5	40	8-32	64K	158				2.5	1.6/9.2	5	x	x
8	CMOS	5	40	8-32	64K	158				1	4/23	5	x	x
8	CMOS	5	40	8-32	64K	158				4	1/5.75	5	x	x
8	NMOS	5	40	8,16,24		56	64x8	2Kx8		2	1/3.5	4	x	x
8	NMOS	5	40	8,16,24	16K	60	192x8	3Kx8		2	1/3.5	10	x	x
8	CMOS	5	40	8,16,24		60	64x8	2Kx8		2	1/3.5	4	x	x
8	CMOS	5	40	8,16,24	64K	56				3	0.67/2.3	2	x	x
8	CMOS	5	40	16	1M	101			x	8		3		x
8	NMOS	5	40	8-32	64K	158	26x8			4	2	3		
8	NMOS	5	64	8-32	64K	140	128x8			1	2	5		
8	NMOS	5	64	8-32	64K	140	128x8	4Kx8		1	2			
8	NMOS	5	64	8-32	64K	140	64x8	6Kx8		1	2	5		
8	NMOS	5	64	8-32	65K	165	256x8		x	12				
8	NMOS	5	64	8-32	56K	165	256x8	1Kx8	x	12	1*			
8	NMOS	5	64	8-32	65K	153	256x8		x	12	1*			
8	NMOS	5	64	8-32	60K	153	256x8	512x8	x	12	1*			
8	CMOS	5	64	8-32	64K	101	128x8							
8	CMOS	5	64	8-32	64K	101	128x8	4Kx8						
8	NMOS	5	64	8-32	56K	165	256x8	1Kx8	x	12	1*			
8	NMOS	5	40	8-16	4K	96	64x8			6	2.5/5	1		
8	NMOS	5	40	8-16	4K	96	128x8			11	1.4/2.8	1	x	x
8	NMOS	5	40	8-16	4K	96	64x8	1Kx8		6	2.5/5	1		
8	NMOS	5	40	8-16	4K	96	128x8	2Kx8		11	1.4/2.8	1	x	x
8	NMOS	5	40	8,16,24	64K	80				5	1.4/2.8	4		
8	CMOS	2.5-6	40	8-16	4K	97	64x8			6	2.5/5	1	x	
8	CMOS	2.5-6	40	8-16	4K	97	64x8	1Kx8		6	2.5/5	1	x	
8	NMOS	5	40	8-16	4K		64x8	1Kx8		6	2.5/5	1		
8	CMOS	3-6	40	8-16	4K	97	64x8	1Kx8		6	2.5/5	1	x	x
8	CMOS	3-6	40	8-16	4K	97	128x8			11	1.4/2.8	1	x	x
8	CMOS	3-6	40	8-16	4K	97	64x8	1Kx8		6	2.5/5	1	x	x
8	CMOS	3-6	40	8,16,24	64K					3		1		
8	CMOS	4-10.5	40	8,16,24	64K	91			x	5.0		1	x	x
8	CMOS	4-10.5	40	8,16,24	64K	91			x	6.4		1	x	x
8	CMOS	4-6.5	40	8,16,24	64K	91			x	3.2		1	x	x
8	CMOS	4-6.5		8,16,24	64K	91			x	5	3.2/4.8	1	x	x
8	CMOS	4-6.5		8,16,24	64K	91			x	2.5	2.5	1	x	x
8	CMOS	4-6.5		8,16,24	64K	123	64x8	2Kx8	x	5	3.2/4.8	1	x	x
8	CMOS	4-6.5		8,16,24	64K	123	64x8		x	5	3.2/4.8	1	x	x
8	CMOS	4-6.5		8,16,24	64K	123	64x8		x	5	3.2/4.8	1	x	x
8	CMOS	3-6		8	8K		112			5	2.0/4.0	1	x	x
8	CMOS	5	40	8	64K	61				5	2	4		

Software Support					Alternate Sources	Comments	Device	Source	Line
Cross Assembler	High Level Language	Programs							
		Debug	Diagnostic	Edit					
x		x	x	x		Piggy-back microcomputer, emulates 8048/49/50, socket for program module and EPROM.	NS87P50	National	
x	x	x	x	x	SMC	Fully compatible with Z80 instruction set, power-save mode, system clock generator, NSC888 evaluation board available.	NSC800	National	
x	x	x	x	x	SMC	Fully compatible with Z80 instruction set, power-save mode, system clock generator, NSC888 evaluation board available.	NSC800-1	National	
x	x	x	x	x	SMC	Fully compatible with Z80 instruction set, power-save mode, system clock generator, NSC888 evaluation board available.	NSC800-4	National	
x	x	x	x	x	Rockwell	Software compatible with NCR6502, 32 I/O lines, 16-bit counter	**NCR6500/1**	**NCR (1671)**	5
x	x	x	x	x	Rockwell	On-board UART, two 16-bit counters, 32 I/O lines.	**NCR6500/11**	**NCR (1671)**	
x	x	x	x	x	Rockwell	CMOS version of NCR6500/1 with bit manipulation instructions	**NCR65C00/1**	**NCR (1671)**	
x	x	x	x	x	GTE, Rockwell	CMOS NCR6502	**NCR65C02**	**NCR (1671)**	
x	x	x	x	x	Zilog	High speed, CMOS 8088	µPD70108-8	NEC	
x	x			x	Mostek, Zilog	Z80 compatible, 158 instructions, 8080A software compatible, 26 bytes R/W memory, on chip dynamic RAM refresh circuitry.	µPD780	NEC	10
x	x			x	Mostek, Zilog		µPD7800	NEC	
						48 I/O Lines, 12-bit programmable timer.	µPD7801	NEC	
						48 I/O lines, 12-bit programmable timer, bus expansion capabilities.	µPD7802	NEC	
						16-Bit Multiple/Divide, ROM bus, USART	µPD7807	NEC	
						16-Bit Multiple/Divide, ROM bus, USART	µPD7809	NEC	15
						16-Bit ALU, A/D Converter, USART	µPD7810	NEC	
						16-Bit ALU, A/D Converter, USART	µPD7811	NEC	
						ROM-less µPD78C06.	µPD78C05	NEC	
						46 I/O Lines, 8-bit timer.	µPD78C06	NEC	
						16-Bit Multiply/Divide, EPROM, USART	µPD78P09	NEC	20
x				x	AMD, Intel, Signetics, Siemens	Can be used with external RAM and ROM, 27 I/O lines, 8 bit interval timer/counter.	µPD8035L	NEC	
		x	x	x	Fujitsu, Intel, Signetics	Can be used with external RAM and ROM, 27 I/O lines, programmable, interval timer. Pin compatible with 8039.	µPD8039L	NEC	
x				x	AMD, Intel, Signetics, Siemens	27 I/O lines, 8 bit interval timer/events counter.	µPD8048	NEC	
		x	x	x	Fujitsu, Intel, Signetics	Same as PD8039L but with 2K ROM.	µPD8049	NEC	
x	x		x		AMD, Mitsubishi, Intel	8080A compatible.	µPD8085A-2	NEC	25
x		x	x	x	Intersil	CMOS version of PD8035L.	µPD80C35	NEC	
x			x		Intersil, Intel	CMOS version of PD8048.	µPD80C48	NEC	
x				x	AMD, Intel, Signetics, Siemens	Same as PD8048 but with 1K EPROM.	µPD8748	NEC	
x		x	x	x	NEC, National	CMOS version of MSM8035, low stand by power mode.	**MSM80C35**	**OKI (4732)**	
x		x	x	x	NEC, National	CMOS version of MSM8039, low standby power mode.	**MSM80C39**	**OKI (4732)**	30
x		x	x	x	NEC, National	CMOS version of MSM8048, low stand by power mode.	**MSM80C48**	**OKI (4732)**	
						CMOS version of MSM8085A.	**MSM80C85A**	**OKI (4732)**	
	x	x	x	x	Hughes		**CDP1802**	**RCA (1673)**	
x	x	x	x	x	Hughes		**CDP1802A**	**RCA (1673)**	
x	x	x	x	x	Hughes		**CDP1802AC**	**RCA (1673)**	35
	x	x	x		Hughes		**CDP1802BC**	**RCA (1673)**	
	x	x	x	x	Hughes		**CDP1802C**	**RCA (1673)**	
x	x				Hughes	8-bit counter on board.	**CDP1804AC**	**RCA (1673)**	
x	x				Hughes	8-bit counter on board.	**CDP1805AC**	**RCA (1673)**	
x	x	x	x	x	Hughes	8-bit counter on board.	**CDP1806AC**	**RCA (1673)**	40
x	x				Motorola	Single chip CMOS CPU, 16 programmable bi-directional I/O lines.	**CDP6805E2**	**RCA (1673)**	
x					Motorola	Enhanced 6805E2	**CDP6805E3**	**RCA (1673)**	

Bold face indicates additional data is provided on the page noted.

MICROPROCESSORS (Cont'd)

General				Architecture									Hardware Support	
							(For Microcomputers Only)							
Data Word Size (bits)	Process Type	Supply Voltage (V)	No. of Pins	Instruction Word Size (bits)	Directly Addressable Memory (words)	No. of Basic Instructions	On-Chip RAM (bits)	On-Chip (P)ROM (bits)	DMA Capability	Maximum Clock Frequency (MHz)	Instruction Time Min/Max (μs)	No. of Interrupt Levels	Prototyping System	In-Circuit Emulator
8	CMOS	3-6		8	1089		64	1089		5	2.0/4.0	1	x	x
8	CMOS	3-6		8	2106		112	2106		5	2.0/4.0	1	x	x
8	NMOS	5	28	8,16,24	64K	56				2	1/7	2	x	x
8	NMOS	5	40	8,16,24	8K	56	64x8	2Kx8		2	1/7	4	x	x
8	NMOS	5	40	8,16,24	16K	60	192x8	3072x8		2	1/7	10	x	x
8	NMOS	5	64	8,16,24	16K	60	192x8	3072x8		2	1/7	10	x	x
8	NMOS	5	64	8,16,24	64K	60	192x8	256x8		2	1/7	10	x	x
8	NMOS	5	40	8, 16, 24	16K	60	192x8	4096x8		2	1/7	10	x	x
8	NMOS	5	64	8, 16, 24	16K	60	192x8	4096x8		2	1/7	10	x	x
8	NMOS	5	40	8,16,24	4K	60	64x8	1.5Kx8		2	1/7	7	x	x
8	NMOS	5	64	8,16,24	4K	60	64x8	1.5Kx8		2	1/7	7	x	x
8	NMOS	5	64	8,16,24	8K	60	64x8	256x8		2	1/7	8	x	x
8	NMOS	5	40	8,16,24	64K					2	0.5/3.5	2	x	x
8	NMOS	5	64	8,16,24	64K	60	192			2	1/7	10	x	x
8	CMOS	5	40	8-24	64K	68				4	0.5/3.5	2	x	x
8	CMOS	5	40	8-24	64K	68				4	0.5/3.5	2		
8	CMOS	5	40	8-24	64K	68				4	0.5/3.5	2		
8	CMOS	5	60	8	4K	104	128x8	4Kx8		4	1	5	x	x
8	NMOS	5	28	8,16,32	4K	56			x	2	0.25/40	1		
8	NMOS	5		8-32	64K					2.5				
8	NMOS	5	40	8	64K	158	x	x	x	2.5	1.6	2		x
8	NMOS	5	40	8	64K	158	x	x	x	4	1	2		x
8	NMOS	5	40	8	64K	158	x	x	x	6	0.67	2		x
8	NMOS	5	40	8	126K	43	128x8	16K	x	8	1.5	6	x	x
8	NMOS	5	64	8	126K	43	128x8	16K	x	8	1.5	6	x	x
8	NMOS	5	40	8	126K	43	128x8	16K	x	8	1.5	6	x	x
8	NMOS	5	40	8	124K	43	128x8	32K	x	8	1.5	6	x	x
8	NMOS	5	64	8	124K	43	128x8	32K	x	8	1.5	6	x	x
8	NMOS	5	40	8	124K	43	128x8	32K	x	8	1.5	6	x	x
8	NMOS	5	40	8	128K	43	128x8		x	8	1.5	6	x	x
8	CMOS	5	40	8	124K	45	144x8	32K	x	8	1.5	6	x	x
8	CMOS	5	64	8	64K	51	128x8	16K	x	4	1	5	x	x
8	CMOS	5	64	8	64K	51	192x8	32K	x	4	1	5	x	x
8	NMOS	5		8,16,24	32K					2			x	x
8	NMOS	5		8-16	1K		64x8	1Kx8		3	8.38/16.8		x	x
8	NMOS	5		8-16	4K	96	64x8			6	1.4/2.8	1		
8	NMOS	5		8-16	4K	96	128x8			11	1.4/2.8	1		
8	NMOS	5		8-16	4K	96	256x8			11	1.4/2.8	1		
8	NMOS	5		8-16	4K	90	64x8	1Kx8		6	1.4/2.8	1		
8	NMOS	5		8-16	4K	90	128x8	2Kx8		11	1.4/2.8	1		
8	NMOS	5		8-16	4K		256x8	4Kx8		11	1.4/2.8	1		
8	TTL	5		16	8K					8	0.2		x	x
8	TTL	5		16	8K					10			x	x
8	CMOS	5	28	8-16		90	256x8	0		12				

Software Support					Alternate Sources	Comments	Device	Source	Line
Cross Assembler	High Level Language	Programs							
		Debug	Diagnostic	Edit					
X	X				Motorola	Single chip CMOS CPU, 20 programmable bi-directional I/O lines, self check mode.	**CDP6805F2**	**RCA (1673)**	
X	X				Motorola	Single chip CMOS CPU, 32 programmable bi-directional I/O lines, self check mode.	**CDP6805G2**	**RCA (1673)**	
X	X	X	X	X	Fairchild	Bus compatible with 6800.	R6500	Rockwell	
X	X	X	X	X	NCR	Software compatible with R6502, 32 I/O lines, 16-bit counter.	R6500/1	Rockwell	
X	X	X	X	X	NCR	On board USART, two 16 bit counters, 32 I/O lines.	R6500/11	Rockwell	5
X	X	X	X	X	NCR	On board USART, two 16 bit counters, 56 I/O lines.	R6500/12	Rockwell	
X	X	X	X	X		On board USART, two 16 bit counters, 32 I/O lines.	R6500/13	Rockwell	
X	X	X	X	X		R6500/11 with 4K ROM	R6500/15	Rockwell	
X	X	X	X	X		R6500/12 with 4K ROM	R6500/16	Rockwell	
X	X	X	X	X		Asychronous host interface port, 16 bit counter, 23 I/O lines.	R6500/41	Rockwell	10
X	X	X	X	X		Asychronous host interface port, 16 bit counter, 47 I/O lines.	R6500/42	Rockwell	
X	X	X	X	X		Asychronous host interface port, 16 bit counter, 23 I/O lines.	R6500/43	Rockwell	
X	X	X	X	X		Bus compatible with 6800, 68000.	R6502	Rockwell	
X	X	X	X	X		On board USART, 16 bit counter, 32 I/O lines without pullups.	R6511Q	Rockwell	
					GTE, NCR	CMOS R6502	R65C02	Rockwell	15
					GTE	On-chip oscillator, bus three-state capability, quadrature clock, R6500 software compatibility.	R65C102	Rockwell	
						Slave processor, bus three-state capability	R65C112	Rockwell	
X		X	X	X		Contains zoo gate array for increased flexibility.	SMC8340F	S-MOS	
					GTE, Rockwell	On chip clock, IRQ, RYD bus compatible with MC6800.	L6505	SGS	
X	X	X	X	X		4 MHz optional.	Z80/A	SGS	20
X		X		X	Zilog		LH0080	Sharp	
X		X		X	Zilog		LH0080A	Sharp	
X		X		X	Zilog		LH0800B	Sharp	
X		X			Zilog	8 bit 1 chip microcomputer	LH0801	Sharp	
X		X			Zilog	Development Device	LH0802	Sharp	25
X		X			Zilog	Protopack Emulator	LH0803	Sharp	
X		X			Zilog	8 bit 1 chip microcomputer	LH0811	Sharp	
X		X			Zilog	Development Device	LH0812	Sharp	
X		X			Zilog	Protopack Emulator	LH0813	Sharp	
X		X			Zilog	ROMless Microcomputer	LH0881	Sharp	30
X		X			—		SM803	Sharp	
X		X			—		SM812	Sharp	
X		X			—		SM813	Sharp	
X		X	X	X		Any of the general purpose registers can be used as an index register.	2650A-1	Signetics	
		X	X	X	Intel		8021	Signetics	35
					AMD, Fujitsu, Intel, National, NEC		8035	Signetics	
					AMD, Fujitsu, Intel, National, NEC		8039	Signetics	
					AMD, Fujitsu, Intel, National, NEC		8040	Signetics	
					AMD, Fujitsu, Intel, National, NEC		8048	Signetics	
					AMD, Fujitsu, Intel, National, NEC		8049	Signetics	40
							8050	Signetics	
X			X			Bipolar with fixed instructions.	**8X300**	**Signetics (1742)**	
X		X	X	X	AMD		8X305	Signetics	
						I²C and NBAP Protocols	**SCC84C00**	**Signetics (1718)**	

Bold face indicates additional data is provided on the page noted.

Master Selection Guide

MICROPROCESSOR

MICROPROCESSORS (Cont'd)

General				Architecture									Hardware Support	
							(For Microcomputers Only)							
Data Word Size (bits)	Process Type	Supply Voltage (V)	No. of Pins	Instruction Word Size (bits)	Directly Addressable Memory (words)	No. of Basic Instructions	On-Chip RAM (bits)	On-Chip (P)ROM (bits)	DMA Capability	Maximum Clock Frequency (MHz)	Instruction Time Min/Max (μs)	No. of Interrupt Levels	Prototyping System	In-Circuit Emulator
8	CMOS	5	28	8-16		90	256x8	4Kx8		12				
8	CMOS	5	28	8-16		90	256x8	4Kx8		12				
8	CMOS	2.4-6	40	8-30	64K	150				2.5		5	yes	
8	CMOS	2.4-6	40	8-30	64K	150				1	1.6	5	yes	
8	CMOS	2.4-6	40	8-30	64K	150				4	1.0	5	yes	
8	NMOS	5	40	8	64K	61	256x8			8	1/12.5	6	x	x
8	SMOS	5	40	8	64K	61	128x8			8	1.6/19.2	4	x	x
8	NMOS	5	40	8	64K	61	256x8			8	1/12.5	6	x	x
8	SMOS	5	40	8	64K	61	128x8	2K		2.5	1.6/19.2	4	x	x
8	SMOS	5	40	8	64K	61	128	4K		2.5	1.6/19.2	4	x	x
8	SMOS	5	40	8	64K	61	128	4K		4	1.6/19.2	4	x	x
8	NMOS	5	40	8	64K	61	256x8	4096x8		8	1/12.5	6	x	x
8	CMOS	2-5.5	40	8	64K	61	256x8	4096x8		7.5	1.1/13.3	6	x	x
8	NMOS	5	40	8						3.6		2		
8	CMOS	3-5	40	8						3.6		2		
8	NMOS	5	40	8	64K	61	256x8	4096x8		5	1.6/19.6	6	x	x
8	NMOS	5	40	8,16,24	64K	72			x	2	1/6	3	x	x
8	HMOS	5			1M	56								
8	HMOS	5			1M	56								
8	HMOS	5	20	8,16,24	4K	42	32x8	1Kx8		11	0.6/14	3	x	x
8	HMOS	5	28	8,16,24	4K		32x8	1Kx8		11	0.6/14	3	x	x
8	HMOS	5	40	8,16,24	4K	59	64x8	2Kx8		1	2/11	3	x	x
8	CMOS	5	28	8,16,24	4K	42	128x8	1.7Kx8		11	0.15/14	2	x	x
8	NMOS	5	40	8-16	4K		64			6			x	x
8	NMOS	5	40	8-16	4K		128			11			x	x
8	NMOS	5		8-16	4K		64	1K		6			x	x
8	NMOS	5		8-16	4K			2K		11			x	x
8	NMOS	5		8,16,24	64K					3			x	x
8	NMOS	5		8,16,24	64K					5			x	x
8	CMOS	5		8-16	4K		128			11			x	x
8	NMOS	5	40	81632	64K	56			x	4	0.25/40	1		
8	NMOS	5	28	81632	8K	56				2				
8	NMOS	5	40	81632	64K	56				4		1		
8	CMOS	5	40	8	64K	64				4	.5/3.5	1		

Software Support									
Cross Assembler	High Level Language	Programs			Alternate Sources	Comments	Device	Source	Line
		Debug	Diagnostic	Edit					
						I^{2}C and NBAP Protocols	**SCC84C20**	**Signetics (1718)**	
						I^{2}C and NBAP Protocols	**SCC84C40**	**Signetics (1718)**	
					National	Fully Compatible with Z80 instruction set, on chip bus controller and clock generator	MPU800	SMC	
					National	Fully Compatible with Z80 instruction set, on chip bus controller and clock generator	MPU800-1	SMC	
					National	Fully Compatible with Z80 instruction set, on chip bus controller and clock generator	MPU800-4	SMC	5
x							SE70P162	TI	
	x					8 bit timer/event counter, optional memory expansion modules available to complement on chip ROM.	TMS7000	TI	
x							TMS7002	TI	
	x					8 bit timer/event counter, optional memory expansion modules available to complement on chip ROM.	TMS7020	TI	
	x					8 bit timer/event counter, optional memory expansion modules available to complement on chip ROM.	TMS7040	TI	10
	x					On chip UART serial port, 2 8-bit timer/counters, optional memory expansion modules available to complement on chip ROM.	TMS7041	TI	
x							TMS7042	TI	
x							TMS70C42	TI	
						Encryption, Federal Processing Standard	TMS7500	TI	
						Encrytion, Federal Processing Standard	TMS75C00	TI	15
x						On-board EPROM version.	TMS7742	TI	
x	x		x		AMI, Thomson-CSF, Fairchild, Hitachi	DMA through HALT and three state control, addressing modes.	EF6800	ThomsonCSF	
						MC68008 completely code compatible with MC68000. 32 bit internal architecture, general purpose machine.	EF68008-10	ThomsonCSF	
						MC68008 completely code compatible with MC68000. 32 bit internal architecture, general purpose machine.	EF68008-8	ThomsonCSF	
x		x	x	x		20-pin version of 6804P2, extensive self check.	EF6804J2	ThomsonCSF	20
x	x	x	x	x	Signetics	20 bidirectional I/O lines, 64 byte data ROM, self check.	EF6804P2	ThomsonCSF	
x		x	x	x	Signetics	4 channel 8-bit A/D converter, self check.	EF6805R3	ThomsonCSF	
x	x	x	x	x		Larger ROM Version of 68HC04P2	EF68HC04P3	ThomsonCSF	
		x	x	x	AMD, Intel, National, NEC, Fujitsu, Signetics		**TMP8035**	**Toshiba (1750)**	
		x	x	x	AMD, Intel, National, NEC, Fujitsu, Signetics		**TMP8039**	**Toshiba (1750)**	25
		x	x	x	AMD, Intel, NEC, Fujitsu, Signetics	8748 has U.V. PROM.	**TMP8048**	**Toshiba (1750)**	
		x	x	x	NEC, Fujitsu, Signetics		**TMP8049**	**Toshiba (1750)**	
x	x	x	x	x	AMD, Mitsubishi, NEC	8080A compatible with multiplexed bus operation.	**TMP8085A**	**Toshiba (1750)**	
x	x	x	x	x	AMD, Mitsubishi, NEC		**TMP8085A-2**	**Toshiba (1750)**	
x		x	x	x	NEC, National, OKI		**TMP80C39A**	**Toshiba (1750)**	30
					Rockwell	On-chip Clock, IRQ, NMI, RYD, BUS compatible with MC6800	UM6502	UMC	
					Rockwell	On-chip clock, RYD,BUS compatible with MC6800	UM6507	UMC	
					Rockwell	External clock, IRQ, NMI, RYD, BUS compatible with MC6800	UM6512	UMC	
					GTE, NCR, Rockwell		VL6502	VTI	

Bold face indicates additional data is provided on the page noted.

MICROPROCESSORS (Cont'd)

General				Architecture									Hardware Support	
							(For Microcomputers Only)							
Data Word Size (bits)	Process Type	Supply Voltage (V)	No. of Pins	Instruction Word Size (bits)	Directly Addressable Memory (words)	No. of Basic Instructions	On-Chip RAM (bits)	On-Chip (P)ROM (bits)	DMA Capability	Maximum Clock Frequency (MHz)	Instruction Time Min/Max (µs)	No. of Interrupt Levels	Prototyping System	In-Circuit Emulator
8	CMOS	5	40	8	64K	64				4	.5/3.5	1		
8	NMOS	5	40	8-32	64K	158			x	2.5		3	x	x
8	NMOS	5	40	8-32	64K	158			x	4		3	x	x
8	NMOS	5	40	8-32	64K	158			x	6	0.7/4.2	3	x	x
8	NMOS	5	40	8-32	64K	158			x	2.5		3	x	x
8	NMOS	5	40	8-32	500K				x	25		2		
8	NMOS	5												
8	NMOS	5	40	8,16,24	124K	129	128x8	2Kx8	x	4	2.2/4.25	6	x	x
8	NMOS	5	40	8,16,24	124K	129	128x8			4	2.2/4.25	6	x	x
8	NMOS	5	40	8,16,24	124K	129	128x8	4Kx8	x	12	1/2.8	6	x	x
8	NMOS	5	40	8,16,24	124K	129	128x8	4Kx8	x	4	1/1.5	6	x	x
8	NMOS	5	64	8,16,24	124K	129	128x8	NULL	x	12	1/2.8	6	x	x
8	NMOS	5	64	8-24	124K	129	128x8		x	4	1/1.5	6	x	x
8	NMOS	5	40	8,16,24	124K	129	128x8	NULL	x	12	1/2.8	6	x	x
8	NMOS	5	40	8-24	124K	129	128x8		x	4	1/1.5	6	x	x
8	NMOS	5	40	8-24	124K	129	128x8			4			x	x
8	NMOS	5	40	8,16,24	124K	129	128x8	NULL	x	12	1/2.8	6	x	x
8	NMOS	5	40	8-24	128K		128x8			4			x	x
8/16	CMOS	5	40	8	64K	91				8	1	2	x	x
8/16	CMOS	5	40	8-16	16M	91				8	1	2		
8/16	CMOS	5	40	8-32	16M	74				4MHz	0.1/0.7	5		x
8/16	CMOS	5	68	8-48	1M	101			x	8		8	x	x
8/16	HMOS	5	40	8-48	1M					8		1	x	x
8/16	HMOS	5	40	8-48	1M	46	144x8		x	5	0.4/4			
8/16	HMOS	5	40	8-48	1M	133				8	0.2/19	1		x
8/16	HMOS	5	40	8-48	1M	133				8				
8/16	HMOS	5	40	8-48	1M	46				5	0.4/4		x	
8/16	NMOS	5	40	8-48	1M		64x8			5				
8/16	I^{2}L	5	64	16,32,48	128K	73				4.4	1.37/13.6	17	x	
12	CMOS	5		12	32K					4				
12	PMOS	5		12,24	4K					1.2			x	
16	HMOS	5		8-48	1M					10				
16	TTL/ECL	5	52	8,16	User defined		32Kx16			10	0.1		x	
16	NMOS	5		16,32	48M					4			x	x
16	NMOS	5		16,32	384K					4			x	x
16	HMOS	5		8-48	1M					8				
16	HMOS	5		8-48	16M	150				8				

Software Support								
Cross Assembler	High Level Language	Programs						
		Debug	Diagnostic	Edit	Alternate Sources	Comments	Device	Source
					GTE, NCR, Rockwell		**VL65NC02**	**VTI (1751,1752,1753)**
x	x	x	x	x	Mostek, NEC, SGS, Sharp	8080A software compatible.	Z80	Zilog
x	x	x	x	x	Mostek, NEC, SGS, Sharp	8080A software compatible.	Z80A	Zilog
x	x	x	x	x	Mostek, NEC, SGS, Sharp	8080A software compatible.	Z80B	Zilog
x	x	x	x	x	Mostek, NEC, SGS, Sharp	Low power version of Z80, slower speeds available.	Z80L	Zilog
						The first of a series of processors. The devices are binary code compatible with the Z80 CPU. 8 and 16 bit multiple and divide.	Z8108	Zilog
							Z8601-12	**Zilog (1774)**
x	x	x	x	x	SGS, Sharp, GTE	On-chip UART, and 2 counter/timers. 4 external interrupts, 32 I/O lines.	**Z8601-MCU**	**Zilog (1774)**
x	x	x	x	x	SGS, Sharp, GTE	Program storage in separate 2716 EPROM, 4 external interrupts. Has piggyback 24-pin socket to program memory.	**Z8603-MCU**	**Zilog (1774)**
x	x	x	x	x		On-chip UART, 2 counter/timers, 32 I/O lines, 4 external interrupts.	Z8611-12	Zilog
x	x	x	x	x	SGS, Sharp, GTE	On-Chip UART and 2 counter/timers, 32 I/O lines. 4 external interrupts.	Z8611-MCU	Zilog
x	x	x	x	x		Development version, 4 external interrupts, ROMless Z8601-11.	Z8612-12	Zilog
x	x	x	x	x	SGS, Sharp, GTE	64 pin development version. 4 external interrupts. ROMless Z8601.	Z8612-MCU	Zilog
x	x	x	x	x		ROMless Z8. Has piggyback 24-pin socket for direct interface to program memory.	Z8613-12	Zilog
x	x	x	x	x	SGS, Sharp, GTE	ROMless Z8. Has piggyback 24-pin socket for direct interface to program memory. Permits program storage in separate EPROMs.	Z8613-MCU	Zilog
x	x	x	x	x		Single chip basic interpreter with Tiny Basic in ROM.	Z8671-MCU	Zilog
x	x	x	x	x		ROMless Z8.	**Z8681-12**	**Zilog (1775)**
x	x	x	x	x		ROMless Z8.	**Z8681-MCU**	**Zilog (1775)**
x		x	x	x	Western Design Center, Hyundai	Runs G65SC02 code.	**G65SC802**	**GTEMicro (1617)**
x				x	Western Design Center, Hyundai	Runs G65SC02 code.	G65SC816	GTEMicro
x					GTE	16-bit version of HY65C02	HY65C816	Hyundai
x	x	x	x	x	Zilog	High integration with several peripherals on chip. Upwards compatible with μPD70108, μPD70116.	μPD70208	NEC
x	x	x	x	x	Intel	Same part as iAPX88/10.	8088	AMD
					Intel	I/O processor, concentrator and intelligent DMA controller. 4 special purpose input interrupts, 2 DMA requests interrups, 2 general purpose interrupt outputs.	8089A-3	AMD
x	x	x	x	x	Intel, NEC	Same part as AM8088.	iAPX88/10	AMD
					Intel	Two chip set using iAPX88/10 plus 8087 numeric data processor.	iAPX88/20	AMD
		x	x	x	AMD	I/O processor concentrator and intelligent DMA controller. 4 special purpose input interrupts, 2 DMA request interrupts, 2 general purpose interrupt outputs.	8089	Intel
					AMD, Intel		μPD8088	NEC
	x	x	x	x		Mil temperature range.	**SBP9989**	**TI (731)**
					Intersil	PDP-8 instruction set compatible Fortrar, Basic, Focal, Pascal, available from outside vendors.	HM6100	Harris
x	x		x				TLCS-12A	Toshiba
					Intel, Fujitsu	Same part as iAPX86/10.	8086	AMD
x					Thompson/CSF	Three-operand ALU, 16-bit barrel shifter, instruction set optimized for high-performance intelligent controllers.	AM29116	AMD
x	x	x	x	x	Zilog	Segmented, single step mode.	Z8001	AMD
x	x	x	x	x	Zilog	Non-segmented, single step mode.	Z8002	AMD
					Intel	High performance-provides two times the performance of iAPX86. Upward compatible with iAPX86/88 software. 10 additional instruction types.	iAPX186	AMD
					Intel	High performance 80286 processor with memory management. Upward compatible with iAPX86, 88 and iAPX186 software.	iAPX286	AMD

Bold face indicates additional data is provided on the page noted.

MICROPROCESSORS (Cont'd)

General				Architecture									Hardware Support	
							(For Microcomputers Only)							
Data Word Size (bits)	Process Type	Supply Voltage (V)	No. of Pins	Instruction Word Size (bits)	Directly Addressable Memory (words)	No. of Basic Instructions	On-Chip RAM (bits)	On-Chip (P)ROM (bits)	DMA Capability	Maximum Clock Frequency (MHz)	Instruction Time Min/Max (µs)	No. of Interrupt Levels	Prototyping System	In-Circuit Emulator
16	HMOS	5		8-48	1M	133				10				
16	HMOS	5		8-48	1M					10				
16	I²L	5		16	32K					10			x	
16	I²L	5	40		64K					10				x
16	I²L	5	64	16	2M					20		16		x
16	I²L	5	64	16	2M					20		16		x
16	NMOS	5	68	8-48	1M	150			x	8		1	x	x
16	NMOS	5	68	8-48	1M	150			x	6		1	x	x
16	NMOS	5	68	8-48	16M	150				4			x	x
16	NMOS	5	68	8-48	16M	150				6			x	x
16	NMOS	5	68	8-48	16M	150				8			x	x
16	NMOS	5	40	8-48	1M	133				5			x	x
16	NMOS	5	40	8-48	1M	133				10			x	x
16	NMOS	5	40	8-48	1M	133				8			x	x
16	NMOS	±5,12		16-48	64K					3.3			x	
16	CMOS	5	40	8-48	1M					8			x	x
16	NMOS	5	64	16-80	16K	56			x	4	0.4	7		
16	CMOS	5	68	8	64K		0		x	20	0.05/2	1	x	
16	CMOS	5	68	8	64K		32K		x	20	0.05/2	1	x	
16	HMOS	5	68	8-48	1M	150			x	10		1	x	x
16	HMOS	5	68	8-48	1M	150			x	8	0.25/8.6	256		x
16	HMOS	5		8-48	16M					8	0.8			x
16	HMOS	5	40	8-48	1M	133				10	0.4/0.8		x	x
16	HMOS	5	40	1-4	500K	69				8	1.25/100	1	x	
16	HMOS	5		8-48	16M					8	0.8			x
16	CMOS	5	64	9	User-defined					4		opt.		
16	CMOS	5	64	9	User-defined					4		opt.		
16	NMOS	5	48	16	64K	87	256	4K	yes	6	.5/4	16	x	x
16	NMOS	5		8-48	1M					5				
16	CMOS	5	68	8-32	64K	54	256x8	4Kx8		16.8	0.24/6.8	8	x	x
16	XMOS	5		8-200	16M					6			x	
16	XMOS	5	48	8-200	16M	133			x	10	0.3/	256	x	x
16	XMOS	5	24			16				10				
16	XMOS	5	48			4				10				

Software Support					Alternate Sources	Comments	Device	Source	Line
Cross Assembler	High Level Language	Programs							
		Debug	Diagnostic	Edit					
					Mitsubishi, NEC, Mostek, Siemens, Intel, Fujitsu	Same part as AM8086.	iAPX86/10	AMD	
					Intel	Two chip set using iAPX86/10 plus AM8087 numeric data processor.	iAPX86/20	AMD	
x	x	x	x	x		Microcomputer performance. Multifunction instructions process several steps e.g. add/shift/check and skip.	F9440	Fairchild	
x	x	x	x	x			**F9445**	**Fairchild (1609)**	
x		x	x				**F9450C**	**Fairchild (1607)**	5
x		x	x				**F9450M**	**Fairchild (1607)**	
	x	x	x	x	Intel	High integration 16-bit microprocessor, 2 independent DMA channels, 3 programmable 16-bit timers, object code compatible with all MBL8086/88 software.	**MBL80186**	**Fujitsu (1611)**	
	x	x	x	x	Intel	See above comment	**MBL80186-6**	**Fujitsu (1611)**	
	x	x	x	x		High performance 16-bit microprocessor with on-chip memory management and protection, upward compatible with MBL8086/8088 software.	**MBL80286-4**	**Fujitsu (1611)**	
	x	x	x	x		See above comment	**MBL80286-6**	**Fujitsu (1611)**	10
	x	x	x	x		See above comment	**MBL80286-8**	**Fujitsu (1611)**	
	x	x	x	x	Mostek, Intel, Siemens, NEC	Assembly language compatible with 8080/8085.	**MBL8086**	**Fujitsu (1611)**	
	x	x	x	x	Mostek, Intel, Siemens, NEC	Assembly language compatible with 8080/8085.	**MBL8086-1**	**Fujitsu (1611)**	
	x	x	x	x	Mostek, Intel, Siemens, NEC	Assembly language compatible with 8080/8085.	**MBL8086-2**	**Fujitsu (1611)**	
					TI	Instructions include hardware multiply, divide, software compatible with 990 minicomputers.	S9900	GouldAMI	15
x	x	x	x	x	Intel	Multiply and divide, multibus system compatible, 3 MHz version available, available in industrial or military temperature ranges.	**80C86**	**Harris (682,1618,1631**	
					Motorola, Mostek, Rockwell, Signetics		HD68000R-4	Hitachi	
x	x	x	x	x		16-bit Transputer	IMST202	Inmos	
x	x	x	x	x		16-bit Transputer	IMST222	Inmos	
	x	x	x	x		High integration 16-bit microprocessor, 2 independent DMA channels, 3 programmable 16-bit timers, clock generator, object code compatible with all iAPX8086/8088 software.	80186	Intel	20
x	x	x	x	x	Fujitsu, AMD, Siemens		80188	Intel	
	x	x	x		AMD	High performance 80286 processor with memory management. Upward compatible with iAPX86, 88 software.	80286	Intel	
	x	x	x	x	NEC, Mostek, Siemens, AMD	8086 runs 5 MHz, -1 runs 10 MHz, -2 runs 8 MHz.	8086	Intel	
x	x	x	x	x		Numeric coprocessor for 8086, 8088, 80186, 80188	8087-2	Intel	
	x	x	x		AMD	High performance 80286 processor with memory management. Upward compatible with iAPX86, 88 software.	iAPX268/10	Intel	25
						Four 2901's and a 2902 Look-ahead Carry in one.	2901X4	IMI	
						Four 2901's and a 2902 Look-ahead Carry in one.	4X2901B	IMI	
x	x	x	x	x	Motorola	40 I/O lines, USART, 3 timers, 90% source-code compatible with 68000. Available in expanded, 68000 bus-compatible version. Also in CMOS.	**MK68200**	**Mostek (1650)**	
					Mitsubishi, NEC	Extended temperature range.	MK8086	Mostek	
x	x	x	x	x		On-board UART eight 16-bit Timer/Counters, PWM outputs, 3 input captures, Microwire/plus 52 I/O lines.	HPC16040	National	30
x	x	x		x	Fairchild	All features of NS10632 plus 8080 code software compatible. Available 3Q 1983.	NS16016	National	
x	x	x	x	x	Fairchild, TI	Full 32-bit internal architecture, 16-bit external data paths.	NS32016	National	
					Fairchild, TI	Slave processor, floating point unit, 32-bit and 64-bit operations, supports proposed IEEE standard.	NS32081	National	
					Fairchild, TI	Slave processor, demand paged virtual memory management, 32-entry associative cache.	NS32082	National	

Bold face indicates additional data is provided on the page noted.

MICROPROCESSORS (Cont'd)

General				Architecture									Hardware Support	
							(For Microcomputers Only)							
Data Word Size (bits)	Process Type	Supply Voltage (V)	No. of Pins	Instruction Word Size (bits)	Directly Addressable Memory (words)	No. of Basic Instructions	On-Chip RAM (bits)	On-Chip (P)ROM (bits)	DMA Capability	Maximum Clock Frequency (MHz)	Instruction Time Min/Max (µs)	No. of Interrupt Levels	Prototyping System	In-Circuit Emulator
16	CMOS	5	40	16	1M	101			x	10		3		x
16	CMOS	5	68	8-48	1M	101			x	8		8	x	x
16	NMOS	5	40	8-48	1M					5			x	x
16	NMOS	5	48	16	64M	110	x	x	x	4	1	3		x
16	NMOS	5	40	16	64K	110	x	x	x	4	1	3		x
16	NMOS	5	40	8-48	1M	133				5				
16	NMOS	5	40	8-48	1M	133				10	0.4/0.8		x	
16	NMOS	5	40	8-48	1M	133				8				
16	NMOS	5	40	8-48	1M	133				4				
16	HMOS	5		16-80	16M	56				10				
16	NMOS	5,12	64	16,32,48	65K	69				3.3	2/31	17	x	x
16	NMOS	5	64	16,32,48	65K	69				4.0	2	17	x	x
16	NMOS	5		16,32,48	256K	84	32x16	1Kx16		24	0.5/100	16	x	
16	NMOS	5	40	16,32,48	256K	96	32x16	1Kx16		24	0.5/100	16	x	
16	NMOS	5,12	40	16,32,48	16K	69				2.5	1	4	x	x
16	NMOS	5,12	40	16,32,48	16K	69				2.5	3.2/49.6		x	x
16	NMOS	5	40	16	32K	73	256x16			12	3.6	7	x	
16	CMOS	5	40	8-24	64K	256				10				
16	CMOS	5	40	8-24	16M	256				10				
16	NMOS	±5,12		16	64K					3		std.		x
16	NMOS	±5,12		16	65K					3.3		std.		x
16	NMOS	5	48	16-64	8M	110				4		5	x	x
16	NMOS	5	48	16-64	8M	110				6		5	x	x
16	NMOS	5	48	16-64	8M	110				10		5	x	x
16	NMOS	5	40	16-64	384K	110				4		5	x	x
16	NMOS	5	40	16-64	384K	110				6		5	x	x
16	NMOS	5	40	16-64	64K	110				10		5	x	x
16	NMOS	5	48	16-64	384K	110				10		5	x	x
16	NMOS	5	40	16-64	384K	110				10		5	x	x
16/32	CMOS	5	60	16, 32	4M	140			x	15		7	x	
16/32	NMOS	5	64	16-80	16M	56			x	10	0.2	7		
16/32	NMOS	5	64	16-80	16M	56			x	12	0.16	7		
16/32	NMOS	5	64	16-80	16M	56			x	6	0.4	7		
16/32	NMOS	5	64	16-80	16M	56			x	8	0.2	7		
16/32	NMOS	5	40		4M	140			x	7.5		4	x	
16/32	NMOS	5	48	8-200	16M	100				6	0.4	256	x	x
16/32		5	64	16,32,48,64,80	16M	56			x	4	0.4	7		
16/32	NMOS	5	48	16-80	1M	56				12	0.75/78	7	x	x
16/32	NMOS	5	64	16-80	16M	56				12	0.75/78	7	x	x
16/32	—	5	64	16-80	16M	56			x	4	0.4	7		

Software Support									
Cross Assembler	High Level Language	Programs							
		Debug	Diagnostic	Edit	Alternate Sources	Comments	Device	Source	Line
x	x	x	x	x	Zilog	High speed, CMOS 8086	µPD70116-10	NEC	
x	x	x	x	x	Zilog	High integration with several peripherals on chip. Upwards compatible with µPD70108, µPD70116.	µPD70216	NEC	
	x	x	x	x	Intel, Mostek, Siemens		µPD8086-2	NEC	
x	x	x		x	Zilog		LH8001	Sharp	5
x	x	x		x	Zilog		LH8002	Sharp	
					Intel, Mostek, NEC		SAB8086	Siemens	
					Intel, Mostek, NEC		SAB8086-1	Siemens	
					Intel, Mostek, NEC		SAB8086-2	Siemens	10
					Intel, Mostek, NEC		SAB8086-4	Siemens	
					Motorola, Hitachi, Mostek, Rockwell, Phillips	General purpose register machine, supports memory to memory operations.	**SCN68000**	**Signetics (1720)**	
x	x	x	x	x	AMI	Instructions include hardware multiply and divide software compatible with 990 minicomputers.	TMS9900	TI	
x	x	x	x	x		Same as TMS9900 except higher frequency version.	TMS9900-40	TI	
	x	x	x	x		Instruction set compatible with TMS9900.	TMS99105A	TI	15
	x	x	x	x		Single precision floating point arithmetic capability. 7 address modes.	TMS99110A	TI	
x	x	x	x	x	AMI, SMC	8 bit data bus, 16 bit internal operation, software compatible with TMS9900.	TMS9980A	TI	
x	x	x	x	x		Same as TMS9980, except has internal clock and requires only +5 and +12 power.	TMS9981	TI	
	x	x	x	x			TMS9995	TI	
							W65C802	WDC	20
						Software compatible with the 6500	W65C816	WDC	
		x		x			CP9008	Western	
				x			MP1600	Western	
x	x	x	x	x	AMD, SGS, Sharp	Segmented. 16 8-bit, 8 32-bit, 4 64-bit or 16 16-bit registers.	Z8001	Zilog	
x	x	x	x	x	AMD, SGS, Sharp	Segmented. 16 8-bit, 8 32-bit, 4 64-bit or 16 16-bit registers.	Z8001A	Zilog	25
x	x	x	x	x	AMD, SGS, Sharp	Segmented. 16 8-bit, 8 32-bit, 4 64-bit or 16 16-bit registers.	Z8001B	Zilog	
x	x	x	x	x	AMD, SGS, Sharp	Non-segmented. 16 8-bit, 8 32-bit, 4 64-bit or 16 16-bit registers.	Z8002	Zilog	
x	x	x	x	x	AMD, SGS, Sharp	Non-segmented. 16 8-bit, 8 32-bit, 4 64-bit or 16 16-bit registers.	Z8002A	Zilog	
x	x	x	x	x	AMD, SGS, Sharp	Non-segmented. 16 8-bit, 8 32-bit, 4 64-bit or 16 16-bit registers.	Z8002B	Zilog	
x	x	x	x	x	AMD, SGS, Sharp	Virtual memory, segmented addresses.	Z8003	Zilog	30
x	x	x	x	x	AMD, SGS, Sharp	Virtual memory, binary compatible with Z8001/Z8002, non-segmented.	Z8004	Zilog	
	x	x	x			PDP-11 Software compatible, floating point, 3-levels of memory protection in multi-user environments.	DCJ11-AA	DEC	
					Motorola, Mostek, Rockwell, Signetics	High Performance processor with seventeen general-purpose registers	HD68000-10	Hitachi	
					Motorola, Mostek, Rockwell, Signetics		HD68000-12	Hitachi	
					Motorola, Mostek, Rockwell, Signetics	High Performance processor with seventeen general-purpose registers	HD68000-6	Hitachi	35
					Motorola, Mostek, Rockwell, Signetics	High Performance processor with seventeen general-purpose registers	HD68000-8	Hitachi	
	x	x	x	x			DCT11-AA	DEC	
x	x	x	x	x	National	32 bit interval architecture, software multiply and divide.	F16032	Fairchild	
						MKB68000 available screened to MIL-STD883.	**MK68000**	**Mostek (1647)**	
x	x	x	x	x	Motorola	8 bit data bus version of 68000.	**MK68008**	**Mostek (1648)**	40
x	x	x	x	x	Motorola	Virtual memory 68000 processor	MK68010	Mostek	
						68000 screened to MIL-STD-883.	MKB68000	Mostek	

MICROPROCESSORS (Cont'd)

General				Architecture									Hardware Support	
							(For Microcomputers Only)							
Data Word Size (bits)	Process Type	Supply Voltage (V)	No. of Pins	Instruction Word Size (bits)	Directly Addressable Memory (words)	No. of Basic Instructions	On-Chip RAM (bits)	On-Chip (P)ROM (bits)	DMA Capability	Maximum Clock Frequency (MHz)	Instruction Time Min/Max (μs)	No. of Interrupt Levels	Prototyping System	In-Circuit Emulator
16/32	HMOS	5	64	16-80	16M	56			x	10	0.4	7	x	x
16/32	HMOS	5	64	16-80	16M	56			x	12.5	0.4	7	x	x
16/32	HMOS	5	64	16-80	16M	56			x	8	0.4	7	x	x
16/32	HMOS	5	64	16-80	16M	56			x	10	0.4	7	x	x
16/32	XMOS	5	48	8-200	16M	161			x	10	0.4	256	x	
16/32	XMOS	5	48	8-200	16M	161				4	0.4		x	
16/32	XMOS	5	48	8-200	16M	161			x	6	0.67	256	x	
32	CMOS	5	132	32	4Gb		64x32			18		16	x	x
32	CMOS	5	84	8	4G		0		x	20	0.05/2	1	x	
32	CMOS	5	84	8	4G		16K		x	20	0.05/2	1	x	
32	CMOS	5	84	16-32	256Mb	65			x	16		7	x	
32	XMOS	5	68	8-200	16M	133			x	10	0.3/	256	x	x
32	NMOS	5	40	32		53	17K			10	0.2			x
32	NMOS	5	48	8,16,24	16 M	128				10/15	0.3/27	64		x
32	NMOS	5	48	8,16,24	16 M	128				10/15	0.3/22	256		x
32	NMOS	5	68	8,16,24	4 G	128				10/15	0.3/19	256		x
32	NMOS	5	68	8,16,24	16 M	128				10/15	0.3/19	256		x
64	NMOS	5	24	24		16				10/15	2.4/23	64		

Software Support					Alternate Sources	Comments	Device	Source	Line
Cross Assembler	High Level Language	Programs							
		Debug	Diagnostic	Edit					
x	x	x	x	x	Hitachi, Mostek, Rockwell, Signetics	High performance processor with seventeen 32-bit general-purpose registers.	**MC68000L10**	**Motorola (1654)**	
x	x	x	x	x	Hitachi, Mostek, Rockwell, Signetics	High performance processor with seventeen 32-bit general-purpose registers.	**MC68000L12**	**Motorola (1654)**	
x	x	x	x	x	Hitachi, Mostek, Rockwell, Signetics	High performance processor with seventeen 32-bit general-purpose registers.	MC68000L8	Motorola	
x	x	x	x	x	Hitachi, Mostek, Rockwell, Signetics	Enhanced 68000 supporting true virtual memory with taster instruction set. Relocatable vector table to support multiple operating systems.	**MC68010**	**Motorola (1654,1905,2109)**	
x	x	x		x	Fairchild	32 bit internal architecture, software multiply and divide, BCD arithmetic. Hardware 32x32 bit multiply in gusec with NS16081 floating point unit. Supports demand-paged virtual memory and virtual machine capability with NS16082 memory management unit.	NS16032-10	National	
x	x	x		x	Fairchild		NS16032-4	National	
x	x	x		x	Fairchild	32 bit internal architecture, software multiply and divide, BCD arithmetic. Hardware 32x32 bit multiply in gusec with NS16081 floating point unit. Supports demand-paged virtual memory and virtual machine capability with NS16082 memory management unit.	NS16032-6	National	
	x	x	x	x		High-performance 32-bit CPU. Performs all system address generation, control, memory, access and processing functions. CMOS technology. 32-bit address and data buses are also provided.	**WE32100**	**AT&T (1602)**	
x	x	x	x	x		32-bit Transputer	IMST404	Inmos	
x	x	x	x	x		32-bit Transputer	**IMST414**	**Inmos (1636)**	
					Hitachi, Mostek, Signetics	MC68000, 68010 and 68008 are upward compatible with 68020. Separate 32-bit data and address bus. On-chip cache for speed enhancement and co-processor interface to extend CPU functions.	**MC68020**	**Motorola (1654,1905,2109,2110)**	
x	x	x	x	x	Fairchild, TI	Full 32-bit internal architecture, 32-bit external data paths.	NS32032	National	
x	x	x	x	x		Image Pipeline Processor	μPD7281	NEC	
x	x	x		x	National		T132008	TI	
x	x	x		x	National		T132016	TI	
x	x	x		x	National	In Design	T132032D	TI	
x	x	x		x	National		T132032T	TI	
					National	Floating Point Coprocessor	T132081	TI	

Bold face indicates additional data is provided on the page noted.

MICROPROCESSOR–System Components

This section presents the major microprocessor system devices organized into system groups, ie 6800, 8080, 68000, etc. It includes those RAM's, ROM's and PROM's which are unique to a system. It omits most general purpose memories as they are listed in the Memory section. Similarly, buffers, line drivers, transceivers, UART's, etc. are covered briefly here as they are presented in depth in the Digital and Interface sections.

Bit Slice

Macrologic Bipolar

Function	Device	Source	Line
Buffer (16x4 First-in first-out memory. See also Memory-FIFO's)			
	9403AC	Fairchild	
	9403AM	† Fairchild	
	N9403	Signetics	
CRC Generator/Checker (See also Interface-Error Checking Circuits)	9401C	Fairchild	5
	9401M	† Fairchild	
	N9401	Signetics	
	S9401	† Signetics	
Data Encryption, 4 Device Set			
	9414STC	Fairchild	
	9414STM	Fairchild	10

Macrologic CMOS

Function	Device	Source	Line
Arithmetic Logic Register Stack			
	F4705BC	Fairchild	
	F4705BM	† Fairchild	
Data Access Register (performs memory address arithmetic)	F4707BC	Fairchild	
	F4707BM	† Fairchild	
Data Path Switch (for closing data path loops around arithmetic/logic networks such as the F4705)			
	F4704BC	Fairchild	15
	F4704BM	† Fairchild	
Microprogram Sequencer			
	F4708C	Fairchild	
	F4708M	† Fairchild	
Parallel/Serial First-In First-Out Memory (FIFO) (See also Memory-FIFO's)			
	F4703BC	Fairchild	
	F4703BM	† Fairchild	20
Program Stack (16x4 LIFO Memory)			
	F4706BC	Fairchild	
	F4706BM	† Fairchild	
Programmable Bit Rate Generator (See also Digital-CMOS-Miscellaneous-Bit Rate Generator)			
	F4702BC	Fairchild	
	F4702BM	† Fairchild	
	HD4702-2	† **Harris** **(1624)**	25
RAM (16x4, clocked) Write-While-Read (See also Digital-CMOS-Memories)			
	F4710BC	Fairchild	
	F4710BM	† Fairchild	
RAM (16x4) (See also Memory-RAM's)			
	F4725BC	Fairchild	
	F4725BM	† Fairchild	
RAM (256x1) (See also Memory-RAM's)			
	F4720C	Fairchild	30
	F4720M	† Fairchild	
RAM (256x4) (See also Memory-RAM's)			
	F4726BC	Fairchild	
	F4726BM	† Fairchild	
ROM (256x8) (See also Memory-ROMS)			
	F4735BC	Fairchild	
	F4735BM	† Fairchild	35

2 Bit Slice

3000

Function	Device	Source	Line
Central Processing Element			
	N3002	Signetics	
	S3002	† Signetics	
Microprogram Control Unit			
	N3001	Signetics	
	S3001	† Signetics	

888

Function	Device	Source	Line
Memory Address Generator			
	SN74AS895	TI	40
Processor, 8-Bit Microcodeable			
	SN74AS887	TI	

4 Bit Slice

2900

Function	Device	Source	Line
Microprocessor, 4-Bit Slice, Cascadable			
	AM2901BC	AMD	
	AM2901BM	† AMD	
	AM2903AC	AMD	
	AM2903AM	† AMD	45
	AM2903C	AMD	
	AM2903M	† AMD	
	CA29C01	Calmos	
	CY2901BC	Cypress	
	CY2901BM	† Cypress	50
	CY2901CC	Cypress	
	CY2901CM	† Cypress	
	CY7C901-301C	Cypress	
	CY7C901-32M	† Cypress	
	GE29C01	**GE Semi** **(4628)**	55
	IDT39C01C	**IDT** **(1639)**	
	IDT39C03A	IDT	
	IDT39C203	IDT	
	209HCT01	MicroTech	
	IDM2901A-2	National	60
	IDM2901AC	National	
	IDM2901AM	† National	
	SFC-2901B	ThomsonCSF	
	SFC-2901C	ThomsonCSF	
	SFC-2903	ThomsonCSF	65
Bus Transceivers (See also Interface-Line Transceivers)			
	AM2905C	AMD	
	AM2905M	† AMD	
	AM2906C	AMD	
	AM2906M	† AMD	
	AM2907C	AMD	70
	AM2907M	† AMD	
	AM2912C	AMD	
	AM2915AC	AMD	
	AM2915AM	† AMD	
	AM2916AC	AMD	75
	AM2916AM	† AMD	
	AM2917AC	AMD	
	AM2917AM	† AMD	
	AM2927C	AMD	
	AM2928C	AMD	80
	AM2946C	AMD	
	AM2947C	AMD	
	AM2948C	AMD	
	AM2949C	AMD	
	SFC-2915A	ThomsonCSF	85
	SFC-2917	ThomsonCSF	
Clock Generator and Driver			
	AM2925C	AMD	
	AM2925M	† AMD	
Decoder/Demultiplexer			
	AM2924C	AMD	
	20HCT24	MicroTech	90
DMA Address Generator			
	AM2940C	AMD	
	AM2940M	† AMD	
DMA Address Generator/Programmable Timer/Counter			
	AM2942C	AMD	
	AM2942M	† AMD	
Dynamic Memory Controller			
	AM2964B	AMD	95
	AM2964BC	AMD	
	AM2964BM	† AMD	
	AM2968	AMD	
	MC54F2968	† Motorola	
	MC74F2968	Motorola	100
Error Correction and Detection Circuit, 16-Bit			
	AM2960C	AMD	
	AM2960M	† AMD	
	MC54F2960	**Motorola** **(1132)**	
	MC74F2960	**Motorola** **(1132)**	
Error Correction Multiple Bus Buffer, 4-Bit (datapath interface between AM2960, data bus, and RAM)			
	AM2904C	AMD	105
	AM2904M	† AMD	
	AM2961C	AMD	
	AM2961M	† AMD	
	AM2962C	AMD	
	MC54F2961	† Motorola	110
	MC54F2962	† Motorola	
	MC74F2961	Motorola	
	MC74F2962	Motorola	
Look-Ahead Carry Generator			
	AM2902AC	AMD	
	AM2902AM	† AMD	115
	IDT39C02A	**IDT** **(1641)**	
	29HCT02	MicroTech	
	IDM2902C	National	
	IDM2902M	† National	
	SFC-2902A	ThomsonCSF	120
Memory Timing Controller with EDAC			
	AM2969	† AMD	
	MC54F2969	† Motorola	
	MC74F2969	Motorola	
Memory Timing Controller without EDAC			
	AM2970	AMD	
	MC54F2970	† Motorola	125
	MC74F2970	Motorola	
Microprocessor, Four 2901's and a 2902 Look-Ahead Carry in one device			
	2901X4	IMI	
	4X2901B	IMI	
Microprocessor, 4-Bit Slice, Cascadable			
	CY7C901-88M	† Cypress	
Microprogram Sequencer, 4-Bit			
	AM2909AC	AMD	130
	AM2909C	AMD	
	AM2911A	AMD	
	CY2909AC	Cypress	
	CY2909AM	† Cypress	
	CY2909C	Cypress	135
	CY2909M	† Cypress	
	CY2911AC	Cypress	
	CY2911AM	† Cypress	
	CY2911C	Cypress	
	CY2911M	† Cypress	140
	CY7C909-30C	Cypress	
	CY7C909-30M	† Cypress	
	CY7C909-40C	Cypress	
	CY7C909-40M	† Cypress	
	CY7C911-30C	Cypress	145
	CY7C911-30M	† Cypress	
	CY7C911-40C	Cypress	
	CY7C911-40M	† Cypress	
	29HCT11	MicroTech	

(Continued)

† Military Temperature Range (−55° to 125°C)

* Typical Value

Bold face indicates additional data is provided on the page noted.

MICROPROCESSOR–System Components (Cont'd)

4 Bit Slice

2900 (Cont'd)

Function	Device	Source	Line
Microprogram Sequencer, 4-Bit (Cont'd)			
	IDM2909AC	National	
	IDM2909AM	† National	
	IDM2911AC	National	
	IDM2911AM	† National	
	SFC-2909	ThomsonCSF	5
	SFC-2909A	ThomsonCSF	
	SFC-2911	ThomsonCSF	
	SFC-2911A	ThomsonCSF	
Multiplier Accumulator, 12x12 bit			
	AM29509	AMD	
	AM29L509	AMD	10
Multiplier Accumulator, 16x16 bit			
	AM29510	AMD	
	AM29L510	AMD	
	CY7C510M	† Cypress	
	CY7C543C	Cypress	
	CY7C543M	† Cypress	15
Multiplier, 16x16 bit			
	AM29L516	AMD	
	AM29L517	AMD	
	CY7C516C	Cypress	
	CY7C516M	† Cypress	
	CY7C517C	Cypress	20
	CY7C517M	† Cypress	
Next Address Control Unit (use with 2911)			
	AM29811AC	AMD	
	AM29811AM	† AMD	
	IDM29811C	National	
	IDM29811M	† National	25
Priority Encoder			
	IDM29902C	National	
	IDM29902M	† National	
Priority Interrupt Encoder, Vectored			
	AM2914C	AMD	
	AM2914M	† AMD	
	SFC-2914	ThomsonCSF	30
Priority Interrupt Expander (for 2914)			
	AM2913C	AMD	
	AM2913M	† AMD	
Programmable Event Generator			
	AM2971C	AMD	
	AM2971M	† AMD	
RAM (16x4) Two Outputs Ports			
	AM29705C	AMD	35
	AM29705M	† AMD	
	AM29707	AMD	
	29HCT705	MicroTech	
	29HCT707	MicroTech	
	IDM29705AC	National	40
	IDM29705AM	† National	
Quad Bus Driver/Receiver			
	AM2926C	AMD	
	AM2929C	AMD	
	29HCT26	MicroTech	
	29HCT29	MicroTech	45
Quad D Flip-Flop with Two Output Ports			
	AM2919C	AMD	
	AM2919M	† AMD	
	SFC-2919	ThomsonCSF	
Quad D Register with Both Standard and Three-State Outputs (See also Digital-TTL-Flip-Flops)			
	AM2918C	AMD	
	AM2918M	† AMD	50
	SFC-2918	ThomsonCSF	
Quad-Gated Flip-Flop			
	IDM29908C	National	
	IDM29908M	† National	

Function	Device	Source	Line
Octal Buffer/Line Driver/Line Receiver			
	AM2958C	AMD	
	AM2959C	AMD	55
Octal D-Type Flip-Flip, Clear and Clock Enable, Three-State	AM2920C	AMD	
	AM2920M	† AMD	
Octal D-Type Flip-Flop, Three State			
	IDM29901C	National	
	IDM29901M	† National	
Octal Latch, Three State			
	AM2956C	AMD	60
	AM2957C	AMD	
Octal Memory Driver, Three-State			
	AM2965C	AMD	
	AM2965M	† AMD	
	AM2966C	AMD	
	AM2966M	† AMD	65
	54S730	† MMI	
	54S734	† MMI	
Octal Register, Three State			
	AM2954C	AMD	
	AM2955C	AMD	
One-of-Eight Decoder, with Polarity Control, Three-State			
	AM2921C	AMD	70
	AM2921M	† AMD	
	29HCT21	MicroTech	
6-Bit Comparator with 1 of 4 Chip Select			
	AM29806	AMD	
8-Bit Bidirectional I/O Port			
	AM2952C	AMD	
	AM2952M	† AMD	75
	AM2953C	AMD	
	AM2953M	† AMD	
	29F52C	**Fairchild (1024,5310)**	
	29F52M	**† Fairchild (1024,5310)**	
	29F53C	**Fairchild (1024,5310)**	80
	29F53M	**† Fairchild (1024,5310)**	
8-Bit Diagnostic Register with Serial Shadow Register			
	AM29818	AMD	
8-Bit Parallel I/O Port			
	AM2950C	AMD	
	AM2950M	† AMD	
	AM2951C	AMD	85
	AM2951M	† AMD	
8-Input Multiplexer, with Control Storage			
	AM2922C	AMD	
	AM2922M	AMD	
	AM2923C	AMD	
	29HCT22	MicroTech	90
9-Bit Equal to Comparator			
	AM29809	AMD	
16-Way Branch Control Unit (use with 2909)			
	AM29803AC	AMD	
	AM29803AM	† AMD	
	IDM29803C	National	
	IDM29803M	† National	95
64-Bit (16x4) Edge-Triggered Register, Three-State			
	IDM29903C	National	

10800

Function	Device	Source	Line
Arithmetic Logic Unit			
	MC10800	Motorola	
Bidirectional Translator with Latch			
	MC10804	Motorola	
	MC10805	Motorola	

Function	Device	Source	Line
ECL Transceiver with Latch			
	MC10807	Motorola	100
Memories (See Digital-ECL-Memories and Memory-PROMs/ROMs)			
Microprogram Control Function			
	MC10801	Motorola	
Multibit Shifter (16-Bit programmable shifter)			
	MC10808	Motorola	
Dual Address Register (32x9 stack)			
	MC10806	Motorola	

74S481/74LS481

Function	Device	Source	Line
Control Element (for next address generators)			
	SN74S482	TI	105
RAM(256x4), See 54S/74S208 series in PART NUMBER INDEX and also MEMORY-RAMs, Static			

8 Bit Slice

10900

Function	Device	Source	Line
ALU, 8-Bit Slice			
	MC10900	Motorola	
Microcode Sequencer			
	MC10904	Motorola	

888

Function	Device	Source	Line
Microprocessor, 8-Bit Slice			
	SN54AS888	**† TI (1260)**	
	SN74AS888	**TI (1260)**	110
Microsequencer			
	SN54AS890	**† TI (1276)**	
	SN74AS890	**TI (1276)**	

EPIC

Function	Device	Source	Line
Microprocessor, CMOS			
	GP001AD	RCA	
Address Select Unit			
	GP504AD	RCA	
Bus Interface	GP506AD	RCA	115
Emulating Controller			
	GP501AD	RCA	
General Processor Unit Controller			
	GP508AD	RCA	
Interrupt Control Unit			
	GP507AD	RCA	
Level Shifter	GP511AD	RCA	
Memory Controller			
	GP509AD	RCA	120
RAM (1024x4)	GP201AD	RCA	
Register Select Unit			
	GP505AD	RCA	
ROM (4096 bit)	GP301AD	RCA	
	GP302AD	RCA	
Shifter Function			
	GP510AD	RCA	125
8x8-Bit Multiplier			
	GP503AD	RCA	

1 Bit

14500

Function	Device	Source	Line
Microprocessor, Industrial Control Unit			
	MC14500B	Motorola	
Latch, 8-Bit	**MC14597BA**	**† Motorola (1126)**	
	MC14597BC	**Motorola (1126)**	
	MC14598BA	**† Motorola (1126)**	130
	MC14598BC	**Motorola (1126)**	

(Continued)

† Military Temperature Range (−55° to 125°C)

* Typical Value

Bold face indicates additional data is provided on the page noted.

MICROPROCESSOR–System Components (Cont'd)

1 Bit

14500 (Cont'd)

Function	Device	Source	Line
Latch, 8-Bit (Cont'd)	**MC14599BA**	**† Motorola (1126)**	
	MC14599BC	**Motorola (1126)**	

4 Bit

1400

Function	Device	Source	Line
Microcomputer	MN1400	Panasonic	
	MN1402	Panasonic	
	MN1403	Panasonic	5
	MN1404	Panasonic	
	MN1405	Panasonic	
	MN1430	Panasonic	
	MN1432	Panasonic	
	MN1435	Panasonic	10
Microcomputer, CMOS	MN1450	Panasonic	
	MN1453	Panasonic	
	MN1454	Panasonic	
	MN1455	Panasonic	
Microcomputer, Evaluator	MN1499	Panasonic	15
	MN1499A	Panasonic	
Microcomputer, External Memory	MN1498	Panasonic	

1500

Function	Device	Source	Line
Microcomputer	MN1541	Panasonic	
	MN1542	Panasonic	
	MN1544	Panasonic	20
	MN1562	Panasonic	
	MN1564	Panasonic	
Evaluator	MN1599	Panasonic	
I/O Expander	MN1591	Panasonic	

2100

Function	Device	Source	Line
Program Development Device	SE2100P	TI	25
	SE2130P	TI	
	SE2400P	TI	

6000

Function	Device	Source	Line
Microcomputer	SAA6000	ITT	

6400

Function	Device	Source	Line
Microcomputer	LM6402	Sanyo	
	LM6405	Sanyo	30

8840/50

Function	Device	Source	Line
Microcomputer, CMOS, Clock, RAM, ROM, I/O	MB8851	Fujitsu	
	MB8851A	Fujitsu	
	MB8851L	Fujitsu	
	MB8853	Fujitsu	
	MB8854A	Fujitsu	35
	MB8854L	Fujitsu	
	MB8855	Fujitsu	
	MB8857	Fujitsu	
	MB8858	Fujitsu	
Microcomputer, NMOS, Clock, RAM, ROM, I/O	MB8841	Fujitsu	40
	MB8842	Fujitsu	
	MB8843	Fujitsu	
	MB8844	Fujitsu	
	MB8845	Fujitsu	
	MB8846	Fujitsu	45

(Continued)

Function	Device	Source	Line
Microcomputer, NMOS, Clock, RAM, ROM, I/O (Cont'd)	MB8847	Fujitsu	
	MB8848	Fujitsu	
	MB8849	Fujitsu	

51000

Function	Device	Source	Line
Microcomputer, RAM, ROM, I/O	**KS51000**	**Samsung (4746)**	
	KS51200	Samsung	50
	KS52000	**Samsung (4746)**	

88200

Function	Device	Source	Line
Microcomputer, CMOS, Clock, RAM, ROM, I/O	MB88201	Fujitsu	
	MB88202	Fujitsu	

88400

Function	Device	Source	Line
Microcomputer, NMOS, Clock, RAM, ROM, I/O	MB88401	Fujitsu	
	MB88411	Fujitsu	55
	MB88413	Fujitsu	
	MB88421	Fujitsu	
	MB88423	Fujitsu	

88500

Function	Device	Source	Line
Microcomputer, CMOS, Clock, RAM, ROM, I/O	MB88501	Fujitsu	
	MB88503	Fujitsu	60
	MB88535	Fujitsu	
	MB88536	Fujitsu	
	MB88541	Fujitsu	

SM Series

Function	Device	Source	Line
Microcomputer	SM100	Sharp	
	SM111	Sharp	65
	SM114	Sharp	
	SM590	Sharp	
	SM591	Sharp	
Microcomputer, Expandable for External RAM	SM3A	Sharp	
Microcomputer, Expandable for External RAM/ROM	SM200	Sharp	70
	SM520	Sharp	
Microcomputer, Multi-LCD Display, On-Chip LCD Driver	SM510	Sharp	
Microcomputer, On-Chip A/D Converter	SM110	Sharp	
	SM573	Sharp	
Microcomputer, On-Chip LCD Driver	SM500	Sharp	75
	SM531	Sharp	
	SM540	Sharp	
	SM563	Sharp	
	SM5A	Sharp	
Microcomputer, On-Chip LCD Driver, Expandable for External RAM	SM4A	Sharp	80
Microcomputer, On-Chip Melody Generator and LCD Driver	SM511	Sharp	
	SM530	Sharp	
Microcomputer, Serial Input/Output	SM550	Sharp	
	SM551	Sharp	
	SM552	Sharp	85

μCOM-7

Function	Device	Source	Line
Microcomputer, General Purpose Driver	μPD7506	NEC	
	μPD7507	NEC	
	μPD7507S	NEC	
	μPD7508	NEC	
	μPD7508A	NEC	90
	μPD7508H	NEC	
	μPD7517	NEC	
	μPD7528	NEC	
	μPD7538	NEC	
Microcomputer, LCD Driver	μPD7501	NEC	95
	μPD7502	NEC	
	μPD7503	NEC	
	μPD7514	NEC	
Microcomputer, LED Driver	μPD7520	NEC	
Microcomputer, Vacuum Fluorescent Driver	μPD7508A	NEC	100
	μPD7517	NEC	
	μPD7519	NEC	
	μPD7528	NEC	
	μPD7537	NEC	
	μPD7538	NEC	105

μCOM-75

Function	Device	Source	Line
Microcomputer	μCOM-75	NEC	
	μPD7527	NEC	

COP400

Function	Device	Source	Line
Microprocessor, COP2440 without ROM	COP2404	National	
Microcontroller, CMOS, RAM, ROM, I/O	COP324C	National	
	COP325C	National	110
	COP344C	National	
	COP345C	National	
Microcontroller, Piggyback EPROM	COP2440R	National	
	COP2441R	National	
	COP402M	National	115
	COP420R	National	
	COP440R	National	
	COP444LR	National	
Microcontroller, Piggyback with EPROM Socket	COP2440R	National	
	COP420R	National	120
	COP440R	National	
	COP444LR	National	
Microcontroller, RAM, ROM, I/O	COP342	National	
Microcontroller, ROMless	COP402	National	
	COP404	National	125
Microcontroller, ROMless, Dual CPU	COP2304	National	
	COP2404	National	
Microcontroller (with ROM)	COP210C	† National	
	COP211C	† National	
	COP310C	National	130
	COP310L	National	
	COP311C	National	
	COP311L	National	
	COP320	National	
	COP320L	National	135
	COP321	National	
	COP321L	National	

(Continued)

† Military Temperature Range (−55° to 125°C)

* Typical Value

Bold face indicates additional data is provided on the page noted.

MICROPROCESSOR–System Components (Cont'd)

Function	Device	Source	Line
4 Bit			
COP400 (Cont'd)			
Microcontroller (with ROM) (Cont'd)			
	COP340	† National	
	COP341	† National	
	COP410C	National	
	COP410L	National	
	COP411C	National	5
	COP411L	National	
	COP420	National	
	COP420L	National	
	COP421	National	
	COP421L	National	10
	COP440	National	
	COP441	National	
	COP442	National	
	COP444L	National	
	COP445L	National	15
	ET9413	ThomsonCSF	
	ET9420	ThomsonCSF	
	ET9421	ThomsonCSF	
	ET9422	ThomsonCSF	
	ETC9410	ThomsonCSF	20
	ETC9411	ThomsonCSF	
	ETC9420	ThomsonCSF	
	ETC9421	ThomsonCSF	
	ETC9422	ThomsonCSF	
	ETC9444	ThomsonCSF	25
	ETC9445	ThomsonCSF	
	ETL9410	ThomsonCSF	
	ETL9411	ThomsonCSF	
	ETL9413	ThomsonCSF	
	ETL9420	ThomsonCSF	30
	ETL9421	ThomsonCSF	
	ETL9422	ThomsonCSF	
	ETL9444	ThomsonCSF	
	ETL9445	ThomsonCSF	
Microcontroller, Single-Chip, Dual CPU			
	COP2340	National	35
	COP2341	National	
	COP2342	National	
	COP2440	National	
	COP2441	National	
	COP2442	National	40
E² PROM 256-Bit Serial			
	COP494	National	
Frequency Generator/Counter Peripheral			
	COP452	National	
Liquid Crystal Display Controller			
	COP472	National	
RAM (4x64) and Timer			
	COP398	National	
	COP498	National	45
RAM (4x64) Serial (CMOS)			
	COP399	National	
	COP499	National	
Vacuum Fluorescent Display Driver			
	COP370	National	
	COP470	National	
8-Bit A/D Converter			
	COP430	National	50
	COP431	National	
	COP432	National	
	COP434	National	
	COP438	National	
HD4470			
Microcomputer, 4-Bit			
	HD44790	Hitachi	55

Function	Device	Source	Line
HMCS-40			
Microcomputer, 4-Bit			
	HMSC42C	Hitachi	
HMCS-400			
Microcomputer, RAM, ROM, I/O			
	HD614042	Hitachi	
	HMCS404C	Hitachi	
OLMS40			
Microcomputer (CMOS), I/O, Display Outputs, Timer			
	MSM58421	**OKI (4732)**	
	MSM58422	OKI	60
Microcomputer (CMOS), ROM, RAM, Timer/Counter, I/O			
	MSM5842	OKI	
	MSM5845	OKI	
Microprocessor, Real-Time Clock Calendar			
	MSM5832	OKI	
	MSM58321	**OKI (4732)**	
	L5832	SGS	65
Column Data Register for LCD			
	MSM5839	OKI	
Row Scanning Controller for LCD DOT Matrix Driver			
	MSM5838	OKI	
Serial to Parallel Converter and LED Driver			
	MSM58371	OKI	
Four Digit LED Driver			
	MSM58282	OKI	
Four Digit VF Driver			
	MSM58283	OKI	70
Five Digit LCD Driver			
	MSM58292	OKI	
Five Digit VF Driver			
	MSM58293	OKI	
SM-4			
Evaluation Device			
	LI3010	Sharp	
TLCS-43			
Microcomputer	TLCS-43	Toshiba	
TLCS-46			
Microcomputer	TLCS-46	Toshiba	75
TMS1000			
Microcomputer	TMS1000	TI	
	TMS1070	TI	
	TMS1100	TI	
	TMS1270	TI	
ROMless TMS1000 Family Evaluator and Program Development Device			
	SE1000C	TI	80
	SE1000P	TI	
	SE1004C	TI	
	SE1100C	TI	
	SE1400P	TI	
	SE2200P	TI	85
User Programmable Climate Controller			
	TMS2732	**TI (4214)**	
TMS2000			
ROMless TMS2000 Family Evaluator			
	SE2100P	TI	
	SE2130P	TI	
	SE2400P	TI	

Function	Device	Source	Line
8 Bit			
1600			
Cartridge ROM, 80K			
	R09580	GI	90
1650			
Microcomputer	PIC1652	GI	
	PIC1654	GI	
	PIC1655	GI	
	PIC1655A	GI	
	PIC1657	GI	95
	PIC1670	GI	
	PIC1672	GI	
	PIC16C58	GI	
Microcomputer with EEPROM			
	PIC16E53	GI	
	PIC16E57	GI	100
1800			
Note: 1800 series devices generally are available in 4-12 V and 4-6 V versions. Consult manufacturers for availability.			
Microcomputer, RAM, ROM, Counter/Timer			
	CDP1804AC	**† RCA (1673)**	
Microcomputer with Pascal Kernel in 2K ROM			
	CDP1804PC	**RCA (1673)**	
Microprocessor			
	HCMP1802A	Hughes	
	HCMP1802AC	Hughes	105
	HCMP1802BC	Hughes	
	HMMP1802A	† Hughes	
	HMMP1802AC	† Hughes	
	HMMP1802BC	† Hughes	
	CDP1802A	**† RCA (1673)**	110
	CDP1802AC	**† RCA (1673)**	
	CDP1802BC	**† RCA (1673)**	
Microprocessor, Counter/Timer			
	CDP1806AC	**† RCA (1673)**	
Microprocessor, RAM, Counter/Timer			
	CDP1805AC	**† RCA (1673)**	
Keyboard Encoder			
	CDP1871A	**RCA (1673,1679)**	115
	CDP1871AC	**RCA (1673,1679)**	
Latch/Decoder Memory Interface			
	CDP1866	**† RCA (1673,1676,1679)**	
	CDP1866C	**† RCA (1673,1676,1679)**	
	CDP1867	**† RCA (1673,1676,1679)**	
	CDP1867C	**† RCA (1673,1676,1679)**	120
	CDP1868	**† RCA (1673,1676,1679)**	
	CDP1868C	**† RCA (1673,1676,1679)**	
	CDP1881	**RCA (1673,1676,1679)**	
	CDP1881C	**RCA (1673,1676,1679)**	
	CDP1882	**RCA (1673,1676,1679)**	125
	CDP1882C	**RCA (1673,1676,1679)**	
	CDP1883	**RCA (1673,1676,1679)**	
Multiply-Divide Circuit			
	HCMP1855	Hughes	
	HCMP1855C	Hughes	
	HMMP1855	† Hughes	130

(Continued)

† Military Temperature Range (−55° to 125°C)

* Typical Value

Bold face indicates additional data is provided on the page noted.

MICROPROCESSOR–System Components (Cont'd)

8 Bit

1800 (Cont'd)

Function	Device	Source	Line
Multiply-Divide Circuit (Cont'd)	HMMP1855C	† Hughes	
	CDP1855	† **RCA (1673,1679)**	
	CDP1855C	† **RCA (1673,1679)**	
N-Bit Decoder (for I/O interface)	HCMP1853	Hughes	
	HCMP1853C	Hughes	5
	HMMP1853	† Hughes	
	HMMP1853C	† Hughes	
	CDP1853	† **RCA (1673,1679)**	
	CDP1853C	† **RCA (1673,1679)**	
Programmable I/O Interface	HMMP1851	† Hughes	10
	HMMP1851C	† Hughes	
	CDP1851	† **RCA (1673,1679)**	
	CDP1851C	† **RCA (1673,1679)**	
Programmable Interrupt Controller	**CDP1877**	**RCA (1673,1679)**	
	CDP1877C	**RCA (1673,1679)**	15
Programmable Tone Generator, 8-Bit	**CDP1863**	† **RCA (1673,1679)**	
	CDP1863C	† **RCA (1673,1679)**	
RAM (32x8) (See also Memory-RAM's)	HCMP1824	Hughes	
	HCMP1824C	Hughes	
	HMMP1824	† Hughes	20
	HMMP1824C	† Hughes	
	CDP1824	† **RCA (1673,1676)**	
	CDP1824C	† **RCA (1673,1676)**	
RAM (64x8) (See also Memory-RAM's)	**CDP1826C**	**RCA (1673,1676)**	
RAM (128x8) (See also Memory-RAM's)	**CDP1823**	† **RCA (1673,1676)**	25
	CDP1823C	† **RCA (1673,1676)**	
RAM (256x4) (See also Memory-RAM's)	HCMP1822C	Hughes	
	HMMP1822C	† Hughes	
	CDP1822	† **RCA (1673,1676)**	
	CDP1822C	† **RCA (1673,1676)**	30
RAM (1024x1) (See also Memory-RAM's)	CDP1821	† RCA	
	CDP1821C	† RCA	
Real-Time Clock (time and calendar information in BCD format from seconds to months)	**CDP1879**	† **RCA (1673,1679)**	
	CDP1879C-1	† **RCA (1673,1679)**	
ROM (512x8) (See also Memory-ROM's)	HCMP1831	Hughes	35
	HCMP1831C	Hughes	
	HCMP1832	Hughes	
	HCMP1832C	Hughes	
	HMMP1831	† Hughes	
	HMMP1831C	† Hughes	40
	HMMP1832	† Hughes	
	HMMP1832C	† Hughes	
	CDP1831	† **RCA (1673,1677)**	
	CDP1831C	† **RCA (1673,1677)**	
	CDP1832	† **RCA (1673,1677)**	45
	CDP1832C	† **RCA (1673,1677)**	
ROM (1024x8) (See also Memory-ROM's)	HCMP1833	Hughes	
	HCMP1833C	Hughes	
	HCMP1834	Hughes	
	HCMP1834C	Hughes	50
	HMMP1833	† Hughes	
	HMMP1833C	† Hughes	
	HMMP1834	† Hughes	
	HMMP1834C	† Hughes	
		(Continued)	

Function	Device	Source	Line
ROM (1024x8) (See also Memory-ROM's) (Cont'd)	**CDP1833**	† **RCA (1673,1677,1678)**	55
	CDP1833C	† **RCA (1673,1677,1678)**	
	CDP1834	† **RCA (1673,1677)**	
	CDP1834C	† **RCA (1673,1677)**	
ROM (2048x8) (See also memory-ROMs)	HCMP1835	Hughes	
	HCMP1835C	Hughes	60
	HMMP1835	† Hughes	
	HMMP1835C	† Hughes	
	HMMP1836	† Hughes	
	HMMP1836C	† Hughes	
	CDP1835C	† **RCA (1673,1677)**	65
	CDP1837C	† **RCA (1673,1677)**	
UART	HCMP1854A	Hughes	
	HCMP1854AC	Hughes	
	HMMP1854A	† Hughes	
	HMMP1854AC	† Hughes	70
	CDP1854A	† **RCA (1673,1679)**	
	CDP1854AC	† **RCA (1673,1679)**	
	CDP65C51-1	**RCA (1673,1679)**	
	CDP6853	**RCA (1673,1679)**	
Video Display Controller	HMMP1861	† Hughes	75
	HMMP1861C	† Hughes	
Video Interface System (1869 is an address and sound generator	**CDP1869C**	† **RCA (1673,1679)**	
	CDP1870C	† **RCA (1673,1679)**	
	CDP1876C	† **RCA (1673,1679)**	
Dual Counter/Timer (two 16-bit programmable down counters independently controlled by separate control registers)	CD1878	† RCA	80
	CDP1878C	† **RCA (1673,1679)**	
1 of 8 Binary Decoder	**CDP1873C**	† **RCA (1673,1679)**	
4-Bit Buffer/Separator (for memory interface)	HCMP1856	Hughes	
	HCMP1856C	Hughes	
	HMMP1856	† Hughes	85
	HMMP1856C	† Hughes	
	CDP1856	† **RCA (1673,1679)**	
	CDP1856C	† **RCA (1673,1679)**	
4-Bit Bus Buffer/Separator (for I/O interface)	HCMP1857	Hughes	
	HCMP1857C	Hughes	90
	HMMP1857	† Hughes	
	HMMP1857C	† Hughes	
	CDP1857	† **RCA (1673,1679)**	
	CDP1857C	† **RCA (1673,1679)**	
4-Bit Latch with Dual 1 of 4 Decoders	HCMP1858	Hughes	95
	HCMP1858C	Hughes	
	HMMP1858	† Hughes	
	HMMP1858C	† Hughes	
	CDP1858	† **RCA (1673,1676,1679)**	
	CDP1858C	† **RCA (1673,1676,1679)**	100
4-Bit Latch with 1 of 4 Decoder	HCMP1859	Hughes	
	HCMP1859C	Hughes	
	HMMP1859	† Hughes	
	HMMP1859C	† Hughes	
	CDP1859	† **RCA (1673,1676,1679)**	105
	CDP1859C	† **RCA (1673,1676,1679)**	

Function	Device	Source	Line
6-Bit Latch with 1 of 4 Decoder	**CDP1882**	**RCA (1673,1676,1679)**	
	CDP1882C	**RCA (1673,1676,1679)**	
	CDP1883	**RCA (1673,1676,1679)**	
7-Bit Latch with Decoder for 8Kx8 Memories	**CDP1883C**	**RCA (1673,1676,1679)**	110
8-Bit Input/Output Port	HCMP1852	Hughes	
	HCMP1852C	Hughes	
	HMMP1852	† Hughes	
	HMMP1852C	† Hughes	
	CDP1852	† **RCA (1673,1679)**	115
	CDP1872C	† **RCA (1673,1679)**	
	CDP1874C	† **RCA (1673,1679)**	
	CDP1875C	† **RCA (1673,1678,1679)**	
2650			
Microprocessor	SCN2650A	Signetics	
Advanced Video Display Controller	**MC2674**	**Motorola (1661)**	120
	SCN2674	**Signetics (1704)**	
Asynchronous Communications Interface	**SCN2641**	**Signetics (1682)**	
Display Character and Graphics Generator	SC2670AC3	Signetics	
	SC2670BC3	Signetics	
Multi-Protocol Communications Circuit (includes SDLC, BiSync)	**SCN2652A**	**Signetics (1686)**	125
Polynomial Generator/Checker	**SCN2653A**	**Signetics (1688)**	
Programmable Communication Interface	**SCN2651C**	**Signetics (1684)**	
	SCN2661A	**Signetics (1690)**	
	SCN2661B	**Signetics (1690)**	
	SCN2661C	**Signetics (1690)**	130
	COM2449	SMC	
	COM2651	SMC	
	COM2661	SMC	
Programmable Keyboard and Communications Controller	SCN2671A	Signetics	
Programmable Video Timing Controller	**SCN2672A**	**Signetics (1700)**	135
Video Attributes Controller	**SCB2673A**	**Signetics (1702)**	
	SCB2673B	**Signetics (1702)**	
Dual Universal Asynchronous Receiver/Transmitter	**SCN2681**	**Signetics (1692)**	
Quad Transceivers (See also Interface-Line Transceivers)	**MC8T26A**	**Motorola (3210)**	
	MC8T28	**Motorola (3210)**	140
	DS8T26A	National	
	DS8T28	National	
Hex Buffers/Inverters (See also Digital-TTL-Buffers/Inverters 8T95, 8T96, 8T97, 8T98)	**MC8T95**	**Motorola (3209)**	
	MC8T96	**Motorola (3209)**	
	MC8T97	**Motorola (3209)**	145
	MC8T98	**Motorola (3209)**	
	N8T95	**Signetics (1175)**	
	N8T96	**Signetics (1175)**	
	N8T97	**Signetics (1175)**	
	N8T98	**Signetics (1175)**	150
	S8T95	† Signetics	
	S8T97	† Signetics	
	S8T98	† Signetics	

† Military Temperature Range (−55° to 125°C)

* Typical Value

Bold face indicates additional data is provided on the page noted.

MICROPROCESSOR–System Components (Cont'd)

Function	Device	Source	Line
8 Bit			
3870			
Microcomputer, EPROM, 64-Byte Scratchpad RAM, Timer, I/O	XR38E70	Exar	
Microcomputer, Piggyback EPROM	XR38P70	Exar	
	MK38P70	Mostek	
Microcomputer, Piggyback EPROM, Emulates all MK3870 Devices	MK38P70/02	Mostek	
Microcomputer, ROM, 64-Byte Executable RAM, 64-Byte Scratchpad RAM, Timer I/O	XR3872	Exar	5
	F3872	Fairchild	
	F38L72	Fairchild	
	MK3870/12	Mostek	
	MK3870/22	Mostek	
	MK3870/32	Mostek	10
	MK3870/42	Mostek	
	MC3870	Motorola	
	M3872	SGS	
	M38SH72	SGS	
Microcomputer, ROM, 64-Byte Scratchpad RAM, Timer, I/O	XR3870	Exar	15
	XR38E70	Exar	
	MK3870/10	Mostek	
	MK3870/20	Mostek	
	MK3870/30	Mostek	
	MK3870/40	Mostek	20
	M3870	SGS	
	U2870	Telefunken	
	U3870	Telefunken	
Microcomputer, 28-pin version of 3870	MK2870	Mostek	
Programmable CRT Video Control Unit	MK3807	Mostek	25
6500			
Note: The 6500 series is bus compatible with 6800 series devices			
Microcomputer	**NCR6500/1**	**NCR (1671)**	
	R6500/1-10	Rockwell	
	W65C101	WDC	
Microprocessor	**G65SC02**	**GTEMicro (1615)**	30
	G65SC03	**GTEMicro (1615)**	
	G65SC04	**GTEMicro (1615)**	
	G65SC05	**GTEMicro (1615)**	
	G65SC06	**GTEMicro (1615)**	
	G65SC07	**GTEMicro (1615)**	35
	G65SC102	**GTEMicro (1615)**	
	G65SC103	**GTEMicro (1615)**	
	G65SC104	**GTEMicro (1615)**	
	G65SC105	**GTEMicro (1615)**	
	G65SC106	**GTEMicro (1615)**	40
	G65SC107	**GTEMicro (1615)**	
	G65SC112	**GTEMicro (1615)**	
	G65SC115	**GTEMicro (1615)**	
	G65SC12	**GTEMicro (1615)**	
	G65SC13	**GTEMicro (1615)**	45
	G65SC14	**GTEMicro (1615)**	
	G65SC15	**GTEMicro (1615)**	
	NCR65C00/1	**NCR (1671)**	
	NCR65C00/2	**NCR (1671)**	
	NCR65C00/3	**NCR (1671)**	50
	NCR65C02	**NCR (1671)**	
	NCR65CX02	**NCR (1671,4722,4727)**	
	NCRCX02	NCR	
	RP65C02	**Panatech (4133)**	
	RP65C02A	**Panatech (4133)**	55
		(Continued)	

Function	Device	Source	Line
Microprocessor (Cont'd)	R6500	Rockwell	
	R6501Q	Rockwell	
	R6502	Rockwell	
	R6503	Rockwell	
	R6504	Rockwell	60
	R6505	Rockwell	
	R6506	Rockwell	
	R6507	Rockwell	
	R6511Q	Rockwell	
	R6512	Rockwell	65
	R6513	Rockwell	
	R6514	Rockwell	
	R6515	Rockwell	
	L6506	SGS	
	VL65C02	**VTI (1751,1752,1753)**	70
	VL65NC02	**VTI (1751,1752,1753)**	
	W65C01	WDC	
	W65C02	WDC	
	W65SC02	WDC	
	W65SC03	WDC	75
	W65SC04	WDC	
	W65SC05	WDC	
	W65SC06	WDC	
	W65SC07	WDC	
	W65SC102	WDC	80
	W65SC103	WDC	
	W65SC104	WDC	
	W65SC105	WDC	
	W65SC106	WDC	
	W65SC107	WDC	85
	W65SC112	WDC	
	W65SC115	WDC	
	W65SC12	WDC	
	W65SC13	WDC	
	W65SC14	WDC	90
	W65SC15	WDC	
Microprocessor, Communications	**G65SC150**	**GTEMicro (1616)**	
	G65SC151	GTEMicro	
Microprocessor, Clock, RAM, IO	**NCR6500/11**	**NCR (1671)**	
	R6500/11	Rockwell	95
	R6500/12	Rockwell	
	R6500/13	Rockwell	
	R6500/15	Rockwell	
	R6500/16	Rockwell	
Analog Input, Multiplexer, A/D Converter	**MP21**	**Burr-Brown (3148)**	100
Asynchronous Communications Interface Adapter	G65SC51	GTEMicro	
	MD65SC51	Mitel	
	R6551	Rockwell	
	R65C51	Rockwell	
	UM6551	UMC	105
	UM6551A	UMC	
	VL6551	**VTI (1751,1752,1764)**	
	VL65C51	**VTI (1751,1752,1764)**	
	W65C51	WDC	
CRT Controller	R6545-1	Rockwell	110
Dot-Matrix Printer Controller	R6592	Rockwell	
Emulator Device	R6500/1E	Rockwell	
Microcomputer, Dual	R65C00/21	Rockwell	

Function	Device	Source	Line
Microprocessor, Dual	R65C29	Rockwell	
Mini-Floppy Disk Controller	**MB8876A**	**Fujitsu (1611)**	115
	MB8877A	**Fujitsu (1611)**	
Peripheral Interface Adapter	G65SC21	GTEMicro	
	G65SC22	GTEMicro	
	MD65SC22	Mitel	
	NCR65C21	**NCR (1671)**	120
	NCR65C22	**NCR (1671)**	
	R6520	Rockwell	
	R6522	Rockwell	
	R65C22	Rockwell	
	VL6522	**VTI (1751,1752,1762)**	125
	VL65C21	VTI	
	VL65C22	**VTI (1751,1752,1762)**	
	W65C21	WDC	
	W65C22	WDC	
	W65C29	WDC	130
	W65C90	WDC	
Peripheral Interface Adapter/Timer	R65C24	Rockwell	
	VL65C24	VTI	
RAM, ROM, I/O and Interval Timer	R6530	Rockwell	
RAM(128x8), I/O, and Timer	G65SC32	GTEMicro	135
	R6532	Rockwell	
	UM6532	UMC	
	UM6532A	UMC	
	W65C32	WDC	
RAM(128x8), ROM, I/O, and Counter/Timer	R6531	Rockwell	140
ROM(2048x8) (See Memory-ROM's)			
6800			
Microcomputer	S6801	GouldAMI	
	S6805	GouldAMI	
	MC6801	**Motorola (1664,1905)**	
	MC6801-1	**Motorola (1664,1905)**	145
	MC6801C	**Motorola (1664,1905)**	
	MC6801U4	**Motorola (1666)**	
	MC6801U4-1	**Motorola (1666)**	
	MC6803U4-1	**Motorola (1666)**	
	MC68A01	Motorola	150
	MC68B01	Motorola	
	EF6801	ThomsonCSF	
	EF6805P2	ThomsonCSF	
	EF6805P4	ThomsonCSF	
	EF6805P6	ThomsonCSF	155
	EF6805U2	ThomsonCSF	
Microcomputer (external ROM)	**MC6803U4**	**Motorola (1666)**	
	EF68A03	ThomsonCSF	
	EF68B03	ThomsonCSF	
	EF68HC05E9	ThomsonCSF	160
Microcomputer, RAM, ROM, I/O	MC6805P2	Motorola	
	MC6805P4	Motorola	
	MC6805P6	Motorola	
	MC6805U2	Motorola	
Microcomputer, A/D Converter, Serial Peripheral Interface, Three Timers	MC6805S2	Motorola	165
	MC6805S3	Motorola	

† Military Temperature Range (−55° to 125°C)

* Typical Value

Bold face indicates additional data is provided on the page noted.

MICROPROCESSOR–System Components (Cont'd)

8 Bit

6800 (Cont'd)

Function	Device	Source	Line
Microcomputer, Clock, ROM, EEPROM, RAM, I/O, Timers, Programmable Prescaler, Serial Interface			
	MC6805K2	Motorola	
	MC6805K3	Motorola	
Microcomputer, Clock, Timer, RAM, ROM, I/O			
	MC6804J1	Motorola	
	MC6804J2	Motorola	
	MC6804P2	Motorola	5
	EF6804J2	ThomsonCSF	
	EF6804P2	ThomsonCSF	
	EF68HC04P3	ThomsonCSF	
Microcomputer, Clock, Timer, RAM, ROM, PLL, I/O			
	MC6805T2	Motorola	
	EF6805T2	ThomsonCSF	10
Microcomputer (CMOS), EPROM, RAM, Timer, I/O			
	MC1468705G2	**Motorola (1668)**	
Microcomputer (CMOS), RAM, ROM, Clock, Timer, I/O			
	MC146805F2	Motorola	
Microcomputer (CMOS), RAM, ROM, Timer, I/O			
	MC146805G2	Motorola	
	MC68HC04P2	Motorola	
	MC68HC04P3	Motorola	15
	CDP6805F2	**RCA (1673)**	
	CDP6805G2	**RCA (1673)**	
Microcomputer (CMOS), RAM, Timer, I/O			
	HD6303R	Hitachi	
	HD63A03R	Hitachi	
	HD63B03R	Hitachi	20
	CDP6805E2	**RCA (1673)**	
Microcomputer (EPROM)			
	MC1468705F2	**Motorola (1668)**	
	MC68701	**Motorola (1666)**	
	MC68701-1	**Motorola (1666)**	
	MC68701C	**Motorola (1666)**	25
	MC68701C-1	**Motorola (1666)**	
	MC68701U4	**Motorola (1666)**	
	MC68701U5	Motorola	
	MC68704P2	**Motorola (1669)**	
	MC68705P3	Motorola	30
	MC68705P5	Motorola	
	MC68705R3	Motorola	
	MC68705R5	Motorola	
	MC68705U3	Motorola	
	MC68705U5	Motorola	35
Microcomputer, (EPROM), ROM, Clock, Timer, A/D, I/O			
	MC68705R3	Motorola	
Microcomputer (external ROM)			
	S6803	GouldAMI	
	S6803N/R	GouldAMI	
	MC6803	**Motorola (1666)**	
	MC6803-1	**Motorola (1666)**	40
	MC6803C	**Motorola (1666)**	
	MC6803E	**Motorola (1666)**	
	MC68A03	Motorola	
	MC68B03	Motorola	
	EF6803	ThomsonCSF	45
Microcomputer, RAM, ROM, Clock, Timer, A/D, I/O			
	MC6805R2	Motorola	
Microcomputer, RAM, ROM, I/O			
	MC6805U3	Motorola	
	EF6805U3	ThomsonCSF	
Microcomputer, RAM, ROM, I/O, A/D			
	MC6805R3	Motorola	
Microcomputer, RAM, ROM, I/O, 2 Serial Interfaces, Timer			
	MC68HC05C4	**Motorola (1668)**	50
	MC68HC05C8	Motorola	
	CDP68HC05C4	**RCA (1673)**	
	CDP68HC05D2	**RCA (1673)**	

Function	Device	Source	Line
Microcomputer, RAM, ROM, Timer, I/O			
	MC6805H2	Motorola	
Microcomputer, RAM, Timer, I/O			
	MC146805E3	Motorola	55
Microcomputer, ROM, EEPROM, RAM, 16-Bit Timer, 8-Bit Pulse Accumulator, Serial Interface			
	MC68HC11A8	Motorola	
Microprocessor			
	S6800	GouldAMI	
	S68A00	GouldAMI	
	S68B00	GouldAMI	
	HD68A00	Hitachi	60
	HD68B00	Hitachi	
	MC6800	**Motorola (1660)**	
	MC68A00	Motorola	
	MC68B00	Motorola	
	EF6800	ThomsonCSF	65
	EF6805R2	ThomsonCSF	
	EF68A00	ThomsonCSF	
	EF68B00	ThomsonCSF	
Microprocessor (CMOS), RAM, Timer, I/O			
	MC146805E2	Motorola	
	CDP6805E3	**RCA (1673)**	70
Microprocessor (external clock)			
	S6809(E)	GouldAMI	
	S68A09(E)	GouldAMI	
	S68B09(E)	GouldAMI	
	HD6309E	Hitachi	
	MC6809E	**Motorola (1660,1905)**	75
	MC68A09E	Motorola	
	MC68B09E	Motorola	
	EF6809E	ThomsonCSF	
	EF68A09E	ThomsonCSF	
	EF68B09E	ThomsonCSF	80
Microprocessor (external clock, 192 x 8 RAM)			
	HD6303X	Hitachi	
	HD63A03X	Hitachi	
	HD63B03X	Hitachi	
Microprocessor (internal clock)			
	S6809	GouldAMI	
	S68A09	GouldAMI	85
	S68B09	GouldAMI	
	HD6809	Hitachi	
	HD68A09	Hitachi	
	HD68B09	Hitachi	
	MC6809	**Motorola (1660,1905)**	90
	MC68A09	Motorola	
	MC68B09	Motorola	
	EF6809	ThomsonCSF	
	EF68A09	ThomsonCSF	
	EF68B09	ThomsonCSF	95
Microprocessor (internal clock, 128x8 RAM)			
	S6802	GouldAMI	
	S68A02	GouldAMI	
	S68B02	GouldAMI	
	HD6303	Hitachi	
	MC6802	**Motorola (1660)**	100
	MC6802NS	**Motorola (1660)**	
	MC68A02	Motorola	
	MC68B02	Motorola	
	EF6802	ThomsonCSF	
	EF68A02	ThomsonCSF	105
	EF68B02	ThomsonCSF	
Microprocessor (6800 plus internal clock)			
	HD6808	Hitachi	
	MC6808	**Motorola (1660)**	
	MC68A08	Motorola	
	MC68B08	Motorola	110
	EF6808	ThomsonCSF	
		(Continued)	

Function	Device	Source	Line
Microprocessor (6800 plus internal clock) (Cont'd)			
	EF68A08	ThomsonCSF	
	EF68B08	ThomsonCSF	
Advanced Data Link Controller			
	S6854	GouldAMI	
	S68A54	GouldAMI	115
	S68B54	GouldAMI	
	MC6854	**Motorola (1663)**	
	MC68A54	Motorola	
	MC68B54	Motorola	
	EF6854	ThomsonCSF	120
	EF68A54	ThomsonCSF	
	EF68B54	ThomsonCSF	
Asynchronous Communications Interface Adapter (ACIA)			
	S6850	GouldAMI	
	S68A50	GouldAMI	
	S68B50	GouldAMI	125
	HD6350	Hitachi	
	HD63A50	Hitachi	
	HD63B50	Hitachi	
	HD6850	Hitachi	
	HD68A50	Hitachi	130
	MC6850	**Motorola (1663)**	
	MC68A50	Motorola	
	MC68B50	Motorola	
	MC68HC51	**Motorola (1663)**	
	MC68HC53	**Motorola (1663)**	135
	EF68A50	ThomsonCSF	
	EF68B50	ThomsonCSF	
	EF6850	ThomsonCSF	
Bus Monitor	MD68SC49	Mitel	
	MD68SC49B	Mitel	140
Bus Transceiver, (The 6880 is also called 8T26 and the 6889 the 8T28, See Interface-Transceivers)			
	MC6880A	**Motorola (3210)**	
	MC6889	**Motorola (3210)**	
Clock Buffer	MPQ6842	Motorola	
Clock Generator, 2 Phase			
	MC6875	Motorola	
	MC6875A	Motorola	145
Clock (real time) Plus RAM			
	MC146818	**Motorola (1663)**	
	MC146818A	**Motorola (1663)**	
	CDP6818	**RCA (1673,1679)**	
Clock, 2 Phase (MC6870/71 from Motorola Component Products Dept., Franklin Park, IL)			
	MC6870	Motorola	
	MC6871	Motorola	150
CRT Controller	S68045	GouldAMI	
	S68A045	GouldAMI	
	S68B045	GouldAMI	
	HD6845	Hitachi	
	HD68A45	Hitachi	155
	HD68B45	Hitachi	
	MC6835	Motorola	
	MC6845R1	Motorola	
	MC68A35	Motorola	
	MC68A45	Motorola	160
	MC68B35	Motorola	
	MC68B45	Motorola	
	UM6845	UMC	
	UM6845A	UMC	
	UM6845B	UMC	165
	UM6845E	UMC	
	UM6845EA	UMC	
	UM6845EB	UMC	
	UM6845R	UMC	
	UM6845RA	UMC	170
	UM6845RB	UMC	

† Military Temperature Range (−55° to 125°C)

* Typical Value

Bold face indicates additional data is provided on the page noted.

MICROPROCESSOR–System Components (Cont'd)

8 Bit

6800 (Cont'd)

Function	Device	Source
CRT Controller, Character and Screen Programmable, Cursor, Light Pen Detection	**MB89321**	**Fujitsu (1611)**
D/A Converter	**MC6890**	**Motorola (3630)**
	MC6890A	**† Motorola (3630)**
Data Security Device (data encryption standard)	MC6859	Motorola
Digital Modulator (for differential phase shift keying system)	MC6862	Motorola
Digital Time/Space Crosspoint Switch	MT8981	Mitel
DMA Controller	HD6844	Hitachi
	HD68A44	Hitachi
	HD68B44	Hitachi
	MC6844	**Motorola (1662)**
	MC6844M	**† Motorola (1662)**
	MC68A44	Motorola
	MC68B44	Motorola
DMA Processor (serial)	MC6855	Motorola
Erasable PROM (1024x8) See Memory-PROMs, 1024x8		
Floating Point ROM (for MC6809)	**MC6839**	**Motorola (1662)**
	MC68A39	Motorola
	MC68B39	Motorola
Floppy Disc Controller	HD6843	Hitachi
	HD68A43	Hitachi
	MC6843	Motorola
	FD1793-02	Western
	FD1797-02	Western
General Purpose Interface Adapter (IEEE 488 bus)	MC68A488	Motorola
	MC68B488	Motorola
	HEF4738	Signetics
High-Speed Universal Byte-Synchronous Data Switch	MD68SC84	Mitel
Industrial Interface Adaptor	**MC6822**	**Motorola (1663)**
Memory Address Multiplexer for 16K RAMs	MC3442A	Motorola
Memory Controller for 4K to 64K Dynamic RAMs	MC3480	Motorola
Memory Management Unit	C68A29	Motorola
	MC6829	**Motorola (1662)**
	MC68B29	Motorola
Microcomputer	MC68HC01	Motorola
	MC68HC03	Motorola
Microcomputer (external ROM)	EF6803U4	ThomsonCSF
Modem	**MC6860**	**Motorola (1663,3633)**
	MC6860L	**Motorola (1663,3633)**
Note: The 6800 series is bus compatible with 6500 series devices.		
Parallel Interface	**CDP6823**	**RCA (1673,1679)**
Peripheral Interface Adapter, (PIA)	S6821	GouldAMI
	S68A21	GouldAMI
	S68B21	GouldAMI
	HD6321	Hitachi
	HD63A21	Hitachi
	HD63B21	Hitachi
		(Continued)
Peripheral Interface Adapter, (PIA) (Cont'd)	HD6821	Hitachi
	HD68A21	Hitachi
	HD68B21	Hitachi
	MD68SC21	Mitel
	MC146823	**Motorola (1663)**
	MC6821	**Motorola (1663)**
	MC68A21	Motorola
	MC68B21	Motorola
	MC68HC21	Motorola
	EF6821	ThomsonCSF
	EF68A21	ThomsonCSF
	EF68B21	ThomsonCSF
	UM6520	UMC
	UM6520A	UMC
	UM6521	UMC
	UM6521A	UMC
	UM6522	UMC
	UM6522A	UMC
Port Replacement Unit for MC68HC11, PIA	MC68HC24	Motorola
Priority Interrupt Controller	MC6828	Motorola
	MC8507	Motorola
Programmable Counter/Timer, Dual	**CDP6848**	**RCA (1673,1679)**
Programmable Timer	S6840	GouldAMI
	S68A40	GouldAMI
	S68B40	GouldAMI
	HD6340	Hitachi
	HD63A40	Hitachi
	HD6840	Hitachi
	HD68A40	Hitachi
	HD68B40	Hitachi
	MC6840	**Motorola (1663)**
	MC6840M	**† Motorola (1663)**
	MC68A40	Motorola
	MC68B40	Motorola
	EF6840	ThomsonCSF
	EF68A40	ThomsonCSF
	EF68B40	ThomsonCSF
RAM, Dual Port	MC68HC34	Motorola
RAM(128x8), See 6810, 68A10, and 68B10 series in PART NUMBER INDEX and also MEMORY-RAMs Satic		
ROM, I/O, Timer	PIC7040	GI
	S6846	GouldAMI
	MC6846	**Motorola (1662)**
	MC68A46	Motorola
	MC68B46	Motorola
	TMS7040	TI
	TMS70C40	TI
	EF6846	ThomsonCSF
ROM (2048x8), See 6831, 68A31, 68B31 and 6832 series in PART NUMBER INDEX and also MEMORY-ROMs		
ROM (2048x8), See 6831, 68A316, 68B316 and 6832 series in PART NUMBER INDEX and also MEMORY-ROMs		
ROM(1024x8), See 6830, 68A30, 68B30, 68A308, and 68B308 series in PART NUMBER INDEX and also MEMORY-ROMs		
ROM(4096x8), See 68A332 listing in PART NUMBER INDEX and also MEMORY-ROMs.		
Single Chip Color Palette	EF9369	ThomsonCSF
Synchronous Address Multiplexer	MC6883	Motorola
	SN74LS783	**Motorola (1129)**
Synchronous Receiver/Transmitter (USRT, See also Interface-Serial Transmitters-Receivers)	S2350	GouldAMI
Synchronous Serial Data Adapter (SSDA)	S6852	GouldAMI
	S68A52	GouldAMI
	S68B52	GouldAMI
	HD6852	Hitachi
	HD68A52	Hitachi
	MC6852	**Motorola (1663)**
	MC68A52	Motorola
	MC68B52	Motorola
	EF6852	ThomsonCSF
	EF68A52	ThomsonCSF
	EF68B52	ThomsonCSF
Timer/Counter, Dual	**CDP6848C**	**RCA (1673,1679)**
Video Converter	TS8306	ThomsonCSF
	TS8308	ThomsonCSF
	TS8408	ThomsonCSF
Video Display Generator	**MC6847**	**Motorola (1661)**
	MC68478	Motorola
Triple Bidirectional Bus Switch (also MC3449)	MC6881	Motorola
Triple Timer	MD68SC40	Mitel
Hex Buffers/Inverters (See also Digital-TTL-Buffers/Inverters 8T95, 8T96, 8T97, 8T98)	**MC6885**	**Motorola (3209)**
	MC6886	**Motorola (3209)**
	MC6887	**Motorola (3209)**
	MC6888	**Motorola (3209)**
Octal Buffer/Latch, Three-State	MC3482A	Motorola
	MC3482B	Motorola
	MC6882A	Motorola
	MC6882B	Motorola

7000

Function	Device	Source
Microcomputer (CMOS), RAM, I/O (microlanguage processor)	TMS70C00	TI
Microcomputer (CMOS), RAM, ROM, I/O (microlanguage processor)	TMS70C20	TI
Microcomputer, RAM, E^{2}PROM	72720	SEEQ
Microcomputer, RAM, I/O (microlanguage processor)	PIC7000	GI
	TMS7000	TI
Microcomputer, RAM, ROM, I/O (microlanguage processor)	PIC7020	GI
	PIC7040	GI
	TMS7020	TI
	TMS7040	TI
	TMS70C40	TI
Microcomputer, RAM, ROM, Serial I/O	PIC7041	GI
	TMS7041	TI
Microcomputer, ROM	PIC70100	GI
	PIC70120	GI
	PIC7060	GI
	PIC7080	GI
Microcomputer with UART	PIC7001	GI
Encryption, Federal Processing Standard Pub. 46	TMS7500	TI
	TMS75C00	TI

† Military Temperature Range (−55° to 125°C)

* Typical Value

Bold face indicates additional data is provided on the page noted.

MICROPROCESSOR–System Components (Cont'd)

Function	Device	Source	Line
8 Bit			
8008			
Programmable Communication Interface (See listing under 8080)	8251	Intel	
8048			
Microcomputer, CMOS (mask programmed ROM)			
	µPD80C48	NEC	
	TMP80C48A	**Toshiba (1750)**	
Microcomputer (erasable PROM)			
	AM8748	AMD	
	MBL8749	**Fujitsu (1611)**	5
	8748-8	Intel	
	8748H	Intel	
	8749H	Intel	
	8749H-8	Intel	
	M8748	† Intel	10
	µPD8748	NEC	
	µPD8749	NEC	
Microcomputer (external ROM)			
	MBL8035	**Fujitsu (1611)**	
	MBL8039	**Fujitsu (1611)**	
	MBL80C39	**Fujitsu (1611)**	15
	8035AHL	Intel	
	8039AHL	Intel	
	8039HL	Intel	
	8040AHL	Intel	
	80A35	Intel	20
	80A39	Intel	
	80C35	Intel	
	80C39	Intel	
	M8035L	† Intel	
	IM80C35	**Intersil (1645)**	25
	IM80C39	**Intersil (1645)**	
	INS8035	National	
	INS8035L	National	
	INS8039	National	
	INS8039L	National	30
	INS8040	National	
	INS8040L	National	
	µPD8035L	NEC	
	µPD8039L	NEC	
	µPD80C35	NEC	35
	µPD80C39	NEC	
	MSM80C35	**OKI (4732)**	
	MSM80C39	**OKI (4732)**	
	MSM80C40	**OKI (4732)**	
	SCC80C35	**Signetics (1710)**	40
	SCC80C39	**Signetics (1710)**	
	SCC80C40	**Signetics (1710)**	
	SCN8035A	**Signetics (1712)**	
	SCN8039A	**Signetics (1712)**	
	SCN8040	**Signetics (1712)**	45
	TMP8035	**Toshiba (1750)**	
	TMP8039	**Toshiba (1750)**	
	TMP8039-6	**Toshiba (1750)**	
	TMP80C35A	**Toshiba (1750)**	
	TMP80C39A	**Toshiba (1750)**	50
	TMP80C39A-6	**Toshiba (1750)**	
	TMP80C40A	**Toshiba (1750)**	
	TMP80C40A-6	**Toshiba (1750)**	
Microcomputer (mask programmed ROM)			
	MBL8048	**Fujitsu (1611)**	
	MBL80C49	**Fujitsu (1611)**	55
	8048	Intel	
	8048AH	Intel	
	8048H	Intel	
	8049AH	Intel	
	8049H	Intel	60
	8049HL	Intel	
	8050AH	Intel	
		(Continued)	

Function	Device	Source	Line
Microcomputer (mask programmed ROM) (Cont'd)			
	80A48L	Intel	
	80A49	Intel	
	80C48	Intel	65
	80C49	Intel	
	M8048H	† Intel	
	M8049H	Intel	
	IM80C48	**Intersil (1645)**	
	IM80C49	**Intersil (1645)**	70
	M5L8048	Mitsubishi	
	M5L8049	Mitsubishi	
	M5L80C49	Mitsubishi	
	INS8048	National	
	INS8048L	National	75
	INS8049	National	
	INS8049L	National	
	INS8050	National	
	INS8050L	National	
	µPD8048	NEC	80
	µPD8049	NEC	
	µPD80C49	NEC	
	MSM80C48	**OKI (4732)**	
	MSM80C49	**OKI (4732)**	
	MSM80C50	**OKI (4732)**	85
	SCC80C48	**Signetics (1710)**	
	SCC80C49	**Signetics (1710)**	
	SCC80C50	**Signetics (1710)**	
	SCN8048A	**Signetics (1712)**	
	SCN8049A	**Signetics (1712)**	90
	SCN8050A	**Signetics (1712)**	
	TMP8048	**Toshiba (1750)**	
	TMP8049	**Toshiba (1750)**	
	TMP8049-6	**Toshiba (1750)**	
	TMP80C49A	**Toshiba (1750)**	95
	TMP80C49A-6	**Toshiba (1750)**	
	TMP80C50A	**Toshiba (1750)**	
	TMP80C50A-6	**Toshiba (1750)**	
Microcomputer, Piggyback EPROM			
	NS87P50	National	
Microcomputer, RAM, ROM, Tiny BASIC, Microinterpreter			
	INS8073	National	100
Microcomputer, ROM, RAM, I/O			
	8020H	Intel	
	8021H	Intel	
Microcomputer (ROM, RAM, I/O, on-board A/D)			
	8022	Intel	
	TMP8022	Toshiba	
Analog Input, Multiplexer, A/D Converter			
	MP21	**Burr-Brown (3148)**	105
	MP22	**Burr-Brown (3148)**	
	MP32	**Burr-Brown (3148)**	
Bidirectional Bus Driver. See 8216, 8226, etc. under 8080			
	8216	Intel	
	8226	Intel	
	µPB8216	NEC	110
	µPB8226	NEC	
Bidirectional Bus Driver. See 8216, 8266, etc. under 8080.			
	MB425	Fujitsu	
	MB426	Fujitsu	
CRT Controller. See 8275, etc. under 8080.			
	8275	Intel	
	µPD3301	NEC	115
	SCN2672	**Signetics (1700)**	
Decoder, 1 of 8. See 8205, etc. under 8080.			
	8205	Intel	

Function	Device	Source	Line
Floppy Disc Controller. See 8271, etc. under 8080.			
	8271	Intel	
	8271-6	Intel	
	µPD765A	NEC	120
	SSI440	SiliconSys	
	FD1793-02	Western	
	FD1797-02	Western	
GPIB Talker/Listener			
	8291	Intel	
I/O Expander for 8048 Family			
	MBL8243	**Fujitsu (1611)**	125
	MBL82C43	Fujitsu	
	8243	Intel	
	M8243	† Intel	
	INS8243	National	
	µPD8243	NEC	130
	µPD82C43	NEC	
	MCM82C43	OKI	
	TMP82C43	**Toshiba (1750)**	
Keyboard/Display Controller, See 8279, etc. under 8080.			
Multi-Universal Asynchronous Receiver Transmitter			
	SAB8256A	Siemens	135
Priority Interrupt Control. See 8214, etc. under 8080.			
	8214	Intel	
Programmable Communication Interface (USART) See 8251, etc. under 8080.			
	8251A	AMD	
	8251A	Intel	
	71051	NEC	
	µPD71051	NEC	140
	µPD8251	NEC	
	µPD8251A	NEC	
	µPD8251AF	NEC	
	MSM82C51A	**OKI (4732)**	
	TMP8251A	**Toshiba (1750)**	145
Programmable Interrupt Controller. See 8259, etc. under 8080.			
	8259	Intel	
	8259-5	Intel	
	8259A	Intel	
	8259A-2	Intel	
	8259A-8	Intel	150
	µPD8259	NEC	
	µPD8259-2	NEC	
	µPD9259A	NEC	
	TMP8259A	**Toshiba (1750)**	
	UM8259	UMC	155
Programmable Interval Timer. See 8253, etc. under 8080.			
	8253	AMD	
	8253-2	AMD	
	µPD8253-2	NEC	
	µPD8253-5	NEC	
	SMC82C54A	S-MOS	160
Programmable Peripheral Interface. See 8255, etc. under 8080.			
	8255A	AMD	
	8255A-5	AMD	
	8255A	Intel	
	µPD8255	NEC	
	µPD8255A-5	NEC	165
	SMC82C55A-5	S-MOS	
PROM (erasable), I/O			
	8755A	Intel	
	µPD8755A	NEC	
RAM, I/O, Timer			
	8155	AMD	
	8155-2	AMD	170
	8156-2	AMD	
	HS81C55RH	**Harris (626)**	
	HS81C56RH	**Harris (626)**	
	8155	Intel	
	8155-2	Intel	175
	8155H	Intel	
		(Continued)	

† Military Temperature Range (−55° to 125°C)

* Typical Value

Bold face indicates additional data is provided on the page noted.

MICROPROCESSOR–System Components (Cont'd)

8 Bit

8048 (Cont'd)

Function	Device	Source	Line
RAM, I/O, Timer (Cont'd)	8155H-2	Intel	
	8156	Intel	
	8156-2	Intel	
	8156H	Intel	
	8156H-2	Intel	5
	M8155H	† Intel	
	μPD8155	NEC	
	μPD8156	NEC	
	MSM81C55	**OKI (4732)**	
	TMP8155	**Toshiba (1750)**	10
	TMP8156	**Toshiba (1750)**	
ROM, I/O	**HS83C55RH**	**Harris (628)**	
	8355	Intel	
	8355-2	Intel	
	MSM83C55	**OKI (4732)**	15
SDLC/HDLC Protocol Controller. See 8273, etc. under 8080.	8273	Intel	
Universal Peripheral Interface (slave microprocessor)	**MBL8041A**	**Fujitsu (1611)**	
	8041AH	Intel	
	8041AH-2	Intel	
	8042	Intel	20
	8641A	Intel	
	8741A	Intel	
	8742	Intel	
	M8741A	† Intel	
	M5L8041A	Mitsubishi	25
	μPD8041	NEC	
	μPD8041A	NEC	
	μPD8741A	Signetics	
Octal Bus Transceiver	M8286	† Intel	
	M8287	† Intel	30

8051

Function	Device	Source	Line
Microcomputer and HDLC/SDLC Serial Interface	8044	Intel	
	8744	Intel	
Microcomputer (erasable PROM)	8751H	AMD	
	AM9761	AMD	
	8751	Intel	35
	M8751H	† Intel	
Microcomputer (external ROM)	8031AH	AMD	
	8031AH-15	AMD	
	MBL8031	**Fujitsu (1611)**	
	8031AH	Intel	40
	80C31	Intel	
	IM80C31	Intersil	
	8031	Siemens	
	SCC80C31	**Signetics (1716)**	
	SCN8031	**Signetics (1714)**	45
Microcomputer (mask programmed ROM)	**MBL8051**	**Fujitsu (1611)**	
	8051AH	Intel	
	8052	Intel	
	80C51	Intel	
	M80C51	† Intel	50
	IM8051	Intersil	
	IM80C51	Intersil	
	MCM80C51	OKI	
	8051	Siemens	
	SCC80C51	**Signetics (1716)**	55
	SCN8051	**Signetics (1714)**	
Microcontroller, serial bus	**SCC80C351**	**Signetics (3733)**	
	SCC83C351	**Signetics (3733)**	
Clock/Calendar, Real-Time	CA01C50	Calmos	

8080

Function	Device	Source	Line
See also Z80.			60
Microprocessor	8080A	AMD	
	8080A-1	AMD	
	8080A-2	AMD	
	AM9080A-1	AMD	
	AM9080A-2	AMD	65
	8080A	Intel	
	8080A-1	Intel	
	8080A-2	Intel	
	M8080A	† Intel	
	INS8080A	National	70
	INS8080A-1	National	
	INS8080A-2	National	
Analog Input, MUX, A/D Converter	**MP20**	**Burr-Brown (3148)**	
	MP22	**Burr-Brown (3148)**	
	MP32	**Burr-Brown (3148)**	75
	ADC0816C	National	
	μPD7001	NEC	
	μPD7002	NEC	
Analog Input, 3 3/4 Digit DVM with Multiplexed Output	INS8294	National	
Arithmetic Processing Unit	AM8231	† AMD	80
	AM9511A-1	AMD	
	8231A	Intel	
	M8231A	† Intel	
Asynchronous Communication Element	DP8250	National	
	INS8250	National	85
	VL82C50	**VTI (1751,1752,1763)**	
	TR1983	Western	
Bidirectional Bus Driver	8216	Intel	
	8226	Intel	
Bidirectional Bus Driver (See also Digital-Miscellaneous-Bus Drivers, Interface-Line Transceivers.)	AM3216	AMD	90
	AM3226	AMD	
	M3216	† AMD	
	M3226	† AMD	
	M8216	† AMD	
	M8226	† AMD	95
	HS82C08RH	**Harris (634)**	
	M8216	† Intel	
	M8226	† Intel	
	M5L8216	Mitsubishi	
	DP3216	National	100
	DP3226	National	
	DP7304	† National	
	DP8216	National	
	DP8216M	† National	
	DP8226	National	105
	DP8226M	† National	
	DP8304	National	
	DS8833	National	
	DS8835	National	
	INS8208	National	110
	INS8216	National	

(Continued)

Function	Device	Source	Line
Bidirectional Bus Driver (See also Digital-Miscellaneous-Bus Drivers, Interface-Line Transceivers.) (Cont'd)	INS8226	National	
	μPB8216	NEC	
	μPB8226	NEC	
Bus Controller	8218	Intel	115
Bus Driver (See also Digital-Misc., Bus Drivers	INS8202	National	
	INS8203	National	
Bus Monitor	MD68SC49B	Mitel	
Clock/Calendar, Real-Time	CA01C50	Calmos	
Clock Generator and Driver	8224	Intel	120
	M8224	† Intel	
	DP8224	National	
	INS8224	National	
CRT Controller	8275	Intel	
	8276	Intel	125
	DP8350	National	
	DP8352	National	
	DP8353	National	
	μPD3301	NEC	
CRT Controller, Character and Screen Programmable, Cursor, Light Pen Detection	**MB89322**	**Fujitsu (1611)**	130
Data Acquisition System, 8 Channel, 8-Bit Conversion	AD7581A	AD	
	AD7581B	AD	
	AD7581C	AD	
	AD7581J	AD	
	AD7581K	AD	135
	AD7581L	AD	
Data Ciphering Processor	AM9518	AMD	
Data-Encryption Device (encrypts and decrypts data according to NBS standard)	8294	Intel	
Decoder, 1 of 8 (See also Digital-TTL-Decoders, 3222, 74LS138, etc.)	AM25LS138C	AMD	
	AM25LS138M	† AMD	140
	8205	Intel	
	DM74LS138	National	
	INS82LS05	National	
	SN74LS138	TI	
Display Controller	INS8247	National	145
	INS8248	National	
Dynamic RAM Controller	8202A	Intel	
	8203	Intel	
	82C03	Intel	
Erasable PROMs. See Memory-PROMs and 8708 listing in PART NUMBER INDEX			150
Error Detection & Correction Chip	8206	Intel	
Floating Point Processor	AM8232	AMD	
	8232	Intel	
Floppy Disc Controller	8271	Intel	155
	μPD765A	NEC	
	SSI440	SiliconSys	
	FD1793-02	Western	
	FD1797-02	Western	
GPIB Controller	8292	Intel	160

† Military Temperature Range (−55° to 125°C)

* Typical Value

Bold face indicates additional data is provided on the page noted.

MICROPROCESSOR–System Components (Cont'd)

8 Bit

8080 (Cont'd)

Function	Device	Source
GPIB Interface Controller, Intelligent		
	COM7210	SMC
GPIB Talker/Listener Interface		
	8291A	Intel
GPIB Transceiver		
	8293	Intel
I/O Expander for 8041/8741, CMOS		
	MBL8243E	**Fujitsu (1611)**
	MBL8243N	**Fujitsu (1611)**
	IM82C43I	**Intersil (1645)**
	IM82C43M	**† Intersil (1645)**
I/O Expander for 8041A/8741A		
	8243	Intel
	TMP8243	**Toshiba (1750)**
I/O Latch (see also Digital-CMOS and TTL, Latches)		
	INS82C06	National
I/O Port	AM3212	AMD
	M3212	† AMD
	HS82C12RH	**† Harris (635)**
	8212	Intel
	M8212	† Intel
	M5L8212	Mitsubishi
	DP8212	National
	DP8212M	† National
	INS8212	National
	μPB8212	NEC
	MSM82C12	**OKI (4732)**
	SN74S412	TI
Keyboard Display Controller		
	8279	Intel
	8279-5	Intel
	M5L8279-5	Mitsubishi
	μPD8279-5	NEC
Keyboard Encoder (See also Interface-Keyboard Encoders)		
	INS8244	National
	INS8245	National
	INS8246	National
Multi-Protocol Communications Circuit		
	SCN2652A	**Signetics (1686)**
Multi-Protocol Communications Controller (SDLC, ADDCP, BiSync, DDCMP)		
	SCN2652A	**Signetics (1686)**
Multi-Universal Asynchronous Receiver Transmitter		
	8256	Intel
	SN74S428	TI
	TIM8228	TI
	TIM8238	TI
Polynominal Generator/Checker		
	SCN2653A	**Signetics (1688)**
Programmable Communication Interface (USART) (See also Interface-Transmitters, Receivers)		
	8251	AMD
	AM9551	AMD
	8251A	Intel
	M8251A	† Intel
	INS2651	National
	INS8251	National
	71051	NEC
	μPD8251	NEC
	μPD8251A	NEC
	MSM82C51A	**OKI (4732)**
	SMC82C51A	S-MOS
	SCN2651C	**Signetics (1684)**
	SCN2661A	**Signetics (1690)**
	SCN2661B	**Signetics (1690)**
	SCN2661C	**Signetics (1690)**
	COM2651	SMC
	COM8251A	SMC
		(Continued)
Programmable Communication Interface (USART) (See also Interface-Transmitters, Receivers) (Cont'd)		
	TMS5501	TI
Programmable Counter		
	μPD71054	NEC
Programmable Direct Memory Access Controller		
	AM9517A-5	AMD
	8257	Intel
	8257-5	Intel
	M8257	† Intel
	μPD71057	NEC
	μPD8257	NEC
	μPD8257-5	NEC
Programmable Interrupt Controller		
	8259A	Intel
	8259A-2	Intel
	8259A-8	Intel
	INS8259	National
	μPD8259	NEC
	μPD8259-2	NEC
	μPD9259A	NEC
Programmable Interval Timer		
	8253	AMD
	8253-2	AMD
	CA82C53	Calmos
	INS8253	National
	INS8253-5	National
	μPD8253-2	NEC
	μPD8253-5	NEC
	SMC82C54A	S-MOS
Programmable Peripheral Interface		
	8255A	AMD
	8255A-5	AMD
	8255A	Intel
	M8255A	† Intel
	INS8254	National
	INS8255	National
	μPD8255	NEC
	μPD8255A-5	NEC
	MSM8255A	OKI
	MSM82C55A	**OKI (4732)**
	SMC82C55A-5	S-MOS
RAM: See Memory—Static or Dynamic RAMS		
RAM(128x8), ROM(2048x8), I/O		
	DP8356	National
RAM(128x8) with 16-Bit I/O		
	INS8154	National
RAM(1024x1): See 8102 listings in PART NUMBER INDEX and MEMORY-RAMs, Static		
RAM(256x4), See 8101 and 8111 listings in PART NUMBER INDEX and also MEMORY-RAMs, Static		
ROMs: See MEMORY-ROMs		
SDLC/HDLC Protocol Controller		
	8273	Intel
See also Z80.		
Serial Data Communications Controller		
	8274	Intel
System Controller and Bus Driver		
	8228	Intel
	8238	Intel
	M8228	† Intel
	DP8228	National
	DP8228M	† National
	DP8238	National
	DP8238M	† National
		(Continued)
System Controller and Bus Driver (Cont'd)		
	INS8228	National
	INS8238	National
Universal Peripheral Interface (slave microprocessor)		
	MBL8041A	**Fujitsu (1611)**
	8041AH	Intel
	8041AH-2	Intel
	8641A	Intel
	8741A	Intel
	μPD8041	NEC
	μPD8741A	NEC
Octal Bus Transceiver		
	M8286	† Intel
	M8287	† Intel
8-Bit I/O Port	CA82C12	Calmos

8085A

Function	Device	Source
Many devices for the 8080 are also suitable for the 8085		
Microprocessor		
	8085A	AMD
	8085A-1	AMD
	8085A-2	AMD
	8085AH	AMD
	8085AH-1	AMD
	8085AH-2	AMD
	CA80C85B	Calmos
	HS80C85RH	**Harris (624,637)**
	8085AH	Intel
	8085AH-2	Intel
	M8085A	† Intel
	M8085AH	† Intel
	M5L8085A	Mitsubishi
	μPD8085A-2	NEC
	μPD8085AH	NEC
	MSM80C85A	**OKI (4732)**
	TMP8085A	**Toshiba (1750)**
Analog Input, Multiplexer, A/D Converter		
	MP21	**Burr-Brown (3148)**
Bidirectional Bus Driver. See 8216, 8226, etc. under 8080.		
	8216	Intel
	8226	Intel
	μPB8216	NEC
	μPB8226	NEC
Bus Controller	8219	Intel
Bus Monitor	MD68SC49B	Mitel
Clock/Calendar, Real-Time		
	CA01C50	Calmos
CRT Controller. See 8275, etc. under 8080.		
	8275	Intel
	μPD3301	NEC
Data Acquisition System, 8 Channel, 8-Bit Conversion		
	AD7581A	AD
	AD7581B	AD
	AD7581C	AD
	AD7581J	AD
	AD7581K	AD
	AD7581L	AD
Decoder, 1 of 8. See 8205, etc. under 8080.		
	8205	Intel
Dynamic RAM Controller		
	8202A	Intel
	8203	Intel
	82C03	Intel
Erasable PROM, I/O		
	8755A	Intel
	M8755A	† Intel
	μPD8755A	NEC
	MSM8755	OKI

† Military Temperature Range (−55° to 125°C)

* Typical Value

Bold face indicates additional data is provided on the page noted.

MICROPROCESSOR–System Components (Cont'd)

8 Bit

8085A (Cont'd)

Function	Device	Source	Line
Floppy Disc Controller. See 8271, etc. under 8080.			
	8271	Intel	
	µPD765A	NEC	
	FD1793-02	Western	
	FD1797-02	Western	
GPIB Controller	8292	Intel	5
GPIB Interface Controller, Intelligent			
	COM7210	SMC	
GPIB Talker/Listener Interface			
	8291A	Intel	
I/O Expander	8243	Intel	
	M5L8243	Mitsubishi	
	µPD8243	NEC	10
	µPD82C43	NEC	
I/O Port. See 8212, etc. under 8080.			
Keyboard Display Controller—See listing under 8080			
Many devices for the 8080 are also suitable for the 8085			
Multi-Universal Asynchronous Receiver Transmitter			
	SAB8256A	Siemens	15
Priority Interrupt Control. See 8214, etc. under 8080.			
Programmable Communication Interface (USART)			
	8251	AMD	
	8251A	Intel	
	M5L8251A	Mitsubishi	
	71051	NEC	20
	µPD8251	NEC	
	µPD8251A	NEC	
	MSM82C51A	**OKI (4732)**	
	SMC82AC51	S-MOS	
	SMC82C51A	S-MOS	25
Programmable Direct Memory Access Controller			
	8237A	AMD	
	8237A-4	AMD	
	8237A-5	AMD	
	CA82C37	Calmos	
	8237A	Intel	30
	8237A-4	Intel	
	8237A-5	Intel	
	M8257	† Intel	
	M5L8257-5	Mitsubishi	
	µPD8237A-5	NEC	35
	SMC82C37AC	S-MOS	
	SMC82C37AC-4	S-MOS	
	SMC82C37AC-5	S-MOS	
	VL82C37A	**VTI (1751,1752,1767)**	
Programmable Direct Memory Access Controller.			
	8257	Intel	40
	8257-5	Intel	
	µPD71057	NEC	
	µPD8257	NEC	
	µPD8257-5	NEC	
	MSM82C57	OKI	45
Programmable Interrupt Controller			
	8259A	AMD	
	8259A-2	AMD	
	8259A-8	AMD	
	CA82C59A	Calmos	
	8259A	Intel	50
	8259A-2	Intel	
	8259A-8	Intel	
	M8259A	† Intel	
	M5L8259A	Mitsubishi	
	µPD8259	NEC	55
	µPD8259-2	NEC	
	µPD9259A	NEC	

Function	Device	Source	Line
Programmable Interval Timer			
	8253-5	AMD	
	CA82C54	Calmos	
	8253	Intel	60
	8253-5	Intel	
	8254	Intel	
	M8253	† Intel	
	M5L8253-5	Mitsubishi	
	INS8253-5	National	65
	µPD8253-2	NEC	
	µPD8253-5	NEC	
	MSM82C53-5	**OKI (4732)**	
	TMP8253-5	**Toshiba (1750)**	
	UM8254	UMC	70
Programmable Peripheral Interface			
	8255A-5	AMD	
	8255A-5	Intel	
	M5L8255A-5	Mitsubishi	
	µPD8255A-5	NEC	
	SMC82C55AC-5	S-MOS	75
	TMP8255A-5	**Toshiba (1750)**	
PROM (erasable), I/O			
	8755A	Intel	
	µPD8755A	NEC	
RAM, I/O, Timer			
	8155	AMD	
	8155-2	AMD	80
	8156-2	AMD	
	8156H	AMD	
	HS81C55RH	**Harris (626)**	
	HS81C56RH	**Harris (626)**	
	8155	Intel	85
	8155-2	Intel	
	8156	Intel	
	8156-2	Intel	
	M8155	† Intel	
	M5L8155	Mitsubishi	90
	M5L8156	Mitsubishi	
	µPD8155	NEC	
	µPD8156	NEC	
	MSM8155	OKI	
	MSM81C55	**OKI (4732)**	95
RAM (1024x8) (See also: Memory-RAMs)			
	8185	Intel	
	8185-2	Intel	
	M8185	† Intel	
ROM, I/O	**HS83C55RH**	**Harris (628)**	
	8355	Intel	100
	8355-2	Intel	
	MSM83C55	**OKI (4732)**	
	TMP8355	**Toshiba (1750)**	
SDLC/HDLC Protocol Controller. See 8273, etc. under 8080.			
	8273	Intel	
Universal Peripheral Interface (slave microprocessor)			
	MBL8041A	**Fujitsu (1611)**	105
	8041A	Intel	
	8741A	Intel	
	µPD8041	NEC	
	µPD8741A	NEC	
Octal Bus Transceiver			
	M8286	† Intel	110
	M8287	† Intel	
Octal Bus Transceiver, Inverting			
	8287	Intel	
Octal Bus Transceiver, Non-Inverting			
	8286	Intel	
8-Bit I/O Port	CA82C12	Calmos	

8086/88

Function	Device	Source	Line
Bus Monitor	MD68SC49B	Mitel	115

Function	Device	Source	Line
Programmable Interval Timer			
	CA82C54	Calmos	

8088

Function	Device	Source	Line
Clock/Calendar, Real-Time			
	CA01C50	Calmos	

8080A

Function	Device	Source	Line
Programmable Interval Timer			
	CA82C53	Calmos	

8X300

Function	Device	Source	Line
Microprocessor			
	N8X300	Signetics	
	N8X305	Signetics	120
	S8X300-1	† Signetics	
	S8X300-2	† Signetics	
	S8X305	† Signetics	
FIFO RAM Controller			
	N8X60	Signetics	
	S8X60	† Signetics	125
Floppy Disk Controller			
	N8X330	Signetics	
I/O Port, Asynchronous, Field Programmable Address			
	N8T36	Signetics	
	N8X376	Signetics	
	S8T35	† Signetics	
	S8T36	† Signetics	130
	S8X376	† Signetics	
I/O Port, Latched Bidirectional			
	N8T31	Signetics	
	N8X371	Signetics	
	S8X371	† Signetics	
I/O Port, Synchronous, Field Programmable Address			
	N8T32	Signetics	135
	N8T33	Signetics	
	N8X372	Signetics	
	N8X382	Signetics	
	N8X42	Signetics	
	S8T32	† Signetics	140
	S8T33	† Signetics	
	S8X372	† Signetics	
	S8X382	† Signetics	
I/O Port with Parity			
	N8X374	Signetics	
	S8X374	† Signetics	145
I/O Register Array (16x8 or 8x16)			
	N8X320	Signetics	
Interrupt Controller			
	N8X310	Signetics	
	S8X310	† Signetics	
LIFO Stack Memory (32x8)			
	N8X355	Signetics	
	S8X355	† Signetics	150
Memory Address Director			
	N8X360	**Signetics (1744)**	
	S8X360	† Signetics	
RAM, Static (32x8)			
	N8X353	Signetics	
	S8X353	† Signetics	
RAM, Static (256x8)			
	N8X350	**Signetics (4166)**	155
	S8X350	† Signetics	

µPD7810

Function	Device	Source	Line
Microcomputer	µPD7807	NEC	
	µPD7809	NEC	
	µPD78P09	NEC	

† Military Temperature Range (−55° to 125°C)

* Typical Value

Bold face indicates additional data is provided on the page noted.

MICROPROCESSOR–System Components (Cont'd)

8 Bit

µPD7810 (Cont'd)

Function	Device	Source	Line
Microcomputer with A/D Converter	µPD7810	NEC	
	µPD7811	NEC	

F8

Function	Device	Source	Line
Microprocessor	MK3850	Mostek	
Analog Input, MUX, A/D Converter	**MP21**	**Burr-Brown** **(3148)**	
Direct Memory Access	MK3854	Mostek	5
Dynamic Memory Interface	MK3852	Mostek	
Peripheral Input/Output Interface	MK3861	Mostek	
Program Storage Unit	MK3851	Mostek	
Static Memory Interface	MK3853	Mostek	

HD64180

Function	Device	Source	Line
Microprocessor, DMA Controller, ASCI, I/O Port and Timer	**HD64180**	**Hitachi** (1632)	10

INS8060

Function	Device	Source	Line
Microprocessor	INS8060	National	
Analog Input, Multiplexer, A/D Converter	**MP20**	**Burr-Brown** **(3148)**	
	MP22	**Burr-Brown** **(3148)**	
	MP32	**Burr-Brown** **(3148)**	
Bit Programmable I/O	INS8254	National	15
Programmable Communication Interface (See also Interface Transmitters-Receivers)	INS8250	National	
	INS8251	National	
	VL82C50	**VTI** **(1751,1752,1763)**	
Programmable Peripheral Interface	INS8255	National	
RAM(128x8) and I/O	INS8154	National	20
4-Bit Latch	DM74LS175	National	
8-Bit I/O Port	DP8212	National	
	INS8212	National	

NSC800

Function	Device	Source	Line
Microprocessor	NSC800	National	
	MPU800	SMC	25
Microprocessor (CMOS)	NSC800-1	National	
	NSC800-4	National	
	MPU800-1	SMC	
	MPU800-4	SMC	
Bidirectional Transceiver	MM82PC08	National	30
Bidirectional Transceiver (CMOS)	MM82PC08	National	
I/O, 3 Programmable Ports	NSC831	National	
Intelligent I/O, 3 Programmable Ports (CMOS)	NSC831-1	National	
	NSC831-4	National	
	MPU831	SMC	35
RAM, I/O, Timer	NSC810	National	
RAM, I/O, Timer (CMOS)	NSC810-1	National	
	NSC810-4	National	
	MPU810A	SMC	
	MPU810A-1	SMC	40
	MPU810A-4	SMC	
ROM, I/O	NSC830	National	
ROM, I/O (CMOS)	NSC830-1	National	
	NSC830-4	National	
	MPU830	SMC	45
UART	NSC858	National	
8-Bit I/O Port	MM82PC12	National	

Z8

Function	Device	Source	Line
Microcomputer	**Z8601-MCU**	**Zilog** (1774)	
	Z8603-MCU	**Zilog** (1774)	
	Z8611-MCU	Zilog	50
	Z8612-MCU	Zilog	
	Z8613-MCU	Zilog	
	Z8671-MCU	Zilog	
	Z8681-MCU	**Zilog** (1775)	
	Z8682-MCU	Zilog	55
	Z86L01	Zilog	
	Z86L11	Zilog	
	Z86L81	Zilog	
	Z86P11	Zilog	
	Z8800	**Zilog** (1776)	60

Z80

Note: the 6500, 6800 and 8080 peripheral circuits are compatible with the Z80 series.

Function	Device	Source	Line
Microprocessor	**Z8400**	**Goldstar** (1612)	
	MK3880-6	Mostek	
	MKB3880-80	† Mostek	
	MKB3880-84	† Mostek	65
	µPD780	NEC	
	µPD780-1	NEC	
	SMC84C00	S-MOS	
	Z80-CPU	SGS	
	Z80A-CPU	SGS	70
	LH0080	Sharp	
	LH0080A	Sharp	
	LH0800B	Sharp	
	TMPZ84C00	**Toshiba** (1750)	
	TMPZ84C00-3	**Toshiba** (1750)	75
	Z80	Zilog	
	Z80A	Zilog	
	Z80B	Zilog	
	Z80L	Zilog	
	Z8400	Zilog	80
	Z84C00	**Zilog** (1773)	
Microprocessor, Low Power	Z8300-CPU	Zilog	
Analog Input, Multiplexer, A/D Converter	**MP20**	**Burr-Brown** **(3148)**	
	MP22	**Burr-Brown** **(3148)**	
	MP32	**Burr-Brown** **(3148)**	85
Bus Monitor	MD68SC49B	Mitel	
Clock Generator and Controller	**T6497**	**Toshiba** (1750)	
Counter Timer Circuit	**Z8430**	**Goldstar** (1612)	
	MK3882	Mostek	
	MKB3882-80	† Mostek	90
	MKB3882-84	† Mostek	
	Z80-CTC	SGS	
	Z80A-CTC	SGS	
	LH0082	Sharp	
	LH0082A	Sharp	95
	LH0082B	Sharp	
	TMPZ84C30	**Toshiba** (1750)	
	Z8430-CTC	Zilog	
	Z84C30	**Zilog** (1773)	
Counter Timer Circuit, Low Power	Z8330-CTC	Zilog	100
Data Acquisition System, 8 Channel, 8-Bit Conversion	AD7581A	AD	
	AD7581B	AD	
	AD7581C	AD	
	AD7581J	AD	
	AD7581K	AD	105
	AD7581L	AD	
	AD8581B	AD	
Direct Memory Access Controller	MK3883	Mostek	
	Z80-DMA	SGS	
	Z80A-DMA	SGS	110
	LH0083	Sharp	
	LH0083A	Sharp	
	TMPZ84C10	**Toshiba** (1750)	
	Z80A-DMA	Zilog	
	Z8410-DMA	Zilog	115
Microprocessor	µPD7008	NEC	
	µPD7008A	NEC	
	µPD780-2	NEC	
Parallel Input/Output Controller	**Z8420**	**Goldstar** (1612)	
	MK3881	Mostek	120
	MKB3881-80	† Mostek	
	MKB3881-84	† Mostek	
	Z80-PIO	SGS	
	Z80A-PIO	SGS	
	LH0081	Sharp	125
	LH0081B	Sharp	
	TMPZ84C20	**Toshiba** (1750)	
	Z8420-PIO	Zilog	
	Z84C20	**Zilog** (1773)	
Parallel Input/Output Controller, Low Power	Z8320-PIO	Zilog	130
Programmable Peripheral Interface	**TMP82C55**	**Toshiba** (1750)	
Serial Input/Output Controller	**Z8440**	**Goldstar** (1612)	
	MK14007	Mostek	
	MK3884	Mostek	
	MK3885	Mostek	135
	MK3887	Mostek	
	Z80-SIO	SGS	
	Z80A-SIO	SGS	
	LH0084	Sharp	
	LH0084A	Sharp	140
	LH0085	Sharp	
	LH0085A	Sharp	
	LH0086	Sharp	
	LH0086A	Sharp	
	TMPZ84C40	**Toshiba** (1750)	145
	TMPZ84C41	**Toshiba** (1750)	
	TMPZ84C42	**Toshiba** (1750)	

(Continued)

† Military Temperature Range (−55° to 125°C)

* Typical Value

Bold face indicates additional data is provided on the page noted.

MICROPROCESSOR-System Components (Cont'd)

Function	Device	Source	Line
8 Bit			
Z80 (Cont'd)			
Serial Input/Output Controller (Cont'd)			
	Z80-SIO	Zilog	
	Z8440-SIO	Zilog	
	Z8440A-SIO	Zilog	
	Z8440B-SIO	Zilog	
	Z8441-SIO	Zilog	5
	Z8441B-SIO	Zilog	
	Z8442-SIO	Zilog	
	Z8442A-SIO	Zilog	
	Z8442B-SIO	Zilog	
	Z8449	Zilog	10
	Z84C40	**Zilog (1774)**	
	Z84C41	**Zilog (1774)**	
	Z84C42	**Zilog (1774)**	
	Z84C44	**Zilog (1774)**	
Serial Input/Output Controller, Low Power			
	Z8340-SIO	Zilog	15
Dual Asynchronous Receiver/Transmitter			
	Z8470	**Goldstar (1612)**	
	Z80-DART	SGS	
	Z80A-DART	SGS	
	Z80-DART	Zilog	
	Z8470-DART	Zilog	20
Z800			
Note: Z80 peripheral circuits and Z8500 universal peripheral circuits are compatible with the Z800 series.			
Microprocessor			
	Z8108	Zilog	
Arithmetic Processing Unit			
	Z8070-Z-APU	Zilog	
Family of 8 and 16-Bit Microprocessors			
	Z800	Zilog	
8/16 Bit			
1600			
Asynchronous/Synchronous Transmitter/Receiver (ASTRO) (See also Interface-Serial Transmitters-Receivers)			
	COM1671	SMC	25
	UC1671	Western	
Floppy Disc Controller/Formatter			
	MB8866	Fujitsu	
	INS1771	National	
	FD1771-01	Western	
	FD1791-02	Western	30
	FD1795-02	Western	
8086			
Microprocessor, High Integration			
	iAPX186	AMD	
Microprocessor, Numeric Data			
	80287	Intel	
Microprocessor, Operating System			
	80130	Intel	
Microprocessor, 16-Bit			
	8086	AMD	35
	8086-1	AMD	
	8086-2	AMD	
	MBL8086	**Fujitsu (1611)**	
	MBL8086-1	**Fujitsu (1611)**	
	MBL8086-2	**Fujitsu (1611)**	40
	80286	Intel	
	8086	Intel	
	8086-1	Intel	
	8086-2	Intel	
	M8086	† Intel	45
		(Continued)	

Function	Device	Source	Line
Microprocessor, 16-Bit (Cont'd)			
	µPD8086	NEC	
	µPD8086-2	NEC	
	SAB8086C	Siemens	
Microprocessor, 16-Bit (CMOS)			
	80C86	**Harris (682,1618,1631**	
	MSM80C86	**OKI (4732)**	50
Bus Controller	82288	AMD	
	MBL82288	**Fujitsu (1611)**	
	82288	Intel	
	UM82C88	UMC	
Clock and Ready Interface, for iAPX286			
	MBL82284	**Fujitsu (1611)**	55
	82284	Intel	
Occam Programming System			
	Occam	Inmos	
8086/88			
Many devices for the 8080 and 8085A are also suitable for the 8086 and 8088			
Microprocessor, High Integration			
	MBL80186	**Fujitsu (1611)**	
	MBL80186-6	**Fujitsu (1611)**	60
	80186	Intel	
Microprocessor, I/O Preprocessor			
	8089	AMD	
	MBL8089	**Fujitsu (1611)**	
	8089	Intel	
Microprocessor, 8-Bit			
	80188-1	AMD	65
	80188-3	AMD	
	80188-6	AMD	
Microprocessor, 8-bit data, 16-bit CPU			
	80188	Intel	
Microprocessor, 16-Bit			
	80186-1	AMD	
	80186-3	AMD	70
	80186-6	AMD	
Asynchronous Communications Element			
	82C50	**Harris (1620,1628)**	
Bus Arbiter	AM8289	AMD	
	MBL8289	**Fujitsu (1611)**	
	82C89	**Harris (682,1619,1623**	
	8289	Intel	
	M8289	† Intel	
	M5L8289	Mitsubishi	
	µPB8289	NEC	
	SAB8289	Siemens	80
Bus Controller	8288	AMD	
	82C288	AMD	
	AM8288	AMD	
	MBL8288	**Fujitsu (1611)**	
	82C88	**Harris (682,1619,1623**	
	8288	Intel	
	M8288	† Intel	
	M5L8288	Mitsubishi	
	µPB8288	NEC	
	µPD71088	NEC	90
	MSM82C88	**OKI (4732)**	
	SAB8288	Siemens	
Bus Controller for 10 MHz systems			
	8288-1	Intel	
Bus Controller, 80186-8087 Interface			
	82188	Intel	

Function	Device	Source	Line
Clock Generator and Driver			
	8284A	AMD	95
	MBL8284A	**Fujitsu (1611)**	
	8284A	Intel	
	8284A-1	Intel	
	M8284	† Intel	
	M5L8284A	Mitsubishi	100
	µPB8284A	NEC	
	µPD71084	NEC	
	SAB8248A	Siemens	
Clock Generator/Controller, Static			
	82C85	**Harris (1619,1623,1626**	
Clock Generator/Driver			
	82C84A	**Harris (682,1619,1623**	
	MSM82C84A	**OKI (4732)**	
	UM82C84A	UMC	
DMA Controller	82258	Intel	
	SMC82C37	S-MOS	
Dynamic RAM Controller			
	8202A	Intel	110
	8203	Intel	
	8207	Intel	
	8208	Intel	
Dynamic RAM Controller Interface Circuit			
	DP84332	National	
	DP84422	National	115
GPIB Interface Controller, Intelligent			
	COM7210	SMC	
GPIB Talker/Listener			
	8291A	Intel	
Many devices for the 8080 and 8085A are also suitable for the 8086 and 8088			
Multi-Universal Asynchronous Receiver Transmitter			
	82C56	Harris	
	8256	Intel	120
	SAB8256A	Siemens	
Priority Interrupt Controller			
	82C59A	**Harris (682,1619,1621**	
	MSM82C59A	**OKI (4732)**	
	SMC82C59AC	S-MOS	
Programmable Asychronous Communications Interface			
	HD6406	**Harris (1624,1630)**	125
Programmable Interrupt Controller			
	MBL8259A	**Fujitsu (1611)**	
	8259A	Intel	
	SMC82C59AC	S-MOS	
	SAB8259A	Siemens	
	SAB8259A-2	Siemens	130
	SAB8259A-8	Siemens	
Programmable Interval Timer			
	CA82C53	Calmos	
	82C54	**Harris (682,1619,1620**	
	SMC82C54AC	S-MOS	
Programmable Peripheral Interface			
	82C55A	**Harris (682,1619,1621**	
	SRM82C55AC	S-MOS	
	UM82C55A	UMC	
Serial Communications Interface			
	82C52	**Harris (682, 1620, 1629)**	
Text Coprocessor	82730	Intel	
Universal DMA Controller, 16-Bit, 10 MHz			
	AM9516A-1	AMD	140
Universal DMA Controller, 16-Bit, 4 MHz			
	AM9516A-4	AMD	

† Military Temperature Range (−55° to 125°C)

* Typical Value

Bold face indicates additional data is provided on the page noted.

MICROPROCESSOR–System Components (Cont'd)

8/16 Bit

8086/88 (Cont'd)

Function	Device	Source
Universal DMA Controller, 16-Bit, 6 MHz	AM9516A-6	AMD
Universal DMA Controller, 16-Bit, 8 MHz	AM9516A-8	AMD
Video Interface Controller	82731	Intel
Dual UART	XL88C681	† EXEL
Octal Bus Transceiver, Inverting	8287	AMD
	MBL8287	**Fujitsu** **(1611)**
	82C87	**Harris** **(1619,1622)**
	M8287	† Intel
	M5L8287	Mitsubishi
	μPB8287	NEC
	μPD71087	NEC
	SAB8287	Siemens
Octal Bus Transceiver, Non-Inverting	8286	AMD
	MBL80286-4	**Fujitsu** **(1611)**
	MBL80286-6	**Fujitsu** **(1611)**
	MBL80286-8	**Fujitsu** **(1611)**
	MBL8286	**Fujitsu** **(1611)**
	82C86	**Harris** **(1619,1622)**
	M8286	† Intel
	M5L8286	Mitsubishi
	μPB8286	NEC
	μPD71086	NEC
	SAB8286	Siemens
Octal Latch, Inverting	**MBL8283**	**Fujitsu** **(1611)**
	82C83	**Harris** **(1619,1622)**
	8283	Intel
	M8283	† Intel
	M5L8283	Mitsubishi
	μPB8283	NEC
	μPD71083	NEC
	SAB8283	Siemens
Octal Latch, Non-Inverting	**MBL8282**	**Fujitsu** **(1611)**
	82C82	**Harris** **(682,1619,1622**
	8282	Intel
	M8282	† Intel
	M5L8282	Mitsubishi
	μPB8282	NEC
	μPD71082	NEC
	SAB8282	Siemens
8-Bit I/O Port	CA82C12	Calmos

8088

Function	Device	Source
Microprocessor, 8-Bit	8088	AMD
	8088-1	AMD
	8088-2	AMD
	MBL8088	**Fujitsu** **(1611)**
	MBL8088-2	**Fujitsu** **(1611)**
	80C88	**Harris** **(1618)**
	8088	Intel
	8088-2	Intel
	μPD8088	NEC
	μPD8088-2	NEC
	MSM80C88	**OKI** **(4732)**

9900

Function	Device	Source
Microcomputer ROM-Less	TM9995	TI
Microprocessor	S9900	GouldAMI
	TMS9900	TI
	TMS9900-40	TI
	TMS9980A	TI
	TMS9981	TI
Microprocessor, 16-Bit	TMS99105A	TI
	TMS99110A	TI
Addressable Latch, 8-Bit	SN74LS259B	TI
	TIM9906	TI
Asynchronous Communication Controller (UART) (See also Interface-Serial Transmitters-Receivers)	S9902	GouldAMI
	TMS9902A	TI
Byte Multiplier	SBP9708C	TI
	SBP9708M	† TI
Clock Generator and Driver (4-phase for 9900)	TIM9904	TI
Data Selector/Multiplexer (See also Digital-TTL-Multiplexers 74LS251)	SN74LS251	TI
	TIM9905	TI
FSK Modem	SC11002	Sierra
	SC11003	Sierra
	TMS99532	TI
GPIB Controller	**TMS9914A**	**TI** **(729)**
Memories: See Memory: PROMs, RAMs (Dynamic or Static), and ROMs		
Multi-Processor Interface	TMS99650	TI
Peripheral Interface Adapter	**SBP9965C**	**TI** **(731)**
	SBP9965M	**† TI** **(731)**
Priority Encoder (See also Digital-TTLMiscellaneous, Priority Encoder, 74LS148)	TIM9907	TI
Priority Encoder, 8-Line to 3-Line	SN74LS148	TI
Priority Encoder, 8-Line to 3-Line, Three State	SN74LS348	TI
	TIM9908	TI
Programmable Systems Interface (interrupt prioritization, I/O control and interval timing)	S9901	GouldAMI
	TMS9901	**TI** **(731)**
Pulse DTMF Encoder	TMS99531	TI
Synchronous Communication Controller (bi-sync and SDLC)	TMS9903	TI

16000

Function	Device	Source
Microprocessor, 8-bit and 16-Bit	NS16016	National
Bus Arbiter	NS16204	National
Packet Switching Frame Level Controller	NS16425	National

68000

Function	Device	Source
Dual UART	XL88C681	† EXEL

uCOM-70K

Function	Device	Source
Microprocessor (8-Bit external bus)	μPD70108-5	NEC
	μPD70108-8	NEC
Microprocessor (16-Bit external bus)	μPD70116-5	NEC
	μPD70116-8	NEC

12 Bit

2900

Function	Device	Source
Microprogram Sequencer, 12-Bit	**GE29C10**	**GE Semi** **(4627)**
	IDT39C10B	**IDT** **(1640)**

2900 Controller

Function	Device	Source
Microprogram Controller, 12-Bit	AM2910C	AMD
	AM2910M	† AMD
	CY7C910C	Cypress
	CY7C910M	† Cypress
	29F10C	**Fairchild** **(1028)**
	29F10M	**† Fairchild** **(1028)**
	GP502AD	RCA
	SFC-2910	ThomsonCSF
Microprogram Sequencer, 8-Bit	AM29112	AMD

6100

Function	Device	Source
Bidirectional Bus Driver	HD6432-2	† Harris
Bus Driver	HD6431-2	† Harris
Bus Driver, Octal	HD6434-2	† Harris
	HD6434-9	Harris
Bus Separator/Driver (octal organized as 4 pairs of bus separators)	HD6433-2	† Harris
Universal Asynchronous Receiver-Transmitter (UART) (See also Interface-Serial Transmitters-Receivers)	**HD6402-2**	**† Harris** **(1624)**
	IM6402	**Intersil** **(1645)**
	IM6402-1I	**Intersil** **(1645)**
	IM6402-1M	**† Intersil** **(1645)**
	IM6402AI	**Intersil** **(1645)**
	IM6402AM	**† Intersil** **(1645)**
	IM6403	**Intersil** **(1645)**
	IM6403-1I	**Intersil** **(1645)**
	IM6403AI	**Intersil** **(1645)**
	IM6403AM	**† Intersil** **(1645)**
Hex Buffer/Driver, Three-State	HD6495-2	† Harris
Octal Bus Buffer/Driver	HD6436-2	† Harris
	HD6436-9	Harris
One-of-Eight Decoder/Driver, Latched	HD6440-2	† Harris

16 Bit

2900

Function	Device	Source
Error Detection and Correction	IDT39C60A	IDT
Microprogram Sequencer, 16-Bit	**GE29C10-16**	**GE Semi** **(4627)**
	IDT49C410	**IDT** **(1642)**
Quad 2901 with 64x16 Dual Port Memory Capacity	**IDT49C402**	**IDT** **(1644)**
16-Bit Microprocessor Slice	IDT49C401	IDT

† Military Temperature Range (−55° to 125°C)

* Typical Value

Bold face indicates additional data is provided on the page noted.

MICROPROCESSOR–System Components (Cont'd)

16 Bit

6500

Function	Device	Source	Line
Microprocessor (software compatible with 8-bit 6500 series)	**G65SC802**	**GTEMicro (1617)**	
	G65SC816	GTEMicro	
	W65SC802	WDC	
	W65SC816	WDC	
	W65SC902	WDC	5

8000

Function	Device	Source	Line
Microprocessor, Non-Segmented	Z8002	AMD	
	Z8002A	AMD	
	Z8002A-8	AMD	
	Z8002	SGS	
	Z8002	Zilog	10
	Z8002A	Zilog	
	Z8002B	Zilog	
Microprocessor, Segmented	Z8001	AMD	
	Z8001A	AMD	
	Z8001A-8	AMD	15
	Z8001	SGS	
	Z8000	Zilog	
	Z8001	Zilog	
	Z8001A	Zilog	
	Z8001B	Zilog	20
Microprocessor, Virtual Memory	Z8003	Zilog	
	Z8003A	Zilog	
	Z8003B	Zilog	
	Z8004	Zilog	
	Z8004A	Zilog	25
	Z8004B	Zilog	
Arithmetic Processing Unit	Z8070-Z-APU	Zilog	
Asynchronous Serial Communications Controller	Z8031	AMD	
	Z8031A	AMD	
	Z8031	SGS	30
	Z8031-Z-ASCC	Zilog	
Burst Error Processor	AMZ8065	AMD	
	Z8065-Z-BEP	Zilog	
Clock Generator	AM8127	AMD	
Counter Timer I/O	Z8036	AMD	35
	Z8036A	AMD	
	Z8036-CIO	SGS	
	LH8036	Sharp	
	LH8036A	Sharp	
	Z8036-Z-CIO	Zilog	40
	Z8036A-Z-CIO	Zilog	
CRT Controller	AM8052	AMD	
Data Cyphering Processor	AMZ8068	AMD	
	Z8068-Z-DCP	Zilog	
Direct Memory Access	AMZ8016	AMD	45
	AMZ8016A	AMD	
	Z8016-Z-DTC	Zilog	
First In/First Out Buffer	Z8060-FIFO	SGS	
	LH8060	Sharp	
	LH8060A	Sharp	50
	Z8060-Z-FIFO	**Zilog (1774)**	
First In/First Out I/O	Z8038	AMD	
	Z8038-FIO	SGS	
	LH8038	Sharp	
	LH8038A	Sharp	55
	Z8038-Z-FIO	**Zilog (1776)**	
	Z8038A-FIO	**Zilog (1776)**	
Floppy Disc Controller	FD1793-02	Western	
	FD1797-02	Western	
Intelligent Peripheral Controller	R6500/41	Rockwell	60
	R6500/42	Rockwell	
	R6500/43	Rockwell	
	R6541Q	Rockwell	
	LH8090	Sharp	
	LH8090A	Sharp	65
	Z8090-Z-UPC	Zilog	
	Z8094	Zilog	
Memory Management Unit	Z8010-MMU	SGS	
	LH8010	Sharp	
	LH8010A	Sharp	70
	Z8010-Z-MMU	Zilog	
	Z8010A-Z-MMU	Zilog	
	Z8010B-Z-MMU	Zilog	
Microprocessor, Non-Segmented	LH8002	Sharp	
	LH8002A	Sharp	75
Microprocessor, Segmented	LH8001	Sharp	
	LH8001A	Sharp	
Paged Memory Management Unit Controller	Z8015-Z-PMMU	Zilog	
Serial Input/Output	Z8030	AMD	
	Z8030A	AMD	80
	Z8030-SCC	SGS	
	Z8030-Z-SCC	Zilog	
	Z8030A-Z-SCC	Zilog	
Serial Input/Output Controller	LH8030	Sharp	
	LH8030A	Sharp	85
Timing, Refresh and EDC Controller (16 MHz)	AM8163	AMD	
Universal Peripheral Controller	Z8034-UPC	SGS	
Dual UART	XL68C681	EXEL	
Octal Register	AM8120	AMD	
8-Bit Equal-to Comparator	AM8121	AMD	90

8096

Function	Device	Source	Line
Microcomputer, 232x8 RAM, 10-Bit A/D, IO, 12 MHz	8096	Intel	
Microcomputer, 232x8 RAM, 10-Bit A/D, 8Kx8 ROM, I/O, 12 MHz	8396	Intel	

9440

Function	Device	Source	Line
Microprocessor	F9440M	† Fairchild	
	F944516	† Fairchild	
	F944518	† Fairchild	95
	F944520	† Fairchild	
	F944524	† Fairchild	

9450

Function	Device	Source	Line
Block Protect Unit	**F9452**	**† Fairchild (1608)**	
Memory Management Unit	**F9451**	**† Fairchild (1608)**	

16000

Function	Device	Source	Line
Microprocessor	F16032	Fairchild	100
	NS16032-6	National	
Floating-Point Slave Processor	NS16081	National	
Interrupt Control Unit	NS16201-6	National	
	NS16202	National	
Memory Management Unit	NS16082	National	105
Timing Control Unit	NS16201	National	

65C8XX

Function	Device	Source	Line
Microprocessor (Software compatible with the 6500)	W65C802	WDC	
	W65C816	WDC	

68000

6800 devices are suitable for the 68000

Function	Device	Source	Line
Microprocessor	HD68000	Hitachi	110
	HD68000-10	Hitachi	
	HD68000-12	Hitachi	
	HD68000-4	Hitachi	
	HD68000-6	Hitachi	
	HD68000-8	Hitachi	115
	MK68000-10	**Mostek (1647)**	
	MK68000-4	**Mostek (1647)**	
	MK68000-6	**Mostek (1647)**	
	MK68000-8	**Mostek (1647)**	
	MKB68000	† Mostek	120
	MC68000-10	**Motorola (1654,1905,2109)**	
	MC68000-12	**Motorola (1654,1905,2109)**	
	MC68000-8	**Motorola (1654,1905,2109)**	
	R68000	Rockwell	
	SCN68000	**Signetics (1720)**	125
	EF68000	ThomsonCSF	
	EF68000-10	ThomsonCSF	
	EF68000-12	ThomsonCSF	
	EF68000-8	ThomsonCSF	
Microprocessor 8-Bit (bus interface version of MC68000)	**MC68008**	**Motorola (1654)**	130
	SCN68008	Signetics	
	EF68008	ThomsonCSF	
Microprocessor 16-Bit (virtual machine version of MC68000)	**MC68010**	**Motorola (1654,1905,2109)**	
	SCN68010	**Signetics (1721)**	
Broadband Interface Controller (IEEE 802.4 Broadband Physical Layer)	**MC68184**	**Motorola (1658)**	135
Bus Arbitration Module	**MC68452**	**Motorola (1656)**	
Bus Interrupter Module	MC68153	Motorola	
Bus Monitor	MD68SC49A	Mitel	
	MD68SC49B	Mitel	
Carrierband Modem (IEEE 802.4 Phase Coherent Physical Layer)	**MC68194**	**Motorola (1658)**	140

† Military Temperature Range (−55° to 125°C)

* Typical Value

Bold face indicates additional data is provided on the page noted.

MICROPROCESSOR–System Components (Cont'd)

16 Bit

68000 (Cont'd)

Function	Device	Source	Line
Communications, Dual Asynchronous Communications Interface Adapter (DACIA)	R68C552	Rockwell	
Communications, Multi-protocol Communications Controller	MC2652	Motorola	
	MC68652	**Motorola** (1657)	
Communications, Programmable Communications Interface	MC2661	Motorola	
	MC68661	**Motorola** (1657)	5
Communications, Dual Universal Serial Communications Controller	**MC68562**	**Motorola** (1657)	
	SCN68562	**Signetics** (1728)	
CRT, Raster Memory System, 2-device set (RMI/RMC)	**MC68486**	**Motorola** (1661)	
	MC68487	**Motorola** (1661)	
Disk, Intelligent Multiple Disk Controller	**MC68454**	**Motorola** (1657)	10
	SCN68454	**Signetics** (1724)	
Disk, Phase Locked Loop	**SCB68459**	**Signetics** (1726)	
Display Processor	EF68483	ThomsonCSF	
DMA Controller	HD68450-10	Hitachi	
	HD68450-4	Hitachi	15
	HD68450-6	Hitachi	
	HD68450-8	Hitachi	
	MC68450	**Motorola** (1656)	
	SCB68430	**Signetics** (1722)	
DMA Controller, Extended Address	MC68442	Motorola	20
DMA Controller, Dual	**MC68440**	**Motorola** (1656)	
	SCN68440	Signetics	
	EF68440	ThomsonCSF	
Dynamic RAM Controller Interface Circuit	DP84312	National	
	DP84322	National	25
Error Detection and Correction Circuit	**MC74F2960**	**Motorola** (1132)	
Ethernet, Local Area Network Controller	MK68540	Mostek	
Ethernet, Local Area Network Controller (LANCE)	**MC68590**	**Motorola** (1657)	
FIFO	MK68345	Mostek	
FIFO, 512x9	MK68345-12	Mostek	30
	MK68345-15	Mostek	
	MK68345-20	Mostek	
Floppy Disk Controller, Double Density (DDFDC)	R68465	Rockwell	
Intelligent Peripheral Controller	**MC68120**	**Motorola** (1656,1663)	
	MC68121	**Motorola** (1656,1663)	35
Local Area Network Controller for Ethernet	**MK68590**	**Mostek** (3611)	
Memory Access Controller	**SCC68905**	**Signetics** (1732)	
Memory Access Controller, Basic	**SCC68906**	**Signetics** (1740)	
Memory Management Unit	**MK68451**	**Mostek** (1651)	
	MC68451	**Motorola** (1656)	40
	SCN68451	Signetics	
Microprocessor	**MK68200**	**Mostek** (1650)	
	EF68000-16	ThomsonCSF	
Multi-Function Peripheral	**MK68901**	**Mostek** (1653)	
	MC68901	**Motorola** (1656)	45
	EF68901	ThomsonCSF	
Occam Programming System	Occam	Inmos	
Parallel Interface/Timer	**MK68230-10**	**Mostek** (1649)	
	MK68230-8	**Mostek** (1649)	
	MC68230-12	**Motorola** (1656)	50
	MC68230L10	**Motorola** (1656)	
	MC68230L8	**Motorola** (1656)	
	SCN68230	Signetics	
	EF68230-10	ThomsonCSF	
	EF68230-8	ThomsonCSF	55
Polynomial Generator Checker	MC2653	Motorola	
	MC68653	**Motorola** (1657)	
Serial Input Output	**MK68564**	**Mostek** (1652)	
	EF68564	ThomsonCSF	
Token Bus Controller (IEEE 802.4 Media Access Control sublayer)	**MC68824**	**Motorola** (1658)	60
Video Display Generator	**MC6847**	**Motorola** (1661)	
	MC6847Y	**Motorola** (1661)	
VMEbus Controller (BUSCON)	**SCB68172**	**Signetics** (1748)	
Single-Step Circuit (allows step-by-step interruption of sequential programming steps)	SSC680	AWI	
Dual UART	XL68C681	EXEL	65
	MC68601	Motorola	
	MC68681	**Motorola** (1657)	
	SCN68681C	**Signetics** (1730)	

80286

Function	Device	Source	Line
Microprocessor, 16-Bit	80286-1	AMD	
	80286-6	AMD	70
	80286-8	AMD	

Transputer

Function	Device	Source	Line
Microprocessor with External Memory Interface	T212	Inmos	
Link Adaptor, Bidirectional Handshaken byte-Wide Interface, 10 Mb/s	**IMSC002**	**Inmos** (1637)	
Occam Programming System	Occam	Inmos	

SBP9989

Function	Device	Source	Line
Microprocessor	**SBP9989**	**† TI** (731)	75
Interrupt Control Circuit	**SBP9966**	**† TI** (731)	
Peripheral Interface Adaptor	**SBP9965**	**† TI** (731)	
Programmable System Interface	SPB9901	† TI	

Z8000

Function	Device	Source	Line
Bus Monitor	MD68SC49B	Mitel	

16/32 Bit

11

Function	Device	Source	Line
Microprocessor (PDP-11)	DCT11-AA	DEC	80

16000

Function	Device	Source	Line
Microprocessor	NS16016	National	
Microprocessor, 8-Bit	NS08032	National	
	NS16008	National	
Microprocessor, 8-Bit version	NS16008	National	
Microprocessor, 16-Bit	NS16032	National	85
	NS16C032	National	
Microprocessor, 32-Bit	F32032	Fairchild	
	NS32032	National	
	NS32C032	National	
	NS32C132	National	90
	NS32C32	National	
Bus Arbiter	NS16204	National	
CRT Controller	NS16413	National	
	NS16413	National	
DMA Controller	NS16203	National	95
GPIB Controller	NS16488	National	
LAN Coax Receiver Interface	DP8392	National	
Multiple Protocol Communications Controller	NS16456	National	
Packet Switching Frame Level Controller	NS16425	National	
Terminal Management Processor	NS16455	National	100

32000

Function	Device	Source	Line
Floating Point Unit	TI32081	TI	
Interrupt Control Unit	TI32202	TI	
Memory Management Unit	TI32082	TI	
Microprocessor, 8-Bit	TI32008	TI	
Microprocessor, 16-Bit	TI32016	TI	105
Microprocessor, 32-Bit	TI32032	TI	
Timing Control Unit	TI32201	TI	

32 Bit

32

Function	Device	Source	Line
Address Translation Chip, Memory Management	NCR/32-010	NCR	
Extended Arithmetic Chip	NCR/32-020	NCR	
System Interface Controller, LAN, CSMA/CD Arbitration or Token Passing	NCR/32-500	NCR	110
System Interface Receiver	NCR/32-590	NCR	
System Interface Transmitter	NCR/32-580	NCR	

† Military Temperature Range (−55° to 125°C)

* Typical Value

Bold face indicates additional data is provided on the page noted.

MICROPROCESSOR–System Components (Cont'd)

32 Bit

32100

Function	Device	Source
Microprocessor	UNIX	AT&T
	WE32100	**AT&T** (1602)
Clock	**WE32102**	**AT&T** (1602)
DMA Controller	**WE32104**	**AT&T** (1602)
DRAM Controller	**WE32103**	**AT&T** (1602)
Math Acceleration Unit	**WE32106**	**AT&T** (1603)
Memory Management Unit	**WE32101**	**AT&T** (1602)

68000

Function	Device	Source
Microprocessor, 32-Bit. See 16-Bit series for additional system components.	**MC68020**	**Motorola** (1654,1905,2109,211[illegible])
	32C032	National
Floating-Point Co-processor	**MC68881**	**Motorola** (1654)
Paged Memory Management Unit	MC68851	Motorola

80000

Function	Device	Source
Microprocessor	Z80000	Zilog
Arithmetic Processing Unit	Z8070-Z-APU	Zilog

82286

Function	Device	Source
Data Bus Buffer and Parity Generator, for PC/AT	**82A205**	**Chips&Tech** (1604)
High Address Bus Buffer and Port, for PC/AT	**82A203**	**Chips&Tech** (1604)
Low Address Bus Buffer and Refresh Counter, for PC/AT	**82A204**	**Chips&Tech** (1604)
RAM/ROM Decode, I/O Control, for PC/AT	**82C202**	**Chips&Tech** (1604)
System Control Chip, for PC/AT	**82C201**	**Chips&Tech** (1604)

Transputer

Function	Device	Source
Microprocessor with communication links, 2 Kbytes RAM, Memory and Peripheral Interfaces	T414	Inmos
Link Adaptor, Bidirectional Handshaken byte-Wide Interface, 10 Mb/s	**IMSC002**	**Inmos** (1637)
Link Adaptor, Two Handshaken Byte-Wide Interfaces, 10 Mb/s	**IMSC001**	**Inmos** (1637)
Processor, Memory, Communications.	Transputer	Inmos

Peripheral Controllers

Function	Device	Source
Arithmetic Processor, Floating Point	**MSM6992**	**OKI** (4733)
Asynchronous Communications Controller	**SCN2641**	**Signetics** (1682)
Asynchronous Communications Interface Adapter with Internal Baud-Rate Generator	**S65C51**	**GouldAMI** (1613)
Asynchronous Receiver/Transmitter	DC319-AA	DEC
Asynchronous Serial Communications Controller	Z8531	AMD
	Z8031-Z-ASCC	Zilog
	Z8531-ASCC	Zilog
Bubble Memory Controller	7220	Intel
	TMS9923	TI
Bus Arbitration Module	**MC68452**	**Motorola** (1656)
Bus Extender/Repeater	**N8X41**	**Signetics** (1193)
Color/Monochrome Attributes Controller	**SCB2675**	**Signetics** (1698,1706)
Communication Interface Programmable	AY2661A	GI
	AY2661B	GI
	AY2661C	GI
	SCN2661A	**Signetics** (1690)
	SCN2661B	**Signetics** (1690)
	SCN2661C	**Signetics** (1690)
Communications Circuit Multi-Protocol (includes SDLC, BiSync)	**SCN2652A**	**Signetics** (1686)
Communications, Enhanced Programmable Communications Interface (EPCI)	MC2661A	Motorola
	MC2661B	Motorola
	MC2661C	Motorola
	MC68661A	**Motorola** (1657)
	MC68661B	**Motorola** (1657)
	MC68661C	**Motorola** (1657)
	VL2661	**VTI** (1751,1752,1761)
Contrôller Programmable	AM9519A	AMD
	CY750	Cybernetic
Counter/Timer, Parallel I/O	Z8536	AMD
	Z8536A	AMD
	Z8536-CIO	**Zilog** (1775)
	Z8536A-CIO	**Zilog** (1775)
CPV Controller, IBM-PC Compatible	FE2000	Faraday
CRT, Advanced Video Display Controller	**MC2674**	**Motorola** (1661)
	SCN2674	**Signetics** (1704)
CRT, Color Graphics Controller (and Memory Interface Controller)	**NCR7300**	**NCR** (1672)
	NCR7301	**NCR** (1672)
CRT, Color Lookup Table (RGB video DAC and 16x12 RAM)	BT452	Brooktree
CRT, Color Lookup Table (RGB video DAC and 256x18 RAM)	**IMSG170-20**	**Inmos** (3195)
	IMSG170-35	**Inmos** (3195)
	IMSG170-50	**Inmos** (3195)
CRT, Color/Monochrome Attributes Controller	**MC2675**	**Motorola** (1662)
	SCB2675	**Signetics** (1698,1706)
CRT, Color/Monochrome Attributes Controller (IBM Compatible)	**82C433**	**Chips&Tech** (1605)
CRT, Color Video Display Generator, Videotex and Teletext. See also Telecommunications Circuits.	R6549	Rockwell
CRT Controller	S6845E	GouldAMI
	MC6845	**Motorola** (1661)
	TMS34061	TI
	VL6845E	**VTI** (1751,1752,1759)
	VL6845R	**VTI** (1751,1752,1759)
	VL68C45R	**VTI** (1751,1752,1759)
	VL68C45S	**VTI** (1751,1752,1759)
	WD8276	Western
CRT Controller, Advanced	**HD63484**	**Hitachi** (1633)
CRT Controller (IBM compatible)	**82C434**	**Chips&Tech** (1605)
CRT Controller, Mask-Programmable, Internal Dotclock, Cursor, and Row Start Address Registers, 50/60 Hz Refresh Rate	DP8350	National
CRT Controller, Small System	8276	Intel
CRT Data Row Buffer	CRT9006-135	SMC
	CRT9006-83	SMC
CRT, Display Refresh Controller	AM8150C	AMD
CRT, Graphic Display Processor	EF9365	ThomsonCSF
	EF9366	ThomsonCSF
	EF9367	ThomsonCSF
CRT, Graphics Color Palette (video DAC and 256x8 color map)	AM8151C	AMD
CRT Graphics Controller	µPD7220A	NEC
	µPD7220A-1	NEC
	µPD7220A-2	NEC
CRT, Graphics Controller (IBM compatible)	**82C431**	**Chips&Tech** (1605)
CRT, Graphics Display Controller	82720	Intel
	µPD7220A	NEC
	CRT7220	SMC
	CRT7220-1	SMC
	CRT7220-2	SMC
CRT, Graphics Display Processor (Color BIT/BLT) Universal Pixel Engine (concept spec)	CL-TUPE100	Cirrus
CRT, Monochrome Attributes Controller, IBM-PC Compatible	FE2200	Faraday
CRT Processor	EF9364	ThomsonCSF
CRT, Programmable CRT Controller	8275	Intel
	WD8275	Western
CRT, Programmable Video Timing Controller	**SCN2672A**	**Signetics** (1700)
CRT, Raster Memory System, 2-device set (RMI/RMC)	**MC68486**	**Motorola** (1661)
	MC68487	**Motorola** (1661)
CRT, Raster Operations Device	**VL16160**	**VTI** (1751,1752,1758)
CRT (RGB video DAC)	BT101	Brooktree
	BT102	Brooktree
	BT103	Brooktree
	BT444	Brooktree

(Continued)

† Military Temperature Range (−55° to 125°C)

* Typical Value

Bold face indicates additional data is provided on the page noted.

MICROPROCESSOR–System Components (Cont'd)

Peripheral Controllers (Cont'd)

Function	Device	Source	Line
CRT (RGB video DAC) (Cont'd)			
	HDAC34010	**HoneywellSPT (3680)**	
	HDAC34020	**HoneywellSPT (3681)**	
CRT (RGB video DAC and 16x12 RAM)	BT450	Brooktree	
CRT (RGB video DAC and 256x2 RAM)	BT451	Brooktree	
CRT (RGB video DAC and 256x24 RAM)	BT453	Brooktree	5
	BT458	Brooktree	
CRT, Sequencer (IBM compatible)	**82C432**	**Chips&Tech (1605)**	
CRT Terminal Controller	NS455	National	
CRT Text Coprocessor	82730	Intel	
CRT, TV-CRT Processor; Performs Text Refresh, Character Writing and Cursor Management on TV Screen; 1.6 MHz Clock Rate (typ.)	SFF96364	ThomsonCSF	10
CRT, TV-CRT Processor; 96364 with External Sync	SFF96366	ThomsonCSF	
CRT, Video Attributes Controller	**MC2673**	**Motorola (1662)**	
	SCB2673A	**Signetics (1702)**	
	SCB2673B	**Signetics (1702)**	
	SCB2677A	**Signetics (1708)**	15
	SCB2677B	**Signetics (1708)**	
	CRT9041A	SMC	
	CRT9041B	SMC	
	CRT9041C	SMC	
	UM8321	UMC	20
CRT Video Attributes Controller (graphic logic, attributes logic, data and attributes latches, cusor control and shift register)	CRT9021B	SMC	
CRT Video Attributes Controller/Video Generator (video shift register, horizontal and vertical retrace blanking, graphics generation, attributes buffer)	CRT8021	SMC	
	CRT8021-003	SMC	
CRT, Video Character Generator	HS3819	Harris	
CRT, Video Data Serializer	AM8177	AMD	25
CRT, Video Diaplsy Processor	TMS9118	TI	
	TMS9128	TI	
	TMS9129	TI	
CRT, Video Display Generator, Reads Data from Memory to Produce Composite Video Signal, Internal Display Memory Mux	**MC6847**	**Motorola (1661)**	
CRT Video Display-Controller Video Generator	SND8002	SSS	30
	CRT8002	SMC	
CRT, Video Interface Controller	82731	Intel	
CRT, Video Palette (color lookup table and video DAC)	TMS34070	TI	
CRT, Video Processor and Controller	CRT9007A	SMC	
	CRT9007B	SMC	35
	CRT9007C	SMC	
CRT, Video RGB DAC	RGBDAC4T	Intech	
	RGBDAC8E	Intech	
	RGBDAC8T	Intech	
	VDAC444	Intech	40
CRT, Video Shift Register	AM8157	AMD	
CRT, Video System Controller	TMS34061	TI	
CRT, Video System Controller (See 8052 CRT Controller)	AM8152AC	AMD	
	AM8152AM	† AMD	
CRT, Video Terminal Logic Controller	CRT9028	SMC	45
	CRT9053	SMC	
	CRT9128	SMC	
	CRT9153	SMC	
CRT Video Timer-Controller	SND5027	SSS	
	SND5037	SSS	50
	CRT5027	SMC	
CRT Video Timer-Controller, Line Lock Feature	CRT5057	SMC	
CRT Video Timer-Controller, Preprogrammed	CRT5047	SMC	
CRT Video Timer-Controller, ROM Programmed	CRT5037	SMC	
CRT, Video Timing Controller	AM8158C	AMD	55
CRT, Video Timing Controller, Programmable	**MC2672**	**Motorola (1662)**	
CRT, 3 Gun Color Palette	AM8159	AMD	
Data Bit Processor	**CT1555**	**† CTI (601)**	
	CT1608	**† CTI (601)**	
Devices in this category are intended for use with any microprocessor			60
Direct Memory Access Controller	μPD71071	NEC	
Disk Buffer Management Unit	HDC9225	SMC	
Disk Drive VFO	HA16632A	Hitachi	
Disk, Hard Disk Controller	HD63463	Hitachi	
	μPD7261AH	NEC	65
Display Character and Graphics Generator	**MC2670**	**Motorola (1662)**	
	SCN2670A	Signetics	
	SCN2670B	Signetics	
Display Controller (Dot), LED and Keyboard Interface	MTX-A1	Matrox	
Display Controller (Segment), Keyboard Interface	MTX-B1	Matrox	70
Display Controller, 4-Character Alphanumeric	MM74C956	National	
Display Controller, 14 to 18 Segment Vacuum Flourescent Displays (16 characters)	10937	Rockwell	
Display, LCD/Console Controller for Alphanumeric 5x7 Dot Matrix Display	CY300	Cybernetic	
DMA, Direct Memory Access Controller	AM9517A	AMD	
DMA Direct Memory Access Controller	AM9517A-1	AMD	75
	AM9517A-4	AMD	
DMA, Programmable DMA Controller	8237	Intel	
	8257	Intel	
	μPD71057	NEC	
	VL8237A	VTI	80
DMA Transfer Controller	Z8516	Zilog	
DMA, Dual Direct Memory Access Controller	SCN68440	Signetics	
	EF68440	ThomsonCSF	
Dot Matrix LCD Controller/Driver, Intelligent	μPD7227	NEC	
	μPD7228	NEC	85
Double Row Buffer (RAM-based buffer that appears to the system as two octal shift registers of dynamically variable length)	CRT9212	SMC	
Driver/Receiver for Disk Head Amplifier	MB4316	Fujitsu	
Enhanced Programmable Communications Interface	**IM26C61**	**Intersil (1645)**	
Enhanced Programmable Communications Interface (EPCI)	**SCN68661B**	**Signetics (1690)**	
	SCN68661C	**Signetics (1690)**	90
	SCN8661A	Signetics	
Enhanced Programmable Communications Interface with On-Board Crystal Oscillator	**IM26C62**	**Intersil (1645)**	
Enhanced Sound Generator	AY8930	GI	
	AY8931	GI	
Ethernet Data Link Controller	AM7990	AMD	95
	MB8795A	**Fujitsu (1611)**	
	8003	SEEQ	
Ethernet, Local Area Network Controller (LANCE)	AM7990	AMD	
	MK68590	**Mostek (3611)**	
	MC68590	**Motorola (1657)**	100
Ethernet, Manchester Code Converter	8023A	SEEQ	
Ethernet, Serial Interface Adapter (Ethernet Controller Interface)	MK68591	Mostek	
Ethernet Serial Interface Adapter (SIA)	AM7991A	AMD	
Ethernet, Serial Interface Adaptor, 802.3 compatible	AM7992A	AMD	
Ethernet Transceiver	AM7995	AMD	105
Floppy Disc Controller/Formatter (single and double density)	**MB89311**	**Fujitsu (1611)**	
	VL1770	**VTI (1751,1752,1766)**	
	WD1770	Western	
Floppy Disc Controller/Transmitter (IBM 3740 compatible)	**MB8876A**	**Fujitsu (1611)**	
	MB8877A	**Fujitsu (1611)**	110
Floppy Disc Read Amplifier System	CS3470A	Cherry	
Floppy Disc Write Control	CS3471	Cherry	
Floppy Disk Controller	HA16643	Hitachi	
	MSM6291	**OKI (4733)**	
Floppy Disk Controller, Data Separator	**MSM6281**	**OKI (4733)**	115
Floppy Disk Controller, Double Density (DDFDC)	R68465	Rockwell	

† Military Temperature Range (−55° to 125°C)

* Typical Value

Bold face indicates additional data is provided on the page noted.

MICROPROCESSOR–System Components (Cont'd)

Peripheral Controllers (Cont'd)

Function	Device	Source
Floppy Disk Controller for Sony format	μPD7265	NEC
	R6265	Rockwell
Floppy Disk Controller/Formatter (IBM 3740 and System 34)	FDC9791	SMC
	FDC9793	SMC
	FDC9795	SMC
	FDC9797	SMC
Floppy Disk Controller/Formatter (single and double density)	M5W1791-02	Mitsubishi
	SAB179X	Siemens
	FDC1791	SMC
	FDC1792	SMC
	FDC1793	SMC
	FDC1794	SMC
	FDC1795	SMC
	FDC1797	SMC
	VL1772	**VTI (1751,1752,1776)**
	FD1771-01	Western
	FD1791-02	Western
	FD1793-02	Western
	FD1795-02	Western
	FD1797-02	Western
	WD1772	Western
	WD1773	Western
	WD2771	Western
	WD2773	Western
	WD2775	Western
	WD2777	Western
	WD2791-02	Western
Floppy Disk Controller, Head Driver	MC3469	Motorola
	MC3471	Motorola
Floppy Disk Controller, IBM-PC Compatible	FE2100	Faraday
Floppy Disk Controller/Interface (single and double density)	FDC9266	SMC
Floppy Disk Controller, Programmable	8271	Intel
Floppy Disk Controller, Single/Double Density	μPD72065	NEC
Floppy Disk Controller/Transmitter (IBM 3740 compatible)	MB8866	Fujitsu
	INS1771	National
	μPD765A	NEC
	SAB1791-02	Siemens
	SSI440	SiliconSys
Floppy Disk Controller/Transmitter, Single Chip	TMS2791	TI
	TMS2793	TI
	TMS2795	TI
	TMS2797	TI
	VL2773	VTI
	VL2777	VTI
	VL2791	VTI
	VL2793	**VTI (1751,1752,1756)**
	VL2797	**VTI (1751,1752,1756)**
	VL37C73	VTI
	VL37C77	VTI
	WD2791	Western
	WD2793-02	Western
	WD2795-02	Western
	WD2797-02	Western
Floppy Disk Controller, Single/Double Density	8272A	Intel
	μPD765A	NEC
	R6765	Rockwell
	FDC765A	SMC
	UM8272A	UMC
	VL6765	**VTI (1751,1752,1760)**
	VL67C65	VTI
	Z765A	Zilog
Floppy Disk Controller, Two-Sided	μPD765A	NEC
Floppy Disk Data Separator	**MB4107**	**Fujitsu (1611)**
	SED9420D	S-MOS
	SSI441	**SiliconSys (3736)**
	FDC9216	SMC
	FDC9216B	SMC
	UM8326	UMC
	UM8326B	UMC
	WD9216-00	Western
	WD9216-01	Western
Floppy Disk Drive, 2-Channel	**SSI570**	**SiliconSys (3736)**
Floppy Disk Drive, 4-Channel	**SSI575**	**SiliconSys (3736)**
Floppy Disk Interface Circuit	μPB9201	NEC
	FDC9229	SMC
	FDC9229B	SMC
	FDC9239	SMC
	UM8329	UMC
	UM8329B	UMC
Floppy Disk Read Amplifier	HA16631	Hitachi
Floppy Disk Read/Write Amplifier	HA16642	Hitachi
Floppy Disk Read/Write Circuit	**XR3448**	**Exar (3551)**
Floppy Disk Read/Write Circuit, 2-Channel	CA570	RCA
Floppy Disk Read/Write Circuit, 4-Channel	CA575	RCA
Floppy Disk Support Circuit (port expansion for 8048)	**SSI580**	**SiliconSys (3736)**
Floppy Disk Write Amplifier	**XR3471**	**Exar (3551)**
Floppy Disk Write and Mechanism Controller	HA16640	Hitachi
Floppy Disk-Programmable Formatter/Controllers	INS82891	National
	INS82893	National
Floppy/Hard Disk Controller	μPD7260	NEC
Floppy Support Logic	WD1691	Western
Function Generator, Peripheral Controller	CY360	Cybernetic
GPIB Controller	8292	Intel
	WD9914	Western
GPIB, General Purpose Interface Adapter (IEEE 488 bus)	96LS488DC	Fairchild
	96LS488DM	† Fairchild
	HEF4738	Signetics
GPIB Interface Controller, Intelligent	COM7210	SMC
GPIB Talker/Listener/Control	F681488	Fairchild
GPIB Talker/Listener Interface	8291A	Intel
GPIB Transceiver	8293	Intel
Graphic Display Processor	EF9345	ThomsonCSF
Hard Disk Data Separator	DP8460	National
Hard Disk Interface Circuit	μPD9306	NEC
Hard Disk Pulse Detector	DP8464	National
Interpolation, Pulse Generator	KM3701	Toko
Interrupt Controller Programmable	8259A-2	Intel
	8259A-5	Intel
Interval Timer, Programmable, High Performance	μPD71054	NEC
Keyboard and Communications Controller Programmable	**MC2671**	**Motorola (1662)**
	SCN2671A	Signetics
Keyboard/Display Interface	8279	Intel
LCD Alphanumeric Controller/Driver. See also Interface-Display Drivers	μPD7225	NEC
Local Area Network Coax Receiver Interface	DP8392	National
Local Area Network Communications, Ethernet Serial Interface	82501	Intel
	82586	Intel
Local Area Network Controller	R68802	Rockwell
	COM9026	SMC
Local Area Network Transceiver	COM9032	SMC
Local Network Token Access Controller	WD2840	Western
Manchester Encoder/Decoder	**MB502**	**Fujitsu (1611)**
	HS15530RH	**Harris (676,682)**
	MEDM-2010	Technitrol
	MEDM-2020	Technitrol
	MEDM-2050	Technitrol
	MEDM-2100	Technitrol
	MEDM-2200	Technitrol
MAP Broadband Interface Controller (IEEE 802.4 Broadband Physical Layer)	**MC68184**	**Motorola (1658)**
MAP Carrierband Modem (IEEE 802.4 Phase Coherent Physical Layer)	**MC68194**	**Motorola (1658)**
MAP Token Bus Controller (IEEE 802.4 Media Access Control sublayer)	**MC68824**	**Motorola (1658)**
Microfloppy Disc Controller for Sony Format	FDC7265	SMC
Microprogram Controller	IDM2910A	National
MIL-STD-1555 Interface Circuit	**CT1611**	**† CTI (601)**
Motion Control/Buffer Manager and Read Write Formatter (WD2400 Chip Set)	WD2401	Western
	WD24C02	Western
Motor, Intelligent Stepper Motor Controller	CY500	Cybernetic
	CY512	Cybernetic

† Military Temperature Range (−55° to 125°C)

* Typical Value

Bold face indicates additional data is provided on the page noted.

MICROPROCESSOR–System Components (Cont'd)

Peripheral Controllers (Cont'd)

Function	Device	Source	Line
Multi-Protocol Communications Controller			
	R65560	Rockwell	
	R67560	Rockwell	
	R68561	Rockwell	
Multi-Protocol Serial Controller			
	Z8530A	AMD	
Multi-System Control Chip. Interfaces any two CYxxx Devices to a Computer, Keyboard or RS232 Terminal			
	CY250	Cybernetic	5
Parallel to Serial Interface			
	CY232	Cybernetic	
Peripheral, Programmable Peripheral Interface			
	8255A	Intel	
Polynomial Generator Checker			
	SCN2653A	**Signetics (1688)**	
Printer Controller, for 5x7 Dot Matrix Printer			
	CY480	Cybernetic	
Printer, Dot Matrix Printer Controller			
	8295	Intel	10
Programmable Communication Interface			
	AM95C85	AMD	
Programmable Sound Generator			
	AY3-8913	GI	
Protocol Controller, X.25 (supports 8/16-bit data bus)			
	T7101	AT&T	
Protocol Controller, X.25 (supports 8-bit data bus)			
	T7100	AT&T	
Protocol Controller, X.25/X.75 (supports 8/16-bit data bus)			
	T7102	AT&T	15
Protocol Data Formatter, Synchronous with Serial Interface	T7110	AT&T	
Protocol Processor, MIL-STD-1553			
	CT1560	**† CTI (601)**	
	CT1561	**† CTI (601)**	
	CT1562	**† CTI (601)**	
	CT1563	**† CTI (601)**	20
	CT1601	**† CTI (601)**	
	CT1602	**† CTI (601)**	
	CT1603	**† CTI (601)**	
	CT1604	**† CTI (601)**	
	CT1605	**† CTI (601)**	25
	CT1606	**† CTI (601)**	
	CT1610	**† CTI (601)**	
	CT1612	**† CTI (601)**	
	CT1615	**† CTI (601)**	
	CT1617	**† CTI (601)**	30
Real-Time Clock			
	MM58167A	National	
	MM58174A	National	
	RP5C01	**Panatech (4133)**	
	RP5C15	**Panatech (4133)**	
Real-Time Clock Interface (allows time of day info to be retrieved over µP bus)			
	HI8000	Holt	35
Real-Time Clock/µP Interface			
	MSM5832	OKI	
	L5832	SGS	
Real-Time Clock with Independent Counter/Timer			
	HI8024	Holt	
SCSI Protocol Controller, Small Computer Systems Interface	**NCR5380**	**NCR (3214)**	
	NCR5385	NCR	40
SCSI Protocol Controller, Small Computer Systems Interface, Differential Pair Operation			
	NCR5381	NCR	

Function	Device	Source	Line
Serial Controller Multi-Protocol			
	Z8530	AMD	
	Z8530-SCC	**Zilog (1775)**	
Serial Timer Interrupt Controller			
	MK3801-6	Mostek	
Servomechanism			
	KM3702	Toko	45
Shaft Encoder Peripheral Interface			
	XSE501	IXYS	
Small Computer System Interface			
	5380	AMD	
	AM9582	AMD	
SMD Controller/Formatter			
	WD1050	Western	
Sound Generator			
	AY3-8910A	GI	50
	AY3-8912A	GI	
	SN76477	TI	
String Proximity Computer and Ranker			
	PF474	Proximity	
Synchronous Data Link Controller			
	VL1935	**VTI (1751,1752,1757)**	
System Clock Generator			
	µPD71011	NEC	55
Tape Drive Clock Synchronizer			
	VT210	**VTC (3270)**	
Tape Drive Magnetic Write Driver			
	VT211	**VTC (3270)**	
TV Display Controller			
	MB88303	**Fujitsu (1611)**	
Universal Peripheral Controller			
	R6500/41	Rockwell	
	R6500/42	Rockwell	60
	R6500/43	Rockwell	
	R6541Q	Rockwell	
	Z8094	Zilog	
	Z8590-UPC	Zilog	
	Z8594-UPC	**Zilog (1776)**	65
Universal Peripheral Interface, I/O Expander			
	8243	Intel	
Universal Peripheral Interface, 1K EPROM			
	8741A	Intel	
Universal Peripheral Interface, 1K ROM			
	8041AH	Intel	
Universal Peripheral Interface, 2K EPROM			
	8742	Intel	
Universal Peripheral Interface, 2K ROM			
	8042	Intel	70
Universal Peripheral Interface, 4K EPROM			
	8744	Intel	
Universal Peripheral Interface, 4K ROM			
	8044	Intel	
Video Terminal Logic Controller			
	AY9028	GI	
	AY9128	GI	
Videotext CRT Display Processor			
	EF9340	ThomsonCSF	75
	EF9341	ThomsonCSF	
Videotext, Error Correction			
	MSM6254	**OKI (4733)**	
VMEbus, Bus Controller			
	SCB68175	**Signetics (1738)**	
VMEbus, Interrupt Controller			
	SCB68155	**Signetics (1736)**	
VMEbus, Interrupt Generator			
	SCB68154	**Signetics (1734)**	80
Winchester, Buffer Manager Control Processor (used with WD1014)	WD1015	Western	

Function	Device	Source	Line
Winchester Controller/Formatter			
	82062	Intel	
	WD1010	Western	
Winchester Data Separator			
	HDC9226	SMC	
	WD1100-13	Western	85
Winchester Disc Memory Head Read/Write Circuit, for thin film heads	**SSI114**	**SiliconSys (3736)**	
Winchester Disc Memory Read/Write Circuit			
	SSI104	**SiliconSys (3736)**	
Winchester Disc Memory Video Amplifier, for Magnetic Servo Head	**SSI101A**	**SiliconSys (3736)**	
Winchester Disc Memory Video Amplifier, for Thin Film Magnetic Heads			
	SSI116	**SiliconSys (3736)**	
Winchester Disk Address Mark Detector			
	HDC1100-03	SMC	90
Winchester Disk Buffer Manager Support Device			
	WD1100-21	Western	
Winchester Disk Controller			
	HDC7261	SMC	
	HDC9224	SMC	
Winchester Disk Controller Board			
	WD1002-SHD	Western	
Winchester Disk Controller Chip Set			
	WD1000	Western	95
	WD1100	Western	
Winchester Disk Controller/Formatter			
	WD2010	Western	
Winchester Disk CRC Checker/Generator			
	HDC1100-04	SMC	
Winchester Disk Data Separator/Encoder, MFM or 2, 7			
	µA2490	Fairchild	
	µA2491	Fairchild	100
	µA2492	Fairchild	
Winchester Disk Data Separator (self-adjusting)			
	WD10C20	Western	
Winchester Disk Head Actuator Control Circuit			
	µA2460	Fairchild	
	µA2461	Fairchild	
Winchester Disk Improved MFM Generator			
	HDC1100-12	SMC	105
Winchester Disk Memory Read/Write Circuit			
	MB4111	Fujitsu	
	MB4112	Fujitsu	
	SSI105	SiliconSys	
	SSI108	**SiliconSys (3736)**	
	SSI114	**SiliconSys (3736)**	110
	SSI115	**SiliconSys (3736)**	
	SSI122	**SiliconSys (3736)**	
Winchester Disk Memory Servo Preamplifier, for thin-film heads	VM114	VTC	
Winchester Disk Parallel-to-Serial Converter			
	HDC1100-05	SMC	
Winchester Disk Read/Write Amplifier			
	VM104	**VTC (3270)**	115
	VM104L	**VTC (3270)**	
	VM108	**VTC (3270)**	
	VM122	**VTC (3270)**	
Winchester Disk Read/Write Amplifier, 2-Channel			
	VM1172	**VTC (3270)**	
	VM1182	**VTC (3270)**	120
	VM2172	**VTC (3270)**	
	VM2182	**VTC (3270)**	
Winchester Disk Read/Write Amplifier, 4-Channel			
	VM1174	**VTC (3270)**	
	VM1184	**VTC (3270)**	
	VM2174	**VTC (3270)**	125
	VM2184	**VTC (3270)**	

† Military Temperature Range (−55° to 125°C)

* Typical Value

Bold face indicates additional data is provided on the page noted.

MICROPROCESSOR–System Components (Cont'd)

Peripheral Controllers (Cont'd)

Function	Device	Source
Winchester Disk Read/Write Amplifier, 6-Channel		
	VM1176	**VTC** (3270)
	VM1186	**VTC** (3270)
	VM2176	**VTC** (3270)
	VM2186	**VTC** (3270)
Winchester Disk Read/Write Amplifier, 8-Channel		
	VM1178	VTC
	VM2178	**VTC** (3270)
	VM2188	**VTC** (3270)
Winchester Disk Read/Write Preamplifier		
	SSI101A	Fairchild
	SSI114	Fairchild
	SSI116	Fairchild
	SSI117-2	Fairchild
	SSI117-4	Fairchild
	SSI117-5	Fairchild
	SSI117-6	Fairchild
	SSI117-8	Fairchild
	VM117	VTC
	VM118	VTC
	VM217	VTC
	VM218	VTC
Winchester Disk Serial to Parallel Converter		
	HDC1100-01	SMC
Winchester Disk Servo Preamplifier		
	μA2480	Fairchild
	μA24H80	Fairchild
	VM101	**VTC** (3270)
	VM116	VTC
	VM216	**VTC** (3270)
Winchester Disk Servo Preamplifier, for thin-film heads		
	VM214	**VTC** (3270)
Winchester, Error Detection and Support Logic		
	WD1014	Western
Winchester, Error Detection (Support Logic for WD1015)		
	WD1014	Western
Winchester Motor Speed Control		
	SSI591	**SiliconSys** (3736)
Winchester (or mass storage) Disk Controller (concept spec)	CL-DCC100	Cirrus
Winchester, Read Data Path		
	SSI540	**SiliconSys** (3736)
Winchester Read/Write Channel		
	VM542	**VTC** (3270)
Winchester Read/Write Circuit		
	CS117	Cherry
Winchester, Read/Write Circuit for thin-film heads		
	MC4290	NEC
Winchester Read/Write Circuit, 6-Channel		
	SSI117	**SiliconSys** (3736)
Winchester Read/Write Circuit, 8-Channel		
	SSI501	**SiliconSys** (3736)
Winchester, Support Logic		
	SSI545	**SiliconSys** (3736)
X-25 Protocol Controller		
	MC68605	Motorola
DMA, Dual Direct Memory Access Controller		
	MC68440	**Motorola** (1656)
Dual-Channel Multiprotocol Controller		
	8274	Intel
Four Phase Clock Generator		
	WD2143-03	Western

General Purpose

Function	Device	Source
Microprocessor Compatible Analog I/O Subsystem, 4-Channel Multiplexer, 8-Bit ADC, 8-Bit DAC Output		
	HS9460	HybridSys
D/A, Microprocessor Compatible D/A Converter		
	DAC-808A	† PMI
	DAC-808B	† PMI
	DAC-808E	PMI
	DAC-808F	PMI
	DAC-808G	PMI
Analog Input Data Acquisition Controller for A/D Converter		
	CY600	Cybernetic
Analog Input, Multiplexer, A/D (analog to pulse width output)	μA9708	Fairchild
Analog Input, Multiplexer, A/D Converter		
	MP20	**Burr-Brown** (3148)
	MP21	**Burr-Brown** (3148)
	MP22	**Burr-Brown** (3148)
	MP32	**Burr-Brown** (3148)
	μPD7001	NEC
	μPD7002	NEC
Analog Output, D/A Converter, Latched Input		
	NE5018	**Signetics** (3690,3720,3725)
Analog Output, Dual D/A Converter		
	MP10	**Burr-Brown** (3148)
	MP11	**Burr-Brown** (3148)
Arithmetic Game Advanced Educational		
	MM57455	National
Arithmetic Logic/Multiplier, Floating Point Set		
	WTL1064	Weitek
	WTL1064A	Weitek
	WTL1065	Weitek
	WTL1065A	Weitek
	WTL1164	Weitek
	WTL1164A	Weitek
	WTL1165	Weitek
	WTL1165A	Weitek
	WTL1264	Weitek
	WTL1264A	Weitek
	WTL1265	Weitek
	WTL1265A	Weitek
Arithmetic Processor		
	AM9511A	AMD
	AM9511A-4	AMD
	AM9512	AMD
	AM9512-1	AMD
	8231A	Intel
Arithmetic Processor, 2-chip set		
	WTL1032AC	Weitek
	WTL1032AM	† Weitek
	WTL1032C	Weitek
	WTL1032M	† Weitek
	WTL1033AC	Weitek
	WTL1033AM	† Weitek
	WTL1033C	Weitek
	WTL1033M	† Weitek
Asynchronous Bidirectional Bus Extender and Repeater		
	N8X41	**Signetics** (1193)
Asynchronous Communication Interface Adapter		
	S6850	GouldAMI
	S68A50	GouldAMI
	S68B50	GouldAMI
	HD6350	Hitachi
	HD63A50	Hitachi
		(Continued)

Function	Device	Source
Asynchronous Communication Interface Adapter (Cont'd)		
	HD63B50	Hitachi
	MC6850	**Motorola** (1663)
	MC68A50	Motorola
	MC68B50	Motorola
	MC68HC51	**Motorola** (1663)
	EF68A50	ThomsonCSF
	EF68B50	ThomsonCSF
	EF6850	ThomsonCSF
Bar Code Processor		
	NCR8301	NCR
Battery Backup Circuit		
	ICL7673	**Intersil** (3603)
Burst Error Processor		
	AM9520	AMD
	AMZ8065	AMD
Bus Interrupter Module		
	MC68153	Motorola
Bus Transceiver, SCSI (48 mA)		
	NCR8310	**NCR** (3214)
Clock/Calendar with Serial I/O		
	μPD1990A	NEC
Clock/Calendar with Serial I/O (Inter IC interface)		
	PCB8573	**Signetics** (3733)
Clock/Calender, Real-Time		
	MSM68321	OKI
Clock Generator and Controller		
	Z8581	Zilog
Clock, Real Time		
	MM58174	National
	MM58274	National
Clock, Real Time, 12/24 Hour Format (Uses 8-bit bidirectional data bus)		
	ICM7170	Intersil
Controller, Programmable Integrated Controller/Sequencer (State machine with instruction processing for decision, control or timing applications)		
	LS7270	**LSIComp** (1099)
Data Encryption Set		
	F9414STC	Fairchild
	F9414STM	† Fairchild
Data Encryption Unit		
	8294	Intel
Document Image Compressor/Expander CCITT		
	AM7970	AMD
Encoder/Decoder MIL-STD-1553 (Manchester serial word to 16-bit parallel bus)		
	MT32008	DDC
Floating Point Processing Unit		
	AM8232	AMD
	8232	Intel
Function Generator, D/A Controller		
	CY360	Cybernetic
Peripheral Clamping Array		
	TCF6000	Motorola
Peripheral Driver Addressable		
	NE590	**Signetics** (3726)
	NE591	**Signetics** (3726)
Peripheral Interface Adapter		
	S6821	GouldAMI
	S68A21	GouldAMI
	S68B21	GouldAMI
	HD6321	Hitachi
	HD63A21	Hitachi
	HD63B21	Hitachi
	MC6821	**Motorola** (1663)
	MC68A21	Motorola
	MC68B21	Motorola
	MC68HC21	Motorola
		(Continued)

† Military Temperature Range (−55° to 125°C)

* Typical Value

Bold face indicates additional data is provided on the page noted.

MICROPROCESSOR–System Components (Cont'd)

Function	Device	Source	Line
General Purpose (Cont'd)			
Peripheral Interface Adapter (Cont'd)			
	EF6821	ThomsonCSF	
	EF68A21	ThomsonCSF	
	EF68B21	ThomsonCSF	
	UM6520	UMC	
	UM6520A	UMC	5
	UM6521	UMC	
	UM6521A	UMC	
	UM6522	UMC	
	UM6522A	UMC	
Priority Interrupt Controller			
	AM25LS2513C	AMD	10
	AM2914C	AMD	
	AM2914M	† AMD	
	M8214	† Intel	
	MC6828	Motorola	
	MC8507	Motorola	15
	SFC-2914	ThomsonCSF	
Real-Time Clock interface (allows time of day to be retrieved over μP bus)			
	C3008	LMS	
See also Interface-Error Checking Circuits Keyboard Encoders, Line Circuits, Memory and Peripheral Drivers, Serial Transmitters/Receivers, Memory E²PROMs, FIFOs, LIFOs, PLAs, PROMs, RAMs, ROMs			
Signal Processing Interface (Microcomputer including 16x16 Multiplier, RAM, ROM for rapid signal processing)			
	μPD7720	NEC	
	μPD77P20	NEC	20
Speech Synthesis System			
	Digitalker	National	
Super Number Cruncher			
	MM57409	National	
Synchronous Serial Data Adapter			
	MC6852	**Motorola (1663)**	
	EF6852	ThomsonCSF	
System Timing Controller			
	AM9513A	AMD	25
Universal Microprocessor Power Supply Controller			
	TCA5600	Motorola	
	TCF5600	Motorola	
UPC/EAN Scanner			
	NCR8415	NCR	

† Military Temperature Range (−55° to 125°C)

* Typical Value

Bold face indicates additional data is provided on the page noted.

Last Page This Section. Next Page 1601.

IC MASTER

INTERNATIONAL DISTRIBUTORS

ARGENTINA, COLOMBIA, ECUADOR, VENEZUELA, MEXICO, PERU

Intectra
2629 Terminal Blvd.
Mt. View, CA 94043
Tel. (415) 967-8818

AUSTRALIA

A J Distributors Pty Ltd.
44 Prospect Rd.
Prospect, S. Australia 5082
Tel. 269-1244
Telex (790) 82653

BELGIUM

J. P. LeMaire S.A.
Limburg Stirum 243
1810 Wemmel, Belgium
Tel. 02/4600560
Telex (846) 24610

CHINA (P.R.C.)

Sunroad (H.K.) International Ltd.
Lee Man Commercial Building
9/F, 105-107 Bonham Strand,
Hong Kong
Tel: 5-431741
Telex (780) 75952

DENMARK

Advanced Electronik
Mariendalsvej 55
DK2000, Copenhagen F,
Denmark
Tel: (01) 194433
Telex (855) 22431

EGYPT

Alag Trading Co.
3, Amiralay
Hussein Gad Str—Heliopolis
P.O. Box 5115
Heliopolis Gharb, Cairo,
Egypt

ENGLAND

J. B. Tratsart Ltd.
Dogmersfield Nr.
Baskingstoke
Hampshire RG27 8SU,
England
Tel. 02514 3334
Telex (851) 916196

FINLAND

ITT Multikomponent
Tyapajankatu 5
PL107,00501
Helsinki 50, Finland
Tel. 739100
Telex (857) 121450

FRANCE

Conseilet Promotion
28 Rue de la Procession
92150 Suresnes, France
Tel. 5064275
Telex (842) 614596F

HOLLAND

Manduax Component Division
5473ZG Heeswijk-Dinther
Molenberg 1, Holland
Tel. 04139 8895
Telex: (844) 74810

HONG KONG

Sunroad (H.K.) International Ltd.
Lee Man Commercial Building
9/F, 105-107 Bonham Strand
Hong Kong
Tel. 5-431741
Telex: (780) 75952

INDIA

Radio & Craft Publications
4794 Bharat Ram Road
23 Darya Ganj
New Delhi 110002, India
Tel. 237147
Telex/Cable Radiocraft,
New Delhi

ISRAEL

STG International Ltd.
10 Huberman Street
P.O. Box 1276
61012 Tel Aviv, Israel
Tel. 248231
Telex (922) 342229

ITALY

J. Soft S.R.L.
Viale Restelli, 5
20124 Milan, Italy
Tel: 68 80841
Telex 316213 REINA

JAPAN

OHMSHA Ltd.
1-3 Chome, Kanda Nishikicho
Chiyoda-Ku,
Tokyo 101, Japan
Tel. 03-233 0641
Telex (781) 0222-3125

Tokyo International Communications Inc.
Miyajima Bldg.
28 Yoyogi 1-chome,
Shibuya-ku
Tokyo 151, Japan
Tel. 379-2561
Telex (781) 33106

NORWAY

Fagbokservice A.S.
Ekebergveien, 130B
Boxs 94
Bekkelagshogda, Oslo 11,
Norway
Tel. (02) 282237

SINGAPORE, THAILAND, INDONESIA, MALAYSIA, PAKISTAN AND BANGLADESH

Tech Publications
B1-47 Sim Lim Tower
Jalan Besar,
Singapore
Tel: 2914595
Telex (786) 2RS56791

SOUTH AFRICA

Import-Export
P.O. Box 5467
Weltevreden Park 1715
South Africa
Tel. 011-6794362
Telex 426392

SPAIN

Sagitron
Castello 25, 2, °
28001 Madrid, Spain
Tel. 402 6085
Telex (831) 43819

SWITZERLAND

W. Stolz AG
Taefernstrasse 15
CH-5405-Baden-Daettwil,
Switzerland
Tel. 056 840151
Telex (845) 825088A SAG CH

TAIWAN (R.O.C.)

Sunroad (H.K.) International Ltd.
Lee Man Commercial Building
9/F, 105-107 Bonham Strand,
Hong Kong
Tel: 5-431741
Telex (780) 75952

TURKEY

EMPA Elecktronik Mamulleri Pazarlama AS
Tersane Cad. Kuthan 38/408
Tr-Kara Koy, Instanbul,
Turkey
Tel. (11) 496249
Telex (821) 24429

WEST GERMANY

Astronic GmbH
Winzererstrasse 47d
8000 Munich 40,
West Germany
Tel. (089) 309031
Telex (841) 5216187

USA

Gene Selven & Associates, Inc.
10080 N Wolfe Road,
Suite 372
Cupertino, CA 95014
Tel: (408) 996-7400
Telex 4993488

Hearst
HEARST BUSINESS PUBLISHING, INC.
645 Stewart Avenue, Garden City, NY 11530 USA (516) 227-1300

WHAT'S NEW IN IC MASTER

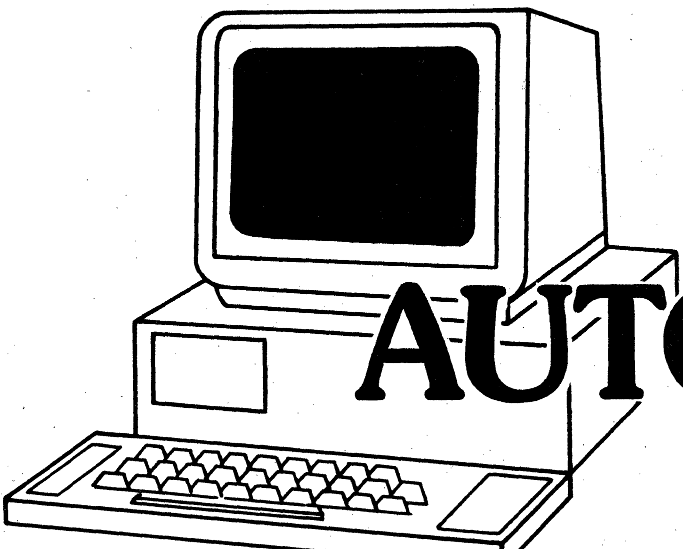

DON'T MISS THE NEW DESIGN AUTOMATION IC SECTION

Quick and easy way to determine relationships between workstations, computers, software, semicustom manufacturers and CAE/CAD providers.

Volume II, page 4901

WHAT'S NEW IN IC MASTER

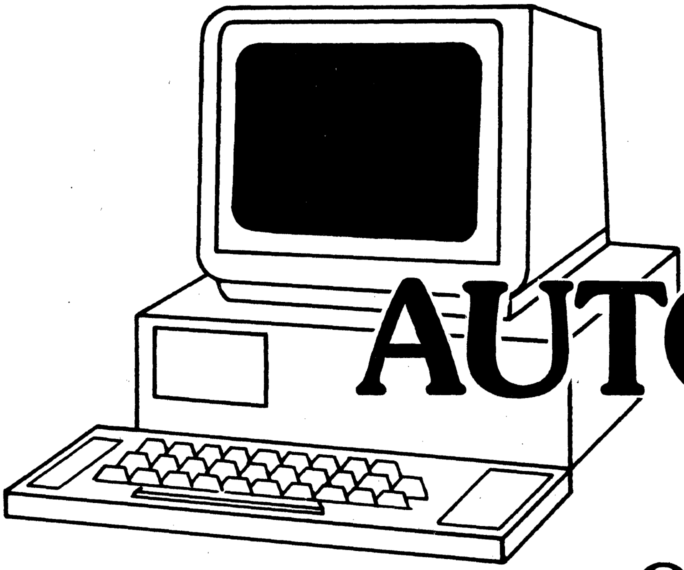

DON'T MISS THE NEW DESIGN AUTOMATION IC SECTION

Quick and easy way to determine relationships between workstations, computers, software, semicustom manufacturers and CAE/CAD providers.

Volume II, page 4901

μ Processor

THE UNIX™ MICROSYSTEM

The AT&T *UNIX* Microsystem offers 32-bit computer system designers and programmers complete system design capability. It provides the 32-bit building-block solution to system design and consists of a 32-bit microprocessor CPU with a family of 32-bit peripherals, including virtual memory, math, and I/O coprocessors; prototyping and development hardware and software tools; and software generation programs. The devices are available in 10 MHz, 14 MHz, and 18 MHz operating frequency versions and are compatible with other general-trade peripherals. *UNIX* System V is the operating system used during system development and application program design and provides the portability that protects your software investment.

WE® 32100 Microprocessor

The *WE* 32100 Microprocessor is a high-performance, single-chip, full 32-bit CPU, optimized for efficient operation in a high-level language environment. System memory is addressed over a 32-bit address bus using either virtual or physical addresses. The resulting memory space, over four billion bytes, greatly increases the flexibility of memory organization and provides ample space for program and data storage. A complete virtual memory system can be realized with the addition of the *WE* 32101 Memory Management Unit. The *WE* 32100 Microprocessor provides:

- Hardware support of the *UNIX* System process model
- Multiuser system support of *UNIX* System V
- Flexible, 15-level interrupt structure
- Nine 32-bit general-purpose registers and seven 32-bit special-purpose registers
- Four levels of execution privilege
- On-chip 64 x 32-bit instruction cache
- A **no-glue** coprocessor interface
- Synchronous or asynchronous interfacing to external devices
- Multiprocessor support.

WE 32101 Memory Management Unit

The *WE* 32101 Memory Management Unit (MMU) virtual memory coprocessor provides logical-to-physical address translation, memory organization, control, and access protection for the CPU. It supplies full hardware support for a demand-paged and demand-segmented virtual memory system implementation. Also performed are on-chip miss-processing and fault detection and resolution. Multiple MMU configurations are fully supported.

WE 32102 Clock

The *WE* 32102 Clock supplies the required two-phase, CMOS-level clock frequency source. Access is provided for an external oscillator to control the output frequency.

WE 32103 DRAM Controller

The *WE* 32103 DRAM Controller provides bus interface and control for a high-speed, high-capacity, main memory subsystem for the CPU. The DRAM controller is responsible for input address multiplexing, access and cycle time management, and refresh management of the DRAM subsystem. Pretranslated row access provides shorter paged translation times resulting in increased memory performance. A full error detection and correction device interface, including transparent memory scrubbing, is provided. Dual-port memory configurations are supported.

WE 32104 DMA Controller

The *WE* 32104 DMA Controller I/O coprocessor provides the ability to transfer large amounts of data quickly and efficiently between the main memory subsystem and I/O devices or between different memory locations. The DMA controller permits the full 32-bit system bus to be used without external logic and provides a separate 8-bit peripheral bus to connect I/O devices to the system bus. This allows concurrent operation with the CPU as well as greater system throughput. Four independent prioritized DMA channels are provided. Request chaining for channel initialization occurs without CPU intervention.

™ Trademark and ® registered trademark of AT&T.

UNIX SYSTEM V

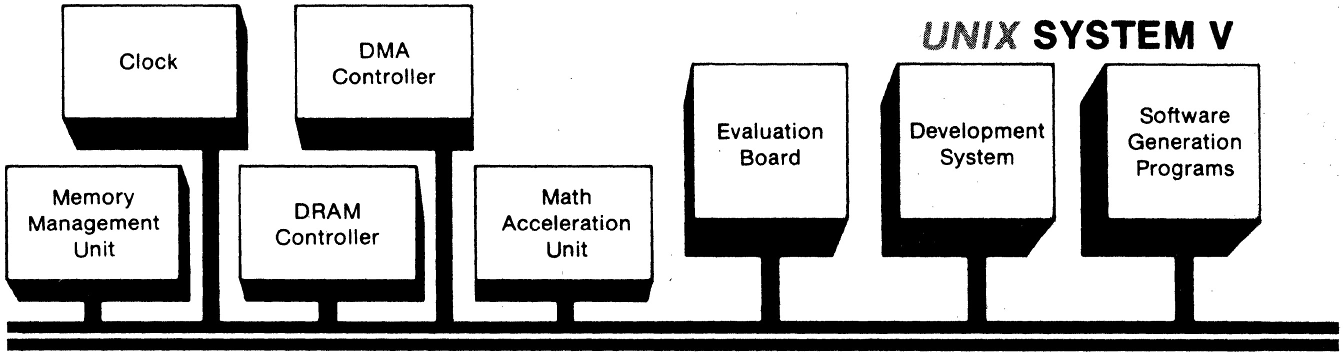

WE **32106 Math Acceleration Unit**

The *WE* 32106 Math Acceleration Unit (MAU) provides IEEE standard floating point coprocessing capability for the CPU. The MAU can operate in peripheral mode, allowing operation with general-trade microprocessors, or as a coprocessor for the *WE* 32100 Microprocessor. It is compatible with the IEEE format for binary floating point arithmetic. Support for transcendental functions is provided via the *WE* 321SG Software Generation Programs.

WE **321DS Microprocessor Development System**

The *WE* 321DS Microprocessor Development System is a powerful collection of integrated hardware, software, and firmware tools that support development of *WE* 32100 CPU based applications. The *WE* 321AP Microprocessor Analysis Pod is a major development system component. Development system highlights include:

- An interactive monitor program and symbolic debugger
- A high-level C language debugger
- Physical/virtual mode software debugging
- In-circuit emulation of the CPU and MMU
- Symbolic tracing and disassembly capability for a Hewlett-Packard 64000 Logic Development System
- Integrated interface to a Hewlett-Packard 64000 Logic Development System
- User process control and file transfers into memory for a *UNIX* System V host processor.

WE **321EB Microprocessor Evaluation Board**

Prototyping and performance evaluation support for the *WE* 32100 CPU and the *WE* 32101 MMU are available using the *WE* 321EB Microprocessor Evaluation Board. The board features:

- 64 Kbytes of zero wait-state RAM
- 32 Kbytes of additional RAM
- An interactive monitor program and symbolic debugger
- Individually maskable interrupts
- Three independent, programmable 16-bit interval timers
- Jumper selectable wait states, interrupts, counters, and memory options
- Serial and parallel ports
- Access to the microprocessor bus
- MAU capability via optional MAU expansion board.

WE **321SG Software Generation Programs**

The *WE* 321SG Software Generation Programs (SGP) provide software support for the *WE* 32100 Microprocessor. The SGP runs under the *UNIX* System V and permits high-level language program coding in C language. It includes a C compiler, an assembler, a link editor, and utility programs. Using the SGP, all symbolic information is preserved for testing at the source level. The SGP provides:

- Efficient source and object file management via *UNIX* System V
- Utilities for reading and manipulating object code files
- Object code formatted for the Development System and Evaluation Board.

Additional Information

For additional information on the *UNIX* Microsystem, contact your AT&T Sales Account Representative, or call:

1-800-372-2447

82C201/82C202/82A203/82A204/82A205
PC/AT COMPATIBLE CHIPSet™

- **Fully IBM PC AT Compatible**
- **Flexible architecture allows usage in any iAPX 286 design**
- **Early ALE Generation**
- **Early RAS Generation**
- **Low Power CMOS Process Technology for 82C201 and 82C202, and Advance Low Power Schottky Process Technology for 82A203, 82A204 and 82A205**
- **6 Mhz Zero Wait State or 8 Mhz One Wait State Capability**
- **Complete System Board Memory Decode**
- **Configurable RAM Selects**
- **16 Bit to 8 Bit Conversion Logic**
- **Variable Wait State Selection**
- **24 mA sink and -3.3 mA source current for System Bus outputs**
- **Single 5 Volt Supply**

The PC/AT compatible CHIPSet is a 5 chip LSI implementation of most of the MSI/SSI logic used to control the IBM Personal Computer AT. The flexible architecture of the chip set allows it to be used in any iAPX 286 based system design. The 82C201 and 82C202 perform the functions of the Intel 82284 Clock Generator and Ready Interface, 82288 Bus Controller for iAPX286 processors, 8284A Clock Generator and Driver, and replace 30 other MSI/SSI devices in the IBM PC AT design. Significant new features have been added to enhance system performance while still maintaining PC AT compatibility.

Two signals, ALE and RAS, can be altered with the activation of the Early Mode select line ($\overline{\text{EMODE}}$). When $\overline{\text{EMODE}}$ is low, both signals become valid before the normal ALE and RAS signals. This allows the use of 120nsec DRAMS in a 6Mhz zero wait state system or 150nsec DRAMS in a 8Mhz one wait state system. Variable wait state selection is also provided to accommodate slower memories and peripherals where necessary.

The 82A203, 82A204, and 82A205 include most of the buffers and drivers required in an IBM PC AT compatible design. Advanced Schottky Bipolar process technology is used to implement these devices, allowing high speed and high source (-3.3mA) and sink (24mA) current capability.

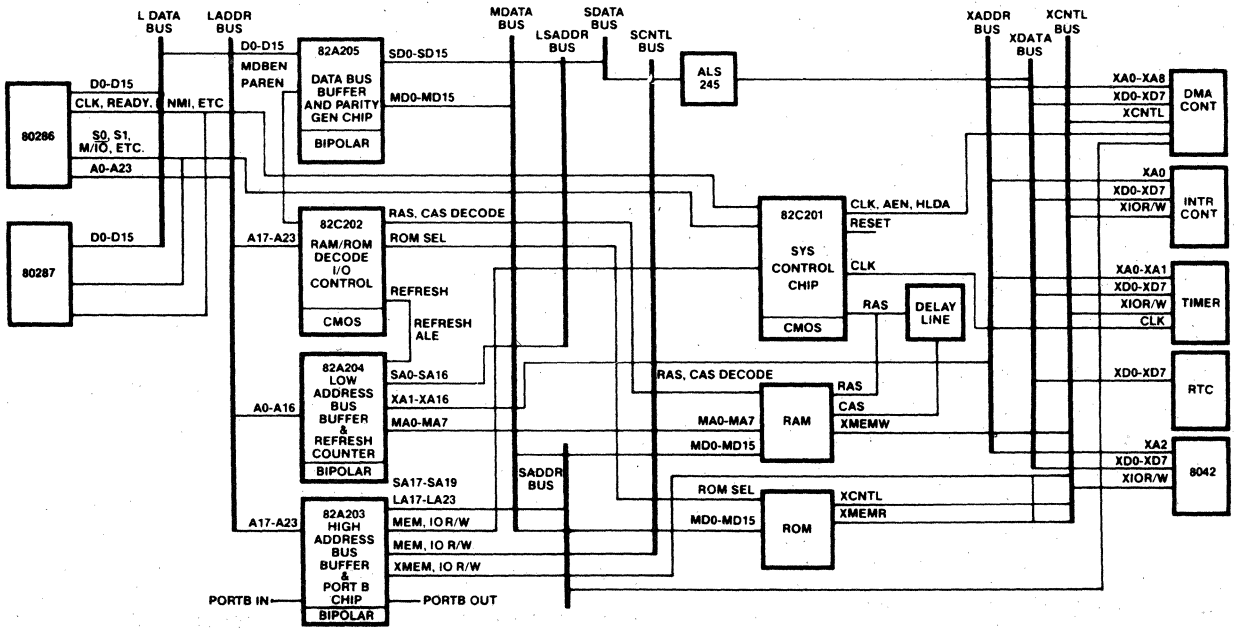
L DATA BUS
LADDR BUS
MDATA BUS
SDATA BUS
LSADDR BUS
SCNTL BUS
XADDR BUS
XDATA BUS
XCNTL BUS
80286
D0-D15
CLK, READY, NMI, ETC
S0, S1, M/IO, ETC.
A0-A23
80287
D0-D15
D0-D15
MDBEN
PAREN
82A205
DATA BUS BUFFER AND PARITY GEN CHIP
BIPOLAR
SD0-SD15
MD0-MD15
ALS 245
XA0-XA8
XD0-XD7
XCNTL
DMA CONT
XA0
XD0-XD7
XIOR/W
INTR CONT
A17-A23
82C202
RAM/ROM DECODE I/O CONTROL
CMOS
RAS, CAS DECODE
ROM SEL
REFRESH
REFRESH ALE
82C201
SYS CONTROL CHIP
CMOS
CLK, AEN, HLDA
RESET
CLK
RAS
DELAY LINE
XA0-XA1
XD0-XD7
XIOR/W
CLK
TIMER
XD0-XD7
RTC
A0-A16
82A204
LOW ADDRESS BUS BUFFER & REFRESH COUNTER
BIPOLAR
SA0-SA16
XA1-XA16
MA0-MA7
RAS, CAS DECODE
MA0-MA7
MD0-MD15
RAM
RAS
CAS
XMEMW
XA2
XD0-XD7
XIOR/W
8042
SADDR BUS
SA17-SA19
LA17-LA23
A17-A23
82A203
HIGH ADDRESS BUS BUFFER & PORT B CHIP
BIPOLAR
MEM, IO R/W
MEM, IO R/W
XMEM, IO R/W
PORTB IN
PORTB OUT
ROM SEL
MD0-MD15
ROM
XCNTL
XMEMR

Figure 1. PC/AT Block Diagram

82C431/82C432/82C433/82C434
ENHANCED GRAPHICS CHIPSet™

- **100% hardware and software compatible to IBM Enhanced Graphics Adapter card**
- **Supports IBM Color Graphics and Monochrome adapters, and Hercules Graphics modes**
- **Bit mapped graphics in four planes**
- **640 × 350 resolution for IBM Enhanced Color Display**
- **Light pen interface**
- **Full 16 color support in 640 × 200 and 320 × 200 pixels for IBM Color Display**
- **Supports 720 × 350 pixels for IBM Monochrome Displays**
- **Soft scrolls, Pans and Windows through a 1 M-pixels memory**
- **Supports 256K bytes of memory using 64K X 4 DRAMs**

The Enhanced Graphics CHIPSet offers a complete solution for implementing an IBM Enhanced Graphics Adapter compatible controller. The chip set provides a highly integrated solution, allowing a complete Enhanced Graphics controller implementation using 32 chips, including 256K bytes of display memory.

The chip set consists of the 82C431 Graphics Controller, 82C432 Sequencer, 82C433 Attributes Controller and 82C434 CRT Controller. The chip set supports color and monochrome direct drive displays in various modes. Other features include bit mapped graphics, light pen interface, and RAM loadable character generator. The chip set supports alphanumeric (AN) and all-points-addressable (APA) graphics modes, including all modes supported by the IBM Monochrome Display and Color/Graphics Adapters. Additionally, other modes provide 720 × 350 pixels support for the IBM Monochrome Display. It also provides full 16 color support for 320 × 200 pixel and 640 × 200 pixel resolutions for the IBM color display. The IBM Enhanced Color Display is supported with AN and APA graphics with a resolution of 640 × 350 pixels.

The 82C431 is packaged in 68-pin Plastic Leaded Chip Carrier (PLCC), 82C432 and 82C433 in 40-pin DIPs, and 82C434 in 84-pin PLCC.

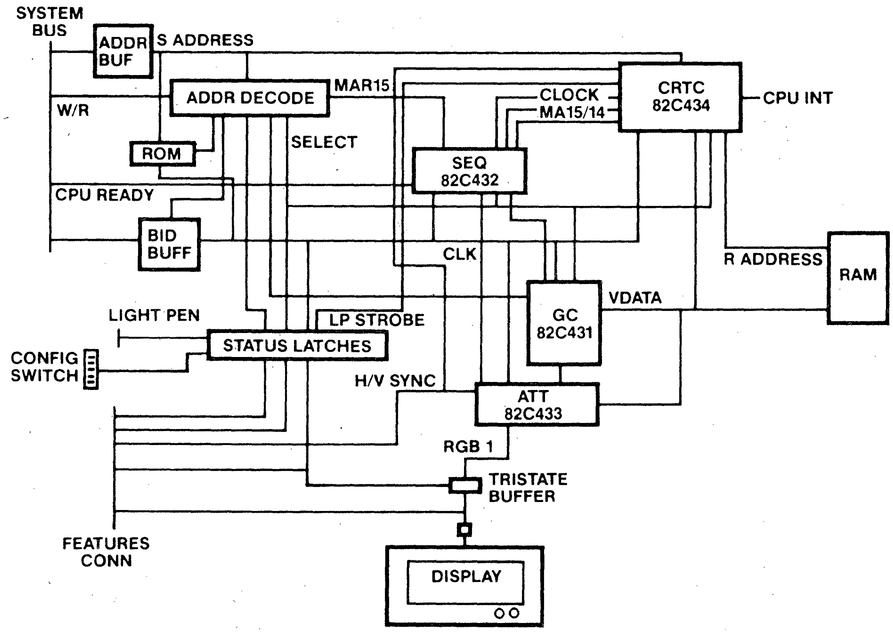
SYSTEM BUS
ADDR BUF
S ADDRESS
ADDR DECODE
MAR15
CLOCK
MA15/14
CRTC 82C434
CPU INT
W/R
ROM
SELECT
SEQ 82C432
CPU READY
BID BUFF
CLK
R ADDRESS
RAM
VDATA
LIGHT PEN
LP STROBE
GC 82C431
CONFIG SWITCH
STATUS LATCHES
H/V SYNC
ATT 82C433
RGB 1
TRISTATE BUFFER
FEATURES CONN
DISPLAY

Figure 1. Enhanced Graphics Controller

WHAT'S NEW IN IC MASTER

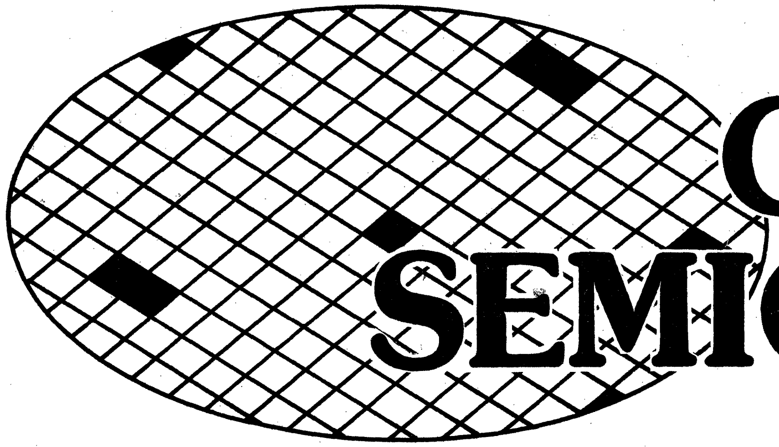

DON'T MISS THE EXPANDED CUSTOM/ SEMICUSTOM IC SECTION

Lists software design tools available for Programmable Logic Devices, Gate Arrays, Standard Cells, and Linear and Linear/ Digital Arrays. Major macros in VLSI/LSI Macrocell Libraries are listed by source.

Volume II, page 4401

FAIRCHILD
A Schlumberger Company

F9450 High-Performance 16-Bit Bipolar Microprocessor

DESCRIPTION

The Fairchild F9450 microprocessor is the nucleus of a family of high-performance devices intended for commercial and military applications requiring sophisticated, high-speed, real-time processing. It has, on-chip, all of the functions necessary to perform complete floating-point operations without the use of a coprocessor. Other on-chip capabilities allow addressing of up to 2M words of memory and, with the addition of the optional F9451 Memory Management Unit (MMU), up to 16M words of memory.

Real-time processing is achieved through advanced architecture that incorporates two programmable timers, user-accessible general-purpose registers, a complete 16-level interrupt processor, and a comprehensive fault handler on the chip. Multiprocessing is supported by a flexible bus arbitration scheme, as well as process synchronization (test and set) instructions.

The F9450 instruction set is optimized for complex real-time applications. It implements the complete MIL-STD-1750A instruction set architecture (ISA) and its floating-point standard on a single chip.

The F9450 family of support circuits and systems provides additional capabilities, including memory-mapped expansion with the F9451 MMU and write protection with the F9452 Block Protect Unit (BPU). Additional support circuits are being developed.

Comprehensive software support for the F9450, including assemblers, loaders, simulators, and compilers, is provided by Fairchild and other sources. Software development for the F9450 can be performed using the VAX-11/7XX™ computers using the VMS™ operating system.

For complete information on available support circuits and software, contact your local Fairchild Sales Office or the Microcontroller Division.

Features

- **Single-Chip 16-Bit Microprocessor with 32- and 48-Bit Floating-Point Arithmetic On-Chip**
- **Fast Operation — 0.25 μs Add, 1.85 μs Integer Multiply, Capable of Greater than 1.5 MIPS Throughput**
- **Real-Time Processing: Two Programmable Timers, 16 Levels of Vectored Interrupt**
- **Address Space of Up to 2M Words, Expandable to 16M Words with Optional F9451**
- **Instruction Set Optimized for Real-Time Applications (MIL-STD-1750A ISA)**
- **Built-In Self-Test, Fault Handling, and Abort**
- **Twenty-Four User-Accessible Registers**
- **Built-In Multiprocessor Capabilities**
- **Single- and Double-Precision Integer Arithmetic**
- **Complete High-Level Language and Design Development Support Available**
- **Static Operation with Single Clock: 0-20 MHZ**
- **TTL Inputs and Outputs with 8 mA Drive Capability**
- **Small Size 64-Pin DIP or Optional Surface-Mount Packages**
- **Full Performance over −55°C to +125°C Operating Temperature Range**
- **Bipolar I³L® Technology**

Signal Functions

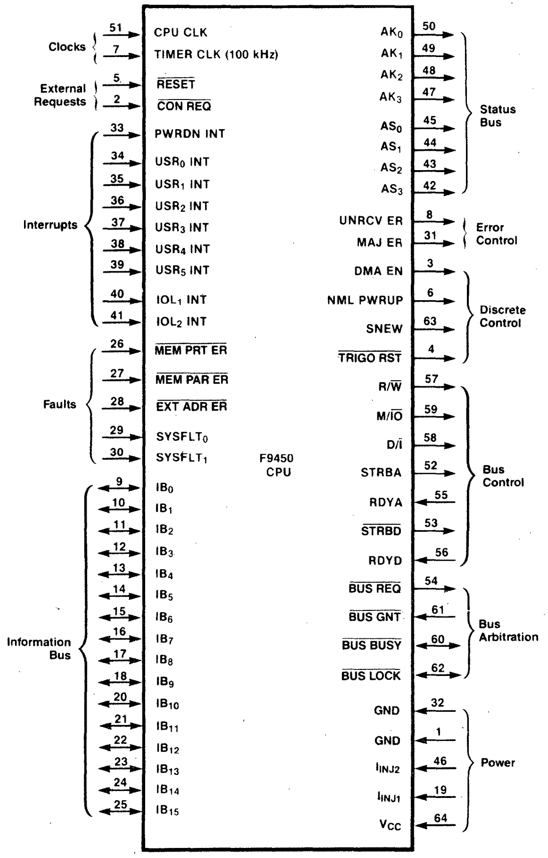
Clocks
51 CPU CLK
7 TIMER CLK (100 kHz)
External Requests
5 RESET
2 CON REQ
Interrupts
33 PWRDN INT
34 USR0 INT
35 USR1 INT
36 USR2 INT
37 USR3 INT
38 USR4 INT
39 USR5 INT
40 IOL1 INT
41 IOL2 INT
Faults
26 MEM PRT ER
27 MEM PAR ER
28 EXT ADR ER
29 SYSFLT0
30 SYSFLT1
Information Bus
9 IB0
10 IB1
11 IB2
12 IB3
13 IB4
14 IB5
15 IB6
16 IB7
17 IB8
18 IB9
20 IB10
21 IB11
22 IB12
23 IB13
24 IB14
25 IB15
F9450 CPU
AK0 50
AK1 49
AK2 48
AK3 47
AS0 45
AS1 44
AS2 43
AS3 42
Status Bus
UNRCV ER 8
MAJ ER 31
Error Control
DMA EN 3
NML PWRUP 6
SNEW 63
TRIGO RST 4
Discrete Control
R/W 57
M/IO 59
D/I 58
STRBA 52
RDYA 55
STRBD 53
RDYD 56
Bus Control
BUS REQ 54
BUS GNT 61
BUS BUSY 60
BUS LOCK 62
Bus Arbitration
GND 32
GND 1
IINJ2 46
IINJ1 19
VCC 64
Power

® I³L is a registered trademark of Fairchild Semiconductor Corp.
™ VAX and VMS are trademarks of Digital Equipment Corporation.

F9451 Memory Management Unit (MMU)

DESCRIPTION

The F9451 Memory Management Unit (MMU) controller provides facilities to expand the memory addressing range of the F9450 CPU up to 16M words of physical memory and provides access protection mechanisms for instructions and data. The MMU subsystem consists of the F9451 controller together with four F93479 or equivalent static RAMs (SRAMs), used as instruction and data maps, and two octal buffers (54/74F245).

The MMU chip set works with the F9450, either by itself or together with the F9452 Block Protection Unit (BPU) to implement MIL-STD-1750A memory management and protection functions.

Features

- **Allows up to 16M Words of Memory Address Space**
- **Logical-to-Physical Address Translation**
- **Protection of the Logical Space in 4K Word Pages for:**
  - **—Access Key to Access Lock Match**
  - **—Write Protect (Data)**
  - **—Execute Protect (Instructions)**
- **On-Chip Cache Mechanism**
- **Two Translation Maps**
  - **—Instruction Map (256 x 16)**
  - **—Data Map (256 x 16)**
- **High-Performance over Military Temperature Range**
- **Static Operation with Single 0-20 MHz Clock**
- **TTL-Compatible Inputs and Outputs**
- **+5 V Power Supply and Injector Current Source Required**
- **64-Pin DIP or Surface Mount**
- **Bipolar LSI I³L Technology**

F9452 Block Protect Unit (BPU)

DESCRIPTION

The Fairchild F9452 Block Protect Unit (BPU) controller provides write protection for up to 1M word of physical memory for both CPU and DMA access in systems using the F9450 CPU. The BPU chip set works with the F9450 microprocessor, either by itself or together with the F9451 Memory Management Unit (MMU) to implement MIL-STD-1750A memory block protection functions.

A complete BPU consists of the F9452 controller and one F93479 or equivalent static RAM (SRAM) that is used for storage of CPU and DMA protection tables. Separate tables are maintained for CPU and DMA memory spaces. Global write protection is provided from reset until memory writes are enabled.

Signal Functions

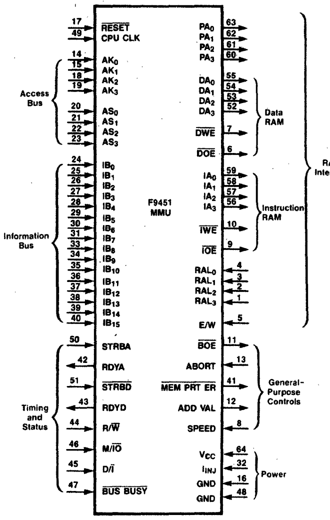
F9451 MMU
17 RESET
49 CPU CLK
Access Bus
14 AK_0
15 AK_1
18 AK_2
19 AK_3
20 AS_0
21 AS_1
22 AS_2
23 AS_3
Information Bus
24 IB_0
25 IB_1
26 IB_2
27 IB_3
28 IB_4
29 IB_5
30 IB_6
31 IB_7
33 IB_8
34 IB_9
35 IB_{10}
36 IB_{11}
37 IB_{12}
38 IB_{13}
39 IB_{14}
40 IB_{15}
Timing and Status
50 STRBA
42 RDYA
51 STRBD
43 RDYD
44 R/W
46 M/IO
45 D/I
47 BUS BUSY
PA_0 63
PA_1 62
PA_2 61
PA_3 60
DA_0 55
DA_1 54
DA_2 53
DA_3 52
DWE 7
DOE 6
Data RAM
IA_0 59
IA_1 58
IA_2 57
IA_3 56
IWE 10
IOE 9
Instruction RAM
RAL_0 4
RAL_1 3
RAL_2 2
RAL_3 1
E/W 5
RAM Interface
BOE 11
ABORT 13
MEM PRT ER 41
ADD VAL 12
SPEED 8
General-Purpose Controls
V_{CC} 64
I_{INJ} 32
GND 16
GND 48
Power

Signal Functions

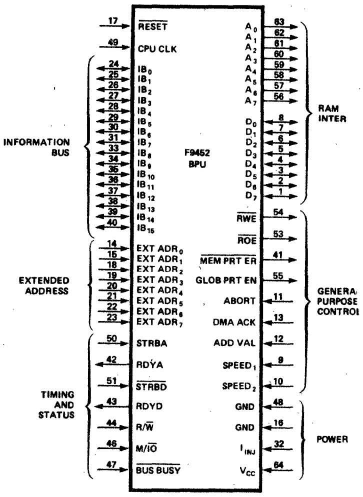
F9452 BPU
17 RESET
49 CPU CLK
INFORMATION BUS
24 IB_0
25 IB_1
26 IB_2
27 IB_3
28 IB_4
29 IB_5
30 IB_6
31 IB_7
33 IB_8
34 IB_9
35 IB_{10}
36 IB_{11}
37 IB_{12}
38 IB_{13}
39 IB_{14}
40 IB_{15}
EXTENDED ADDRESS
14 $EXT\ ADR_0$
15 $EXT\ ADR_1$
18 $EXT\ ADR_2$
19 $EXT\ ADR_3$
20 $EXT\ ADR_4$
21 $EXT\ ADR_5$
22 $EXT\ ADR_6$
23 $EXT\ ADR_7$
TIMING AND STATUS
50 STRBA
42 RDYA
51 STRBD
43 RDYD
44 R/W
46 M/IO
47 BUS BUSY
A_0 63
A_1 62
A_2 61
A_3 60
A_4 59
A_5 58
A_6 57
A_7 56
D_0 8
D_1 7
D_2 6
D_3 5
D_4 4
D_5 3
D_6 2
D_7 1
RAM INTER
RWE 54
ROE 53
MEM PRT ER 41
GLOB PRT EN 55
ABORT 11
DMA ACK 13
ADD VAL 12
$SPEED_1$ 9
$SPEED_2$ 10
GENERA PURPOSE CONTROI
GND 48
GND 16
I_{INJ} 32
V_{CC} 64
POWER

Features

- **Write Protection of Physical CPU and DMA Memory Space**
- **Protection of 1K Pages**
- **Global Memory Protection from Initialization/Reset to Enable**
- **High Performance Over Military Temperature Range**
- **Static Operation with Single 0-20 MHz Clock**
- **TTL-Compatible Inputs and Outputs**
- **+5 V Power Supply and Injector Current Source Required**
- **64-Pin DIP or Surface Mount**
- **Bipolar LSI I³L Technology**

® I³L is a registered trademark of Fairchild Semiconductor Corp.

FAIRCHILD
A Schlumberger Company

F9445 16-Bit Bipolar Microprocessor

DESCRIPTION

The F9445 is a 16-bit microprocessor implemented using Fairchild's Isoplanar Integrated Injection Logic ($I^3L^®$) technology. This bipolar technology and a sophisticated pipeline architecture combine to give the F9445 very fast execution times. The processor has eight program accessible registers and the capability of directly addressing 128K bytes (64K words) of memory. Up to 4M bytes of physical memory may be accessed using the F9444 memory management unit. The F9445 can address 62 I/O devices, handle 16 levels of priority interrupt, and perform fast direct memory access. It has control lines to provide operator-console functions and has an on-chip self-test program. The F9445 CPU is supported with a comprehensive family of LSI support circuits to permit cost and performance effective usage in high-performance microcomputer systems. The support circuits include the F9447 I/O Bus Controller, F9448 Programmable Multiport Interface, F9449 Multiple Data Channel Controller, F9444 Memory Management Unit, and F9470 Console Controller. It is also supported with a library of software packages, including editors, debuggers, macroassembler, relocating loader, real-time executive, interactive multi-user disk operating system and utilities, as well as high-level languages: FORTRAN, BASIC and PASCAL.

Features

- **Advanced Parallel Architecture Leading to Very Fast Execution Times—250 ns Register, 2.9 μs 16 × 16 Bit Multiply**
- **Directly Addresses Up to 128K Bytes of Memory with 11 Addressing Modes**
- **Eight Program-Accessible Registers (AC0, AC1, AC2, AC3, SP, FP, PC, PSW)**
- **Versatile Instruction Set Including Memory Reference, ALU, I/O, Stack, Multiply/Divide, and Floating Point Assist (Scale/Normalize) Instructions with 8-Bit Byte, 16-Bit Word or 32-Bit Double-Word Data**
- **Multi-Processing Capabilities**
- **Flexible Operator-Control Functions and Self-Test**
- **Static Operation with Single Clock Up to 24 MHz**
- **LS TTL Input/Output Structure with I^3L Internal Circuits**
- **40-Pin DIP Needing a Single +5 V Power Supply**
- **Full Military Temperature and Voltage Ranges**
- **Radiation-Tolerant Technology**
- **Comprehensive Family of Support Circuits**

F9445 Functional Diagram

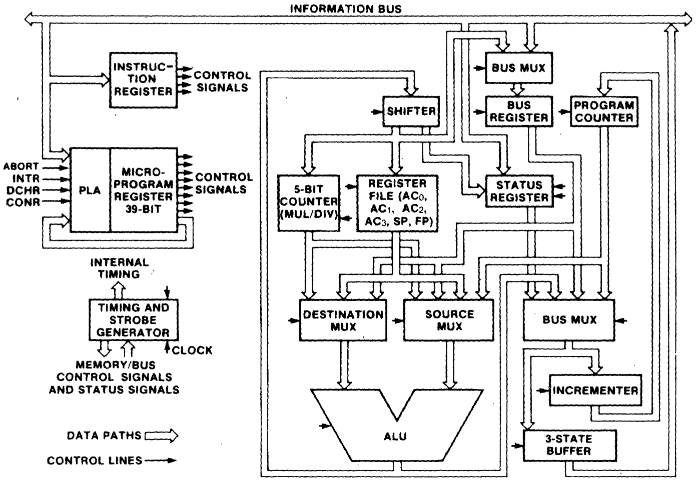
INFORMATION BUS
INSTRUCTION REGISTER
CONTROL SIGNALS
ABORT
INTR
DCHR
CONR
PLA
MICRO-PROGRAM REGISTER 39-BIT
CONTROL SIGNALS
INTERNAL TIMING
TIMING AND STROBE GENERATOR
CLOCK
MEMORY/BUS CONTROL SIGNALS AND STATUS SIGNALS
DATA PATHS
CONTROL LINES
BUS MUX
SHIFTER
BUS REGISTER
PROGRAM COUNTER
5-BIT COUNTER (MUL/DIV)
REGISTER FILE (AC0, AC1, AC2, AC3, SP, FP)
STATUS REGISTER
DESTINATION MUX
SOURCE MUX
BUS MUX
INCREMENTER
ALU
3-STATE BUFFER

Pin Functions

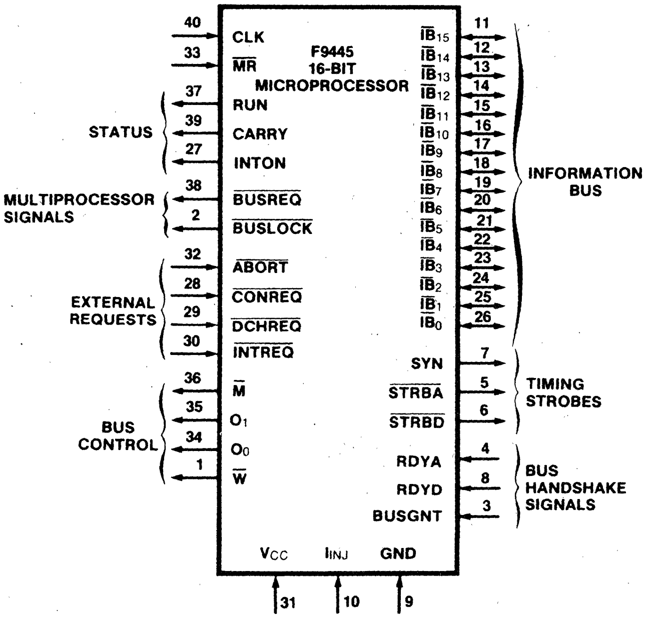
F9445 16-BIT MICROPROCESSOR
40 CLK
33 MR
STATUS
37 RUN
39 CARRY
27 INTON
MULTIPROCESSOR SIGNALS
38 BUSREQ
2 BUSLOCK
EXTERNAL REQUESTS
32 ABORT
28 CONREQ
29 DCHREQ
30 INTREQ
BUS CONTROL
36 M
35 O1
34 O0
1 W
IB15 11
IB14 12
IB13 13
IB12 14
IB11 15
IB10 16
IB9 17
IB8 18
IB7 19
IB6 20
IB5 21
IB4 22
IB3 23
IB2 24
IB1 25
IB0 26
INFORMATION BUS
SYN 7
STRBA 5
STRBD 6
TIMING STROBES
RDYA 4
RDYD 8
BUSGNT 3
BUS HANDSHAKE SIGNALS
VCC 31
IINJ 10
GND 9

® I^3L is a registered trademark of Fairchild Semiconductor Corp.

FAIRCHILD
A Schlumberger Company

SOFTWARE
F9450
MACRO Assembly Language

June 1985

DESCRIPTION

Fairchild's MACRO-50/RELOAD-50 program is an assembler and relocating loader for F9450 programming in absolute or relocatable code. MACRO-50 has the advantage of macro definition and expansion capability, and allows named operations with parameter passing, as in high-level languages. Using MACRO/RELOAD, you can develop libraries of modular programs for the F9450 high-performance 16-bit floating point microprocessor. These modules, ranging from simple routines to sophisticated system software, can then be loaded and linked into executable files and downloaded to your target machine RAM or EPROM programmer.

The MACRO-50 assembly language permits symbols for operation codes and labels. During assembly, it uses pseudo-ops for memory allocation and initialization, listing control, symbol table manipulation, interprogram communications, and repetitive or conditional controls. MACRO-50/RELOAD-50 is hosted on a VAX/VMS computer system.

The utility program LIBEDIT allows you to create, edit, and maintain libraries of relocatable modules. RELOAD-50 automatically includes those needed portions of a library linking your program.

FEATURES

Figure 1 Typical MACRO-50 Program Flow Chart

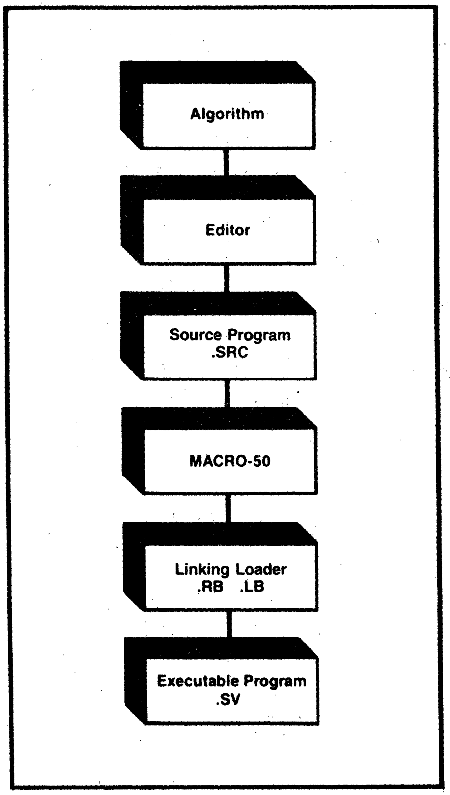

- **Libraries of Modules Simplify Program Development, Editing, Loading, and Linking**
- **Utilities to Aid in Downloading Code to RAM, PROM Programmer, or EPROM**
- **Absolute or Relocatable Object Code Offers Flexibility in Programming and File Manipulation**
- **Complete Macro Definition and Expansion Capabilities:**
  - **Symbolic (Character Mnemonic) Instructions Clarify Program Logic, Operations, and Sequences**
  - **Symbolic Addresses Create Consistent Data and Memory References and Help Debugging Tasks**
  - **Symbolic Parameters (Data, I/O Port Addresses) Provide Single-Location Changes and Adaptations to Global Macros**
- **Comment and Automatic Cross-Reference Capabilities Simplify Design, Debugging and Modification**
- **Pseudo-Ops Help Define Codes for New Instruction Mnemonics**
- **Choice of Single- or Double-Precision Numbers**
- **Simple Object Code Converter (SVTOLDM) Allows Use of Government-Owned F9450 Simulator (Not Fairchild-Supplied)**
- **Operates under VAX/VMS Version 3.2 or Later**

Fairchild Semiconductor Corporation
Microcontroller Division
450 National Avenue, Mt. View, CA 94043
(415) 962-3888 TWX: 910-379-5091

© 1985 Fairchild Printed in U.S.A. August 1985 7.5M

Fairchild reserves the right to make changes in the circuitry or specifications at any time without notice.

Special Products

Microprocessors

Device	Description
MB8840 Series	4-Bit Microcomputer NMOS
MB8850 Series	4-Bit Microcomputer CMOS
MB88200 Series	4-Bit Microcomputer CMOS
MB88400 Series	4-Bit Microcomputer NMOS
MB88410 Series	4-Bit Microcomputer NMOS
MB88420 Series	4-Bit Microcomputer NMOS
MB88500 Series	4-Bit Microcomputer CMOS
MB88540 Series	4-Bit Microcomputer CMOS
MBL8031AH	8-Bit Microcomputer 4KB ROM, 256B RAM
MBL8051AH	8-Bit Microcomputer, 256B RAM
MBL8042	Universal Peripheral Interface 2KB ROM, 64B RAM
MBL8048	8-Bit Microcomputer 1KB ROM, 64B RAM
MBL8035	8-Bit MCU (EVAL), 64B RAM
MBL8C49	8-Bit Microcomputer 2KB ROM, 128B RAM

Device	Description
MBL8039	8-Bit MCU (EVAL), 128B RAM
MBL80C49	CMOS Single Chip 8-Bit Microcomputer
MBL80C39	CMOS Single Chip 8-Bit MCU (EVAL)
MBL8041	Universal Peripheral Interface 1KB ROM, 64B RAM
MBL8649	8-Bit Microcomputer
MBL8742	8-Bit Microcomputer – EPROM Version
MBL8749	8-Bit Microcomputer – EPROM Version
MBL8086/-1/-2	16-Bit NMOS Microprocessor
MBL8088/-2	8-Bit NMOS Microprocessor
MBL8089/-2	8-Bit NMOS I/O Processor
MBL80188	8 Bit NMOS MPU
MBL80186	16 Bit NMOS MPU
MBL80286	16 Bit NMOS MPU

Peripherals

MB502AZ	Ethernet Manchester Encoder/Decoder
MB8795ARR	Ethernet Data Link Controller
MB60212	CODEC
MB6022	CODEC
MB6024	CODEC
MB88303P	NMOS Television Display Controller
MB88304/5	NMOS 4/8-Bit I/O Expander
MB88306/7	CMOS Output Expander
MB88308/9	CMOS Output Expander
MB89311	Floppy Disk Controller
MB88315	CMOS LCD Common Driver
MB88316/7	CMOS LCD Segment Driver
MB89321	CMOS CRT Controller
MB89322	CMOS CRT Controller
MBL8259A/-2	NMOS Programmable Interrupt Con.
MBL8282	Bipolar Octal Latch
MBL8283	Bipolar Octal Latch
MBL8284A	Clock Generator and Driver
MBL8286	Bipolar Octal Bus Transceiver
MBL8287	Bipolar Octal Bus Transceiver
MBL8288	Bus Controller
MBL8289	Bus Arbiter
MBL8243	Input/Output Expander
MBL82C43	CMOS Input/Output Expander
MBL82284	Clock Gen
MBL82288	Bus Controller
MB87001	CMOS Serial Input PLL Frequency Synthesizer System Block

MB87003	DTMF/Pulse Dialer
MB87004	DTMF/Pulse Dialer
MB8868A	MOS UART (Universal Asynchronous Receiver Transmitter)
MB8876A	Floppy Disk Formatter/Controller (Negative Logic 8-Bit Data Bus)
MB8877A	Floppy Disk Formatter/Controller (Positive Logic 8-Bit Data Bus)
MB4107	Variable Frequency Oscillator for FDC
MB501 501L 503 504	Two Modulus Prescaler
MB8764CR	Digital Signal Processor (DSP)
MB1412AC	8-Bit Slice ECC LSI (LS-TTL Error Checking & Correction Circuit
MB1426	16-Bit ECC
MB3712	Power AMP
MB3713	Power AMP
MB3714	Power AMP
MB3730	12W BTL Audio AMP
MB3731	18W BTL Audio AMP
MB3752	Voltage Regulator
MB3759	Pulse Width Modulation (PWM) Control Circuit
MB3760	PWM Control Circuit

Converters

MB40547-7/-8	8-Bit Ultra High Speed A/D Converter
MB40576	6-Bit Ultra High Speed Video A/D Converter
MB40748-8/-9	10-Bit Ultra High Speed D/A Converter
MB40776	6-Bit Ultra High Speed D/A Converter
MB40778	8-Bit High Speed D/A Converter

MB40788	10-Bit Ultra High Speed D/A Converter
MB88301A	6-Bit PWM NMOS D/A Converter
MB4052	4 Channel 8-Bit A/D Converter
MB4053/4063	6 Channel 8-Bit A/D Converter Subsystem
MB4072	8-Bit High Speed Multiplying D/A Converter

Fujitsu Microelectronics, Inc.
3320 Scott Boulevard
Santa Clara, CA 95051
(408) 727-1700

FMI Sales Offices. Atlanta 404) 449-8539. Austin 512) 343-0320. Boston 617) 964-7080. Chicago 312) 885-1500. Dallas 214) 669-1616. Houston 713) 784-7111. Minneapolis 612) 454-0323. New York 516) 361-6565. No. Calif. 408) 866-5600. So. Calif. 714) 720-9688. © 1984 Fujitsu Microelectronics, Inc.

Z80 FAMILY

■ Z80® CPU/Central Processing Unit

Part Number	Features
Z8400	• 158 instructions, 8080A software compatibility • 8 MHz, 6 MHz, 4 MHz and 2.5 MHz clocks for the Z80H, Z80B, Z80A and Z80 • The extensive instruction set includes string, bit, byte, and word operations. Block searches and block transfers together with indexed and relative addressing. • The Z80 microprocessors and associated family of peripheral controllers are linked by a vectored interrupt system to be daisy-chained. • Duplicate sets of both general-purpose and flag registers, two 16-bit index registers. • On-chip dynamic memory refresh counter.

■ Z80® PIO/Parallel Input/Output Controller

Part Number	Features
Z8420	• A direct interface between Z80 microcomputer systems and peripheral devices. • Both ports have interrupt-driven handshake for fast response. • 4 programmable operating modes: byte input, byte output, byte input/output (Port A only), and bit input/output. • Programmable interrupts on peripheral status conditions. • Standard Z-80 Family bus-request and prioritized interrupt-request daisy chains implemented with out external logic. • 8 Port B outputs can drive Darlington transistors (1.5mA at 1.5V).

■ Z80® CTC/Counter/Timer Circuit

Part Number	Features
Z8430	• Four independently programmable counter/timer channels • Zero Count/Timeout outputs capable of driving Darlington transistors. • Selectable positive or negative trigger initiates timer operation. • Standard Z-80 Family daisy-chain interrupt structure. • Interfaces directly to the Z-80 CPU or for baud rate generation to the Z-80 SIO.

■ Z80® SIO/Serial Input/Output Controller

Part Number	Features
Z8440	• 2 independent full-duplex channels, with separate control and status lines for modems or other devices. • Data rates of 0 to 800K bits/second in the × 1 clock mode. • Synchronous protocols and Asynchronous protocols. • Receiver data registers quadruply buffered transmitter registers doubly buffered. • Highly sophisticated and flexible daisy chain interrupt vector

■ Z80® DART/Dual Asynchronous Receiver/Transmitter

Part Number	Features
Z8470	• 2 independent full-duplex channels with separate modem controls. • In × 1 clock mode, data rates are 0 to 800K bits/second with Z80A DART. • Receiver data registers are quadruply buffered; the transmitter is doubly buffered. • Programmable options include 1½ or 2 stopbits; even, odd or no parity: and × 1, × 16, × 32 and × 64 clock modes. • On-chip logic for ring indication and carrier detect status.

GSS

HEAD OFFICE
#60-1, CHOONGMU-RO, 3KA CHOONG-KU, SEOUL, KOREA
C.P.O. BOX 9495, SEOUL, KOREA
TEL: 273-4141-9, 4151-9 (EXT) 3071, 3112 (DIR) 274-3219
TLX: GOLDSEC 22767 FAX: 273-3062

SUNNYVALE OFFICE
#1130 EAST ARQUES AVENUE SUNNYVALE, CA94086
TEL: (408) 737-8575, TLX: 176835 LKYGS SUVL
FAX: (408) 737-0186

GOULD

AMI Semiconductors

Preliminary Data Sheet **S65C51**

ASYNCHRONOUS COMMUNICATION INTERFACE ADAPTER

Features

- ☐ On-Chip Baud Rate Generator: 15 Programmable Baud Rates Derived from a Standard 1.8432MHz External Crystal (50 to 19,200 Baud)
- ☐ Programmable Interrupt and Status Register to Simplify Software Design
- ☐ Single +5 Volt Power Supply
- ☐ Serial Echo Mode
- ☐ False Start Bit Detection
- ☐ 8-Bit Bi-Directional Data Bus for Direct Communication With the Microprocessor
- ☐ External 16X Clock Input for Non-Standard Baud Rates (Up to 125K Baud)
- ☐ Programmable: Word Lengths; Number of Stop Bits; and Parity Bit Generation and Detection
- ☐ Data Set and Modem Control Signals Provided
- ☐ Parity: (Odd, Even, None, Mark, Space)
- ☐ Full-Duplex or Half-Duplex Operation
- ☐ 5, 6, 7, 8 and 9-Bit Transmission

General Description

The S65C51 is a CMOS Asynchronous Communication Adapter (ACIA) intended to provide interfacing for the microprocessors to serial communication data sets and modems. A unique feature is the inclusion of an on-chip programmable baud rate generator, with a crystal being the only external component required.

Block Diagram

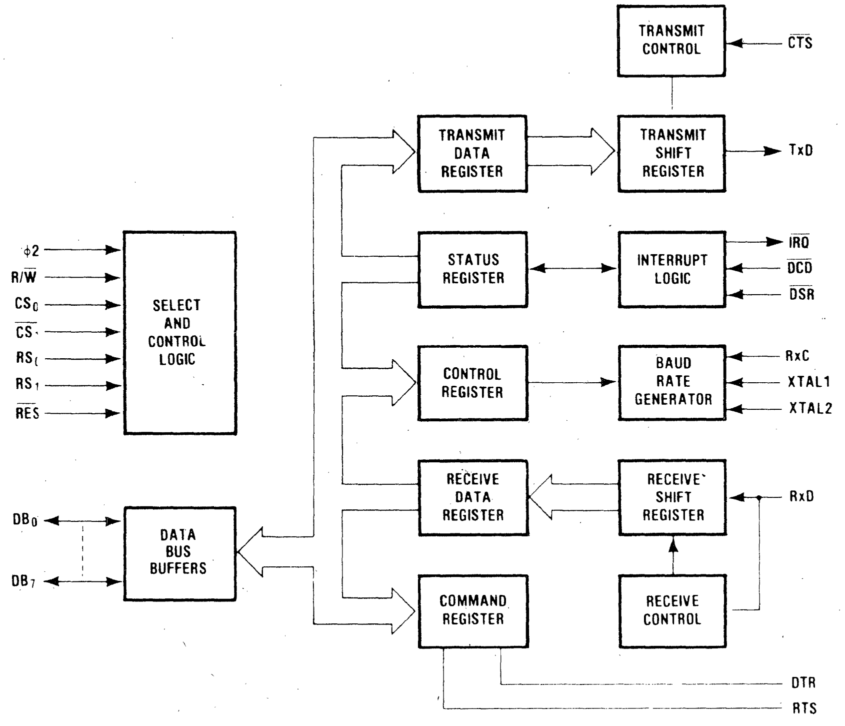
TRANSMIT CONTROL
CTS
TRANSMIT DATA REGISTER
TRANSMIT SHIFT REGISTER
TxD
φ2
R/W
CS0
CS1
RS0
RS1
RES
SELECT AND CONTROL LOGIC
STATUS REGISTER
INTERRUPT LOGIC
IRQ
DCD
DSR
CONTROL REGISTER
BAUD RATE GENERATOR
RxC
XTAL1
XTAL2
DB0
DB7
DATA BUS BUFFERS
RECEIVE DATA REGISTER
RECEIVE SHIFT REGISTER
RxD
COMMAND REGISTER
RECEIVE CONTROL
DTR
RTS

Pin Configuration

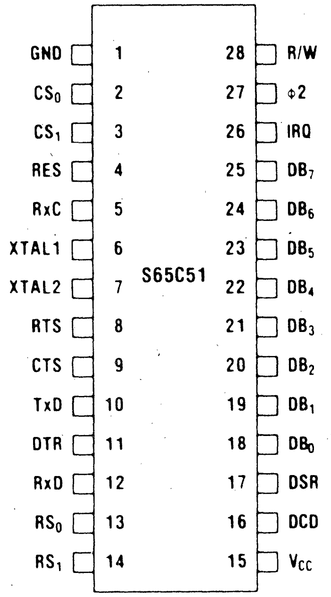
GND 1
CS0 2
CS1 3
RES 4
RxC 5
XTAL1 6
XTAL2 7
RTS 8
CTS 9
TxD 10
DTR 11
RxD 12
RS0 13
RS1 14
S65C51
28 R/W
27 φ2
26 IRQ
25 DB7
24 DB6
23 DB5
22 DB4
21 DB3
20 DB2
19 DB1
18 DB0
17 DSR
16 DCD
15 VCC

ADVERTISERS' PRODUCT INDEX

Device	Page-Line
7-25	★ 4338
	4118-20
	★ 4335
	4117-99
764A-17	★ 4335
	4117-100
764A-2	★ 4335
	4118-2
AM2764A-20	★ 4335
	4118-3
AM2764A-25	★ 4335
	4118-21
AM2764A-3	★ 4335
	4118-39
AM2764A-30	★ 4335
	4118-40
AM2764A-4	★ 4335
	4118-61
AM2802C	4143-7
AM2802M	4143-8
AM2803C	4143-13
AM2803M	4143-14
AM2804C	4143-17
AM2804M	4143-18
AM2809C	4146-51
AM2809M	4146-49
AM2812AC	4108-20
AM2812AL	4108-21
AM2812C	4108-17
AM2812L	4108-18
AM2813AC	4108-25
AM2813AL	4108-26
AM2813C	4108-22
AM2813L	4108-23
AM2833C	4146-72
AM2833M	4146-73
AM2841A	4108-41
AM2841C	4108-36
AM2841M	4108-37
AM2847C	4146-40
AM2847M	4146-37
AM2855	4146-52
AM2856	4146-59
AM2857C	4146-62
AM29LS18	★ 1813
	855-182
AM29L509	846-2
AM29L509	1642-126
AM29L510	846-7
AM29L510	1642-128
AM29L516	★ 1001
	845-167
	★ 1001
AM2903	★ 1802
	1607-5
2903AC	★ 1802
	1642-45
AM2903AM	★ 1802
	1642-46
2903C	★ 1802
	846-22
	★ 1802
	1642-47
AM2903M	★ 1802
	846-23
	★ 1802
	1642-48
AM2904C	★ 1804
	1642-92
AM2904M	★ 1804
	1642-93
AM2905C	★ 1805
	3179-50
	★ 1805
	1642-55
AM2905M	★ 1805
	3179-43
	★ 1805
	1642-56
AM2906C	★ 1805
	3179-51
	★ 1805
	1642-57
AM2906M	★ 1805
	3179-44
	★ 1805
	1642-58
AM2907C	★ 1805
	3179-48
	★ 1805
	1642-59
AM2907M	★ 1805
	3179-41
	★ 1805
	1642-60
AM2908C	★ 1806
	3179-49
AM2908M	★ 1806
	3179-42
AM2909A	★ 1807
	877-26
AM2909AC	★ 1807
	1642-114
AM2909C	★ 1807
	877-27
	★ 1807
	1642-115
AM2909M	★ 1807
	877-28
AM2910C	★ 1808
	1656-43
AM2910M	★ 1808
	1656-44
AM2911A	★ 1807
	877-29
	★ 1807
	1642-116
	★ 1807
	877-30
	★ 1807
	877-31
	★ 1823
	1656-49
	★ 1824
	1635-23
	¶ 362-8
	¶ 370-16
	★ 1809
	3178-64
	★ 1809
	1642-61
	★ 1809
	3178-65
	1809
	878-176
	374-6
	1809
	1642-140
	1809
	878-177
	1
	7
	d)
AM2914C	1661-124
	¶ 374-6
AM2914M	★ 1810
	1642-138
	1661-125
AM2915AC	★ 1811
	3178-45
	★ 1811
	1642-62
AM2915AM	★ 1811
	3178-21
	★ 1811
	1642-63
AM2916AC	★ 1811
	3178-47
	★ 1811
	1642-64
AM2916AM	★ 1811
	3178-22
	★ 1811
	1642-65
AM2917AC	★ 1812
	3178-48
	★ 1812
	1642-66
AM2917AM	★ 1812
	3178-23
	★ 1812
	1642-67
AM2918C	★ 1813
	855-177
	★ 1813
	1643-15
AM2918M	★ 1813
	855-178
	★ 1813
	1643-16
AM2919C	★ 1813
	855-45
	★ 1813
	1643-10
AM2919M	★ 1813
	855-46
	★ 1813
	1643-11
AM2920C	★ 1814
	856-128
	★ 1814
	1643-22
AM2920M	★ 1814
	856-129
	★ 1814
	1643-23
AM29203	★ 1802
	846-24
	★ 1802
	1607-6
AM2921C	★ 1814
	852-131
	★ 1814
	1643-36
AM2921M	★ 1814
	852-132
	★ 1814
	1643-37
AM2922C	★ 1815
	870-13
	★ 1815
	1643-52
AM2922M	★ 1815
	870-14
	★ 1815
	1643-53
AM2923C	★ 1815
	870-57
	★ 1815
	1643-54
AM2923M	★ 1815
	870-58
AM2924C	★ 1816
	853-163
	★ 1816
	1642-79
AM2924M	★ 1816
	853-164
AM2925C	★ 1816
	1642-76
AM2925M	★ 1816
	1642-77
AM2926C	★ 1817
	1643-8

NEW-RECEIVE DATA FAST!

Dear IC MASTER User:

ANNOUNCING... A **new**, innovative way to request and receive up-to-date IC product data.

The IC MASTER introduces an IMMEDIATE response system. Operational **24 hours a day, 7 days a week,** you can now phone in your requests for the most current IC product data available from IC manufacturers who have product data sheets in the IC MASTER, at no cost to you. Here's all you do:

Step 1 **Phone 800-443-0100** and ask for Extension #518

Step 2 When asked, simply tell the operator the name(s) of the manufacturer whose part you are interested in... the **specific** part number you want information on... if you want a data sheet and/or an application note... and if you want a salesperson to call.

Step 3 Provide your name, title, company, address, and phone number.

That's all you do! We do the rest. Your request will be in the hands of the company you inquired about within 24 hours. We will follow up within a week to make sure your request was expedited and your needs were met.

It's important to us that we provide you with the best source of up-to-date IC product data available in the market... we've been doing it for over ten years, and we aren't stopping now.

We hope this **added new** service will contribute to a further reduction in your IC selection time.

800-
443-
0100
518 EXT.

G65SCXX Series
G65SC1XX Series

Microcircuits

CMOS G65SCXXX 8-Bit Microprocessor Family

Features

- CMOS family that is compatible with NMOS 6500 series microprocessors
- Uses single +5 volt power supply
- Low power consumption (4mA @ 1 MHz) allows battery-powered operation
- Enhanced instruction set: 27 additional op codes encompassing eight new instructions enhance software performance compared to existing NMOS 6500 microprocessor instruction set
  - —64 microprocessor instructions
  - —178 operational codes
  - —15 addressing modes
- Choice of 4K, 8K or 65K-byte addressable memory
- 1, 2, 3 or 4 MHz operation
- Choice of external or on-board clock generator operation
- On-board clock generator/oscillator can be driven by an external single-phase clock input, an RC network, or a crystal circuit
- Advanced memory access timing ($\phi 4$) on selected versions
- Early address valid allows use with slower memories
- Early write data for dynamic memories
- 8-bit parallel processing
- Decimal and binary arithmetic
- Pipeline architecture
- Programmable stack pointer
- Variable length stack
- Interrupt capability
- Non-maskable interrupt
- 8-bit bidirectional data bus
- "Ready" input (for single cycle execution)
- Direct memory access capability
- Bus compatible with M6800
- Available on selected versions, a memory lock output and bus enable input signals simplify multiprocessor designs
- Available in either 28 or 40 pin dual-in-line packaging

General Description

The G65SCXXX is a totally software-compatible microprocessor family manufactured using the state-of-the-art silicon gate CMOS process. The family consists of two series of devices: one series, designated G65SCXX is pin-to-pin compatible with NMOS versions of the 6500 currently on the market; the other series, designated G65SC1XX includes several enhancements not available with other designs. The family provides the designer with a wide selection of addressable memory ranges, on-board or external clocks, and input interrupt options. All of the microprocessors are software compatible within the group and all are bus compatible with MC6800 products.

As shown in Table I, the family includes 18 microprocessors of which three have on-chip oscillators while the others require an external clock generator. The G65SC02, G65SC102 or G65SC112 clock generator circuit may be driven by an external crystal, an RC network or by an external clock source. The versions of the microprocessor which require an external clock source are generally intended for multiprocessor applications where maximum timing control is necessary. The three family members with on-chip oscillators are intended for high performance, low cost operations where single phase inputs, crystals, or RC inputs provide the time base.

Ten of the microprocessors in the G65SCXX Series are pin-to-pin compatible with the NMOS 6500 microprocessors offered by several other manufacturers. However, the use of the leading-edge CMOS process technology ensures several software or programming enhancements not available to users of the NMOS 6500. The enhancements include two additional addressing modes, an expanded microprocessor instruction set (from 56 to 64 instructions), and expanded operational codes (from 151 to 178). In addition, a series of operational enhancements are provided which materially improve the effective use of the microprocessor. These enhancements are explained in Table V of the section of this data sheet devoted to system software and programming. This series of microprocessors provides the user an architecture and instruction set with which he is basically familiar (6502), the several operational enhancements notwithstanding, plus all of the advantages of leading edge CMOS technology; i.e., increased noise immunity, higher reliability, and greatly reduced power consumption.

TABLE I. G65SCXXX FAMILY MICROPROCESSOR CAPABILITIES

ITEM NO.	PART NUMBER	DIP PINS	ADDRESSABLE MEMORY (BYTES)	ON-BOARD CLOCK OSCILLATOR (SEE NOTE)	EXTERNAL CLOCK GENERATOR REQUIRED	ADVANCED MEMORY ACCESS ($\phi 4$)	$\overline{\text{IRQ}}$	$\overline{\text{NMI}}$	$\overline{\text{SO}}$	DBE	BE	SYNC	RDY	$\overline{\text{ML}}$	$\overline{\text{RES}}$
1	G65SC02	40	65K	•			•	•	•			•	•		•
2	G65SC03	28	4K		•		•	•							•
3	G65SC04	28	8K		•		•								•
4	G65SC05	28	4K		•		•						•		•
5	G65SC06	28	4K		•		•								•
6	G65SC07	28	8K		•								•		•
7	G65SC12	40	65K		•		•	•	•	•		•			•
8	G65SC13	28	4K		•		•	•							•
9	G65SC14	28	8K		•		•								•
10	G65SC15	28	4K		•		•						•		•
11	G65SC102	40	65K	•		•	•	•	•		•	•	•	•	•
12	G65SC103	28	4K		•	•	•	•							•
13	G65SC104	28	8K		•	•	•								•
14	G65SC105	28	4K		•	•	•						•		•
15	G65SC106	28	4K		•	•	•								•
16	G65SC107	28	8K		•	•							•		•
17	G65SC112	40	65K	•			•	•	•		•	•	•	•	•
18	G65SC115	28	4K		•		•						•	•	•

NOTE: These devices can operate in any of the following clock generation modes: 1. External crystal 2. External RC network 3. $\phi 0$(IN) from external clock source

G65SC150

Microcircuits

CMOS Communications Terminal Unit (Telecommunication Microcomputer)

Features

- Generates signals compatible with switched telephone networks or packet switched data networks
- Provides Dial Pulse (DP), Dual Tone Multi-Frequency (DTMF), and 0-600 baud modem signaling capabilities
- Low power mode (300 μA) enables telephone line-powered operation
- External microprocessor address and data bus facilitates memory and I/O expansion
- On-chip memory: 2K bytes ROM
  64 bytes RAM
- Standard DTMF and modem frequencies can be generated which are accurate to ±1.0% with a 3.58 MHz crystal
- Two sine wave generators
- 6800 and 6500 bus compatibility
- Utilizes G65SC00 microprocessor as CPU
- 27 TTL compatible I/O lines
- Bus expandable to address 65K bytes of external memory
- Single +5 volt power supply
- Available in 68-pin chip carriers

General Description

The GTE G65SC150 Communications Terminal Unit (CTU) is a single chip telecommunications microcomputer manufactured using state-of-the-art silicon gate CMOS process technology, which is optimized for telephone line signaling and data transmission applications. A functional block diagram is shown which illustrates the major system functions that are included on the integrated circuit.

The CTU uses the GTE G65SC00 8-bit microprocessor which executes the complete G65SC00 series instruction set. With 2K bytes of ROM and 64 bytes of RAM, the CTU operates as a single-chip microcomputer.

The internal bus interconnects all microcomputer functions. The address and data bus buffers permit expansion of ROM, RAM and memory mapped I/O using the full 65K addressing space of the microprocessor. A peripheral mode is available for use with multiprocessor systems. A test and prototyping mode switches internal ROM addresses to external access. An on-chip oscillator may be driven by an external clock source.

The telecommunications interface circuitry consists of a timer, row/receive counter, column/transmit counter and dual sine wave generators. In addition, 27 general purpose I/O lines can be used for keyboard, telephone Dial Pulse (DP) signaling, phone line control, and other peripheral devices.

Block Diagram

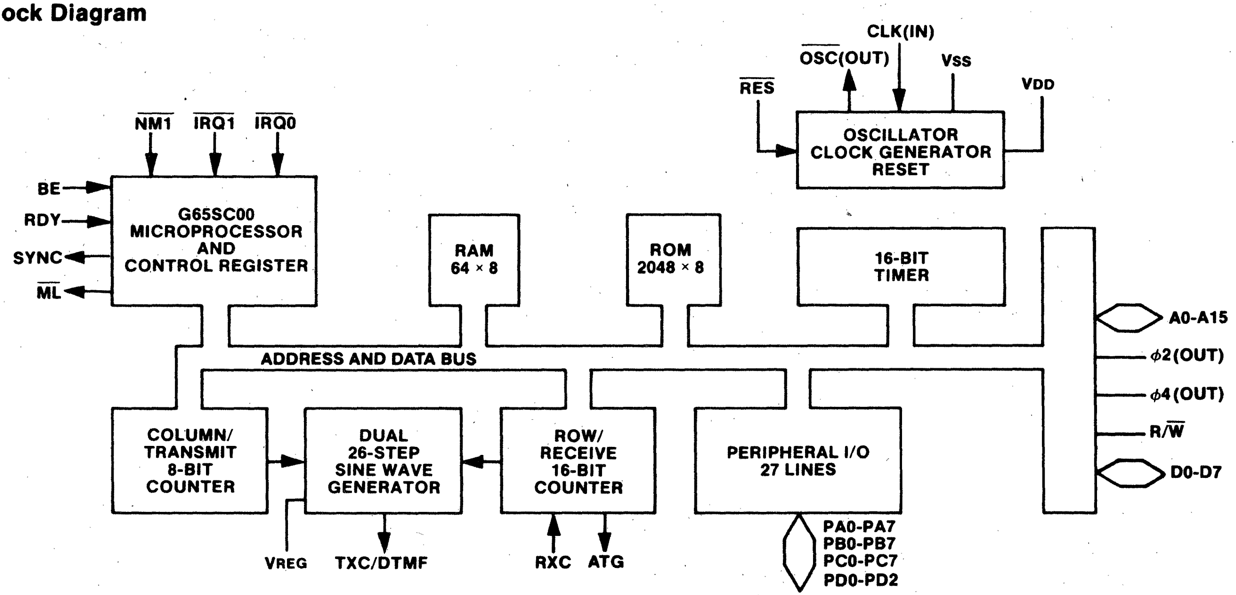
CLK(IN)
$\overline{\text{OSC}}$(OUT)
VSS
$\overline{\text{RES}}$
VDD
OSCILLATOR
CLOCK GENERATOR
RESET
$\overline{\text{NMI}}$
$\overline{\text{IRQ1}}$
$\overline{\text{IRQ0}}$
BE
RDY
SYNC
$\overline{\text{ML}}$
G65SC00
MICROPROCESSOR
AND
CONTROL REGISTER
RAM
64 × 8
ROM
2048 × 8
16-BIT
TIMER
A0-A15
φ2(OUT)
φ4(OUT)
R/$\overline{\text{W}}$
D0-D7
ADDRESS AND DATA BUS
COLUMN/
TRANSMIT
8-BIT
COUNTER
DUAL
26-STEP
SINE WAVE
GENERATOR
ROW/
RECEIVE
16-BIT
COUNTER
PERIPHERAL I/O
27 LINES
VREG
TXC/DTMF
RXC
ATG
PA0-PA7
PB0-PB7
PC0-PC7
PD0-PD2

GTE

G65SC802
G65SC816

Microcircuits

CMOS 8-Bit/16-Bit Microprocessor Family

Features

- Advanced CMOS design for low power consumption and increased noise immunity
- Emulation mode for total software compatibility with 6502 designs
- Full 16-bit ALU, Accumulator, Stack Pointer, and Index Registers
- Direct Register for "zero page" addressing
- 24 addressing modes (including 13 original 6502 modes)
- Wait for Interrupt (WAI) and Stop the Clock (STP) instructions for reduced power consumption and decreased interrupt latency
- 91 instructions with 255 opcodes
- Co-Processor (COP) instruction and associated vector
- Powerful Block Move instructions

Features (G65SC802 Only)

- 8-Bit Mode with both software and hardware (pin-to-pin) compatibility with 6502 designs (64 KByte memory space)
- Program selectable 16-bit operation
- Choice of external or on-board clock generation

Features (G65SC816 Only)

- Full 16-bit operation with 24 address lines for 16 MByte memory
- Program selectable 8-Bit Mode for 6502 coding compatibility.
- Valid Program Address (VPA) and Valid Data Address (VDA) outputs for dual cache and DMA cycle steal implementation
- Vector Pull ($\overline{\text{VP}}$) output indicates when interrupt vectors are being fetched. May be used for vectoring/prioritizing interrupts
- Abort interrupt and associated vector for interrupting any instruction without modifying internal registers
- Memory Lock ($\overline{\text{ML}}$) for multiprocessor system implementation

General Description

The G65SC802 and G65SC816 are ADV-CMOS (ADVanced CMOS) 16-bit microprocessors featuring total software compatibility with 8-bit NMOS and CMOS 6500 series microprocessors. The G65SC802 is pin-to-pin compatible with 8-bit 6502 devices currently available, while also providing full 16-bit internal operation. The G65SC816 provides 24 address lines for 16 MByte addressing, while providing both 8-bit and 16-bit operation.

Each microprocessor contains an Emulation (E) mode for emulating 8-bit NMOS and CMOS 6500-Series microprocessors. A software switch determines whether the processor is in the 8-bit emulation mode or in the Native 16-bit mode. This allows existing 8-bit system designs to use the many powerful features of the G65SC802 and G65SC816.

The G65SC802 and G65SC816 provide the system engineer with many powerful features and options. A 16-bit Direct Page Register is provided to augment the Direct Page addressing mode, and there are separate Program Bank Registers for 24-bit memory addressing. Other valuable features include:

- An Abort input which can interrupt the current instruction without modifying internal registers.
- Valid Data Address (VDA) and Valid Program Address (VPA) outputs which facilitate dual cache memory by indicating whether a data or program segment is being accessed.
- Vector modification by simply monitoring the Vector Pull ($\overline{\text{VP}}$) output.
- Block Move instructions.

GTE Microcircuits' G65SC802 and G65SC816 microprocessors offer the design engineer a new freedom of design and application, and the many advantages of state-of-the-art ADV-CMOS technology.

Simplified Block Diagram

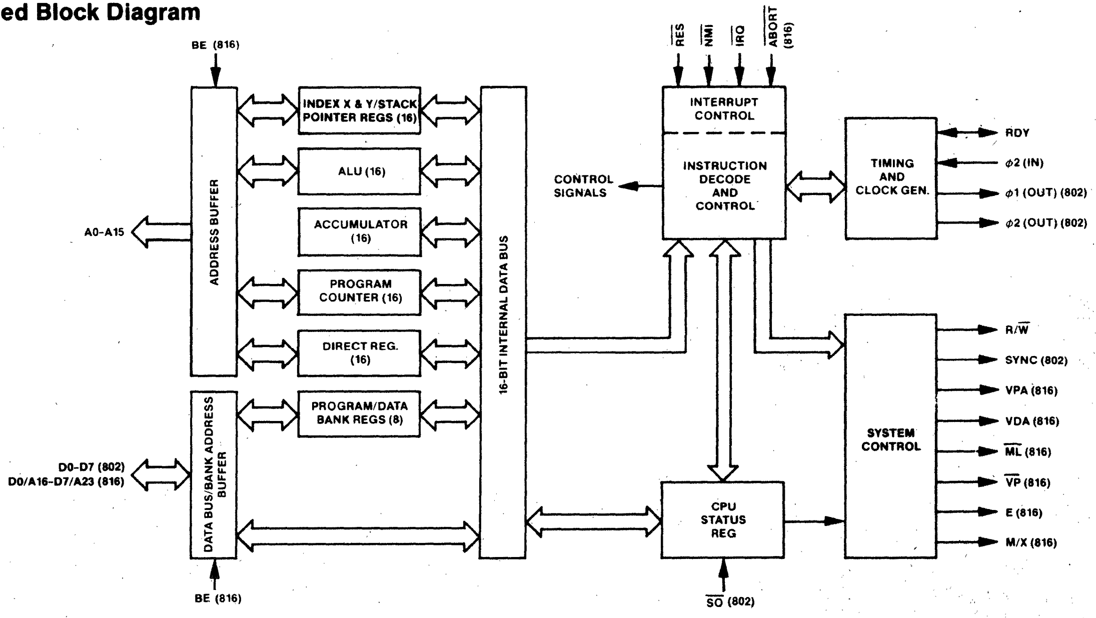
BE (816)
ADDRESS BUFFER
A0-A15
INDEX X & Y/STACK POINTER REGS (16)
ALU (16)
ACCUMULATOR (16)
PROGRAM COUNTER (16)
DIRECT REG. (16)
PROGRAM/DATA BANK REGS (8)
DATA BUS/BANK ADDRESS BUFFER
D0-D7 (802)
D0/A16-D7/A23 (816)
BE (816)
16-BIT INTERNAL DATA BUS
$\overline{\text{RES}}$
$\overline{\text{NMI}}$
$\overline{\text{IRQ}}$
$\overline{\text{ABORT}}$ (816)
INTERRUPT CONTROL
INSTRUCTION DECODE AND CONTROL
CONTROL SIGNALS
TIMING AND CLOCK GEN.
RDY
φ2 (IN)
φ1 (OUT) (802)
φ2 (OUT) (802)
SYSTEM CONTROL
R/$\overline{\text{W}}$
SYNC (802)
VPA (816)
VDA (816)
$\overline{\text{ML}}$ (816)
$\overline{\text{VP}}$ (816)
E (816)
M/X (816)
CPU STATUS REG
$\overline{\text{SO}}$ (802)

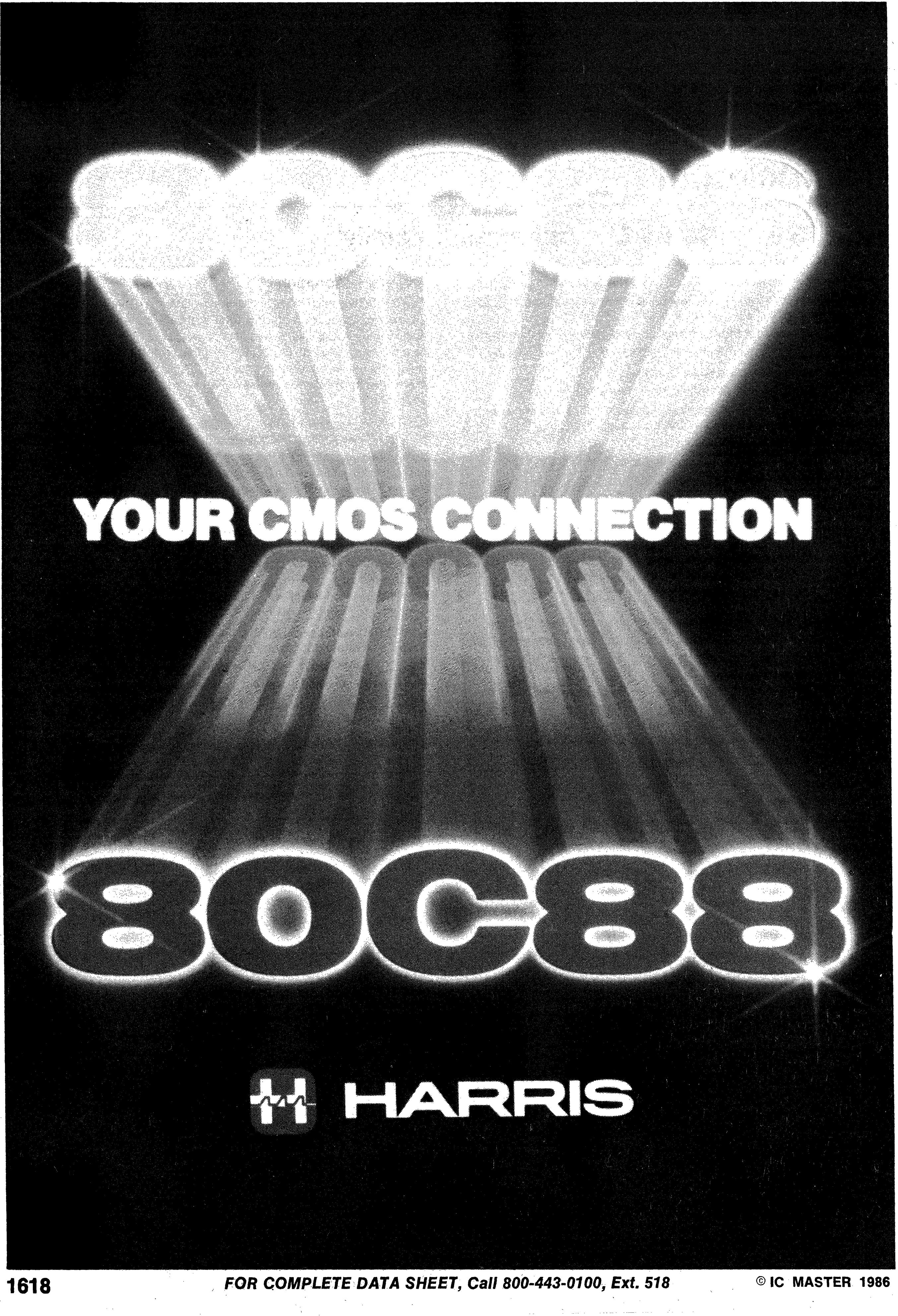
80C88
YOUR CMOS CONNECTION
80C88
HARRIS

CMOS 8/16-BIT MICROPROCESSORS

16-Bit Microprocessor		Pinout
Part Number	**Features**	
80C86	• Compatible with NMOS 8086 • Low power operation: — 10 mA/MHz operating current — 500 μA standby current • Static design: DC to 5 MHz operation DC to 8 MHz operation	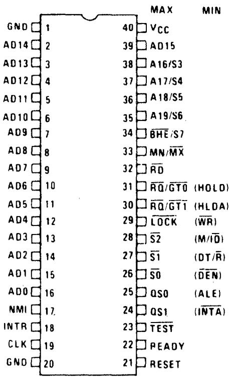

MAX
MIN
GND 1
AD14 2
AD13 3
AD12 4
AD11 5
AD10 6
AD9 7
AD8 8
AD7 9
AD6 10
AD5 11
AD4 12
AD3 13
AD2 14
AD1 15
AD0 16
NMI 17
INTR 18
CLK 19
GND 20
40 VCC
39 AD15
38 A16/S3
37 A17/S4
36 A18/S5
35 A19/S6
34 BHE/S7
33 MN/MX
32 RD
31 RQ/GT0 (HOLD)
30 RQ/GT1 (HLDA)
29 LOCK (WR)
28 S2 (M/IO)
27 S1 (DT/R)
26 S0 (DEN)
25 QS0 (ALE)
24 QS1 (INTA)
23 TEST
22 READY
21 RESET

8-Bit Microprocessor		Pinout
Part Number	**Features**	
80C88	• Compatible with NMOS 8088 • Low power operation: — 10 mA/MHz operating current — 500 μA standby current • Static design: DC to 5 MHz operation DC to 8 MHz operation • Software compatible with 80C86/8086/8088	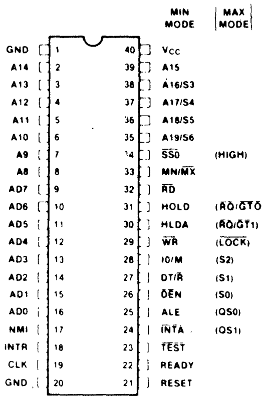

MIN MODE
MAX MODE
GND 1
A14 2
A13 3
A12 4
A11 5
A10 6
A9 7
A8 8
AD7 9
AD6 10
AD5 11
AD4 12
AD3 13
AD2 14
AD1 15
AD0 16
NMI 17
INTR 18
CLK 19
GND 20
40 VCC
39 A15
38 A16/S3
37 A17/S4
36 A18/S5
35 A19/S6
34 SS0 (HIGH)
33 MN/MX
32 RD
31 HOLD (RQ/GT0)
30 HLDA (RQ/GT1)
29 WR (LOCK)
28 IO/M (S2)
27 DT/R (S1)
26 DEN (S0)
25 ALE (QS0)
24 INTA (QS1)
23 TEST
22 READY
21 RESET

MICROPROCESSOR/PERIPHERAL SELECTION GUIDE

MICROPROCESSOR ARCHITECTURE	8080A	8085A 80C85 NSC800 Z80	80C86 8086	80C88 8088	80286
KEY PERIPHERAL SUPPORT CHIPS					
Serial Datacomm		82C52	82C52	82C52	
Timer/Counter	82C54	82C54	82C54	82C54	82C54
Parallel I/O	82C55A	82C55A	82C55A	82C55A	82C55A
Interrupt Controller	82C59A	82C59A	82C59A	82C59A	82C59A
DMA Controller		82C37A	82C37A	82C37A	
Data Bus Latch	82C82/83H	82C82/83H	82C82/83H	82C82/83H	82C82/83H
Data Bus Transceiver		82C86H/87H	82C86H/87H	82C86H/87H	82C86H/87H
Clock Generator			82C84A 82C85	82C84A 82C85	
System Controller			82C88	82C88	
Bus Arbiter			82C89	82C89	

CMOS PERIPHERAL CIRCUITS

DMA Controller

Part Number	Features
82C37A	• Compatible with NMOS 8237A • Provides control for direct memory access operation • Up to 1.6 Mb/s transfer rate • Four independently programmable DMA channels • Low power operation

Pinout

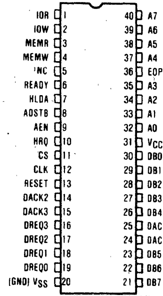
IOR 1
IOW 2
MEMR 3
MEMW 4
NC 5
READY 6
HLDA 7
ADSTB 8
AEN 9
HRQ 10
CS 11
CLK 12
RESET 13
DACK2 14
DACK3 15
DREQ3 16
DREQ2 17
DREQ1 18
DREQ0 19
(GND) V_{SS} 20
40 A7
39 A6
38 A5
37 A4
36 EOP
35 A3
34 A2
33 A1
32 A0
31 V_{CC}
30 DB0
29 DB1
28 DB2
27 DB3
26 DB4
25 DACK0
24 DACK1
23 DB5
22 DB6
21 DB7

Asynchronous Communication Element

Part Number	Features
82C50A	• Complete serial communication interface — UART/Bit rate generator • 80C86/88 compatible • DC to 10 MHz operation • Modem interface • Low CMOS power dissipation • Compatible with NMOS 8250A

Pinout

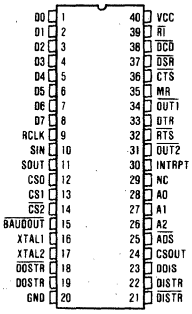
D0 1
D1 2
D2 3
D3 4
D4 5
D5 6
D6 7
D7 8
RCLK 9
SIN 10
SOUT 11
CS0 12
CS1 13
$\overline{CS2}$ 14
$\overline{BAUDOUT}$ 15
XTAL1 16
XTAL2 17
$\overline{DOSTR}$ 18
DOSTR 19
GND 20
40 VCC
39 $\overline{RI}$
38 $\overline{DCD}$
37 $\overline{DSR}$
36 $\overline{CTS}$
35 MR
34 $\overline{OUT1}$
33 $\overline{DTR}$
32 $\overline{RTS}$
31 $\overline{OUT2}$
30 INTRPT
29 NC
28 A0
27 A1
26 A2
25 $\overline{ADS}$
24 CSOUT
23 DDIS
22 DISTR
21 $\overline{DISTR}$

Serial Controller Interface

Part Number	Features
82C52	• UART/Bit rate generator in a single 28-pin package • Operates from DC to 1 Mbaud with an asynchronous 16X clock • 72 programmable bit rates • Low power operation: — 1 mA/MHz operating current, typical • 40-pin version available (HD-6406)

Pinout

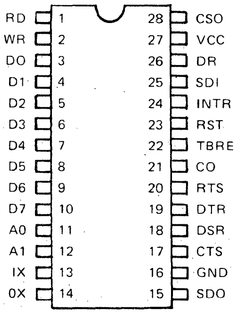
RD 1
WR 2
DO 3
D1 4
D2 5
D3 6
D4 7
D5 8
D6 9
D7 10
A0 11
A1 12
IX 13
OX 14
28 CSO
27 VCC
26 DR
25 SDI
24 INTR
23 RST
22 TBRE
21 CO
20 RTS
19 DTR
18 DSR
17 CTS
16 GND
15 SDO

Programmable Interval Timer

Part Number	Features
82C54	• Compatible with NMOS 8254 • Enhanced version of NMOS 8253 • Three independent 16-bit counters • Six programmable counter modes • Completely TTL compatible • 8 MHz count frequency • Low power operation: — 10 mA @ 8 MHz count frequency — 10 μA standby current

Pinout

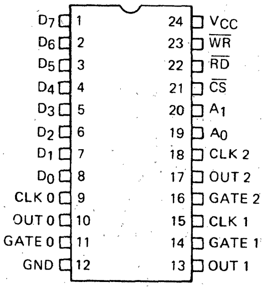
D_7 1
D_6 2
D_5 3
D_4 4
D_3 5
D_2 6
D_1 7
D_0 8
CLK 0 9
OUT 0 10
GATE 0 11
GND 12
24 V_{CC}
23 $\overline{WR}$
22 $\overline{RD}$
21 $\overline{CS}$
20 A_1
19 A_0
18 CLK 2
17 OUT 2
16 GATE 2
15 CLK 1
14 GATE 1
13 OUT 1

FOR COMPLETE DATA SHEET, Call 800-443-0100, Ext. 518

CMOS PERIPHERAL CIRCUITS

Programmable Peripheral Interface		Pinout
Part Number	Features	
82C55A	• Full compatibility with industry standard NMOS 8255A • 24 programmable I/0 pins • Handshake mode supported • Bit set/reset capability • Bus-hold circuits on all ports eliminate need for pull up/pull down resistors • ICC standby: 10 μA, maximum	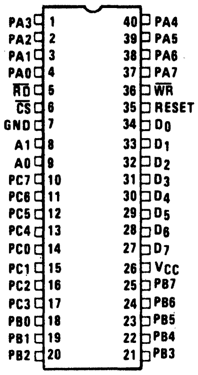

PA3 1
PA2 2
PA1 3
PA0 4
RD 5
CS 6
GND 7
A1 8
A0 9
PC7 10
PC6 11
PC5 12
PC4 13
PC0 14
PC1 15
PC2 16
PC3 17
PB0 18
PB1 19
PB2 20
40 PA4
39 PA5
38 PA6
37 PA7
36 WR
35 RESET
34 D0
33 D1
32 D2
31 D3
30 D4
29 D5
28 D6
27 D7
26 VCC
25 PB7
24 PB6
23 PB5
22 PB4
21 PB3

Priority Interrupt Controller		Pinout
Part Number	Features	
82C59A	• Compatible with NMOS 8259A • Eight maskable interrupt inputs • Cascade circuits allow up to 64 interrupt inputs with no additional circuitry • Supports both 8080/85 and 80C86/88 formats • Standby current: 10 μA, maximum	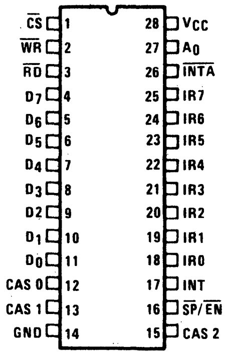

CS 1
WR 2
RD 3
D7 4
D6 5
D5 6
D4 7
D3 8
D2 9
D1 10
D0 11
CAS 0 12
CAS 1 13
GND 14
28 VCC
27 A0
26 INTA
25 IR7
24 IR6
23 IR5
22 IR4
21 IR3
20 IR2
19 IR1
18 IR0
17 INT
16 SP/EN
15 CAS 2

CMOS BUS SUPPORT CIRCUITS

Octal Latching Bus Driver

Part Number	Features
82C82	• Bipolar 8282 function compatible • Propagation delay guaranteed: 35 ns maximum —Full temperature range —10% power supply tolerances —Load capacitance: 300 pf • Gated inputs reduce operating power • ICCSB: 10 μA maximum

Pinout

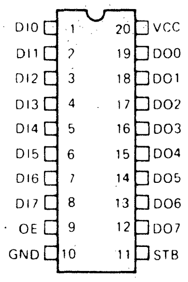
DI0 1 · 20 VCC
DI1 2 · 19 DO0
DI2 3 · 18 DO1
DI3 4 · 17 DO2
DI4 5 · 16 DO3
DI5 6 · 15 DO4
DI6 7 · 14 DO5
DI7 8 · 13 DO6
OE 9 · 12 DO7
GND 10 · 11 STB

Octal Latching Inverting Bus Driver

Part Number	Features
82C83H	• Bipolar 8283 function compatible • Full eight-bit latching buffer with inverted data output • Guaranteed propagation delay @ $C_L = 300$ pf • Gated inputs reduce operating power • ICCSB: 10 μA maximum • High output sink current −20 mA

Pinout

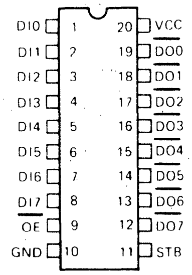
DI0 1 · 20 VCC
DI1 2 · 19 $\overline{DO0}$
DI2 3 · 18 $\overline{DO1}$
DI3 4 · 17 $\overline{DO2}$
DI4 5 · 16 $\overline{DO3}$
DI5 6 · 15 $\overline{DO4}$
DI6 7 · 14 $\overline{DO5}$
DI7 8 · 13 $\overline{DO6}$
$\overline{OE}$ 9 · 12 DO7
GND 10 · 11 STB

Octal Transceiver

Part Number	Features
82C86H	• Bipolar 8286 function compatible • Eight-bit bidirectional bus transceiver • Guaranteed propagation delay @ $C_L = 300$ pf • Gated inputs reduce power dissipation • ICCSB: 10 μA maximum • High output sink current −20 mA

Pinout

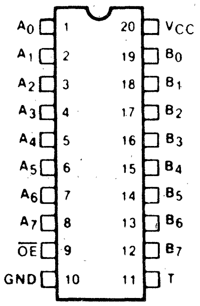
A_0 1 · 20 V_{CC}
A_1 2 · 19 B_0
A_2 3 · 18 B_1
A_3 4 · 17 B_2
A_4 5 · 16 B_3
A_5 6 · 15 B_4
A_6 7 · 14 B_5
A_7 8 · 13 B_6
$\overline{OE}$ 9 · 12 B_7
GND 10 · 11 T

Octal Inverting Transceiver

Part Number	Features
82C87H	• Bipolar 8287 function compatible • Eight-bit bidirectional bus transceiver with inverting data outputs • Guaranteed propagation delay @ $C_L = 300$ pf • Gated inputs reduce operating power dissipation • ICCSB: 10 μA maximum • High output sink current −20 mA

Pinout

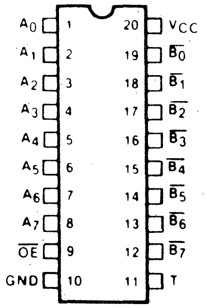
A_0 1 · 20 V_{CC}
A_1 2 · 19 $\overline{B_0}$
A_2 3 · 18 $\overline{B_1}$
A_3 4 · 17 $\overline{B_2}$
A_4 5 · 16 $\overline{B_3}$
A_5 6 · 15 $\overline{B_4}$
A_6 7 · 14 $\overline{B_5}$
A_7 8 · 13 $\overline{B_6}$
$\overline{OE}$ 9 · 12 $\overline{B_7}$
GND 10 · 11 T

FOR COMPLETE DATA SHEET, Call 800-443-0100, Ext. 518

HARRIS

CMOS BUS SUPPORT CIRCUITS

Clock Generator/Driver		Pinout
Part Number	**Features**	
82C84A	• Compatible with bipolar 8284A • Output frequencies up to 8 MHz • Provides ready synchronization • Parallel resonant crystal • ICC operating: 40 mA @ 8MHz system frequency	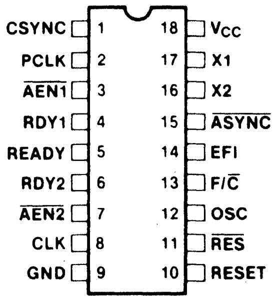

CSYNC 1
PCLK 2
AEN1 3
RDY1 4
READY 5
RDY2 6
AEN2 7
CLK 8
GND 9
18 VCC
17 X1
16 X2
15 ASYNC
14 EFI
13 F/C
12 OSC
11 RES
10 RESET

Static Clock Controller/Generator		Pinout
Part Number	**Features**	
82C85	• Provides complete static clock control for 80C86 and 80C88 systems • Supports stop-clock, stop-oscillator and low-frequency operation • 80C86/88 status line interface allows software control • DC to 8 MHz system clock • Low CMOS power dissipation • *See front page data sheet on page ____*	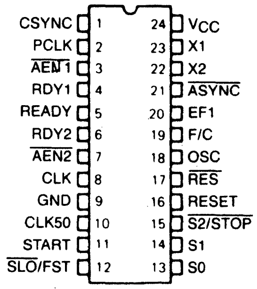

CSYNC 1
PCLK 2
AEN1 3
RDY1 4
READY 5
RDY2 6
AEN2 7
CLK 8
GND 9
CLK50 10
START 11
SLO/FST 12
24 VCC
23 X1
22 X2
21 ASYNC
20 EF1
19 F/C
18 OSC
17 RES
16 RESET
15 S2/STOP
14 S1
13 S0

Bus Controller		Pinout
Part Number	**Features**	
82C88	• Pin compatible with bipolar 8288 • Generates system control signals for maximum mode 80C86/88, 8086/88 • Full TTL compatibility • Bipolar drive capability • Low power operation: — ICC standby: 10 μA maximum — ICC operating: 1 mA/MHz maximum	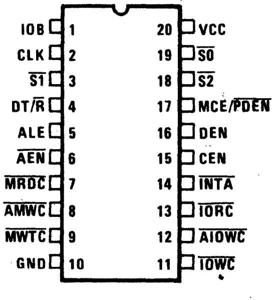

IOB 1
CLK 2
S1 3
DT/R 4
ALE 5
AEN 6
MRDC 7
AMWC 8
MWTC 9
GND 10
20 VCC
19 S0
18 S2
17 MCE/PDEN
16 DEN
15 CEN
14 INTA
13 IORC
12 AIOWC
11 IOWC

Bus Arbiter		Pinout
Part Number	**Features**	
82C89	• Pin compatible with bipolar 8289 • Provides bus control arbitration in multi-master processor systems • Low power operation — 1 mA/MHz	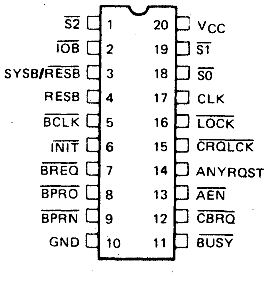

S2 1
IOB 2
SYSB/RESB 3
RESB 4
BCLK 5
INIT 6
BREQ 7
BPRO 8
BPRN 9
GND 10
20 VCC
19 S1
18 S0
17 CLK
16 LOCK
15 CRQLCK
14 ANYRQST
13 AEN
12 CBRQ
11 BUSY

CMOS DATA COMMUNICATION

Bit Rate Generator (BRG)

Part Number	Features	Pinout
HD-4702	- Programmable bit rate selection - 13 commonly used bit rates - Uses standard 2.4576 MHz crystal - 5 mW typical power dissipation	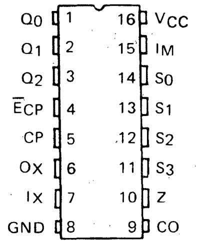

Q0 1
Q1 2
Q2 3
$\overline{\text{E}}$CP 4
CP 5
OX 6
IX 7
GND 8
16 VCC
15 IM
14 S0
13 S1
12 S2
11 S3
10 Z
9 CO

Universal Asynchronous Receiver/Transmitter (UART)

Part Number	Features	Pinout
HD-6402R HD-6402B	- Operates from DC to 1 Mbaud - Programmable word length, stop bits and parity - Industry standard pinout - Single +5 V power supply	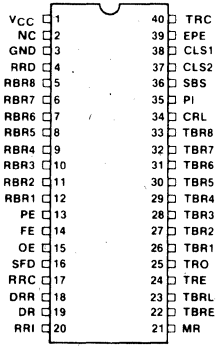

VCC 1
NC 2
GND 3
RRD 4
RBR8 5
RBR7 6
RBR6 7
RBR5 8
RBR4 9
RBR3 10
RBR2 11
RBR1 12
PE 13
FE 14
OE 15
SFD 16
RRC 17
DRR 18
DR 19
RRI 20
40 TRC
39 EPE
38 CLS1
37 CLS2
36 SBS
35 PI
34 CRL
33 TBR8
32 TBR7
31 TBR6
30 TBR5
29 TBR4
28 TBR3
27 TBR2
26 TBR1
25 TRO
24 TRE
23 TBRL
22 TBRE
21 MR

Programmable Asynchronous Communications Interface

Part Number	Features	Pinout
HD-6406	- UART/Bit rate generator in a single 40-pin package - Data rates from DC to 1 Mbaud with an asynchronous 16X clock - 72 programmable bit rates - Complete modem interface signals - DMA handshaking operation - Low power operation: — 1 mA/MHz, typical - 28-pin version available (82C52)	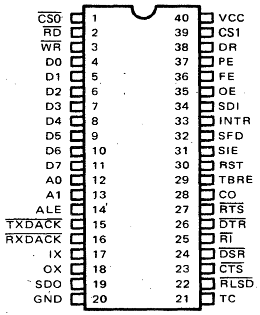

$\overline{\text{CS0}}$ 1
$\overline{\text{RD}}$ 2
$\overline{\text{WR}}$ 3
D0 4
D1 5
D2 6
D3 7
D4 8
D5 9
D6 10
D7 11
A0 12
A1 13
ALE 14
$\overline{\text{TXDACK}}$ 15
$\overline{\text{RXDACK}}$ 16
IX 17
OX 18
SDO 19
GND 20
40 VCC
39 CS1
38 DR
37 PE
36 FE
35 OE
34 SDI
33 INTR
32 SFD
31 SIE
30 RST
29 TBRE
28 CO
27 $\overline{\text{RTS}}$
26 $\overline{\text{DTR}}$
25 $\overline{\text{RI}}$
24 $\overline{\text{DSR}}$
23 $\overline{\text{CTS}}$
22 $\overline{\text{RLSD}}$
21 TC

Asynchronous Serial Manchester Adapter (ASMA)

Part Number	Features	Pinout
HD-6408	- 1 Mb/s data rate - Sync identification and lock-in - Clock recovery - Manchester II encode and decode	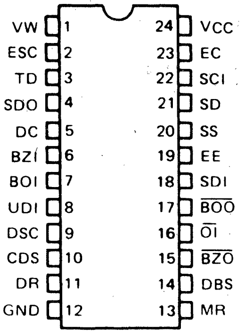

VW 1
ESC 2
TD 3
SDO 4
DC 5
BZI 6
BOI 7
UDI 8
DSC 9
CDS 10
DR 11
GND 12
24 VCC
23 EC
22 SCI
21 SD
20 SS
19 EE
18 SDI
17 $\overline{\text{BOO}}$
16 $\overline{\text{OI}}$
15 $\overline{\text{BZO}}$
14 DBS
13 MR

HARRIS

CMOS DATA COMMUNICATION

Manchester Encoder/Decoder (MED)		Pinout
Part Number	Features	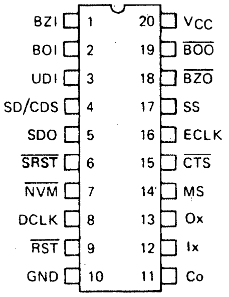
HD-6409	• 1 Mb/s data rate • Digital PLL clock recovery • On chip oscilliator • Manchester II encode and decode • Military temperature range available	

BZI 1
BOI 2
UDI 3
SD/CDS 4
SDO 5
SRST 6
NVM 7
DCLK 8
RST 9
GND 10
20 VCC
19 BOO
18 BZO
17 SS
16 ECLK
15 CTS
14 MS
13 Ox
12 Ix
11 Co

Manchester Encoder/Decoder (MED)		Pinout
Part Number	Features	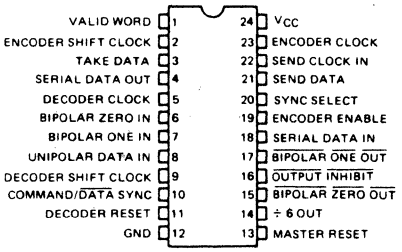
HD-15530	• Support of MIL-STD-1553 • 1.25 Mb/s data rate • Sync identification and lock-in • Clock recovery • Manchester II encode, decode • Separate encode and decode • Low operating power: 50 mW @ 5 Volts • Full military temperature range	

VALID WORD 1
ENCODER SHIFT CLOCK 2
TAKE DATA 3
SERIAL DATA OUT 4
DECODER CLOCK 5
BIPOLAR ZERO IN 6
BIPOLAR ONE IN 7
UNIPOLAR DATA IN 8
DECODER SHIFT CLOCK 9
COMMAND/DATA SYNC 10
DECODER RESET 11
GND 12
24 VCC
23 ENCODER CLOCK
22 SEND CLOCK IN
21 SEND DATA
20 SYNC SELECT
19 ENCODER ENABLE
18 SERIAL DATA IN
17 BIPOLAR ONE OUT
16 OUTPUT INHIBIT
15 BIPOLAR ZERO OUT
14 ÷ 6 OUT
13 MASTER RESET

Manchester Encoder/Decoder (MED)		Pinout
Part Number	Features	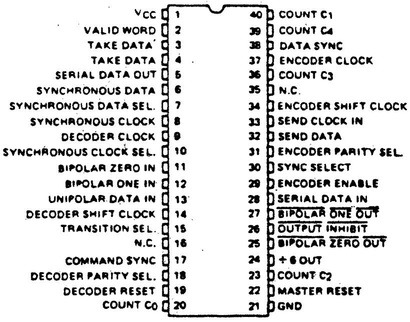
HD-15531	• Support of MIL-STD-1553 • 1.25 Mb/s data rate • 2.5 Mb/s option (HD-15531B) • Sync identification and lock-in • Clock recovery • Variable frame length to 32 bits • Manchester II encode, decode • Separate encode and decode • Low operating power: 50 mW @ 5 Volts • Full military temperature range	

VCC 1
VALID WORD 2
TAKE DATA 3
TAKE DATA 4
SERIAL DATA OUT 5
SYNCHRONOUS DATA 6
SYNCHRONOUS DATA SEL. 7
SYNCHRONOUS CLOCK 8
DECODER CLOCK 9
SYNCHRONOUS CLOCK SEL. 10
BIPOLAR ZERO IN 11
BIPOLAR ONE IN 12
UNIPOLAR DATA IN 13
DECODER SHIFT CLOCK 14
TRANSITION SEL. 15
N.C. 16
COMMAND SYNC 17
DECODER PARITY SEL. 18
DECODER RESET 19
COUNT C0 20
40 COUNT C1
39 COUNT C4
38 DATA SYNC
37 ENCODER CLOCK
36 COUNT C3
35 N.C.
34 ENCODER SHIFT CLOCK
33 SEND CLOCK IN
32 SEND DATA
31 ENCODER PARITY SEL.
30 SYNC SELECT
29 ENCODER ENABLE
28 SERIAL DATA IN
27 BIPOLAR ONE OUT
26 OUTPUT INHIBIT
25 BIPOLAR ZERO OUT
24 ÷ 6 OUT
23 COUNT C2
22 MASTER RESET
21 GND

82C85

CMOS Static Clock Controller/Generator

Features

- Generates System Clocks for CMOS or NMOS Microprocessors and Peripherals
- Complete Control Over System Clock Operation for Very Low System Power
  - ▸ Stop-Oscillator
  - ▸ Low Frequency
  - ▸ Stop-Clock
  - ▸ Full Speed Operation
- DC to 25 MHz Operation (DC to 8 MHz System Clock)
- Generates Both 50% and 33% Duty Cycle Clocks (Synchronized)
- Uses a Parallel Mode Crystal Circuit or External Frequency Source
- TTL/CMOS Compatible Inputs/Outputs
- Very Low Power Consumption
- 24-Pin Slimline Dual-In-Line or 28-Pad Square LCC Package Options
- Single +5V Power Supply
- Commercial, Industrial and Military Temperature Ranges Available

Pinout

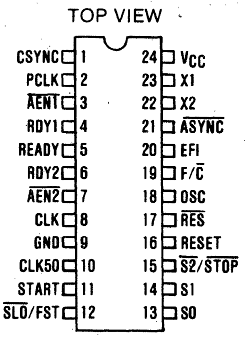
TOP VIEW
CSYNC 1
PCLK 2
$\overline{\text{AEN1}}$ 3
RDY1 4
READY 5
RDY2 6
$\overline{\text{AEN2}}$ 7
CLK 8
GND 9
CLK50 10
START 11
$\overline{\text{SLO}}$/FST 12
13 S0
14 S1
15 $\overline{\text{S2}}/\overline{\text{STOP}}$
16 RESET
17 $\overline{\text{RES}}$
18 OSC
19 F/$\overline{\text{C}}$
20 EFI
21 $\overline{\text{ASYNC}}$
22 X2
23 X1
24 V_{CC}

Description

The Harris 82C85 Static CMOS Clock Controller/Generator provides simple, complete control of static CMOS system operating modes and supports full speed, slow, stop-clock and stop-oscillator operation. While directly compatible with the Harris 80C86/80C88 16-bit Static CMOS Microprocessor Family, the 82C85 can also be used for general purpose system clock control.

For static system designs, separate signals are provided on the 82C85 for stop (S0, S1, $\overline{\text{S2}}/\overline{\text{STOP}}$) and start (START) control of the crystal oscillator and system clocks. A single control line ($\overline{\text{SLO}}$/FST) determines 82C85 fast (crystal/EFI frequency divided by 3) or slow (crystal/EFI frequency divided by 768) mode operation. Automatic maximum mode 80C86/88 software HALT instruction decode logic in the 82C85 enables software-based clock control. Restart logic insures valid clock start-up and complete synchronization of system clocks.

The 82C85 is manufactured using the Harris advanced Scaled SAJI IV CMOS process. In addition to clock control circuitry, the 82C85 also contains a crystal controlled oscillator (up to 25 MHz), clock generation logic, complete "Ready" synchronization and reset logic. This permits the designer to tailor the system power-performance product to provide optimum performance at required power levels.

Functional Diagram

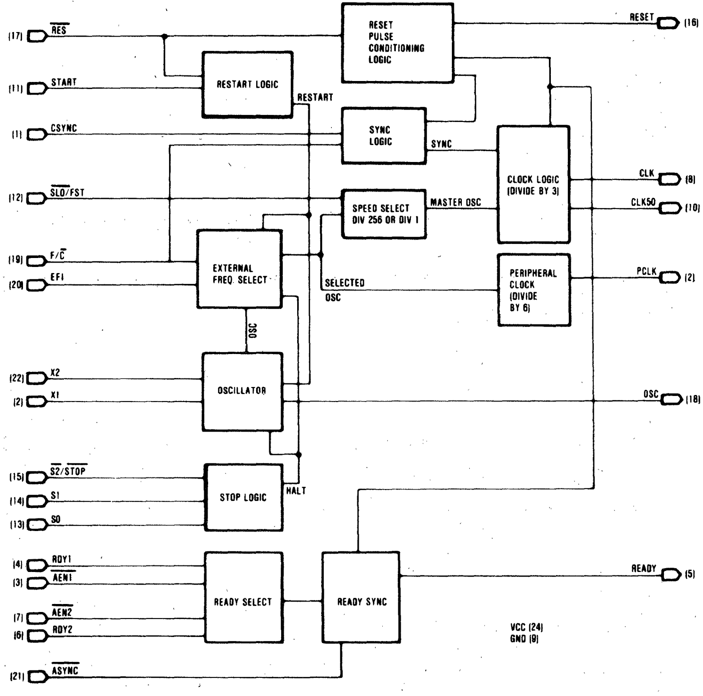
(17) $\overline{\text{RES}}$
(11) START
(1) CSYNC
(12) $\overline{\text{SLO}}$/FST
(19) F/$\overline{\text{C}}$
(20) EFI
(22) X2
(2) X1
(15) $\overline{\text{S2}}/\overline{\text{STOP}}$
(14) S1
(13) S0
(4) RDY1
(3) $\overline{\text{AEN1}}$
(7) $\overline{\text{AEN2}}$
(6) RDY2
(21) $\overline{\text{ASYNC}}$
RESET PULSE CONDITIONING LOGIC
RESTART LOGIC
RESTART
SYNC LOGIC
SYNC
SPEED SELECT DIV 256 OR DIV 1
MASTER OSC
EXTERNAL FREQ. SELECT
SELECTED OSC
OSC
OSCILLATOR
STOP LOGIC
HALT
READY SELECT
READY SYNC
CLOCK LOGIC (DIVIDE BY 3)
PERIPHERAL CLOCK (DIVIDE BY 6)
RESET (16)
CLK (8)
CLK50 (10)
PCLK (2)
OSC (18)
READY (5)
VCC (24)
GND (9)

Copyright © Harris Corporation 1985

CAUTION: Electronic devices are sensitive to electrostatic discharge. Proper I.C. handling procedures should be followed.

82C37A

CMOS High Performance Programmable DMA Controller

Features

- **Compatible with the NMOS 8237A**
- **Four Independent Maskable Channels with Autoinitialization Capability**
- **Expandable to any Number of Channels**
- **Memory-to-memory Transfers**
- **Static CMOS Design Permits Low Power Operation**
  - **ICCOP = 2 mA/MHz Maximum**
  - **ICCSB = 10 μA Maximum**
- **Fully TTL/CMOS Compatible**
- **High Speed Data Transfers up to 4 MBytes/sec with 8 MHz Clock**
- **Upgraded Capabilities Allow Software Read of Internal Registers**

Description

The 82C37A is an enhanced version of the industry standard 8237A (DMA) Direct Memory Access) controller, fabricated using Harris' advanced SAJI (self aligned junction isolated) CMOS process. Pin compatible with NMOS designs, the 82C37A offers increased functionality, improved performance, and dramatically reduced power consumption. The fully static design permits gated clock operation for even further reduction of power.

The 82C37A controller can improve system performance by allowing external devices to transfer data directly to or from system memory. Memory-to-memory transfer capability is also provided, along with a memory block initialization feature. DMA requests may be generated by either hardware or software, and each channel is independently programmable with a variety of features for flexible operation.

The 82C37A is designed to be used with an external address latch, such as the 82C82 CMOS to demultiplex the most significant 8 bits. The 82C37A can be used with industry standard microprocessors such as 80C86, 80C88, 8088, 8085, 8086, Z80, NSC800, 80186 and others.

Multimode programmability allows the user to select from three basic types of DMA services, and reconfiguration under program control is possible even with the clock to the controller stopped. Each channel has a full 64K address and word count range, and may be programmed to autoinitialize these registers following DMA termination (end of process).

Pin Configuration

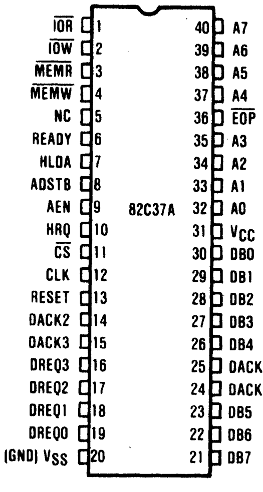
$\overline{IOR}$ 1
$\overline{IOW}$ 2
$\overline{MEMR}$ 3
$\overline{MEMW}$ 4
NC 5
READY 6
HLDA 7
ADSTB 8
AEN 9
HRQ 10
$\overline{CS}$ 11
CLK 12
RESET 13
DACK2 14
DACK3 15
DREQ3 16
DREQ2 17
DREQ1 18
DREQ0 19
(GND) V_{SS} 20
82C37A
40 A7
39 A6
38 A5
37 A4
36 $\overline{EOP}$
35 A3
34 A2
33 A1
32 A0
31 V_{CC}
30 DB0
29 DB1
28 DB2
27 DB3
26 DB4
25 DACK0
24 DACK1
23 DB5
22 DB6
21 DB7

Block Diagram

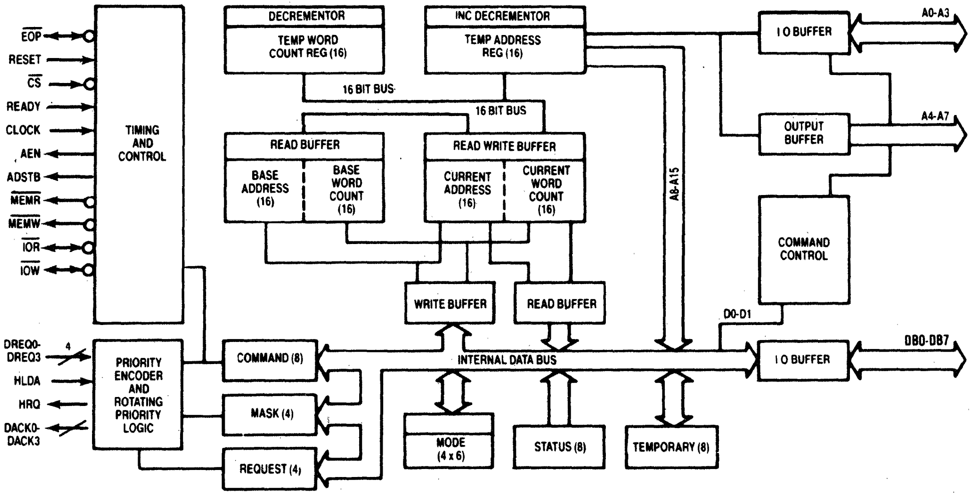
$\overline{EOP}$
RESET
$\overline{CS}$
READY
CLOCK
AEN
ADSTB
$\overline{MEMR}$
$\overline{MEMW}$
$\overline{IOR}$
$\overline{IOW}$
TIMING AND CONTROL
DECREMENTOR
TEMP WORD COUNT REG (16)
INC DECREMENTOR
TEMP ADDRESS REG (16)
16 BIT BUS
16 BIT BUS
READ BUFFER
BASE ADDRESS (16)
BASE WORD COUNT (16)
READ WRITE BUFFER
CURRENT ADDRESS (16)
CURRENT WORD COUNT (16)
WRITE BUFFER
READ BUFFER
A8-A15
I O BUFFER
A0-A3
OUTPUT BUFFER
A4-A7
COMMAND CONTROL
D0-D1
I O BUFFER
DB0-DB7
INTERNAL DATA BUS
DREQ0-DREQ3
4
HLDA
HRQ
DACK0-DACK3
4
PRIORITY ENCODER AND ROTATING PRIORITY LOGIC
COMMAND (8)
MASK (4)
REQUEST (4)
MODE (4 x 6)
STATUS (8)
TEMPORARY (8)

Copyright © Harris Corporation 1985

82C50A

CMOS Asynchronous Communications Element

Features

- **Single Chip UART/BRG**
- **DC to 10 MHz Operation, (DC to 625K Baud)**
- **Crystal or External Clock Input**
- **On Chip Baud Rate Generator 1 to 65535 Divisor Generates 16X Clock**
- **Prioritized Interrupt Mode**
- **Fully TTL/CMOS Compatible**
- **Microprocessor Bus Oriented Interface**
- **80C86/80C88 Compatible**
- **Scaled SAJI IV CMOS Process**
- **Low Power - 1 mA/MHz Typical**
- **Modem Interface**
- **Line Break Generation and Detection**
- **Loopback and Echo Modes**
- **Doubled Buffered Transmitter and Receiver**
- **Single 5V Supply**

Pinout

TOP VIEW

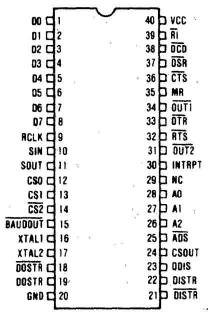
D0 1
D1 2
D2 3
D3 4
D4 5
D5 6
D6 7
D7 8
RCLK 9
SIN 10
SOUT 11
CS0 12
CS1 13
CS2 14
BAUDOUT 15
XTAL1 16
XTAL2 17
DOSTR 18
DOSTR 19
GND 20
40 VCC
39 RI
38 DCD
37 DSR
36 CTS
35 MR
34 OUT1
33 DTR
32 RTS
31 OUT2
30 INTRPT
29 NC
28 A0
27 A1
26 A2
25 ADS
24 CSOUT
23 DDIS
22 DISTR
21 DISTR

Description

The 82C50A Asynchronous Communication Element (ACE) is a high performance programmable Universal Asynchronous Receiver/Transmitter (UART) and Baud Rate Generator (BRG) on a single chip. Using Harris Semiconductor's advanced Scaled SAJI IV CMOS Process, the ACE will support data rates from DC to 625K baud (0-10 MHz clock).

The ACE's receiver circuitry converts start, data, stop, and parity bits into a parallel data word. The transmitter circuitry converts a parallel data word into serial form and appends the start, parity, and stop bits. The word length is programmable to 5, 6, 7, or 8 data bits. Stop bit selection provides a choice of 1, 1.5, or 2 stop bits.

The Baud Rate Generator divides the clock by a divisor programmable from 1 to 2^{16}-1 to provide standard RS-232C baud rates when using any one of three industry standard baud rate crystals (1.8432 MHz, 2.4576 MHz, or 3.072 MHz). A programmable buffered clock output ($\overline{\text{BAUDOUT}}$) provides either a buffered oscillator or 16X (16 times the data rate) baud rate clock for general purpose system use.

To meet the system requirements of a CPU interfacing to an asynchronous channel, the modem control signals $\overline{\text{RTS}}$, $\overline{\text{CTS}}$, $\overline{\text{DSR}}$, $\overline{\text{DTR}}$, $\overline{\text{RI}}$, $\overline{\text{DCD}}$ are provided. Two general purpose outputs, $\overline{\text{OUT1}}$ and $\overline{\text{OUT2}}$, are available for system use. Inputs and outputs have been designed with full TTL/CMOS compatability in order to facilitate mixed TTL/NMOS/CMOS system design.

The 82C50A has ten accessible registers that are used to control 82C50A operations, determine status, and to transmit and receive data.

Functional Diagram

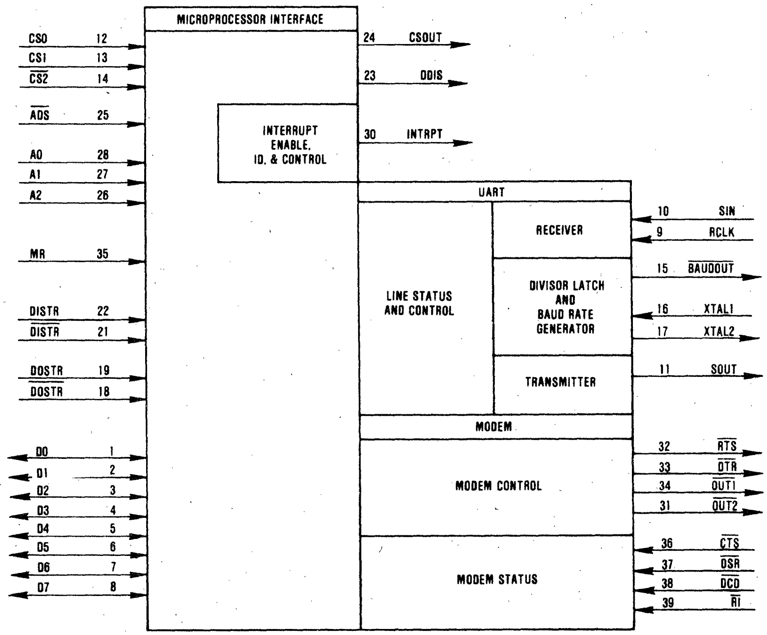
MICROPROCESSOR INTERFACE
CS0 12
CS1 13
CS2 14
ADS 25
A0 28
A1 27
A2 26
MR 35
DISTR 22
DISTR 21
DOSTR 19
DOSTR 18
D0 1
D1 2
D2 3
D3 4
D4 5
D5 6
D6 7
D7 8
24 CSOUT
23 DDIS
INTERRUPT ENABLE, ID, & CONTROL
30 INTRPT
UART
LINE STATUS AND CONTROL
RECEIVER
DIVISOR LATCH AND BAUD RATE GENERATOR
TRANSMITTER
10 SIN
9 RCLK
15 BAUDOUT
16 XTAL1
17 XTAL2
11 SOUT
MODEM
MODEM CONTROL
MODEM STATUS
32 RTS
33 DTR
34 OUT1
31 OUT2
36 CTS
37 DSR
38 DCD
39 RI

CAUTION: Electronic devices are sensitive to electrostatic discharge. Proper I.C. handling procedures should be followed.

Copyright © Harris Corporation 1985

HARRIS

82C52

CMOS Serial Controller Interface

Features

- SINGLE CHIP UART/BRG
- DC TO 16MHz OPERATION
- CRYSTAL OR EXTERNAL CLOCK INPUT
- ON CHIP BAUD RATE GENERATOR
  . . . 72 SELECTABLE BAUD RATES
- INTERRUPT MODE WITH MASK CAPABILITY
- MICROPROCESSOR BUS ORIENTED INTERFACE
- 80C86 COMPATIBLE
- SCALED SAJI IV CMOS PROCESS
- SINGLE 5V POWER SUPPLY
- LOW POWER – 1mA/MHz TYPICAL
- MODEM INTERFACE
- LINE BREAK GENERATION AND DETECTION
- LOOPBACK AND ECHO MODES

Description

The 82C52 is a high performance programmable Universal Asynchronous Receiver/Transmitter (UART) and Baud Rate Generator (BRG) on a single chip. Utilizing the Harris advanced Scaled SAJI IV CMOS process, the 82C52 will support data rates from D.C. to 1M baud asynchronously with a 16X clock (0-16 MHz clock frequency).

The on-chip Baud Rate Generator can be programmed for any one of 72 different baud rates using a single industry standard crystal or external frequency source. A unique pre-scale divide circuit has been designed to provide standard RS-232-C baud rates when using any one of three industry standard baud rate crystals (1.8432 MHz, 2.4576 MHz, or 3.072 MHz).

A programmable buffered clock output (CO) is available and can be programmed to provide either a buffered oscillator or 16X baud rate clock for general purpose system usage.

Inputs and outputs have been designed with full TTL/CMOS compatibility in order to facilitate mixed TTL/NMOS/CMOS system design.

Pinout

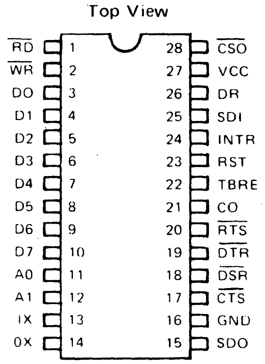
Top View
$\overline{RD}$ 1
$\overline{WR}$ 2
D0 3
D1 4
D2 5
D3 6
D4 7
D5 8
D6 9
D7 10
A0 11
A1 12
IX 13
OX 14
28 $\overline{CSO}$
27 VCC
26 DR
25 SDI
24 INTR
23 RST
22 TBRE
21 CO
20 $\overline{RTS}$
19 $\overline{DTR}$
18 $\overline{DSR}$
17 $\overline{CTS}$
16 GND
15 SDO

Block Diagram

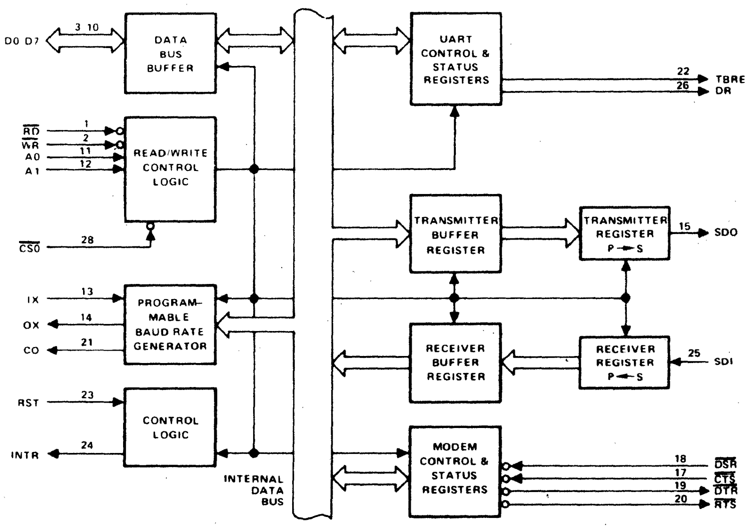
D0 D7
3 10
DATA BUS BUFFER
$\overline{RD}$ 1
$\overline{WR}$ 2
A0 11
A1 12
READ/WRITE CONTROL LOGIC
$\overline{CSO}$ 28
IX 13
OX 14
CO 21
PROGRAM-MABLE BAUD RATE GENERATOR
RST 23
INTR 24
CONTROL LOGIC
INTERNAL DATA BUS
UART CONTROL & STATUS REGISTERS
22 TBRE
26 DR
TRANSMITTER BUFFER REGISTER
TRANSMITTER REGISTER P→S
15 SDO
RECEIVER BUFFER REGISTER
RECEIVER REGISTER P←S
25 SDI
MODEM CONTROL & STATUS REGISTERS
18 $\overline{DSR}$
17 $\overline{CTS}$
19 $\overline{DTR}$
20 $\overline{RTS}$

VCC - PIN 27
GND - PIN 16

CAUTION: These devices are sensitive to electrostatic discharge. Users should follow standard IC Handling Procedures.

Copyright © Harris Corporation 1985

HARRIS

HD-6406
CMOS Programmable Asynchronous Communication Interface

Features

- SINGLE CHIP UART/BRG
- DC TO 16MHz OPERATION
- CRYSTAL OR EXTERNAL CLOCK INPUT
- ON CHIP BAUD RATE GENERATOR
  . . .72 SELECTABLE BAUD RATES
- DMA OR VECTORED INTERRUPT MODE
- MASKABLE INTERRUPTS
- MICROPROCESSOR BUS ORIENTED INTERFACE
- SCALED SAJI IV CMOS PROCESS
- SINGLE 5V POWER SUPPLY
- LOW POWER – 1mA/MHz TYPICAL
- COMPLETE MODEM INTERFACE
- LINE BREAK GENERATION AND DETECTION
- LOOPBACK AND ECHO MODES

Pinout

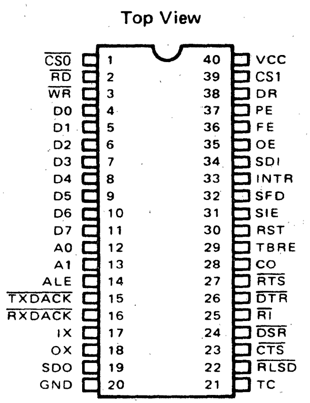
Top View
$\overline{CS0}$ 1
$\overline{RD}$ 2
$\overline{WR}$ 3
D0 4
D1 5
D2 6
D3 7
D4 8
D5 9
D6 10
D7 11
A0 12
A1 13
ALE 14
$\overline{TXDACK}$ 15
$\overline{RXDACK}$ 16
IX 17
OX 18
SDO 19
GND 20
40 VCC
39 CS1
38 DR
37 PE
36 FE
35 OE
34 SDI
33 INTR
32 SFD
31 SIE
30 RST
29 TBRE
28 CO
27 $\overline{RTS}$
26 $\overline{DTR}$
25 $\overline{RI}$
24 $\overline{DSR}$
23 $\overline{CTS}$
22 $\overline{RLSD}$
21 TC

Description

The HD-6406 (PACI) is a high performance programmable Universal Asynchronous Receiver/Transmitter (UART) and Baud Rate Generator (BRG) on a single chip. Utilizing Harris Semiconductor's advanced Scaled SAJI IV CMOS process, the PACI will support data rates from DC to 1Mbaud (0-16MHz clock). In addition to all standard UART functions, the PACI includes a complete Data Communications Equipment (DCE) interface.

Provision is made for DMA control of the PACI so that operation at the higher data rates is not hindered by slow microprocessor response times. An ALE control input permits direct interfacing to multiplexed data/address buses common to many microprocessors.

The interrupt structure of the PACI is user-programmable and can be configured to provide a single interrupt for any status change. A subsequent read of an internal status register will identify the source of the interrupt. If desired, the PACI can also provide separate hardware interrupt outputs for the receiver, transmitter and modem status changes. Separate error condition outputs can be used to pinpoint the exact cause of any detected error condition.

Block Diagram

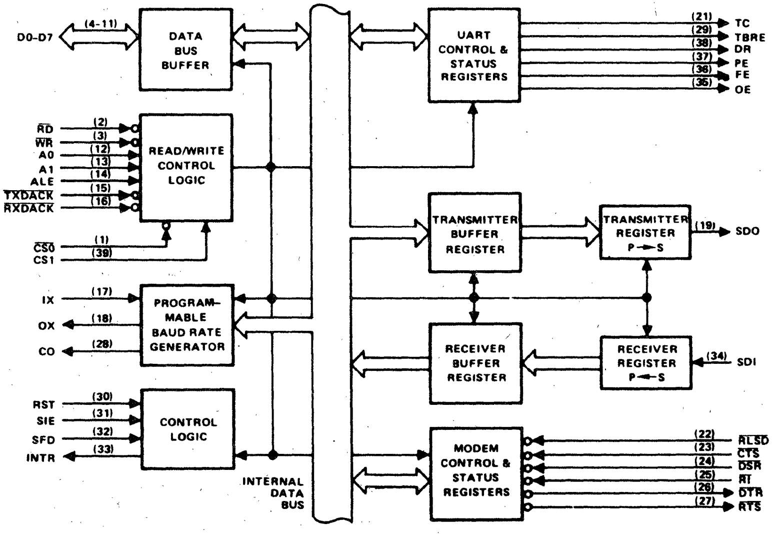
D0-D7
(4-11)
DATA BUS BUFFER
UART CONTROL & STATUS REGISTERS
(21) TC
(29) TBRE
(38) DR
(37) PE
(36) FE
(35) OE
$\overline{RD}$ (2)
$\overline{WR}$ (3)
A0 (12)
A1 (13)
ALE (14)
$\overline{TXDACK}$ (15)
$\overline{RXDACK}$ (16)
READ/WRITE CONTROL LOGIC
$\overline{CS0}$ (1)
CS1 (39)
TRANSMITTER BUFFER REGISTER
TRANSMITTER REGISTER P→S
(19) SDO
IX (17)
OX (18)
CO (28)
PROGRAMMABLE BAUD RATE GENERATOR
RECEIVER BUFFER REGISTER
RECEIVER REGISTER P←S
(34) SDI
RST (30)
SIE (31)
SFD (32)
INTR (33)
CONTROL LOGIC
INTERNAL DATA BUS
MODEM CONTROL & STATUS REGISTERS
(22) $\overline{RLSD}$
(23) $\overline{CTS}$
(24) $\overline{DSR}$
(25) $\overline{RI}$
(26) $\overline{DTR}$
(27) $\overline{RTS}$

CAUTION: These devices are sensitive to electrostatic discharge. Users should follow standard IC Handling Procedures.

Copyright © Harris Corporation 1983

HARRIS

MILITARY JAN/DESC DIGITAL PRODUCTS

In addition to our standard military temperature range products, Harris Semiconductor has been certified for processing JAN products since 1974. Contact your local Harris sales representative or sales office for the latest status on Harris military products.

DESC Approved Products

Harris Part Number	Description	DESC Drawing Number
CMOS Microprocessors and Peripherals		
MD80C86/B	CMOS 16-bit Microprocessor	8405201QB
MR80C86/B	CMOS 16-bit Microprocessor	84052012C
MD82C52/B	CMOS Serial Controller Interface	8501501YB
MR82C52/B	CMOS Serial Controller Interface	85015013C
MD82C54/B	CMOS Programmable Interval Timer	8406501JB
MR82C54/B	CMOS Programmable Interval Timer	84065013C
MD82C55A-5/B	CMOS Programmable Peripheral Interface	8406601QB
MR82C55A-5/B	CMOS Programmable Peripheral Interface	8406601YC
MD82C59A-5/B	CMOS Priority Interrupt Controller	8501601YB
MR82C59A-5/B	CMOS Priority Interrupt Controller	85016013C
MD82C59A/B	CMOS Priority Interrupt Controller	8501602YB
MR82C59A/B	CMOS Priority Interrupt Controller	85016023C
MD82C82/B	CMOS Octal Latch (non-inverting)	8406701RB
MR82C82/B	CMOS Octal Latch (non-inverting)	84067012C
MD82C84A/B	CMOS Clock Generator/Driver	8406801VB
MR82C84A/B	CMOS Clock Generator/Driver	84068012C
MD82C88/B	CMOS Bus Controller	8406901RB
MR82C88/B	CMOS Bus Controller	84069012C
MD82C89/B	CMOS Bus Arbiter	8552801RB
MR82C89/B	CMOS Bus Arbiter	85528012C
HD1-15530-8	Manchester Encoder-Decoder (MIL-STD-1553 format)	7802901JB
HD4-15530-8	Manchester Encoder-Decoder (MIL-STD-1553 format)	78029013C
CMOS Static RAMs		
HM1-6504S-8	4096x1 CMOS Synchronous Static RAM	8102401VB
HM4-6504S-8	4096x1 CMOS Synchronous Static RAM	8102401XC
HM1-6514S-8	1024x4 CMOS Synchronous Static RAM	8102402VB
HM4-6514S-8	1024x4 CMOS Synchronous Static RAM	8102402XC
HM1-6516-8	2048x8 CMOS Synchronous Static RAM	8403601JB
HM4-6516-8	2048x8 CMOS Synchronous Static RAM	8403601XC
HM1-65162-8	2048x8 CMOS Asynchronous Static RAM	8403602JB
HM4-65162-8	2048x8 CMOS Asynchronous Static RAM	8403602XC
HM1-65262-8	16384x1 CMOS Asynchronous Static RAM	8413201RB
HM4-65262-8	16384x1 CMOS Asynchronous Static RAM	8413201YC

JAN Qualified Products

Harris Part Number	Description	JAN Part Number
CMOS Static RAM		
JAN 6504	4096x1 QPL1 CMOS RAM	M38510/24501BVB
JAN 6514	1024x4 QPL1 CMOS RAM	M38510/24502BVB

HD64180
High Integration 8-Bit CMOS CPU

PRELIMINARY

HITACHI

GENERAL DESCRIPTION

Based on a microcoded execution unit and advanced CMOS manufacturing technology, the Hitachi HD64180 is an 8-bit CPU, which provides high performance, reduced system cost, and low power operation, while maintaining compatibility with the large base of industry-standard 8-bit software.

■ FEATURES

- Central Processing Unit (CPU)
  - Upward compatible with existing Z80, 8085 and 8080 software
  - Fast (17-clock) 8-bit multiple with 16-bit result
- Memory Management Unit (MMU)
  - Supports 512k-bytes memory and 64k-bytes I/O address space
- 12-Level Vectored Interrupt Controller
  - Supports 8 internal and 4 external interrupt sources
- 2-channel Direct Memory Access Controller (DMAC)
  - Allows memory-to-memory, memory-to-I/O, and memory-to-memory-mapped-I/O transfers
- 2-channel Full Duplex Asynchronous Serial Communications Interface (ASCI)
  - Speeds from 150 baud to 38,400 baud
  - Programmable Baud Rate Generator and Modem Signal Controls
- 1-channel Clocked Serial I/O Port (CSI/O)
  - For high-speed interprocessor communication (up to 300k bps at 6 MHz)
- 2-channel 16 bit Programmable Reload Timer (PRT)
  - For timing and output waveform generation
- Dynamic RAM Refresh Circuit
  - Refreshes dynamic RAMs without the need for additional external support chips
- "Dual Bus" Interface
  - Compatible with 68xx and 80xx families
- Three Low Power Modes
  - SLEEP, IOSTOP, and SYSTEM STOP
- CMOS Process Technology
  - Fully TTL compatible

■ TYPE OF PRODUCTS

TYPE NO.	CLOCK FREQUENCY	PACKAGE
HD64B180ROP	6 MHz	DP-64S
HD64B180ROCP	6 MHz	CP-68

HD64180

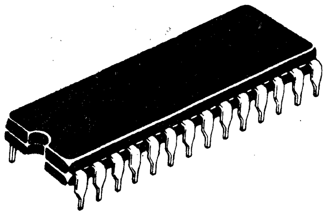

(DP-64S)

HD64180

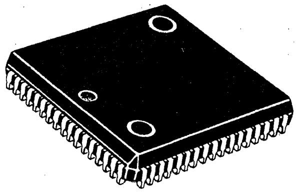

(CP-68)

■ PIN ARRANGEMENT

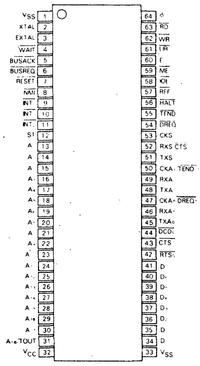
VSS 1
XTAL 2
EXTAL 3
WAIT 4
BUSACK 5
BUSREQ 6
RESET 7
NMI 8
INT 9
INT 10
INT 11
ST 12
A 13
A 14
A 15
A 16
A 17
A 18
A 19
A 20
A 21
A 22
A 23
A 24
A 25
A 26
A 27
A 28
A 29
A 30
A18/TOUT 31
VCC 32
64 φ
63 RD
62 WR
61 LIR
60 E
59 ME
58 IOE
57 REF
56 HALT
55 TEND
54 DREQ
53 CKS
52 RXS CTS
51 TXS
50 CKA TEND
49 RXA
48 TXA
47 CKA DREQ
46 RXA
45 TXA
44 DCD
43 CTS
42 RTS
41 D
40 D
39 D
38 D
37 D
36 D
35 D
34 D
33 VSS

(DP-64S)

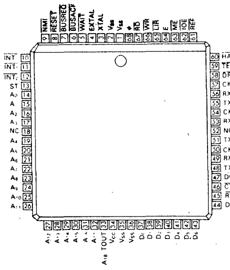
NMI 9
RESET 8
BUSREQ 7
BUSACK 6
WAIT 5
EXTAL 4
XTAL 3
Vss 2
Vss 1
φ 68
RD 67
WR 66
LIR 65
E 64
ME 63
IOE 62
REF 61
INT 10
INT 11
INT 12
ST 13
A0 14
A 15
A2 16
A3 17
NC 18
A4 19
A5 20
A6 21
A7 22
A8 23
A9 24
A10 25
A11 26
60 HALT
59 TEND
58 DREQ
57 CKS
56 RXS CTS
55 TXS
54 CKA TEND
53 RXA
52 NC
51 TXA
50 CKA0 DREQ0
49 RXA0
48 TXA0
47 DCD0
46 CTS0
45 RTS0
44 D
27 A12
28 A13
29 A14
30 A15
31 A
32 A
33 A18 TOUT
34 Vcc
35 Vss
36 Vss
37 D0
38 D
39 D2
40 D3
41 D4
42 D5
43 D6

(CP-68) Under development

HITACHI AMERICA, LTD. Semiconductor and IC Sales and Service Division
2210 O'Toole Avenue, San Jose, CA 95131 • (408) 942-1500
TELEX: 17-1581 TWX: 910-338-2103

HD63484-8 Advanced CRT Controller (ACRTC)

AUGUST 1985

HITACHI

■ GENERAL DESCRIPTION

The Advanced CRT Controller (ACRTC) integrates all CRT and graphic control functions on a single chip. It is implemented using Hitachi's 2-micron CMOS technology. The ACRTC's design is based on a bit-mapped technology, and it has significantly more control functions than the previous generation HD6845S (CRTC).

This microcomputer peripheral device, which is capable of controlling raster scan type CRTs, is designed for a wide range of applications. The ACRTC is designed to interface with both 8- and 16-bit buses and operates with microprocessors such as the Hitachi HD64180, the 68000, and the 8086. It has three on-chip processors which relieve the system CPU of many complex real-time tasks. This reduces CPU software overhead and enhances system throughput. Furthermore, the ACRTC has three modes: character only, graphic only, and multiplexed character/graphic. This permits it to be utilized in applications ranging from character-only display devices to large full-graphic systems.

■ FEATURES

- High speed graphic drawings
  - Drawing rate : Maximum 500 ns/pixel (Color drawing)
  - Drawn graphics : Dot, Line, Rectangle, Poly-line, Poly-gon, Circle, Ellipse, Paint, Copy, etc.
  - Drawn colors : 16-bit/word
    1-, 2-, 4-, 8-, 16-bit/pixel (5 types)
    monochrome to max. 64k colors.
- Large frame memory space
  - Maximum 2M bytes graphic memory
    128k bytes character memory
    separated from the MPU memory
  - Available to maximum 4096 × 4096 high-resolution CRT (1 bit/pixel mode)
- Various CRT display controls
  - Split screens (3 displays and 1 window)
  - Zooming up (1 to 16 times)
  - Scroll (Vertical and horizontal)
  - Independent control of X and Y zoom factors
- External synchronization
  - Synchronization between ACRTCs or between the ACRTC and external device (ex. TV system or other controller)
- Two programmable cursors
- Three access modes
  - Non-interleaved (single access), interleaved, and superimposed modes
- Three scan modes
  - Non-interlace, Interlace Sync. and Interlace Sync. & Video modes
- DMA interface
- Interrupt request to MPU
- 256 characters/line, 32 rasters/line, 4096 rasters/screen
- 38 high-level commands
- Maximum clock frequency 8 MHz
- +5V single power supply
- CMOS, power consumption: 400 mW (maximum)

HD63484-8

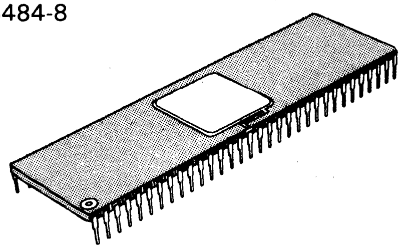

(DC-64)

HD63484P-8

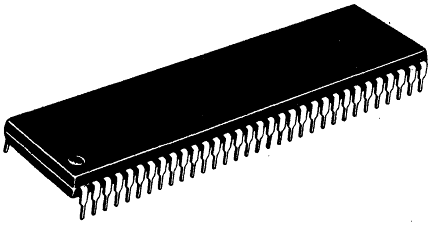

(DP-64)

HD63484CP-8

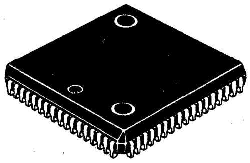

(CP-68)

■ TYPE OF PRODUCTS

ACRTC	Clock Frequency (2CLK)	Packaging
HD63484-8	8 MHz	DC-64
HD63484P-8	8 MHz	DP-64
HD63484CP-8	8 MHz	CP-68

HD63701XOP, HD637A01XOP, HD637B01XOP ZTAT MICRO

JULY, 1985

HITACHI

The HD63701X0 is a high performance 8-bit CMOS single chip microcomputer unit (MCU) which, including 4k bytes of PROM, is pin compatible with the HD6301X0.

The HD63701X0 contains 4k bytes of PROM, 192 bytes of RAM, serial communication interface and 53 parallel I/O pins in addition to CPU. It includes functions of halt, memory ready, low speed access and releasing external bus at system expansion.

The HD63701X0 is available in a 64-pin shrunk plastic package. It can be programmed in the same procedure as 2732A type EPROM.

■ FEATURES

- Instruction Set Compatible with the HD6301X0
- 4k Bytes of PROM (compatible with 2732A type)
- 192 Bytes of RAM
- 53 Parallel I/O Pins
  24 I/O Common Pins (Port 2, 3, 6)
  21 Output Pins (Port1, 4, 7)
  8 Input Pins (Port 5)
- Driving Darlington Transistor (Port 2, 6)
- 16-bit Programmable Timer
  Input Capture Register x 1
  Free Running Counter x 1
  Output Compare Register x 2
- 8-bit Reloadable Timer
  External Event Count
  Spare Wave Occurrence
- Serial Communication Interface (SCI)
  Asynchronous Mode/Clock Synchronous Mode
  3 Transfer Formats (Asynchronous Mode)
  6 Clock Sources
- Memory Ready for Low Speed Memory Access
- Halt
- Error-Detection (Address Error, Op-code Error)
- Interrupts — 3 External, 7 Internal
- Operation Mode
  MCU Mode
    Mode 1 — Expanded (Internal ROM Inhibited)
    Mode 2 — Expanded (Internal ROM Valid)
    Mode 3 — Single-chip Mode
  PROM Mode
- Up to 65k Bytes of Address Space
- Low Power Dissipation Mode
  Sleep
  Standby
- Minimum Instruction Execution Time — 0.5μs (f=2.0MHz)
- Wide Operation Range
  V_{CC}=5V±10%
    f=0.1 to 1.0MHz; HD63701X0
    f=0.1 to 1.5MHz; HD637A01X0
    f=0.1 to 2.0MHz; HD637B01X0

HD63701XOP, HD637A01XOP,
HD637B01XOP

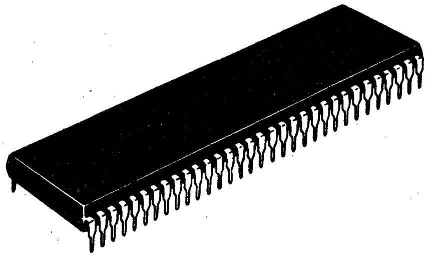

(DP-64S)

■ **PIN ARRANGEMENT**

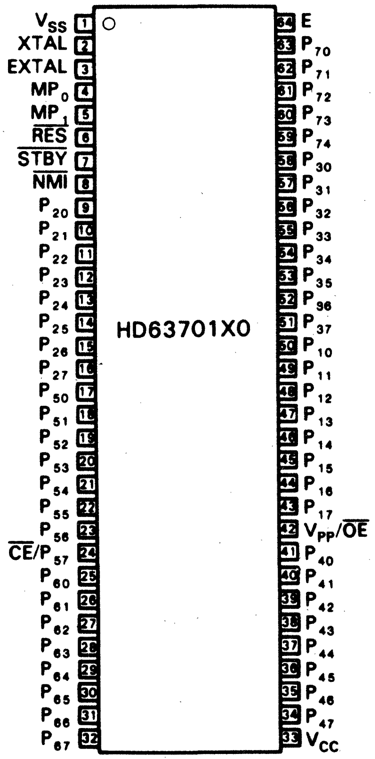
V_{SS} 1
XTAL 2
EXTAL 3
MP_0 4
MP_1 5
$\overline{RES}$ 6
$\overline{STBY}$ 7
$\overline{NMI}$ 8
P_{20} 9
P_{21} 10
P_{22} 11
P_{23} 12
P_{24} 13
P_{25} 14
P_{26} 15
P_{27} 16
P_{50} 17
P_{51} 18
P_{52} 19
P_{53} 20
P_{54} 21
P_{55} 22
P_{56} 23
$\overline{CE}/P_{57}$ 24
P_{60} 25
P_{61} 26
P_{62} 27
P_{63} 28
P_{64} 29
P_{65} 30
P_{66} 31
P_{67} 32
64 E
63 P_{70}
62 P_{71}
61 P_{72}
60 P_{73}
59 P_{74}
58 P_{30}
57 P_{31}
56 P_{32}
55 P_{33}
54 P_{34}
53 P_{35}
52 P_{36}
51 P_{37}
50 P_{10}
49 P_{11}
48 P_{12}
47 P_{13}
46 P_{14}
45 P_{15}
44 P_{16}
43 P_{17}
42 $V_{PP}/\overline{OE}$
41 P_{40}
40 P_{41}
39 P_{42}
38 P_{43}
37 P_{44}
36 P_{45}
35 P_{46}
34 P_{47}
33 V_{CC}
HD63701X0

(Top View)

HD63705V0P, HD637A05V0P, HD637B05V0P
ZTAT MICRO

JULY, 1985

HITACHI

The HD63705V0 is an 8-bit CMOS single chip microcomputer unit (MCU) which includes 4k bytes of PROM and is object code compatible with the HD6305V0.

This MCU contains a CPU, clock oscillator, 4k bytes of PROM, 192 bytes of RAM, 31 parallel I/O pins, two timers and a serial communication interface (SCI).

In addition to CMOS technology, it provides power saving STOP, WAIT and STANDBY modes, further reducing its already low power consumption.

HD63705V0P, HD637A05V0P,
HD637B05V0P

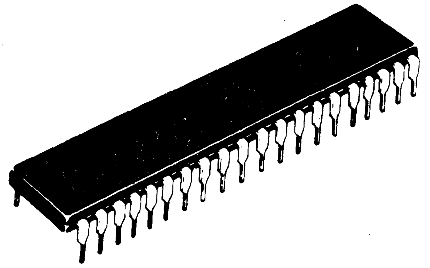

(DP-40)

■ HARDWARE FEATURES

- Pin compatible with HD6305V0 and HD6305U0
- 4096 bytes of PROM
- 192 bytes of RAM
- 31 I/O terminals
- Two Timers
  - a 8-bit timer with a 7-bit prescaler (software programmable prescaler ; event counter)
  - a 15-bit timer (capable of being used as the SCI clock divider)
- On-chip serial interface circuit (synchronized with clock)
- Six interrupts (two external, two timer, one serial and one software)
- Low power modes
  - Wait mode .... Internal oscillator remains active. The CPU processing is halted. The timer, the SCI, and interrupts can function normally. The contents of all registers remain unchanged, except that I bit of the condition code register is cleared.
  - Stop mode .... Internal oscillator is halted. RAM, I/O terminals and all registers except I bit of the condition code register, bits 6 and 7 of the timer control register, and bits 4, 5, 6 and 7 of the SCI status register remain unchanged.
  - Standby mode .... Internal oscillator is halted. The data of RAM is unchanged. The MCU internal registers are reset.
- Minimum instruction cycle time

HD63705V0	1μs (f = 1 MHz)
HD637A05V0	0.67μs (f = 1.5 MHz)
HD637B05V0	0.5μs (f = 2 MHz)

Wide operating range

HD63705V0	f = 0.1 to 1 MHz (Vcc = 5V ± 10%)
HD637A05V0	f = 0.1 to 1.5 MHz (Vcc = 5V ± 10%)
HD637B05V0	f = 0.1 to 2 MHz (Vcc = 5V ± 10%)

- Complete development system support by an emulator
- Operating modes .... MCU mode

■ PIN ARRANGEMENT

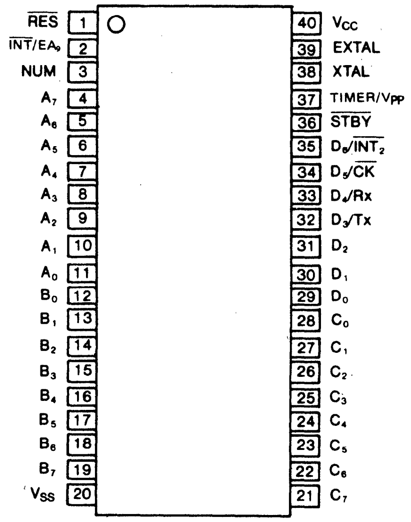
$\overline{RES}$ 1
$\overline{INT}/EA_0$ 2
NUM 3
A_7 4
A_6 5
A_5 6
A_4 7
A_3 8
A_2 9
A_1 10
A_0 11
B_0 12
B_1 13
B_2 14
B_3 15
B_4 16
B_5 17
B_6 18
B_7 19
V_{SS} 20
40 V_{CC}
39 EXTAL
38 XTAL
37 TIMER/V_{PP}
36 $\overline{STBY}$
35 $D_6/\overline{INT_2}$
34 $D_5/\overline{CK}$
33 D_4/Rx
32 D_3/Tx
31 D_2
30 D_1
29 D_0
28 C_0
27 C_1
26 C_2
25 C_3
24 C_4
23 C_5
22 C_6
21 C_7

(Top View)

IMS T414 transputer

IMS T414: The IMS T414 integrates a 32-bit microprocessor, four standard transputer communications links, 2K bytes of on-chip RAM, a memory interface and peripheral interfacing on a single 1.5 micron CMOS chip.

Processor: The design of the T414 achieves compact programs, efficient high level language implementation and provides direct support for the occam model of concurrency. Procedure calls, process switching and interrupt latency are all sub-microsecond. The T414 provides high performance arithmetic and direct support for floating point operations.

The processor shares its time between any number of concurrent processes. A process which is waiting for communication or a timeout does not consume any processor time. Two levels of process priority enable fast interrupt response to be achieved.

Links: The T414 uses a DMA block transfer mechanism to transfer messages between its memory and another transputer product via the INMOS links. The link interfaces and the processor all operate concurrently, allowing the processing to continue while the data is being transferred on all of the links.

Memory: The 2K bytes of RAM provide a maximum data rate of 80 Mbytes/s with multiport access for the processor and links.

Memory interface: The T414 can directly access a linear address space up to 4 Gbytes. The 32 bit wide memory interface uses multiplexed data and address lines and provides a data rate of up to 25 MBytes/s. A configurable memory controller provides all timing, control and DRAM refresh signals for a wide variety of mixed memory systems.

Peripheral interface: The memory controller supports memory mapped peripherals, which may use DMA. Links may be interfaced to peripherals via an INMOS link adaptor. A peripheral can request attention via the event pin.

Time: The processor includes timers for both high and low priority processes.

T414 block diagram

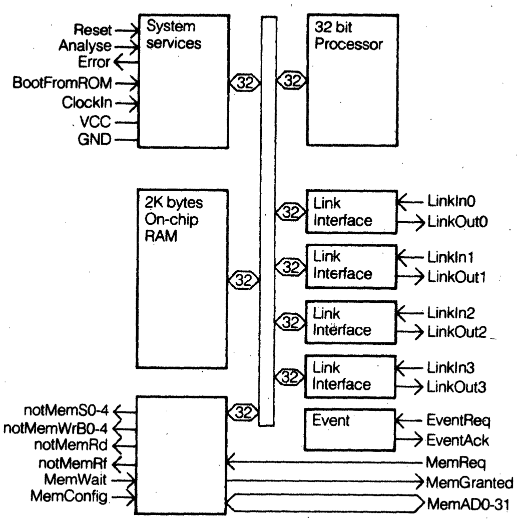

Error handling: High-level language execution is made secure with array bounds checking, arithmetic overflow detection, etc. A flag is set when an error is detected. The error can be handled internally by software or externally by sensing the error pin. System state is preserved for subsequent analysis.

Other Products: The IMS T212 16-Bit Transputer provides a non-multiplexed 100ns cycle external memory interface optimized for fast static RAM. It is both software and hardware compatible with the IMS T414. The IMS C001 and IMS C002 Link Adaptors allow INMOS Serial Links to be connected to a wide variety of industry standard processors and peripherals. The IMS B001, IMS B002 and IMS B004 Evaluation Boards and IMS D100, IMS D600 and IMS D700 Transputer Development System are also available to ease evaluation and design of transputer systems.

inmos
P.O. Box 16000 • Colorado Springs, Colorado 80935 • (303) 630-4000 • TWX 910 920 4904
Whitefriars • Lewins Mead Bristol BSI 2NP • England • Phone Bristol 0272 290 861 • TLX: 851-444723

INMOS reserves the right to make changes in specifications at any time and without notice. The information furnished by INMOS in this publication is believed to be accurate; however, no responsibility is assumed for its use; nor for any infingements of patents or other rights of third parties resulting from its use. No license is granted under any patents, trademarks, or other rights of INMOS.

and occam are trademarks of the INMOS Group of Companies.

IMS C001 link adaptor

Features

- High performance system interconnect
- Two handshaken byte-wide interfaces
- INMOS serial link
- 10M bits/sec data rate
- Advanced 1.5 micron CMOS technology
- Standard 600 mil 28 pin DIP

Applications

- Programmable I/O pins for a transputer
- High performance handshaken serial link between microprocessor systems
- Link between transputers running at different clock frequencies

BLOCK DIAGRAM

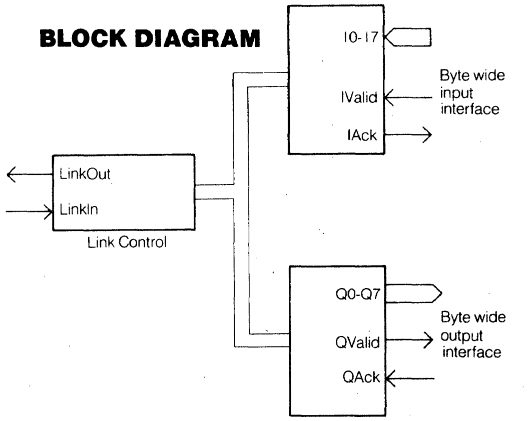
I0-I7
IValid
IAck
Byte wide input interface
LinkOut
LinkIn
Link Control
Q0-Q7
QValid
QAck
Byte wide output interface

C001 signal list

The C001 is available in a 600 mil 28 pin DIP package.

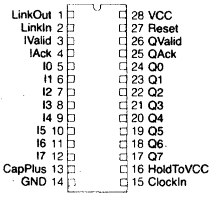
LinkOut 1
LinkIn 2
IValid 3
IAck 4
I0 5
I1 6
I2 7
I3 8
I4 9
I5 10
I6 11
I7 12
CapPlus 13
GND 14
28 VCC
27 Reset
26 QValid
25 QAck
24 Q0
23 Q1
22 Q2
21 Q3
20 Q4
19 Q5
18 Q6
17 Q7
16 HoldToVCC
15 ClockIn

IMS C002 link adaptor

Features

- High performance system interconnect
- Bi-directional handshaken byte-wide interface
- INMOS serial link
- 10M bits/sec data rate
- Interrupt control for microprocessor buses
- Advanced 1.5 micron CMOS technology
- Standard 300 mil 24 pin DIP

Applications

- Interface between transputers and industry standard peripherals
- High performance handshaken link between standard microprocessor buses

BLOCK DIAGRAM

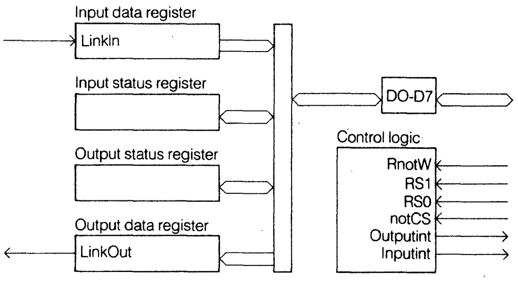
Input data register
LinkIn
Input status register
Output status register
Output data register
LinkOut
DO-D7
Control logic
RnotW
RS1
RS0
notCS
Outputint
Inputint

C002 signal list

The C002 is available in a 300 mil 24 pin DIP package.

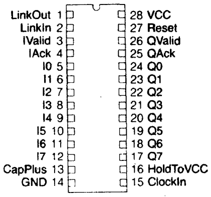
LinkOut 1
LinkIn 2
IValid 3
IAck 4
I0 5
I1 6
I2 7
I3 8
I4 9
I5 10
I6 11
I7 12
CapPlus 13
GND 14
28 VCC
27 Reset
26 QValid
25 QAck
24 Q0
23 Q1
22 Q2
21 Q3
20 Q4
19 Q5
18 Q6
17 Q7
16 HoldToVCC
15 ClockIn

inmos

P.O. Box 16000 • Colorado Springs, Colorado 80935 • (303) 630-4000 • TWX 910 920 4904
Whitefriars • Lewins Mead Bristol BSI 2NP • England • Phone Bristol 0272 290 861 • TLX: 851-444723

INMOS reserves the right to make changes in specifications at any time and without notice. The information furnished by INMOS in this publication is believed to be accurate; however, no responsibility is assumed for its use; nor for any infingements of patents or other rights of third parties resulting from its use. No license is granted under any patents, trademarks, or other rights of INMOS.

and occam are trademarks of the INMOS Group of Companies.

High-Speed CMOS MICROSLICE™ Products

Part Number	Description	Replaces	Oper. Power (max) (mW) Com'l.	Mil.	Availability
IDT39C01C	4-Bit μP Slice	Am2901B,C; IDM2901A,-2; SFC2901B,C	165	192.5	NOW
IDT39C10B	12-Bit Sequencer with 33-Deep Stack	AM2910A	440	550	NOW
IDT49C410	16-Bit Sequencer with 33-Deep Stack	UNIQUE	500	600	NOW
IDT39C02A	Carry Lookahead Generator	Am2902A	—	—	NOW
IDT49C402	16-Bit μP Slice Quad 2901 with 8 Additional Destination Functions and a 64 × 16 Dual Port Memory Capacity	UNIQUE	—	—	DEC '85
IDT49C401	16-Bit μP Slice	IMI4X2901B	—	—	JAN '86
IDT39C60A	16-Bit Cascadeable Error Detection Correction Unit	Am2960-1,A	—	—	JAN '86
IDT39C03A	4-Bit μP Slice	Am29203, SFC2903	—	—	MAR '86
IDT39C203	4-Bit μP Slice	Am29203	—	—	APR '86

Integrated Device Technology, Inc.

FOUR-BIT CMOS MICROPROCESSOR SLICE

PRELIMINARY
IDT39C01C

MICROSLICE™ PRODUCT

FEATURES:

- Low power
  - —I_{CC} (max.)
    Military—35mA
    Commercial—30mA
- Fast
  - —Meets existing 2901C speeds
- Eight-function ALU
  - —Performs addition, two subtraction operations and five logic functions on two source operands
- Expandable
  - —Longer word lengths achieved through cascading any number of IDT39C01Cs
- Improved V_{CC} tolerance
  - —±10% guaranteed for both commercial and military temperature ranges
- Four status flags
  - —Carry, overflow, negative and zero
- Pin compatible and functionally equivalent to the 2901A,B,C

DESCRIPTION:

The IDT39C01C is a high-speed, cascadable ALU which can be used to implement CPUs, peripheral controllers and programmable microprocessors. The IDT39C01C's microinstruction flexibility allows for easy emulation of most digital computers.

This extremely low-power yet high-speed ALU consists of a 16-word by 4-bit two-port RAM; a high-speed ALU; and the required shifting, decoding and multiplexing logic. It is expandable in 4-bit increments, contains a flag output along with three-state data outputs, and can easily use either a ripple carry or full look-ahead carry. The nine bit microinstruction word is organized into three groups of three bits each and selects the ALU destination register, ALU source operands and the ALU function.

The IDT39C01C is fabricated using CEMOS™ II, a single poly double metal CMOS technology designed for high-performance and high-reliability.

The IDT39C01C is a pin compatible, performance-enhanced, functional replacement for all versions of the 2901.

PIN CONFIGURATIONS

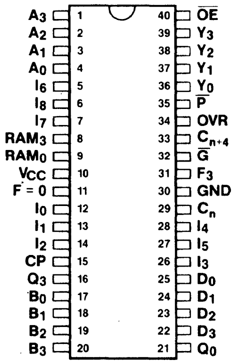

A3 1
A2 2
A1 3
A0 4
I6 5
I8 6
I7 7
RAM3 8
RAM0 9
Vcc 10
F = 0 11
I0 12
I1 13
I2 14
CP 15
Q3 16
B0 17
B1 18
B2 19
B3 20
40 OE
39 Y3
38 Y2
37 Y1
36 Y0
35 P
34 OVR
33 Cn+4
32 G
31 F3
30 GND
29 Cn
28 I4
27 I5
26 I3
25 D0
24 D1
23 D2
22 D3
21 Q0

DIP
TOP VIEW

IDT39C01C-002

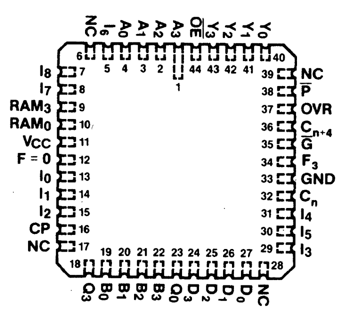

NC 6
I6 5
A0 4
A1 3
A2 2
A3 1
OE 44
Y3 43
Y2 42
Y1 41
Y0 40
I8 7
I7 8
RAM3 9
RAM0 10
Vcc 11
F = 0 12
I0 13
I1 14
I2 15
CP 16
NC 17
39 NC
38 P
37 OVR
36 Cn+4
35 G
34 F3
33 GND
32 Cn
31 I4
30 I5
29 I3
Q3 18
Q0 28
B0 19
B1 20
B2 21
B3 22
Q0 23
D3 24
D2 25
D1 26
D0 27
NC 28

LCC
TOP VIEW

IDT39C01C-003

FUNCTIONAL BLOCK DIAGRAM

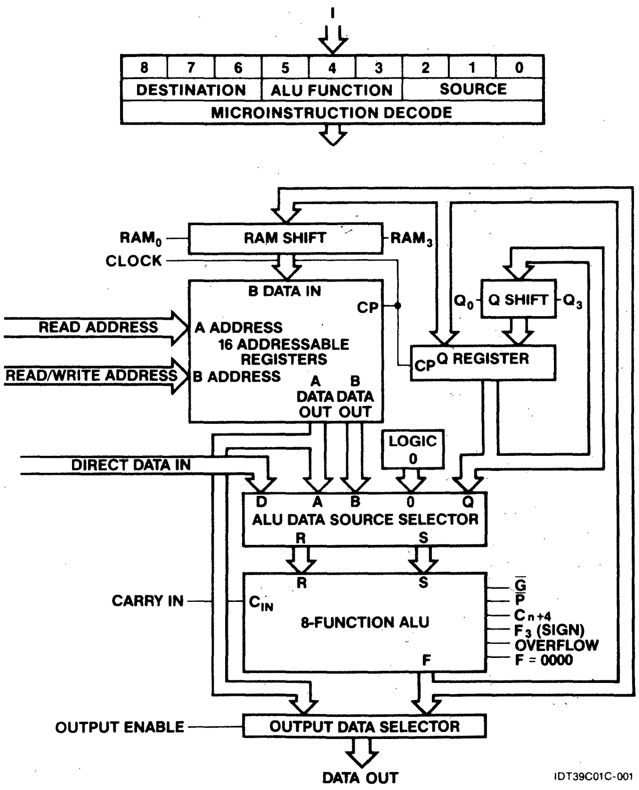

I
8 7 6 5 4 3 2 1 0
DESTINATION
ALU FUNCTION
SOURCE
MICROINSTRUCTION DECODE
RAM0
RAM SHIFT
RAM3
CLOCK
B DATA IN
CP
READ ADDRESS
A ADDRESS
16 ADDRESSABLE REGISTERS
READ/WRITE ADDRESS
B ADDRESS
A DATA OUT
B DATA OUT
Q0
Q SHIFT
Q3
CP Q REGISTER
LOGIC 0
DIRECT DATA IN
D A B 0 Q
ALU DATA SOURCE SELECTOR
R S
CARRY IN
CIN
8-FUNCTION ALU
F
G
P
Cn+4
F3 (SIGN)
OVERFLOW
F = 0000
OUTPUT ENABLE
OUTPUT DATA SELECTOR
DATA OUT

IDT39C01C-001

Integrated Device Technology

MICROPROCESSOR

MICROSLICE and CEMOS are trademarks of Integrated Device Technology, Incorporated.

MILITARY AND COMMERCIAL TEMPERATURE RANGES **OCTOBER 1985**

©1985 Integrated Device Technology, Incorporated.

Printed in the U.S.A.

Integrated Device Technology

MICROPROCESSOR

Integrated Device Technology, Inc

12-BIT CMOS MICROPROGRAM SEQUENCER

PRELIMINARY
IDT39C10B

MICROSLICE™ PRODUCT

FEATURES:

- Low-power
  - —I_{CC} (max.)
    Military — 100mA
    Commercial — 80mA
- Fast
  - —Meets 2901A speeds and output drive
- 33-Deep stack
  - —Accommodates highly nested loops and subroutines microcode
- 12-Bit address width
- 12-Bit internal loop counter
- 16 powerful microinstructions
- 3 enables control branch address sources
- Available in 40-pin DIP and 44-pin LCC

DESCRIPTION:

The IDT39C10B microprogram sequencer is designed for use in high-performance microprogram state machines. This microprogram sequencer is intended for use in controlling the sequence of microinstructions executed in the microprogram memory. The IDT39C10B provides several conditional branch instructions that allow branching to any microinstruction within the 4K microword address space. A 33-deep last-in, first-out stack provides for a very powerful microprogram subroutine return linkage and looping capability. With this depth of a microprogram return stack, the microprogrammer has maximum flexibility in nesting subroutines and loops. The counter contained in the IDT39C10B provides for microinstruction loop counts of up to 4096 in terms of total count length.

The IDT39C10B provides a 12-bit address to the microprogram memory. This microprogram sequencer selects one of four sources for the address: these are (1) the microprogram address register, (2) external direct input, (3) internal register counter, and (4) the 33-deep LIFO stack. The microprogram counter usually contains an address that is one greater than the microinstruction currently being executed in the microprogram pipeline register.

The IDT39C10B is fabricated using CEMOS™II, a single poly, double metal CMOS technology designed for high performance and high reliability. This device is a pin-compatible, performance-enhanced, functional replacement for the 2910A.

PIN CONFIGURATION

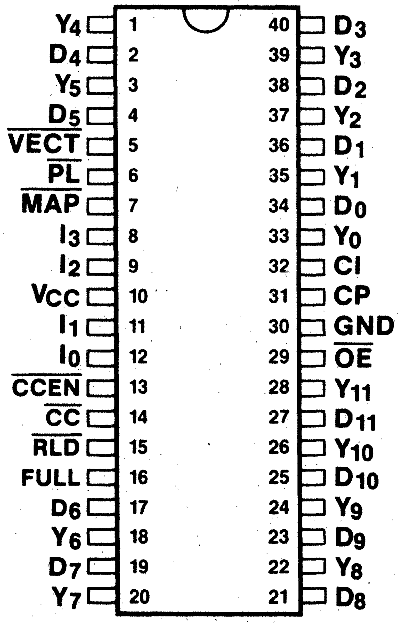

Y_4 1
D_4 2
Y_5 3
D_5 4
$\overline{VECT}$ 5
$\overline{PL}$ 6
$\overline{MAP}$ 7
I_3 8
I_2 9
V_{CC} 10
I_1 11
I_0 12
$\overline{CCEN}$ 13
$\overline{CC}$ 14
$\overline{RLD}$ 15
FULL 16
D_6 17
Y_6 18
D_7 19
Y_7 20
40 D_3
39 Y_3
38 D_2
37 Y_2
36 D_1
35 Y_1
34 D_0
33 Y_0
32 CI
31 CP
30 GND
29 $\overline{OE}$
28 Y_{11}
27 D_{11}
26 Y_{10}
25 D_{10}
24 Y_9
23 D_9
22 Y_8
21 D_8

DIP
TOP VIEW

FUNCTIONAL BLOCK DIAGRAM

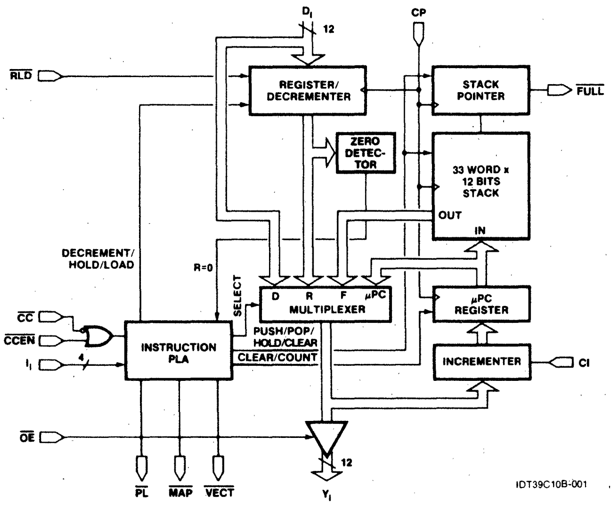

D_I
12
CP
$\overline{RLD}$
REGISTER/ DECREMENTER
STACK POINTER
$\overline{FULL}$
ZERO DETECTOR
33 WORD x 12 BITS STACK
OUT
IN
DECREMENT/ HOLD/LOAD
R=0
SELECT
D R F μPC
MULTIPLEXER
μPC REGISTER
$\overline{CC}$
$\overline{CCEN}$
I_I
4
INSTRUCTION PLA
PUSH/POP/ HOLD/CLEAR
CLEAR/COUNT
INCREMENTER
CI
$\overline{OE}$
12
$\overline{PL}$
$\overline{MAP}$
$\overline{VECT}$
Y_I
IDT39C10B-001

MICROSLICE and CEMOS are trademarks of Integrated Device Technology, Incorporated.

MILITARY AND COMMERCIAL TEMPERATURE RANGES **OCTOBER 1985**

©1985 Integrated Device Technology, Incorporated.

Printed in the U.S.A.

Integrated Device Technology, Inc.

CMOS CARRY LOOKAHEAD GENERATOR

IDT39C02A

MICROSLICE™ PRODUCT

FEATURES:

- Provides lookahead carries across any number of 4-bit microprocessor ALUs
- Very high-speed and output drive over full temperature and voltage supply extremes
- 6ns typical propagation delay
- I_{OL} = 32mA over full military temperature range
- CMOS power levels (5μW typ. static)
- Both CMOS and TTL output compatible
- Substantially lower input current levels than bipolar (5μA max.)
- 100% product assurance screening to MIL-STD-883, Class B available
- JEDEC standard pinout for DIP and LCC

DESCRIPTION:

The IDT39C02A is a high-speed carry lookahead generator built using advanced CEMOS™ II, a dual metal 1.5μm CMOS technology. The IDT39C02A is generally used with an arithmetic logic unit to provide high-speed lookahead over larger word lengths.

The IDT39C02A is a pin-compatible, performance enhanced, functional replacement for all versions of the 2902.

PIN CONFIGURATIONS

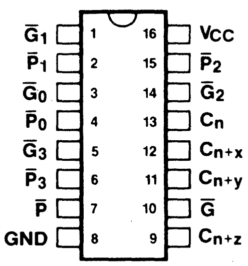
$\overline{G}_1$ 1
$\overline{P}_1$ 2
$\overline{G}_0$ 3
$\overline{P}_0$ 4
$\overline{G}_3$ 5
$\overline{P}_3$ 6
$\overline{P}$ 7
GND 8
16 V_{CC}
15 $\overline{P}_2$
14 $\overline{G}_2$
13 C_n
12 C_{n+x}
11 C_{n+y}
10 $\overline{G}$
9 C_{n+z}

SSDFCT182-001

DIP
TOP VIEW

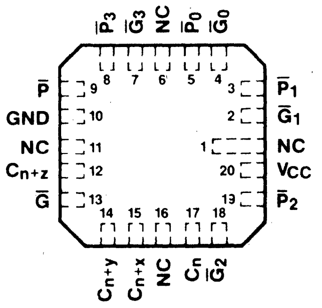
$\overline{P}_3$ 8
$\overline{G}_3$ 7
NC 6
$\overline{P}_0$ 5
$\overline{G}_0$ 4
$\overline{P}$ 9
GND 10
NC 11
C_{n+z} 12
$\overline{G}$ 13
3 $\overline{P}_1$
2 $\overline{G}_1$
1 NC
20 V_{CC}
19 $\overline{P}_2$
14 C_{n+y}
15 C_{n+x}
16 NC
17 C_n
18 $\overline{G}_2$

SSDFCT182-002

LCC
TOP VIEW

FUNCTIONAL BLOCK DIAGRAM

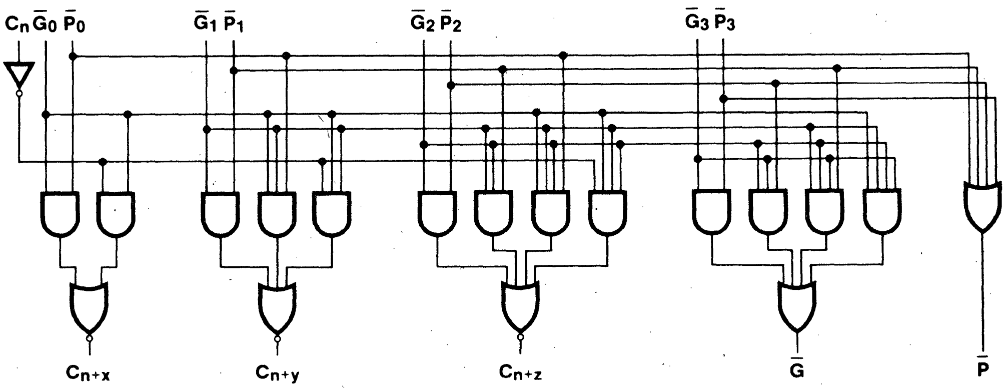
C_n $\overline{G}_0$ $\overline{P}_0$
$\overline{G}_1$ $\overline{P}_1$
$\overline{G}_2$ $\overline{P}_2$
$\overline{G}_3$ $\overline{P}_3$
C_{n+x}
C_{n+y}
C_{n+z}
$\overline{G}$
$\overline{P}$

SSDFCT182-003

MICROSLICE and CEMOS are trademarks of Integrated Device Technology, Incorporated.

©1985 Integrated Device Technology, Incorporated.

Printed in the U.S.A.

Integrated Device Technology Inc

16-BIT CMOS MICROPROGRAM SEQUENCER

ADVANCE INFORMATION
IDT49C410

MICROSLICE™ PRODUCT

FEATURES:

- 16-Bit wide address path
  - —Address up to 65536 words of microprogram memory
- 16-Bit loop counter
  - —Pre-settable down-counter for counting loop iterations and repeating instructions
- Low power CEMOS™ II
  - —I_{CC} (max.)
    Military — 90mA
    Commercial — 110mA
- Fast
  - —Supports 100ns cycle times
- 33-Deep word stack
  - —Accomodates highly nested microcode and interrupt intensive applications
- 16 Powerful microinstructions
  - —Executes 16 sequence control instructions
- Available in 48-pin DIP (600 mil), THINDIP (400 mil x 70 mil centers), and LCC
- Three enables control branch address sources
- Four address sources
  - —Microprogram address can be selected from microprogram counter, direct input, push/pop stack, or holding register
- 2910A Instruction compatiblity
  - —Instruction, function and opcode compatible with the 2910A
- Military product available 100% screened to MIL-STD-883, Class B

DESCRIPTION:

The IDT49C410 is architecture and function code compatible with the 2910A but has been expanded to a 16-bit address path, thus allowing for programs up to 65536 words in length. It is a microprogram address sequencer intended for controlling the sequence of execution of microinstructions stored in microprogram memory. Besides the capability of sequential access, it provides conditional branching to any microinstruction within its 65536 microword range.

The 33-deep stack provides microsubroutine return linkage and looping capability. The deep stack can be used for interrupt intensive and highly nested microcode applications. Microinstruction loop count control is provided with a count capacity of 65536.

During each microinstruction, the microprogram controller provides a 16-bit address from one of four sources: 1) the microprogram address register (μPC), which usually contains an address one greater than the previous address; 2) an external (direct) input (D); 3) a register/counter (R) retaining data loaded during a previous microinstruction; or 4) a last-in, first-out stack (F).

The IDT49C410 is fabricated using CEMOS II, a single poly double metal CMOS technology designed for high-performance and high-reliability.

The IDT49C410 is a pin compatible, performance-enhanced, easily upgradable version of the 2910A.

The IDT49C410 is available in a 48-pin DIP (600 mil x 100 mil centers or space-saving 400 mil x 70 mil centers) and LCC.

PIN CONFIGURATIONS

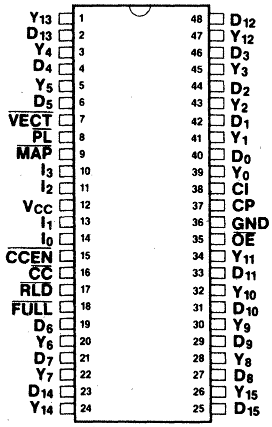
1 Y_{13}
2 D_{13}
3 Y_4
4 D_4
5 Y_5
6 D_5
7 $\overline{VECT}$
8 $\overline{PL}$
9 $\overline{MAP}$
10 I_3
11 I_2
12 V_{CC}
13 I_1
14 I_0
15 $\overline{CCEN}$
16 $\overline{CC}$
17 $\overline{RLD}$
18 $\overline{FULL}$
19 D_6
20 Y_6
21 D_7
22 Y_7
23 D_{14}
24 Y_{14}
48 D_{12}
47 Y_{12}
46 D_3
45 Y_3
44 D_2
43 Y_2
42 D_1
41 Y_1
40 D_0
39 Y_0
38 CI
37 CP
36 GND
35 $\overline{OE}$
34 Y_{11}
33 D_{11}
32 Y_{10}
31 D_{10}
30 Y_9
29 D_9
28 Y_8
27 D_8
26 Y_{15}
25 D_{15}

DIP
TOP VIEW
(600 mil x 100 mil centers)
(400 mil x 70 mil centers)

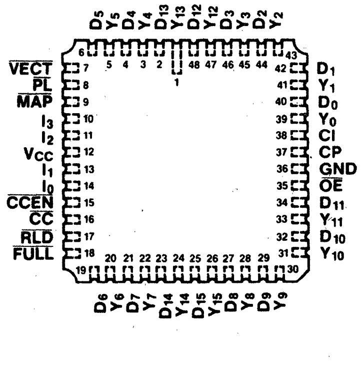
D_5 Y_5 D_4 Y_4 D_{13} Y_{13} D_{12} Y_{12} D_3 Y_3 D_2 Y_2
6 5 4 3 2 1 48 47 46 45 44 43
7 $\overline{VECT}$
8 $\overline{PL}$
9 $\overline{MAP}$
10 I_3
11 I_2
12 V_{CC}
13 I_1
14 I_0
15 $\overline{CCEN}$
16 $\overline{CC}$
17 $\overline{RLD}$
18 $\overline{FULL}$
42 D_1
41 Y_1
40 D_0
39 Y_0
38 CI
37 CP
36 GND
35 $\overline{OE}$
34 D_{11}
33 Y_{11}
32 D_{10}
31 Y_{10}
19 20 21 22 23 24 25 26 27 28 29 30
D_6 Y_6 D_7 Y_7 D_{14} Y_{14} D_{15} Y_{15} D_8 Y_8 D_9 Y_9

LCC
TOP VIEW
(560 mil x 560 mil)

FUNCTIONAL BLOCK DIAGRAM

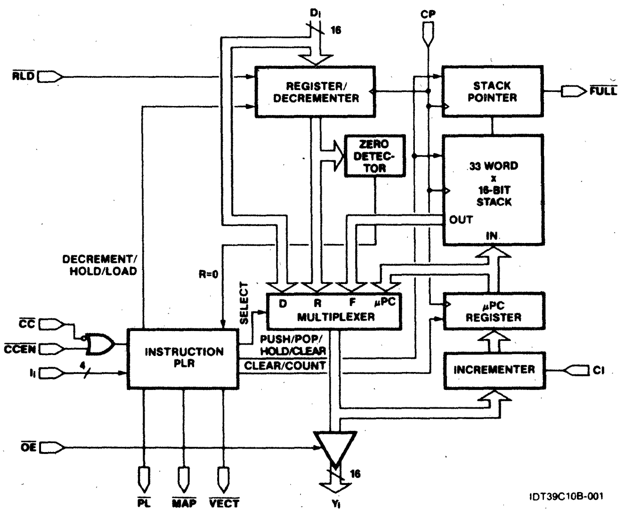
D_I
16
CP
$\overline{RLD}$
REGISTER/ DECREMENTER
STACK POINTER
$\overline{FULL}$
ZERO DETEC- TOR
33 WORD x 16-BIT STACK
OUT
IN
DECREMENT/ HOLD/LOAD
R=0
SELECT
D R F μPC
MULTIPLEXER
μPC REGISTER
$\overline{CC}$
$\overline{CCEN}$
I_i
4
INSTRUCTION PLR
PUSH/POP/ HOLD/CLEAR
CLEAR/COUNT
INCREMENTER
CI
$\overline{OE}$
$\overline{PL}$
$\overline{MAP}$
$\overline{VECT}$
16
Y_i
IDT39C10B-001

MICROSLICE and CEMOS are trademarks of Integrated Device Technology, Incorporated.

MILITARY AND COMMERCIAL TEMPERATURE RANGES **OCTOBER 1985**

©1985 Integrated Device Technology, Incorporated.

Printed in the U.S.A.

Integrated Device Technology, Inc.

16-BIT CMOS MICROPROCESSOR SLICE

ADVANCE INFORMATION
IDT49C402

MICROSLICE™ PRODUCT

FEATURES:

- High performance CEMOS™ II
- 64-Word x 16-bit RAM
  - —2 output ports
  - —1 input port
- Instruction set functionally identical to 2901
  - —8 source operand pairs
  - —8 ALU operations
  - —8 destination functions
- 8 additional new destination functions
- Fully cascadable
- 4 status flags
- 16-bit Q register
- 68-pin PGA, DIP (600 mil, 70 mil centers), LCC (25 and 50 mil centers)
- Military product 100% screened to MIL-STD-833, Class B

DESCRIPTION:

The IDT49C402 is a high-speed, fully cascadable 16-bit CMOS microprocessor slice unit which combines the standard functions of four 2901s and a 2902 with additional control features aimed at enhancing the performance of bit-slice microprocessor designs.

The IDT49C402 includes all of the normal functions associated with standard 2901 bit-slice operation: (a) a 3-bit instruction field (I_0,I_1,I_2) which controls the source operand selection for the ALU (b) a 3-bit microinstruction field (I_3,I_4,I_5) used to control the eight possible functions of the ALU (c) eight destination control functions which are selected by the microcode inputs (I_6,I_7,I_8) and (d) a tenth microinstruction input, I_9, offering eight additional destination control functions. This I_9 input, in conjunction with I_6, I_7, I_8, allows for shifting the Q register up and down, loading the RAM or Q register directly from the D inputs without going throught the ALU, and new combinations of destination functions with the RAM A-port output available at the Y output pins of the device. This eliminates bottlenecks of inputting data to the on-board RAM.

Also featured is an on-chip two-port RAM that contains 64 words by 16 bits, which is four times the number of working registers in a 2901.

The IDT49C402 is fabricated using CEMOS™II, a single poly double metal CMOS technology designed for high performance and high reliability. This performanace enhanced device features both bipolar speed and bipolar output drive capabilities while maintaining exceptional microinstruction speeds at greatly reduced CMOS power levels.

FUNCTIONAL BLOCK DIAGRAM

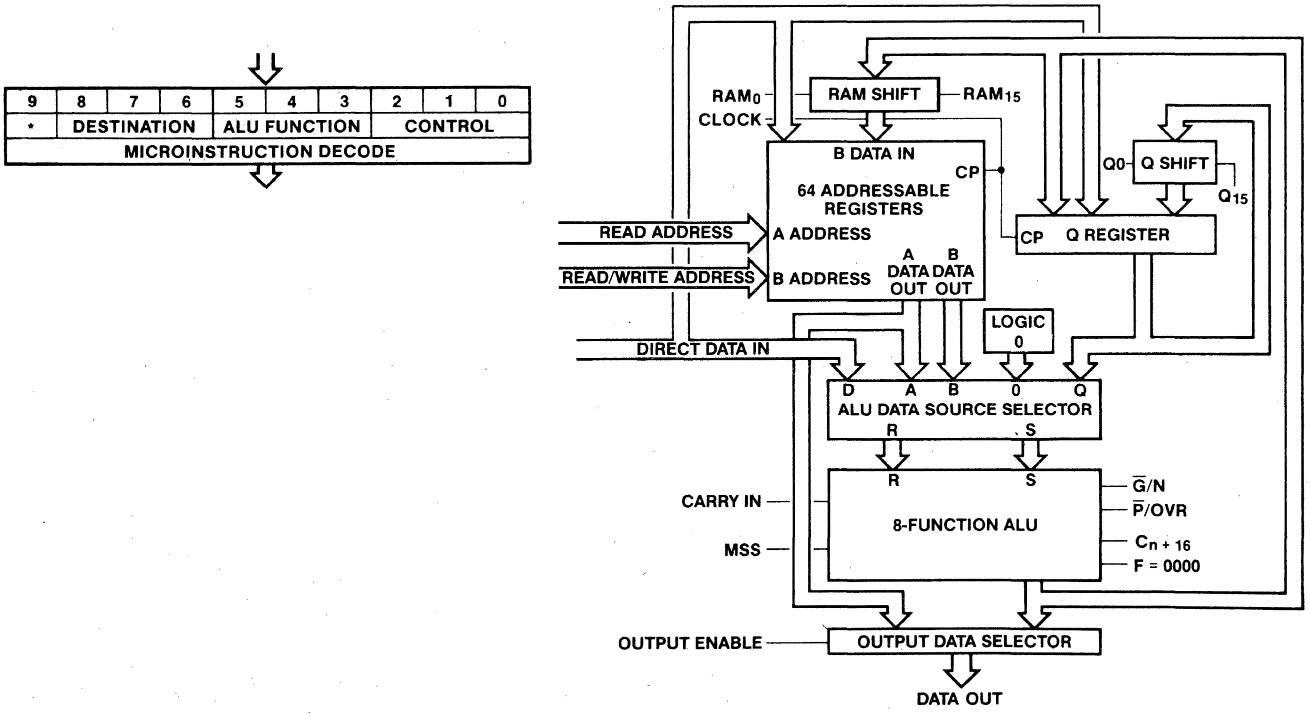
9
8
7
6
5
4
3
2
1
0
*
DESTINATION
ALU FUNCTION
CONTROL
MICROINSTRUCTION DECODE
RAM0
RAM SHIFT
RAM15
CLOCK
B DATA IN
CP
64 ADDRESSABLE REGISTERS
Q0
Q SHIFT
Q15
READ ADDRESS
A ADDRESS
CP
Q REGISTER
READ/WRITE ADDRESS
B ADDRESS
A DATA OUT
B DATA OUT
LOGIC 0
DIRECT DATA IN
D
A
B
0
Q
ALU DATA SOURCE SELECTOR
R
S
R
S
G/N
P/OVR
Cn + 16
F = 0000
CARRY IN
8-FUNCTION ALU
MSS
OUTPUT ENABLE
OUTPUT DATA SELECTOR
DATA OUT

CEMOS and MICROSLICE are trademarks of Integrated Device Technology, Inc.

MILITARY AND COMMERCIAL TEMPERATURE RANGES **OCTOBER 1985**

©1985 Integrated Device Technology, Inc.

Printed in U.S.A.

DESTINATION FUNCTIONS:

	RAM	Q	Y-OUT
2901 Functions (3-bits $I_{6,7,8}$, with I_9 open or high)	F-UP	Q-UP	F
	F-UP	—	F
	F-DOWN	Q-DOWN	F
	F-DOWN	—	F
	—	—	F
	—	LOAD F	F
	LOAD F	—	F
	LOAD F	—	A
Added IDT Functions (3-bits $I_{6,7,8}$, with I_9 low)	LOAD D	LOAD F	F
	LOAD D	LOAD F	A
	LOAD F	LOAD D	F
	LOAD F	LOAD D	A
	—	Q-UP	F
	—	Q-DOWN	F
	LOAD D	—	F
	—	LOAD D	F

SOURCE/ALU MICROINSTRUCTIONS

SOURCE OPERANDS 3-BITS	ALU FUNCTION 3-BITS
A,B	R+S
A,D	R-S
A,Q	S-R
D,Q	R OR S
A,0	R AND S
B,0	R EXOR S
D,0	R EXNOR S
Q,0	$\overline{R}$ AND S

PIN CONFIGURATIONS

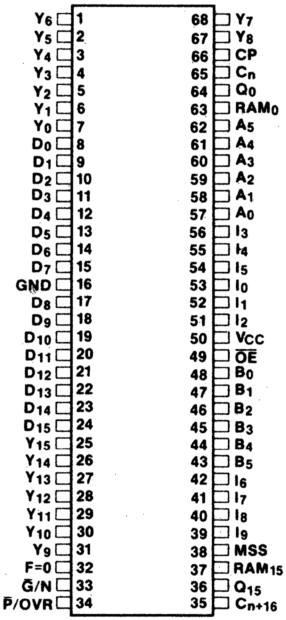
Y6 1
Y5 2
Y4 3
Y3 4
Y2 5
Y1 6
Y0 7
D0 8
D1 9
D2 10
D3 11
D4 12
D5 13
D6 14
D7 15
GND 16
D8 17
D9 18
D10 19
D11 20
D12 21
D13 22
D14 23
D15 24
Y15 25
Y14 26
Y13 27
Y12 28
Y11 29
Y10 30
Y9 31
F=0 32
G̅/N 33
P̅/OVR 34
68 Y7
67 Y8
66 CP
65 Cn
64 Q0
63 RAM0
62 A5
61 A4
60 A3
59 A2
58 A1
57 A0
56 I3
55 I4
54 I5
53 I0
52 I1
51 I2
50 VCC
49 O̅E̅
48 B0
47 B1
46 B2
45 B3
44 B4
43 B5
42 I6
41 I7
40 I8
39 I9
38 MSS
37 RAM15
36 Q15
35 Cn+16

68-PIN DIP
TOP VIEW
2.5 x 0.6 IN.
(70 MIL. CENTERS)

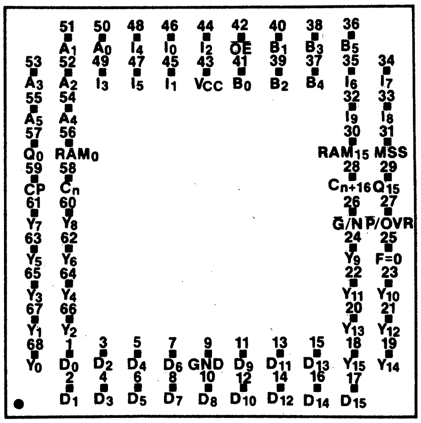
51 A1
50 A0
48 I4
46 I0
44 I2
42 O̅E̅
40 B1
38 B3
36 B5
53 A3
52 A2
49 I3
47 I5
45 I1
43 VCC
41 B0
39 B2
37 B4
35 I6
34 I7
55 A5
54 A4
32 I9
33 I8
57 Q0
56 RAM0
30 RAM15
31 MSS
59 CP
58 Cn
28 Cn+16
29 Q15
61 Y7
60 Y8
26 G̅/N
27 P̅/OVR
63 Y5
62 Y6
24 Y9
25 F=0
65 Y3
64 Y4
22 Y11
23 Y10
67 Y1
66 Y2
20 Y13
21 Y12
68 Y0
1 D0
3 D2
5 D4
7 D6
9 GND
11 D9
13 D11
15 D13
18 Y15
19 Y14
2 D1
4 D3
6 D5
8 D7
10 D8
12 D10
14 D12
16 D14
17 D15

68-PIN PGA
TOP VIEW
1.1 IN. SQ.

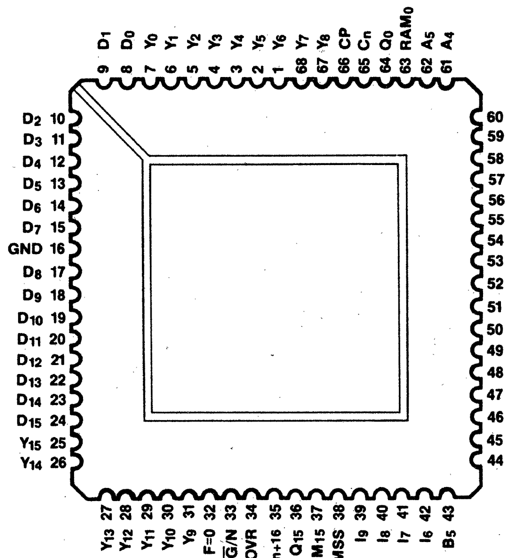
D1 9
D0 8
Y0 7
Y1 6
Y2 5
Y3 4
Y4 3
Y5 2
Y6 1
Y7 68
Y8 67
CP 66
Cn 65
Q0 64
RAM0 63
A5 62
A4 61
D2 10
D3 11
D4 12
D5 13
D6 14
D7 15
GND 16
D8 17
D9 18
D10 19
D11 20
D12 21
D13 22
D14 23
D15 24
Y15 25
Y14 26
60 A3
59 A2
58 A1
57 A0
56 I3
55 I4
54 I5
53 I0
52 I1
51 I2
50 VCC
49 O̅E̅
48 B0
47 B1
46 B2
45 B3
44 B4
Y13 27
Y12 28
Y11 29
Y10 30
Y9 31
F=0 32
G̅/N 33
P̅/OVR 34
Cn+16 35
Q15 36
RAM15 37
MSS 38
I9 39
I8 40
I7 41
I6 42
B5 43

68-PIN LCC
TOP VIEW
.95 IN. SQ. (50 MIL. CENTERS)
.56 IN. SQ. (25 MIL. CENTERS)

Integrated Device Technology, Inc.
3236 Scott Blvd., Santa Clara, CA 95054-3090 • Telephone: (408) 727-6116 • TWX 9103382070

Integrated Device Technology, Inc. reserves the right to make changes to the specifications in this data sheet in order to improve design or performance and to supply the best possible product.

Microcontrollers

BASIC PART NUMBER	DESCRIPTION	f_c MHz	INTERNAL MEMORY		PACKAGE	TEMPERATURE RANGE (°C)
			ROM	RAM		
IM80C48	8048/80C48 Family Compatible	6	1K x 8	64 x 8	PL, JL	0 — +70 −40 — +85
IM80C49	2X the memory of IM80C48	6	2K x 8	128 x 8	PL, JL	
IM80C35	Same as IM80C48 without ROM	6	None	64 x 8	PL, JL	
IM80C39	Same as IM80C49 without ROM	6	None	128 x 8	PL, JL	

Microprocessor Peripherals — See also Display Drivers, Counters, A/D, and D/A Converters.

TYPE	DESCRIPTION	f_C (MHz) Max	PACKAGE	TEMPERATURE RANGE (°C)
ICM7170*	μP-Compatible Real-Time Clock, Binary Time Format, Micropower Standby Operation (2μA @ 2.8V)	4.19	PG, JG	−40 — +85
IM6402	CMOS Industry Standard Compatible UART	1.0	PL	−40 — +85 −55 — +125
IM6402-1	High-Speed Version of IM6402	2.0	PL, JL	
IM6402A	10V Operating Version of IM6402	4.0	PL, JL	
IM6403	Like Corresponding IM6402	2.46	PL	−40 — +85 −55 — +125
IM6403-1	Device but with On-board Crystal	3.58	PL, JL	
IM6403A	Oscillator and Baud Rate Generator	6.0	PL, JL	
IM26C61*	Enhanced Programmable Communications Interface (USART)	5.06	PI, JI	−40°C— +85°C
IM26C62*	Enhanced Programmable Communications Interface with On-Board Crystal Oscillator	5.06	PI, JI	−40°C— +85°C
IM82C43*	CMOS I/O Expander for 80C48/49 Microcomputers		PG, JG	0 — +70 −40 — +85
IM4702/12	Baud Rate Generator	3.58	PE, JE	−40 — +85

IS THIS A BORROWED COPY?

Avoid the hassle and order your own personal two-volume set of IC MASTER. It's the surest way to simplify your IC selection efforts.

Only IC MASTER allows you to examine and compare the specifications, relative strengths, and weaknesses of all devices in serious contention for your application. And only IC MASTER brings you actual manufacturers' data sheets, allowing you to make complete and definitive device selections.

You can order IC MASTER simply by charging it to your VISA or Master Card credit card. To place your order (USA only) call now: (408) 249-6800/(516) 227-1300. To order outside the USA, see list of authorized IC MASTER distributors on page 1471 of Vol. I.

THOMSON
COMPONENTS
MOSTEK

MICROCOMPUTER COMPONENTS

16-BIT MICROPROCESSOR
MK68000

Advances in semiconductor technology have provided the capability to place on a single silicon chip a microprocessor at least an order of magnitude higher in performance and circuit complexity than has been previously available. The MK68000 is the first of a family of such VLSI microprocessors from Mostek. It combines state-of-the-art technology and advanced circuit design techniques with computer sciences to achieve an architecturally advanced 16-bit microprocessor.

The resources available to the MK68000 user consist of the following:

- 17 32-Bit Data and Address Registers
- 16 Megabyte Direct Addressing Range
- 56 Powerful Instruction Types
- Operations on Five Main Data Types
- Memory Mapped I/O
- 14 Addressing Modes

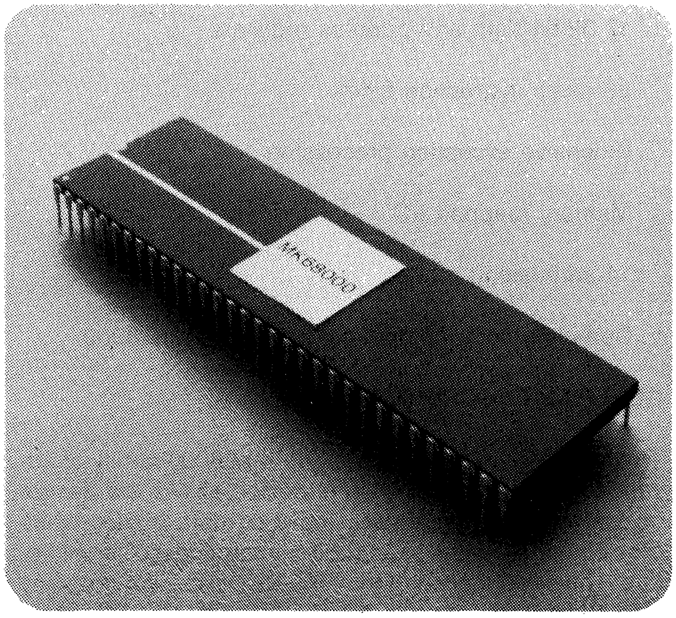

PROGRAMMING MODEL

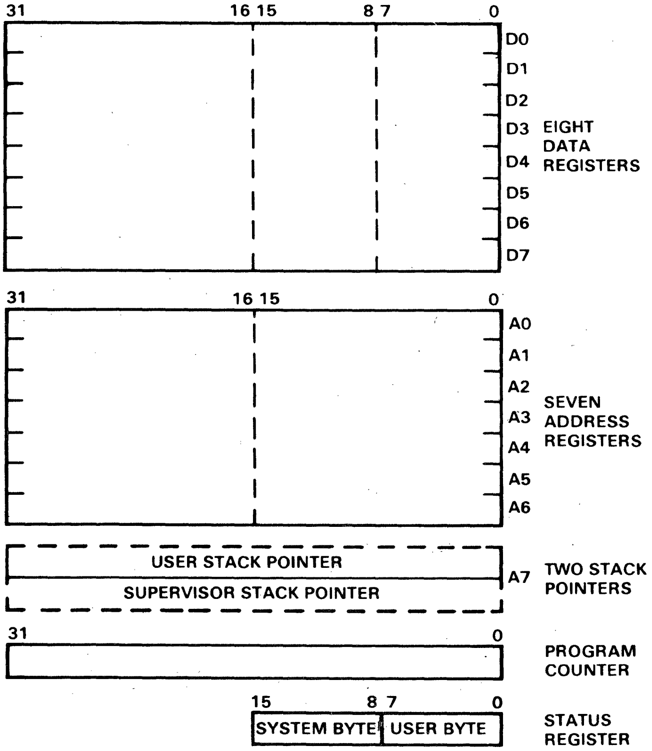
31
16 15
8 7
0
D0
D1
D2
D3
D4
D5
D6
D7
EIGHT DATA REGISTERS
31
16 15
0
A0
A1
A2
A3
A4
A5
A6
SEVEN ADDRESS REGISTERS
USER STACK POINTER
SUPERVISOR STACK POINTER
A7
TWO STACK POINTERS
31
0
PROGRAM COUNTER
15
8 7
0
SYSTEM BYTE
USER BYTE
STATUS REGISTER

PIN ASSIGNMENT

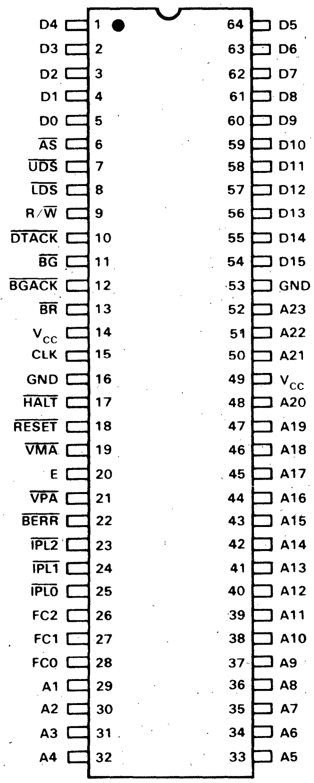
D4 1
D3 2
D2 3
D1 4
D0 5
$\overline{AS}$ 6
$\overline{UDS}$ 7
$\overline{LDS}$ 8
$R/\overline{W}$ 9
$\overline{DTACK}$ 10
$\overline{BG}$ 11
$\overline{BGACK}$ 12
$\overline{BR}$ 13
V_{CC} 14
CLK 15
GND 16
$\overline{HALT}$ 17
$\overline{RESET}$ 18
$\overline{VMA}$ 19
E 20
$\overline{VPA}$ 21
$\overline{BERR}$ 22
$\overline{IPL2}$ 23
$\overline{IPL1}$ 24
$\overline{IPL0}$ 25
FC2 26
FC1 27
FC0 28
A1 29
A2 30
A3 31
A4 32
64 D5
63 D6
62 D7
61 D8
60 D9
59 D10
58 D11
57 D12
56 D13
55 D14
54 D15
53 GND
52 A23
51 A22
50 A21
49 V_{CC}
48 A20
47 A19
46 A18
45 A17
44 A16
43 A15
42 A14
41 A13
40 A12
39 A11
38 A10
37 A9
36 A8
35 A7
34 A6
33 A5

**THOMSON
COMPONENTS
MOSTEK**

**MICROCOMPUTER
COMPONENTS**

PRELIMINARY

16-BIT MICROPROCESSOR WITH 8-BIT DATA BUS
MK68008

FEATURES

- ☐ 17 32-bit data and address registers
- ☐ 56 basic instruction types
- ☐ Extensive exception processing
- ☐ Memory mapped I/O
- ☐ 14 addressing modes
- ☐ Complete code compatibility with the MK68000

GENERAL DESCRIPTION

The MK68008 is a member of the MK68000 family of advanced microprocessors. This device allows the design of cost effective systems using 8-bit data buses, while providing the benfits of a 32-bit microprocessor architecture. The performance of the MK68008 is greater than any 8-bit microprocessor and superior to several 16-bit microprocessors.

A system implementation based on an 8-bit data bus reduces system cost, in compairson to 16-bit systems, due to a more effective use of components, byte-wide memories, and peripherals. In addition , the non-multiplexed address and data buses eliminate the need for external demultiplexers, thus further simplifying the system.

The MK68008 has full code compatibility (source and object) with the MK68000, which allows programs to be run on either MPU, depending on performance requirements and cost objectives.

The 1 megabyte, non-segmented linear address space of the MK68008 allows large modular programs to be developed and executed efficiently. A large linear address space allows program segment sizes to be determined by the application, rather than forcing the designer to adopt an arbitrary segment size without regard to his individual requirements.

The programmer's model, as shown in Figure 3, is identical to that of the MK68000, with 17 32-bit registers, a 32-bit program counter, and a 16-bit status register. The first eight registers (D0-D7) are used as data registers for byte (8-bit), word (16-bit), and long word (32-bit) operations.

MK68008
Figure 1

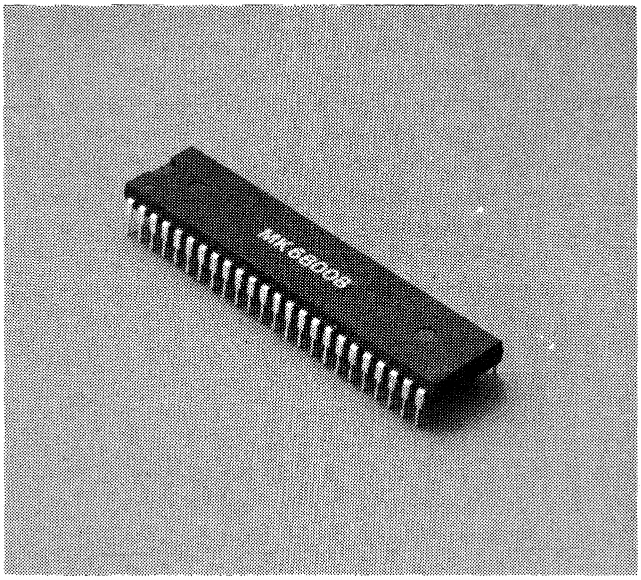

PIN ASSIGNMENT
Figure 2

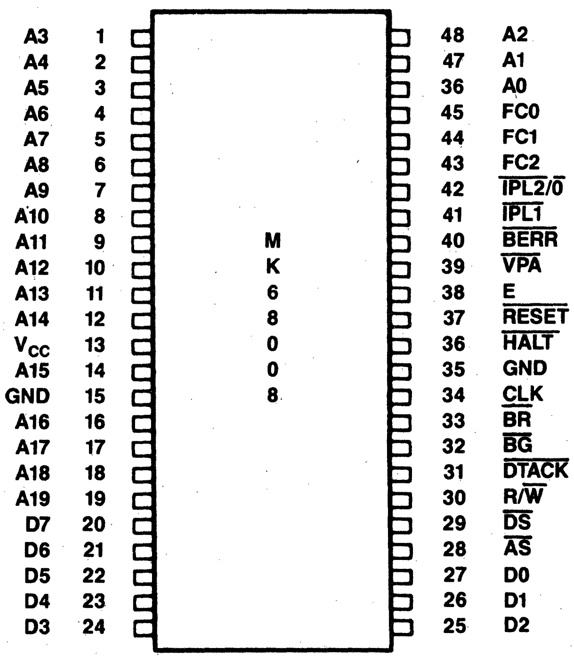
A3 1
A4 2
A5 3
A6 4
A7 5
A8 6
A9 7
A10 8
A11 9
A12 10
A13 11
A14 12
V$_{CC}$ 13
A15 14
GND 15
A16 16
A17 17
A18 18
A19 19
D7 20
D6 21
D5 22
D4 23
D3 24
48 A2
47 A1
36 A0
45 FC0
44 FC1
43 FC2
42 IPL2/0
41 IPL1
40 BERR
39 VPA
38 E
37 RESET
36 HALT
35 GND
34 CLK
33 BR
32 BG
31 DTACK
30 R/W
29 DS
28 AS
27 D0
26 D1
25 D2
M
K
6
8
0
0
8

FOR COMPLETE DATA SHEET, Call 800-443-0100, Ext. 518

THOMSON
COMPONENTS
MOSTEK

PRELIMINARY

PARALLEL INTERFACE/TIMER (PI/T)
MK68230

FEATURES

- ☐ 68000 Bus Compatible
- ☐ Port Modes Include:
  - Bit I/O
  - Unidirectional 8-bit and 16-bit
  - Bidirectional 8-bit and 16-bit
- ☐ Programmable Handshaking Options
- ☐ 24-bit Programmable Timer Modes
- ☐ Five Separate Interrupt Vectors
- ☐ Separate Port and Timer Interrupt Service Requests
- ☐ Registers are Read/Write and Directly Addressable
- ☐ Registers are Addressed for MOVEP (Move Peripheral) and DMAC Compatibility

GENERAL DESCRIPTION

The MK68230 Parallel Interface/Timer (PI/T) provides versatile double-buffered parallel interfaces and an operating system oriented timer to MK68000 systems. The parallel interfaces operate in unidirectional or bidirectional modes, either 8 or 16 bits wide. In the unidirectional modes, an associated data direction register determines whether the port pins are inputs or outputs. In the bidirectional modes, the data direction registers are ignored, and the direction is determined dynamically by the state of four handshake pins. These programmable handshake pins provide an interface flexible enough for connection to a wide variety of low, medium, or high speed peripherals or other computer systems. The PI/T ports allow use of vectored or autovectored interrupts, and also provide a DMA request pin for connection to the Direct Memory Access Controller or a similar circuit. The PI/T timer contains a 24-bit wide counter and a 5-bit prescaler. The timer may be clocked by the system clock (PI/T CLK pin) or by an external clock (TIN pin), with the option of using a 5-bit prescaler. It can generate periodic interrupts, a square wave, or a single interrupt after a programmed timer period. Also, it can be used for elapsed time measurement or as a device watchdog.

MK68230
Figure 1

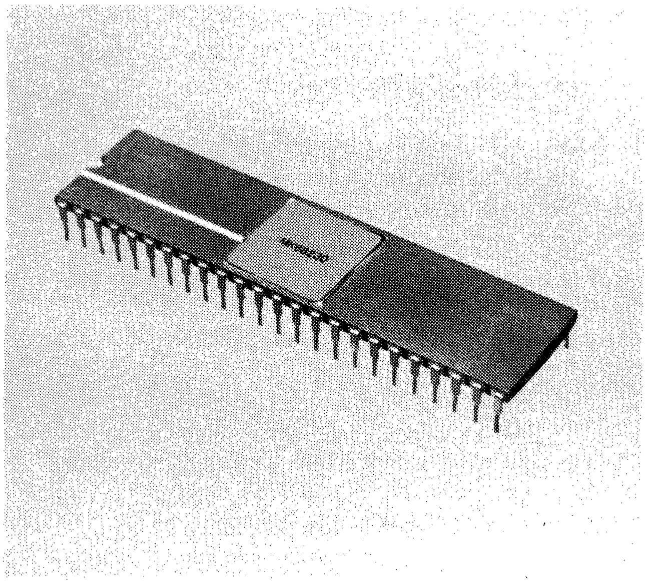

PIN ASSIGNMENT
Figure 2

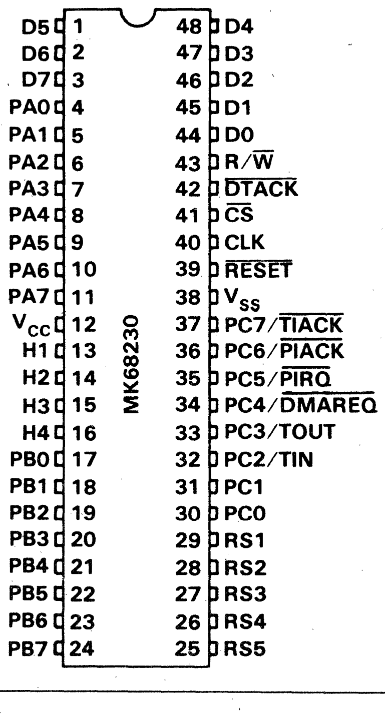
D5 1
D6 2
D7 3
PA0 4
PA1 5
PA2 6
PA3 7
PA4 8
PA5 9
PA6 10
PA7 11
V_{CC} 12
H1 13
H2 14
H3 15
H4 16
PB0 17
PB1 18
PB2 19
PB3 20
PB4 21
PB5 22
PB6 23
PB7 24
48 D4
47 D3
46 D2
45 D1
44 D0
43 R/$\overline{W}$
42 $\overline{DTACK}$
41 $\overline{CS}$
40 CLK
39 $\overline{RESET}$
38 V_{SS}
37 PC7/$\overline{TIACK}$
36 PC6/$\overline{PIACK}$
35 PC5/$\overline{PIRQ}$
34 PC4/$\overline{DMAREQ}$
33 PC3/TOUT
32 PC2/TIN
31 PC1
30 PC0
29 RS1
28 RS2
27 RS3
26 RS4
25 RS5
MK68230

**THOMSON
COMPONENTS
MOSTEK**

MICROCOMPUTER COMPONENTS

PRELIMINARY

68200 16-BIT SINGLE-CHIP MICROCOMPUTERS
MK68201/MK68E201/MK68211/MK68E211

FEATURES

☐ 16-bit, high performance, single-chip microcomputer

☐ 14 address and data registers
Eight 16-bit or sixteen 8-bit data registers
Six 16-bit address registers

☐ Advanced 16-bit instruction set
Bit, byte, and word operands
Nine addressing modes
Byte and word BCD arithmetic

☐ High performance (6 MHz instruction clock)
500 ns register-to-register move or add
3.5 μs 16 x 16 multiply
4.0 μs 32/16 divide

☐ Available with 0 or 4K (2K x 16) bytes of ROM

☐ 256 byte RAM (128 x 16)

☐ Three 16-bit timers
Interval modes
Event modes
One-shot modes
Pulse and period measurement modes
Two input and two output pins

☐ Serial channel
Double-buffered receive and transmit
Asynchronous to 375 Kbps
Synchronous to 1.5 Mbps
Address wake-up recognition and generation
Internal/external baud rate generation

☐ Parallel I/O
Up to 40 pins
Direction programmable by bit
One 16-bit or two 8-bit port(s) with handshaking

☐ Interrupt controller
16 independent vectors
Eight external interrupt sources
One non-maskable interrupt
Individual interrupt masking

MK68200
Figure 1

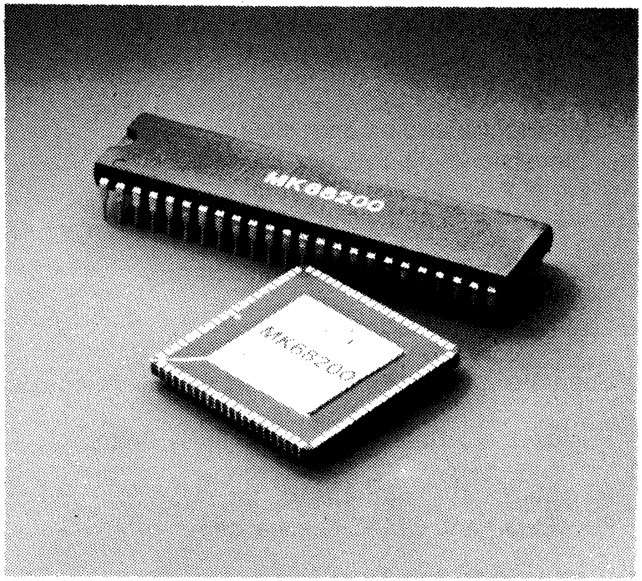

☐ Optional external bus
16-bit, multiplexed address/data bus
Automatic bus request/grant arbitration
Two control bus versions:
68000-compatible bus (UPC)
General Purpose Bus (GP)

☐ 8 and 12 MHz time base versions produce 4 and 6 MHz instruction clock rates, respectively.
Crystal or external TTL clock

☐ Single +5 volt power supply

☐ 48-pin DIP or 84-pin LCC

GENERAL DESCRIPTION

MK68200 designates a series of new, high-performance, 16-bit, single-chip microcomputers from Mostek. Implemented in Scaled Poly-5 NMOS, they incorporate an architecture designed for superior performance in computation-intensive control applications. A modern, comprehensive instruction set, which features both high speed execution and code space efficiency, is combined on-chip along with extensive, flexible I/O capabilities. On-chip RAM and optional on-chip ROM are provided within a full 64K byte addressing space.

**THOMSON
COMPONENTS
MOSTEK**

ADVANCE INFORMATION

MEMORY MANAGEMENT UNIT
MK68451

FEATURES

☐ Compatible with MK68000 and MK68008

☐ Provides virtual memory support for the MK68010

☐ Provides efficient memory allocation

☐ Seperates address spaces of system and user resources

☐ Provides write protection

☐ Supports paging and segmentation

☐ 32 segments of variable size with each MMU

☐ Multiple MMU capability to expand to any number of segments

☐ Allows inter-task communication through shared segments

☐ Quick context switching to cut operating system overhead

☐ Simplifies programming model of address space

☐ Increases system reliability

☐ DMA-compatible

GENERAL DESCRIPTION

The MK68451 memory management unit (MMU) provides address translation and protection for the 16 megabyte addressing range of the MK68000 MPU. Each bus master (or processor) in the MK68000 family provides a function code and an address during each bus cycle. The function code specifies an address space, and the address specifies a location within that address space. The function codes distinguish between user and supervisor spaces and, within these, between data and program spaces. This separation of address spaces provides the basis for memory management and protection by the operating system. Provision is also made for other bus masters to have separate address spaces for logical DMA.

MK68451
Figure 1

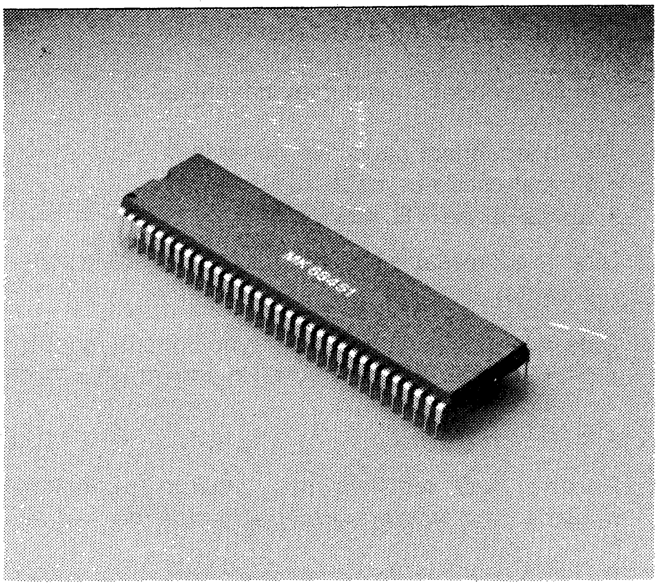

A multitasking operating system is simplified, and reliability is enhanced, through the use of the MMU.

The MK68451 memory management unit (MMU) is the basic element of a memory management mechanism (MMM) in an MK68000 family system. The operating system is responsible for insuring the proper execution of user tasks in the system environment, and memory management is basic to this responsibility. The MMM provides the operating system with the capability to allocate, control, and protect the system memory. A block diagram of a single-MMU system is shown in Figure 3.

An MMM, implemented with one or more MK68451 MMUs, can provide address translation, separation, and write protection for the system memory. The MMM can be programmed to cause an interrupt when a chosen section of memory is accessed, and can directly translate a logical address into a physical address, making it available to the MPU for use by the operating system. Using these features, the MMM can provide separation and security for user programs and allow the operating system to manage the memory in an efficient fashion for multitasking.

THOMSON COMPONENTS MOSTEK

MICROCOMPUTER COMPONENTS

PRELIMINARY

SERIAL INPUT/OUTPUT CONTROLLER MK68564

FEATURES

- ☐ Compatible with MK68000 CPU
- ☐ Compatible with MK68000 Series DMA's
- ☐ Two independent, full-duplex channels
- ☐ Two independent baud rate generators
  - Crystal oscillator input
  - Single-phase TTL clock input
- ☐ Directly addressable registers (all control registers are read/write)
- ☐ Data rate in synchronous or asynchronous modes
  - 0-1 M bits/second with 5.0 MHz system clock rate
- ☐ Self-test capability
- ☐ Receive data registers are quadruply buffered; transmit data registers are doubly buffered
- ☐ Daisy-chain priority interrupt logic provides automatic interrupt vectoring without external logic
- ☐ Modem status can be monitored
  - Separate modem controls for each channel
- ☐ Asynchronous features
  - 5, 6, 7, or 8 bits/character
  - 1, 1½, or 2 stop bits
  - Even, odd, or no parity
  - x1, x16, x32, and x64 clock modes
  - Break generation and detection
  - Parity, overrun, and framing error detection
- ☐ Byte synchronous features
  - Internal or external character synchronization
  - One or two sync characters in separate registers
  - Automatic sync character insertion
  - CRC-16 or CRC-CCITT block check generation and checking
- ☐ Bit synchronous features
  - Abort sequence generation and detection
  - Automatic zero insertion and deletion
  - Automatic flag insertion between messages
  - Address field recognition
  - I-field residue handling
  - Valid receive messages protected from overrun
  - CRC-CCITT block check generation and checking

MK68564
Figure 1

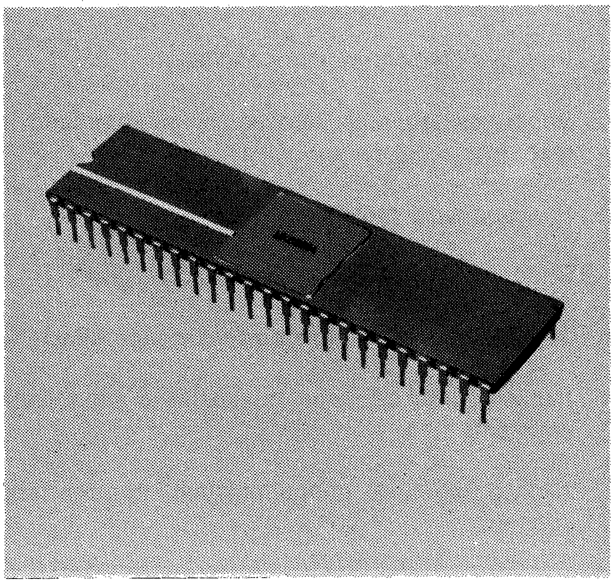

PIN DESCRIPTION

Figure 2

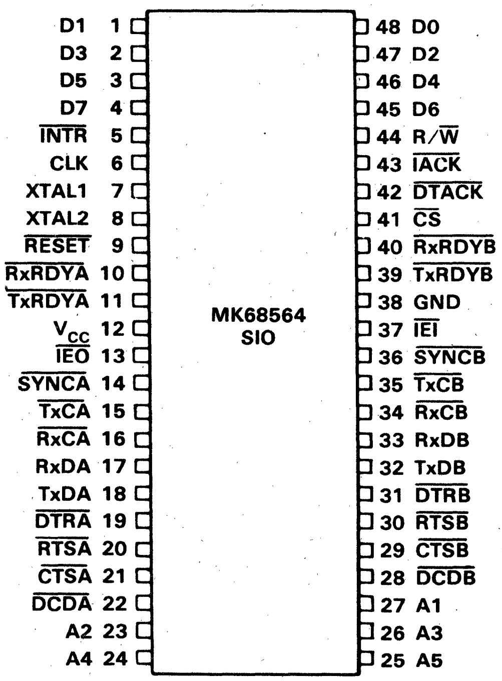
D1 1
D3 2
D5 3
D7 4
$\overline{\text{INTR}}$ 5
CLK 6
XTAL1 7
XTAL2 8
$\overline{\text{RESET}}$ 9
$\overline{\text{RxRDYA}}$ 10
$\overline{\text{TxRDYA}}$ 11
V_{CC} 12
$\overline{\text{IEO}}$ 13
$\overline{\text{SYNCA}}$ 14
$\overline{\text{TxCA}}$ 15
$\overline{\text{RxCA}}$ 16
RxDA 17
TxDA 18
$\overline{\text{DTRA}}$ 19
$\overline{\text{RTSA}}$ 20
$\overline{\text{CTSA}}$ 21
$\overline{\text{DCDA}}$ 22
A2 23
A4 24
MK68564
SIO
48 D0
47 D2
46 D4
45 D6
44 R/$\overline{\text{W}}$
43 $\overline{\text{IACK}}$
42 $\overline{\text{DTACK}}$
41 $\overline{\text{CS}}$
40 $\overline{\text{RxRDYB}}$
39 $\overline{\text{TxRDYB}}$
38 GND
37 $\overline{\text{IEI}}$
36 $\overline{\text{SYNCB}}$
35 $\overline{\text{TxCB}}$
34 $\overline{\text{RxCB}}$
33 RxDB
32 TxDB
31 $\overline{\text{DTRB}}$
30 $\overline{\text{RTSB}}$
29 $\overline{\text{CTSB}}$
28 $\overline{\text{DCDB}}$
27 A1
26 A3
25 A5

**THOMSON
COMPONENTS
MOSTEK**

MICROCOMPUTER COMPONENTS

PRELIMINARY

MK68901
MULTI-FUNCTION PERIPHERAL

FEATURES

- ☐ 8 Input/Output Pins
  - Individually programmable direction
  - Individual interrupt source capability
    - Programmable edge selection
- ☐ 16 Source interrupt controller
  - 8 Internal sources
  - 8 External sources
  - Individual source enable
  - Individual source masking
  - Programmable interrupt service modes
    - Polling
    - Vector generation
      - Optional In-service status
  - Daisy chaining capability
- ☐ Four timers with individually programmable prescaling
  - Two multimode timers
    - Delay mode
    - Pulse width measurement mode
    - Event counter mode
  - Two delay mode timers
  - Independent clock input
  - Time out output option
- ☐ Single channel USART
  - Full Duplex
  - Asynchronous to 62.5 kbps
  - Byte synchronous to 1 Mbps
  - Internal/external baud rate generation
  - DMA handshake signals

MK68901
Figure 1

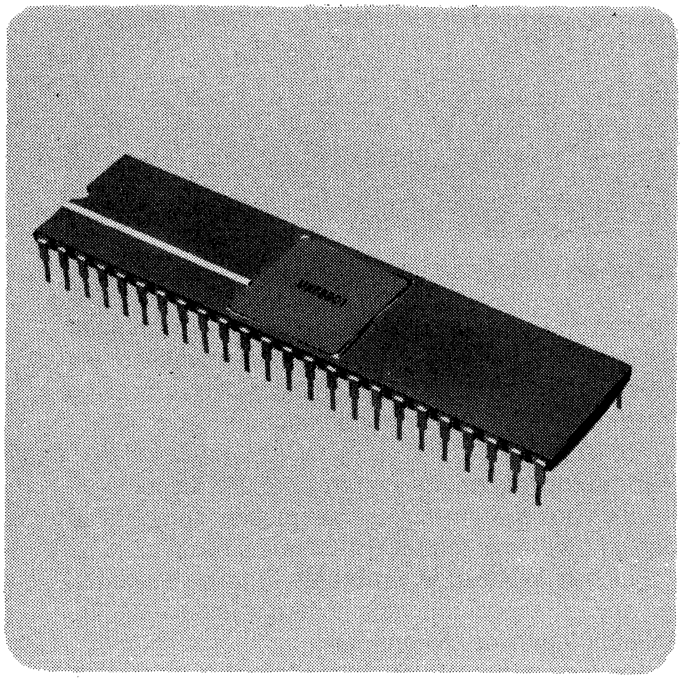

DEVICE PINOUT
Figure 2

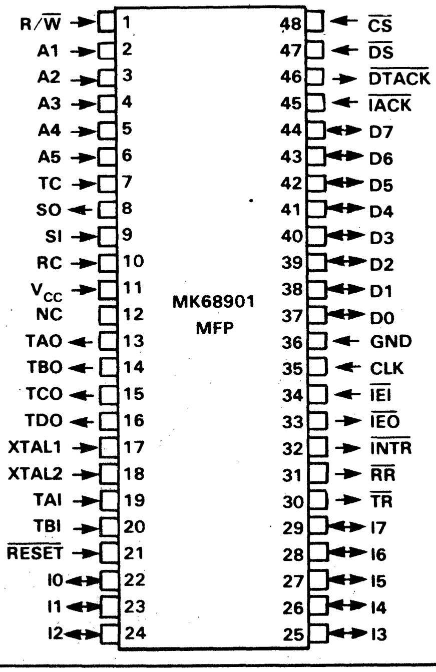
R/$\overline{W}$ 1
A1 2
A2 3
A3 4
A4 5
A5 6
TC 7
SO 8
SI 9
RC 10
V_{CC} 11
NC 12
TAO 13
TBO 14
TCO 15
TDO 16
XTAL1 17
XTAL2 18
TAI 19
TBI 20
$\overline{RESET}$ 21
I0 22
I1 23
I2 24
MK68901
MFP
48 $\overline{CS}$
47 $\overline{DS}$
46 $\overline{DTACK}$
45 $\overline{IACK}$
44 D7
43 D6
42 D5
41 D4
40 D3
39 D2
38 D1
37 D0
36 GND
35 CLK
34 $\overline{IEI}$
33 $\overline{IEO}$
32 $\overline{INTR}$
31 $\overline{RR}$
30 $\overline{TR}$
29 I7
28 I6
27 I5
26 I4
25 I3

MOTOROLA

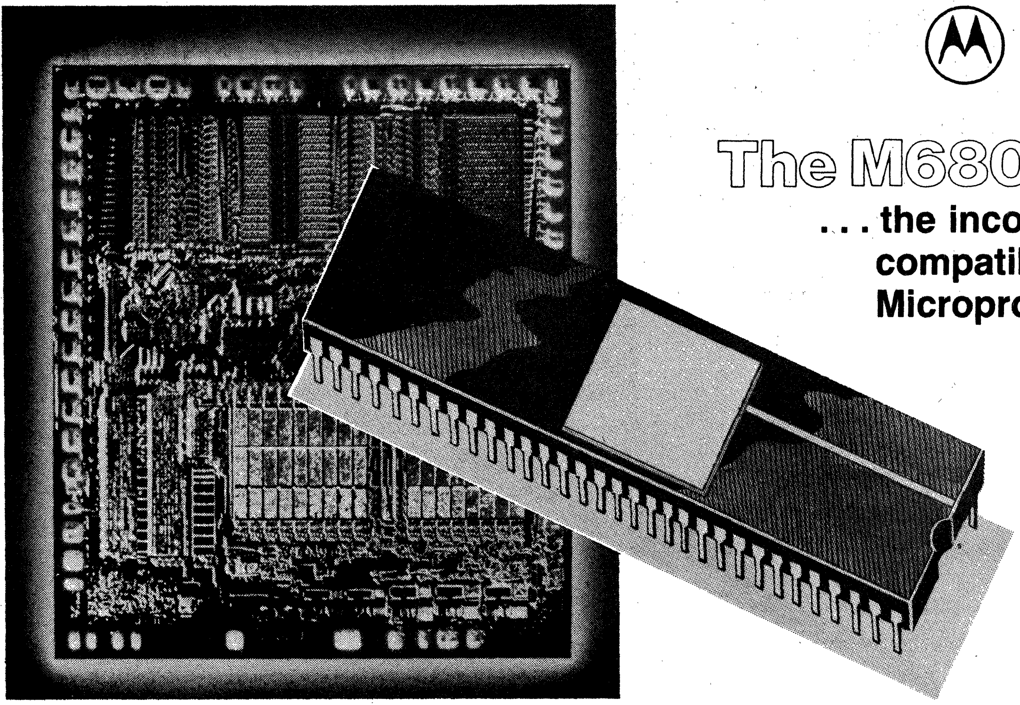

The M68000 Family

. . . the incomparable upward compatible 8/16/32-Bit Microprocessor Family

To designers of the most advanced microcomputer systems, the 16-bit MC68000 (the first member of the M68000 family) needs no introduction. It has received international recognition for its superior capabilities.

For example:

In multiprocessing systems, where resource allocation and system lock-up can present complicated design problems, the MC68000 is the solution;

For bus arbitration problems in large systems, its asynchronous interface to the system lets the MC68000 provide the answer;

For reducing high-level development efforts, its powerful instruction set allows automatic execution of oft-repeated program sequences;

In real-time applications, vectored interrupts, seven priority levels, and a 16-megabyte addressing range give the MC68000 far more flexibility than competitive chips.

Already many of the world's most respected manufacturers have joined Motorola in sourcing M68000 chips and related M68000-based board-and box-level products. A number of these are lending their design facilities to expanding the development rate of VLSI peripheral chips to support the M68000 family, thereby speeding up the progress toward mainframe performance in a desktop package.

To complement the Family's most stringent capabilities, Motorola developed VERSAdos — a realtime, multi-user, multi-tasking operating system that fully exploits the unique performance features of the hardware design. But it was soon apparent to the industry that its 32-bit architecture, its large linear address space and its regular orthogonal instruction set made the M68000 MPUs ideal for UNIX — an AT&T-developed Operating System that spawned a warehouse full of target programs for the VAX minicomputer and other powerful machines. Thus, it's not surprising that Motorola is the first MPU manufacturer, under license to AT&T, to market System V/68 — a system that brings the world of UNIX-associated target programs into the M68000 fold.

And what was done for UNIX was more recently extended to CP/M and Concurrent DOS, making these two popular operating systems compatible with the '68000 Family. Thus, existing programs for all these major operating systems are transportable, interchangeably, to '68000-based systems, and 3rd-party software vendors have the freedom to tailor their future offerings for the '68000 in the software format most suitable for their unique applications.

And complementing all the above attributes is a common instruction set for a chip family encompassing 8-bit, 16-bit and 32-bit capability . . . the most powerful system design flexibility for complex systems . . . easy transition from the simplest application to the most advanced.

These are just a few of the many unique features that give the M68000 Family state-of-the-art performance now, and assurance against obsolescence in the future.

MOTOROLA

The Microprocessors

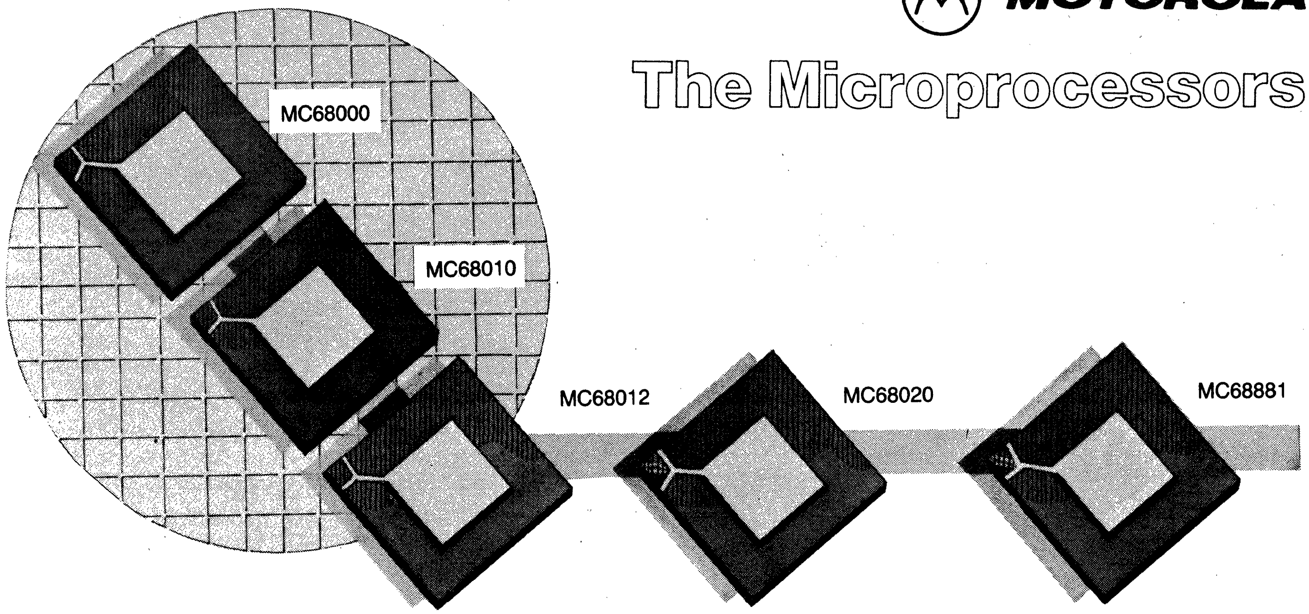

The Compatible Processors

The MC68000 — The first of the Motorola VLSI family of microprocessors, the 16-bit MC68000 combines state-of-the-art technology, advanced circuit design and computer science to achieve the following user-significant features:

- 32-bit-Data and Address Registers
- 16 Megabyte Direct Addressing Range
- 56 Powerful Instruction Types
- Operations on Five Main Data Types
- Memory Mapped I/O
- 14 Addressing Modes

The MC68010 — An M68000 Family member with enhancements that make it ideal for virtual memory and virtual machine systems.

Its most significant enhancement is the facility for complete, controlled storing of the internal processor state upon receipt of a bus error signal during a faulty bus cycle.

Additionally, the MC68010 may be used as a virtual processor with one governing operating system handling the supervisory chores of any number of subordinate operating systems.

The MC68012 — Maintains all the features, functions, and upward compatability of the MC68008, MC68000 and MC68010 and adds seven more address lines allowing for a 2-gigabyte linear address range.

The MC68020 — The first complete 32-bit microprocessor whose processing power rivals that of today's more advanced minicomputers and even those of many mainframe machines, while maintaining software compatibility to all preceding M68000 MPUs. The MC68020 features instruction-set enhancements, co-processor operation, improved operating system support and innovative techniques to improve bus efficiency. HCMOS manufacturing techniques allow the MC68020 to provide all these features and power while dissipating less than 1.5 watts in a system.

The MC68008 For 8-Bit Applications — Allows the design of cost-effective systems using 8-bit data buses while providing the benefits of 32-bit internal architecture. Performance rivaling that of many 16-bit machines is made possible by (up to) 10 MHz processing speed and other attributes associated with the MC68000 processor. System cost, however, is significantly reduced through the use of byte-wide memories and peripherals as well as the lower cost of the less demanding architecture of the 8-bit output requirements.

The MC68881 Floating Point Coprocessor — Provides full support for IEEE specified floating point high-level math functions and for all transcendental functions. All calculations are performed to 80 bits of precision and no software "envelope" is required. The FPCP can perform either as a coprocessor to the full 32-bit MC68020 microprocessor or as a tightly coupled peripheral to the MC68000 or MC68010.

M68000 Peripherals

MOTOROLA

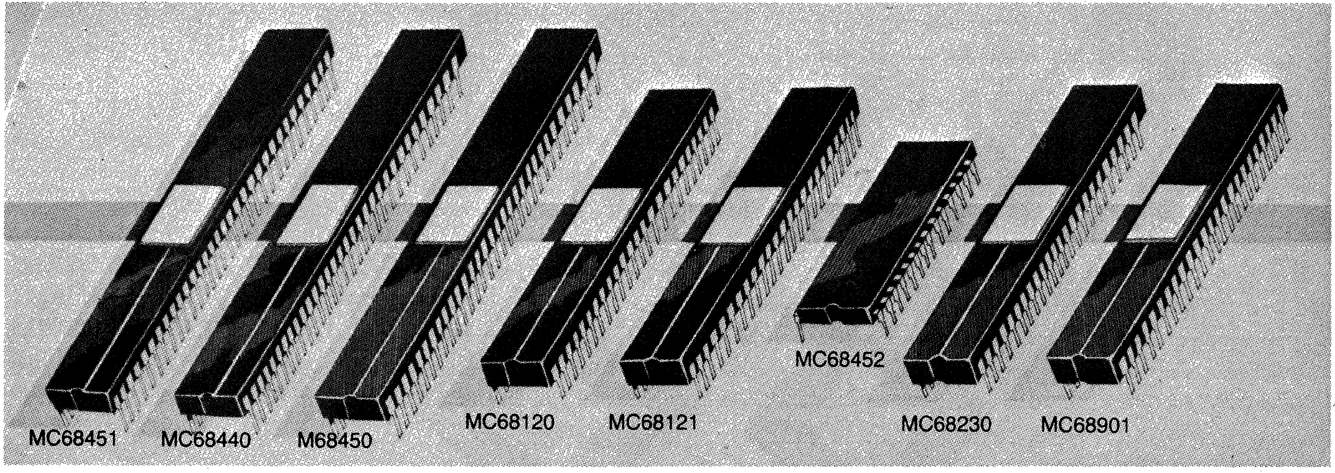

Memory Control Peripherals

Memory Management Unit — The basic element of memory management mechanism in an M68000 system. The MMU provides address translation and protection for the entire 16-megabyte addressing range of the MC68000. Virtual memory support is also provided for the MC68010 MPU. It provides 32 segments of variable memory size and allows for multiple MMU capabilities to expand to any number of segments. **MC68451**

Dual Direct Memory Access (DDMA) — Complements the performance capabilities of M68000 microprocessors by moving blocks of data in a quick, efficient manner with a minimum of intervention from an MPU. The DDMA performs memory-to-memory, peripheral-to-memory, and memory-to-peripheral transfers through each of two completely independent DMA channels. Either 8- or 16-bit transfers are supported. The DDMA also offers two interrupt vectors per channel. **MC68440**

Direct Memory Access Controller (DMAC) — Maintains high-performance data movement for even more complex M68000 MPU based systems. While pin-compatible with the MC68440 DDMA, the DMAC offers four completely independent DMA channels. In addition to all the features of the MC68440, the DMAC also provides very sophisticated manipulation of data through block-, array-, and linked array-chained addressing capabilities. **M68450**

I/O Peripheral Controllers

Intelligent Peripheral Controller (IPC) — A general-purpose intelligent controller that provides the interface between an M68000 or M6800 Family microprocessor and the final peripheral devices. The intelligence of this device comes from its MC6801 MPU core. System bus data is transferred via 128 bytes of on-board dual-port RAM. Multiple operating modes range from single-chip control (with 21 I/O lines and 2 control lines) to expanded mode (with 64K address space). **MC68120**

Same as above, except without ROM. **MC68121**

Bus Arbitration Module (BAM) — Arbitrates the control of an M68000 system bus when multiple bus masters are involved. Each BAM handles eight masters. **MC68452**

Parallel Interface/Timer (PI/T) — Provides versatile double-buffered parallel interfaces and a system oriented timer. The parallel interfaces operate in either a unidirectional or bidirectional mode, 8- or 16-bits wide. The timer is 24-bits with full programmability and a 5-bit prescaler. **MC68230**

Multi-Function Peripheral (MFP) — Provides basic microcomputer function requirements as a single companion chip to the M68000 Family. Features include a full function single channel universal serial asynchronous receiver/transmitter (USART) for data communications, eight source interrupt controller, eight parallel I/O lines, and four timers. **MC68901**

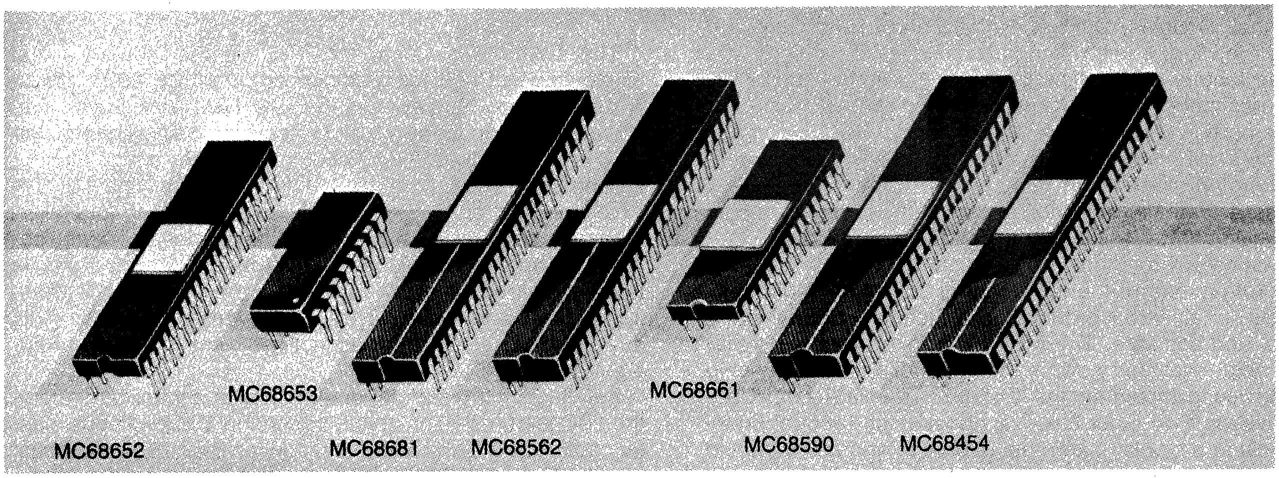

Data Communications

Multi-Protocol Communications Controller (MPCC) — A single-channel, serial-data communications device that recognizes byte control and bit-oriented protocols. Handles data transfers of 8- or 16-bit widths at a maximum 2.5 Mbit/sec rate. **MC68652**

Polynomial Generator Checker (PGC) — An error correction code generation and comparator circuit that complements a receiver/transmitter set in the support of character-oriented data link controls. Data transmission format may be serial (asynchronous or synchronous) or parallel. **MC68653**

Dual Universal Asynchronous Receiver/Transmitter (DUART) — Features two independent full duplex asynchronous receiver/transmitter channels. Receiver data registers are quadruple buffered and transmitter data registers are double buffered for minimum MPU intervention. Multifunction 6-bit input and 8-bit output ports, a 16-bit programmable counter/timer, interrupt capabilities, and a 1-megabyte transfer rate make the DUART an extremely powerful device for complex data communications. **MC68681**

Dual Universal Serial Communication Controller (DUSCC) — Offers two independent, multi-protocol, full duplex receiver/transmitter channels. All major data communication formats are supported, including asynchronous (5 to 8 bits plus parity), byte control, and bit-oriented protocols. Also included in the part are a 16-bit multi-function counter/timer, fully programmable bit rate generator, and a DMA interface. **MC68562**

Enhanced Peripheral Communications Interface (EPCI) — A universal synchronous/asynchronous data communications controller that interfaces to the M68000 MPU Family and most other 8- and 16-bit microprocessors. Its receiver and transmitter are double buffered for efficient full or half duplex operation. An internal baud rate clock eliminates the need for a system clock. The EPCI converts parallel data into transmit-serial data. Simultaneously, it can convert receive-serial data to parallel data characters for input to the MPU. **MC68661**

Local Area Network Controller

Local Area Network Controller for Ethernet (LANCE) — Provides complete IEEE specification (P802.3) for M68000 based systems. The LANCE can operate as a bus master or as a peripheral to the processor. A 16-megabyte DMA controller, on-board, guarantees the proper transfer of data to and from the processor. **MC68590**

Disk I/O

Intelligent Multiple Disk Controller (IMDC) — Directly interfaces to an M68000 system bus to control any combination of up to four floppy or hard disks. Both single and dual density formats are supported. A 256-byte FIFO smoothes the transfer of data to and from the disk and a 4-gigabyte on-board DMA controller guarantees proper data movement. **MC68454**

Motorola MAP Products

With up to 50% of the costs of implementing a computer integrated factory directly related to communications, it's little wonder that major manufacturers such as General Motors, McDonnell Douglas, DuPont, Kodak, and Inland Steel are driving the market for a standardized communications network for factory automation. Of the $40 billion in capital expenditures that GM has committed to modernize its factories, a large portion will be spent on promoting the rapid implementation of the Manufacturing Automation Protocol (MAP), the emerging standard in factory networking. MAP makes possible a dramatic reduction in the cost and time required to install, operate, and upgrade a factory-wide data communications environment.

Motorola is one of the few vendors that can supply MAP products in all three product areas: chips, VMEsystem™ boards, and software. The MC68824 Token Bus Controller (TBC) chip, available now, is the industry's first single-chip VLSI device to implement the IEEE 802.4 Media Access Control sublayer. Two other chips, scheduled for 1986 introduction, include a bipolar Carrierband Modem and a Broadband Interface Controller.

Motorola's VMEbus products include the MVME370 MAP Interface Controller and the MVME371 Broadband Modem. By mid-1986, Motorola will begin deliveries on the MVME372 Advanced MAP Interface Controller board, utilizing the MC68824 TBC chip and the MC68020 MPU, implementing all seven layers of the MAP protocol. And finally, in the software arena, implementation of the MAP 2.1 protocol will be available in both object and source code versions.

Motorola has been a major contributor to the MAP program since its inception. In fact, Motorola was one of the seven original participants at the MAP demonstration at the 1984 National Computer Conference where various vendors' equipment intercommunicated on a MAP network. The MAP bandwagon now carries such heavyweights as IBM, AT&T, Gould, DEC, Honeywell, and Hewlett-Packard. In addition, over 200 companies now participate in MAP User Group Meetings.

Whether you require IC's, VME boards, software, or any combination of these, Motorola can provide you the proper MAP solution.

MicroMAP

MicroMAP™ software, available in mid-1986, will represent a full implementation of the MAP 2.1 protocol. MicroMAP will come in both object and source code versions, and will be packaged with and without board-level products. To accommodate various hardware requirements, MicroMAP layers will be offered individually or in combinations, and can be downloaded into RAM or placed in ROM for higher performance, lower cost, and smaller packaging volume.

As the common thread for linking the various combinations of hardware and transmission techniques, MicroMAP provides users with the Data Link, Network, Transport, and Session Layers. In addition, MicroMAP features Common Application Service Elements; Manufacturing Message Format Standard; File Transfer, Access, and Management; and Directory Services in the Application Layer. Each layer is comprised of a set of routines that run under VRTX™, the popular real-time kernel. And finally, in the Motorola implementation of MAP software, all the sublayer standard interface routines are written in 'C,' making MicroMAP portable across virtually any hardware environment.

MC68824 Token Bus Controller (TBC)

The Token Bus Controller (TBC) is the industry's first single-chip VLSI device to implement the IEEE 802.4 Media Access Control sublayer of the ISO Data Link Layer. Designed for use in today's factory networking applications, the TBC is an intelligent HCMOS communications controller supporting serial data rates of 1, 5, and 10 Mbps. The TBC relieves the host processsor of the frame formatting and token management functions. Because the primary communications between the host and the Token Bus Controller is through shared memory structures, the interface between framed data and higher levels of software is simplified. This arrangement also provides for efficient memory management.

For efficient transfers of data frames to and from memory, the TBC features an on-chip four-channel DMA with bus master capability, a 32-bit address range, an 8- or 16-bit data bus, and a 40-byte FIFO. The TBC can also implement token bus network gateways to other local area networks by using the IBM-defined source routing option. And to simplify network maintenance, sophisticated diagnostics test functionality of both the TBC and Modem, while monitoring services support network statistics gathering.

MC68184 Broadband Interface Controller (BIC)

For implementation of most of the digital requirements for an IEEE 802.4 Broadband Physical Layer, Motorola will provide the MC68184 Broadband Interface Controller (BIC) in early 1986. The BIC is a high-speed (10 Mbps) Macrocell Array that manipulates both data and control for the RF transmitter/receiver circuitry. This device implements the standard MAC/Physical serial interface and is designed to connect to the TBC either directly, or through an arbitrary length cable. Other features include scrambling/descrambling of data, kicker insertion/deletion, error detection and correction, fifteen lines for receiver/transmitter control, and both internal and external loopback modes.

MC68194 Carrierband Modem (CBM)

To implement the IEEE 802.4 Phase Coherent Physical Layer, Motorola is developing the MC68194 Carrierband Modem (CBM) for introduction in mid-1986. The CBM is an advanced bipolar LSI device that interfaces with the Token Bus Controller to provide a cost-effective node for single-channel carrierband networks. The CBM performs two vital functions: 1) it modulates the information from the serial interface and transmits this signal onto the network cable; and 2) it receives signals from the network, demodulates the information, and passes that information to the TBC via the serial interface.

The CBM features a crystal-controlled transmit clock, a phase-locked loop (for the recovery of clocked data), and an RC-controlled Jabber Inhibit timer. This device will also contain station management logic for providing control and sense lines to activate and report on station management functions such as Reset, Jabber Inhibit, and Loopback.

Motorola MAP Products — continued

VMEmodule™ MAP Network Interface

For early MAP implementations, Motorola offers a VMEbus-compatible board set that incorporates both a MAP Interface Controller and a Broadband Modem module. Complete software is included to implement layers one through four of the MAP 2.1 Specification. The two-board set allows a complete 10 Mbps MAP network interface to be enclosed compactly within any VME card cage.

MAP Interface Controller

Utilizing gate array technology, this initial product utilizes a ROM-based real-time kernel and implements the first four layers of the MAP 2.1 standard at a 10 Mbps data rate. The upper three layers (5–7) are handled by a companion CPU board. The MVME121, MVME131, and the MVME117 CPU Single Board Computers are ideally suited for this function. This product also includes object code software implementing MAP 2.1 layers 2 through 4, which are downloadable into the MAP Network Interface from the system host.

MAP Broadband Modem

Working in conjunction with the MAP Interface Controller is the MAP Broadband Modem board. This board provides all logic and RF circuitry needed to interface to the MAP 2.1 broadband media.

MAP Network Developer's Kit

For a quick start in network implementation, Motorola offers MAP network designers the MAP Network Developer's Kit containing all the elements necessary to construct a VME-compatible prototype MAP network. Besides the broadband coax cable, taps, and a head-end remodulator, the kit contains a choice of either two or four complete 10 Mbps MAP Network Interface VME board sets.

Advanced MAP Interface Controller

For the most advanced MAP 2.1 compatible Token Bus node performance, Motorola will offer the 10 Mbps MVME372 VMEbus-compatible Advanced MAP Interface Controller. This cost-effective board combines the functionality and performance of the MC68824 TBC chip and the MC68020 32-bit microprocesssor. The TBC implements portions of the OSI/MAP 2.1 Physical Interface (layer 1) and the full Media Access Control functions of the Data Link Layer (layer 2), while the MC68020 MPU handles the remaining LLC functions of the Data Link Layer, and the remaining Layers (3–7).

MicroMAP, SYSTEM V/68, VERSAdos, VMEmodule, and VME/10 are trademarks of Motorola, Inc.
Ethernet® is a registered trademark of Xerox Corp.
Unix is a trademark of AT&T Bell Laboratories.
VRTX® is a registered trademark of Hunter & Ready, Inc.

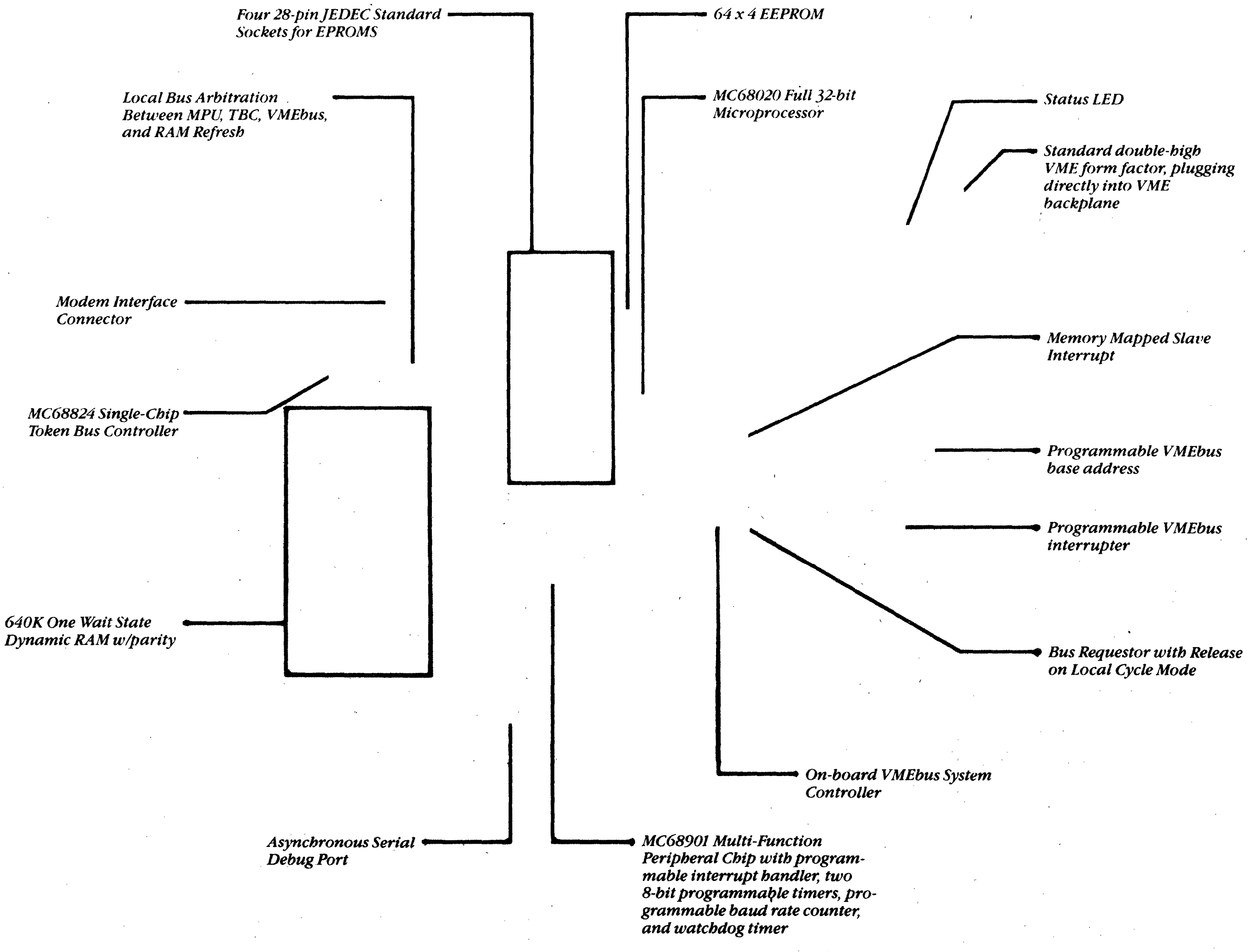
Four 28-pin JEDEC Standard Sockets for EPROMS
64 x 4 EEPROM
Local Bus Arbitration Between MPU, TBC, VMEbus, and RAM Refresh
MC68020 Full 32-bit Microprocessor
Status LED
Standard double-high VME form factor, plugging directly into VME backplane
Modem Interface Connector
Memory Mapped Slave Interrupt
MC68824 Single-Chip Token Bus Controller
Programmable VMEbus base address
Programmable VMEbus interrupter
640K One Wait State Dynamic RAM w/parity
Bus Requestor with Release on Local Cycle Mode
On-board VMEbus System Controller
Asynchronous Serial Debug Port
MC68901 Multi-Function Peripheral Chip with programmable interrupt handler, two 8-bit programmable timers, programmable baud rate counter, and watchdog timer

Advanced MAP Network Interface Controller

The M6800 Family

. . . the unrivaled 8-Bit Family of MPU/MCU Products

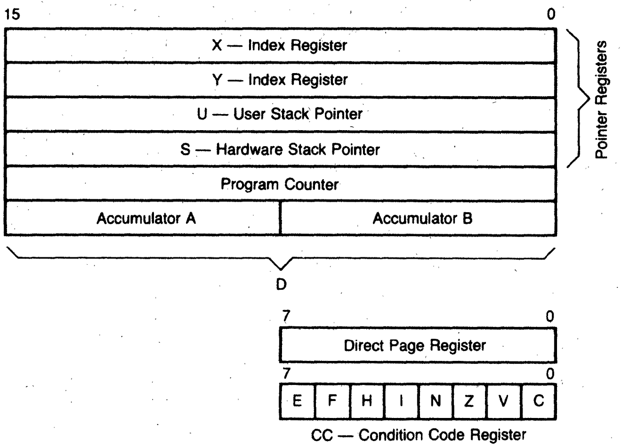

The M6809 Family
Programming Family

Family Variations:

MC6809 — Processor with on-chip clock

MC6809E — Has external clock inputs for multiprocessor operation

Both units are available with operating frequencies of 1 –, 1.5 –, and 2 MHz, and at operating temperatures of 0 to 70°C and –40 to 85°C.

Today, there is controversy about where a microcomputer turns into a "mini." While a number of benchmarks have been suggested, it is generally conceded that 16-bit processing capability constitutes a minimum "mini" requirement. From this standpoint alone, the M6809 Family at least borders on minicomputer capabilities.

The MC6809 is the latest member of the Motorola M6800 Family and is the most powerful 8-bit MPU in existence today. By permitting 16-bit internal bit manipulation, it has 50 percent more throughput than the basic MC6800. But in addition, it adds new addressing modes, utilizes an expanded instruction set with high-level language capability, and features a host of other refinements that add functional expansion to, while maintaining compatibility with, the M6800 Family. The MC6809 supports modern programming techniques such as position independence, reentrancy and modular programming.

The "E" Version has external clock inputs to allow synchronization with other MPUs and peripherals for multiprocessor operation.

General Features

- Hardware — Interfaces with All M6800 Peripherals
- Software — Upward Source Code Compatible Instruction Set and Addressing Modes

ARCHITECTURAL FEATURES

- Two 16-Bit Index Registers
- Two 16-bit Indexable Stack Pointers
- Two 8-Bit Accumulators can be Concatenated to Form One 16-Bit Accumulator
- Direct Page Register Allows Direct Addressing Throughout Memory

SOFTWARE FEATURES

- Ten 6800 Upward Compatible Addressing Modes
- Direct Addressing Anywhere in Memory
- Long Relative Branches
- Program Counter Relative
- True Indirect Addressing
- Expanded Indexed Addressing
    - 0-, 5-, 8-, or 16-Bit Constant Offsets
    - 8- or 16-Bit Accumulator Offsets
    - Auto Increment/Decrement by 1 or 2
- Improved Stack Manipulation
- 1464 Instructions
- 8 x 8 Unsigned Multiply
- 16-Bit Arithmetic
- Transfer/Exchange All Registers
- Push/Pull Any Registers

The above MPUs were the first of the M6800 MPU family and were maintained in inventory for replacement purposes. For new designs, the more powerful M6809 family is recommended.

Family Variations:

MC6800 — Basic Processor; needs external clock

MC6808 — Adds on-chip clock

MC6802NS — Adds on-chip clock and 128 x 8 bit RAM

MC6802 — Adds on-chip clock and 128 x 8 bit RAM. Has 32-byte RAM retainability through "V_{CC} Standby" function

8-Bit MPU Peripheral Chips

BIT PLANE 320 x 200 16 COLORS
PRODUCTIVITY APPLICATIONS
COMPLEX ANIMATION
TEXT UP TO 80 CHARACTERS x 50 LINES

Today's technology permits the generation of CRT-displayed graphics with all the fidelity of a first-quality color motion picture. In the past, however, this required several PC boards, densely packed with SSI/MSI circuits, making it cost-effective only for high-end, minicomputer driven equipment. Now, utilizing VLSI bipolar and MOS technologies, Motorola has introduced a 2-chip ***Raster Memory System*** *that makes high-quality graphics affordable for low- and medium-priced personal computers and workstations utilizing microprocessors with both 8-bit and 16-bit capabilities.*

In addition, Motorola still supplies a wide range of graphics/display peripherals with which to customize display systems for specific applications.

Graphics Display Peripherals

Raster Memory System — Two-chip video display generator system which, under MPU control, converts a graphics program stored in memory to the complex video stream that produces high-quality information on the CRT. This two-chip VLSI chip set, supplemented by a microprocessor, memory to store the program data, and a small number (as little as three packages) of additional SSI/MSI interface chips, form a complete system. The interface chips act as "glue" for variations in overall hardware architecture.

Display quality is controlled by the processing power of the MPU, the amount of available memory, the quality of the software and, of course, the capabilities of the video display generator. The RMS chip set operates compatibly with three of Motorola's most advanced MPUs: the MC68000, 16/32-bit processor; the MC68008 which has all the processing power of the MC68000 but is designed with 8-bit data lines; the MC6809 with its 16-bit (rather than 32-bit) internal architecture and 8-bit data bus. This compatible MPU complement allows price/performance tradeoffs consistent with end-use requirements.

The Raster Memory System supports memory capacity ranging from 16K to 1 Mbytes, offering a wide range of systems performance.

Overall, graphics quality is determined primarily by the power of the MPU and the amount of memory used — not by any limitation within the RMS System itself.

Raster Memory Control Chip — MC68487
Raster Memory Interface Chip — MC68486

CRT Controller — Provides the complex interface between a terminal and a microprocessor of the M6800 Family. It is designed to simplify the development of equipment such as intelligent terminals, word processing and information display devices. It consists of the horizontal and vertical counting circuits, a display address generator, a cursor register and comparator, and a light-pen register.

Over 16K of memory may be randomly addressed for display. The CRT may be scrolled or paged through the entire display memory. **MC6845**

Video Display Generator — Provides a means of interfacing the M6800 microprocessor family (or similar product) to a standard color or black and white NTSC television receiver.

The VDG reads data from memory and produces a video signal which allows the generation of character graphic displays. The generated video signal may be modulated to either channel 3 or 4 of a standard TV receiver by using the compatible MC1372 (below).

For Non-Interlace Systems — MC6847
For Interlace Systems — MC6847Y

Color TV Video Modulator — Companion part to the MC6847 Display Generator, provides and accepts the correct dc interconnection levels. This device may also be used as a general-purpose modulator for video signal generating devices such as video games, test equipment, video tape recorders, etc. **MC1372**

Interactive Video Display Components

Advanced Video Display Controller — A programmable device designed for use in CRT terminals and display systems. The AVDC generates the timing signals necessary for the display of interlaced or non-interlaced data. A variety of operating modes, display formats, and timing profiles can be implemented by programming the control registers in the AVDC.

A minimum CRT terminal system configuration consists of an AVDC, an MC2671 controller, an MC2670 graphics generator, an MC2675 color/monochrome attributes controller, a microprocessor such as the MC6809, a display buffer RAM, and a small number of TTL, interface circuits. **MC2674**

Programmable Keyboard and Communications Controller — Provides a versatile keyboard encoder and an independent full-duplex asynchronous communications controller. It is intended for use in microprocessor-based systems with an 8-bit data bus interface. Operates with MC2674 Controller in applications such as terminals, word-processing systems, and small business computers. **MC2671**

Display Character and Graphics Generator — This mask-programmable 11,648-bit line-select character generator contains 128 10 x 9 characters placed in a 10 x 16 matrix, and permits shifting characters that normally extend below the baseline. Character shifting, previously requiring additional external circuitry, is now accomplished internally. **MC2670**

Color/Monochrome Attributes Controller — Bipolar LSI device controls visual attributes for both color and monochrome displays. Contains a programmable dot clock divider, a high speed shift register to serialize input dot data, logic to apply visual attributes to the resulting display. The monochrome mode provides reverse video, blank, and two general purpose user definable attributes. In this mode, the display characters can be specified to appear on either a light or dark screen background. The color mode provides eight colors for foreground (character) video and eight colors for background video. Both modes provide double-width, underline, blink, dot-stretching, and dot-width attributes. **MC2675**

Programmable Video Timing Controller — Generates the vertical and horizontal timing signals necessary for the display of interlaced or non-interlaced data on a CRT monitor. It provides consecutive addressing to a user specified display buffer memory domain and controls the CPU-display buffer interface for various buffer configuration modes. A variety of operating modes, display formats, and timing profiles can be implemented. **MC2672**

Video Attributes Controller — Provides for the reverse video, blank (non-display), blink, underline, and highlight attributes and a graphics mode attribute to work in conjunction with the MC2670 display character and graphics generator (DCGG). **MC2673**

M6800 Compatible Memory

128 x 8-Bit Static RAM — Available in plastic and ceramic packages to coincide with the speed and temperature specifications of the M6800 Family. **MCM6810**

Floating Point ROM — Preprogrammed ROM designed for M6809 processor family implements entire IEEE-proposed Binary Floating Point Arithmetic, Draft 8-0 standard. Available for 1.5 and 2.0 MHz operation, at 0 to 70°C, in plastic and ceramic packages. **MC6839**

16K-Byte ROM/EEPROM Combination — 14K bytes of mask-programmed ROM, together with 2K bytes of bulk erasable EEPROM, combine nonvolatile memory with user-programmable capability in these memory chips utilizing the latest HMOS technology. **MCM6836E16**

Same as above with added 256 byte EEPROM redundancy. **MCM6836R16**

ROM-I/O-Timer — This combination chip, when used with the MC6802 MPU, yields a basic 2-chip microcomputer system featuring 2K bytes of ROM, an 8-bit bidirectional data port, and a 16-bit programmable internal timer-counter. **MC6846**

Memory Expansion and Control

Memory Management Unit — Operates in conjunction with the MC6809 MPU to expand address memory space from 64K bytes to 2 Megabytes. Each MMU can handle four different concurrent tasks with task isolation and write protection. Up to eight MMUs can be used in a system. Available in plastic, Cerdip and ceramic package. **MC6829**

Dual Port RAM Unit — Permits two microprocessors operating on two separate buses to exchange data without interfering with normal bus operation. Contains 256 bytes of dual-port RAM which acts as the medium for data interchange. HCMOS technology reduces power dissipation. Available in plastic and ceramic package. **MCM68HC34**

Direct Memory Access Controller — Performs the function of transferring data directly between memory and peripheral device controllers, thus bypassing the MPU and its associated interactive time delay. Transfers data at up to 2 Mbytes per second rate. Available in P, S and L package. **MC6844**

I/O Peripherals

Parallel/Serial . . .

Intelligent Peripheral Controller — This highly sophisticated Peripheral Controller is, in fact, a complete microcomputer chip dedicated to the control of a variety of microcomputer peripherals. On-chip circuitry includes a microprocessor that is directly compatible with the MC6801 MCU and upward compatible with the MC6800 Source and Object Code. Other chip features include a 128-byte dual-ported RAM, 2K bytes of ROM and a 16-bit, 3-function timer. 21 parallel I/O lines plus an additional five lines that can be configured for serial communications provide a high degree of systems flexibility. Multiple operating modes allow the Controller to operate on its local bus, or to communicate with an external systems bus through the internal dual-ported RAM. **MC68120**

Same as above, but without on-chip ROM. Available in ceramic 48-pin package. **MC68121**

Real Time Clock — Consists of a complete time-of-day clock with alarm, a 100 year calendar, a periodic interrupt and square wave generator, and 50 bytes of low-power static RAM. The MC146818 RTC utilizes CMOS technology which allows it to interface with processor buses while consuming very little power. This makes an ideal device for use in a battery backup environment. **MC146818**

Parallel . . .

Peripheral Interface Adapter — Contains two I/O ports, each capable of controlling an independent 8-bit peripheral data bus. Multiple PIAs can be used with a single system and selectively addressed by means of Chip-Select inputs. Each peripheral data line can be programmed to act as an input or output and each of four control/interrupt lines can operate in one of several control modes. **MC6821**

Industrial (Peripheral) Interface Adapter — Similar to above but will handle the higher (18 V rather than 7.0 V) input voltages desirable for industrial applications. **MC6822**

CMOS Parallel Interface — Contains two conventional 8-bit bidirectional I/O ports and one multiplexed 8-bit port comprising 24 independently programmable I/O lines. Interfaces directly with most industry CMOS and NMOS microprocessors for 8-bit systems. **MC146823**

Programmable Timer — Provides variable system time intervals. Has three 16-bit binary counters, three corresponding control registers and a status register. The counters are under software control and may be used to cause system interrupts and/or generate output signals. May be utilized for frequency measurements, event counting, interval measuring and similar tasks. **MC6840**

Serial . . .

0–600 bps Digital Modem — Designed to be integrated into a wide range of equipment utilizing serial data communications, including stand-alone modems, data-storage devices, remote-data communications terminals and I/O interfaces for minicomputers.

The modem provides the necessary modulation, demodulation and supervisory control functions to implement a serial data communications link, over a voice grade channel, utilizing frequency shift keying (FSK) at bit rates up to 600 bps. It is compatible with the M6800 Microcomputer Family, interfacing directly with the Asynchronous Communications Interface Adapter (below) to provide low-speed data communications capability. **MC6860**

NMOS Asynchronous Communications Interface Adapter — Provides the data formatting and control to interface serial asynchronous data communications information to bus-organized systems.

The parallel data of the bus system is serially transmitted and received by the asynchronous data interface, with proper formatting and error checking. The functional configuration of the ACIA is programmed via the data bus during system initialization. A programmable Control Register provides variable word lengths, clock division ratios, transmit control, receive control, and interrupt control. **MC6850**

CMOS Asynchronous Communications Interface Adapter — Provides a program-controlled interface between 8-bit microprocessor-based systems, serial communication data sets, and modems. An on-chip crystal oscillator and a baud rate generator allow transmission of 15 different program-selected rates, ranging from 50 to 19,200 baud. **MC68HC51**

Same as above, but with special "MOTEL" circuit that permits the device to be used with many different Motorola and Intel MPUs without external conversion. **MC68HC53**

Advanced Data Link Controller — In a bit-oriented data communication system the data is transmitted and received in a synchronous serial form.

The serial data stream must be converted into parallel, analyzed, and stored (for use by the MPU) in order for data link management to be accomplished. Similarly, parallel data from the MPU system must be serialized with the appropriate frame control information in order to conform to the bit-oriented protocol standards. The ADLC provides these functions. **MC6854**

Synchronous Serial Data Adapter — An interface between the M6800 MPU system and synchronous data terminals such as floppy disk equipment, cassette or cartridge tape controllers, numerical control systems and other systems requiring movement of data blocks. Operates up to 600 kbps. **MC6852**

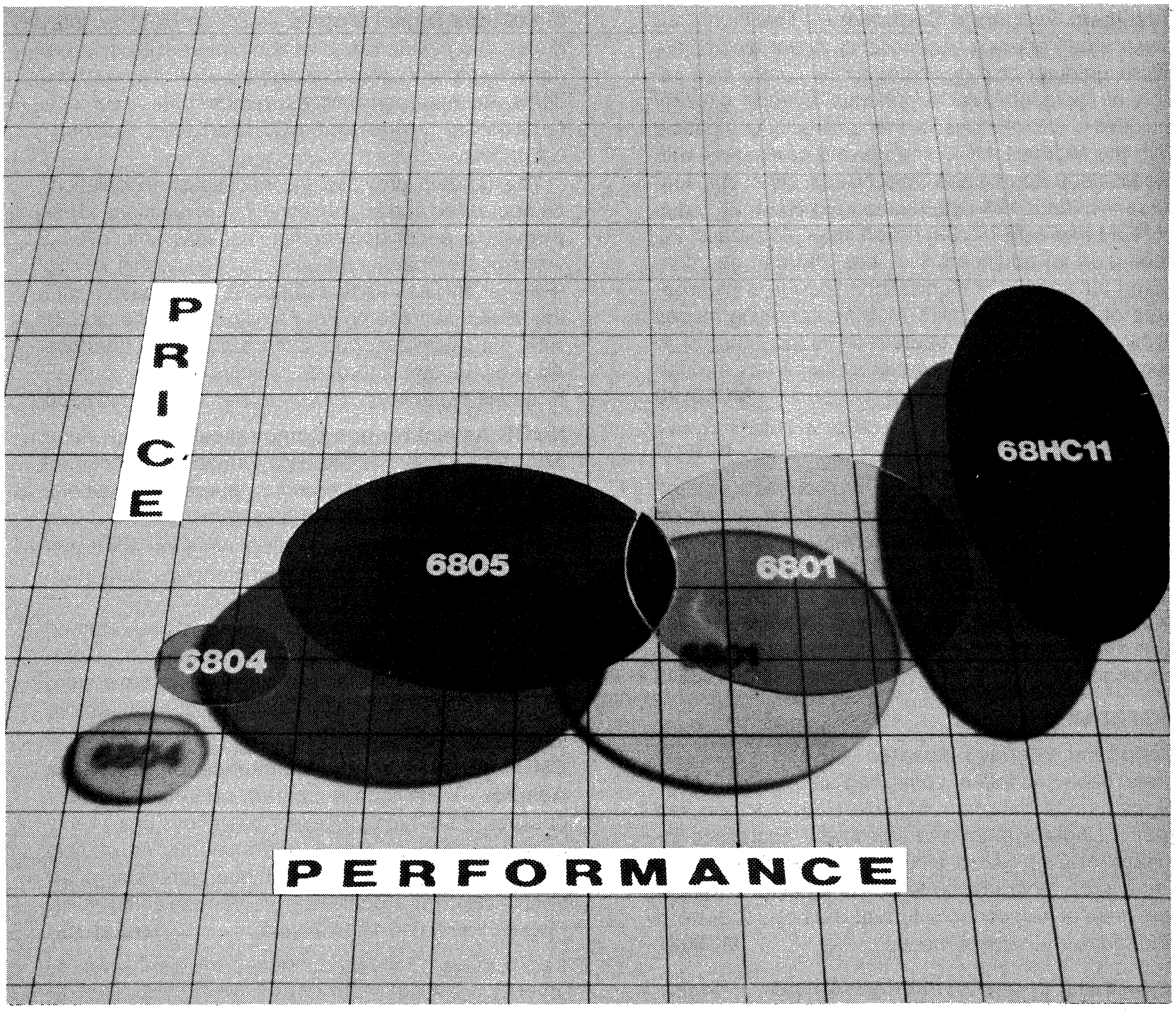

Take a basic MPU, add an on-chip clock oscillator and timer, put in enough Read-Only Memory (ROM) to handle the program routines for a dedicated application, and enough Read/Write (RAM) Memory capacity to handle the associated data manipulations; cap it off with sufficient input/output capability to interface with a number of parallel and serial oriented peripherals and you have a single-chip microcomputer (MCU). The single-chip system doesn't necessarily have all the flexibility of a multi-chip system but, with adequate capacity to handle a specific task, it can reduce component cost, equipment manufacturing cost, and space requirements.

As shown above, Motorola offers four distinct MCU families, each filling a niche in the price/performance ranges demanded by the vast variety of applications in today's marketplace. Evaluation and "selection" places a significant responsibility on the systems designer, but results in maximizing the cost-effectiveness of the ultimate system.

"Technology" is perhaps the first order of selection. The choice is between HMOS (high-density NMOS) and CMOS/HCMOS processors with corresponding typical power consumption of 350–650 mW and 8–30 mW, respectively. Next is the performance category which depends on the CPU "core" capability of the particular MCU family. Finally, within each family, there is the selection of on-chip peripheral functions that most closely fit the requirements of the eventual system.

The M6801 Family: Performance

MOTOROLA

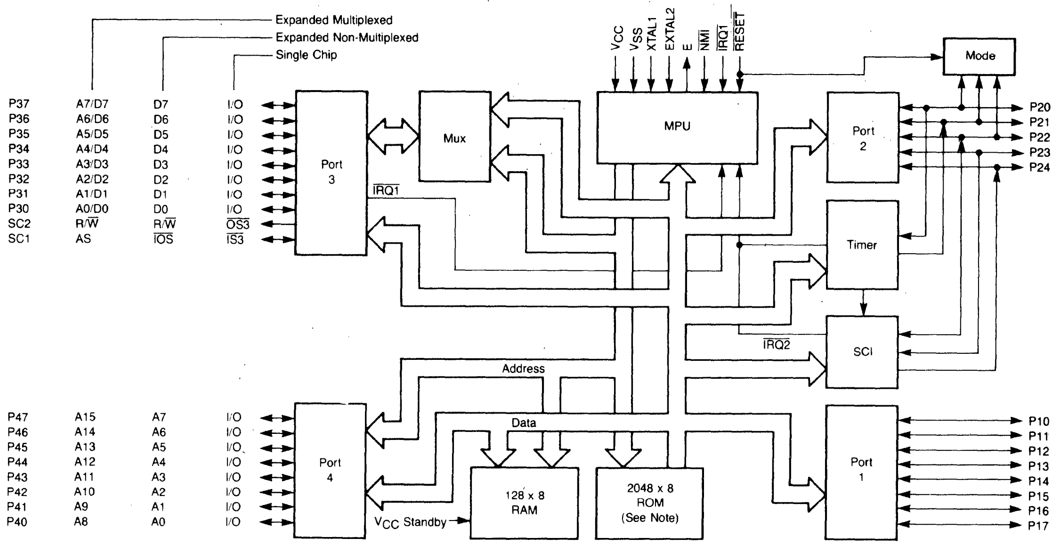
Expanded Multiplexed
Expanded Non-Multiplexed
Single Chip
P37 A7/D7 D7 I/O
P36 A6/D6 D6 I/O
P35 A5/D5 D5 I/O
P34 A4/D4 D4 I/O
P33 A3/D3 D3 I/O
P32 A2/D2 D2 I/O
P31 A1/D1 D1 I/O
P30 A0/D0 D0 I/O
SC2 R/W̄ R/W̄ OS3
SC1 AS IOS IS3
Port 3
Mux
IRQ1
VCC
VSS
XTAL1
EXTAL2
E
NMI
IRQ1
RESET
MPU
Mode
Port 2
P20
P21
P22
P23
P24
Timer
SCI
IRQ2
Address
Data
P47 A15 A7 I/O
P46 A14 A6 I/O
P45 A13 A5 I/O
P44 A12 A4 I/O
P43 A11 A3 I/O
P42 A10 A2 I/O
P41 A9 A1 I/O
P40 A8 A0 I/O
Port 4
VCC Standby
128 x 8 RAM
2048 x 8 ROM (See Note)
Port 1
P10
P11
P12
P13
P14
P15
P16
P17

NOTE: NO FUNCTIONING ROM IN MC6803

MC6801/03 Block Diagram

Features

All Family Members

- Enhanced MC6800 Instruction Set
- 8 x 8 Multiply Instruction
- Serial Communications Interface
- Bus and Code Compatibility with M6800 Family
- 16-Bit, Multi-Function Programmable Timer
- Three Fundamental Operating Modes
- HCMOS and H(N)MOS Family Members
- Internal Clock Generator with Divide-By-Four Output
- Expansion Bus for add-on Peripheral Chips

Selected Family Members

- EPROM Versions
- EEPROM Additive
- Security (option on special order)
- 8-Channel A/D
- Standby RAM Function
- Variable I/O Selectivity
- Variable RAM Capacity Options
- Variable ROM Capacity Options

The M6801 MCU Family is one of the most powerful and most versatile on the market today. Its basic M6800 core has been expanded with 11 new instructions that add significant performance improvement without compromising compatibility with other M6800 MPU and peripheral family members. Among the more significant additions to the instruction set is one which concatenates the two 8-bit accumulators into a single, double-byte accumulator, thus permitting 16-bit internal processing with a substantial improvement in throughput.

Three fundamental operating modes permit the M6801 to operate as a completely self-contained unit (single-chip mode), or in an expanded multiplexed and expanded nonmultiplexed mode. The expanded modes permit the MCU to utilize externally added memory (up to 64K bytes) and I/O capability — a feature that is unique among MCUs.

On-chip peripheral capabilities include a full duplex Serial Communications Interface with a variety of baud rates, a 16-bit free-running timer and a selection of memory options to meet a variety of needs. And various Family members offer a mix of other functions that yield cost-effective optimization for specific requirements.

M6801 Family Options

	HCMOS	HMOS			
	MC68HC11	MC6801	MC6803†	MC6801U4	MC6803U4
RAM	256*	128	128	192	192
Standby RAM	—	64	64	32	32
ROM	4K	2K	—	4K	—
EEPROM	512	—	—	—	—
Timer	16-Bit	16-Bit	16-Bit	16-Bit	16-Bit
Input Capture Functions	3	1	1	2	2
Output Compare Functions	5	1	1	3	3
Serial Communications	Yes	Yes	Yes	Yes	Yes
Serial Peripheral I/O	Yes	No	No	No	No
A-D Converter	8-Bit	No	No	No	No
Real-Time Interrupt	Yes	No	No	No	No
Watchdog System**	Yes	No	No	No	No
Parallel I/O	40	29	13	29	13
EPROM Version	—	**M68701**	—	**MC68701U4**	—

*Saved during standby
**Computer Operates Properly System
†MC6803E is identical except it requires external clock

At the top of the '6801 Family is the recently introduced MC68HC11 HCMOS member. Utilizing new design techniques, it matches the highest (2.1 MHz) nominal bus rate of its fastest NMOS counterpart. On-chip memory includes RAM and ROM as well as 512 bytes of conveniently erasable EEPROM. Additional highly sophisticated on-chip peripheral functions include A-D conversion, serial communications and serial peripheral interface subsystems and the largest array of I/O lines in the Family.

All other Family members use high-density NMOS (HMOS) processing, providing a high degree of chip complexity with relatively small (low-cost) dimensions. On the low end of the scale are the MC6803 members intended for use with external ROM/EPROM; therefore, the ROM (or equivalent) is omitted from the chip with a resultant saving in cost. Other options (the 68701 series) include the substitution of EPROM for the more conventional factory-programmed ROM, thereby offering user-programmability.

The M6805 Family: Flexibility

MOTOROLA

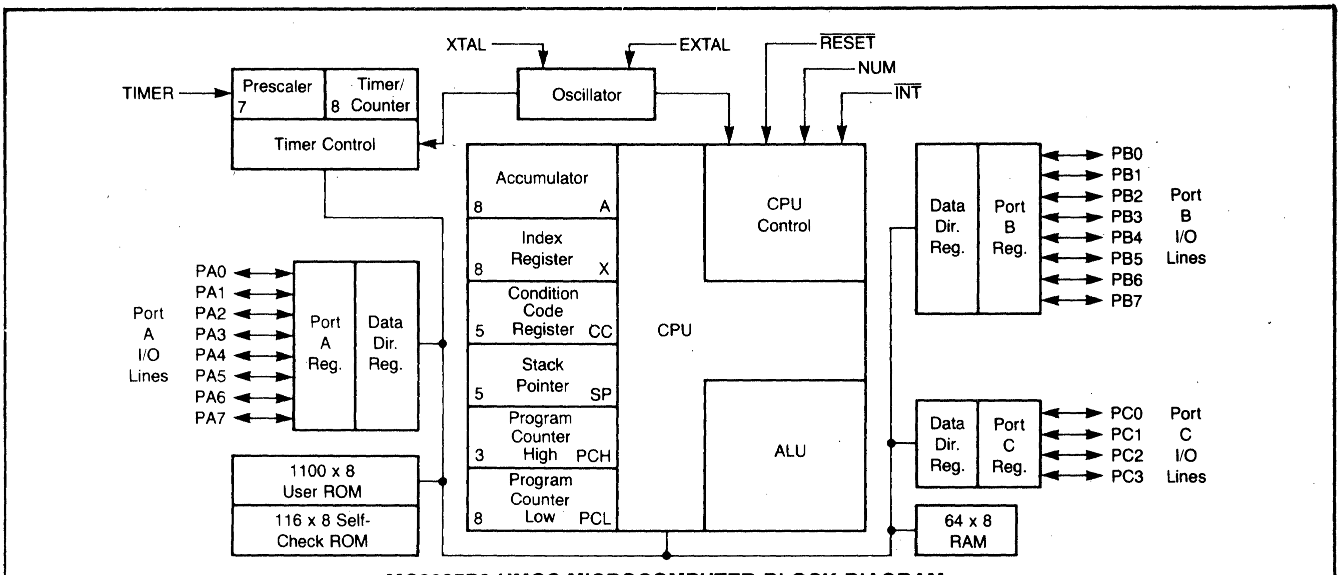
XTAL
EXTAL
RESET
NUM
INT
TIMER
Prescaler 7
Timer/ 8 Counter
Oscillator
Timer Control
Accumulator 8 A
Index Register 8 X
Condition Code Register 5 CC
Stack Pointer 5 SP
Program Counter High 3 PCH
Program Counter Low 8 PCL
CPU
CPU Control
ALU
PA0
PA1
PA2
PA3
PA4
PA5
PA6
PA7
Port A I/O Lines
Port A Reg.
Data Dir. Reg.
1100 x 8 User ROM
116 x 8 Self-Check ROM
Data Dir. Reg.
Port B Reg.
PB0
PB1
PB2
PB3
PB4
PB5
PB6
PB7
Port B I/O Lines
Data Dir. Reg.
Port C Reg.
PC0
PC1
PC2
PC3
Port C I/O Lines
64 x 8 RAM

MC6805P2 HMOS MICROCOMPUTER BLOCK DIAGRAM

Basic Hardware Features
- 8-Bit Architecture
- Common M6800-type CPU "Core"
- Single Power Supply Operation
- On-Chip Oscillator (for Crystal or RC)
- Individually Programmable I/O Lines
- Programmable Timers
- Maskable Interrupts
- All Registers Restored After Interrupt
- Nested Subroutines
- Self-Check Mode on ROM-based MCUs
- Self-programming Bootstrap on EPROM MCUs

Common Software Features
- Control Optimized M6800-compatible Instruction Set
- 10 Powerful Addressing Modes
- Single Instruction Bit Manipulation
- Versatile Interrupt Handling
- Conditional Branches
- Indexed Addressing for Tables
- Memory Usable as Register/Flags

User Selectable Options (See Accompanying Table)
- Choice of Low-Cost HMOS or Low-Power CMOS
- Choice of RAM Capacity
- Choice of ROM Capacity
- Choice of I/O Lines
- ROM/EPROM/EEPROM Versions
- On-Chip Security Option
- A-D or PLL Inputs on Some Types
- Serial Communications Protocols
- Zero Crossing Detection

The M6805 Family was the first 8-bit family to offer the choice of HMOS and CMOS processing — HMOS for high speed and low cost, CMOS for low power consumption, and the latest HCMOS (high-speed CMOS) technology which combines some of the best features of both. It currently offers the widest variety of on-chip memory and I/O selections to provide the user with a system that approximates his "ideal" requirements. This wide selection of functional options, in standard, off-the-shelf components, adds the benefit of low cost to highly complex circuits that closely rival the "applications-specific" advantages of custom designs.

Based on an MC6800 8-bit core, the M6805 Family retains complete software compatibility with other M6800-based families, but operates at bus speeds of up to 2.1 MHz and down to dc (CMOS members) for fully static operation. An enhanced instruction set includes bit-modify and test instructions as well as powerful indexing modes, putting the M6805 Family close to the '6801 on the performance scale.

With the M6805 Family, part numbers beginning with 1468 . . ., represent CMOS components, while the number 7 (68705) indicates the use of EPROM rather than the more conventional on-chip ROM. On-chip peripheral functions unique to certain members of the 6805 Family include phase-lock loop, oscillator synthesizer and 8-bit hardware- or software-programmable prescalers.

Technology Trade-Offs

Features	HMOS	CMOS	HCMOS
Internal Bus Speed	0.1–1.0 MHz	0–1.0 MHz	0–2.1 MHz
Instruction Set	Standard M6805	Standard M6805 plus "STOP" & "WAIT"	Standard M6805 plus "STOP," & "WAIT" & "MUL"
Operating Voltage	4.75–5.75 V	3–6 V (3–5.5 V, EPROM Parts)	3–6 V
Typical Power Consumption	350–650 mW	8–20 mW	30 mW

M6805 Family Variations

CMOS Versions

	HCMOS	CMOS			
	MC68HC05C4	MC146805			
Features		E2	F2	G2	H2
No. of Pins	40	40	28	40	40
RAM (Bytes)	176	112	64	112	112
User ROM (Bytes)	4.1K	0	1K	2K	2K
I/O Lines (Bidirectional)	24	16	16	32	24
I/O Lines (Unidirectional)	0	4	0	4	0
Timer (Bits)	16	8	8	8	8
Special Features	SPI SCI	Bus Expander			COP Synth. Audio Output Tone Gen.
EPROM Version			MC1468705F2	MC1468705G2	

Definitions

SPI = Serial Peripheral Interface
SCI = Serial Communications Interface
PLL = Phase Lock Loop
COP = "Computer Operating Properly" reset timer which acts as a "watchdog" to automatically reset the CPU if not reset by a program sequence within a given amount of time.
EPROM Security = A programming sequence which, when implemented, makes the contents of the EPROM inaccessible.

HMOS Versions

MC6805 (ROM Version)												
	SUFFIX											
Features	P2	P4	P6	S2	S3	T2	R2	R3	U2	U3	K2	K3
No. of Pins	28	28	28	28	28	28	40	40	40	40	40	40
RAM (Bytes)	64	112	64	94	96	64	64	112	64	112	96	96
User ROM (Bytes)	1110	1110	1804	1480	3400	2508	2048	3776	2048	3776	2048	3400
EEPROM											128	256
Bidirectional I/O Lines	20	20	20	21	14	19	24	24	24	24	32	32
Unidirectional I/O Lines	0	0	0	7	7	0	8	8	8	8	0	0
Special Features SPI				X	X							
A-D							X	X				
PLL						X						
COP											X	X

MC68705 (EPROM Version)												
		P3			S3			R3		U3		
EPROM (Bytes)		1804			3400			3776		3776		

The M6804 Family

MOTOROLA

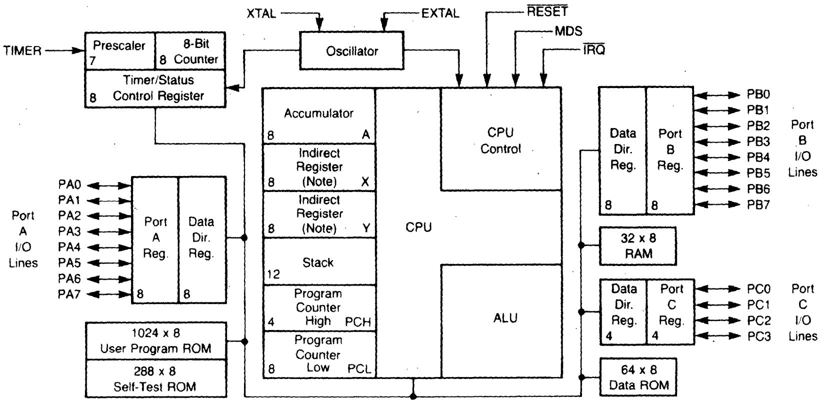
XTAL
EXTAL
RESET
MDS
IRQ
TIMER
Prescaler 7
8-Bit 8 Counter
Oscillator
Timer/Status 8 Control Register
Accumulator 8 A
Indirect Register (Note) 8 X
Indirect Register (Note) 8 Y
Stack 12
Program Counter High 4 PCH
Program Counter Low 8 PCL
CPU
CPU Control
ALU
PA0
PA1
PA2
PA3
PA4
PA5
PA6
PA7
Port A I/O Lines
Port A Reg. 8
Data Dir. Reg. 8
1024 x 8 User Program ROM
288 x 8 Self-Test ROM
Data Dir. Reg. 8
Port B Reg. 8
PB0
PB1
PB2
PB3
PB4
PB5
PB6
PB7
Port B I/O Lines
32 x 8 RAM
Data Dir. Reg. 4
Port C Reg. 4
PC0
PC1
PC2
PC3
Port C I/O Lines
64 x 8 Data ROM

NOTE: 8-Bit indirect registers X and Y, although shown as part of the CPU, are actually located in the 32 x 8 RAM at locations $80 and $81.

MC6804P2 BLOCK DIAGRAM

Somewhat more restrictive than the versatile M6805 Family, the new M6804 Family represents a low-cost means for upgrading earlier 4-bit processor based equipment to the more powerful world of 8-bit processing. It is ideal for dedicated high volume applications in automotive and appliance control, tools, keyboards, games, toys and other uses requiring less demanding interfaces. Internally, program controlled serial processing reduces the number of hardware implemented registers, thereby reducing chip-size and cost, at some sacrifice in processing speed. The objective of minimizing cost led to the development of a self-test scheme in the form of a ROM-driven on-chip signature analysis technique.

This attractive alternative to conventional testing utilizes polynomial division to compress lengthy output responses to much smaller results.

Though limited to only six members (at present) the family, nevertheless, includes both HMOS and HCMOS members, and allows a choice of factory-programmed ROM or field-programmable EPROM.

	HCMOS MC68HC04		**HMOS MC6804**	
	P2	**P3**	**P2**	**J2**
RAM	32	124	32	32
ROM	1K	2K	1K	1K
Timer	8-Bit	8-Bit	8-Bit	—
I/O Lines	20	20	20	12
EPROM Version	—	**MC68HC704P3**	**MC68704P2**	—

Motorola Technical Literature

For free copies of the literature listed below, please contact your nearest Motorola Sales Office or Distributor.

DL132R1 Single-Chip Microcomputer Data Book
A compendium of complete data sheets of all Motorola MCU products and selector guides.

DL133 8-Bit Microprocessor and Peripheral Data
Thorough coverage of Motorola's 8-bit MPU families including the M6800 and M6809.

Application Notes:

AN-797	MC6801/03 Port Expansion
AN-798A	A Low-Cost Terminal Using the MC6801
AN-807	Special Considerations in Using the MC6801 Interrupt Capabilities
AN823A	CBUG05 Debug Monitor Program for MC6805E2 Microprocessor Unit
AN-832	Letting the MC68701 Program Itself
AN-852	Monitor for the MC146805G2L1 Microcomputer
AN-857	MC68705P3/R3/U3 8-bit EPROM Microcomputer Programming Module
AN-863	Keyless Entry System Using an MC146805F2( )1 Microcomputer Unit
AN869	Application Summary for the MC6805R2( )1 Single-Chip Microcomputer with A/D Converter
AN-871	An Applications Summary for the MC6805T2L1 PLL MCU
AN-883	A Radio Set PLL Using an MC6805T2( )2 MCU
AN-884	An Expanded MC146805F2/G2 Emulator Using the MC146805E2 Microprocessor Unit
AN-885	A General Purpose Frequency Counter Using an M6805 HMOS/M146805 CMOS Family
AN-888	Monitor for the MC146805F2L1 Microcomputer
AN-900	Using the M6805 Family On-Chip 8-Bit ADCs
AN-901	Serial Communications Interface (SCI) Using the MC6805S2 Serial Peripheral Interface (SPI)
AN-903	User-Callable Self-Check Subroutines for the M6805 HMOS/M146805 CMOS Family

OUR IRS* ISN'T TAXING

*IMMEDIATE RESPONSE SYSTEM

Dear IC MASTER User:

ANNOUNCING . . . A **new,** innovative way to request and receive up-to-date IC product data.

The IC MASTER introduces an IMMEDIATE response system. Operational **24 hours a day, 7 days a week,** you can now phone in your requests for the most current IC product data available from IC manufacturers who have product data sheets in the IC MASTER, at no cost to you. Here's all you do:

Step 1 **Phone 800-443-0100** and ask for Extension #518

Step 2 When asked, simply tell the operator the name(s) of the manufacturer whose part you are interested in . . . the **specific** part number you want information on . . . if you want a data sheet and/or an application note . . . and if you want a salesperson to call.

Step 3 Provide your name, title, company, address, and phone number.

That's all you do! We do the rest. Your request will be in the hands of the company you inquired about within 24 hours.

We will follow up within a week to make sure your request was expedited and your needs were met.

It's important to us that we provide you with the best source of up-to-date IC product data available in the market . . . we've been doing it for over ten years, and we aren't stopping now.

We hope this **added new** service will contribute to a further reduction in your IC selection time.

800 CALL TOLL
443-0100 FREE
EXT. 518

NCR Microprocessors

NCR 65C02

8-bit Microprocessor, software compatible with the NMOS 6502. 2 MHz operation, 64K-byte addressable memory, low power consumption 4mA @ 1 MHz.

NCR 65C21

Peripheral Interface Adapter, with two 8-bit bidirectional I/O ports, and four peripheral control/interrupt input lines.

NCR 65C22

Versatile interface adapter with internal timer/counters. Compatible with NMOS 6522. Two powerful 16-bit programmable internal timer/counters. Latched input/output registers on both I/O parts.

NCR 65CX02

Identical to 65C02 except for the addition of four bit manipulation instructions (SMB, RMB, BBS, BBR). Will operate at 2, 3, or 4 MHz.

NCR Microcomputers

All parts have I/O capabilities of 32 bi-directional lines, are powered by a 5V power supply, and are packaged in a 40 pin DIP.

Part Number	Memory		Technology	Counter/Timer	Internal Frequency	Other Features
	ROM	RAM				
NCR 6500/1	2048 X 8	64 X 8	NMOS	16-bit Programmable	1,2,3 MHZ	
NCR 6500/11	3072 X 8	192 X 8	NMOS	(2) 16-bit Programmable	1 or 2 MHz	Full Duplex UART 10 Interrupts
NCR 65C00/1	2048 X 8	64 X 8	CMOS	16-bit Programmable	1,2,4 MHz	Low Power 4mA/MHz Max 1mA/MHz Typical
NCR 65C00/2	3072 X 8	64 X 8	CMOS	16-bit Programmable	1,2,4 MHz	Low Power 4mA/MHz Max 1mA/MHz Typical
NCR 65C00/3	4096 X 8	128 X 8	CMOS	16-bit Programmable	1,2,4 MHz	Low Power 4mA/MHz Max 1mA/MHz Typical

Copyright © 1985 by NCR Corporation, Dayton, Ohio, U.S.A.
All Rights Reserved. Printed in the U.S.A.

CONTACT: Marketing Dept., NCR Microelectronics Div.
1635 Aeroplaza Dr., Colorado Springs, CO 80916
PHONE: 1-800-525-2252 or 596-5612 (Colorado only) TELEX: 452457 NCR MICRO CSP

NCR 7300 and 7301 Color Graphics Controller

Features

- Bit Mapped Graphics and Text
- Variable M x N Character Format
- DRAM Frame Buffer to 1 Mbyte
- 8-bit or 16-bit Interface
- Block Move Commands
- Compete Frame Buffer Management
- Pixel Rates to 30 MHz
- Uses Standard Dynamic RAMs
- GSS VDI Driver
- Analog RGB outputs
- Bit Mapped Cursor
- On-chip Color Lookup Table
- Supports up to 8 bits per Pixel
- Writes all Bit Planes Simultaneously
- Frame Buffer DMA to/from System RAM
- Software Setup of Display Formats
- High Level Command Set (reduces software development costs)

Functional Description

The NCR 7300 CGC (Color Graphics Controller) and 7301 MIC (Memory Interface Controller) comprise the heart of a high performance bit mapped graphics system. Sophisticated features and functions provide reduced system software costs and a very low system parts count.

The 7300 and 7301's parallel architecture varies memory word width as the number of bit planes supported varies. Full color systems operate at the same rate as monochrome systems. This architecture provides efficient memory utilization (no memory is wasted in systems that support an odd number of bit planes) and allows the system to be easily expanded and upgraded.

A wealth of software and target applications are available to the system designer via the NCR 7300 VDI device driver. The driver is from GSS (Graphics Software Systems) and provides direct compatibility with GKS packages for IBM and AT&T compatible systems. The 7300 command set is well suited for use in standards based graphics systems.

Glue logic, other than the usual memory address line buffers, has virtually been eliminated. Functions which usually require additional external components in other systems have been incorporated in the 7300 and 7301. The 7300 includes all video shift logic, color lookup table with overlay mode, analog outputs, bit mapped cursor, and complete frame buffer management. The 7301 MIC supports raster operations, image alignment, and drawing mode functions.

The variable memory word width of the system in addition to the cache memory drawing method utilized by the 7300 results in high performance graphics and the ability to use commercially available dynamic RAMs. The cache memory drawing method uses an on-chip sequencer to perform display refresh while the 7300's drawing processor draws images to the cache memory. During display blanking intervals, the images in the cache memory are downloaded to the frame buffer. In this way images are drawn very quickly without producing flashes on the display and the cost advantages of commercial DRAMs are retained.

FUNCTIONAL BLOCK DIAGRAM

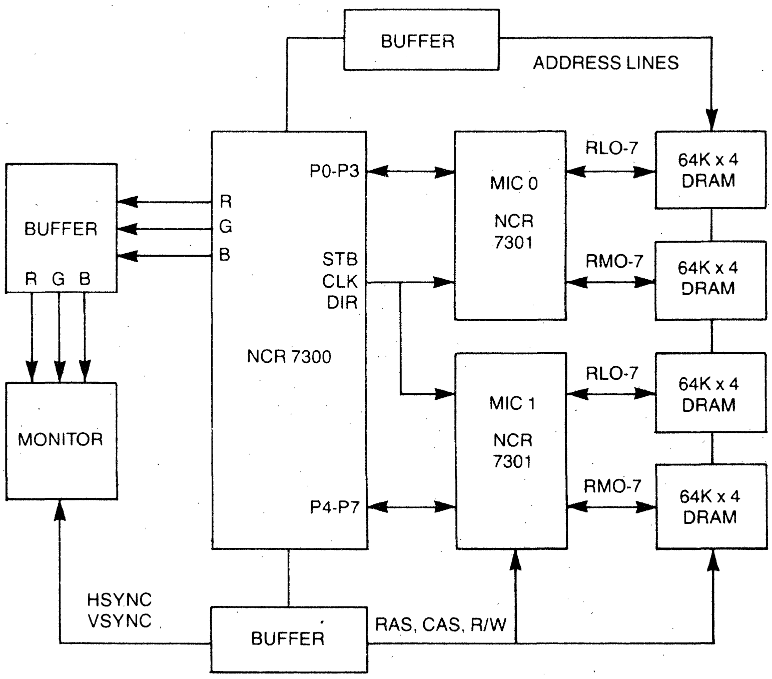

Timing and display formats (the number of lines displayed and number of pixels per line) are software defined, allowing the system to be used for a wide range of applications, the only limiting factors being the size of the frame buffer (up to 1024 x 1024 x 8) and a maximum 30 MHz video rate. The 16 color system shown at the left can produce a spectrum of formats including popular formats such as 640 x 200, 350, 400, 480; 800 x 400, 960 x 350; all non-interlaced with 60 Hz refresh. With a 1024 x 1024 frame buffer, the system can store multiple screens or produce interlaced displays such as 1000 x 700.

Copyright © 1985 by NCR Corporation, Dayton, Ohio, U.S.A.
All Rights Reserved. Printed in the U.S.A.

CONTACT: Marketing Dept., NCR Microelectronics Div.
1635 Aeroplaza Dr., Colorado Springs, CO 80916
PHONE: 1-800-525-2252 or 596-5612 (Colorado only) TELEX: 452457 NCR MICRO CSP

CMOS Microprocessors, Memories and Peripherals

Product Classification Chart

Microprocessors

Part Number	Description
CDP1802A,AC	8-Bit
CDP1802BC	8-Bit
CDP1805AC	8-Bit with RAM and Counter/ Timer
CDP1806AC	8-Bit with RAM and Counter/ Timer
CDP6805E2	8-Bit with RAM, I/O, Counter/ Timer
CDP6805E3	8-Bit with RAM, I/O, Counter/ Timer

Microcomputers

Part Number	Description
CDP1804AC	8-Bit with RAM, ROM, Counter/ Timer
CDP1804PCE	8-Bit
CDP68HC04P2	8-Bit with RAM, ROM, I/O, Counter/Timer
CDP68HC04P3	8-Bit with RAM, ROM, I/O, Counter/Timer
CDP68HC05C4	8-Bit with RAM, ROM, I/O, Counter/Timer
CDP68HC05D2	8-Bit with RAM, ROM, I/O, Counter/Timer
CDP6805F2	8-Bit with RAM, ROM, I/O, Counter/Timer
CDP6805G2	8-Bit with RAM, ROM, I/O, Counter/Timer

Peripherals

Part Number	Description
CDP1851,C	Programmable I/O Interface
CDP1852,C	Byte-Wide I/O Port
CDP1872C	8-Bit Input Port
CDP1874C	8-Bit Input Port
CDP1875C	8-Bit Output Port
CDP6823	Parallel Interface
CDP1853,C	1 of 8 Decoder
CDP1858,C	4-Bit Latch & Decoder
CDP1859,C	4-Bit Latch & Decoder
CDP1866,C	4-Bit Latch & Decoder
CDP1867,C	4-Bit Latch & Decoder
CDP1868,C	4-Bit Latch & Decoder
CDP1873C	1 of 8 Binary Decoder
CDP1881,C	6-Bit Latch & Decoder
CDP1882,C	6-Bit Latch & Decoder
CDP1883,C	7-Bit Latch & Decoder
CDP1854A, AC	Programmable UART
CDP6402,C	Programmable UART
CDP65C51	Asynchronous Communications Interface Adapter
CDP6853	Asynchronous Communications Interface Adapter, (ACIA), Motel Bus

Peripherals (Cont'd)

Part Number	Description
CDP1855,C	8-Bit Programmable Multiply/ Divide Unit (MDU)
CDP1856,C	4-Bit Bus Buffer/Separator
CDP1857,C	4-Bit Bus Buffer/Separator
CDP1869C	Video Interface System (VIS)
CDP1870C	Video Interface System (VIS)
CDP1876C	Video Interface System (VIS)
CDP1871A,AC	Keyboard Encoder, ASC111 Hex
CDP1863,C	8-Bit Programmable Counter
CDP1878,C	Dual Counter-Timer
CDP1879,C-1	Real-Time Clock
CDP6818	Real-Time Clock with RAM, MOTEL Bus
CDP6848,C	Dual Counter-Timer, MOTEL Bus
CDP68HC68T1	SPI Real-Time Clock
CDP1877,C	Programmable Interrupt Controller
CDP68HC68A1	SPI A/D Converter

RAMs

Part Number	Description
CDP1822,C	256 x 4
CDP1823,C	128 x 8
CDP1824,C	32 x 8
CDP1826C	64 x 8
CDM6116A	2K x 8
CDM6117A-3	2K x 8
CDM6118A-3	2K x 8
CDM6264	8K x 8
MWS5101	256 x 4
MWS5101A	256 x 4
MWS5114	1K x 4
CDP68HC68R1	SPI RAM 128-Bytes
CDP68HC68R2	SPI RAM 256-Bytes

Mask-Programmable ROMs

Part Number	Description
CDM53128	16K x 8
CDM53256	32K x 8
CDM5332	4K x 8
CDM5332PE	4K x 8
CDM5333	4K x 8
CDM5364,A	8K x 8
CDM5365	8K x 8
CPD1831,C	512 x 8
CDP1832,C	512 x 8
CDP1833,C,BC	1K x 8
CDP1834,C	1K x 8
CDP1835C	2K x 8
CDP1837C	4K x 8
CDP65516	2K x 8

1800 CMOS Microprocessors and Microcomputers

The CDP1800 Series Microprocessor and Microcomputer family comprise the CDP1802A, CDP1805A, and CDP1806A microprocessors and the CDP1804A microcomputer.

The **RCA-CDP1802A CMOS microprocessor** is an 8-bit silicon-gate CMOS register-oriented central-processing unit (CPU) designed for use as a general-purpose computing or control element in a wide variety of commercial, industrial, and military applications.

The CMOS technology provides a high noise immunity to enable the CDP1802A to operate in electrically hostile environments. The CDP1802A can be powered by an unregulated power supply over a wide operating-voltage range. Further, the processor is completely static so that its system clock can be controlled to interface with slow memories or stopped to reduce power consumption during standby conditions.

The CDP1802A provides a set of simple, easy-to-use general-purpose instructions to permit the design of programs for CDP1802A-based products with minimum effort.

The **CDP1804A, CDP1805A, and CDP1806A** represent enhanced, extended versions of the CDP1802A microprocessor family. The hardware and software additions, however, still allow these devices to be upward software and hardware compatible with the CDP1802A microprocessor family.

The CDP1804A, the most complex device in the family, has 2K bytes of mask-programmable ROM, 64 bytes of RAM, an 8-bit counter-timer, 32 new instructions for enhanced data and interrupt handling, and timer-counter control. The internal ROM may be deactivated for prototyping or test and debug purposes. The CDP-1805A is a ROM-less version of the CDP1804A, useful for prototyping the CDP1804A function or for systems in which the memory size is greater than 2K bytes, or can change during the development or production cycle. For further economy, a ROM-less, RAM-less CDP1806A version is offered for larger systems that require significant RAM and/or ROM.

Comparison of CMOS CDP1800-Series Microprocessors and Microcomputers

Feature	CDP1802A	CDP1802B	CDP1804A	CDP1805A	CDP1806A
Memory Addressing	64K Bytes	64K Bytes	64K Bytes	64K Bytes	64K Bytes
Internal ROM	—	—	2K Bytes	—	—
Internal RAM	—	—	64 Bytes	64 Bytes	—
Latched I/O Lines		Off-Chip			
Timer/Counter	—	—	8 Bit	8 Bit	8 Bit
Bus Structure		Multiplexed Address Lines			
Operating Temperature Range		-40 to 85°C			

Block Diagram of CDP1800-Series Family

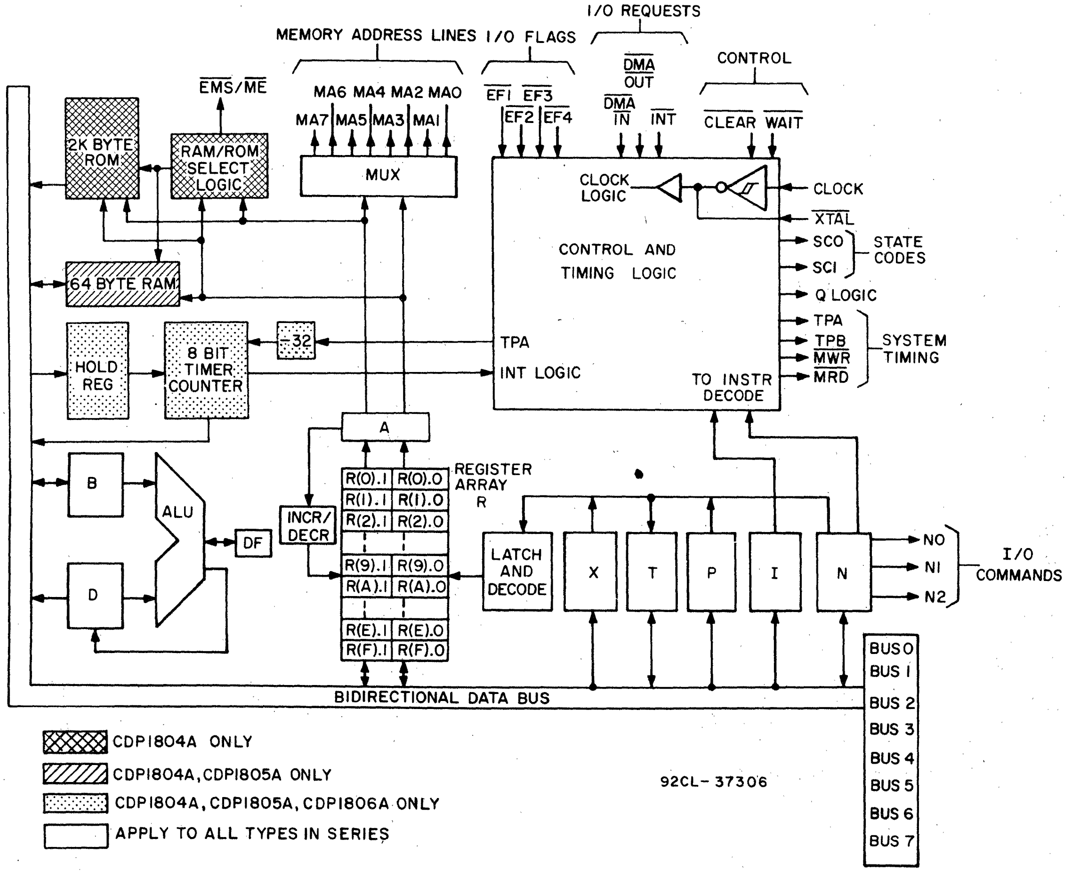
I/O REQUESTS
MEMORY ADDRESS LINES
I/O FLAGS
DMA OUT
CONTROL
EMS/ME
MA6 MA4 MA2 MA0
MA7 MA5 MA3 MA1
EF1 EF3
EF2 EF4
DMA IN
INT
CLEAR
WAIT
2K BYTE ROM
RAM/ROM SELECT LOGIC
MUX
CLOCK LOGIC
CLOCK
XTAL
CONTROL AND TIMING LOGIC
SC0
SC1
STATE CODES
Q LOGIC
TPA
TPB
MWR
MRD
SYSTEM TIMING
64 BYTE RAM
HOLD REG
8 BIT TIMER COUNTER
÷32
TPA
INT LOGIC
TO INSTR DECODE
A
B
ALU
DF
D
INCR/DECR
R(0).1 R(0).0
R(1).1 R(1).0
R(2).1 R(2).0
R(9).1 R(9).0
R(A).1 R(A).0
R(E).1 R(E).0
R(F).1 R(F).0
REGISTER ARRAY R
LATCH AND DECODE
X
T
P
I
N
N0
N1
N2
I/O COMMANDS
BIDIRECTIONAL DATA BUS
BUS 0
BUS 1
BUS 2
BUS 3
BUS 4
BUS 5
BUS 6
BUS 7
CDP1804A ONLY
CDP1804A, CDP1805A ONLY
CDP1804A, CDP1805A, CDP1806A ONLY
APPLY TO ALL TYPES IN SERIES
92CL-37306

6805 CMOS Microprocessors and Microcomputers

The CDP6805-Series comprise the CDP6805E2 microprocessor and the CDP6805F2 and CDP6805G2 microcomputers. The central processor unit (CPU) CDP6805E2 contains the 8-bit arithmetic logic unit, accumulator, program counter, index register, stack pointer, condition code register, instruction decoder, and timing and control logic. The microcomputer versions CDP6805F2 and CDP-6805G2 contain on-chip oscillator, CPU, RAM, ROM, I/O, and timer. The on-chip RAM permits these devices to operate without external memory. The addressing modes and register-like memory operations use this RAM to the fullest extent possible.

The CDP6805 Series features parallel I/O capability, with each pin programmable as an input or as an output.

The external interrupt input, and the capability for multiple nesting of subroutines and interrupts, are features usually found on much more powerful architectures. These features permit the CDP6805-series microcomputers to be used in projects usually considered too complex for microcomputers. The external interrupt and timer/counter interrupt are vectored to different service routine addresses. This arrangement greatly simplifies interrupt programming. It also speeds execution of interrupt routines, by eliminating software interrupt polling.

The CDP6805F2 and CDP6805G2 have an on-chip timer/counter which greatly simplifies software development and extends the capability of these microcomputers. This 8-bit counter and its prescaler can be programmed for many functions. It can generate an interrupt at software-selected intervals, and can also be used as an event counter to generate an interrupt after some software selected number of external events. The timer/counter can also be used for timekeeping, measuring and generating pulses, and counting external events. The timer can also be set to "wake-up" the processor from the power-saving WAIT mode.

The first 16 address spaces of these devices are reserved for memory mapped I/O registers. The programmer of the CDP6805-Series may take full advantage of the versatile addressing modes and the register-like RAM operations of this family.

User ROM sizes range from zero, to greater than 2K for the microprocessor. A self-check ROM is available on the CDP6805F2 and CDP6805G2 as part of the device. The ROM area used in the self-check operation is not included in the published ROM sizes. The user can get the entire ROM space for his program. A small portion of the ROM is located in page zero (the direct page) to facilitate more efficient access to lookup tables using all available addressing modes. This ROM can also be used for program storage as well as lookup tables.

The CDP6805 Family includes types with either 64 or 112 bytes of on-chip RAM located in page zero.

Package size options permit as many as four, full 8-bit bidirectional I/O ports. Each pin is defined under software control as an input or output by loading a data direction register.

Comparison of CMOS CDP6805-Series Microprocessors and Microcomputers

Feature	CDP6805E2	CDP6805F2	CDP6805G2
Memory Addressing	8K Bytes	—	—
Internal ROM	—	1K Bytes	2K Bytes
Internal RAM	112 Bytes	64 Bytes	112 Bytes
Latched I/O Lines	16	16	32
Timer/Counter	8 Bit	8 Bit	8 Bit
Bus Structure	Motel Bus Multiplexed Address/Data Lines		
Operating Temp. Range	0 to +70°C -40 to +85°C ("C" suffix types)		

Block Diagram of CDP6805 Family

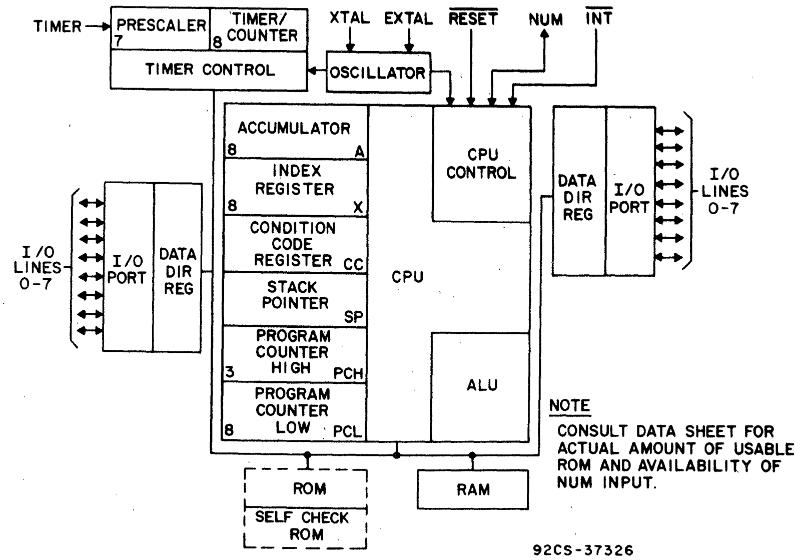
TIMER
PRESCALER 7
TIMER/ COUNTER 8
TIMER CONTROL
XTAL
EXTAL
RESET
NUM
INT
OSCILLATOR
ACCUMULATOR 8 A
INDEX REGISTER 8 X
CONDITION CODE REGISTER CC
STACK POINTER SP
PROGRAM COUNTER HIGH 3 PCH
PROGRAM COUNTER LOW 8 PCL
CPU CONTROL
CPU
ALU
I/O LINES 0-7
I/O PORT
DATA DIR REG
DATA DIR REG
I/O PORT
I/O LINES 0-7
ROM
SELF CHECK ROM
RAM
NOTE
CONSULT DATA SHEET FOR ACTUAL AMOUNT OF USABLE ROM AND AVAILABILITY OF NUM INPUT.
92CS-37326

CMOS Random-Access Memories (RAMs)

RCA offers a full line of low power CMOS RAMs with industry standard pinouts for general-purpose use as well as for use with the CDP1800 line of microprocessors. RAM sizes range from 256 bits to 64 K bits and are designed for use in memory systems where high speed, low power, minimal data retention voltage and simplicity in use are desireable.

Features

- All the power savings and noise immunity of CMOS
- Low operating current
- Low standby currents
- Fast access times
- Data retention voltages as low as 2 volts
- CDP1800-series or industry standard pinouts

RAM Type	Organization	Supply-Voltage Range V_{SS} to V_{DD}	Operating-Temperature Range (T_A)	Electrical Characteristics at V_{DD} = 5 Volts								Sugg. Latch/De-coder	TTL Input	JEDEC Dual-In-Line Package
				Data Retention		Max. Standby Current	Min. Sink Current	Min. Source Current	Max. Operating Current (e)	Max. Access Timer				
				Voltage Min.	Quiescent Current Max.					From Address Change	From Chip Select			No. of Pins
		Volts	°C	volts	µA	µA	mA	mA	mA	ns	ns	CDP-		
CDP1822[a]	256 x 4	4 to 10.5	-40 to +85	2	100	500	2	-1	8	450	450	1868	No	22
CDP1823[a]	128 x 8	4 to 10.5	-40 to +85	2	100	500	2	-1	8	450	250	1859 1866 1867 1868		24
CDP1824[a]	32 x 8	4 to 10.5	-40 to +85	2.5	10	50	1.8	-0.9	8	710	710	—		18
CDP1826C	64 x 8	4 to 6.5	-40 to +85	2.5	25	50	1.6	-1	10	700	700	—		22
CDM6116A-2	2K x 8	4.5 to 5.5	0 to +70	2	15[b]	30	2.1	-1	35[d]	200	—	1881 1882	Yes	24
CDM6116A-3	2K x 8	4.5 to 5.5	0 to +70	2	25[b]	50	2.1	-1	35[d]	150	—			24
CDM6116A-9	2K x 8	4.5 to 5.5	-40 to +85	2	50[b]	100	2.1	-1	40[d]	250	—			24
CDM6117A-3	2K x 8	4.5 to 5.5	0 to +70	2	25[b]	50	2.1	-1	35[d]	150	60	1881		24
CDM6118A-3	2K x 8	4.5 to 5.5	0 to +70	2	25[b]	50	2.1	-1	35[d]	150	—	1881		24
CDM6264-1	8K x 8	4.5 to 5.5	0 to +70	2	50	100	2.1	-1	9	150	—	1883		28
CDM6264-2	8K x 8	4.5 to 5.5	0 to +70	2	50	100	2.1	-1	9	120	—	1883		28
MWS5101-L2	256 x 4	4 to 6.5	0 to +70	2	10	50	2	-1	8	250	250	1858	No	22
MWS5101-L3	256 x 4	4 to 6.5	0 to +70	2	50	200	2	-1	8	350	350			22
MWS5101A-L2	256 x 4	4 to 6.5	0 to +70	2	10	50	2	-1	8	250	250		Yes	22
MWS5101A-L3	256 x 4	4 to 6.5	0 to +70	2	50	200	2	-1	8	350	350			22
MWS5114-1	1K x 4	4.5 to 6.5	0 to +70	2	125	250	2	-0.4	8	300	—	1866 1868		18
MWS5114-2	1K x 4	4.5 to 6.5	0 to +70	2	50	100	2	-0.4	8	250	—			18
MWS5114-3	1K x 4	4.5 to 6.5	0 to +70	2	50	100	2	-0.4	8	200	—			18

[a] Data available for V_{DD} = 10 volts

[b] V_{DD} = 3 volts

[c] V_{DD} = Specified data retention voltage, except as noted

[d] Output open-circuited minimum cycle time

[e] Output open-circuited, cycle time = 1 µs, except as noted

System Expanders

CDP1858/1859	Memory address latch with 4 bit latch decoders
CDP1866/1867/1868	4 bit latch decoders
CDP1881/1882	Memory address latch with 6 bit latch decoders
CDP1883	Memory address latch with 7 bit latch decoders

CMOS Read-Only Memories (ROMs)

ROM Type	Organization	Supply Voltage Range (V_{SS} to V_{DD}) Volts	Operating-Temperature Range (T_A) °C	Max. Standby Current (I_{DD}) µA	Min. Sink Current (I_{OL}) mA	Electrical Characteristics (V_{DD} =5 Volts): Min. Source Current (I_{OH}) mA	Max. Operating Current (I_{DD1}/I_{OPER}) mA	Max. Access Time: From Address Change ns	From Chip Select ns	From Output Enable ns	JEDEC Dual-In-Line Package No. of Pins
CDP1831	512 x 8	4 to 10.5	-40 to +85	50	0.55	-0.35	10†	1000	800	—	24
CDP1831C	512 x 8	4 to 6.5	-40 to +85	200	0.55	-0.35	10†	1000	800	—	24
CDP1832	512 x 8	4 to 10.5	-40 to +85	50	0.55	-0.35	10†	1000	550	—	24
CDP1832C	512 x 8	4 to 6.5	-40 to +85	200	0.55	-0.35	10†	1000	550	—	24
CDP1833	1K x 8	4 to 10.5	-40 to +85	50	0.8	-0.8	10†	775	625	—	24
CDP1833C	1K x 8	4 to 6.5	-40 to +85	200	0.8	-0.8	10†	775	625	—	24
CDP1834	1K x 8	4 to 10.5	-40 to +85	50	0.8	-0.8	10†	750	700	—	24
CDP1834C	1K x 8	4 to 6.5	-40 to +85	200	0.8	-0.8	10†	750	700	—	24
CDP1835C	2K x 8	4 to 6.5	-40 to +85	50	0.8	-0.8	10*	500	200	—	24
CDP1837C	4K x 8	4 to 6.5	-40 to +85	50	0.8	-0.8	10*	500	200	—	24
CDP65516-43	2K x 8	4.5 to 5.5	0 to +70	30	1.6	-1.6	15*	430	—	—	18
CDP65516-55	2K x 8	4.5 to 5.5	0 to +70	50	1.6	-1.6	15*	550	—	—	18
CDM5332	4K x 8	4 to 6.5	-40 to +85	50	2.4	-1.2	25*	350	150	—	24
CDM5333	4K x 8	4 to 6.5	-40 to +85	50	2.4	-1.2	25*	350	150	—	24
CDM5364	8K x 8	4 to 6.0	-40 to +85	50	3.2	-3.2	10*	250	—	—	24
CDM5364A	8K x 8	4 to 6.0	-40 to +85	50	3.2	-3.2	10*	250	—	—	24
CDM5365A	8K x 8	4 to 6.0	-40 to +85	50	3.2	-3.2	10*	250	—	90	28
CDM53128	16K x 8	4 to 6.0	-40 to +85	50	3.2	-3.2	10*	250	—	90	28
CDM53256	32K x 8	4 to 6.0	-40 to +85	50	3.2	-3.2	12*	250	—	90	28

†Output open-circuited; cycle time, 2.5 µs

*Output open-circuited; cycle time, 1 µs

System Interfacing

A list of suggested latch and decoder circuits for interfacing RCA ROMs with several general-purpose microprocessors is shown in Table 1. Diagrams are shown for several minimum system configurations including a typical "Daisy Chain" connection.

TABLE I — INDUSTRY MICROPROCESSORS AND MICROCOMPUTERS

Microprocessor/Micro-computer Series	**CDP1800**	**CDP6805E2**	**8085, 8051, NSC800**	**Z80**	**6502**
Addressable Memory Space	65K	8K	65K	65K	65K
Type of Bus / RCA ROM	Multiplexed Address/Address Separate $\overline{RD}$&$\overline{WR}$	Multiplexed Address/Data RD/$\overline{WR}$ · Strobe	Multiplexed Address Data Separate $\overline{RD}$&$\overline{WR}$	Non-Multiplexed Separate $\overline{RD}$ & $\overline{WR}$	Non-Multiplexed RD/$\overline{WR}$ · Strobe
CDP1837C (24 Pin, 4K x 8)	Direct Connect	Not Applicable	Not Applicable	Not Applicable	Not Applicable
CDM5332, CDM5333 (24 Pin, 4K x 8)	CDP1881 or CDP1882	CDP1875 or HC573 (Octal Latches)	CDP1875 HC573 plus HC154* Decoder	HC154* Decoder	HC154* Decoder
CDM5364, CDM5364A (24 Pin, 8K x 8)	CDP1883	CDP1875 or HC573	CDP1875 or HC573 plus CDP1873† or HC138†	CDP1873† or HC138†	CDP1873† or HC138†
CDM5365 (28 Pin, 8K x 8)	CDP1875 or HC573	CDP1875 or HC573	CDP1875 or HC573	Direct Connect	Direct Connect
CDM53128 (28 Pin, 16K x 8)	CDP1872 CDP1874 CDP1875	Not Applicable	CDP1875 or HC573	Direct Connect	Direct Connect
CDM53256 (28 Pin, 32K x 8)	CDP1872 CDP1874 CDP1875	Not Applicable	CDP1875 or HC573	Direct Connect	Direct Connect

*Required for more than 2 CDM5332 or CDM5333 memory devices

†Required for more than 1 CDM5364 or CDM5364A memory device

System Interfacing

Daisy Chaining CDP1833 ROM's

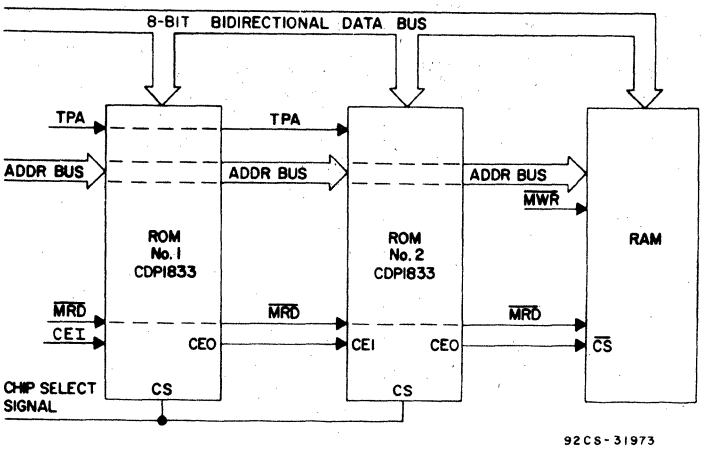
8-BIT BIDIRECTIONAL DATA BUS
TPA
TPA
ADDR BUS
ADDR BUS
ADDR BUS
MWR
ROM No. 1 CDP1833
ROM No. 2 CDP1833
RAM
MRD
MRD
MRD
CEI
CEO
CEI
CEO
CS
CHIP SELECT SIGNAL
CS
CS
92CS-31973

"Daisy Chaining" with CEI inputs and CEO outputs is used to avoid memory conflicts between ROM and RAM in a user system. In the configuration shown, the RAM is driven from the daisy chained CEO of the ROMs, the RAM is selected only if both ROMs are not addressed. For example, if ROM #1 is masked-programmed for memory locations 0000-03FF$_{16}$ and ROM #2 is masked-programmed for memory locations 0400$_{16}$-07FF$_{16}$, for addresses from 0000-07FF$_{16}$ the RAM is disabled and the ROM enabled. For locations above 07FF$_{16}$ the ROM's are disabled and the RAM enabled.

CDP1800-Series Microprocessor System

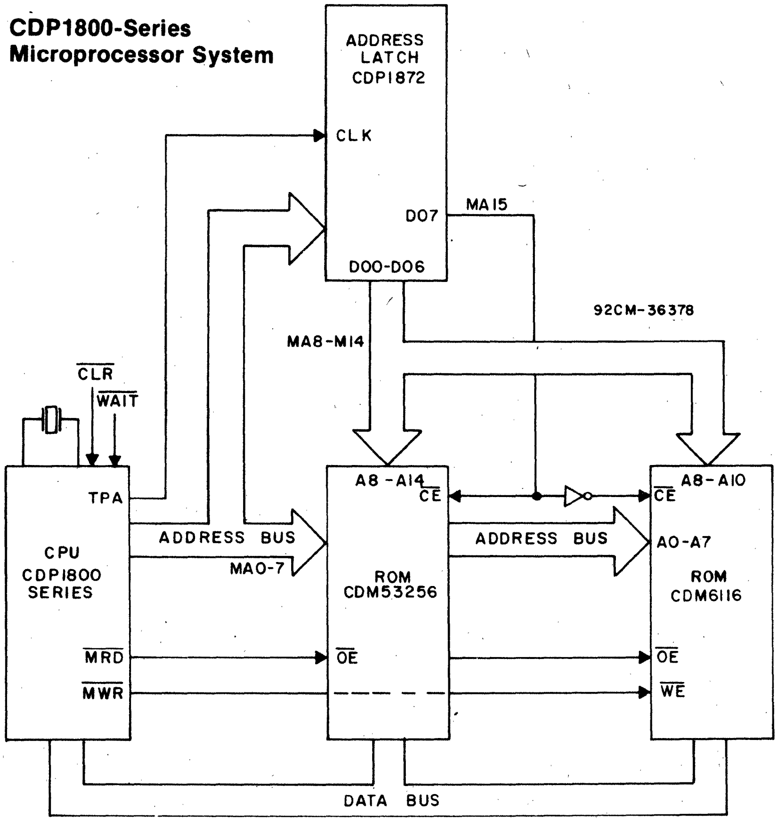
ADDRESS LATCH CDP1872
CLK
D07
MA15
D00-D06
92CM-36378
MA8-M14
CLR
WAIT
TPA
CPU CDP1800 SERIES
ADDRESS BUS
MA0-7
A8-A14
CE
ROM CDM53256
ADDRESS BUS
A8-A10
CE
A0-A7
ROM CDM6116
MRD
MWR
OE
OE
WE
DATA BUS

CDP1800-series microprocessor system using the CDP1872 with a CDM53256 ROM. The CDP1872 address latch provides the memory high-order address and chip-enable signals.

CDP6805E2 Microprocessor Based System

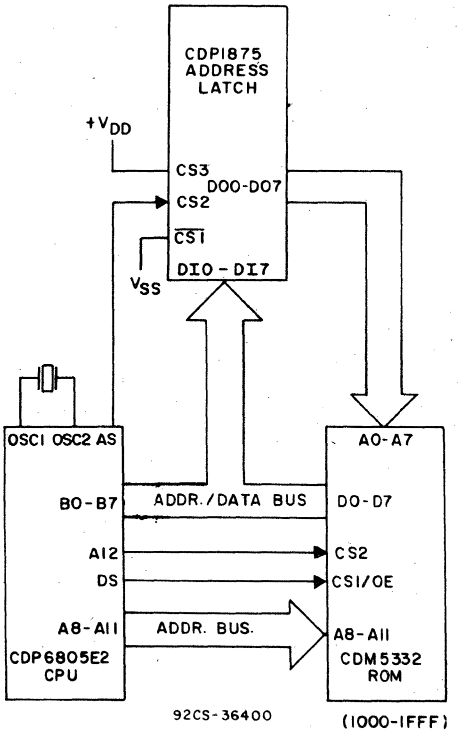
CDP1875 ADDRESS LATCH
+V$_{DD}$
CS3
D00-D07
CS2
CS1
V$_{SS}$
DI0-DI7
OSC1 OSC2 AS
B0-B7
ADDR./DATA BUS
A12
DS
A8-A11
ADDR. BUS.
CDP6805E2 CPU
A0-A7
D0-D7
CS2
CS1/OE
A8-A11
CDM5332 ROM
92CS-36400
(1000-1FFF)

CDP6805E2 microprocessor based system using the CDP1875 8-bit address latch and CDM5332 ROM. The multiplexed low-order address byte of the CDP6805E2 is strobed into the latch by address strobe (AS). The CDP6805E2 microprocessor has 112 bytes of on-chip RAM, and is capable of addressing up to 8K bytes of external memory.

RCA CMOS Peripherals

Can be used with CMOS and NMOS Processors

		MICROPROCESSOR BUS							
			MULTIPLEXED			NON-MULTIPLEXED			
			MOTEL BUS						
		RCA	MOTOROLA	INTEL	NSC800	Z80	6500		
RCA I/O TYPE	DESCRIPTION AND FUNCTION	1802A 1804A	6805	8048 8051 80C48 80C51 8049 8085 80C49 80C85 8088	NSC800	Z80	6502 65C02	INPUT LEVELS	FANOUT$_2$ (TTL LOADS)
I/O PORTS									
CDP1851	PROGRAMMABLE I/O PORT	YES	NOTE 1	NOTE 1	NOTE 1	YES	YES	CMOS	1
CDP1852	BYTE-WIDE I/O PORT	YES	YES	YES	YES	YES	YES	CMOS	1
CDP1872	8-BIT INPUT PORT	YES	YES	YES	YES	YES	YES	CMOS	3
CDP1874	8-BIT INPUT PORT	YES	YES	YES	YES	YES	YES	CMOS	3
CDP1875	8-BIT INPUT PORT	YES	YES	YES	YES	YES	YES	CMOS	3
CDP6823	PARALLEL INTERFACE (MOTEL BUS)	NO	YES	YES	YES	NO	NO	CMOS	1
MEMORY I/O DECODERS									
CDP1853	N-BIT 1 OF 8 DECODER	YES	YES	YES	YES	YES	YES	CMOS	1
CDP1858	4-BIT LATCH/DECODER	YES	YES	YES	YES	YES	YES	CMOS	1
CDP1859	4-BIT LATCH/DECODER	YES	YES	YES	YES	YES	YES	CMOS	1
CDP1866	4-BIT LATCH/DECODER	YES	YES	YES	YES	YES	YES	CMOS	1
CDP1867	4-BIT LATCH/DECODER	YES	YES	YES	YES	YES	YES	CMOS	1
CDP1868	4-BIT LATCH/DECODER	YES	YES	YES	YES	YES	YES	CMOS	1
CDP1873	1 OF 8 BINARY DECODER	YES	YES	YES	YES	YES	YES	CMOS	3
CDP1881	6-BIT LATCH/DECODER	YES	YES	YES	YES	YES	YES	CMOS	1
CDP1882	6-BIT LATCH/DECODER	YES	YES	YES	YES	YES	YES	CMOS	1
CDP1883	7-BIT LATCH/DECODER	YES	YES	YES	YES	YES	YES	CMOS	1
SERIAL I/O									
CDP1854A	UART	YES	YES	YES	YES	YES	YES	CMOS	1
CDP6402	UART	YES	YES	YES	YES	YES	YES	CMOS	1
CDP65C51	UART (WITH BAUD RATE GEN.)	YES	USE 6853	USE 6853	USE 6853	YES	YES	TTL	1
CDP6853	UART (MOTEL BUS), WITH BAUD RATE GEN.	USE 65C51	YES	YES	YES	USE 65C51	USE 65C51	TTL	1
MULTIPLY/ DIVIDE									
CDP1855	8-BIT PROGRAMMABLE MDU	YES	NOTE 1	NOTE 1	NOTE 1	NOTE 1	NOTE 1	CMOS	1
BUFFERS									
CDP1856	4-BIT BUS BUFFER SEPARATOR	YES	YES	YES	YES	YES	YES	CMOS	1
CDP1857	4-BIT BUS BUFFER SEPARATOR	YES	YES	YES	YES	YES	YES	CMOS	1
VIDEO CONTROL									
CDP1869	VIDEO INTERFACE SYSTEM (VIS)	YES	NO	NO	NO	NO	NO	CMOS	
CDP1870	VIDEO INTERFACE SYSTEM (VIS)	YES	NO	NO	NO	NO	NO	CMOS	
CDP1876	VIDEO INTERFACE SYSTEM (VIS)	YES	NO	NO	NO	NO	NO	CMOS	
KEYBOARD INTERFACE									
CDP1871A	KEYBOARD ENCODER	YES	YES	YES	YES	YES	YES	CMOS	
TIMER FUNCTIONS									
CDP1863	8-BIT PROG. FREQ. GEN.	YES	YES	YES	YES	YES	YES	CMOS	1
CDP1878	DUAL COUNTER-TIMER	YES	USE 6848	USE 6848	USE 6848	YES	YES	CMOS	1
CDP1879	REAL TIME CLOCK	YES	USE 6818	USE 6818	USE 6818	YES	YES	CMOS	1
CDP6818	REAL TIME CLOCK/RAM (MOTEL BUS)	NOTE 1	YES	YES	YES	NOTE 1	NOTE 1	CMOS	1
CDP6848	DUAL COUNTER-TIMER	USE 1878	YES	YES	YES	USE 1878	USE 1878	CMOS	1
CDP68HC68T1	SERIAL REAL-TIME CLOCK/RAM	YES	YES	YES	YES	YES	YES	CMOS	1
A/D CONVERTER									
CDP68HC68A1	SERIAL 8-CHANNEL A/D CONVERTER	YES	YES	YES	YES	YES	YES	CMOS	1
INTERRUPT CONTROL									
CDP1877	PROGRAMMABLE INTERRUPT CONTROLLER (PIC)	YES	NO	NO	NO	NO	NO	CMOS	1

NOTES: 1. Yes but requires additional "glue parts". 2. 1 TTL load, I.E. ≤ 0.4V at 1.6mA.

WHAT'S NEW IN IC Updates

IF YOU NEED THE IC MASTER YOU NEED THE IC UPDATES

Not only will the IC UPDATES update your IC Master Catalog they will provide valuable IC application and selection information in every issue.

SPRING, SUMMER and FALL

and remember our toll free number for up-to-date product information: **800 443-0100 (EXT.) 518**

Signetics

MICROPROCESSOR/ MICROCONTROLLER Products

Data Communications

SCN2641
SCN2651
SCN2652/SCN68652
SCN2653/SCN68653
SCN2661/SCN68661
SCN2681
SCC2691
SCC2698

Microcontrollers

SCC80 Series
SCN80 Series
SCN8031AH/SCN8051AH
SCC80C31/SCC80C51
SCC84C Series
8X300 Family
8X360
8X400 Family

Microprocessors

SCN68000
SCN68010
SCB68430
SCN68454
SCB68459
SCN68562
SCN68681
SCC68905
SCB68154
SCB68155
SCB68175
SCC68906
SCB68172

CRT/Display

SCB2675T
SCN2672
SCB2673
SCN2674
SCB2675
SCB2677

signetics
a subsidiary of U.S. Philips Corporation

Signetics Corporation
811 E. Arques Avenue
P.O. Box 3409
Sunnyvale, California 94088-3409
Telephone 408/991-3604

Signetics

SCN2641
Asynchronous Communications Interface

Product Specification

Microprocessor Products

DESCRIPTION

The Signetics SCN2641 is a universal asynchronous data communications controller chip that interfaces directly to most 8-bit microprocessors and may be used in a polled or interrupt-driven system environment. The SCN2641 accepts programmed instructions from the microprocessor while supporting asynchronous serial data communications in full- or half-duplex mode.

The SCN2641 serializes parallel data characters received from the microprocessor for transmission. Simultaneously, it can receive serial data and convert it into parallel data characters for input to the microcomputer.

The SCN2641 contains a baud rate generator which can be programmed to either accept an external clock or to generate internal transmit or receive clocks. Sixteen different baud rates can be selected under program control when operating in the internal clock mode.

The SCN2641 is constructed using Signetics n-channel silicon gate depletion load technology and is packaged in a 24-pin DIP.

FEATURES

- **5- to 8-bit characters plus parity**
- **1, 1½ or 2 stop bits transmitted**
- **Odd, even or no parity**
- **Parity, overrun and framing error detection**
- **Line break detection and generation**
- **False start bit detection**
- **Automatic serial echo mode (echoplex)**
- **Local or remote maintenance loopback mode**
- **Baud rate:**
  - **DC to 1M bps (1X clock)**
  - **DC to 62.5K bps (16X clock)**
  - **DC to 15.625K bps (64X clock)**
- **Internal or external baud rate clock**
- **16 internal rates**
- **Double-buffered transmitter and receiver**
- **Single +5V power supply**
- **400 mil package width**

APPLICATIONS

- **Intelligent terminals**
- **Network processors**
- **Front-end processors**
- **Remote data concentrators**
- **Serial peripherals**

PIN CONFIGURATION

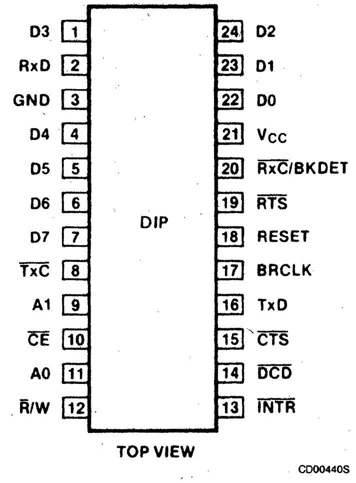

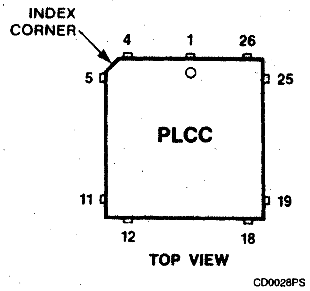

Pin	Function	Pin	Function
1	D2	15	$\overline{INTR}$
2	D3	16	$\overline{DCD}$
3	RxD	17	$\overline{CTS}$
4	GND	18	NC
5	D4	19	TxD
6	D5	20	BRCLK
7	D6	21	RESET
8	NC	22	NC
9	D7	23	$\overline{RTS}$
10	$\overline{TxC}$	24	NC
11	A1	25	$\overline{RxC}$/BKDET
12	$\overline{CE}$	26	V_{CC}
13	A0	27	D0
14	$\overline{R}$/W	28	D1

Asynchronous Communications Interface SCN2641

ORDERING CODE

PACKAGES	$V_{CC} = 5V \pm 5\%$, $T_A = 0°C$ to $70°C$
Plastic DIP	SCN2641CC1N24
Plastic LCC	SCN2641CC1A28

BLOCK DIAGRAM

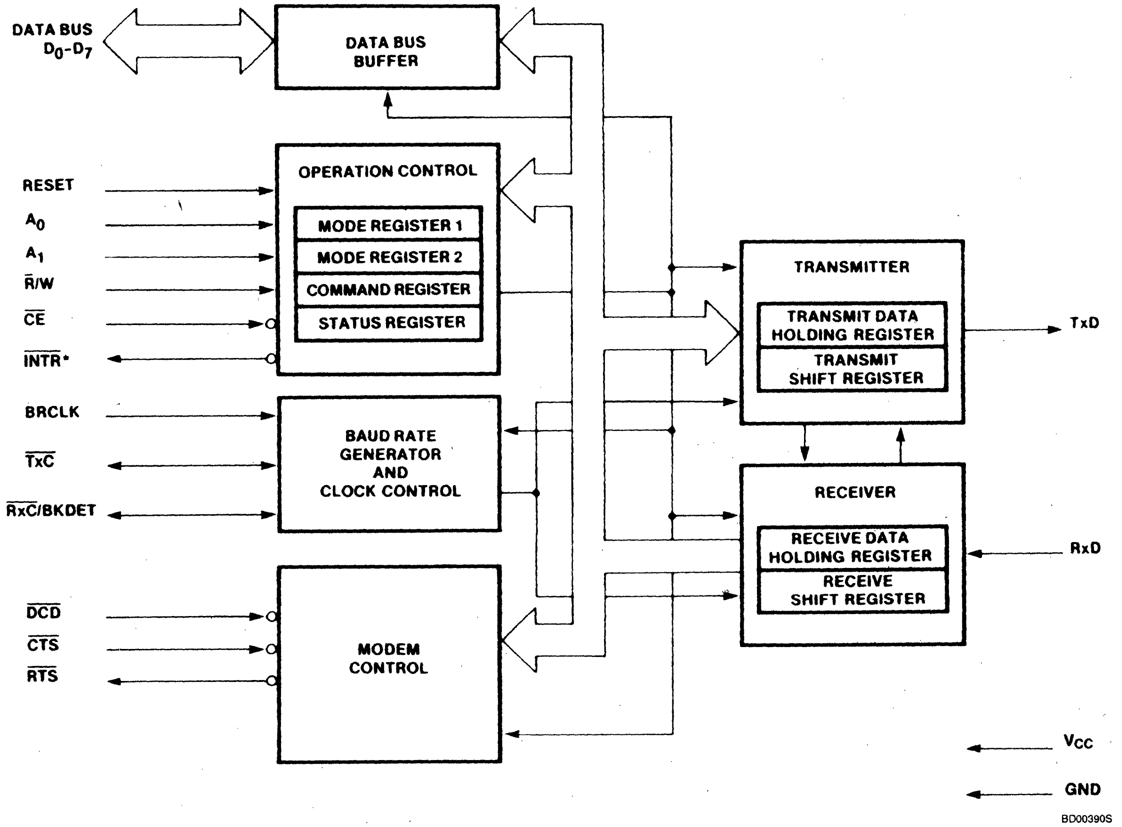
DATA BUS
D_0-D_7
DATA BUS BUFFER
OPERATION CONTROL
MODE REGISTER 1
MODE REGISTER 2
COMMAND REGISTER
STATUS REGISTER
RESET
A_0
A_1
$\overline{R}/W$
$\overline{CE}$
$\overline{INTR}$*
BRCLK
$\overline{TxC}$
$\overline{RxC}$/BKDET
BAUD RATE GENERATOR AND CLOCK CONTROL
$\overline{DCD}$
$\overline{CTS}$
$\overline{RTS}$
MODEM CONTROL
TRANSMITTER
TRANSMIT DATA HOLDING REGISTER
TRANSMIT SHIFT REGISTER
TxD
RECEIVER
RECEIVE DATA HOLDING REGISTER
RECEIVE SHIFT REGISTER
RxD
V_{CC}
GND
BD00390S

*Open drain output pin

Signetics

SCN2651
Programmable Communications Interface (PCI)

Microprocessor Products

Product Specification

DESCRIPTION

The Signetics SCN2651 PCI is a universal synchronous/asynchronous data communications controller chip designed for microcomputer systems. It interfaces directly to the Signetics SCN2650 microprocessor and may be used in a polled or interrupt driven system environment. The SCN2651 accepts programmed instructions from the microprocessor and supports many serial data communication disciplines, synchronous and asynchronous, in the full or half-duplex mode.

The PCI serializes parallel data characters received from the microprocessor for transmission. Simultaneously, it can receive serial data and convert it into parallel data characters for input to the microcomputer.

The SCN2651 contains a baud rate generator which can be programmed to either accept an external clock or to generate internal transmit or receive clocks. Sixteen different baud rates can be selected under program control when operating in the internal clock mode.

The PCI is constructed using Signetics n-channel silicon gate depletion load technology and is packaged in a 28-pin DIP.

FEATURES

- **Synchronous operation**
  - **5- to 8-bit characters**
  - **Single or double SYN operation**
  - **Internal character synchronization**
  - **Transparent or non-transparent mode**
  - **Automatic SYN or DLE - SYN insertion**
  - **SYN or DLE stripping**
  - **Odd, even, or no parity**
  - **Local or remote maintenance loopback mode**
  - **Baud rate: dc to 1M bps (1X clock)**
- **Asynchronous operation**
  - **5- to 8-bit characters**
  - **1, 1 1/2 or 2 stop bits**
  - **Odd, even, or no parity**
  - **Parity, overrun and framing error detection**
  - **Line break detection and generation**
  - **False start bit detection**
  - **Automatic serial echo mode**
  - **Local or remote maintenance loopback mode**
  - **Baud rate: dc to 1M bps (1X clock) dc to 62.5K bps (16X clock) dc to 15.625K bps (64X clock)**

OTHER FEATURES

- **Internal or external baud rate clock**
- **16 Internal rates - 50 to 19,200 baud**
- **Double buffered transmitter and receiver**
- **Full or half duplex operation**
- **TTL compatible inputs and outputs**
- **Single 5V power supply**
- **No system clock required**
- **28-pin dual in-line package**

APPLICATIONS

- **Intelligent terminals**
- **Network processors**
- **Front-end processors**
- **Remote data concentrators**
- **Computer to computer links**
- **Serial peripherals**

PIN CONFIGURATION

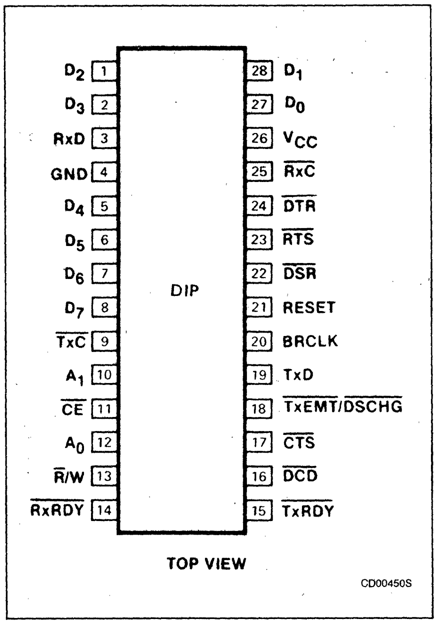
D2 1
D3 2
RxD 3
GND 4
D4 5
D5 6
D6 7
D7 8
$\overline{TxC}$ 9
A1 10
$\overline{CE}$ 11
A0 12
R/$\overline{W}$ 13
$\overline{RxRDY}$ 14
28 D1
27 D0
26 VCC
25 $\overline{RxC}$
24 $\overline{DTR}$
23 $\overline{RTS}$
22 $\overline{DSR}$
21 RESET
20 BRCLK
19 TxD
18 $\overline{TxEMT/DSCHG}$
17 $\overline{CTS}$
16 $\overline{DCD}$
15 $\overline{TxRDY}$
DIP
TOP VIEW
CD00450S

February 20, 1985
853–0082–77351

Programmable Communications Interface (PCI) SCN2651

ORDERING CODE

PACKAGES	V_{CC} = 5V±5%		
	Commercial	**Automotive**	**Military**
	0°C to +70°C	**-40°C to + 85°C**	**-55°C to +125°C**
Ceramic DIP	SCN2651CC1I28	SCN2651CA1I28	SCN2651CM1I28
Plastic DIP	SCN2651CC1N28	Contact Factory	Not available

BLOCK DIAGRAM

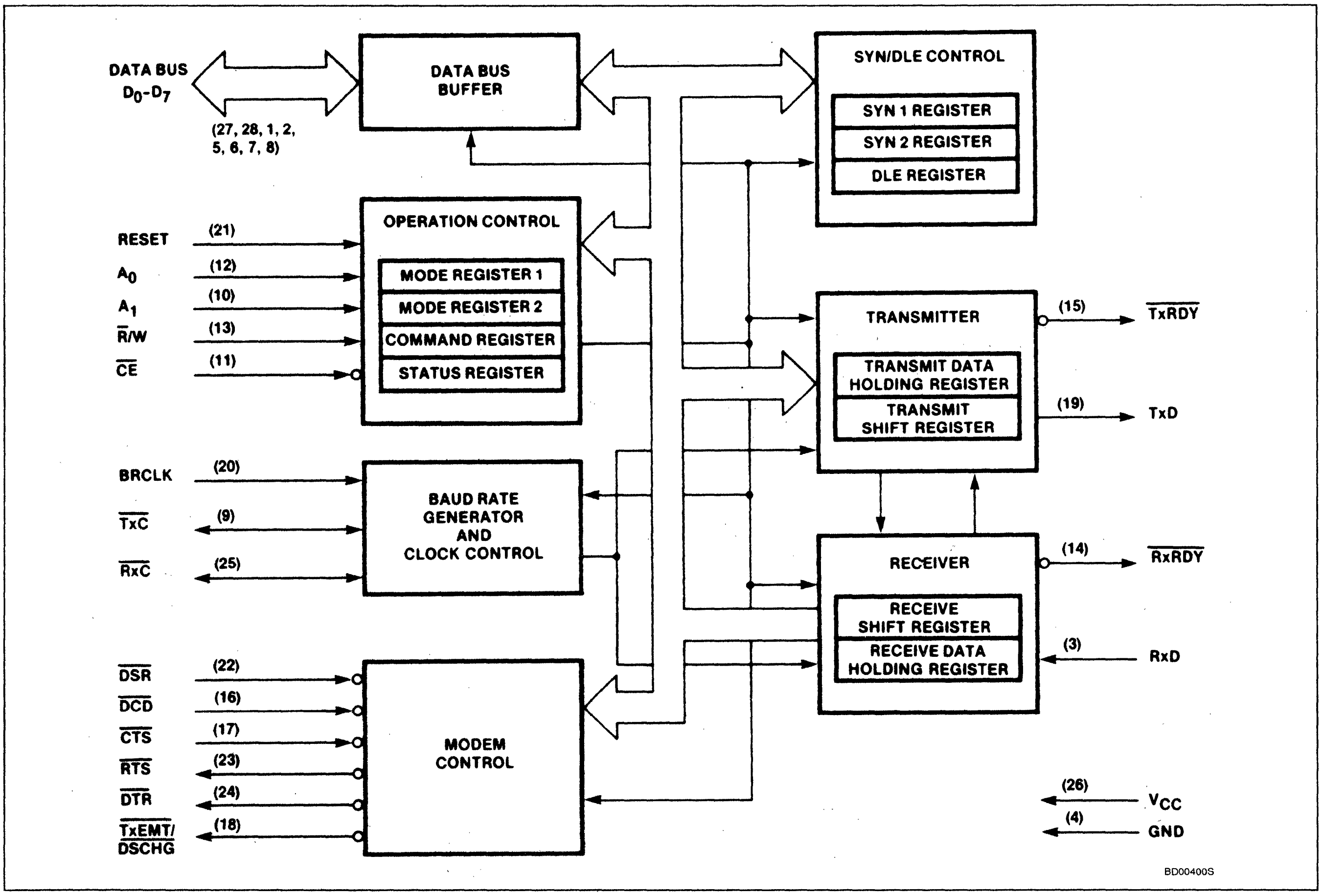
DATA BUS
D0-D7
(27, 28, 1, 2, 5, 6, 7, 8)
DATA BUS BUFFER
RESET (21)
A0 (12)
A1 (10)
R/W (13)
CE (11)
OPERATION CONTROL
MODE REGISTER 1
MODE REGISTER 2
COMMAND REGISTER
STATUS REGISTER
BRCLK (20)
TxC (9)
RxC (25)
BAUD RATE GENERATOR AND CLOCK CONTROL
DSR (22)
DCD (16)
CTS (17)
RTS (23)
DTR (24)
TxEMT/DSCHG (18)
MODEM CONTROL
SYN/DLE CONTROL
SYN 1 REGISTER
SYN 2 REGISTER
DLE REGISTER
TRANSMITTER
TRANSMIT DATA HOLDING REGISTER
TRANSMIT SHIFT REGISTER
(15) TxRDY
(19) TxD
RECEIVER
RECEIVE SHIFT REGISTER
RECEIVE DATA HOLDING REGISTER
(14) RxRDY
(3) RxD
(26) VCC
(4) GND
BD00400S

February 20, 1985

Signetics

SCN2652/SCN68652
Multi-Protocol Communications Controller (MPCC)

Product Specification

Microprocessor Products

DESCRIPTION

The SCN2652/68652 Multi-Protocol Communications Controller (MPCC) is a monolithic n-channel MOS LSI circuit that formats, transmits and receives synchronous serial data while supporting bit-oriented or byte control protocols. The chip is TTL compatible, operates from a single +5V supply, and can interface to a processor with an 8 or 16-bit bidirectional data bus.

FEATURES

- DC to 1Mbps or 2Mbps data rate
- Bit-oriented protocols (BOP): SDLC, ADCCP, HDLC
- Byte-control protocols (BCP): DDCMP, BISYNC (external CRC)
- Programmable operation
  - 8 or 16-bit tri-state data bus
  - Error control - CRC or VRC or none
  - Character length - 1 to 8 bits for BOP or 5 to 8 bits for BCP
  - SYNC or secondary station address comparison for BCP-BOP
  - Idle transmission of SYNC/FLAG or MARK for BCP-BOP
- Automatic detection and generation of special BOP control sequences, i.e., FLAG, ABORT, GA
- Zero insertion and deletion for BOP
- Short character detection for last BOP data character
- SYNC generation, detection, and stripping for BCP
- Maintenance mode for self-testing
- TTL compatible
- Single +5V supply

APPLICATIONS

- Intelligent terminals
- Line controllers
- Network processors
- Front end communications
- Remote data concentrators
- Communication test equipment
- Computer to computer links

PIN CONFIGURATION

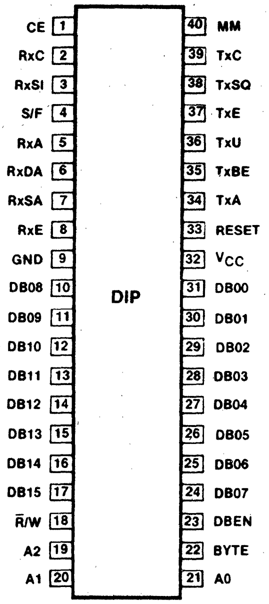
CE 1
RxC 2
RxSI 3
S/F 4
RxA 5
RxDA 6
RxSA 7
RxE 8
GND 9
DB08 10
DB09 11
DB10 12
DB11 13
DB12 14
DB13 15
DB14 16
DB15 17
R̄/W 18
A2 19
A1 20
40 MM
39 TxC
38 TxSQ
37 TxE
36 TxU
35 TxBE
34 TxA
33 RESET
32 V_{CC}
31 DB00
30 DB01
29 DB02
28 DB03
27 DB04
26 DB05
25 DB06
24 DB07
23 DBEN
22 BYTE
21 A0
DIP

TOP VIEW

CD00160S

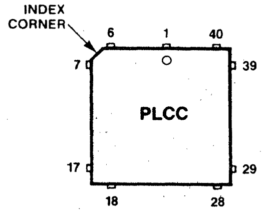
INDEX CORNER
6
1
40
7
39
PLCC
17
29
18
28

TOP VIEW

CD0044PS

Pin	Function	Pin	Function
1	NC	23	NC
2	CE	24	A0
3	RxC	25	BYTE
4	RxSI	26	DBEN
5	S/F	27	DB07
6	RxA	28	DB06
7	RxDA	29	DB05
8	RxSA	30	DB04
9	RxE	31	DB03
10	GND	32	DB02
12	NC	33	DB01
11	DB08	34	NC
13	DB09	35	DB00
14	DB10	36	V_{CC}
15	DB11	37	RESET
16	DB12	38	TxA
17	DB13	39	TxBE
18	DB14	40	TxU
19	DB15	41	TxE
20	R̄/W	42	TxSQ
21	A2	43	TxC
22	A1	44	MM

NOTE: 00 is least significant bit, highest number (that is, DB15, A2) is most significant bit.

Multi-Protocol Communications Controller (MPCC) SCN2652/SCN68652

ORDERING CODE

PACKAGES		V_{CC} = 5V±5%		
		Commercial	Automotive	Extended
		0°C to +70°C	-40°C to +85°C	-55°C to +125°C
Ceramic DIP	1MHz	SCN2652AC1I40	SCN2652AA1I40	SCN2652AM1I40
	2MHz	SCN2652AC2I40	SCN2652AA2I40	SCN2652AM2I40
Plastic DIP	1MHz	SCN2652AC1N40	Contact Factory	Not Available
	2MHz	SCN2652AC2N40	Contact Factory	Not Available
Plastic LCC	1MHz	SCN2652AC1A44	Contact Factory	Not Available
	2MHz	SCN2652AC2A44	Contact Factory	Not Available

NOTE:
SCN68652 is identical to SCN2652. Order using part numbers shown above.

BLOCK DIAGRAM

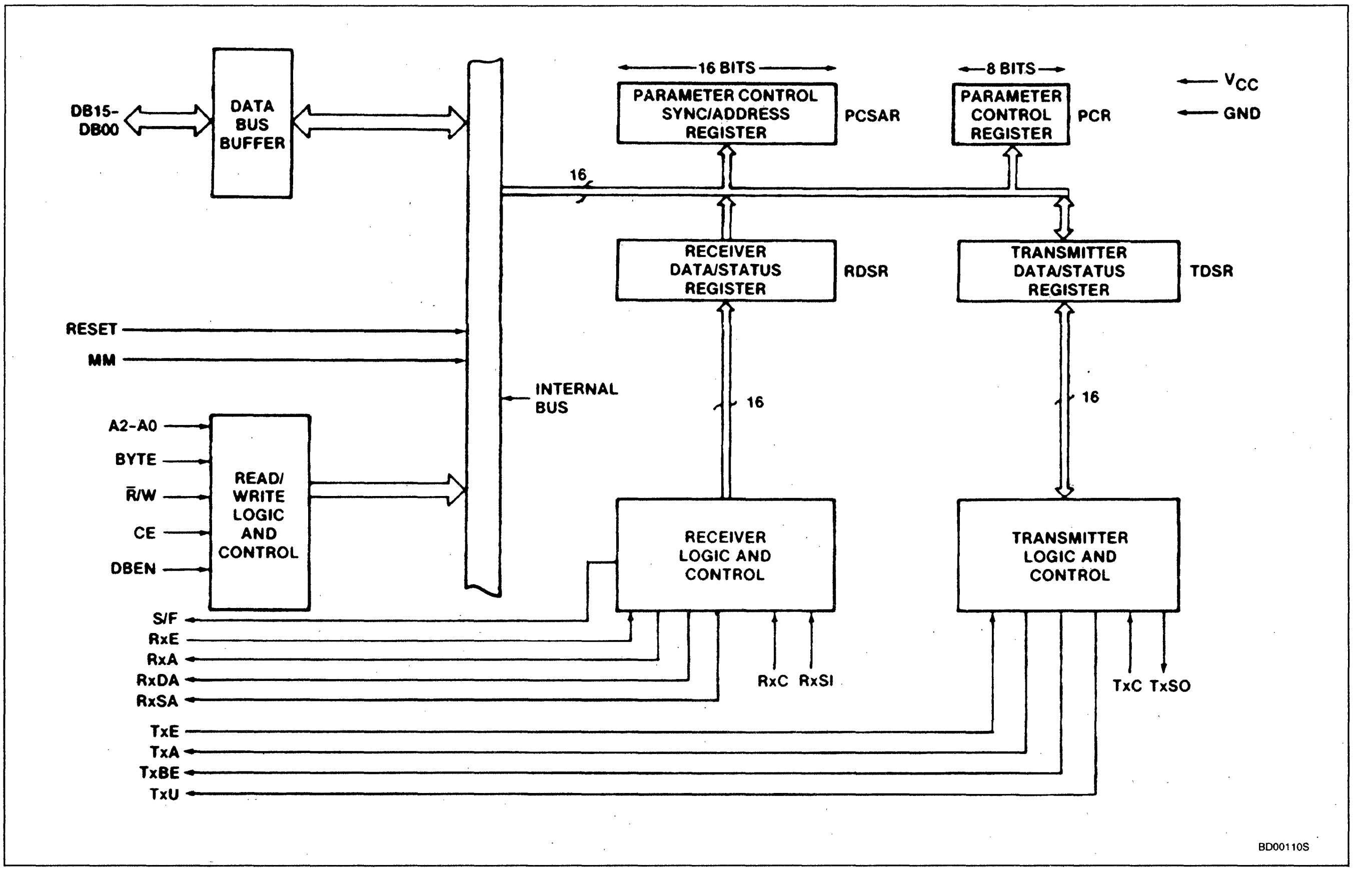
DB15-DB00
DATA BUS BUFFER
16 BITS
PARAMETER CONTROL SYNC/ADDRESS REGISTER
PCSAR
8 BITS
PARAMETER CONTROL REGISTER
PCR
VCC
GND
16
RECEIVER DATA/STATUS REGISTER
RDSR
TRANSMITTER DATA/STATUS REGISTER
TDSR
RESET
MM
INTERNAL BUS
16
16
A2-A0
BYTE
R̅/W
CE
DBEN
READ/ WRITE LOGIC AND CONTROL
RECEIVER LOGIC AND CONTROL
TRANSMITTER LOGIC AND CONTROL
S/F
RxE
RxA
RxDA
RxSA
RxC RxSI
TxC TxSO
TxE
TxA
TxBE
TxU
BD00110S

Signetics

SCN2653/SCN68653
Polynomial Generator Checker (PGC)

Product Specification

Microprocessor Products

DESCRIPTION

The Signetics SCN2653/68653 Polynomial Generator Checker (PGC) is a polynomial generator checker/character comparator circuit that complements a receiver/transmitter (R/T or USART/USRT/UART) in the support of character oriented data link controls. Table 1 defines many of the more commonly used PGC terms and abbreviations.

Parallel data characters transferred between the CPU and R/T are monitored by the PGC which performs block check character (BCC) and parity (VRC) generation/checking, single character detection, and two character sequence detection. Since the PGC operates on parallel characters, the data transmission format may be serial (synchronous or asynchronous) or parallel.

There are four modes of BCC accumulation and each mode can select one of three polynomials to compute the BCC. In the BISYNC normal and transparent modes, the PGC determines which characters are to be accumulated and which characters are to be excluded from the accumulation. The block terminating characters and the initiation and termination of BISYNC transparent text can be detected and an interrupt generated. The single interrupt output represents the inclusive OR of four maskable status conditions.

In the automatic accumulation mode, all characters are accumulated while the single accumulate mode requires a specific accumulation command for each character to be accumulated.

Character accumulation control and character comparisons are facilitated by a character class array which places each of 128 characters into one of four character classes. The four classes are normal, SYN/BISYNC not included, block terminating character (BTC)/search character (SC), and secondary search character (SSC).

FEATURES

- **Parallel Block Check Character accumulation/checking: CRC-16, CRC-12, LRC-8**
- **BISYNC normal and transparent modes**
- **Automatic or single character accumulation modes**
- **Character detection - up to 128 characters**
- **Two character sequence detection; examples: DLE-STX, ACK0, ACK1, WACK, RVI, DISC, WBT**
- **6, 7, or 8-bit characters**
- **VRC generation/checking on data bus**
- **Four maskable interrupt conditions**
- **Four classes of characters**
- **Internal power-on reset**
- **Maximum character accumulation rate of 500kHz (4Mbps)**
- **Directly compatible with Signetics SCN2651, SCN2652 and SCN2661**
- **No system clock required**
- **TTL compatible inputs and outputs**
- **Single 5V supply**
- **16-pin dual in line package**

APPLICATIONS

- **Character oriented data link control:**
  - **dedicated to one USART/USRT**
  - **multiplexed among several USART/USRTs**
- **Automated BISYNC with 2661 (minimal software intervention)**
- **BCC and VRC generation/detection on a block of memory or peripheral data**
- **Programmable character array comparator**

PIN CONFIGURATION

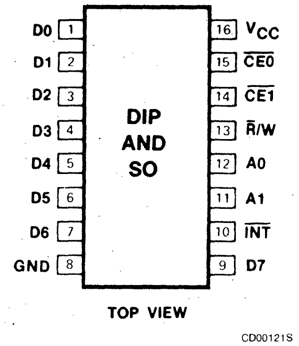

(SO = 300MIL BODY WIDTH)

Polynomial Generator Checker (PGC)

SCN2653/SCN68653

ORDERING CODE

PACKAGES	$V_{CC} = 5V \pm 5\%$, $T_A = 0°C$ to $+70°C$
Ceramic DIP	SCN2653AC4I16
Plastic DIP	SCN2653AC4N16
Small Outline (SO)	SCN2653ACD16

NOTE:
SCN68653 is identical to SCN2653. Order using numbers shown above.

BLOCK DIAGRAM

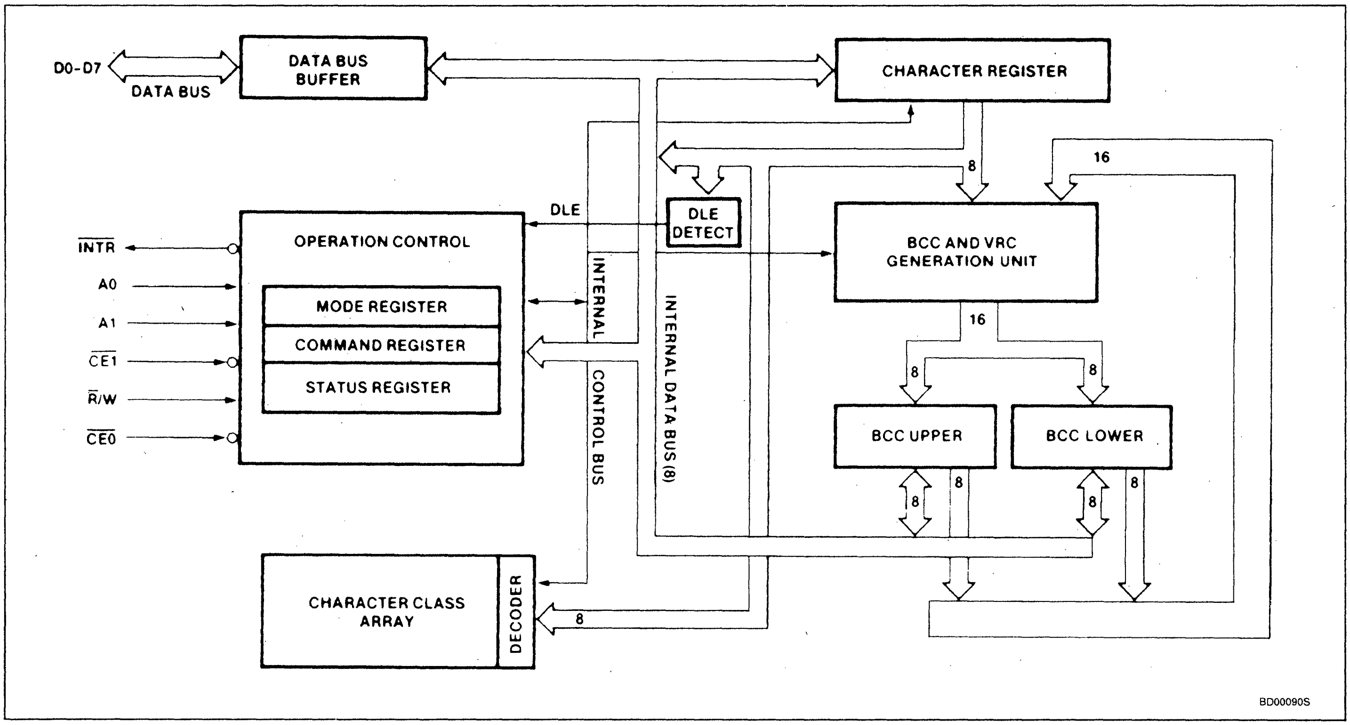
D0-D7
DATA BUS
DATA BUS BUFFER
CHARACTER REGISTER
8
16
DLE
DLE DETECT
BCC AND VRC GENERATION UNIT
INTR
A0
A1
CE1
R/W
CE0
OPERATION CONTROL
MODE REGISTER
COMMAND REGISTER
STATUS REGISTER
INTERNAL CONTROL BUS
INTERNAL DATA BUS (8)
16
8
8
BCC UPPER
BCC LOWER
8
8
8
8
CHARACTER CLASS ARRAY
DECODER
8
BD00090S

Signetics

Microprocessor Products

SCN2661/SCN68661
Enhanced Programmable Communications Interface (EPCI)

Product Specification

DESCRIPTION

The Signetics SCN2661 EPCI is a universal synchronous/asynchronous data communications controller chip that is an enhanced version of the SCN2651. It interfaces easily to all 8-bit and 16-bit microprocessors and may be used in a polled or interrupt driven system environment. The SCN2661 accepts programmed instructions from the microprocessor while supporting many serial data communications disciplines – synchronous and asynchronous – in the full or half-duplex mode. Special support for BISYNC is provided.

The EPCI serializes parallel data characters received from the microprocessor for transmission. Simultaneously, it can receive serial data and convert it into parallel data characters for input to the microcomputer.

The SCN2661 contains a baud rate generator which can be programmed to either accept an external clock or to generate internal transmit or receive clocks. Sixteen different baud rates can be selected under program control when operating in the internal clock mode. Each version of the EPCI (A, B, C) has a different set of baud rates.

FEATURES

- **Synchronous operation**
  - **5- to 8-bit characters plus parity**
  - **Single or double SYN operation**
  - **Internal or external character synchronization**
  - **Transparent or non-transparent mode**
  - **Transparent mode DLE stuffing (Tx) and detection (Rx)**
  - **Automatic SYN or DLE-SYN insertion SYN, DLE and DLE-SYN stripping**
  - **Odd, even, or no parity**
  - **Local or remote maintenance loopback mode**
  - **Baud rate: dc to 1M bps (1X clock)**
- **Asynchronous operation**
  - **5- to 8-bit characters plus parity**
  - **1, 1½ or 2 stop bits transmitted**
  - **Odd, even, or no parity**
  - **Parity, overrun and framing error detection**
  - **Line break detection and generation**
  - **False start bit detection**
  - **Automatic serial echo mode (echoplex)**
  - **Local or remote maintenance loopback mode**
  - **Baud rate: dc to 1M bps (1X clock) dc to 62.5K bps (16X clock) dc to 15.625K bps (64X clock)**

OTHER FEATURES

- **Internal or external baud rate clock**
- **3 baud rate sets**
- **16 internal rates for each set**
- **Double buffered transmitter and receiver**
- **Dynamic character length switching**
- **Full or half-duplex operation**
- **TTL compatible inputs and outputs**
- **RxC and TxC pins are short circuit protected**
- **Single 5V power supply**
- **No system clock required**

APPLICATIONS

- **Intelligent terminals**
- **Network processors**
- **Front-end processors**
- **Remote data concentrators**
- **Computer-to-computer links**
- **Serial peripherals**
- **BISYNC adaptors**

PIN CONFIGURATION

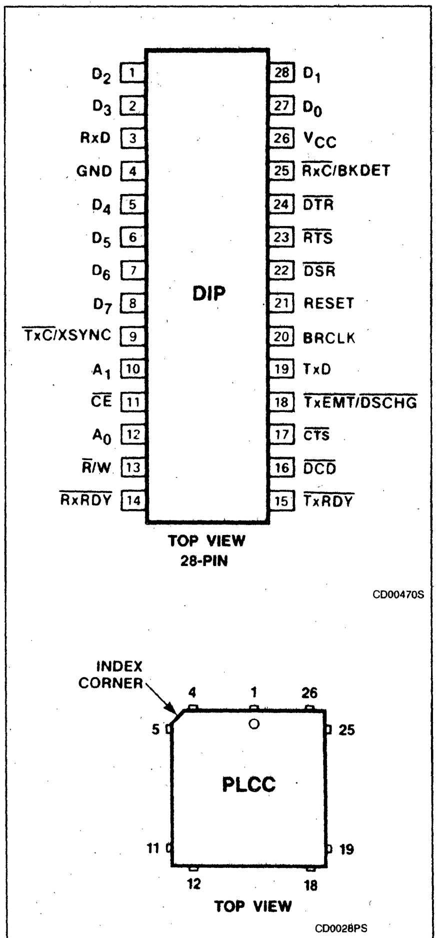

NOTE:
Pin Functions the same as 28-pin DIP.

Enhanced Programmable Communications Interface (EPCI)

SCN2661/SCN68661

ORDERING CODE

PACKAGES	V_{CC} = 5V ±5%		
	Commercial	Automotive	Military
	0°C to +70°C	-40°C to +85°C	-55°C to +125°C
Ceramic DIP 28-Pin 0.6" Wide	SCN2661AC1I28 SCN2661BC1I28 SCN2661CC1I28	SCN2661AA1I28 SCN2661BA1I28 SCN2661CA1I28	SCN2661AM1I28 SCN2661BM1I28 SCN2661CM1I28
Plastic DIP 28-Pin 0.6" Wide	SCN2661AC1N28 SCN2661BC1N28 SCN2661CC1N28	Contact Factory	Not Available
Plastic LCC	SCN2661AC1A28 SCN2661BC1A28 SCN2661CC1A28	Contact Factory	Not Available

NOTES:
1. See table 1 for baud rates. Specify SCN2661A, B, or C depending on baud rate selected.
2. The SCN68661 is identical to the SCN2661. Order using part numbers above.

BLOCK DIAGRAM

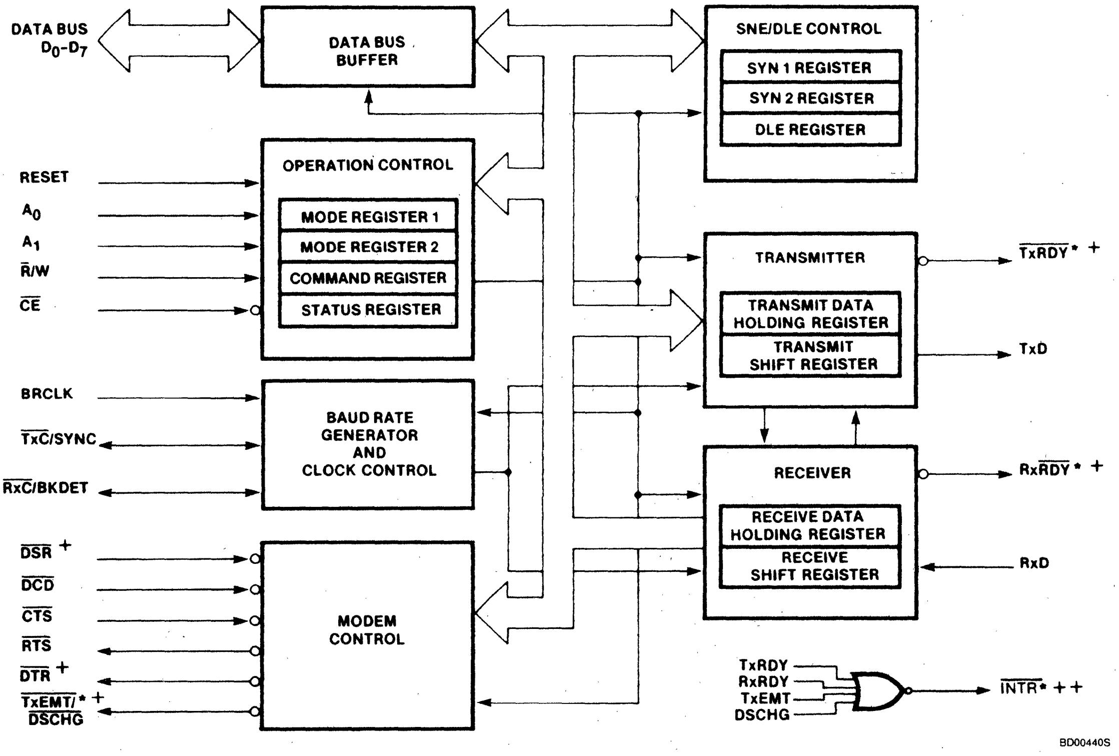
DATA BUS
D_0-D_7
DATA BUS BUFFER
SNE/DLE CONTROL
SYN 1 REGISTER
SYN 2 REGISTER
DLE REGISTER
RESET
A_0
A_1
R/W
CE
OPERATION CONTROL
MODE REGISTER 1
MODE REGISTER 2
COMMAND REGISTER
STATUS REGISTER
TRANSMITTER
TRANSMIT DATA HOLDING REGISTER
TRANSMIT SHIFT REGISTER
TxRDY* +
TxD
BRCLK
TxC/SYNC
RxC/BKDET
BAUD RATE GENERATOR AND CLOCK CONTROL
RECEIVER
RECEIVE DATA HOLDING REGISTER
RECEIVE SHIFT REGISTER
RxRDY* +
RxD
DSR +
DCD
CTS
RTS
DTR +
TxEMT/* + DSCHG
MODEM CONTROL
TxRDY
RxRDY
TxEMT
DSCHG
INTR* ++
BD00440S

NOTES:
* Open drain output pin.
+ 28-pin only.
+ + 24-pin only.

SCN2681
Dual Asynchronous Receiver/Transmitter (DUART)

Product Specification

Microprocessor Products

DESCRIPTION

The Signetics SCN2681 Dual Universal Asynchronous Receiver/Transmitter (DUART) is a single chip MOS-LSI communications device that provides two independent full-duplex asynchronous receiver/transmitter channels in a single package. It interfaces directly with microprocessors and may be used in a polled or interrupt driven system.

The operating mode and data format of each channel can be programmed independently. Additionally, each receiver and transmitter can select its operating speed as one of eighteen fixed baud rates, a 16x clock derived from a programmable counter/timer, or an external 1x or 16x clock. The baud rate generator and counter/timer can operate directly from a crystal or from external clock inputs. The ability to independently program the operating speed of the receiver and transmitter make the DUART particularly attractive for dual-speed channel applications such as clustered terminal systems.

Each receiver is quadruply buffered to minimize the potential of receiver overrun or to reduce interrupt overhead in interrupt driven systems. In addition, a flow control capability is provided to disable a remote DUART transmitter when the buffer of the receiving device is full.

FEATURES

- **Dual full-duplex asynchronous receiver/transmitter**
- **Quadruple buffered receiver data registers**
- **Programmable data format**
  - **5 to 8 data bits plus parity**
  - **Odd, even, no parity or force parity**
  - **1, 1.5 or 2 stop bits programmable in 1/16 bit increments**
- **Programmable baud rate for each receiver and transmitter selectable from:**
  - **18 fixed rates: 50 to 38.4K baud**
  - **One user defined rate derived from programmable timer/counter**
  - **External 1x or 16x clock**
- **Parity, framing, and overrun error detection**
- **False start bit detection**
- **Line break detection and generation**
- **Programmable channel mode**
  - **Normal (full duplex)**
  - **Automatic echo**
  - **Local loopback**
  - **Remote loopback**
- **Multi-function programmable 16-bit counter/timer**
- **Multi-function 7-bit input port**
  - **Can serve as clock or control inputs**
  - **Change of state detection on four inputs**
- **Multi-function 8-bit output port**
  - **Individual bit set/reset capability**
  - **Outputs can be programmed to be status/interrupt signals**
- **Versatile interrupt system**
  - **Single interrupt output with eight maskable interrupting conditions**
  - **Output port can be configured to provide a total of up to six separate wire-OR'able interrupt outputs**
- **Maximum data transfer: 1X–1MB/sec, 16X–125KB/sec**
- **Automatic wake-up mode for multidrop applications**
- **Start-end break interrupt/status**
- **Detects break which originates in the middle of a character**
- **On-chip crystal oscillator**
- **TTL compatible**
- **Single +5V power supply**

PIN CONFIGURATION

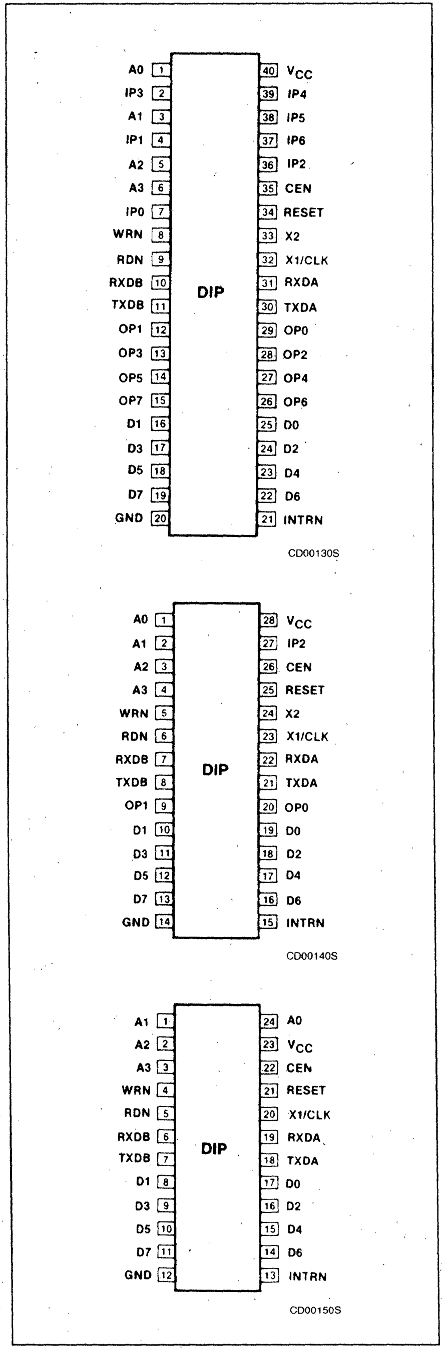
A0 1
IP3 2
A1 3
IP1 4
A2 5
A3 6
IP0 7
WRN 8
RDN 9
RXDB 10
TXDB 11
OP1 12
OP3 13
OP5 14
OP7 15
D1 16
D3 17
D5 18
D7 19
GND 20
40 VCC
39 IP4
38 IP5
37 IP6
36 IP2
35 CEN
34 RESET
33 X2
32 X1/CLK
31 RXDA
30 TXDA
29 OP0
28 OP2
27 OP4
26 OP6
25 D0
24 D2
23 D4
22 D6
21 INTRN
DIP
CD00130S
A0 1
A1 2
A2 3
A3 4
WRN 5
RDN 6
RXDB 7
TXDB 8
OP1 9
D1 10
D3 11
D5 12
D7 13
GND 14
28 VCC
27 IP2
26 CEN
25 RESET
24 X2
23 X1/CLK
22 RXDA
21 TXDA
20 OP0
19 D0
18 D2
17 D4
16 D6
15 INTRN
DIP
CD00140S
A1 1
A2 2
A3 3
WRN 4
RDN 5
RXDB 6
TXDB 7
D1 8
D3 9
D5 10
D7 11
GND 12
24 A0
23 VCC
22 CEN
21 RESET
20 X1/CLK
19 RXDA
18 TXDA
17 D0
16 D2
15 D4
14 D6
13 INTRN
DIP
CD00150S

Dual Asynchronous Receiver/Transmitter (DUART) SCN2681

BLOCK DIAGRAM

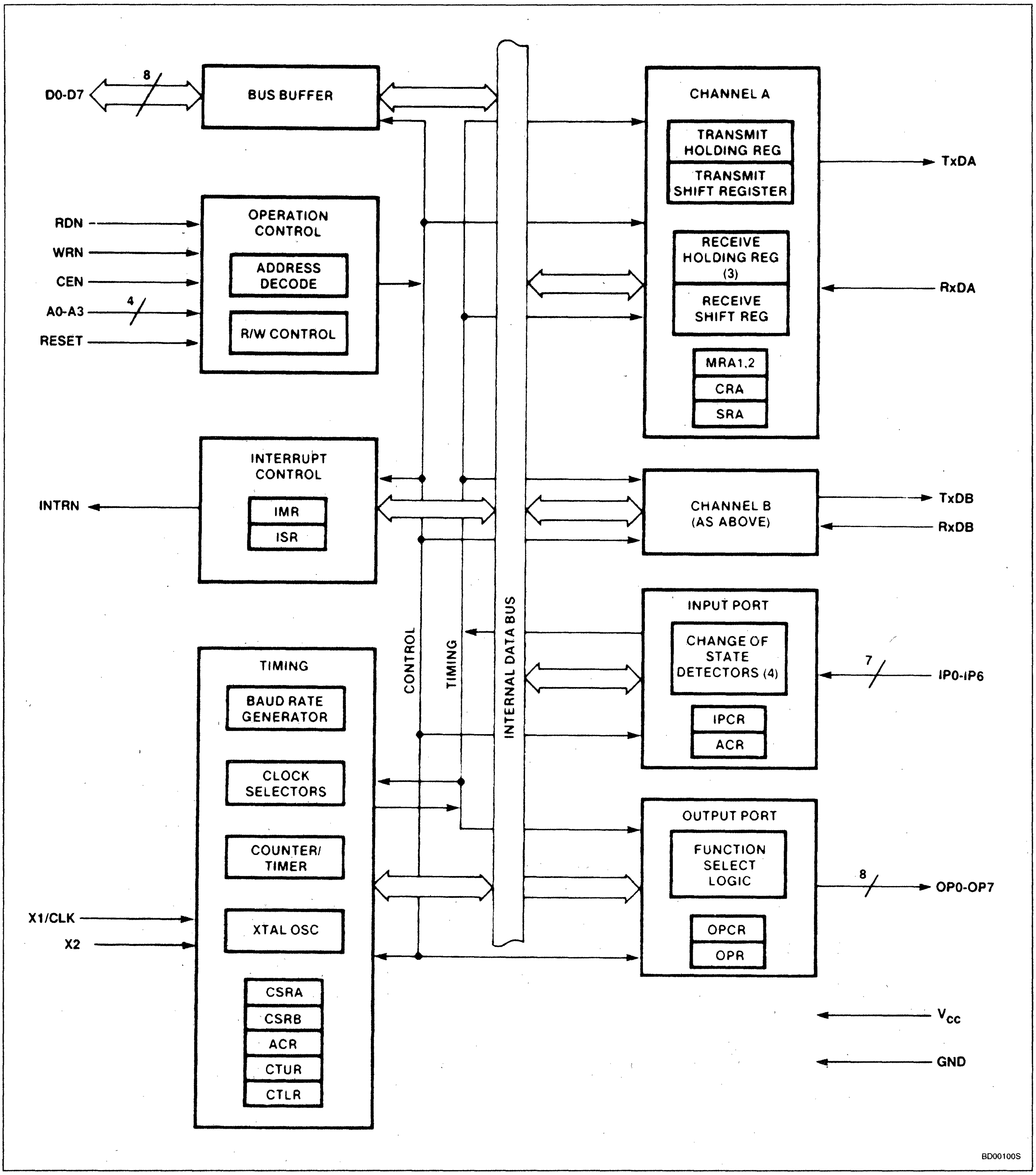
D0-D7
8
BUS BUFFER
RDN
WRN
CEN
A0-A3
4
RESET
OPERATION CONTROL
ADDRESS DECODE
R/W CONTROL
INTRN
INTERRUPT CONTROL
IMR
ISR
TIMING
BAUD RATE GENERATOR
CLOCK SELECTORS
COUNTER/ TIMER
X1/CLK
X2
XTAL OSC
CSRA
CSRB
ACR
CTUR
CTLR
CONTROL
TIMING
INTERNAL DATA BUS
CHANNEL A
TRANSMIT HOLDING REG
TRANSMIT SHIFT REGISTER
RECEIVE HOLDING REG (3)
RECEIVE SHIFT REG
MRA1,2
CRA
SRA
TxDA
RxDA
CHANNEL B (AS ABOVE)
TxDB
RxDB
INPUT PORT
CHANGE OF STATE DETECTORS (4)
IPCR
ACR
7
IP0-IP6
OUTPUT PORT
FUNCTION SELECT LOGIC
OPCR
OPR
8
OP0-OP7
V_{CC}
GND
BD00100S

Signetics

SCC2691

Universal Asynchronous Receiver/Transmitter (UART)

Advance Information

Microprocessor Products

DESCRIPTION

The Signetics SCC2691 Universal Asynchronous Receiver/Transmitter (UART) is a single chip CMOS-LSI communications device that provides a full-duplex asynchronous receiver/transmitter in a single 24 pin DIP. It is fabricated with Signetics CMOS technology which combines the benefits of high density and low power consumption.

The operating speed of the receiver and transmitter can be selected independently as one of eighteen fixed baud rates, a 16x clock derived from a programmable counter/timer, or an external 1x or 16x clock. The baud rate generator and counter/timer can operate directly from a crystal or from external clock inputs. The ability to independently program the operating speed of the receiver and transmitter make the UART particularly attractive for dual-speed channel applications such as clustered terminal systems.

The receiver is quadruple buffered to minimize the potential of receiver overrun or to reduce interrupt overhead in interrupt driven systems. In addition, a handshaking capability is provided to disable a remote UART transmitter when the receiver buffer is full.

The UART provides a power down mode in which the oscillator is frozen but the register contents are stored. This results in reduced power consumption on the order of several magnitudes.

The UART is fully TTL compatible and operates from a single +5V power supply.

FEATURES

- **Full-duplex asynchronous receiver/transmitter**
- **Quadruple buffered receiver data register**
- **Programmable data format:**
  - **5 to 8 data bits plus parity**
  - **Odd, even, no parity or force parity**
  - **I, 1.5 or 2 stop bits programmable in 1/16 bit increments**
- **Baud rate for the receiver and transmitter selectable from:**
  - **18 fixed rates: 50 to 38.4K baud**
  - **One user defined rate derived from programmable timer/counter**
  - **External 1x or 16x clock**
- **Parity, framing, and overrun error detection**
- **False start bit detection**
- **Line break detection and generation**
- **Programmable channel mode**
  - **Normal (full-duplex)**
  - **Automatic echo**
  - **Local loopback**
  - **Remote loopback**
- **Multi-function programmable 16-bit counter/timer**
- **Single interrupt output with seven maskable interrupting conditions**
- **On-chip crystal oscillator**
- **Low power mode**
- **TTL compatible**
- **Single +5V power supply**

PIN CONFIGURATION

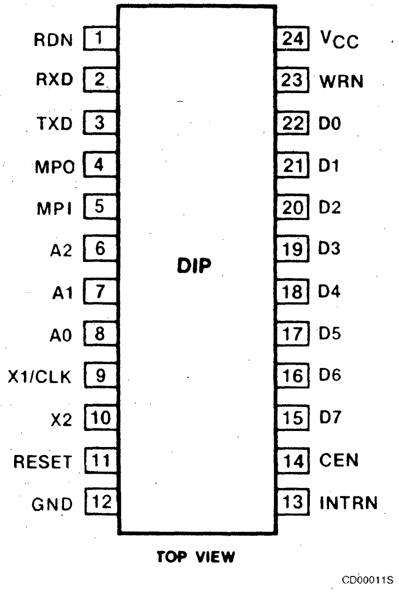

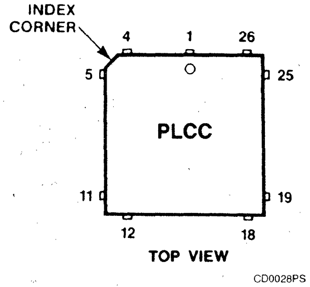

Pin	Function	Pin	Function
1	NC	15	NC
2	RDN	16	INTRN
3	RXD	17	CEN
4	TXD	18	D7
5	MPO	19	D6
6	MPI	20	D5
7	NC	21	D4
8	A2	22	D3
9	A1	23	NC
10	A0	24	D2
11	X1/CLK	25	D1
12	X2	26	D0
13	RESET	27	WRN
14	GND	28	V_{CC}

September 1985

Universal Asynchronous Receiver/Transmitter (UART) SCC2691

ORDERING CODE

PACKAGES	V_{CC}=5V±10%, T_A=0°C to 70°C
Plastic DIP	SCC2691AC1N24
Plastic LCC	SCC2691AC1A28

BLOCK DIAGRAM

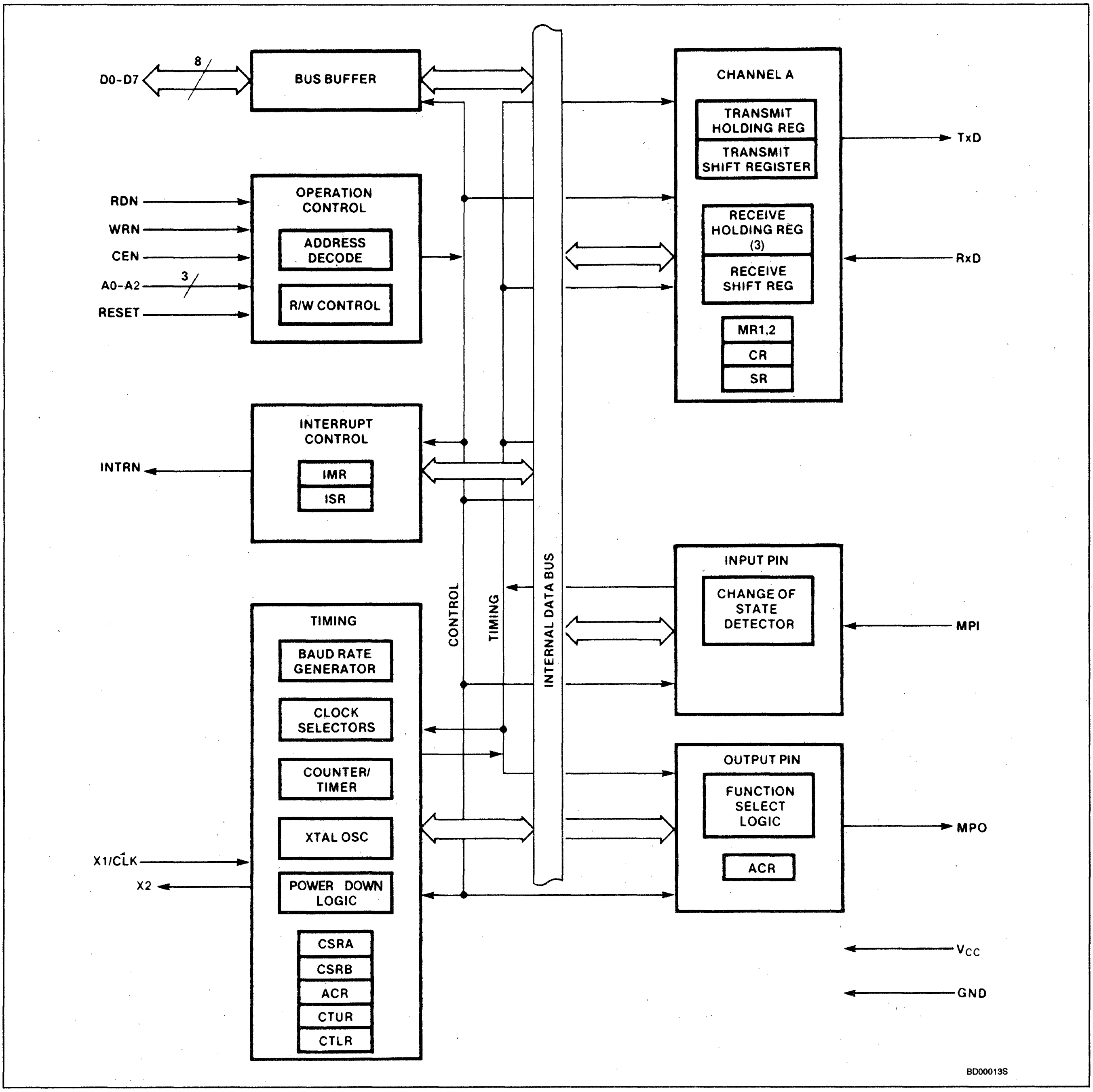
D0-D7
8
BUS BUFFER
CHANNEL A
TRANSMIT HOLDING REG
TRANSMIT SHIFT REGISTER
TxD
RDN
WRN
CEN
A0-A2
3
RESET
OPERATION CONTROL
ADDRESS DECODE
R/W CONTROL
RECEIVE HOLDING REG (3)
RECEIVE SHIFT REG
RxD
MR1,2
CR
SR
INTERRUPT CONTROL
IMR
ISR
INTRN
CONTROL
TIMING
INTERNAL DATA BUS
INPUT PIN
CHANGE OF STATE DETECTOR
MPI
TIMING
BAUD RATE GENERATOR
CLOCK SELECTORS
COUNTER/ TIMER
XTAL OSC
POWER DOWN LOGIC
CSRA
CSRB
ACR
CTUR
CTLR
X1/CLK
X2
OUTPUT PIN
FUNCTION SELECT LOGIC
ACR
MPO
V_{CC}
GND
BD00013S

SCC2698
Octal Universal Asynchronous Receiver/Transmitter (Octal UART)

Product Specification (Brief)

DESCRIPTION

The Signetics SCC2698 Octal Universal Asynchronous Receiver/Transmitter (Octal-UART) is a single chip MOS-LSI communications device that provides an eight channel full-duplex asynchronous receiver/transmitter in a single package. It is fabricated with Signetics CMOS technology which combines the benefits of high density and low power consumption.

The operating speed of each receiver and transmitter can be selected independently as one of eighteen fixed baud rates, a 16x clock derived from a programmable counter/timer, or an external 1x or 16x clock. The baud rate generator and counter/timer can operate directly from a crystal or from external clock inputs. The ability to independently program the operating speed of the receiver and transmitter make the Octal-UART particularly functional for dual-speed channel applications such as clustered terminal systems.

The receiver is quadruply buffered to minimize the potential of receiver overrun, or to reduce interrupt overhead in interrupt driven systems. In addition, a handshaking capability is provided to disable a remote UART transmitter when the receiver buffer is full.

The Octal-UART provides a power down mode in which the oscillator is frozen but the register contents are stored. This results in reduced power consumption on the order of several magnitudes.

The Octal-UART is fully TTL compatible and operates from a single +5V power supply.

FEATURES

- **Eight full-duplex asynchronous receiver/transmitters**
- **Quadruple buffered receiver data register**
- **Programmable data format:**
  - **5 to 8 data bits plus parity**
  - **Odd, even, no parity or force parity**
  - **1, 1.5 or 2 stop bits programmable in 1/16 bit increments**
- **Baud rate for the receiver and transmitter selectable from:**
  - **18 fixed rates: 50 to 38.4K baud**
  - **One user defined rate derived from programmable timer/counter**
  - **External 1x or 16x clock**
- **Parity, framing, and overrun error detection**
- **False start bit detection**
- **Line break detection and generation**
- **Programmable channel mode**
  - **Normal (full duplex), automatic echo, local loop back, remote loop back**
- **Four multi-function programmable 16-bit counter/timers**
- **Single interrupt output with eight maskable interrupting conditions**
- **On-chip crystal oscillator**
- **TTL compatible**
- **Single +5V power supply with low power mode**
- **48-pin DIP and 84-pin PLCC packages**

September 1985

FOR COMPLETE DATA SHEET, Call 800-443-0100, Ext. 518

Octal Universal Asynchronous Receiver/Transmitter SCC2698

ORDERING CODE

PACKAGES	$V_{CC} = 5V \pm 5\%$, $T_A = 0$ to $70°C$
Plastic DIP	SCC2698AC1N48
Plastic LCC	SCC2698AC1A84

BLOCK DIAGRAM

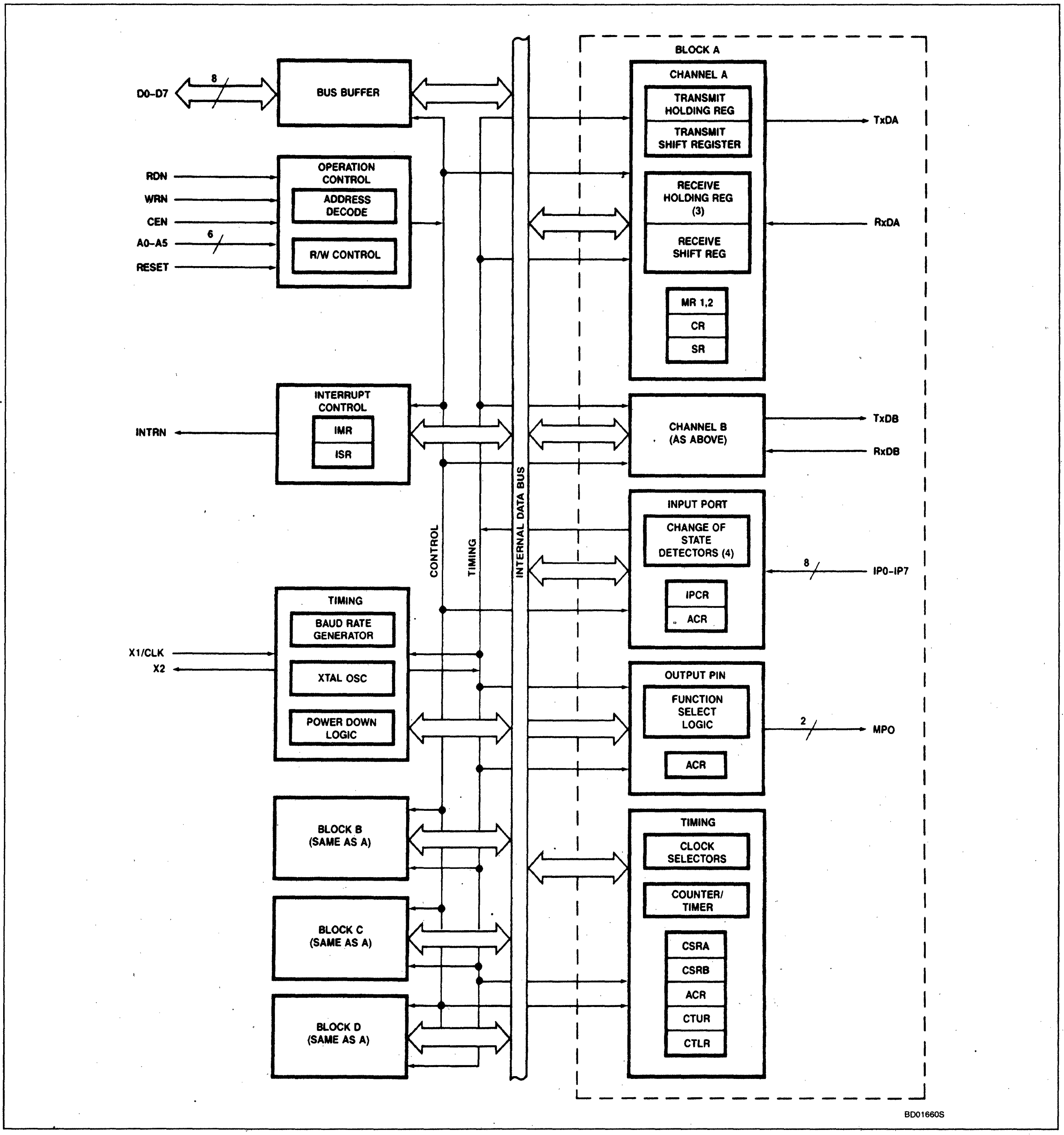
D0–D7
8
BUS BUFFER
RDN
WRN
CEN
A0–A5
6
RESET
OPERATION CONTROL
ADDRESS DECODE
R/W CONTROL
INTRN
INTERRUPT CONTROL
IMR
ISR
X1/CLK
X2
TIMING
BAUD RATE GENERATOR
XTAL OSC
POWER DOWN LOGIC
BLOCK B (SAME AS A)
BLOCK C (SAME AS A)
BLOCK D (SAME AS A)
CONTROL
TIMING
INTERNAL DATA BUS
BLOCK A
CHANNEL A
TRANSMIT HOLDING REG
TRANSMIT SHIFT REGISTER
RECEIVE HOLDING REG (3)
RECEIVE SHIFT REG
MR 1,2
CR
SR
TxDA
RxDA
CHANNEL B (AS ABOVE)
TxDB
RxDB
INPUT PORT
CHANGE OF STATE DETECTORS (4)
IPCR
ACR
8
IP0–IP7
OUTPUT PIN
FUNCTION SELECT LOGIC
ACR
2
MPO
TIMING
CLOCK SELECTORS
COUNTER/ TIMER
CSRA
CSRB
ACR
CTUR
CTLR
BD01660S

Signetics

SCB2675T
Turbo Color/Monochrome Attributes Controller (Turbo-CMAC)

Microprocessor Products

Preliminary Specification

DESCRIPTION

HThe Signetics SCB2675T Turbo Color/Monochrome Attributes Controller (Turbo-CMAC) is a bipolar LSI device designed for CRT terminals and display systems that employ raster scan techniques. It contains a programmable dot clock divider to generate a character clock, a high speed shift register to serialize input dot data into a video stream, latches and logic to apply visual attributes to the resulting display, and logic to display a cursor on the display.

The Turbo-CMAC provides control of visual attributes on a character by character basis for two operating modes: monochrome and color. The monochrome mode provides reverse video, blank, highlight and two general purpose user definable attributes. In this mode, the display characters can be specified to appear on either a light or dark screen background. Retrace video suppression can be automatically or externally controlled. The color mode provides eight colors for foreground (character) video and eight colors for background video together with a luminance output for external color set selection or to simultaneously drive a monochrome monitor. Additionally, both modes provide double width, underline, blink, dot stretching and dot width attributes. In monochrome mode, the SCB2675T emulates the attribute characteristics of Digital Equipment Corporation's VT100 terminal.

The horizontal dot frequency is the basic timing input to the Turbo-CMAC. This clock is divided internally to provide a character clock output for system synchronization. Up to nine bits of dot data are parallel loaded into the video shift register on each character boundary. The two TTL video data outputs in monochrome mode are encoded to provide four video intensities (black, gray, white and highlight). The video data in color mode is encoded to provide eight foreground colors and shifted out on three TTL outputs, together with the luminance output.

FEATURES

- **40MHz video dot rate version**
- **Four video intensities encoded on two TTL outputs (monochrome mode)**
- **Eight foreground and background colors encoded on three TTL outputs (color mode)**
- **Internally latched character attributes:**
  - **Reverse video**
  - **Blank**
  - **Blink**
  - **Underline**
  - **Highlight**
  - **Two general purpose**
  - **Eight foreground colors**
  - **Eight background colors**
  - **Dot width control**
  - **Double width characters**
- **VT100 compatible attributes**
- **Reverse video cursor with optional white cursor in color mode**
- **Up to 10 dots per character**
- **Light or dark background in monochrome mode**
  - **Automatic retrace blanking**
- **Programmable dot stretching**
- **Compatible with SCN2674 AVDC and SCN2670 DCGG**
- **TTL compatible**
- **40-pin dual in-line package**

APPLICATIONS

- **CRT terminals**
- **Word processing systems**
- **Small business computers**

PIN CONFIGURATION

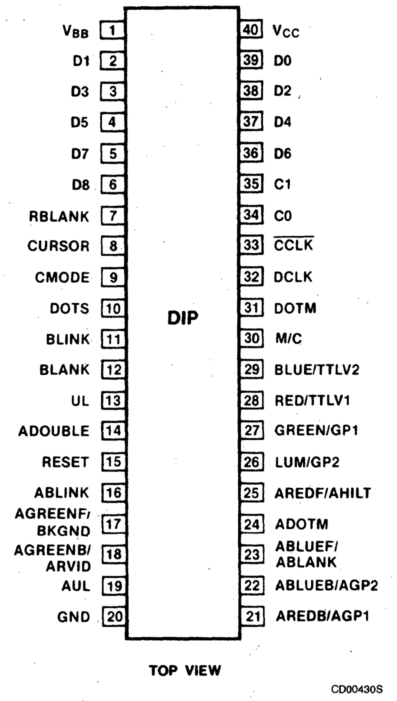
VBB 1
D1 2
D3 3
D5 4
D7 5
D8 6
RBLANK 7
CURSOR 8
CMODE 9
DOTS 10
BLINK 11
BLANK 12
UL 13
ADOUBLE 14
RESET 15
ABLINK 16
AGREENF/BKGND 17
AGREENB/ARVID 18
AUL 19
GND 20
40 VCC
39 D0
38 D2
37 D4
36 D6
35 C1
34 C0
33 CCLK
32 DCLK
31 DOTM
30 M/C
29 BLUE/TTLV2
28 RED/TTLV1
27 GREEN/GP1
26 LUM/GP2
25 AREDF/AHILT
24 ADOTM
23 ABLUEF/ABLANK
22 ABLUEB/AGP2
21 AREDB/AGP1
DIP
TOP VIEW
CD00430S

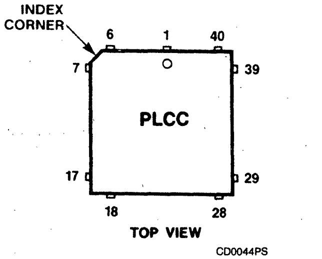
INDEX CORNER
6
1
40
7
39
PLCC
17
29
18
28
TOP VIEW
CD0044PS

Pin	Function	Pin	Function
2	V_{BB}	24	AREDB/AGP1
3	D1	25	ABLUEB/AGP2
4	D3	26	ABLUEF/ABLANK
5	D5	27	ADOTM
6	D7	28	AREDF/AHILT
7	D8	29	LUM/GP2
8	RBLANK	30	GREEN/GP1
9	CURSOR	31	RED/TTLV1
10	CMODE	32	BLUE/TTLV2
11	DOTS	33	M/C
13	BLINK	35	DOTM
14	BLANK	36	DCLK
15	UL	37	$\overline{CCLK}$
16	ADOUBLE	38	C0
17	RESET	39	C1
18	ABLINK	40	D6
19	AGREENF/BKGND	41	D4
20	AGREENB/ARVID	42	D2
21	AUL	43	D0
22	GND	44	V_{CC}

September 1985

Turbo Color/Monochrome Attributes Controller (Turbo-CMAC) SCB2675T

ORDERING CODE

PACKAGES	DOTS PER CHARACTER	V_{CC} = 5V ±5%, 0°C to +70°C
		40MHz
Plastic DIP Plastic LCC	7, 8, 9, 10	SCB2675TC4N40 SCB2675TC4A44

BLOCK DIAGRAM

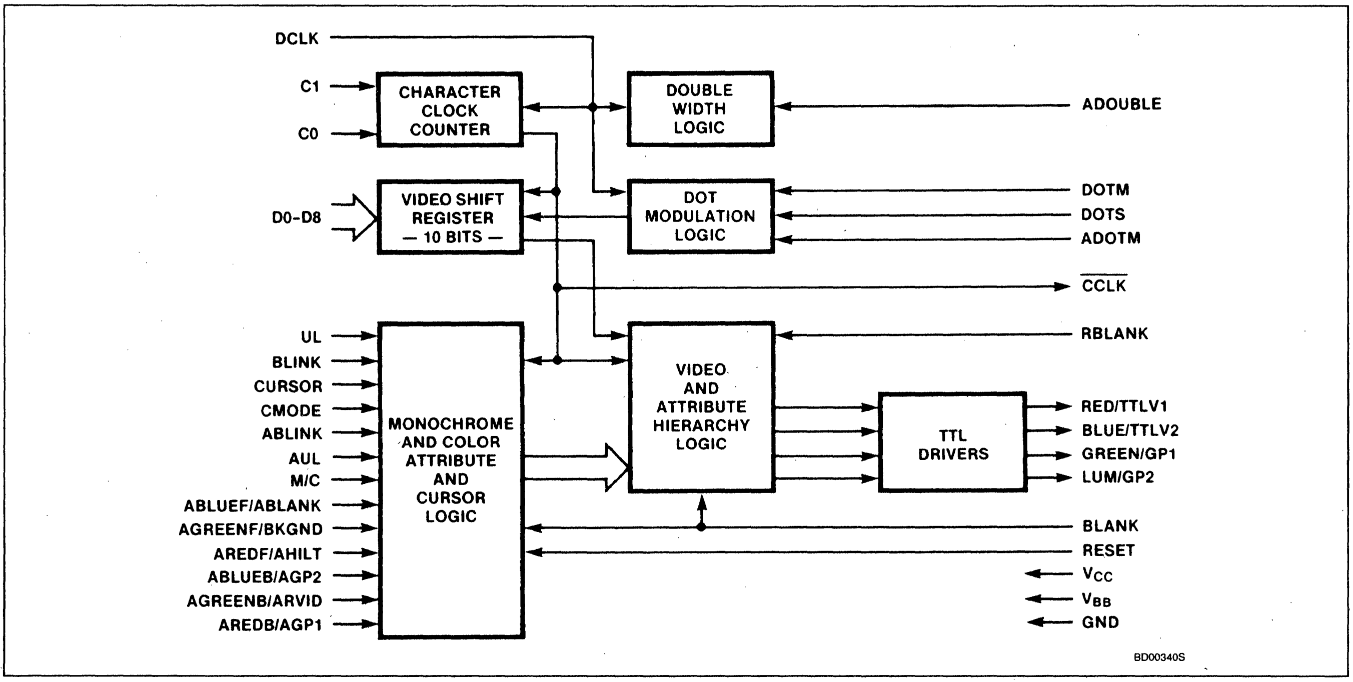
DCLK
C1
C0
CHARACTER CLOCK COUNTER
DOUBLE WIDTH LOGIC
ADOUBLE
D0-D8
VIDEO SHIFT REGISTER — 10 BITS —
DOT MODULATION LOGIC
DOTM
DOTS
ADOTM
CCLK
RBLANK
UL
BLINK
CURSOR
CMODE
ABLINK
AUL
M/C
ABLUEF/ABLANK
AGREENF/BKGND
AREDF/AHILT
ABLUEB/AGP2
AGREENB/ARVID
AREDB/AGP1
MONOCHROME AND COLOR ATTRIBUTE AND CURSOR LOGIC
VIDEO AND ATTRIBUTE HIERARCHY LOGIC
TTL DRIVERS
RED/TTLV1
BLUE/TTLV2
GREEN/GP1
LUM/GP2
BLANK
RESET
V_{CC}
V_{BB}
GND
BD00340S

Signetics

SCN2672
Programmable Video Timing Controller (PVTC)

Product Specification

Microprocessor Products

DESCRIPTION

The Signetics SCN2672 Programmable Video Timing Controller (PVTC) is a programmable device designed for use in CRT terminals and display systems that employ raster scan techniques. The PVTC generates the vertical and horizontal timing signals necessary for the display of interlaced or non-interlaced data on a CRT monitor. It provides consecutive addressing to a user specified display buffer memory domain and controls the CPU-display buffer interface for various buffer configuration modes. A variety of operating modes, display formats, and timing profiles can be implemented by programming the control registers in the PVTC.

A minimum CRT terminal system configuration consists of a PVTC, an SCN2671 Keyboard and Communication Controller (PKCC), an SCN2670 Display Character and Graphics Generator (DCGG), an SCN2673/2677 Video and Attributes Controller (VAC), a single chip microcomputer such as the 8048, a display buffer RAM, and a small amount of TTL for miscellaneous address decoding, interface, and control. Typically, the package count for a minimum system is between 15 and 20 devices; system complexity can be enhanced by upgrading the microprocessor and expanding via the system address and data busses.

FEATURES

- **4MHz and 2.7MHz character rate versions**
- **Up to 256 characters per row**
- **1 to 16 raster lines per character row**
- **Up to 128 character rows per frame**
- **Programmable horizontal and vertical sync generators**
- **Interlaced or non-interlaced operation**
- **Up to 16K RAM addressing for multiple page operation**
- **Automatic wraparound of RAM**
- **Addressable incrementable and readable cursor**
- **Programmable cursor size, position, and blink**
- **Split screen and horizontal scroll capability**
- **Light pen register**
- **Selectable buffer interface modes**
- **Dynamic RAM refresh**
- **Completely TTL compatible**
- **Single +5 volt power supply**
- **Power on reset circuit**

APPLICATIONS

- **CRT terminals**
- **Word processing systems**
- **Small business computers**
- **Home Computers**

PIN CONFIGURATION

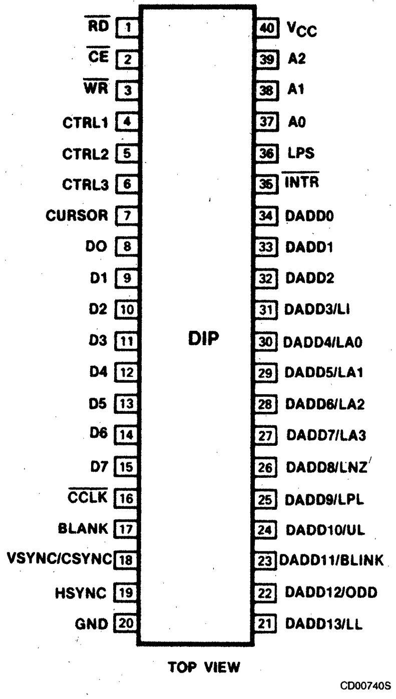
RD 1
CE 2
WR 3
CTRL1 4
CTRL2 5
CTRL3 6
CURSOR 7
DO 8
D1 9
D2 10
D3 11
D4 12
D5 13
D6 14
D7 15
CCLK 16
BLANK 17
VSYNC/CSYNC 18
HSYNC 19
GND 20
DIP
40 Vcc
39 A2
38 A1
37 A0
36 LPS
35 INTR
34 DADD0
33 DADD1
32 DADD2
31 DADD3/LI
30 DADD4/LA0
29 DADD5/LA1
28 DADD6/LA2
27 DADD7/LA3
26 DADD8/LNZ
25 DADD9/LPL
24 DADD10/UL
23 DADD11/BLINK
22 DADD12/ODD
21 DADD13/LL
TOP VIEW
CD00740S

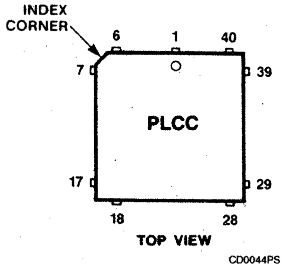
INDEX CORNER
6
1
40
7
39
PLCC
17
29
18
28
TOP VIEW
CD0044PS

Pin	Function	Pin	Function
1	NC	23	NC
2	$\overline{RD}$	24	DADD13/LL
3	$\overline{CE}$	25	DADD12/ODD
4	$\overline{WR}$	26	DADD11/BLINK
5	CTRL1	27	DADD10/UL
6	CTRL2	28	DADD9/LPL
7	CTRL3	29	DADD8/LNZ
8	CURSOR	30	DADD7/LA3
9	D0	31	DADD6/LA2
10	D1	32	DADD5/LA1
11	D2	33	DADD4/LA0
12	NC	34	NC
13	D3	35	DADD3/LI
14	D4	36	DADD2
15	D5	37	DADD1
16	D6	38	DADD0
17	D7	39	$\overline{INTR}$
18	$\overline{CCLK}$	40	LPS
19	BLANK	41	A0
20	VSYNC/CSYNC	42	A1
21	HSYNC	43	A2
22	GND	44	V_{CC}

February 20, 1985

853-0089-77351

FOR COMPLETE DATA SHEET, Call 800-443-0100, Ext. 518

Programmable Video Timing Controller (PVTC) SCN2672

ORDERING CODE

PACKAGES	$V_{CC} = 5V \pm 5\%$, $T_A = 0°C$ to $70°C$	
	4MHz	2.7MHz
Ceramic DIP	SCN2672BC4I40	SCN2672BC3I40
Plastic DIP	SCN2672BC4N40	SCN2672BC3N40
Plastic LCC	SCN2672BC4A44	SCN2672BC3A44

FUNCTIONAL DESCRIPTION

As shown on the block diagram, the PVTC contains the following major blocks:

- Data bus buffer
- Interface Logic
- Operation Control
- Timing
- Display Control
- Buffer Control

BLOCK DIAGRAM

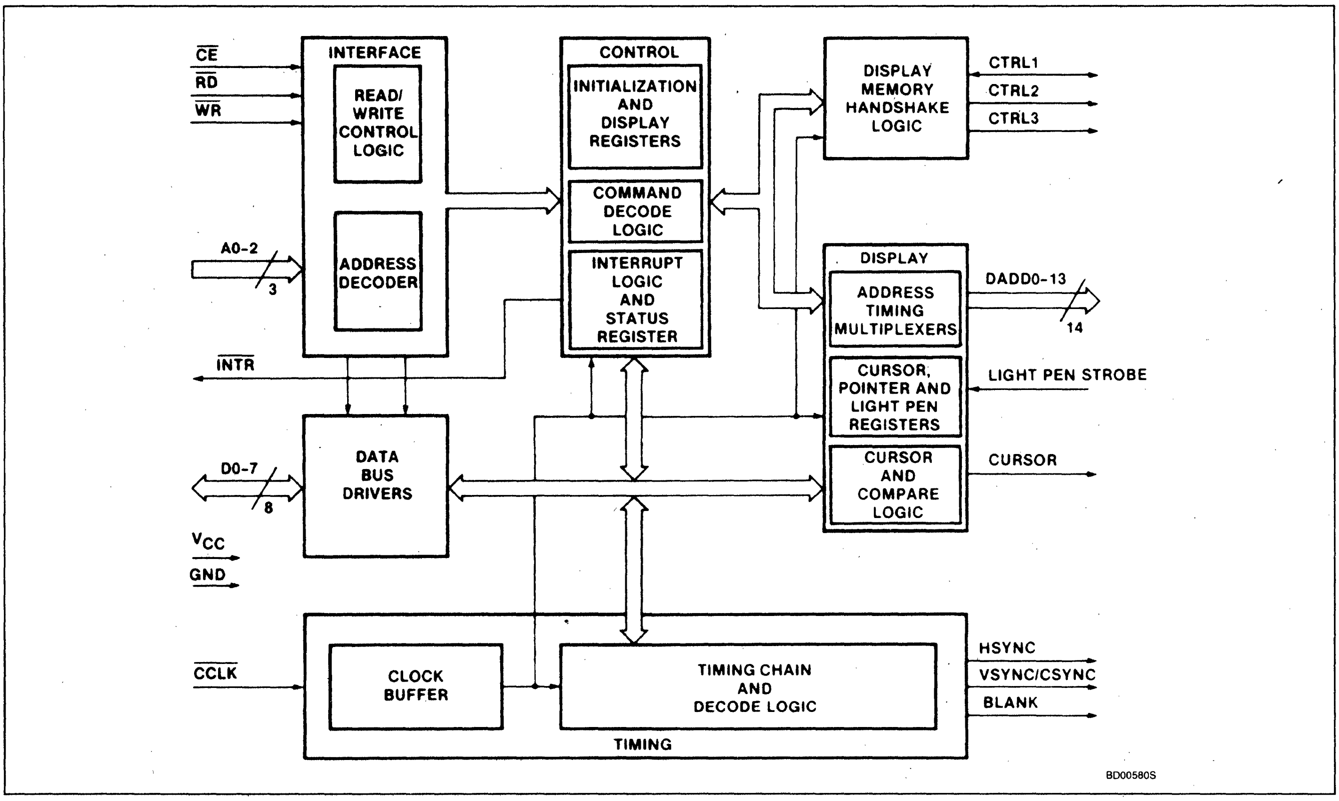
$\overline{CE}$
$\overline{RD}$
$\overline{WR}$
INTERFACE
READ/ WRITE CONTROL LOGIC
A0-2
3
ADDRESS DECODER
$\overline{INTR}$
D0-7
8
DATA BUS DRIVERS
V_{CC}
GND
$\overline{CCLK}$
CONTROL
INITIALIZATION AND DISPLAY REGISTERS
COMMAND DECODE LOGIC
INTERRUPT LOGIC AND STATUS REGISTER
DISPLAY MEMORY HANDSHAKE LOGIC
CTRL1
CTRL2
CTRL3
DISPLAY
ADDRESS TIMING MULTIPLEXERS
DADD0-13
14
CURSOR, POINTER AND LIGHT PEN REGISTERS
LIGHT PEN STROBE
CURSOR AND COMPARE LOGIC
CURSOR
CLOCK BUFFER
TIMING CHAIN AND DECODE LOGIC
TIMING
HSYNC
VSYNC/CSYNC
BLANK
BD00580S

Signetics

SCB2673
Video Attributes Controller (VAC)

Product Specification

Microprocessor Products

DESCRIPTION

The Signetics 2673A and 2673B Video Attributes Controllers (VAC) are bipolar LSI devices designed for CRT terminals and display systems that employ raster scan techniques. Each contains a high speed video shift register, field and character attributes logic, attribute latch, cursor format logic and half dot shift control.

The VAC provides control of visual attributes on a field or character by character. Internal logic preserves field attribute data from character row to character row so that an attribute byte is not required at the beginning of each row. The 2673B provides for reverse video, blank (non-display), blink, underline and highlight attributes and a graphics mode attribute to work in conjunction with the Signetics 2670 Display Character and Graphics Generator (DCGG). The 2673A substitutes a light pen (strike-thru) attribute for the graphics attribute.

The horizontal dot frequency is the basic timing input to the VAC. Internally, this clock is divided down to provide a character clock output for system synchronization. Up to ten bits of video dot data are parallel loaded into the video shift register on each character boundary. The video data is shifted out on three outputs at the dot frequency. On the VIDEO output, the data is presented as a three level signal representing low, medium and high intensities. The three intensities are also encoded on two TTL compatible video outputs. Light or dark screen background can be selected.

FEATURES

- **18 and 25MHz video dot rate**
- **Three level current driven video output**
- **Three level encoded TTL video outputs**
- **Character/field attribute logic:**
  - **Reverse video**
  - **Character blank**
  - **Character blink**
  - **Underline**
  - **Highlight**
  - **Light pen strike-thru or graphics control**
- **Field attributes extend from row to row**
- **Light or dark field**
- **Cursor reverse video logic**
- **Up to 10 dots per character**
- **Composite blanking for light field retrace**
- **Optional field graphics control output**
- **High speed bipolar design**
- **TTL compatible**
- **Compatible with Signetics 2672 PVTC and 2670 DCGG**

APPLICATIONS

- **CRT terminals**
- **Word processing systems**
- **Small business computers**

PIN CONFIGURATION

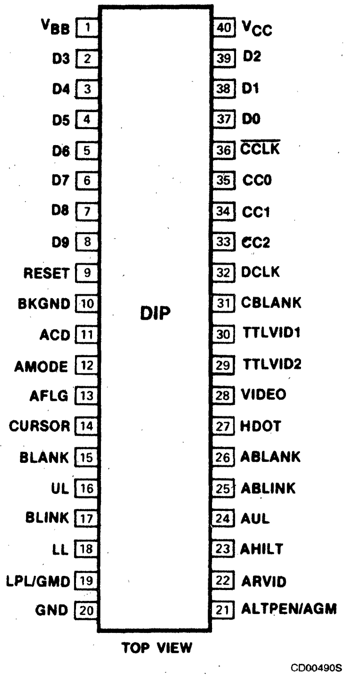
VBB 1
D3 2
D4 3
D5 4
D6 5
D7 6
D8 7
D9 8
RESET 9
BKGND 10
ACD 11
AMODE 12
AFLG 13
CURSOR 14
BLANK 15
UL 16
BLINK 17
LL 18
LPL/GMD 19
GND 20
40 VCC
39 D2
38 D1
37 D0
36 CCLK
35 CC0
34 CC1
33 CC2
32 DCLK
31 CBLANK
30 TTLVID1
29 TTLVID2
28 VIDEO
27 HDOT
26 ABLANK
25 ABLINK
24 AUL
23 AHILT
22 ARVID
21 ALTPEN/AGM
DIP
TOP VIEW
CD00490S

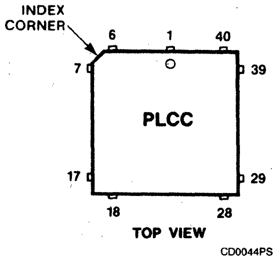
INDEX CORNER
6
1
40
7
39
PLCC
17
29
18
28
TOP VIEW
CD0044PS

Pin	Function	Pin	Function
1	NC	23	NC
2	V_{BB}	24	ALTPEN/AGM
3	D3	25	ARVID
4	D4	26	AHILT
5	D5	27	AUL
6	D6	28	ABLINK
7	D7	29	ABLANK
8	D8	30	HDOT
9	D9	31	VIDEO
10	RESET	32	TTLVID2
11	BKGND	33	TTLVID1
12	NC	34	NC
13	ACD	35	CBLANK
14	AMODE	36	DCLK
15	AFLG	37	CC2
16	CURSOR	38	CC1
17	BLANK	39	CC0
18	UL	40	$\overline{\text{CCLK}}$
19	BLINK	41	D0
20	LL	42	D1
21	LPL/GMD	43	D2
22	GND	44	V_{CC}

Video Attributes Controller (VAC) SCB2673

ORDERING CODE

PACKAGES	$V_{CC} = 5V \pm 5\%$, $T_A = 0°C$ to 70°C			
	Graphics Attribute		**Light Pen Attribute**	
	25MHz	**18MHz**	**25MHz**	**18MHz**
Ceramic DIP	SCB2673BC5I40	SCB2673BC8I40	SCB2673AC5I40	SCB2673AC8I40
Plastic DIP	SCB2673BC5N40	SCB2673BC8N40	SCB2673AC5N40	SCB2673AC8N40
Plastic LCC	SCB2673BC5A44	SCB2673BC8A44	SCB2673AC5A44	SCB2673AC8A44

BLOCK DIAGRAM

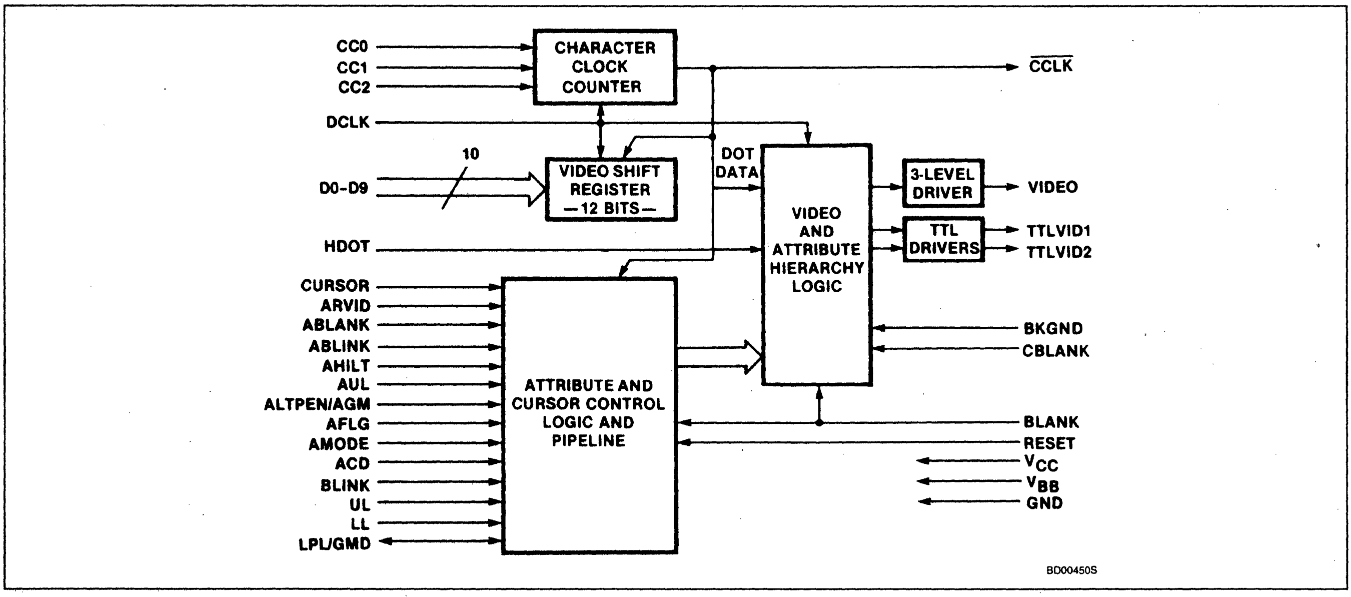
CC0
CC1
CC2
CHARACTER CLOCK COUNTER
CCLK
DCLK
10
D0-D9
VIDEO SHIFT REGISTER —12 BITS—
DOT DATA
VIDEO AND ATTRIBUTE HIERARCHY LOGIC
3-LEVEL DRIVER
VIDEO
TTL DRIVERS
TTLVID1
TTLVID2
HDOT
CURSOR
ARVID
ABLANK
ABLINK
AHILT
AUL
ALTPEN/AGM
AFLG
AMODE
ACD
BLINK
UL
LL
LPL/GMD
ATTRIBUTE AND CURSOR CONTROL LOGIC AND PIPELINE
BKGND
CBLANK
BLANK
RESET
VCC
VBB
GND
BD00450S

Signetics

SCN2674
Advanced Video Display Controller (AVDC)

Product Specification

Microprocessor Products

DESCRIPTION

The Signetics SCN2674 Advanced Video Display Controller (AVDC) is a programmable device designed for use in CRT terminals and display systems that employ raster scan techniques. The AVDC generates the vertical and horizontal timing signals necessary for the display of interlaced or non-interlaced data on a CRT monitor. It provides consecutive addressing to a user specified display buffer memory domain and controls the CPU display buffer interface for various buffer configuration modes. A variety of operating modes, display formats, and timing profiles can be implemented by programming the control registers in the AVDC.

A minimum CRT terminal system configuration consists of an AVDC, an SCN2671 Keyboard and Communication Controller (PKCC), an SCN2670 Display Character and Graphics Generator (DCGG), an SCB2675 Color/Monochrome Attributes Controller (CMAC), a single chip microcomputer such as the 8048, a display buffer RAM, and a small amount of TTL for miscellaneous address decoding, interface, and control. Typically, the package count for a minimum system is between 15 and 20 devices; system complexity can be enhanced by upgrading the microprocessor and expanding via the system address and data busses.

FEATURES

- 2.7MHz and 4MHz character rate
- 1 to 256 characters per row
- 1 to 16 raster lines per character row
- 1 to 128 character rows per frame
- Bit mapped graphics mode
- Programmable horizontal and vertical sync generators
  - RS170 compatible sync
- Interlaced or non-interlaced operation
- Up to 64K RAM addressing for multiple page operation
- Readable, writable and incrementable cursor
  - Programmable cursor size and blink
- AC line lock
- Automatic wraparound of RAM
- Automatic split screen
- Automatic bidirectional soft scrolling
  - Programmable scan line increment
- Row table addressing mode
- Double height tops and bottoms
- Double width control output
- Selectable buffer interface modes
- Dynamic RAM refresh
- Completely TTL compatible
- Single +5 volt power supply
- Power on reset circuit

APPLICATIONS

- CRT terminals
- Word processing systems
- Small business computers
- Home computers

PIN CONFIGURATION

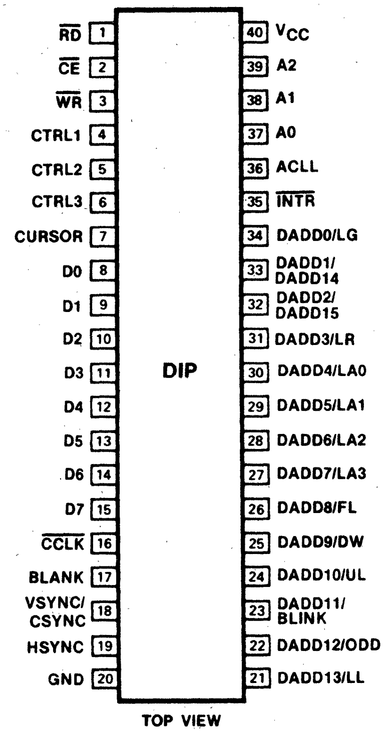
$\overline{RD}$ 1
$\overline{CE}$ 2
$\overline{WR}$ 3
CTRL1 4
CTRL2 5
CTRL3 6
CURSOR 7
D0 8
D1 9
D2 10
D3 11
D4 12
D5 13
D6 14
D7 15
$\overline{CCLK}$ 16
BLANK 17
VSYNC/CSYNC 18
HSYNC 19
GND 20
40 V_{CC}
39 A2
38 A1
37 A0
36 ACLL
35 $\overline{INTR}$
34 DADD0/LG
33 DADD1/DADD14
32 DADD2/DADD15
31 DADD3/LR
30 DADD4/LA0
29 DADD5/LA1
28 DADD6/LA2
27 DADD7/LA3
26 DADD8/FL
25 DADD9/DW
24 DADD10/UL
23 DADD11/BLINK
22 DADD12/ODD
21 DADD13/LL
DIP
TOP VIEW

CD00500S

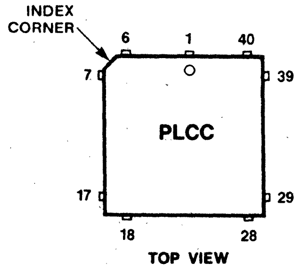
INDEX CORNER
6
1
40
7
39
PLCC
17
29
18
28
TOP VIEW

CD0044PS

Pin	Function	Pin	Function	Pin	Function
1	NC	17	D7	31	DADD6/LA2
2	$\overline{RD}$	18	$\overline{CCLK}$	32	DADD5/LA1
3	$\overline{CE}$	19	BLANK	33	DADD4/LA0
4	$\overline{WR}$	20	VSYNC CSYNC/	34	NC
5	CTRL1	21	HSYNC	35	DADD3/LR
6	CTRL2	22	GND	36	DADD2/ DADD15
7	CTRL3	23	NC	37	DADD1/ DADD14
8	CURSOR	24	DADD13/LL	38	DADD0/LG
9	D0	25	DADD12/ ODD	39	$\overline{INTR}$
10	D1	26	DADD11/ BLINK	40	ACLL
11	D2	27	DADD10/UL	41	A0
12	NC	28	DADD9/DW	42	A1
13	D3	29	DADD8/FL	43	A2
14	D4	30	DADD7/LA3	44	V_{CC}
15	D5				
16	D6				

FOR COMPLETE DATA SHEET, Call 800-443-0100, Ext. 518

Advanced Video Display Controller (AVDC) SCN2674

ORDERING CODE

PACKAGES	$V_{CC} = 5V \pm 5\%$, $T_A = 0°C$ to 70°C	
	4MHz	2.7MHz
Ceramic DIP	SCN2674BC4I40	SCN2674BC3I40
Plastic DIP	SCN2674BC4N40	SCN2674BC3N40
Plastic LCC	SCN2674BC4A44	SCN2674BC3A44

BLOCK DIAGRAM

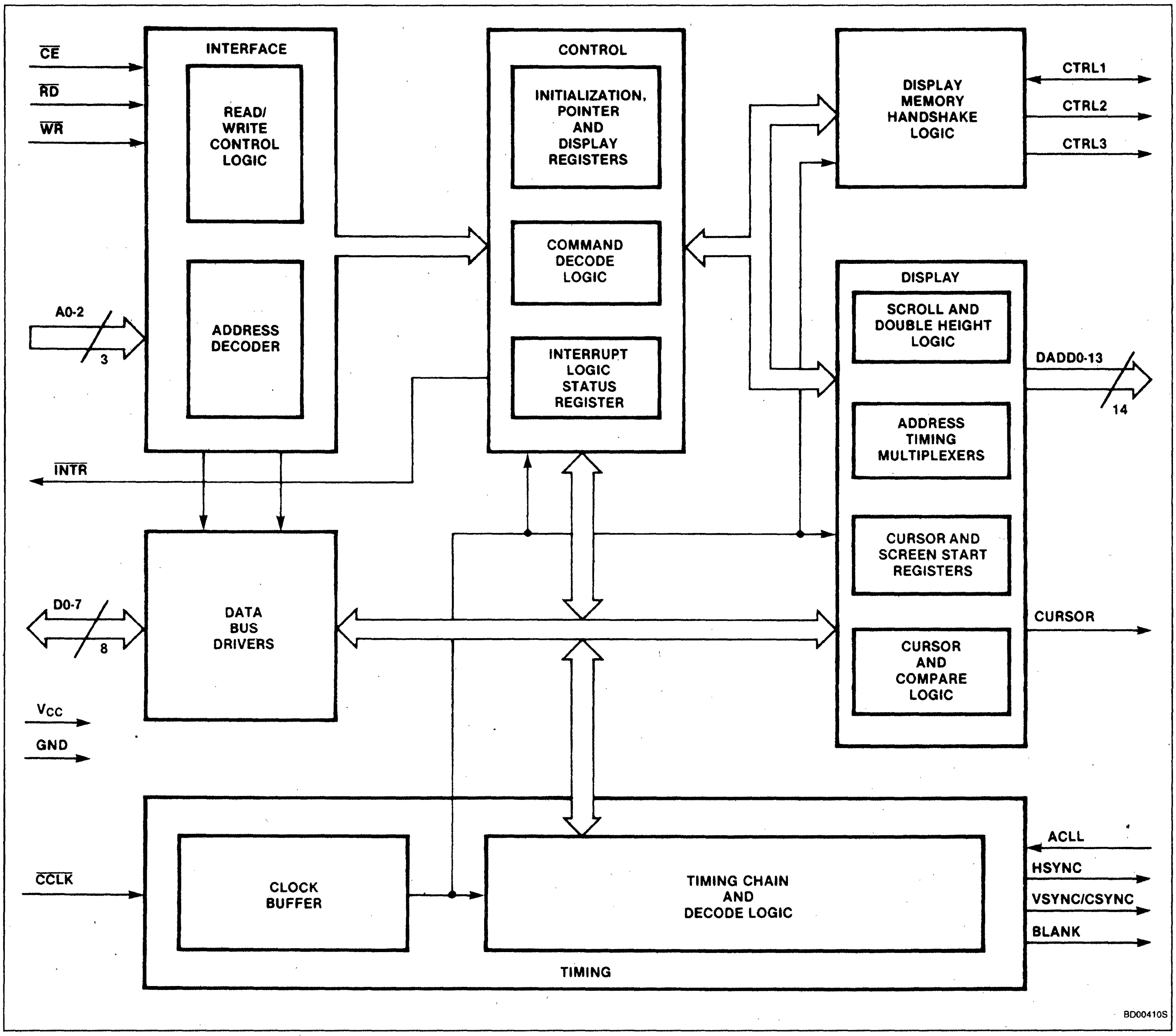
$\overline{CE}$
$\overline{RD}$
$\overline{WR}$
INTERFACE
READ/ WRITE CONTROL LOGIC
ADDRESS DECODER
A0-2
3
CONTROL
INITIALIZATION, POINTER AND DISPLAY REGISTERS
COMMAND DECODE LOGIC
INTERRUPT LOGIC STATUS REGISTER
DISPLAY MEMORY HANDSHAKE LOGIC
CTRL1
CTRL2
CTRL3
DISPLAY
SCROLL AND DOUBLE HEIGHT LOGIC
ADDRESS TIMING MULTIPLEXERS
CURSOR AND SCREEN START REGISTERS
CURSOR AND COMPARE LOGIC
DADD0-13
14
CURSOR
$\overline{INTR}$
D0-7
8
DATA BUS DRIVERS
V_{CC}
GND
$\overline{CCLK}$
CLOCK BUFFER
TIMING CHAIN AND DECODE LOGIC
TIMING
ACLL
HSYNC
VSYNC/CSYNC
BLANK
BD00410S

February 20, 1985

Signetics

SCB2675
Color/Monochrome Attributes Controller (CMAC)

Product Specification

Microprocessor Products

DESCRIPTION

The Signetics SCB2675 Color/Monochrome Attributes Controller (CMAC) is a bipolar LSI device designed for CRT terminals and display systems that employ raster scan techniques. It contains a programmable dot clock divider to generate a character clock, a high speed shift register to serialize input dot data into a video stream, latches and logic to apply visual attributes to the resulting display, and logic to display a cursor on the display.

The CMAC provides control of visual attributes on a character by character basis for two operating modes: monochrome and color. The monochrome mode provides reverse video, blank, highlight and two general purpose user definable attributes. In this mode, the display characters can be specified to appear on either a light or dark screen background. Retrace video suppression can be automatically or externally controlled. The color mode provides eight colors for foreground (character) video and eight colors for background video together with a luminance output for external color set selection or to simultaneously drive a monochrome monitor. Additionally, both modes provide double width, underline, blink, dot stretching and dot width attributes. In monochrome mode, the SCB2675 emulates the attribute characteristics of Digital Equipment Corporation's VT100 terminal.

The horizontal dot frequency is the basic timing input to the CMAC. This clock is divided internally to provide a character clock output for system synchronization. Up to nine bits of dot data are parallel loaded into the video shift register on each character boundary. The two TTL video data outputs in monochrome mode are encoded to provide four video intensities (black, gray, white and highlight). The video data in color mode is encoded to provide eight foreground colors and shifted out on three TTL outputs, together with the luminance output.

FEATURES

- **25MHz and 18MHz video dot rate versions***
- **Four video intensities encoded on two TTL outputs (monochrome mode)**
- **Eight foreground and background colors encoded on three TTL outputs (color mode)**
- **Internally latched character attributes:**
  - **Reverse video**
  - **Blank**
  - **Blink**
  - **Underline**
  - **Highlight**
  - **Two general purpose**
  - **Eight foreground colors**
  - **Eight background colors**
  - **Dot width control**
  - **Double width characters**
- **VT100 compatible attributes**
- **Reverse video cursor with optional white cursor in color mode**
- **Up to 10 dots per character**
- **Light or dark background in monochrome mode**
  - **Automatic retrace blanking**
- **Programmable dot stretching**
- **Compatible with SCN2674 AVDC and SCN2670 DCGG**
- **TTL compatible**
- **40-pin dual in-line package**

APPLICATIONS

- **CRT terminals**
- **Word processing systems**
- **Small business computers**

---

*40MHz SCB2675T also available.

PIN CONFIGURATION

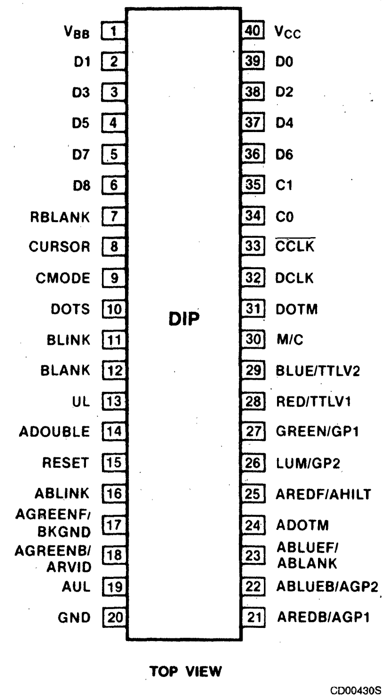
VBB 1
D1 2
D3 3
D5 4
D7 5
D8 6
RBLANK 7
CURSOR 8
CMODE 9
DOTS 10
BLINK 11
BLANK 12
UL 13
ADOUBLE 14
RESET 15
ABLINK 16
AGREENF/BKGND 17
AGREENB/ARVID 18
AUL 19
GND 20
40 VCC
39 D0
38 D2
37 D4
36 D6
35 C1
34 C0
33 CCLK
32 DCLK
31 DOTM
30 M/C
29 BLUE/TTLV2
28 RED/TTLV1
27 GREEN/GP1
26 LUM/GP2
25 AREDF/AHILT
24 ADOTM
23 ABLUEF/ABLANK
22 ABLUEB/AGP2
21 AREDB/AGP1
DIP
TOP VIEW
CD00430S

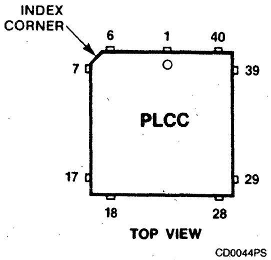
INDEX CORNER
6
1
40
7
39
PLCC
17
29
18
28
TOP VIEW
CD0044PS

Pin	Function	Pin	Function
2	V_{BB}	24	AREDB/AGP1
3	D1	25	ABLUEB/AGP2
4	D3	26	ABLUEF/ABLANK
5	D5	27	ADOTM
6	D7	28	AREDF/AHILT
7	D8	29	LUM/GP2
8	RBLANK	30	GREEN/GP1
9	CURSOR	31	RED/TTLV1
10	CMODE	32	BLUE/TTLV2
11	DOTS	33	M/C
13	BLINK	35	DOTM
14	BLANK	36	DCLK
15	UL	37	$\overline{\text{CCLK}}$
16	ADOUBLE	38	C0
17	RESET	39	C1
18	ABLINK	40	D6
19	AGREENF/BKGND	41	D4
20	AGREENB/ARVID	42	D2
21	AUL	43	D0
22	GND	44	V_{CC}

February 20, 1985

853-0092-77351

Color/Monochrome Attributes Controller (CMAC) SCB2675

ORDERING CODE

PACKAGES	DOTS PER CHARACTER	V_{CC} = 5V ±5%, 0°C to +70°C	
		25MHz	18MHz
Ceramic DIP Plastic DIP Plastic LCC	7, 8, 9, 10	SCB2675BC5I40 SCB2675BC5N40 SCB2675BC5A44	SCB2675BC8I40 SCB2675BC8N40 SCB2675BC8A44
Ceramic DIP Plastic DIP Plastic LCC	6, 8, 9, 10	SCB2675CC5I40 SCB2675CC5N40 SCB2675CC5A44	SCB2675CC8I40 SCB2675CC8N40 SCB2675CC8A44

BLOCK DIAGRAM

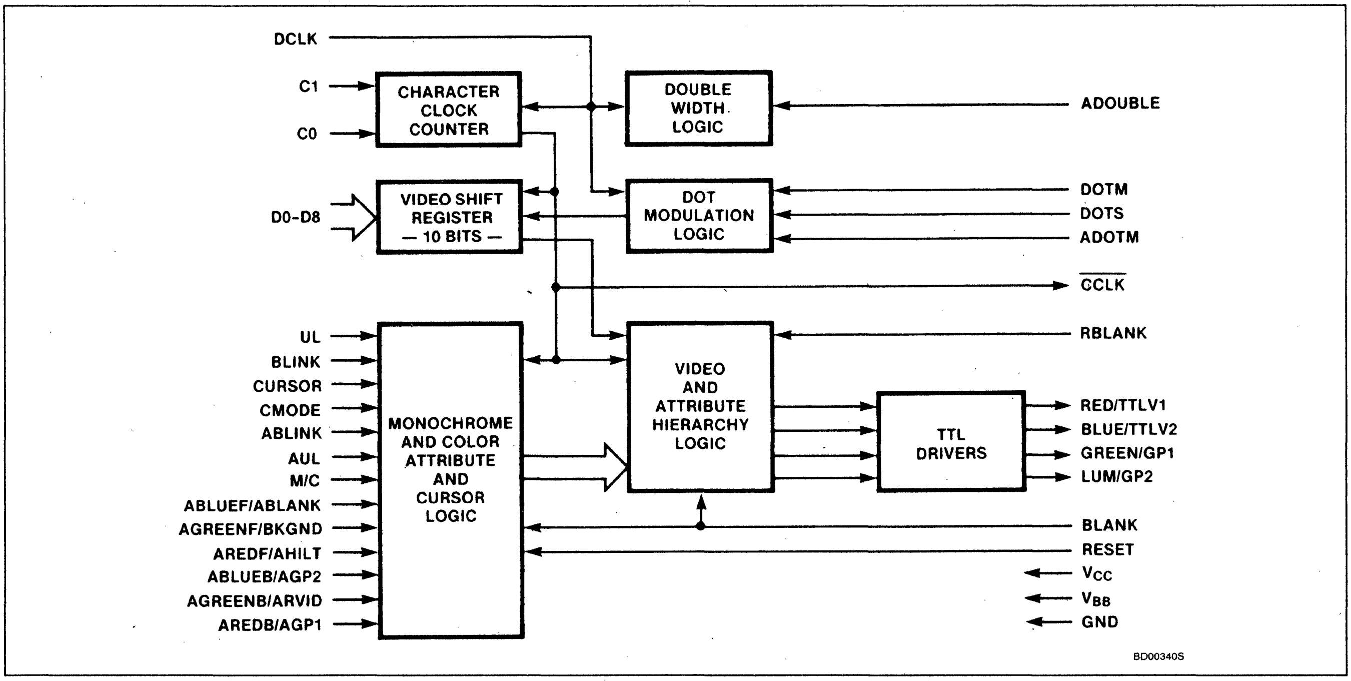
DCLK
C1
C0
CHARACTER CLOCK COUNTER
DOUBLE WIDTH LOGIC
ADOUBLE
D0–D8
VIDEO SHIFT REGISTER — 10 BITS —
DOT MODULATION LOGIC
DOTM
DOTS
ADOTM
CCLK
RBLANK
UL
BLINK
CURSOR
CMODE
ABLINK
AUL
M/C
ABLUEF/ABLANK
AGREENF/BKGND
AREDF/AHILT
ABLUEB/AGP2
AGREENB/ARVID
AREDB/AGP1
MONOCHROME AND COLOR ATTRIBUTE AND CURSOR LOGIC
VIDEO AND ATTRIBUTE HIERARCHY LOGIC
TTL DRIVERS
RED/TTLV1
BLUE/TTLV2
GREEN/GP1
LUM/GP2
BLANK
RESET
V_{CC}
V_{BB}
GND
BD00340S

SCB2677
Video Attributes Controller (VAC)

Product Specification

Microprocessor Products

DESCRIPTION

The Signetics SCB2677A and SCB-2677B Video Attributes Controllers (VAC) are bipolar LSI devices designed for CRT terminals and display systems that employ raster scan techniques. Each contains a high speed video shift register, field and character attributes logic, attribute latch, cursor format logic and half dot shift control.

The VAC provides control of visual attributes on a field or character by character. Internal logic preserves field attribute data from character row to character row so that an attribute byte is not required at the beginning of each row. The SCB2677B provides for reverse video, blank (non-display), blink, underline and highlight attributes and a graphics mode attribute to work in conjunction with the Signetics SCN2670 Display Character and Graphics Generators (DCGG). The SCB2677A substitutes a strike-thru attribute for the graphics attribute.

The horizontal dot frequency is the basic timing input to the VAC. Internally, this clock is divided down to provide a character clock output for system synchronization. Up to ten bits of video dot data are parallel loaded into the video shift register on each character boundary. The video data is encoded to three levels of intensity (black, gray and white) and output on two TTL outputs. Light or dark screen background may be specified.

FEATURES

- **18MHz and 25MHz video dot rate**
- **Three level encoded TTL video outputs**
- **Character/field attribute logic**
  - **Reverse video**
  - **Character blank**
  - **Character blink**
  - **Underline**
  - **Highlight**
- **Strike-thru or graphics control**
- **Field attributes extend from row to row**
- **Light or dark field**
- **Cursor reverse video logic**
- **Up to 12 dots per character**
- **Retrace blanking for light field**
- **Optional field graphics control output**
- **High speed bipolar design**
- **TTL compatible**
- **Compatible with Signetics SCN2672 PVTC, SCN2674 AVDC and SCN2670 DCGG**
- **Upgrade of the Signetics SCB2673 VAC**

APPLICATIONS

- **CRT terminals**
- **Word processing systems**
- **Small business computers**

PIN CONFIGURATION

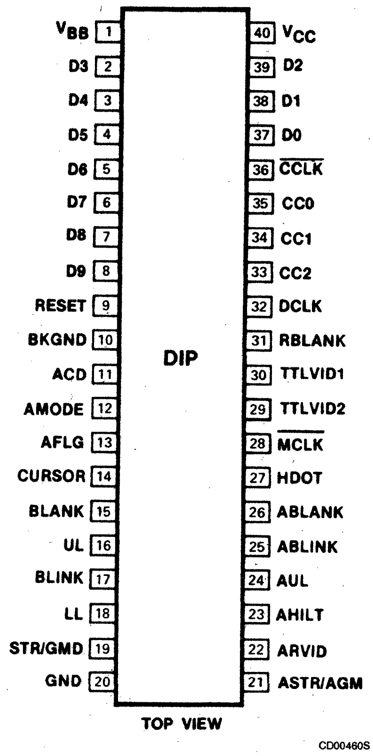
V_{BB} 1
D3 2
D4 3
D5 4
D6 5
D7 6
D8 7
D9 8
RESET 9
BKGND 10
ACD 11
AMODE 12
AFLG 13
CURSOR 14
BLANK 15
UL 16
BLINK 17
LL 18
STR/GMD 19
GND 20
40 V_{CC}
39 D2
38 D1
37 D0
36 $\overline{CCLK}$
35 CC0
34 CC1
33 CC2
32 DCLK
31 RBLANK
30 TTLVID1
29 TTLVID2
28 $\overline{MCLK}$
27 HDOT
26 ABLANK
25 ABLINK
24 AUL
23 AHILT
22 ARVID
21 ASTR/AGM
DIP
TOP VIEW
CD00460S

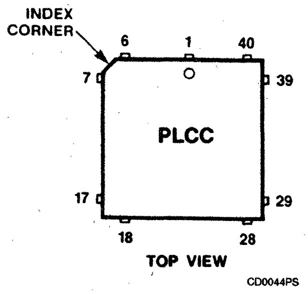
INDEX CORNER
6
1
40
7
39
PLCC
17
29
18
28
TOP VIEW
CD0044PS

Pin	Function	Pin	Function	Pin	Function
1	NC	16	CURSOR	30	$\overline{HDOT}$
2	V_{BB}	17	BLANK	31	$\overline{MCLK}$
3	D3	18	UL	32	TTLVID2
4	D4	19	BLINK	33	TTLVID1
5	D5	20	LL	34	NC
6	D6	21	STR/GMD	35	RBLANK
7	D7	22	GND	36	DCLK
8	D8	23	NC	37	CC2
9	D9	24	ASTR/AGM	38	CC1
10	RESET	25	ARVID	39	$\overline{CC0}$
11	BKGND	26	AHILT	40	$\overline{CCLK}$
12	NC	27	AUL	41	D0
13	ACD	28	ABLINK	42	D1
14	AMODE	29	ABLANK	43	D2
15	AFLG			44	V_{cc}

February 20, 1985

853-0093-77351

Video Attributes Controller (VAC) SCB2677

ORDERING CODE

PACKAGES	$V_{CC} = 5V \pm 5\%$, $T_A = 0°C$ to $70°C$			
	Graphics Attribute		Strike-Thru Attribute	
	25MHz	18MHz	25MHz	18MHz
Ceramic DIP	SCB2677BC5I40	SCB2677BC8I40	SCB2677AC5I40	SCB2677AC8I40
Plastic DIP	SCB2677BC5N40	SCB2677BC8N40	SCB2677AC5N40	SCB2677AC8N40
Plastic LCC	SCB2677BC5A44	SCB2677BC8A44	SCB2677AC5A44	SCB2677AC8A44

BLOCK DIAGRAM

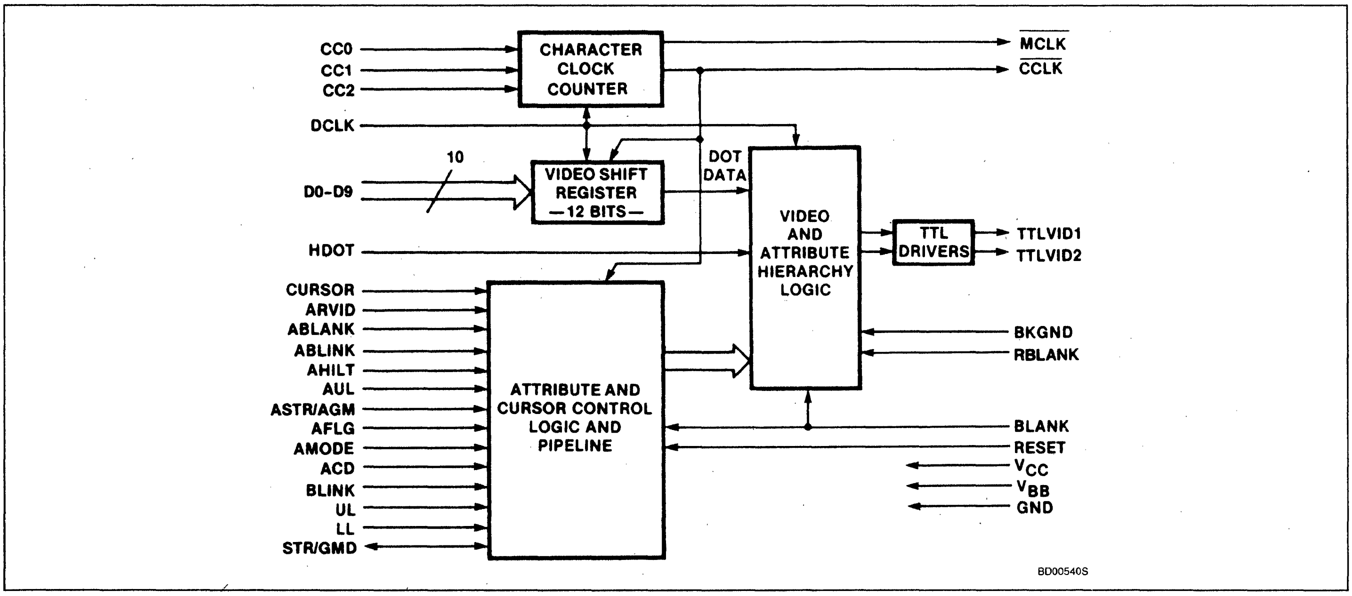
CC0
CC1
CC2
CHARACTER CLOCK COUNTER
MCLK
CCLK
DCLK
10
D0-D9
VIDEO SHIFT REGISTER —12 BITS—
DOT DATA
VIDEO AND ATTRIBUTE HIERARCHY LOGIC
TTL DRIVERS
TTLVID1
TTLVID2
HDOT
CURSOR
ARVID
ABLANK
ABLINK
AHILT
AUL
ASTR/AGM
AFLG
AMODE
ACD
BLINK
UL
LL
STR/GMD
ATTRIBUTE AND CURSOR CONTROL LOGIC AND PIPELINE
BKGND
RBLANK
BLANK
RESET
V_{CC}
V_{BB}
GND
BD00540S

Signetics

SCC80 Series
CMOS Single-Chip 8-Bit Microcontroller

Preliminary Specification

Microprocessor Products

DESCRIPTION

The Signetics SCC80C Series is a family of CMOS, high-performance, single-chip microcontrollers which are functionally-compatible, low-power CMOS versions of the popular NMOS SCN80 Series. Signetics CMOS technology combines the high-speed and density characteristics of HMOS with the low-power attributes of CMOS.

All SCC80C Series devices are pin and program compatible, differing only in the size of the on-board program ROM and data RAM, as follows:

TYPE	RAM SIZE	ROM SIZE
SCC80C48	64 x 8	1K x 8
SCC80C49	128 x 8	2K x 8
SCC80C50	256 x 8	4K x 8
SCC80C35	64 x 8	–
SCC80C39	128 x 8	–
SCC80C40	256 x 8	–

The SCC80C Series devices also provide three 8-bit I/O ports, two test inputs and an interrupt input, for a total of 27 I/O lines. An on-chip, 8-bit timer/counter is provided which can count, under program control, either internal clock pulses (with a divide-by-32 prescaler) or external events. The counter can be programmed to cause an interrupt on terminal count. Systems that require extra capacity can be expanded using CMOS external memories and peripherals.

FEATURES

- **CMOS microcontroller pin compatible with Signetics SCN80 Series**
  - **80C48/80C49/80C50 with ROM**
  - **80C35/80C39/80C40 without ROM**
- **SCC80C48 Series**
  - **1 to 4K ROM**
  - **64 to 256 bytes RAM**
  - **3 x 8-bit I/O ports**
  - **Test and interrupt inputs**
  - **Timer/counter**
- **ROM and RAM expandable with external components**
- **1.36μs instruction cycle @ 11MHz**
  - **All instructions 1 or 2 cycles**
- **Three low-power consumption selections**
  - **Normal operation: 12mA @ 5V, 11MHz**
  - **Idle mode: 5mA @ 5V, 11MHz**
  - **Power down: 2μA @ 2.0V**
- **Low-power applications permit:**
  - **Battery operation**
  - **Reduced cooling requirements**
  - **Maintain operation through power line interruptions**
- **TTL compatible V_{CC} = 5V ±10% CMOS compatible V_{CC} = 5V ±20%**

LOGIC SYMBOL

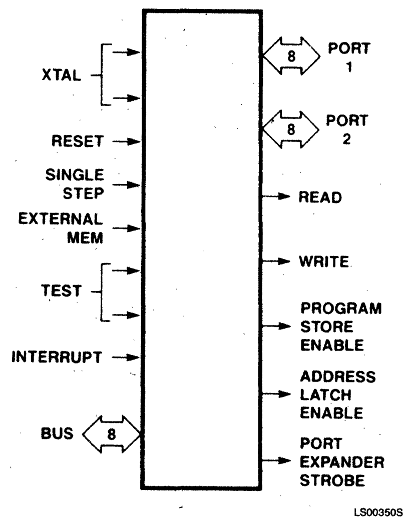
XTAL
RESET
SINGLE STEP
EXTERNAL MEM
TEST
INTERRUPT
BUS
8
PORT 1
8
PORT 2
8
READ
WRITE
PROGRAM STORE ENABLE
ADDRESS LATCH ENABLE
PORT EXPANDER STROBE
LS00350S

PIN CONFIGURATION

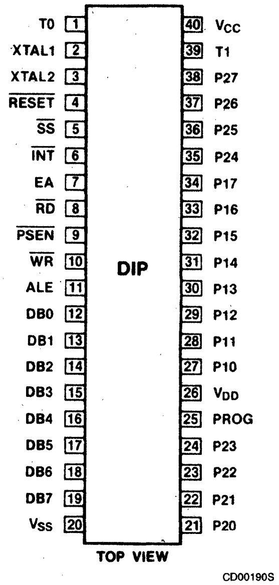
T0 1
XTAL1 2
XTAL2 3
$\overline{RESET}$ 4
$\overline{SS}$ 5
$\overline{INT}$ 6
EA 7
$\overline{RD}$ 8
$\overline{PSEN}$ 9
$\overline{WR}$ 10
ALE 11
DB0 12
DB1 13
DB2 14
DB3 15
DB4 16
DB5 17
DB6 18
DB7 19
V_{SS} 20
40 V_{CC}
39 T1
38 P27
37 P26
36 P25
35 P24
34 P17
33 P16
32 P15
31 P14
30 P13
29 P12
28 P11
27 P10
26 V_{DD}
25 PROG
24 P23
23 P22
22 P21
21 P20
DIP
TOP VIEW
CD00190S

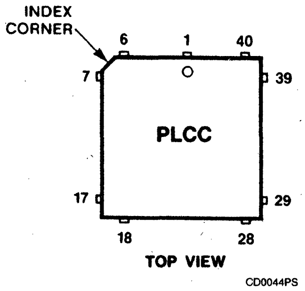
INDEX CORNER
6
1
40
7
39
PLCC
17
29
18
28
TOP VIEW
CD0044PS

Pin	Function	Pin	Function
1	NC	23	NC
2	T0	24	P20
3	XTAL1	25	P21
4	XTAL2	26	P22
5	$\overline{RESET}$	27	P23
6	$\overline{SS}$	28	PROG
7	$\overline{INT}$	29	V_{DD}
8	EA	30	P10
9	$\overline{RD}$	31	P11
10	$\overline{PSEN}$	32	P12
11	$\overline{WR}$	33	P13
12	NC	34	NC
13	ALE	35	P14
14	DB0	36	P15
15	DB1	37	P16
16	DB2	38	P17
17	DB3	39	P24
18	DB4	40	P25
19	DB5	41	P26
20	DB6	42	P27
21	DB7	43	T1
22	V_{SS}	44	V_{CC}

February 20, 1985

FOR COMPLETE DATA SHEET, Call 800-443-0100, Ext. 518

CMOS Single-Chip 8-Bit Microcontroller

SCC80 Series

The CMOS design of the SCC80C Series opens new application areas that require battery operation, low power standby, wider supply voltage ranges, and the ability to maintain operation during AC power line interruptions. The use of cooling fans can be reduced or eliminated, making possible the design of less noisy or sealed equipment. These applications include mobile, portable and hand-held equipment for the automotive, telecommunications, and consumer markets.

IDLE MODE

The 80C48/80C49/80C50, when placed in the idle mode, keeps the oscillator, the internal timer and the external interrupt and counter pins functioning, and maintains the internal register and RAM status.

To place the 80C48/80C49/80C50 in idle mode, a command instruction (op code 01H) is executed. To terminate idle mode, a reset must be performed or interrupts must be enabled and an interrupt signal generated. There are two interrupt sources that can restore normal operation. One is an external signal applied to the interrupt pin. The other is from the overflow of the timer/counter. When either interrupt is invoked, the CPU is taken out of idle mode and vectors to the interrupt's service routine address. Along with the idle mode, the standard 8048 Series power-down mode is still maintained.

BLOCK DIAGRAM

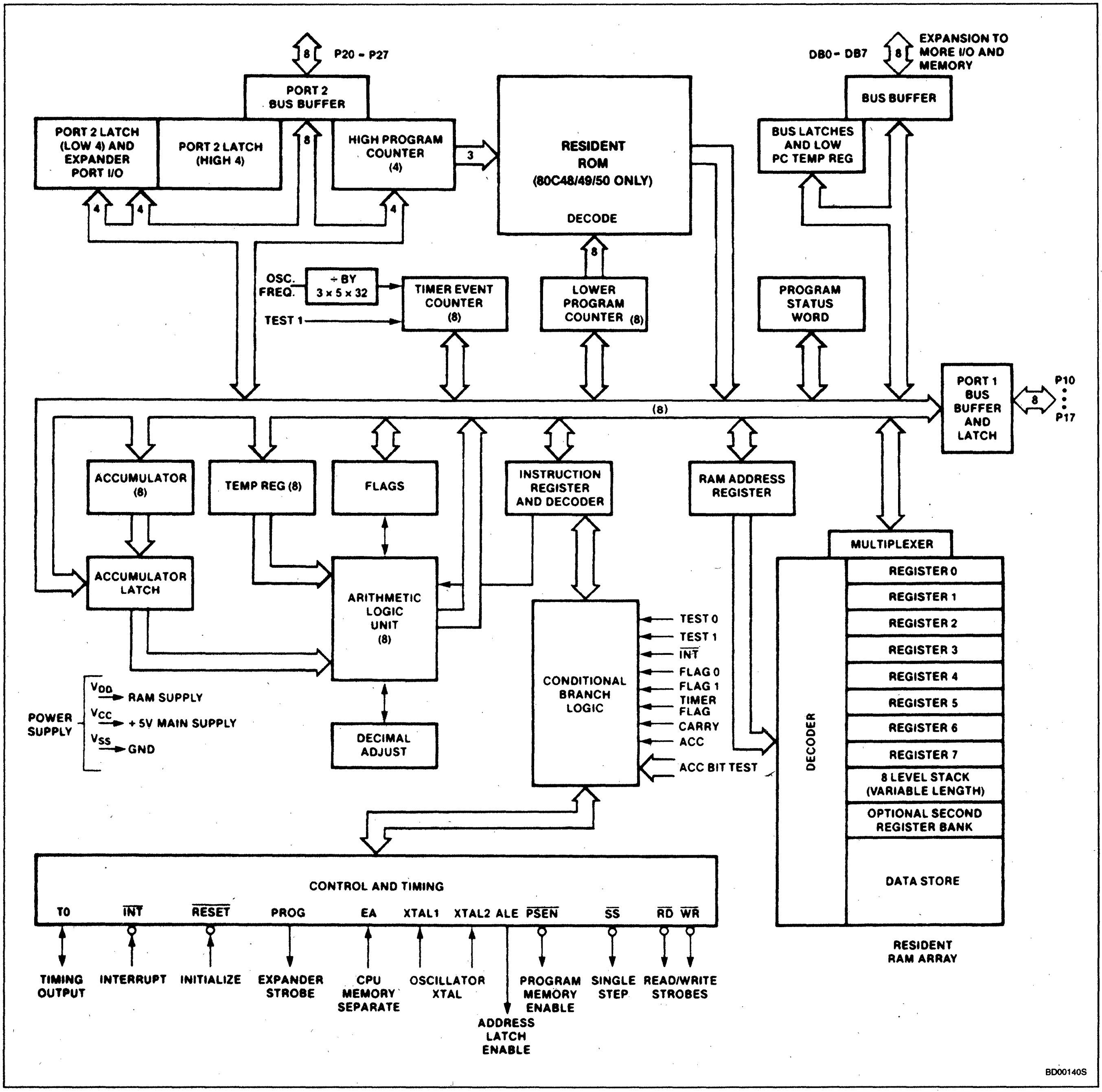
P20 - P27
8
PORT 2 BUS BUFFER
PORT 2 LATCH (LOW 4) AND EXPANDER PORT I/O
PORT 2 LATCH (HIGH 4)
HIGH PROGRAM COUNTER (4)
3
4
RESIDENT ROM (80C48/49/50 ONLY)
DECODE
DB0 - DB7
EXPANSION TO MORE I/O AND MEMORY
BUS BUFFER
BUS LATCHES AND LOW PC TEMP REG
OSC. FREQ.
÷ BY 3 x 5 x 32
TEST 1
TIMER EVENT COUNTER (8)
LOWER PROGRAM COUNTER (8)
PROGRAM STATUS WORD
PORT 1 BUS BUFFER AND LATCH
P10
P17
(8)
ACCUMULATOR (8)
TEMP REG (8)
FLAGS
INSTRUCTION REGISTER AND DECODER
RAM ADDRESS REGISTER
MULTIPLEXER
ACCUMULATOR LATCH
ARITHMETIC LOGIC UNIT (8)
DECIMAL ADJUST
CONDITIONAL BRANCH LOGIC
TEST 0
TEST 1
INT
FLAG 0
FLAG 1
TIMER FLAG
CARRY
ACC
ACC BIT TEST
POWER SUPPLY
VDD RAM SUPPLY
VCC + 5V MAIN SUPPLY
VSS GND
DECODER
REGISTER 0
REGISTER 1
REGISTER 2
REGISTER 3
REGISTER 4
REGISTER 5
REGISTER 6
REGISTER 7
8 LEVEL STACK (VARIABLE LENGTH)
OPTIONAL SECOND REGISTER BANK
DATA STORE
RESIDENT RAM ARRAY
CONTROL AND TIMING
T0
INT
RESET
PROG
EA
XTAL1
XTAL2
ALE
PSEN
SS
RD
WR
TIMING OUTPUT
INTERRUPT
INITIALIZE
EXPANDER STROBE
CPU MEMORY SEPARATE
OSCILLATOR XTAL
ADDRESS LATCH ENABLE
PROGRAM MEMORY ENABLE
SINGLE STEP
READ/WRITE STROBES
BD00140S

Signetics

SCN80 Series
Single Chip 8-Bit Microcontroller

Product Specification

Microprocessor Products

DESCRIPTION

The Signetics SCN80 Series microcontrollers are self-contained, 8-bit processors which contain the system timing, control logic, RAM data memory, ROM program memory (8048/49/50 only), and I/O lines necessary to implement dedicated control functions. All SCN80 Series devices are pin and program compatible, differing only in the size of the on-board program ROM and data RAM, as follows:

TYPE	RAM SIZE	ROM SIZE
SCN8048	64 x 8	1K x 8
SCN8049	128 x 8	2K x 8
SCN8050	256 x 8	4K x 8
SCN8035	64 x 8	—
SCN8039	128 x 8	—
SCN8040	256 x 8	—

Program memory can be expanded externally up to a maximum total of 4K bytes without paging. Data memory can also be expanded externally. I/O capabilities can be expanded using standard devices or the 8243 I/O expander.

The SCN80 Series processors are designed to be efficient control processors as well as arithmetic processors. They provide an instruction set which allows the user to directly set and reset individual lines within its I/O ports as well as test individual bits within the accumulator. A large variety of branch and table look-up instructions make these processors very efficient in implementing standard logic functions. Also, special attention has been given to code efficiency. Over 70% of the instructions are a single byte long and all others are only 2 bytes long.

An on-chip 8-bit counter is provided which can count, under program control, either internal clock pulses (with a divide by 32 prescaler) or external events. The counter can be programmed to cause an interrupt on terminal count.

FEATURES

- **8-bit CPU, ROM, RAM, I/O in a 40-pin package**
- **24 quasi bidirectional I/O lines**
- **Two test inputs**
- **Internal counter/timer**
- **Single-level vectored interrupts: external, counter/timer**
- **Over 90 instructions, 70% single byte**
- **1.36μs or 2.5μs instruction cycle, all instructions one or two cycles**
- **Expandable memory and I/O**
- **Low voltage standby**
- **TTL compatible inputs and outputs**
- **Single +5V power supply**

LOGIC SYMBOL

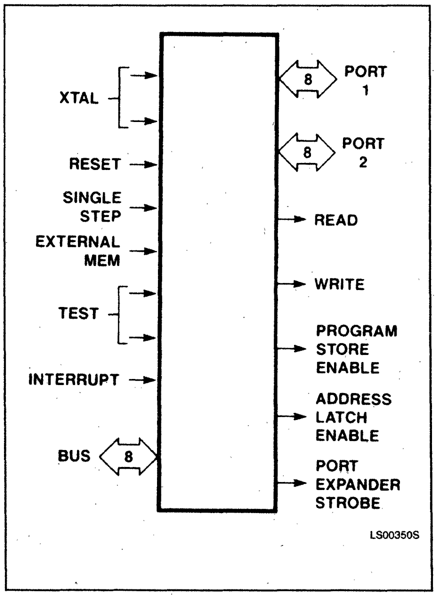
XTAL
RESET
SINGLE STEP
EXTERNAL MEM
TEST
INTERRUPT
BUS
8
PORT 1
8
PORT 2
READ
WRITE
PROGRAM STORE ENABLE
ADDRESS LATCH ENABLE
PORT EXPANDER STROBE
LS00350S

PIN CONFIGURATION

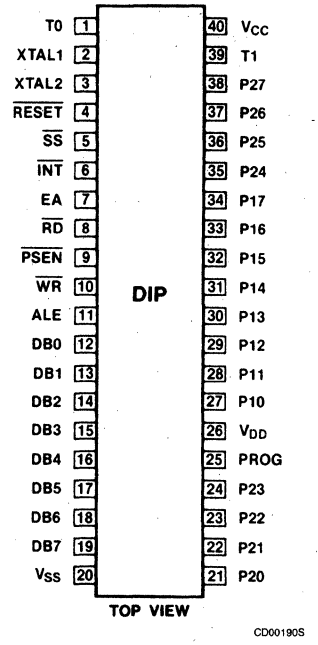
T0 1
XTAL1 2
XTAL2 3
RESET 4
SS 5
INT 6
EA 7
RD 8
PSEN 9
WR 10
ALE 11
DB0 12
DB1 13
DB2 14
DB3 15
DB4 16
DB5 17
DB6 18
DB7 19
VSS 20
40 VCC
39 T1
38 P27
37 P26
36 P25
35 P24
34 P17
33 P16
32 P15
31 P14
30 P13
29 P12
28 P11
27 P10
26 VDD
25 PROG
24 P23
23 P22
22 P21
21 P20
DIP
TOP VIEW
CD00190S

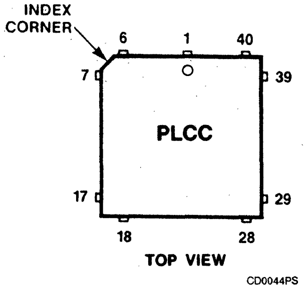
INDEX CORNER
6
1
40
7
39
PLCC
17
29
18
28
TOP VIEW
CD0044PS

Pin	Function	Pin	Function
1	NC	23	NC
2	T0	24	P20
3	XTAL1	25	P21
4	XTAL2	26	P22
5	$\overline{\text{RESET}}$	27	P23
6	$\overline{\text{SS}}$	28	PROG
7	$\overline{\text{INT}}$	29	V_{DD}
8	EA	30	P10
9	$\overline{\text{RD}}$	31	P11
10	$\overline{\text{PSEN}}$	32	P12
11	$\overline{\text{WR}}$	33	P13
12	NC	34	NC
13	ALE	35	P14
14	DB0	36	P15
15	DB1	37	P16
16	DB2	38	P17
17	DB3	39	P24
18	DB4	40	P25
19	DB5	41	P26
20	DB6	42	P27
21	DB7	43	T1
22	V_{SS}	44	V_{CC}

FUNCTIONAL DESCRIPTION

The following is a general functional description of the SCN80 Series microcomputers. Refer to the block diagram.

BLOCK DIAGRAM

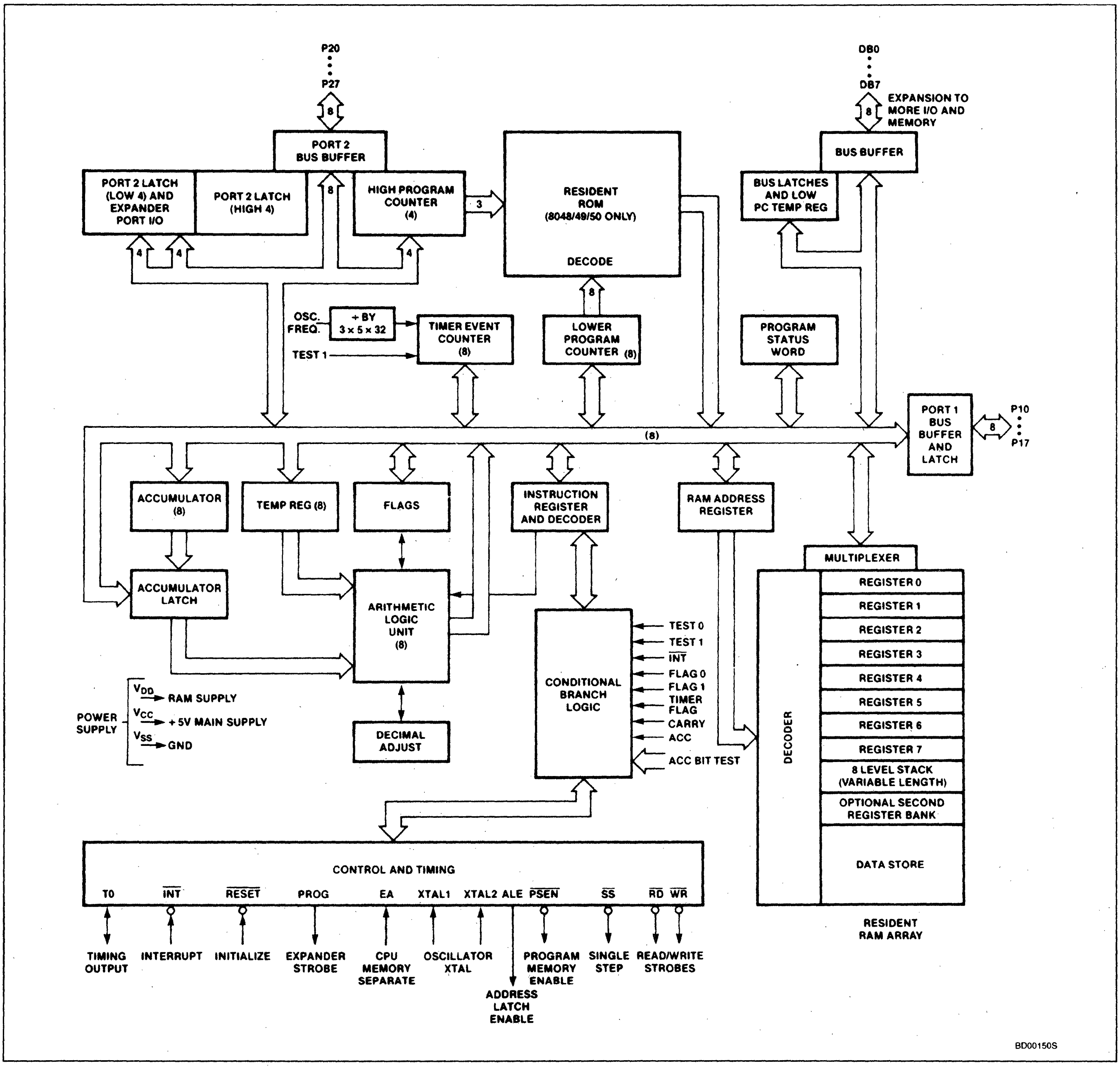
P20
P27
8
PORT 2 BUS BUFFER
DB0
DB7
8
EXPANSION TO MORE I/O AND MEMORY
BUS BUFFER
PORT 2 LATCH (LOW 4) AND EXPANDER PORT I/O
PORT 2 LATCH (HIGH 4)
8
HIGH PROGRAM COUNTER (4)
3
RESIDENT ROM (8048/49/50 ONLY)
DECODE
BUS LATCHES AND LOW PC TEMP REG
4
4
4
8
OSC. FREQ.
÷ BY 3 x 5 x 32
TIMER EVENT COUNTER (8)
TEST 1
LOWER PROGRAM COUNTER (8)
PROGRAM STATUS WORD
PORT 1 BUS BUFFER AND LATCH
P10
8
P17
(8)
ACCUMULATOR (8)
TEMP REG (8)
FLAGS
INSTRUCTION REGISTER AND DECODER
RAM ADDRESS REGISTER
MULTIPLEXER
ACCUMULATOR LATCH
ARITHMETIC LOGIC UNIT (8)
CONDITIONAL BRANCH LOGIC
TEST 0
TEST 1
INT
FLAG 0
FLAG 1
TIMER FLAG
CARRY
ACC
ACC BIT TEST
DECODER
REGISTER 0
REGISTER 1
REGISTER 2
REGISTER 3
REGISTER 4
REGISTER 5
REGISTER 6
REGISTER 7
8 LEVEL STACK (VARIABLE LENGTH)
OPTIONAL SECOND REGISTER BANK
DATA STORE
RESIDENT RAM ARRAY
POWER SUPPLY
V_{DD} RAM SUPPLY
V_{CC} +5V MAIN SUPPLY
V_{SS} GND
DECIMAL ADJUST
CONTROL AND TIMING
T0
INT
RESET
PROG
EA
XTAL1
XTAL2
ALE
PSEN
SS
RD
WR
TIMING OUTPUT
INTERRUPT
INITIALIZE
EXPANDER STROBE
CPU MEMORY SEPARATE
OSCILLATOR XTAL
ADDRESS LATCH ENABLE
PROGRAM MEMORY ENABLE
SINGLE STEP
READ/WRITE STROBES
BD00150S

Signetics

SCN8031AH, SCN8051AH
Single-Chip 8-Bit Microcontroller

Product Specification

Microprocessor Products

DESCRIPTION

The Signetics SCN8031AH/8051AH is a high-performance microcontroller fabricated using Signetics' highly reliable +5V, depletion-load, N-channel, silicon-gate, N500 MOS process technology. It provides the hardware features, architectural enhancements and new instructions that are necessary to make it a powerful and cost-effective controller for applications requiring up to 64K bytes of program memory and/or up to 64K bytes of data storage.

The SCN8051AH contains a 4K x 8 read-only program memory; a 128 x 8 read/write data memory; 32 I/O lines; two 16-bit timer/counters; a five-source, two-priority-level, nested interrupt structure; a serial I/O port for either multi-processor communications, I/O expansion, or full duplex UART; and on-chip oscillator and clock circuits. The SCN8031AH is identical, except that it lacks the program memory. For systems that require extra capability, the SCN8051AH can be expanded using standard TTL compatible memories and byte oriented peripheral controllers.

The SCN8051AH microcontroller, like its SCN8048 predecessor, is efficient both as a controller and as an arithmetic processor. It has extensive facilities for binary and BCD arithmetic and excels in bit-handling capabilities. Efficient use of program memory results from an instruction set consisting of 44% one-byte, 41% two-byte, and 15% three-byte instructions. With a 12MHz crystal, 58% of the instructions execute in 1μs, 40% in 2μs and multiply and divide require only 4μs. Among the many instructions added to the standard SCN8048 instruction set are multiply, divide, subtract, and compare.

FEATURES

- **Reduced supply current**
- **4K x 8 ROM (SCN8051AH)**
- **128 x 8 RAM**
- **Four 8-bit ports, 32 I/O lines**
- **Two 16-bit timer/event counters**
- **High-performance full-duplex serial channel**
- **External memory expandable to 128K**
- **Boolean processor**
- **SCN80 series architecture enhanced with:**
  - **Non-paged jumps**
  - **Direct addressing**
  - **Four 8-register banks**
  - **Stack depth up to 128-bytes**
  - **Multiply, divide, subtract, compare**
- **Most instructions execute in 1μs**
- **4μs multiply and divide**

LOGIC SYMBOL

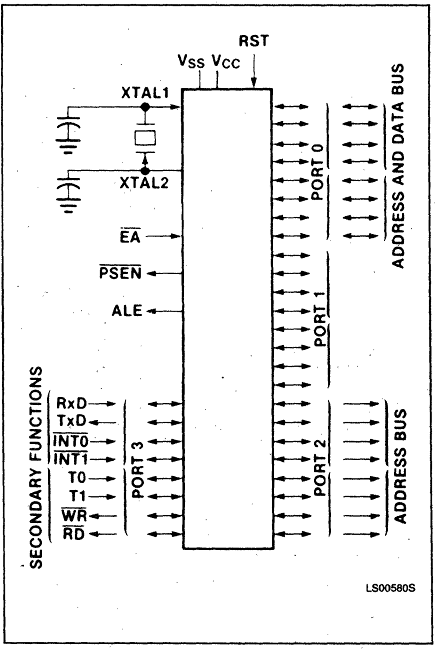
RST
VSS VCC
XTAL1
XTAL2
$\overline{EA}$
$\overline{PSEN}$
ALE
PORT 0
PORT 1
PORT 2
PORT 3
ADDRESS AND DATA BUS
ADDRESS BUS
SECONDARY FUNCTIONS
RxD
TxD
$\overline{INT0}$
$\overline{INT1}$
T0
T1
$\overline{WR}$
$\overline{RD}$
LS00580S

PIN CONFIGURATION

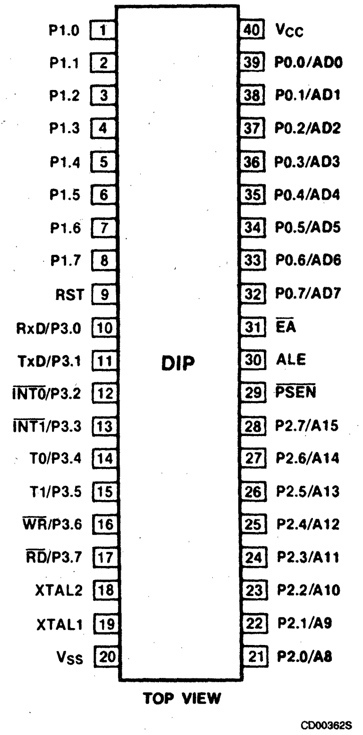
P1.0 1
P1.1 2
P1.2 3
P1.3 4
P1.4 5
P1.5 6
P1.6 7
P1.7 8
RST 9
RxD/P3.0 10
TxD/P3.1 11
$\overline{INT0}$/P3.2 12
$\overline{INT1}$/P3.3 13
T0/P3.4 14
T1/P3.5 15
$\overline{WR}$/P3.6 16
$\overline{RD}$/P3.7 17
XTAL2 18
XTAL1 19
Vss 20
40 Vcc
39 P0.0/AD0
38 P0.1/AD1
37 P0.2/AD2
36 P0.3/AD3
35 P0.4/AD4
34 P0.5/AD5
33 P0.6/AD6
32 P0.7/AD7
31 $\overline{EA}$
30 ALE
29 $\overline{PSEN}$
28 P2.7/A15
27 P2.6/A14
26 P2.5/A13
25 P2.4/A12
24 P2.3/A11
23 P2.2/A10
22 P2.1/A9
21 P2.0/A8
DIP
TOP VIEW
CD00362S

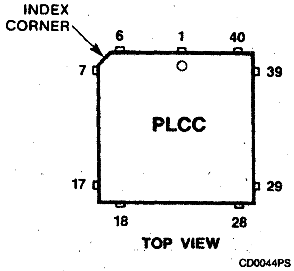
INDEX CORNER
6
1
40
7
39
PLCC
17
29
18
28
TOP VIEW
CD0044PS

Pin	Function	Pin	Function
1	NC	23	NC
2	P1.0	24	A8/P2.0
3	P1.1	25	A9/P2.1
4	P1.2	26	A10/P2.2
5	P1.3	27	A11/P2.3
6	P1.4	28	A12/P2.4
7	P1.5	29	A13/P2.5
8	P1.6	30	A14/P2.6
9	P1.7	31	A15/P2.7
10	RST	32	$\overline{PSEN}$
11	RxD/P3.0	33	ALE
12	NC	34	NC
13	TxD/P3.1	35	$\overline{EA}$
14	$\overline{INT0}$/P3.2	36	AD7/P0.7
15	$\overline{INT1}$/P3.3	37	AD6/P0.6
16	T0/P3.4	38	AD5/P0.5
17	T1/P3.5	39	AD4/P0.4
18	$\overline{WR}$/P3.6	40	AD3/P0.3
19	$\overline{RD}$/P3.7	41	AD2/P0.2
20	XTAL2	42	AD1/P0.1
21	XTAL1	43	AD0/P0.0
22	V_{SS}	44	V_{CC}

February 20, 1985

Single-Chip 8-Bit Microcontroller

SCN8031AH, SCN8051AH

ORDERING CODE

SCN80□□ H □ □ □ 40 (CPxxxx)

ROM/RAM (bytes)
31 = EXT/128
51 = 4K/128

POWER CONSUMPTION
H = Reduced Power AH

OPERATING TEMPERATURE RANGE
A = −40°C to +85°C
C = 0°C to +70°C

SPEED
C = 12MHz clock

CUSTOM ROM PATTERN NUMBER
Applies to masked ROM versions only. Number will be assigned by Signetics. Contact Signetics sales office for ROM pattern submission requirements.

40-PIN DIP
44-PIN PLCC

PACKAGE
N = Plastic DIP
I = Ceramic DIP
A = Plastic LCC

BLOCK DIAGRAM

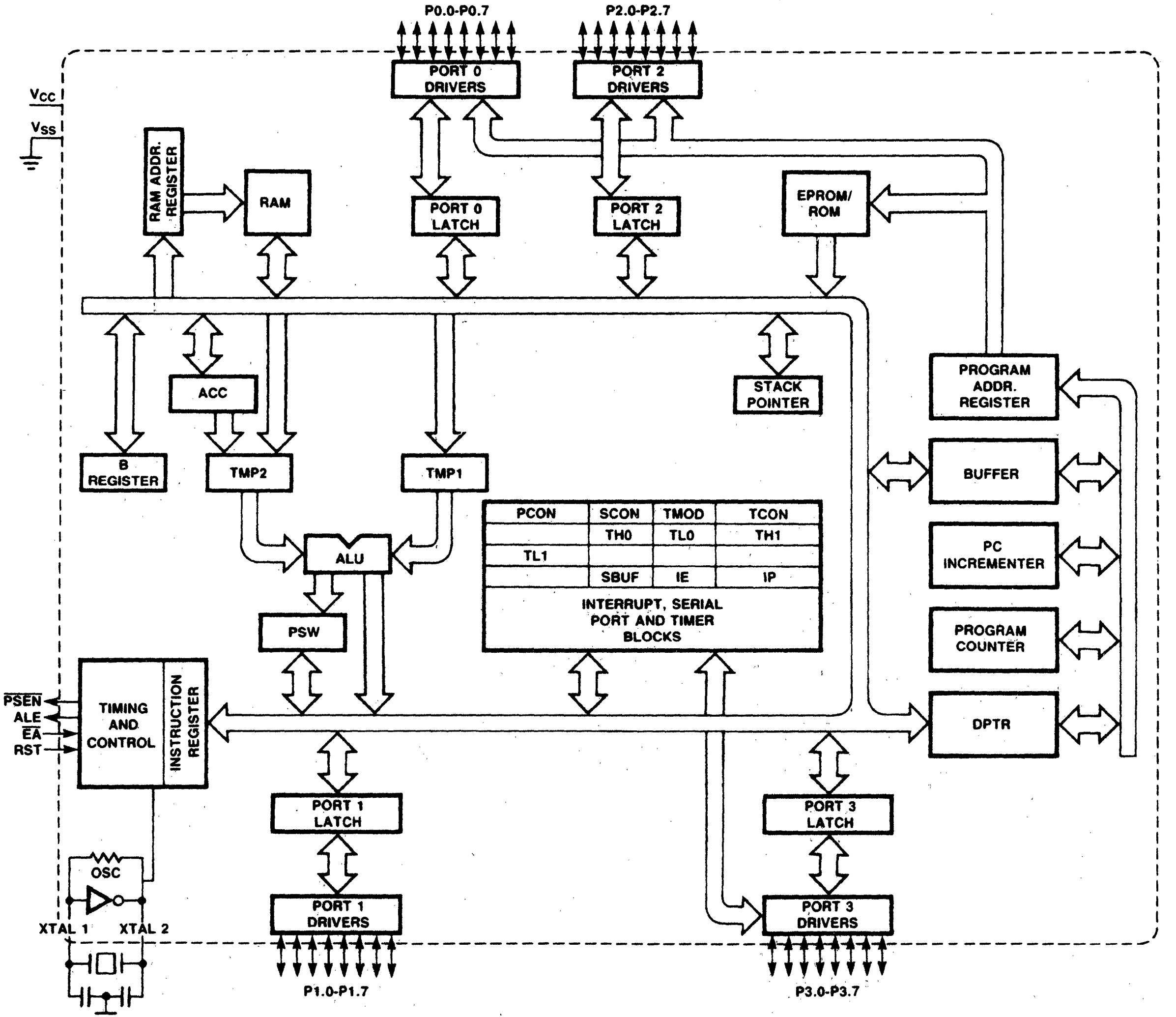
P0.0-P0.7
P2.0-P2.7
PORT 0 DRIVERS
PORT 2 DRIVERS
VCC
VSS
RAM ADDR. REGISTER
RAM
PORT 0 LATCH
PORT 2 LATCH
EPROM/ ROM
STACK POINTER
PROGRAM ADDR. REGISTER
ACC
B REGISTER
TMP2
TMP1
BUFFER
PCON
SCON
TMOD
TCON
TH0
TL0
TH1
TL1
SBUF
IE
IP
INTERRUPT, SERIAL PORT AND TIMER BLOCKS
ALU
PC INCREMENTER
PSW
PROGRAM COUNTER
PSEN
ALE
EA
RST
TIMING AND CONTROL
INSTRUCTION REGISTER
DPTR
PORT 1 LATCH
PORT 3 LATCH
OSC
XTAL 1
XTAL 2
PORT 1 DRIVERS
PORT 3 DRIVERS
P1.0-P1.7
P3.0-P3.7
BD00200S

Signetics

SCC80C31, SCC80C51
CMOS Single-Chip 8-Bit Microcontroller

Advance Information

Microprocessor Products

DESCRIPTION

The Signetics SCC80C31/SCC80C51 is a high-performance microcontroller fabricated with Signetics' high-density CMOS technology. The CMOS 80C31/80C51 is functionally compatible with the NMOS 8031/8051 microcontroller. The Signetics CMOS technology combines the high speed and density characteristics of HMOS with the low power attributes of CMOS.

The SCC80C31/SCC80C51 contains a 4K x 8 ROM; a 128 x 8 RAM; 32 I/O lines; two 16-bit timer/counters; a five-source, two-priority level, nested interrupt structure; a serial I/O port for either multiprocessor communications, I/O expansion or full duplex UART; and on-chip oscillator and clock circuits. In addition, the 80C31/80C51 has two software selectable modes of reduced activity for further power reduction – idle and power down.

Idle mode freezes the CPU while allowing the RAM, timers, serial port, and interrupt system to continue functioning. Power-down mode saves the RAM contents but freezes the oscillator, causing all other chip functions to be inoperative.

FEATURES

- **80C31 microcontroller without ROM**
- **80C51 control-oriented microcontroller**
- **8031/8051 compatible**
  - **4K x 8 ROM**
  - **128 x 8 RAM**
  - **Two 16-bit timer/counters**
  - **Full duplex serial channel**
  - **Boolean processor**
- **Memory addressing capability**
  - **64K ROM and 64K RAM**
- **Lower power consumption:**
  - **Normal operation: 24mA @ 5V, 12MHz**
  - **Idle mode: 3mA @ 5V, 12MHz**
  - **Power-down mode: 50μA @ 2V**
- **CMOS and TTL compatible**

LOGIC SYMBOL

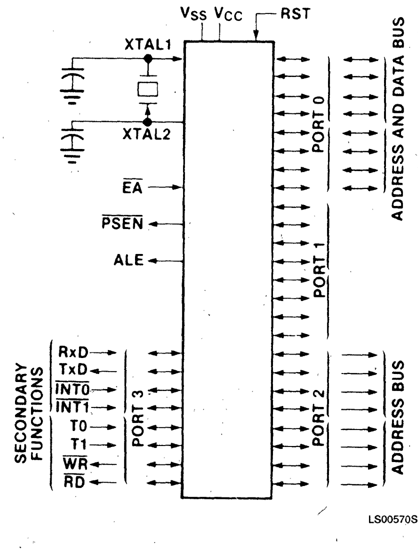
V_SS V_CC
RST
XTAL1
XTAL2
EA
PSEN
ALE
PORT 0
ADDRESS AND DATA BUS
PORT 1
SECONDARY FUNCTIONS
RxD
TxD
INT0
INT1
T0
T1
WR
RD
PORT 3
PORT 2
ADDRESS BUS
LS00570S

PIN CONFIGURATION

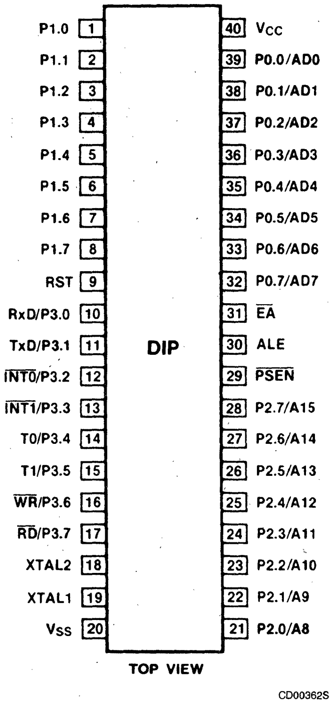
P1.0 1
P1.1 2
P1.2 3
P1.3 4
P1.4 5
P1.5 6
P1.6 7
P1.7 8
RST 9
RxD/P3.0 10
TxD/P3.1 11
INT0/P3.2 12
INT1/P3.3 13
T0/P3.4 14
T1/P3.5 15
WR/P3.6 16
RD/P3.7 17
XTAL2 18
XTAL1 19
Vss 20
40 Vcc
39 P0.0/AD0
38 P0.1/AD1
37 P0.2/AD2
36 P0.3/AD3
35 P0.4/AD4
34 P0.5/AD5
33 P0.6/AD6
32 P0.7/AD7
31 EA
30 ALE
29 PSEN
28 P2.7/A15
27 P2.6/A14
26 P2.5/A13
25 P2.4/A12
24 P2.3/A11
23 P2.2/A10
22 P2.1/A9
21 P2.0/A8
DIP
TOP VIEW
CD00362S

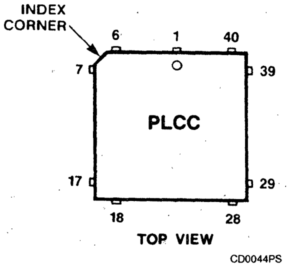
INDEX CORNER
6
1
40
7
39
PLCC
17
29
18
28
TOP VIEW
CD0044PS

Pin	Function	Pin	Function
1	NC	23	NC
2	P1.0	24	A8/P2.0
3	P1.1	25	A9/P2.1
4	P1.2	26	A10/P2.2
5	P1.3	27	A11/P2.3
6	P1.4	28	A12/P2.4
7	P1.5	29	A13/P2.5
8	P1.6	30	A14/P2.6
9	P1.7	31	A15/P2.7
10	RST	32	PSEN
11	RxD/P3.0	33	ALE
12	NC	34	NC
13	TxD/P3.1	35	EA
14	$\overline{\text{INT0}}$/P3.2	36	P0.7/AD7
15	$\overline{\text{INT1}}$/P3.3	37	P0.6/AD6
16	T0/P3.4	38	P0.5/AD5
17	T1/P3.5	39	P0.4/AD4
18	$\overline{\text{WR}}$/P3.6	40	P0.3/AD3
19	$\overline{\text{RD}}$/P3.7	41	P0.2/AD2
20	XTAL2	42	P0.1/AD1
21	XTAL1	43	P0.0/AD0
22	V_{SS}	44	V_{CC}

February 20, 1985

CMOS Single-Chip 8-Bit Microcontroller

SCC80C31, SCC80C51

ORDERING CODE

SCC80C□□ A □ □ □ 40 (CPxxxx)

ROM/RAM (bytes)
31 = EXT/128
51 = 4K/128

OPERATING TEMPERATURE RANGE
C = 0°C to +70°C

SPEED
C = 12MHz clock

CUSTOM ROM PATTERN NUMBER
Applies to masked ROM versions only. Number will be assigned by Signetics. Contact Signetics sales office for ROM pattern submission requirements.

40-Pin DIP
44-Pin LCC

PACKAGE
N = Plastic DIP
I = Ceramic DIP
A = Plastic LCC

BLOCK DIAGRAM

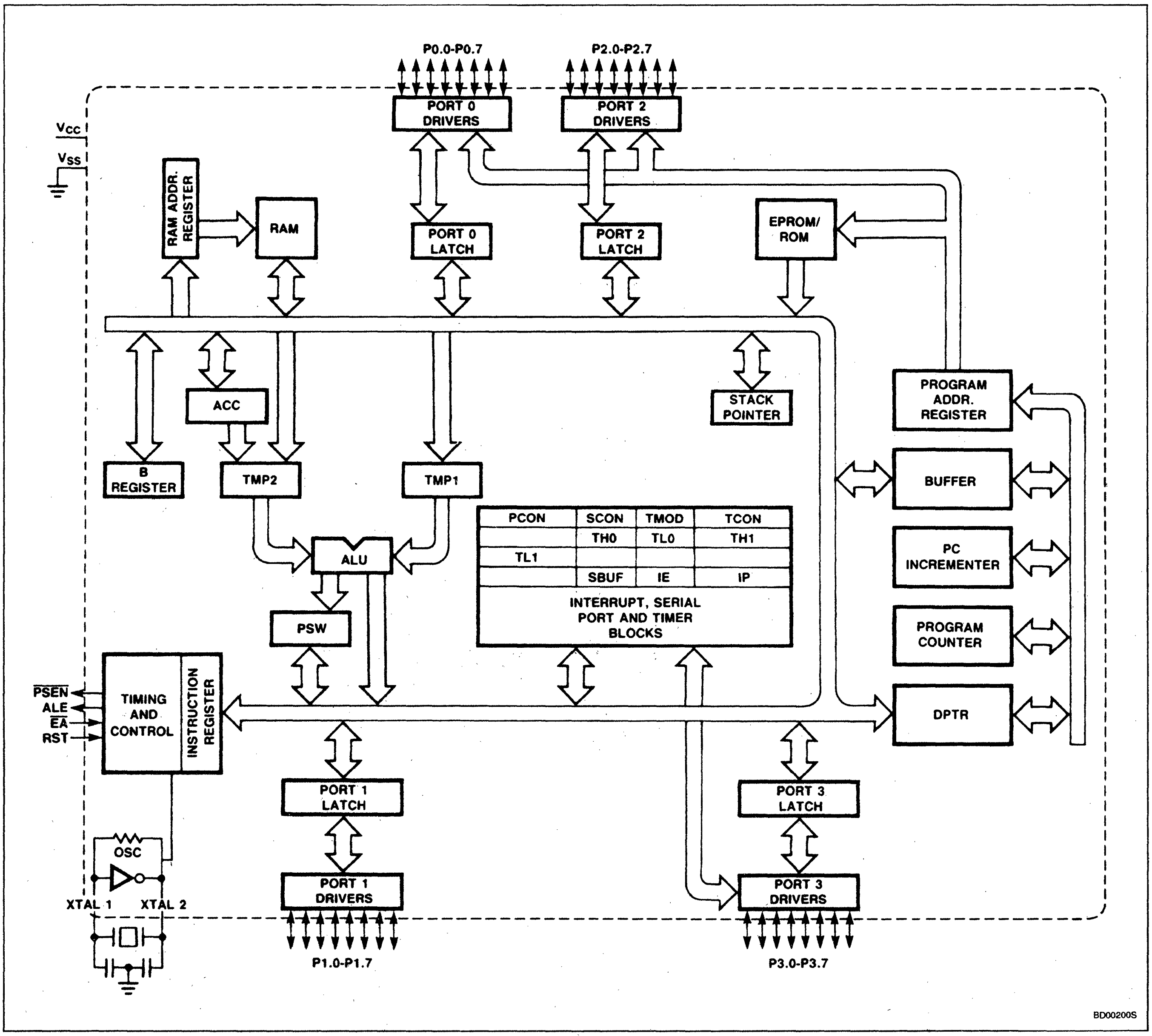
P0.0-P0.7
P2.0-P2.7
PORT 0 DRIVERS
PORT 2 DRIVERS
Vcc
Vss
RAM ADDR. REGISTER
RAM
PORT 0 LATCH
PORT 2 LATCH
EPROM/ROM
ACC
STACK POINTER
PROGRAM ADDR. REGISTER
B REGISTER
TMP2
TMP1
BUFFER
PCON
SCON
TMOD
TCON
TH0
TL0
TH1
TL1
SBUF
IE
IP
INTERRUPT, SERIAL PORT AND TIMER BLOCKS
ALU
PC INCREMENTER
PSW
PROGRAM COUNTER
PSEN
ALE
EA
RST
TIMING AND CONTROL
INSTRUCTION REGISTER
DPTR
PORT 1 LATCH
PORT 3 LATCH
OSC
XTAL 1
XTAL 2
PORT 1 DRIVERS
PORT 3 DRIVERS
P1.0-P1.7
P3.0-P3.7
BD00200S

Signetics

SCC84C Series
CMOS Single Chip 8-Bit Microcontroller

Advance Information

Microprocessor Products

DESCRIPTION

The Signetics SCC84C series of CMOS microcontrollers feature a serial interface supporting both the Inter Integrated Circuit (I^2C) protocol and the nine bit asynchronous protocol (NBAP). The I^2C protocol permits microcontrollers to be connected to each other and to their peripherals using only two wires; this is in contrast to the 16 or more wires normally required by a parallel interface between a microcontroller and its peripheral integrated circuits. The I^2C protocol is a multiple master protocol that permits communication at data rates up to 100K bits per second. A full series of peripheral integrated circuits featuring the I^2C bus are available from Signetics which includes EEPROMs, RAMs, display drivers, parallel I/O ports, power switches, tuning and various television circuits. The SCC84C series employs the industry standard 8048 instruction set and is fabricated using Signetics' high performance CMOS technology. Two power saving modes of operation are available that provide even greater power savings than normal CMOS technology. The serial bus interface permits the SCC84C series to be packaged in space saving 28-pin packages.

All SCC84 C series devices are pin and program compatible, differing only in the size of the on-board program ROM and data RAM. The SCC84C00 is a piggyback version intended for program development and features an IC socket on top to accommodate a 2732A or 2764 EPROM.

TYPE	RAM SIZE	ROM SIZE
SCC84C00	256x8	0
SCC84C20	128x8	2Kx8
SCC84C40	256x8	4Kx8

The SCC84C series also provides two 8-bit I/O ports, a 5-bit I/O port, one test and an interrupt input for a total of 23 I/O lines. An on-chip 8-bit timer/counter is provided which can count, under program control, either internal clock pulses (with a divide by 2 or 32 prescaler) or external events. The counter can be programmed to cause an interrupt on terminal count.

FEATURES

- **Inter IC (I^2C) serial bus interface**
  - **2 wire interface to peripherals**
  - **Multiple master control**
  - **Compatible with I^2C peripherals**
  - **Also supports nine bit async protocol (NBAP)**
- **SCC84C series hardware features**
  - **8048 instruction set and CPU**
  - **ROM memory to 4K bytes**
  - **RAM memory to 256 bytes**
  - **21 quasi-bidirectional I/O lines**
  - **Test and interrupt inputs**
  - **8-bit timer/counter with 5-bit prescaler**
  - **Serial bus interface I^2C/NBAP**
- **Three low power operating levels**
  - **Normal operation: 20Ma @ 5V, 12MHz**
  - **Idle mode: 6Ma @ 5V, 12MHz**
  - **Stop: 0.002Ma @ 2V**
- **TTL operation @ $V_{CC} = 5V \pm 10\%$**
- **CMOS operation @ $V_{CC} = 5V \pm 20\%$**
- **1.25μsec instruction cycle time at 12MHz; all instructions 1 or 2 cycles**
- **On chip oscillator for crystal, ceramic resonator or inductor**
- **Space saving 28-pin package**

PIN CONFIGURATION

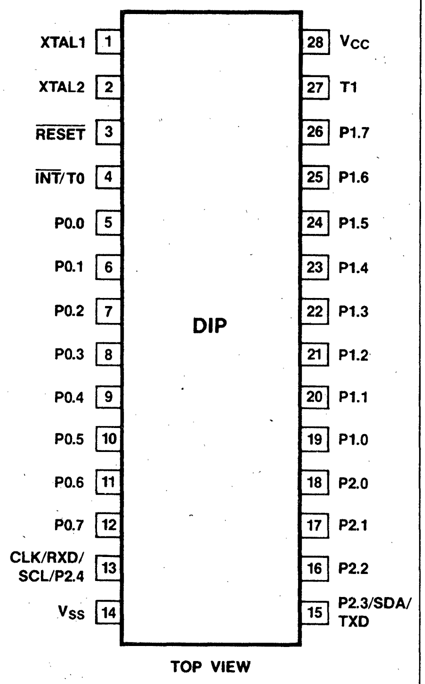

TOP VIEW

CD00970S

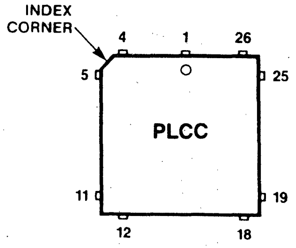

TOP VIEW

CD0028PS

February 20, 1985

FOR COMPLETE DATA SHEET, Call 800-443-0100, Ext. 518

CMOS Single Chip 8-Bit Microcontroller

SCC84C Series

ORDERING CODE

SCC84C□□ A □ □ □ 28 (CPxxxx)

ROM/RAM (bytes)
20 = 2K/128
40 = 4K/256

OPERATING TEMPERATURE RANGE
C = 0°C to+70°C

SPEED
C = 12MHz clock

CUSTOM ROM PATTERN NUMBER
Applies to masked ROM versions only. Number will be assigned by Signetics. Contact Signetics sales office for ROM pattern submission requirements.

28-Pin DIP

PACKAGE
N = Plastic DIP
I = Ceramic DIP
A = Plastic LCC

BLOCK DIAGRAM

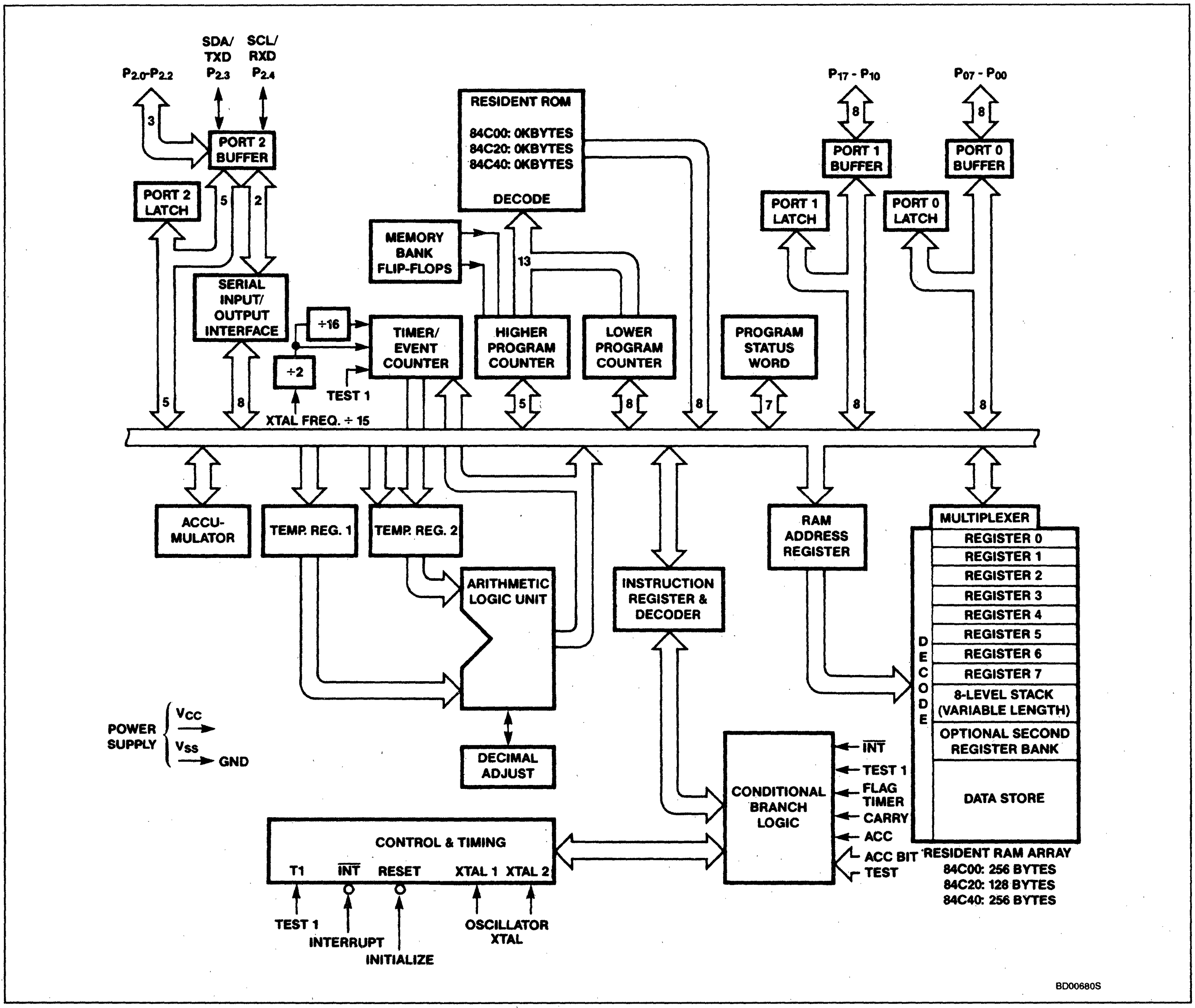
SDA/ TXD $P_{2.3}$
SCL/ RXD $P_{2.4}$
$P_{2.0}$-$P_{2.2}$
3
PORT 2 BUFFER
PORT 2 LATCH
5
2
SERIAL INPUT/ OUTPUT INTERFACE
÷16
÷2
TIMER/ EVENT COUNTER
TEST 1
XTAL FREQ. ÷ 15
5
8
RESIDENT ROM
84C00: 0KBYTES
84C20: 0KBYTES
84C40: 0KBYTES
DECODE
MEMORY BANK FLIP-FLOPS
13
HIGHER PROGRAM COUNTER
LOWER PROGRAM COUNTER
5
8
8
PROGRAM STATUS WORD
7
P_{17} - P_{10}
8
PORT 1 BUFFER
PORT 1 LATCH
8
P_{07} - P_{00}
8
PORT 0 BUFFER
PORT 0 LATCH
8
ACCU- MULATOR
TEMP. REG. 1
TEMP. REG. 2
ARITHMETIC LOGIC UNIT
DECIMAL ADJUST
INSTRUCTION REGISTER & DECODER
RAM ADDRESS REGISTER
MULTIPLEXER
REGISTER 0
REGISTER 1
REGISTER 2
REGISTER 3
REGISTER 4
REGISTER 5
REGISTER 6
REGISTER 7
8-LEVEL STACK (VARIABLE LENGTH)
OPTIONAL SECOND REGISTER BANK
DATA STORE
DECODE
RESIDENT RAM ARRAY
84C00: 256 BYTES
84C20: 128 BYTES
84C40: 256 BYTES
POWER SUPPLY
V_{CC}
V_{SS}
GND
CONDITIONAL BRANCH LOGIC
$\overline{INT}$
TEST 1
FLAG
TIMER
CARRY
ACC
ACC BIT
TEST
CONTROL & TIMING
T1
$\overline{INT}$
RESET
XTAL 1
XTAL 2
TEST 1
INTERRUPT
INITIALIZE
OSCILLATOR XTAL
BD00680S

Signetics

SCN68000
16-/32-Bit Microprocessor

Product Specification

Microprocessor Products

DESCRIPTION

The SCN68000 is the first implementation of the S68000 16/32 bit microprocessor architecture. The SCN68000 has a 16-bit data bus and 24-bit address bus, while the full architecture provides for 32-bit address and data buses. It is completely code-compatible with the SCN68008 8-bit data bus implementation of the S68000 and is downward code-compatible with the SCN68010 virtual extension and the SCN68020 32-bit implementation of the architecture. Any user-mode programs written using the SCN68000 instruction set will run unchanged on the SCN68008, SCN68010, and 68020. This is possible because the user programming model is identical for all four processors and the instruction sets are proper sub-sets of the complete architecture.

The SCN68000 possesses an asynchronous bus structure with a 24-bit address bus and a 16-bit data bus.

The resources available to the SCN68000 user consist of the following:

- 17 32-bit data and address registers
- 16 megabyte direct addressing range
- 56 powerful instruction types
- Operations on five main data types
- Memory mapped I/O
- 14 addressing modes

As shown in the programming model (figure 1), the SCN68000 offers sixteen 32-bit registers and a 32-bit program counter. The first eight registers (D0 – D7) are used as data registers for byte (8-bit), word (16-bit), and long word (32-bit) operations. The second set of seven registers (A0 – A6) and the user stack pointer (USP) may be used as software stack pointers and base address registers. In addition, the registers may be used for word and long word operations. All of the 16 registers may be used as index registers.

PIN CONFIGURATION

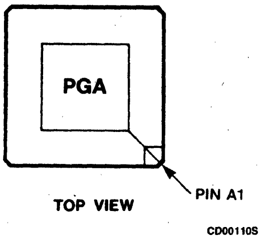
PGA
PIN A1
TOP VIEW
CD00110S

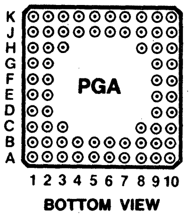
K
J
H
G
F
E
D
C
B
A
PGA
1 2 3 4 5 6 7 8 9 10
BOTTOM VIEW
CD00101S

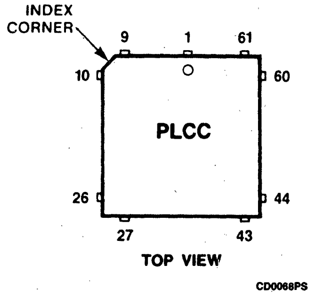
INDEX CORNER
9
1
61
10
60
PLCC
26
44
27
43
TOP VIEW
CD0068PS

PLCC	Function	PLCC	Function	PGA	Function	PGA	Function
1	D4	35	A4	A1	NC	F1	$\overline{HALT}$
2	D3	36	A5	A2	AS	F2	$\overline{RESET}$
3	D2	37	A6	A3	D1	F9	A18
4	D1	38	A7	A4	D2	F10	A19
5	D0	39	A8	A5	D4	G1	$\overline{VMA}$
6	AS	40	A9	A6	D5	G2	$\overline{VPA}$
7	$\overline{UDS}$	41	A10	A7	D7	G9	A15
8	$\overline{LDS}$	42	A11	A8	D8	G10	A17
9	R/$\overline{W}$	43	A12	A9	D10	H1	E
10	$\overline{DTACK}$	44	A13	A10	D12	H2	$\overline{IPL2}$
11	$\overline{BG}$	45	A14	B1	$\overline{DTACK}$	H3	$\overline{IPL1}$
12	$\overline{BGACK}$	46	A15	B2	$\overline{LDS}$	H8	A13
13	$\overline{BR}$	47	A16	B3	$\overline{UDS}$	H9	A12
14	V_{CC}	48	A17	B4	D0	H10	A16
15	CLK	49	A18	B5	D3	J1	$\overline{BERR}$
16	GND	50	A19	B6	D6	J2	$\overline{IPL0}$
17	GND	51	A20	B7	D9	J3	FC1
18	NC	52	V_{CC}	B8	D11	J4	NC
19	$\overline{HALT}$	53	A21	B9	D13	J5	A2
20	$\overline{RESET}$	54	A22	B10	D15	J6	A5
21	$\overline{VMA}$	55	A23	C1	$\overline{BGACK}$	J7	A8
22	E	56	GND	C2	$\overline{BG}$	J8	A10
23	$\overline{VPA}$	57	GND	C3	R/$\overline{W}$	J9	A11
24	$\overline{BERR}$	58	D15	C8	D13	J10	A14
25	$\overline{IPL2}$	59	D14	C9	A23	K1	NC
26	$\overline{IPL1}$	60	D13	C10	A22	K2	FC2
27	$\overline{IPL0}$	61	D12	D1	$\overline{BR}$	K3	FC0
28	FC2	62	D11	D2	V_{CC}	K4	A1
29	FC1	63	D10	D9	V_{SS}	K5	A3
30	FC0	64	D9	D10	A21	K6	A4
31	NC	65	D8	E1	CLK	K7	A6
32	A1	66	D7	E2	V_{SS}	K8	A7
33	A2	67	D6	E9	V_{CC}	K9	A9
34	A3	68	D5	E10	A20	K10	NC

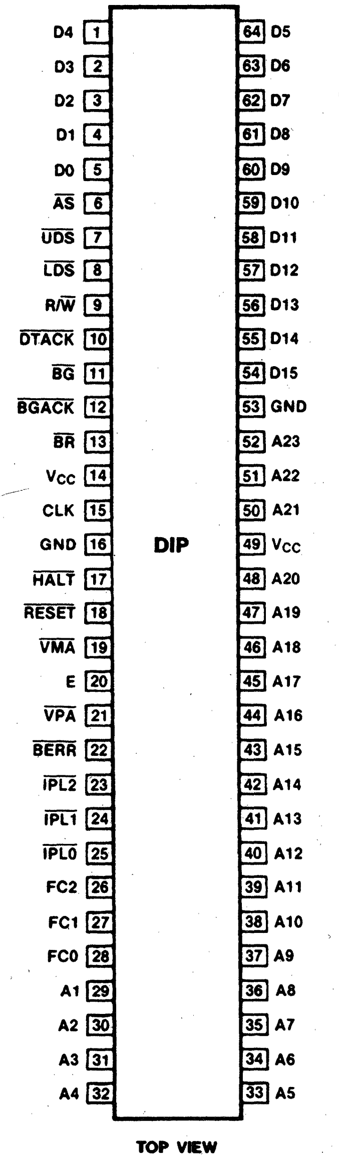
D4 1
D3 2
D2 3
D1 4
D0 5
AS 6
UDS 7
LDS 8
R/W 9
DTACK 10
BG 11
BGACK 12
BR 13
Vcc 14
CLK 15
GND 16
HALT 17
RESET 18
VMA 19
E 20
VPA 21
BERR 22
IPL2 23
IPL1 24
IPL0 25
FC2 26
FC1 27
FC0 28
A1 29
A2 30
A3 31
A4 32
64 D5
63 D6
62 D7
61 D8
60 D9
59 D10
58 D11
57 D12
56 D13
55 D14
54 D15
53 GND
52 A23
51 A22
50 A21
49 Vcc
48 A20
47 A19
46 A18
45 A17
44 A16
43 A15
42 A14
41 A13
40 A12
39 A11
38 A10
37 A9
36 A8
35 A7
34 A6
33 A5
DIP

TOP VIEW

cd00330S

Signetics

SCN68010
16-Bit Virtual Memory Microprocessor

Preliminary Specification

Microprocessor Products

DESCRIPTION

The SCN68010 is the third member of a family of advanced microprocessors from Signetics. Utilizing VLSI technology, the SCN68010 is a fully-implemented 16-bit microprocessor with 32-bit registers, a rich basic instruction set, and versatile addressing modes.

The SCN68010 is fully object code compatible with the earlier members of the S68000 family and has the added features of virtual memory support and enhanced instruction execution timing.

The SCN68010 possesses an asynchronous bus structure with a 24-bit address bus and a 16-bit data bus.

The resources available to the SCN68010 user consist of the following:

- 17 32-bit data and address registers
- 16-megabyte direct addressing range
- Virtual memory/machine support
- 57 powerful instruction types
- High performance looping instructions
- Operations on five main data types
- Memory mapped I/O
- 14 addressing modes

As shown in the programming model (figures 1 and 2), the SCN68010 offers 17 32-bit general purpose registers, a 32-bit program counter, a 16-bit status register, a 32-bit vector base register, and two 3-bit alternate function code registers. The first eight registers (D0 - D7) are used as data registers for byte (8-bit), word (16-bit), and long word (32-bit) operations. The second set of seven registers (A0 - A6) and the stack pointers (SSP, USP) may be used as software stack pointers and base address registers. In addition, the address registers may be used for word and long word operations. All of the 17 registers may be used as index registers.

PIN CONFIGURATION

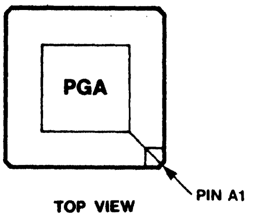
PGA
PIN A1
TOP VIEW

cd00110S

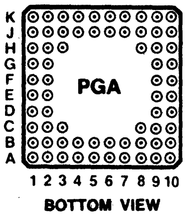
K
J
H
G
F
E
D
C
B
A
PGA
1 2 3 4 5 6 7 8 9 10
BOTTOM VIEW

CD00101S

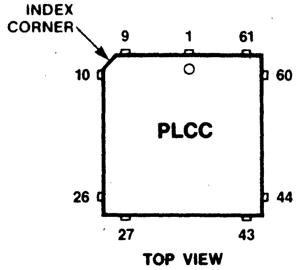
INDEX CORNER
9
1
61
10
60
PLCC
26
44
27
43
TOP VIEW

CD0068PS

PLCC	Function	PLCC	Function	PGA	Function	PGA	Function
1	D4	35	A4	A1	NC	F1	$\overline{\text{HALT}}$
2	D3	36	A5	A2	AS	F2	$\overline{\text{RESET}}$
3	D2	37	A6	A3	D1	F9	A18
4	D1	38	A7	A4	D2	F10	A19
5	D0	39	A8	A5	D4	G1	$\overline{\text{VMA}}$
6	AS	40	A9	A6	D5	G2	$\overline{\text{VPA}}$
7	$\overline{\text{UDS}}$	41	A10	A7	D7	G9	A15
8	$\overline{\text{LDS}}$	42	A11	A8	D8	G10	A17
9	R/$\overline{\text{W}}$	43	A12	A9	D10	H1	E
10	$\overline{\text{DTACK}}$	44	A13	A10	D12	H2	$\overline{\text{IPL2}}$
11	$\overline{\text{BG}}$	45	A14	B1	$\overline{\text{DTACK}}$	H3	$\overline{\text{IPL1}}$
12	$\overline{\text{BGACK}}$	46	A15	B2	$\overline{\text{LDS}}$	H8	A13
13	$\overline{\text{BR}}$	47	A16	B3	$\overline{\text{UDS}}$	H9	A12
14	V_{CC}	48	A17	B4	D0	H10	A16
15	CLK	49	A18	B5	D3	J1	$\overline{\text{BERR}}$
16	GND	50	A19	B6	D6	J2	$\overline{\text{IPL0}}$
17	GND	51	A20	B7	D9	J3	FC1
18	NC	52	V_{CC}	B8	D11	J4	NC
19	$\overline{\text{HALT}}$	53	A21	B9	D13	J5	A2
20	$\overline{\text{RESET}}$	54	A22	B10	D15	J6	A5
21	$\overline{\text{VMA}}$	55	A23	C1	$\overline{\text{BGACK}}$	J7	A8
22	E	56	GND	C2	$\overline{\text{BG}}$	J8	A10
23	$\overline{\text{VPA}}$	57	GND	C3	R/$\overline{\text{W}}$	J9	A11
24	$\overline{\text{BERR}}$	58	D15	C8	D13	J10	A14
25	$\overline{\text{IPL2}}$	59	D14	C9	A23	K1	NC
26	$\overline{\text{IPL1}}$	60	D13	C10	A22	K2	FC2
27	$\overline{\text{IPL0}}$	61	D12	D1	$\overline{\text{BR}}$	K3	FC0
28	FC2	62	D11	D2	V_{CC}	K4	A1
29	FC1	63	D10	D9	V_{SS}	K5	A3
30	FC0	64	D9	D10	A21	K6	A4
31	NC	65	D8	E1	CLK	K7	A6
32	A1	66	D7	E2	V_{SS}	K8	A7
33	A2	67	D6	E9	V_{CC}	K9	A9
34	A3	68	D5	E10	A20	K10	NC

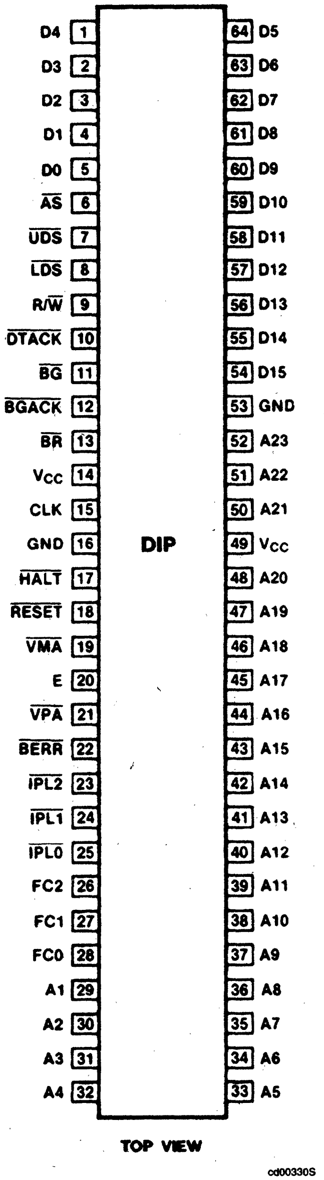
D4 1
D3 2
D2 3
D1 4
D0 5
AS 6
UDS 7
LDS 8
R/W 9
DTACK 10
BG 11
BGACK 12
BR 13
Vcc 14
CLK 15
GND 16
HALT 17
RESET 18
VMA 19
E 20
VPA 21
BERR 22
IPL2 23
IPL1 24
IPL0 25
FC2 26
FC1 27
FC0 28
A1 29
A2 30
A3 31
A4 32
64 D5
63 D6
62 D7
61 D8
60 D9
59 D10
58 D11
57 D12
56 D13
55 D14
54 D15
53 GND
52 A23
51 A22
50 A21
49 Vcc
48 A20
47 A19
46 A18
45 A17
44 A16
43 A15
42 A14
41 A13
40 A12
39 A11
38 A10
37 A9
36 A8
35 A7
34 A6
33 A5
DIP

TOP VIEW

cd00330S

Signetics

SCB68430
Direct Memory Access Interface (DMAI)

Preliminary Specification

Microprocessor Products

DESCRIPTION

The SCB68430 Direct Memory Access Interface (DMAI) is a single channel interface circuit which is intended to complement the performance and architectural capabilities of the SCN68000 microprocessor. The DMAI functions by transferring a series of operands (data) between memory and a device: operand sizes may be byte, word, or long word. A block is a sequence of operands: the number of operands in the block is determined by a transfer count stored within the DMAI. The SCB68430 can be programmed to utilize single cycle (cycle stealing) or burst data transfers.

The DMAI provides two interfaces. The microprocessor interface is fully compatible with the SCN68000 microprocessor. The device interface includes lines for requesting, acknowledging, controlling, and timing the data transfers. The DMAI is a single-channel subset of the other 68000 family DMA controllers (68440 and 68450). It is software compatible with these devices and provides similar interfacing signals to both the system bus and the device.

The SCB68430 is constructed using Signetics ISL bipolar technology.

FEATURES

- **Bus compatible with SCN68000 microprocessor**
- **Software compatible with other 68K family DMA controllers**
- **Single address transfers**
- **Cycle steal and burst mode operation**
- **Bus arbitration daisy chain**
- **Automatic rerun on bus error**
- **Supports 32-bit transfers for VME bus**
- **Supports SCN68000 vectored interrupts**
- **24-bit address counter**
- **16-bit transfer counter**
- **Maximum transfer rate of 5 Mbytes per second**
- **Signetics ISL bipolar technology**

ORDERING CODE

PACKAGES	$V_{CC} = 5V \pm 5\%$, $T_A = 0°C$ to $70°C$	
	10MHz	12.5MHz
Ceramic DIP	SCB68430CAI48	SCB68430CCI48
Plastic DIP	SCB68430CAN48	SCB68430CCN48
Plastic LCC	SCB68430CAA52	SCB68430CCA52

PIN CONFIGURATION

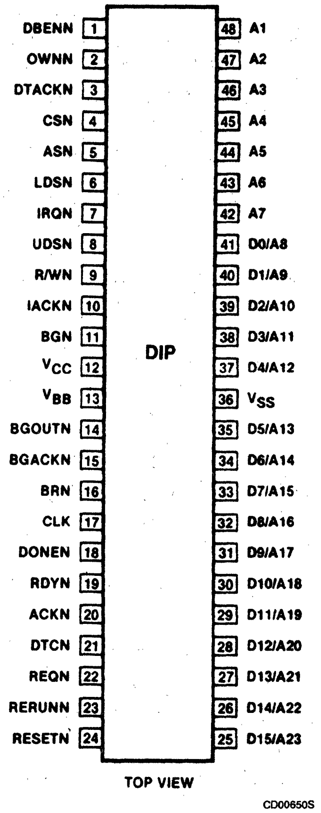
DBENN 1
OWNN 2
DTACKN 3
CSN 4
ASN 5
LDSN 6
IRQN 7
UDSN 8
R/WN 9
IACKN 10
BGN 11
VCC 12
VBB 13
BGOUTN 14
BGACKN 15
BRN 16
CLK 17
DONEN 18
RDYN 19
ACKN 20
DTCN 21
REQN 22
RERUNN 23
RESETN 24
DIP
48 A1
47 A2
46 A3
45 A4
44 A5
43 A6
42 A7
41 D0/A8
40 D1/A9
39 D2/A10
38 D3/A11
37 D4/A12
36 VSS
35 D5/A13
34 D6/A14
33 D7/A15
32 D8/A16
31 D9/A17
30 D10/A18
29 D11/A19
28 D12/A20
27 D13/A21
26 D14/A22
25 D15/A23
TOP VIEW
CD00650S

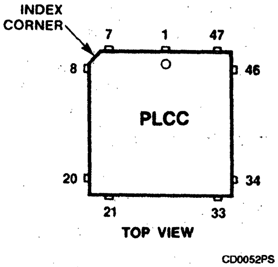
INDEX CORNER
7
1
47
8
46
PLCC
20
34
21
33
TOP VIEW
CD0052PS

Pin	Function	Pin	Function	Pin	Function
1	NC	19	CLK	36	D7/A15
2	DBENN	20	DONEN	37	D6/A14
3	OWNN	21	RDYN	38	D5/A13
4	DTACKN	22	ACKN	39	V_{SS}
5	CSN	23	DTCN	40	NC
6	ASN	24	REQN	41	D4/A12
7	LDSN	25	RERUNN	42	D3/A11
8	IRQN	26	RESETN	43	D2/A10
9	UDSN	27	NC	44	D1/A9
10	R/WN	28	D15/A23	45	D0/A8
11	IACKN	29	D14/A22	46	A7
12	BGN	30	D13/A21	47	A6
13	V_{CC}	31	D12/A20	48	A5
14	NC	32	D11/A19	49	A4
15	V_{BB}	33	D10/A18	50	A3
16	BGOUTN	34	D9/A17	51	A2
17	BGACKN	35	D8/A16	52	A1
18	BRN				

February 20, 1985

Direct Memory Access Interface (DMAI) SCB68430

BLOCK DIAGRAM

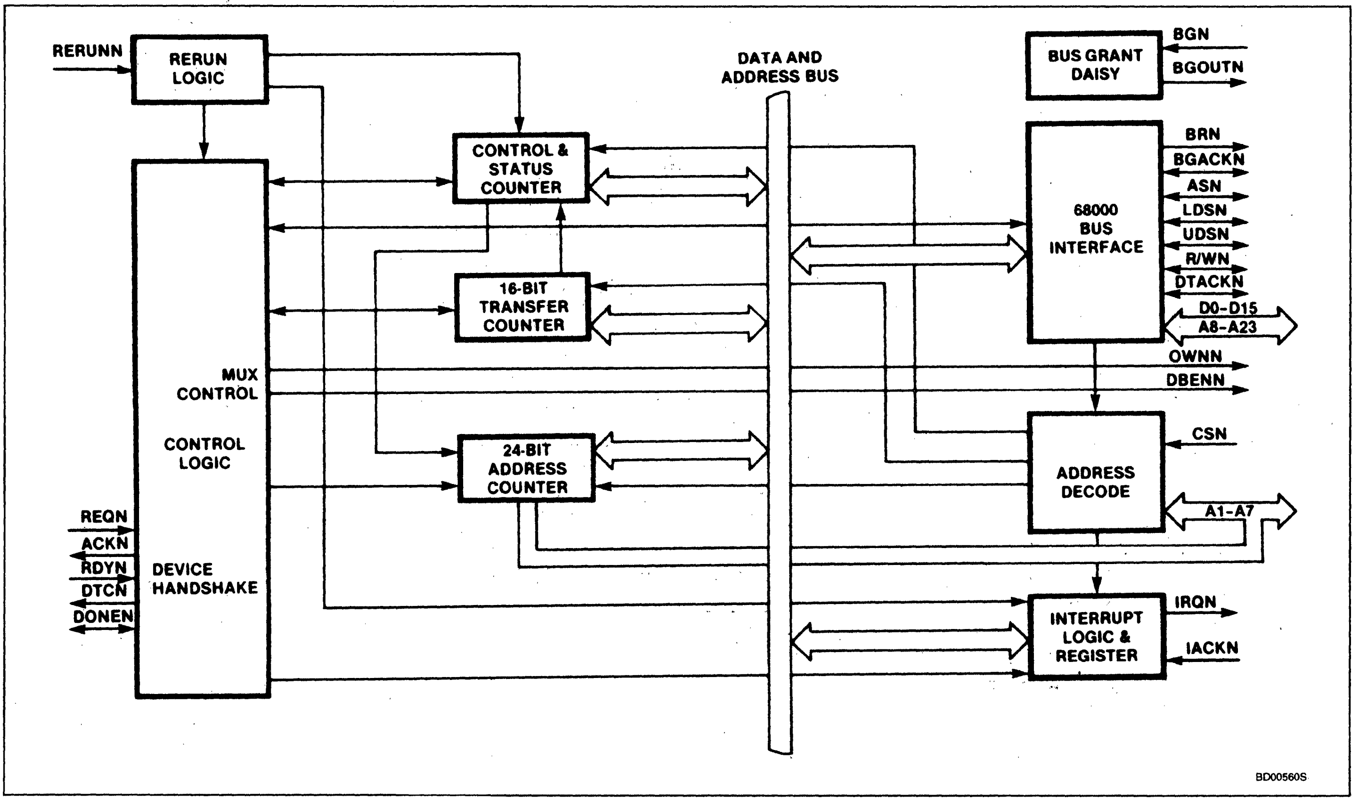
RERUNN
RERUN LOGIC
CONTROL & STATUS COUNTER
DATA AND ADDRESS BUS
BUS GRANT DAISY
BGN
BGOUTN
BRN
BGACKN
ASN
LDSN
UDSN
R/WN
DTACKN
D0-D15
A8-A23
68000 BUS INTERFACE
16-BIT TRANSFER COUNTER
MUX CONTROL
OWNN
DBENN
CONTROL LOGIC
24-BIT ADDRESS COUNTER
CSN
ADDRESS DECODE
A1-A7
REQN
ACKN
RDYN
DTCN
DONEN
DEVICE HANDSHAKE
INTERRUPT LOGIC & REGISTER
IRQN
IACKN
BD00560S

Signetics

SCN68454

Intelligent Multiple Disk Controller (IMDC)

Preliminary Specification

Microprocessor Products

DESCRIPTION

The SCN68454 Intelligent Multiple Disk Controller (IMDC) provides the traditional and advanced features required to control Winchester type rigid disks and floppy disks. It can control up to four rigid or floppy disk drives, in any combination. It can be used to control, with a minimum of external hardware, any drive that has an SA1000 interface standard or an ST506 Seagate interface standard.

The IMDC supports soft or hard sectored disk track format and standard IBM track formats for floppy disks (both single and double density).

The controller is programmable via an external host processor by the use of high level commands. Data transfer on the host data bus can be 8 or 16-bit in parallel. The IMDC is capable of handling a serial data rate of up to 10Mbits per second. The SCN68454 is constructed using Signetics MOS-VLSI technology.

FEATURES

- **Bus compatible with SCN68000 microprocessor**
- **Automatic rerun on bus error**
- **Supports SCN68000 vectored interrupts**
- **31-bit address counter**
- **16/8-bit data transfers**
- **Supports up to 4 rigid disks and floppy disks in any combination**
- **Supports SA1000 and ST506 Winchester interfaces**
- **Data rates up to 10Mbits per second for MFM**
- **Data rates up to 2Mbits per second for FM**
- **Handles FM and MFM data encoding/decoding**
- **On chip DMA controller and FIFO buffer (128 bytes)**
- **Multiple sector read/write with implied seek**
- **Automatic bad sector handling**
- **32 and 40-bit ECC programmable polynomials**
- **Supports computer generated ECC polynomials**

PIN CONFIGURATION

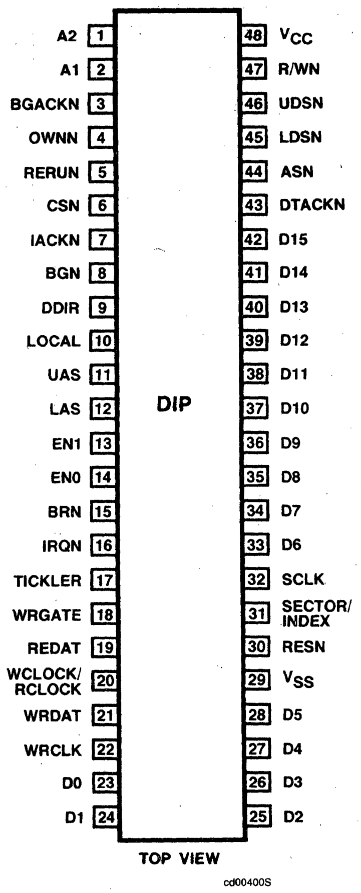
A2 1
A1 2
BGACKN 3
OWNN 4
RERUN 5
CSN 6
IACKN 7
BGN 8
DDIR 9
LOCAL 10
UAS 11
LAS 12
EN1 13
EN0 14
BRN 15
IRQN 16
TICKLER 17
WRGATE 18
REDAT 19
WCLOCK/ RCLOCK 20
WRDAT 21
WRCLK 22
D0 23
D1 24
48 VCC
47 R/WN
46 UDSN
45 LDSN
44 ASN
43 DTACKN
42 D15
41 D14
40 D13
39 D12
38 D11
37 D10
36 D9
35 D8
34 D7
33 D6
32 SCLK
31 SECTOR/ INDEX
30 RESN
29 VSS
28 D5
27 D4
26 D3
25 D2
DIP
TOP VIEW
cd00400S

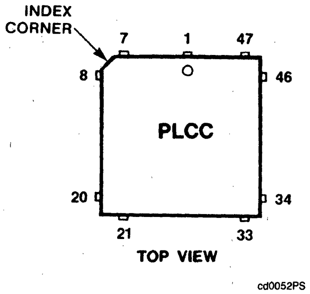
INDEX CORNER
7
1
47
8
46
PLCC
20
34
21
33
TOP VIEW
cd0052PS

Pin	Function	Pin	Function
1	NC	27	NC
2	A2	28	D2
3	A1	29	D3
4	BGACKN	30	D4
5	OWNN	31	D5
6	RERUNN	32	V_{SS}
7	CSN	33	RESN
8	IACKN	34	SECTOR/INDEX
9	BGN	35	SCLK
10	DDIR	36	D6
11	LOCAL	37	D7
12	UAS	38	D8
13	LAS	39	D9
14	NC	40	NC
15	EN1	41	D10
16	EN0	42	D11
17	BRN	43	D12
18	IRQN	44	D13
19	TICKLER	45	D14
20	WRGATE	46	D15
21	REDAT	47	DTACKN
22	WCLOCK/RCLOCK	48	ASN
23	WRDAT	49	LDSN
24	WRCLK	50	UDSN
25	D0	51	R/WN
26	D1	52	V_{CC}

July 1985

Intelligent Multiple Disk Controller (IMDC) SCN68454

ORDERING CODE

PACKAGES	V_{CC} = 5V ±5%, T_A = 0 to 70°C
Ceramic DIP	SCN68454C6I48
Plastic DIP	SCN68454C6N48
Plastic LCC	SCN68454C6A52

BLOCK DIAGRAM

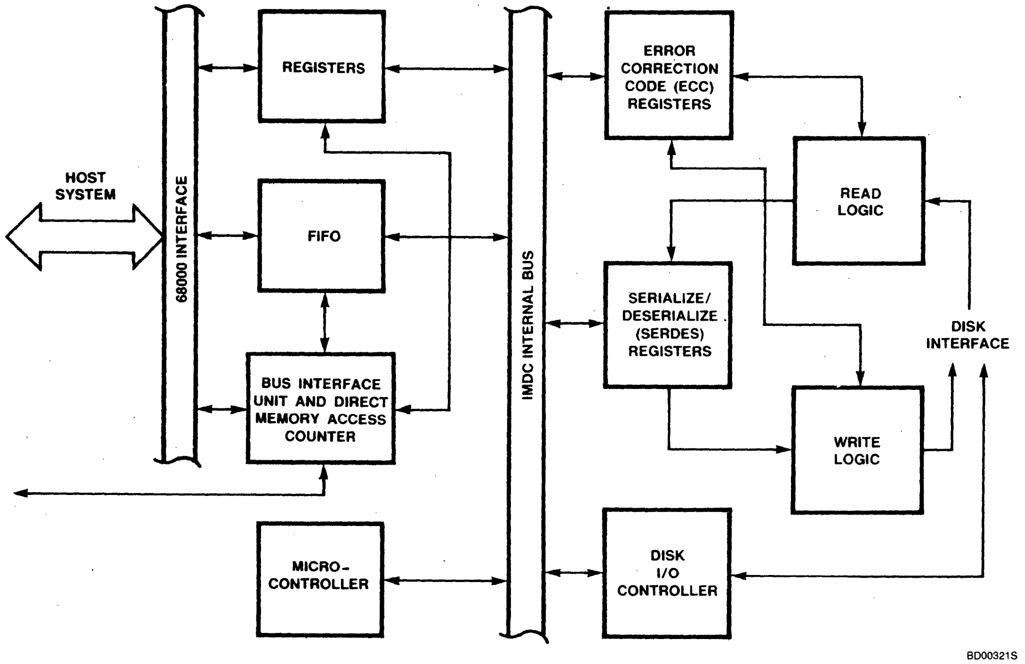
HOST SYSTEM
68000 INTERFACE
REGISTERS
FIFO
BUS INTERFACE UNIT AND DIRECT MEMORY ACCESS COUNTER
MICRO-CONTROLLER
IMDC INTERNAL BUS
ERROR CORRECTION CODE (ECC) REGISTERS
READ LOGIC
SERIALIZE/ DESERIALIZE (SERDES) REGISTERS
WRITE LOGIC
DISK I/O CONTROLLER
DISK INTERFACE
BD00321S

SCB68459
Disk Phase Locked Loop (DPLL)

Preliminary Specification

Microprocessor Products

DESCRIPTION

The SCB68459 Disk Phase Locked Loop (DPLL) is a bipolar device that complements the SCN68454 Intelligent Multiple Disk Controller (IMDC). Together, with an external voltage controlled oscillator (VCO), the DPLL and IMDC provide all the functions required to control up to four disks with SA800, ST500, or SA1000 type interfaces.

The DPLL uses an external VCO for the variable clock rate which tracks the read data from the disk unit. This VCO can be any device that can interface to the DPLL. The IMDC can control up to four disks; if these are all the same, only one DPLL is needed. If different disk types are driven by the same IMDC, then a DPLL is required for each disk drive type.

The SCB68459 DPLL operates by producing an oscillator frequency to match the frequency of an input signal. In this locked condition, any slight change in the input frequency (called jitter) will appear as a change in phase between the input frequency and the VCO frequency. This phase shift then acts as an error signal to change the frequency of the local DPLL VCO to match the input frequency.

The SCB68459 is constructed using Signetics extended performance logic (EPL) bipolar technology.

FEATURES

- **Supports composite data rate of 100KHz to 10MHz**
- **On chip multiplexer for read and write clock**
- **Supports MFM and FM data formats**
- **Generates synchronous clock for read data**
- **Built in pre-compensation circuit**
- **Phase detector and frequency detection for improved operation**
- **External loop gain control**
- **Minimal amount of external components required for operation**
- **Single +5 volt power supply**
- **Crystal controlled write clock**

PIN CONFIGURATION

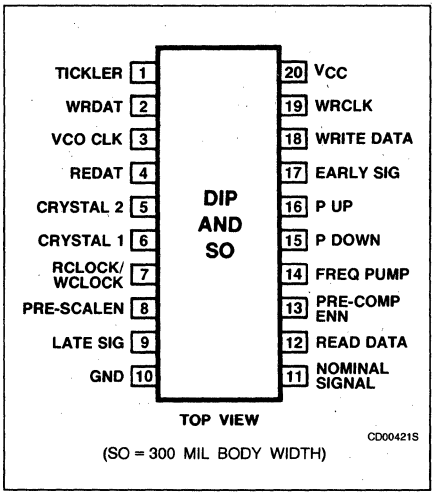
TICKLER 1
WRDAT 2
VCO CLK 3
REDAT 4
CRYSTAL 2 5
CRYSTAL 1 6
RCLOCK/WCLOCK 7
PRE-SCALEN 8
LATE SIG 9
GND 10
20 Vcc
19 WRCLK
18 WRITE DATA
17 EARLY SIG
16 P UP
15 P DOWN
14 FREQ PUMP
13 PRE-COMP ENN
12 READ DATA
11 NOMINAL SIGNAL
DIP AND SO
TOP VIEW
CD00421S
(SO = 300 MIL BODY WIDTH)

July 1985

Disk Phase Locked Loop (DPLL) SCB68459

ORDERING CODE

PACKAGES	V_{CC} = 5V ±5%, T_A = 0 to 70°C
Ceramic DIP	SCB68459CAI20
Plastic DIP	SCB68459CAN20
Small Outline	SCB68459CAD20

BLOCK DIAGRAM

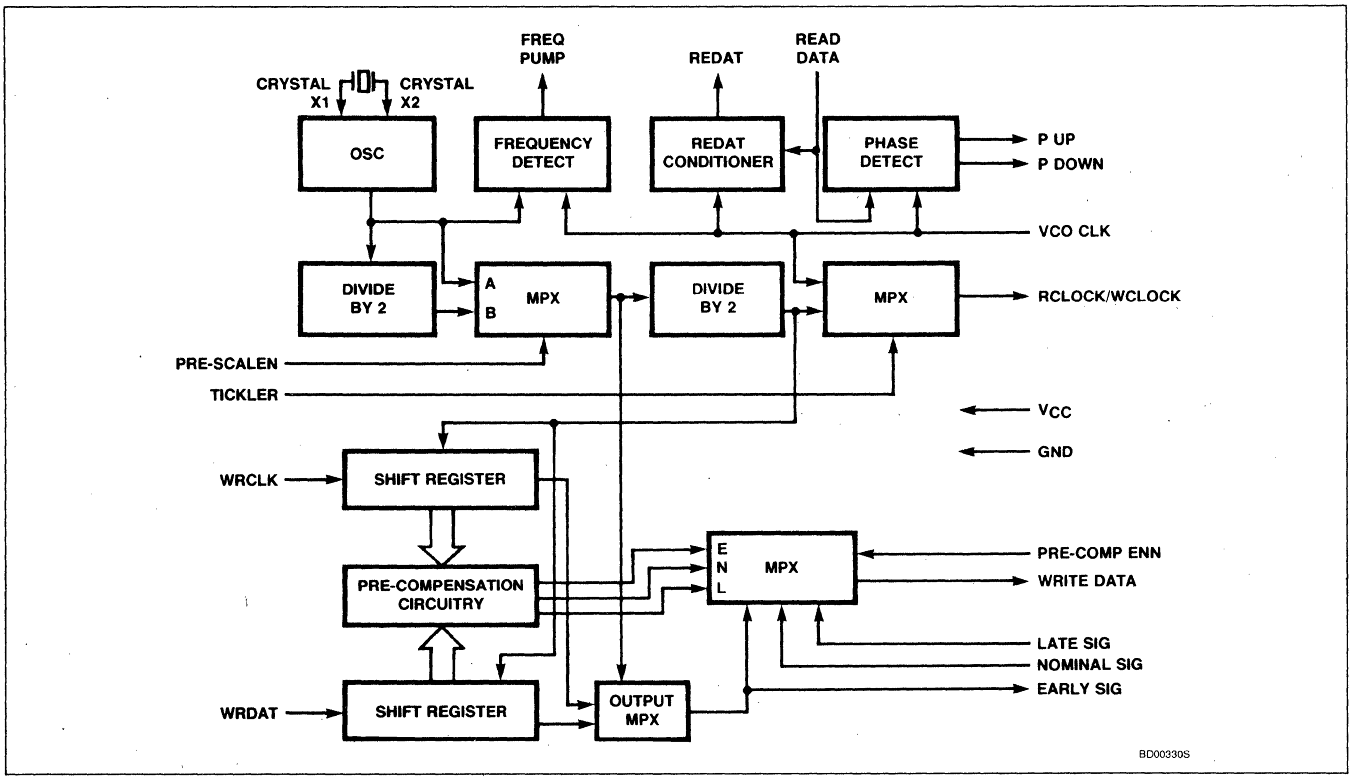
FREQ PUMP
REDAT
READ DATA
CRYSTAL X1
CRYSTAL X2
OSC
FREQUENCY DETECT
REDAT CONDITIONER
PHASE DETECT
P UP
P DOWN
VCO CLK
DIVIDE BY 2
A
B
MPX
DIVIDE BY 2
MPX
RCLOCK/WCLOCK
PRE-SCALEN
TICKLER
VCC
GND
WRCLK
SHIFT REGISTER
PRE-COMPENSATION CIRCUITRY
E
N
L
MPX
PRE-COMP ENN
WRITE DATA
LATE SIG
NOMINAL SIG
EARLY SIG
WRDAT
SHIFT REGISTER
OUTPUT MPX
BD00330S

SCN68562

Dual Universal Serial Communications Controller (DUSCC)

Microprocessor Products

Preliminary Specification

DESCRIPTION

The Signetics SCN68562 Dual Universal Serial Communications Controller (DUSCC) is a single chip MOS-LSI communications device that provides two independent, multi-protocol, full duplex receiver/transmitter channels in a single package. It supports bit oriented and character oriented (byte count and byte control) synchronous data link controls as well as asynchronous protocols. The SCN68562 interfaces to the 68000 MPU via asynchronous bus control signals and is capable of program polled, interrupt driven, block move or DMA data transfers.

The operating mode and data format of each channel can be programmed independently. Each channel consists of a receiver, a transmitter, a 16-bit multifunction counter/timer, a digital phase locked loop (DPLL), a parity/CRC generator and checker, and associated control circuits. The two channels share a common bit rate generator (BRG), operating directly from a crystal or an external clock, which provides sixteen common bit rates simultaneously. The operating rate for the receiver and transmitter of each channel can be independently selected from the BRG, the DPLL, the counter/timer, or from an external 1x or 16x clock, making the DUSCC well suited for dual speed channel applications. Data rates up to 4Mbits are supported.

The transmitter and receiver each contain a four-deep FIFO with appended transmitter command and receiver status bits and a shift register. This permits reading and writing of up to four characters at a time, minimizing the potential of receiver overrun or transmitter underrun, and reducing interrupt or DMA overhead. In addition, a flow control capability is provided to disable a remote transmitter when the FIFO of the local receiving device is full.

PIN CONFIGURATION

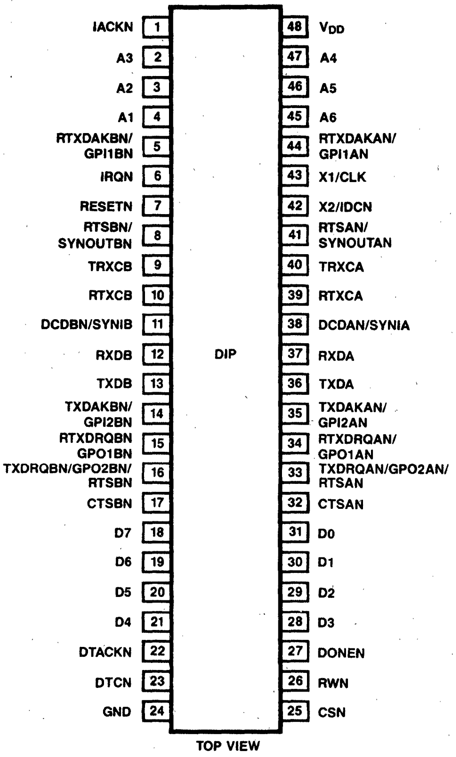
IACKN 1
A3 2
A2 3
A1 4
RTXDAKBN/GPI1BN 5
IRQN 6
RESETN 7
RTSBN/SYNOUTBN 8
TRXCB 9
RTXCB 10
DCDBN/SYNIB 11
RXDB 12
TXDB 13
TXDAKBN/GPI2BN 14
RTXDRQBN GPO1BN 15
TXDRQBN/GPO2BN/RTSBN 16
CTSBN 17
D7 18
D6 19
D5 20
D4 21
DTACKN 22
DTCN 23
GND 24
48 VDD
47 A4
46 A5
45 A6
44 RTXDAKAN/GPI1AN
43 X1/CLK
42 X2/IDCN
41 RTSAN/SYNOUTAN
40 TRXCA
39 RTXCA
38 DCDAN/SYNIA
37 RXDA
36 TXDA
35 TXDAKAN/GPI2AN
34 RTXDRQAN/GPO1AN
33 TXDRQAN/GPO2AN/RTSAN
32 CTSAN
31 D0
30 D1
29 D2
28 D3
27 DONEN
26 RWN
25 CSN
DIP
TOP VIEW

CD04010S

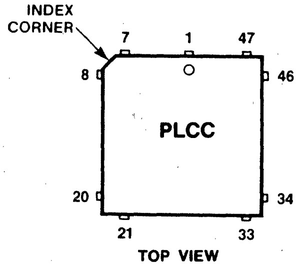
INDEX CORNER
7
1
47
8
46
PLCC
20
34
21
33
TOP VIEW

CD0052PS

Pin	Function	Pin	Function
1	NC	27	NC
2	IACKN	28	CSN
3	A3	29	R/WN
4	A2	30	DONEN
5	A1	31	D3
6	RTXDAKBN/GPI1BN	32	D2
		33	D1
7	IRQN	34	D0
8	RESETN	35	CTSAN/LCAN
9	RSTBN/SYNOUTBN	36	TXDRQAN/GPO2AN/RTSAN
10	TRXCB	37	RTXDRQAN/GPO1AN
11	RTXCB		
12	DCDBN/SYNIBN	38	TXDAKAN/GPI2AN
13	RXDB	39	TXDA
14	NC	40	NC
15	TXDB	41	RXDA
16	TXDAKBN/GPI2BN	42	DCDAN/SYNIAN
		43	RTXCA
17	RTXDRQBN/GPO1BN	44	TRXCA
		45	RSTAN/SYNOUTAN
18	TXDRQBN/GPO2BN/RTSBN	46	X2/IDCN
19	CTSBN/LCBN	47	X1/CLK
20	D7	48	RTXDAKAN/GPI1AN
21	D6		
22	D5	49	A6
23	D4	50	A5
24	DTACKN	51	A4
25	DTCN	52	V_{DD}
26	GND		

Two modem control inputs (DCD and CTS) and three modem control outputs (RTS and two general purpose) are provided. Because the modem control inputs and outputs are general purpose in nature, they can be optionally programmed for other functions.

September 1985

Dual Universal Serial Communications Controller (DUSCC) SCN68562

BLOCK DIAGRAM

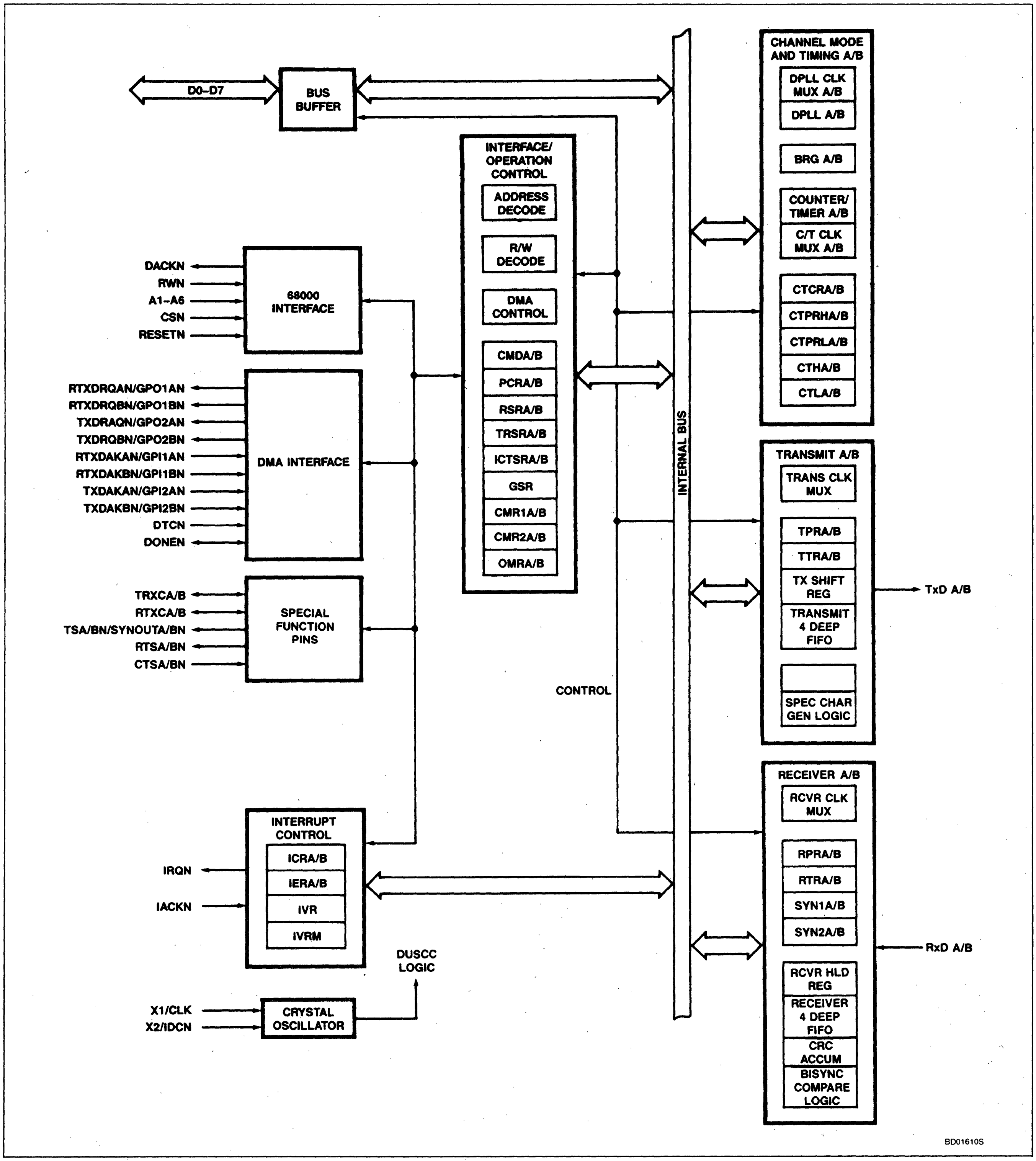
D0–D7
BUS BUFFER
INTERNAL BUS
CHANNEL MODE AND TIMING A/B
DPLL CLK MUX A/B
DPLL A/B
BRG A/B
COUNTER/ TIMER A/B
C/T CLK MUX A/B
CTCRA/B
CTPRHA/B
CTPRLA/B
CTHA/B
CTLA/B
INTERFACE/ OPERATION CONTROL
ADDRESS DECODE
R/W DECODE
DMA CONTROL
CMDA/B
PCRA/B
RSRA/B
TRSRA/B
ICTSRA/B
GSR
CMR1A/B
CMR2A/B
OMRA/B
DACKN
RWN
A1–A6
CSN
RESETN
68000 INTERFACE
RTXDRQAN/GPO1AN
RTXDRQBN/GPO1BN
TXDRAQN/GPO2AN
TXDRQBN/GPO2BN
RTXDAKAN/GPI1AN
RTXDAKBN/GPI1BN
TXDAKAN/GPI2AN
TXDAKBN/GPI2BN
DTCN
DONEN
DMA INTERFACE
TRXCA/B
RTXCA/B
TSA/BN/SYNOUTA/BN
RTSA/BN
CTSA/BN
SPECIAL FUNCTION PINS
CONTROL
TRANSMIT A/B
TRANS CLK MUX
TPRA/B
TTRA/B
TX SHIFT REG
TRANSMIT 4 DEEP FIFO
SPEC CHAR GEN LOGIC
TxD A/B
INTERRUPT CONTROL
ICRA/B
IERA/B
IVR
IVRM
IRQN
IACKN
DUSCC LOGIC
X1/CLK
X2/IDCN
CRYSTAL OSCILLATOR
RECEIVER A/B
RCVR CLK MUX
RPRA/B
RTRA/B
SYN1A/B
SYN2A/B
RCVR HLD REG
RECEIVER 4 DEEP FIFO
CRC ACCUM
BISYNC COMPARE LOGIC
RxD A/B
BD01610S

Signetics

SCN68681
Dual Asynchronous Receiver/ Transmitter (DUART)

Product Specification

Microprocessor Products

DESCRIPTION

The Signetics SCN68681 Dual Universal Asynchronous Receiver/Transmitter (DUART) is a single chip MOS-LSI communications device that provides two independent full-duplex asynchronous receiver/transmitter channels in a single package. It is compatible with other S68000 family devices, and can also interface easily with other microprocessors. The DUART can be used in polled or interrupt driven systems.

The operating mode and data format of each channel can be programmed independently. Additionally, each receiver and transmitter can select its operating speed as one of eighteen fixed baud rates, a 16x clock derived from a programmable counter/timer, or an external 1x or 16x clock. The baud rate generator and counter/timer can operate directly from a crystal or from external clock inputs. The ability to independently program the operating speed of the receiver and transmitter make the DUART particularly attractive for dual-speed channel applications such as clustered terminal systems.

FEATURES

- **S68000 bus compatible**
- **Dual full-duplex asynchronous receiver/transmitter**
- **Quadruple buffered receiver data registers**
- **Programmable data format**
  - **5 to 8 data bits plus parity**
  - **Odd, even, no parity or force parity**
  - **1, 1.5 or 2 stop bits programmable in 1/16 bit increments**
- **Programmable baud rate for each receiver and transmitter selectable from:**
  - **18 fixed rates: 50 to 38.4K baud**
  - **One user defined rate derived from programmable timer/ counter**
  - **External 1x or 16x clock**
- **Parity, framing, and overrun error detection**
- **False start bit detection**
- **Line break detection and generation**
- **Programmable channel mode**
  - **Normal (full duplex)**
  - **Automatic echo**
  - **Local loopback**
  - **Remote loopback**
- **Multi-function programmable 16-bit counter/timer**
- **Multi-function 6-bit input port**
  - **Can serve as clock or control inputs**
  - **Change of state detection on four inputs**
- **Multi-function 8-bit output port**
  - **Individual bit set/reset capability**
  - **Outputs can be programmed to be status/interrupt signals**
- **Versatile interrupt system**
  - **Single interrupt output with eight maskable interrupting conditions**
  - **Interrupt vector output on interrupt acknowledge**
  - **Output port can be configured to provide a total of up to six separate wire-OR'able interrupt outputs**
- **Maximum data transfer: 1X - 1MB/sec, 16X - 125KB/sec**
- **Automatic wake-up mode for multidrop applications**
- **Start-end break interrupt/status**
- **Detects break which originates in the middle of a character**
- **On-chip crystal oscillator**
- **TTL compatible**
- **Single +5V power supply**

PIN CONFIGURATION

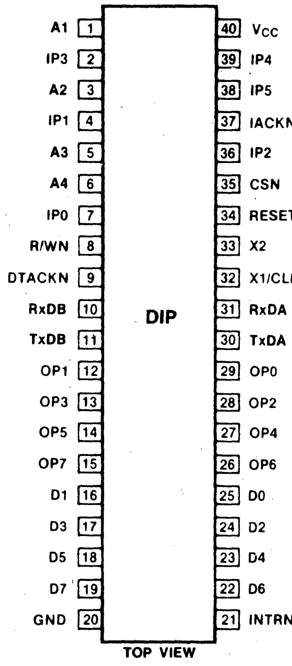

CD00231S

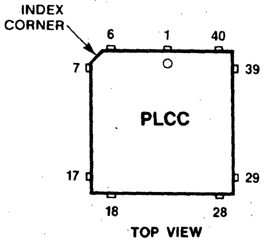

CD0044PS

Pin	Function	Pin	Function
1	NC	23	NC
2	A1	24	INTRN
3	IP3	25	D6
4	A2	26	D4
5	IP1	27	D2
6	A3	28	D0
7	A4	29	OP6
8	IP0	30	OP4
9	R/WN	31	OP2
10	DTACKN	32	OP0
11	RXDB	33	TXDA
12	NC	34	NC
13	TXDB	35	RXDA
14	OP1	36	X1/CLK
15	OP3	37	X2
16	OP5	38	RESET
17	OP7	39	CSN
18	D1	40	IP2
19	D3	41	IACKN
20	D5	42	IP5
21	D7	43	IP4
22	GND	44	V_{CC}

February 13, 1985

853-0081 77171

FOR COMPLETE DATA SHEET, Call 800-443-0100, Ext. 518

Dual Asynchronous Receiver/Transmitter (DUART) SCN68681

ORDERING CODE

PACKAGES	$V_{CC} = 5V \pm 5\%$, $T_A = 0°C$ to $70°C$
Ceramic DIP	SCN68681C1I40
Plastic DIP	SCN68681C1N40
Plastic LCC	SCN68681CIA44

BLOCK DIAGRAM

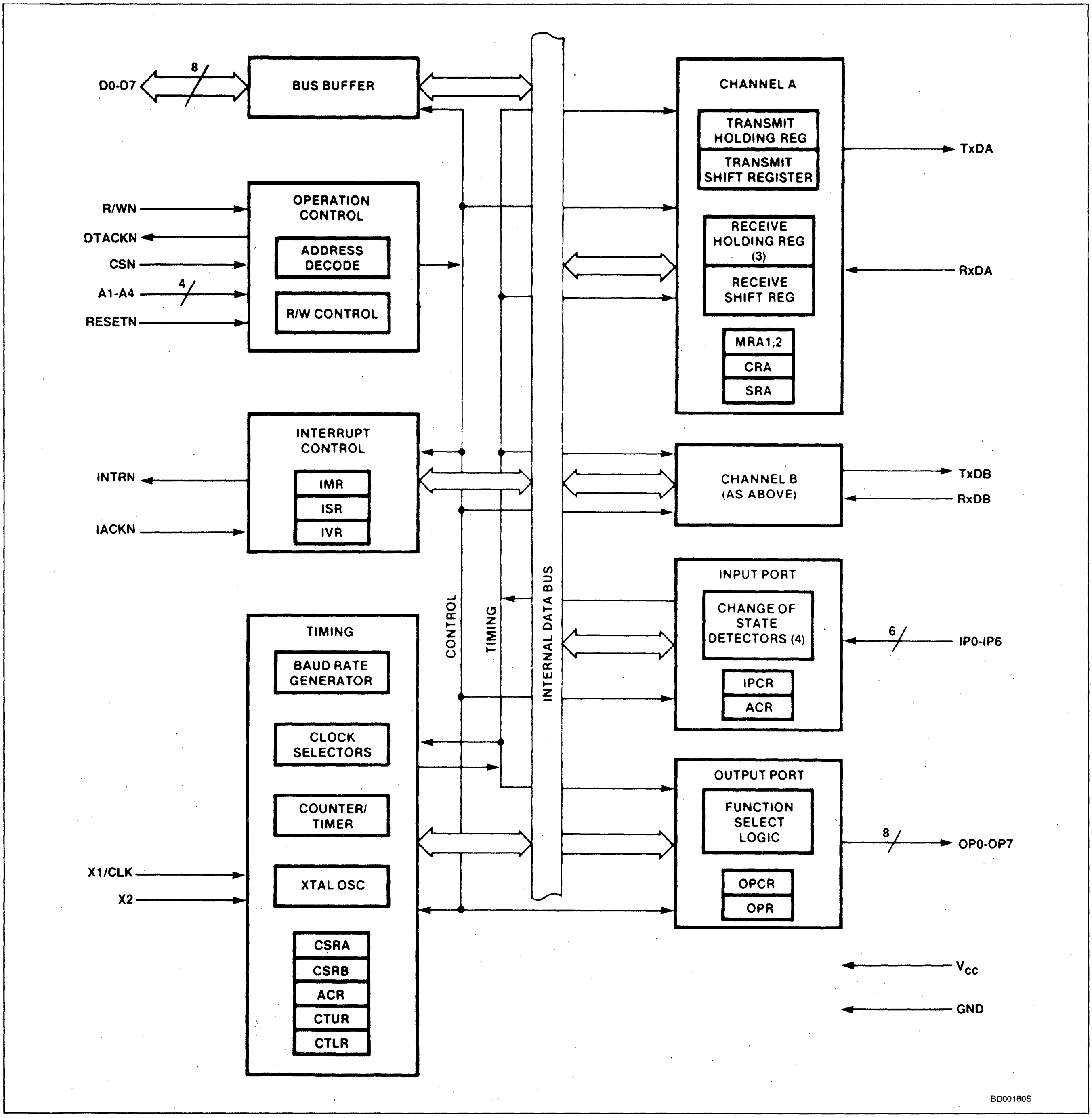
D0-D7
8
BUS BUFFER
R/WN
DTACKN
CSN
A1-A4
4
RESETN
OPERATION CONTROL
ADDRESS DECODE
R/W CONTROL
INTRN
IACKN
INTERRUPT CONTROL
IMR
ISR
IVR
X1/CLK
X2
TIMING
BAUD RATE GENERATOR
CLOCK SELECTORS
COUNTER/ TIMER
XTAL OSC
CSRA
CSRB
ACR
CTUR
CTLR
CONTROL
TIMING
INTERNAL DATA BUS
CHANNEL A
TRANSMIT HOLDING REG
TRANSMIT SHIFT REGISTER
RECEIVE HOLDING REG (3)
RECEIVE SHIFT REG
MRA1,2
CRA
SRA
TxDA
RxDA
CHANNEL B (AS ABOVE)
TxDB
RxDB
INPUT PORT
CHANGE OF STATE DETECTORS (4)
IPCR
ACR
6
IP0-IP6
OUTPUT PORT
FUNCTION SELECT LOGIC
OPCR
OPR
8
OP0-OP7
Vcc
GND
BD00180S

February 13, 1985

Signetics

SCC68905
Basic Memory Access Controller (BMAC)

Advance Information

Microprocessor Products

DESCRIPTION

The Signetics SCC68905 Basic Memory Access Controller (BMAC) is designed for the S68000 family (68000, 68010 and 68012) of microprocessors. It has a 24-bit logical address and a 24-bit physical address space. The BMAC mediates all accesses between the processor and system memory by controlling the memory hierarchy, translating virtual addresses into real addresses, supporting context switches and providing protection against unauthorized memory access. The operating system allocates the system memory and the BMAC implements these functions dynamically. The BMAC also provides support for a local memory. The SCC68905 is constructed using Signetics CMOS VLSI technology.

FEATURES

- **Mediates memory reference between processor and memory**
- **Functions as a demand-driven MMU and a cache controller**
- **No wait states on cache hits**
- **MMU action occurs in parallel with cache action**
- **Little mutual bus interference with up to four processors**
- **Ensures correct data in required local memory**
- **Variable length segments with paging, variable length contiguous segments, or paged only**
- **Allows partitioning the virtual address space into one to four regions**
- **Selective flushing by regions**
- **Provides four protection types at the page or segment level**
- **Maintains four history bits**
- **Configurable cache block size of 2, 4, 8, or 16 bytes wide**
- **Configurable cache depth of 512, 1024, or 2048 blocks**
- **Configurable page size of 1k, 2k, 4k, or 8k bytes**
- **Can use sequential accesses to fill cache if available on the system**

October 1985

PIN CONFIGURATION

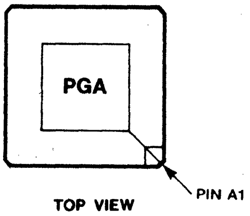

TOP VIEW

CD00110S

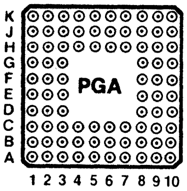

BOTTOM VIEW

CD00100S

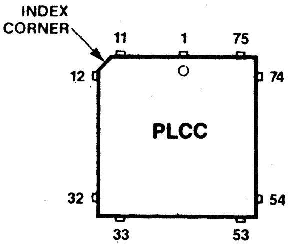

TOP VIEW

CD0084PS

PGA	Function	PGA	Function	PLCC	Function	PLCC	Function
A-1	A3	F-1	V_{CC}	1	CADD3	43	MASN
A-2	A5	F-2	D15	2	CADD4	44	V_{SS}
A-3	A7	F-3	D14	3	A9	45	DTACKINN
A-4	A8	F-8	ASN	4	A8	46	CCEN
A-5	CADD3	F-9	BERRINN	5	A7	47	LACLR
A-6	CADD2	F-10	V_{CC}	6	A6	48	DTACKOUTN
A-7	CADD0	G-1	D13	7	A5	49	PA10
A-8	A12	G-2	D11	8	A4	50	PA11
A-9	PA23	G-3	D9	9	A3	51	PA12
A-10	A15	G-8	PA19	10	A2	52	PA13
B-1	FC2	G-9	PA20	11	A1	53	PA14
B-2	A1	G-10	CLOCK	12	FC0	54	PA15
B-3	A2	H-1	D12	13	FC1	55	PA16
B-4	A6	H-2	D7	14	FC2	56	PA17
B-5	CADD4	H-3	D5	15	FC3	57	PA18
B-6	CADD1	H-4	D1	16	RESETN	58	PA19
B-7	A10	H-5	MISS	17	CSN	59	PA20
B-8	PA22	H-6	DTACKINN	18	R/WN	60	CLOCK
B-9	A13	H-7	PA11	19	NC	61	BERRINN
B-10	A17	H-8	PA15	20	UDSN	62	ASN
C-1	FC3	H-9	PA16	21	LDSN	63	V_{CC}
C-2	FC1	H-10	PA18	22	V_{CC}	64	A23
C-3	FC0	J-1	D10	23	D15	65	A22
C-4	A4	J-2	D6	24	D14	66	A21
C-5	A9	J-3	D4	25	D13	67	A20
C-6	V_{SS}	J-4	D0	26	D12	68	A19
C-7	A11	J-5	BERROUTN	27	D11	69	A18
C-8	PA21	J-6	V_{SS}	28	D10	70	A17
C-9	A14	J-7	DTACKOUTN	29	D9	71	A16
C-10	A19	J-8	PA13	30	D8	72	A15
D-1	R/WN	J-9	PA14	31	D7	73	A14
D-2	CSN	J-10	PA17	32	D6	74	A13
D-3	RESETN	K-1	D8	33	D5	75	PA21
D-8	A16	K-2	D3	34	D4	76	PA22
D-9	A18	K-3	D2	35	D3	77	PA23
D-10	A20	K-4	LOCAL	36	D2	78	A12
E-1	LDSN	K-5	CWEN	37	D1	79	A11
E-2	NC	K-6	MASN	38	D0	80	A10
E-3	UDSN	K-7	CCEN	39	LOCAL	81	CADD0
E-8	A21	K-8	LACLR	40	BERROUTN	82	CADD1
E-9	A22	K-9	PA10	41	MISS	83	V_{SS}
E-10	A23	K-10	PA12	42	CWEN	84	CADD2

Basic Memory Access Controller (BMAC) SCC68905

ORDERING CODE

PACKAGES	$V_{CC} = 5V \pm 5\%$, $T_A = 0°C$ to $70°C$
Ceramic PGA	SCC68905CCP84
Plastic LCC	SCC68905CCA84

BLOCK DIAGRAM

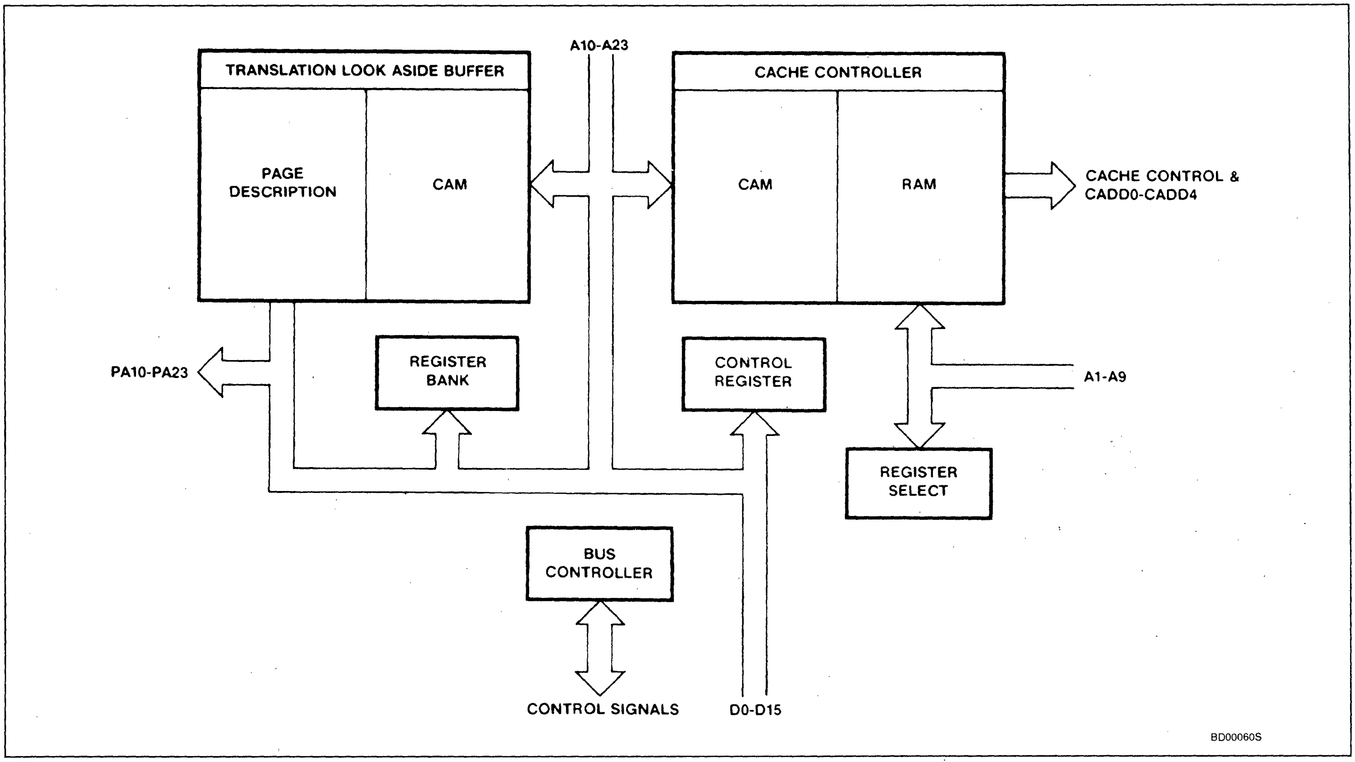
A10-A23
TRANSLATION LOOK ASIDE BUFFER
PAGE DESCRIPTION
CAM
CACHE CONTROLLER
CAM
RAM
CACHE CONTROL & CADD0-CADD4
PA10-PA23
REGISTER BANK
CONTROL REGISTER
A1-A9
REGISTER SELECT
BUS CONTROLLER
CONTROL SIGNALS
D0-D15
BD00060S

Signetics

SCB68154
Interrupt Generator

Preliminary Specification

Microprocessor Products

DESCRIPTION

The Signetics SCB68154/8X825 Interrupt Generator provides an interface between an interrupting device and a system bus such as the VMEbus or VERSAbus™. Figure 1 shows a typical configuration of the SCB68154/8X825. The SCB68154/8X825 has three primary functions:

1. Generates bus interrupt requests.
2. Resides in the interrupt acknowledge daisy-chain.
3. Allows a status/ID byte (interrupt vector) to be supplied to the system if needed.

The SCB68154/8X825 has seven interrupt request levels, $\overline{IRQ7}$ - $\overline{IRQ1}$, which are selected by using the interrupt request register. The local master writes to the interrupt request register to generate an interrupt request on any interrupt request level. The interrupt request register may be read to determine if an interrupt has been acknowledged. If a level with an interrupt request pending is acknowledged, the SCB68154/8X825 will allow a status/ID byte to be supplied to the system. Seven bits of the status/ID byte come from the interrupt vector register with the user externally supplying the LSB. If the SCB68154/8X825 does not have an interrupt on the level acknowledged, the SCB68154/8X825 will pass the interrupt acknowledge on via the interrupt acknowledge daisy-chain output. The user can enable all interrupt request levels and clear all interrupt request levels by setting specific bits in the interrupt vector register.

The SCB68154/8X825 was designed primarily for interface to the VMEbus. For more information regarding the protocol definitions, proper use, and application of this device, refer to the VMEbus Specification Manual.

FEATURES

- **Interrupts generator for VMEbus and VERSAbus systems**
- **Generates 7 bus interrupt requests**
- **Two internal registers for system control**
- **Interrupt enable and interrupt clear bits**
- **Allows status/ID byte to be supplied during interrupt acknowledge**
- **High speed bipolar technology**
- **Single +5V supply**

PIN CONFIGURATION

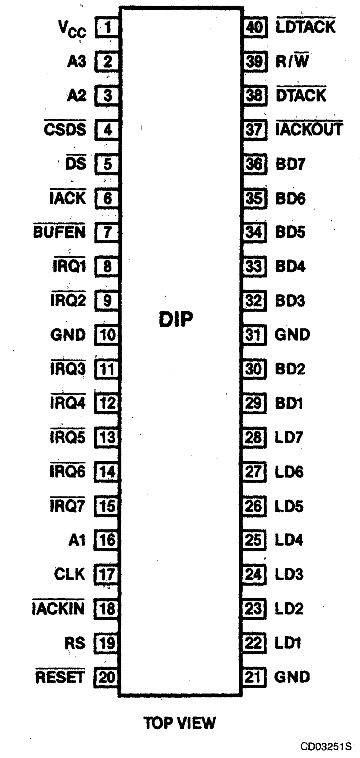
VCC 1
A3 2
A2 3
CSDS 4
DS 5
IACK 6
BUFEN 7
IRQ1 8
IRQ2 9
GND 10
IRQ3 11
IRQ4 12
IRQ5 13
IRQ6 14
IRQ7 15
A1 16
CLK 17
IACKIN 18
RS 19
RESET 20
40 LDTACK
39 R/W
38 DTACK
37 IACKOUT
36 BD7
35 BD6
34 BD5
33 BD4
32 BD3
31 GND
30 BD2
29 BD1
28 LD7
27 LD6
26 LD5
25 LD4
24 LD3
23 LD2
22 LD1
21 GND
DIP
TOP VIEW
CD03251S

VERSAbus is a registered trademark of Motorola, Inc.

September 1985

Interrupt Generator SCB68154

ORDERING CODE

PACKAGES	V_{CC} = 5V ±5%, T_A = 0°C to 70°C
Ceramic DIP	SCB68154C2I40
Plastic DIP	SCB68154C2N40

BLOCK DIAGRAM

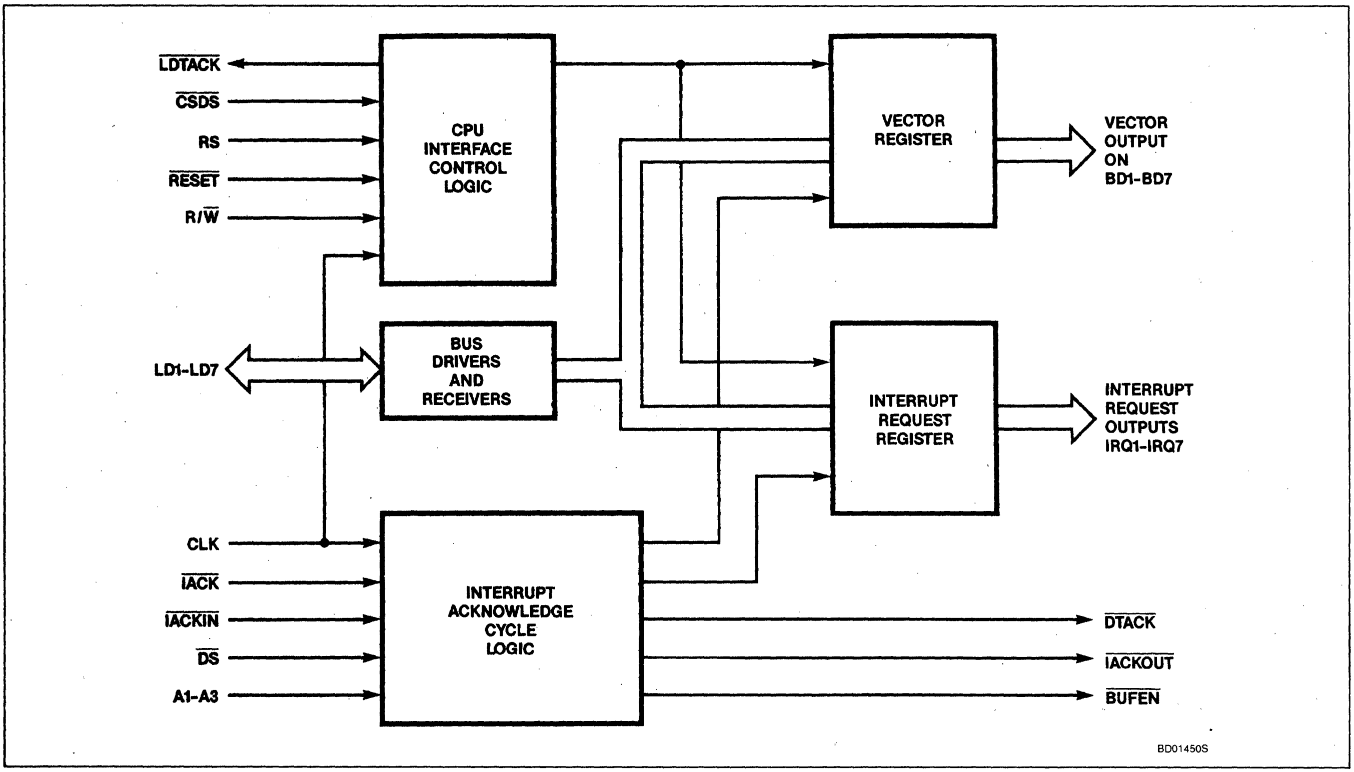
$\overline{LDTACK}$
$\overline{CSDS}$
RS
$\overline{RESET}$
R/$\overline{W}$
LD1-LD7
CLK
$\overline{IACK}$
$\overline{IACKIN}$
$\overline{DS}$
A1-A3
CPU INTERFACE CONTROL LOGIC
BUS DRIVERS AND RECEIVERS
INTERRUPT ACKNOWLEDGE CYCLE LOGIC
VECTOR REGISTER
INTERRUPT REQUEST REGISTER
VECTOR OUTPUT ON BD1-BD7
INTERRUPT REQUEST OUTPUTS IRQ1-IRQ7
$\overline{DTACK}$
$\overline{IACKOUT}$
$\overline{BUFEN}$
BD01450S

Signetics

SCB68155
Interrupt Handler

Preliminary Specification

Microprocessor Products

DESCRIPTION

The Signetics SCB68155/8X824 is an asynchronous interrupt handler for VMEbus and VERSAbus™ systems. Up to 14 interrupts are prioritized by the SCB68155/8X824 to one of seven levels and are output on the interrupt priority level lines ($\overline{\text{IPL0}}$ - $\overline{\text{IPL2}}$). The SCB68155/8X824 prioritizes the interrupts in the following manner: local bus requests over system bus requests with the non-maskable interrupt ($\overline{\text{NMI}}$) considered the highest priority local interrupt ($\overline{\text{NMI}}$ over $\overline{\text{IRQ7}}$, then $\overline{\text{LRQ6}}$ - $\overline{\text{LRQ1}}$ over $\overline{\text{IRQ6}}$ - $\overline{\text{IRQ1}}$).

The local interrupt requests can be programmed to be either active high or low, and either edge or level sensitive. The system bus interrupt requests are always active low and level sensitive. The non-maskable interrupt is always negative edge triggered.

During a local interrupt acknowledge sequence, two modes of response are available: vectored mode or device-supplies-the vector mode.

For system bus responses, the SCB68155/8X824 works with a bus requester (for example, the Signetics SCB68175/8X821 Bus Master or SCB68172 VMEbus Controller), to acquire a status/ID byte (interrupt vector) from the system.

The SCB68155/8X824 was designed primarily for interface to the VMEbus. For more information regarding the protocol definitions, proper use, and application of this device, refer to the VMEbus Specification Manual.

FEATURES

- **Asynchronous interrupt handler for VMEbus and VERSAbus systems**
- **Receives and prioritizes non-maskable, six local and seven system bus interrupts**
- **Interrupts may be polled in lieu of real time operation**
- **Programmable local interrupt response**
- **Works with the SCB68175/8X821 to acquire status/ID byte (vector) during bus interrupt acknowledge**
- **Complete device status, including last interrupt acknowledged**
- **High speed bipolar technology**

PIN CONFIGURATION

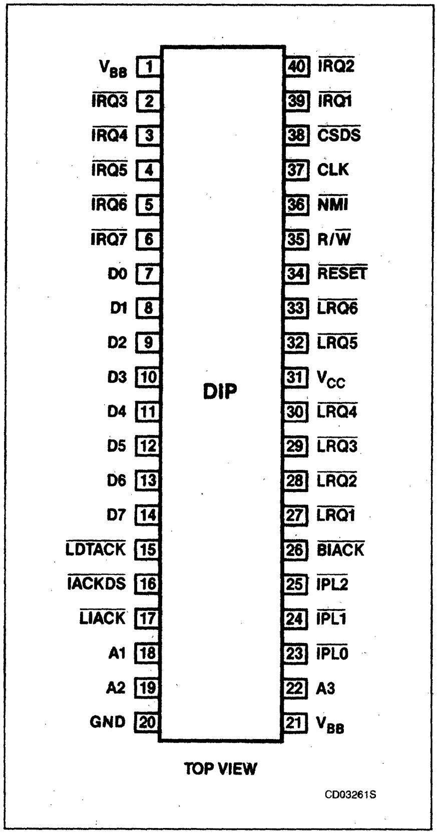
V_{BB} 1
$\overline{\text{IRQ3}}$ 2
$\overline{\text{IRQ4}}$ 3
$\overline{\text{IRQ5}}$ 4
$\overline{\text{IRQ6}}$ 5
$\overline{\text{IRQ7}}$ 6
D0 7
D1 8
D2 9
D3 10
D4 11
D5 12
D6 13
D7 14
$\overline{\text{LDTACK}}$ 15
$\overline{\text{IACKDS}}$ 16
$\overline{\text{LIACK}}$ 17
A1 18
A2 19
GND 20
40 $\overline{\text{IRQ2}}$
39 $\overline{\text{IRQ1}}$
38 $\overline{\text{CSDS}}$
37 CLK
36 $\overline{\text{NMI}}$
35 R/$\overline{\text{W}}$
34 $\overline{\text{RESET}}$
33 $\overline{\text{LRQ6}}$
32 $\overline{\text{LRQ5}}$
31 V_{CC}
30 $\overline{\text{LRQ4}}$
29 $\overline{\text{LRQ3}}$
28 $\overline{\text{LRQ2}}$
27 $\overline{\text{LRQ1}}$
26 $\overline{\text{BIACK}}$
25 $\overline{\text{IPL2}}$
24 $\overline{\text{IPL1}}$
23 $\overline{\text{IPL0}}$
22 A3
21 V_{BB}
DIP
TOP VIEW
CD03261S

VERSAbus is a registered trademark of Motorola, Inc.

September 1985

Interrupt Handler SCB68155

ORDERING CODE

PACKAGES	$V_{CC} = 5V \pm 5\%$, $T_A = 0°C$ to $70°C$
Ceramic DIP	SCB68155CAI40
Plastic DIP	SCB68155CAN40

BLOCK DIAGRAM

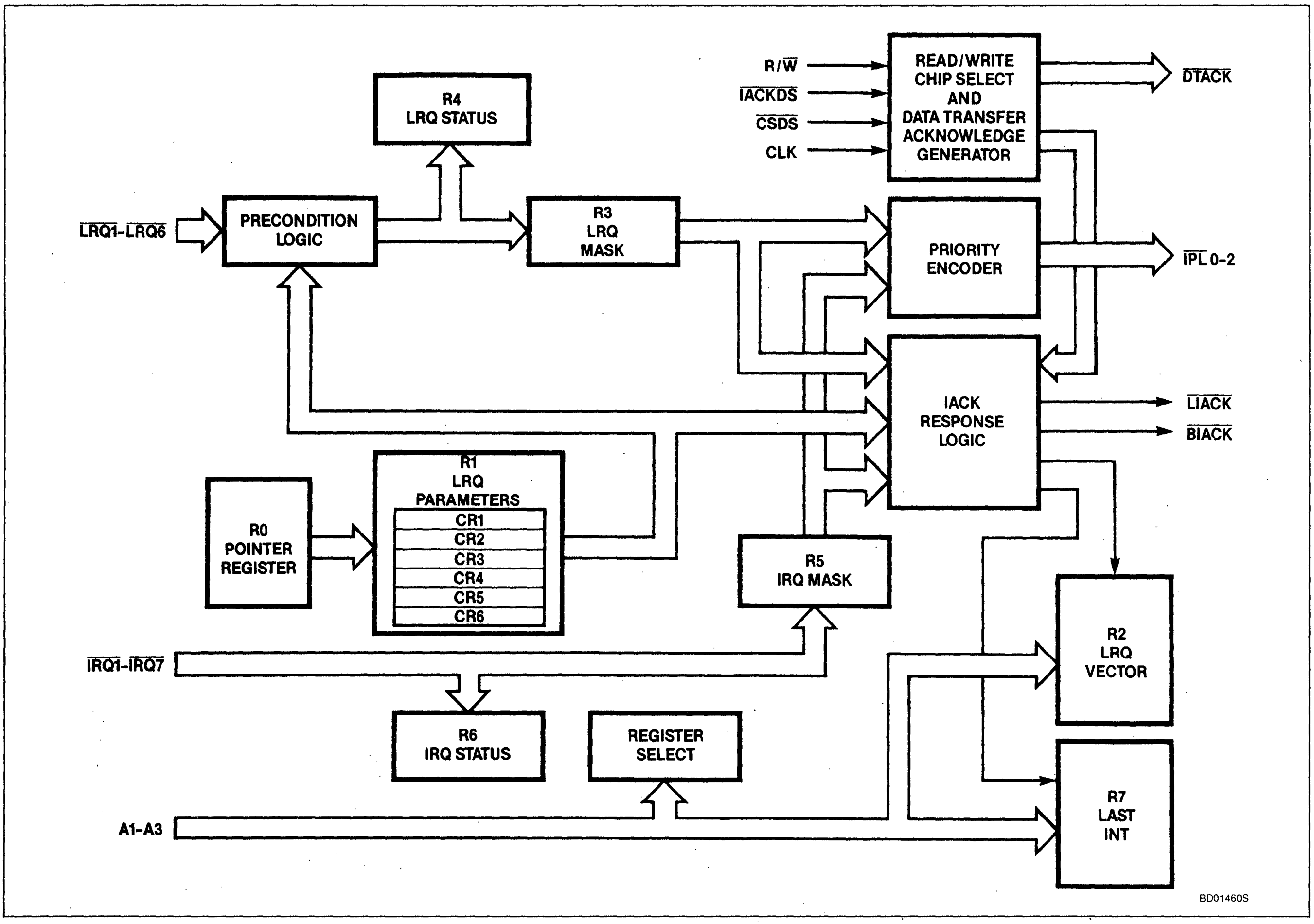
R/W̄
IACKDS
CSDS
CLK
READ/WRITE CHIP SELECT AND DATA TRANSFER ACKNOWLEDGE GENERATOR
DTACK
R4 LRQ STATUS
LRQ1-LRQ6
PRECONDITION LOGIC
R3 LRQ MASK
PRIORITY ENCODER
IPL 0-2
IACK RESPONSE LOGIC
LIACK
BIACK
R0 POINTER REGISTER
R1 LRQ PARAMETERS
CR1
CR2
CR3
CR4
CR5
CR6
R5 IRQ MASK
R2 LRQ VECTOR
IRQ1-IRQ7
R6 IRQ STATUS
REGISTER SELECT
R7 LAST INT
A1-A3
BD01460S

September 1985

Signetics

SCB68175
Bus Controller

Preliminary Specification

Microprocessor Products

DESCRIPTION

The Signetics SCB68175/8X821 Bus Controller is a high-speed bus requester and timing generator designed to interface a local master (typically, a microprocessor or DMA controller) to the VMEbus or VERSAbus™. The requester is fully asynchronous and controls all the sequencing required for acquisition and use of the bus, including both strobe and buffer timing. To permit fixed or variable length bus access, both release-when-done (RWD) and release-on-request (ROR) modes are supported by the SCB68175/8X821. In addition, an early bus-busy release increases system throughput by allowing bus arbitration to be performed concurrently with the final bus cycle of the local master. A bus error/retry circuit is also included in the SCB68175/8X821. This circuit allows the local master to rerun a cycle that was terminated by a bus error. Interface and control signals for a typical configuration are shown in Figure 1.

The SCB68175/8X821 Bus Controller is designed primarily for implementing a simple and efficient interface to the VMEbus. For more information regarding the protocol definitions, proper use, and application of this device, refer to the VMEbus Specification Manual.

FEATURES

- **Asynchronous bus controller for VMEbus and VERSAbus systems**
- **Provides transparent system interface to local master**
- **Supports both release-on-request (ROR) and release-when-done (RWD) operations**
- **Early bus-busy release for optimal bus usage**
- **Error/entry sequencing**
- **Dual port capability using 74LS764 DRAM controller**
- **High speed bipolar technology**
- **Single +5V supply**
- **24-pin slimline DIP package**

PIN CONFIGURATION

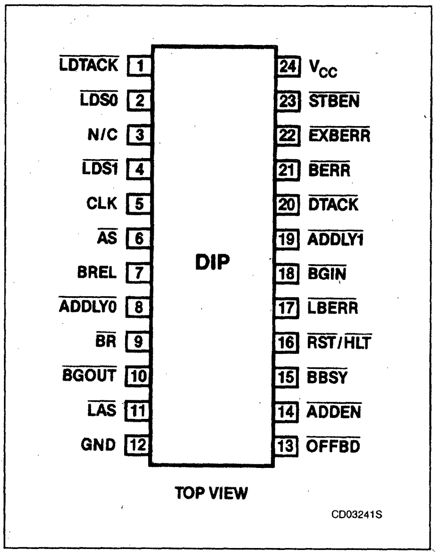

VERSAbus is a registered trademark of Motorola, Inc.

September 1985

Bus Controller SCB68175

BLOCK DIAGRAM

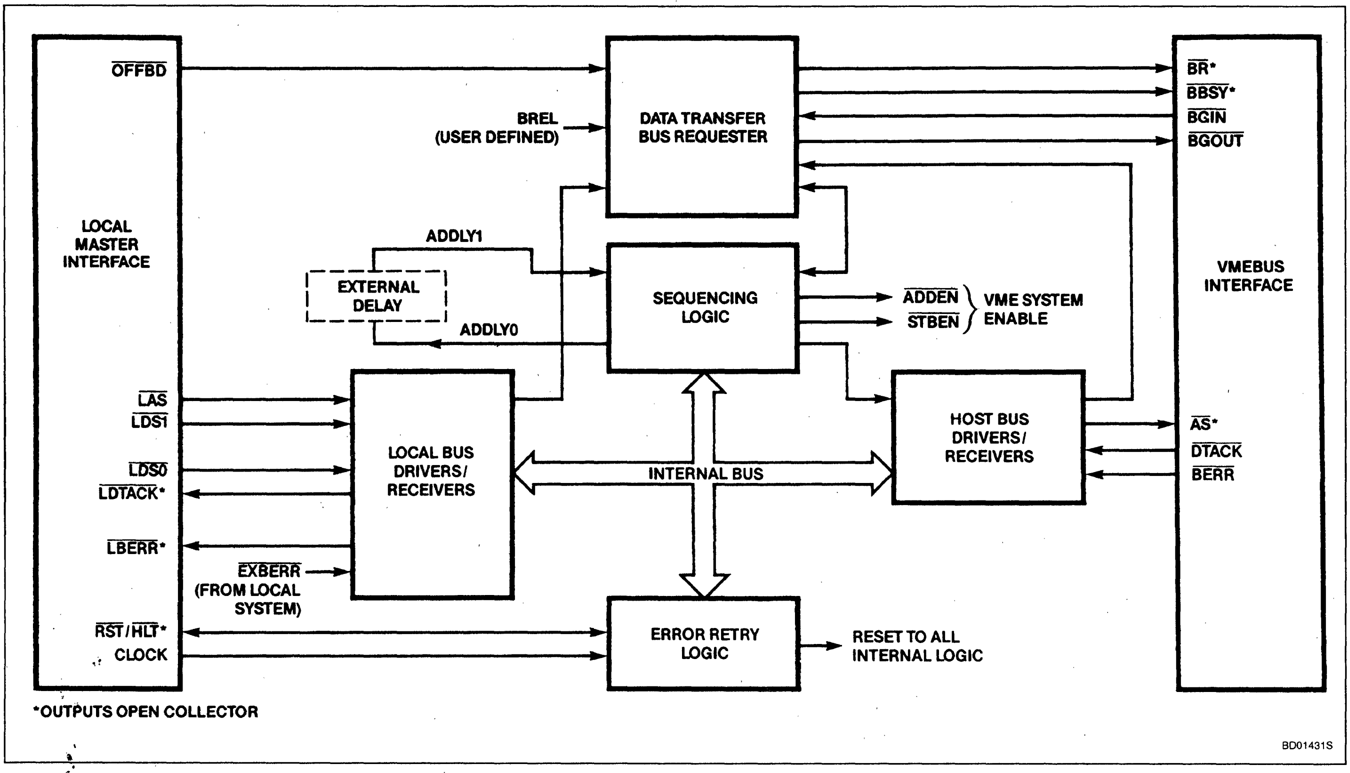
LOCAL MASTER INTERFACE
OFFBD
LAS
LDS1
LDS0
LDTACK*
LBERR*
RST/HLT*
CLOCK
BREL (USER DEFINED)
DATA TRANSFER BUS REQUESTER
ADDLY1
EXTERNAL DELAY
ADDLY0
SEQUENCING LOGIC
ADDEN
STBEN
VME SYSTEM ENABLE
LOCAL BUS DRIVERS/ RECEIVERS
INTERNAL BUS
HOST BUS DRIVERS/ RECEIVERS
EXBERR (FROM LOCAL SYSTEM)
ERROR RETRY LOGIC
RESET TO ALL INTERNAL LOGIC
VMEBUS INTERFACE
BR*
BBSY*
BGIN
BGOUT
AS*
DTACK
BERR
BD01431S

*OUTPUTS OPEN COLLECTOR

September 1985

Signetics

SCC68906
Basic Memory Access Controller (BMAC)

Advance Information

Microprocessor Products

DESCRIPTION

The Signetics SCC68906 Basic Memory Access Controller (BMAC) is designed for the S68000 family (68000, 68020 and 68012) of microprocessors. It has a 24-bit logical address and a 24-bit physical address space. The BMAC mediates all accesses between the processor and system memory by controlling the memory hierarchy, translating virtual addresses into real addresses, supporting context switches and providing protection against unauthorized memory access. The operating system allocates the system memory and the BMAC implements these functions dynamically. The BMAC also provides support for a local memory. The SCC68906 is constructed using Signetics CMOS VLSI technology.

FEATURES

- **Mediates memory reference between processor and memory**
- **Functions as a demand-driven MMU and a cache controller**
- **No wait states on cache hits**
- **MMU action occurs in parallel with cache action**
- **Little mutual bus interference with up to four processors**
- **Ensures correct data in required local memory**
- **Variable length segments with paging, variable length contiguous segments, or paged only**
- **Allows partitioning the virtual address space into one to four regions**
- **Selective flushing by regions**
- **Provides four protection types at the page or segment level**
- **Maintains four history bits**
- **Configurable cache block size of 2, 4, 8, or 16 bytes wide**
- **Configurable cache depth of 512, 1024, or 2048 blocks**
- **Configurable page size of 1k, 2k, 4k, or 8k bytes**
- **Can use sequential accesses to fill cache if available on the system**

October 1985

PIN CONFIGURATION

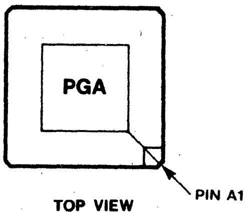

TOP VIEW

CD00110S

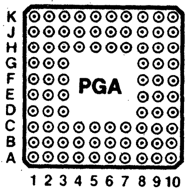

BOTTOM VIEW

CD00100S

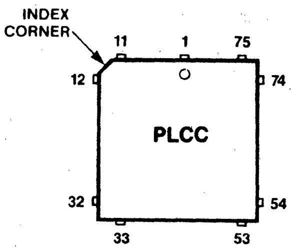

TOP VIEW

CD0084PS

PGA	Function	PGA	Function	PLCC	Function	PLCC	Function
A-1	NC	D-5	NC	G-8	NC	K-11	NC
A-2	A3	D-6	NC	G-9	NC	K-12	PA16
A-3	A4	D-7	NC	G-10	NC	K-13	PA18
A-4	A6	D-8	NC	G-11	A23	L-1	NC
A-5	A7	D-9	NC	G-12	V_{CC}	L-2	NC
A-6	A9	D-10	NC	G-13	A22	L-3	NC
A-7	CADD4	D-11	NC	H-1	D13	L-4	D5
A-8	CADD2	D-12	A14	H-2	D12	L-5	D1
A-9	CADD1	D-13	A16	H-3	D11	L-6	BERROUTN
A-10	CADD0	E-1	NC	H-4	NC	L-7	MASN
A-11	A11	E-2	R/WN	H-5	NC	L-8	CCEN
A-12	PA23	E-3	RESETN	H-6	NC	L-9	PA10
A-13	NC	E-4	NC	H-7	NC	L-10	PA14
B-1	NC	E-5	NC	H-8	NC	L-11	NC
B-2	NC	E-6	NC	H-9	NC	L-12	NC
B-3	A1	E-7	NC	H-10	NC	L-13	PA15
B-4	A24	E-8	NC	H-11	CLOCK	M-1	NC
B-5	A25	E-9	NC	H-12	BERRINN	M-2	NC
B-6	A26	E-10	NC	H-13	ASN	M-3	D4
B-7	CADD3	E-11	A15	J-1	D10	M-4	D2
B-8	A28	E-12	A17	J-2	D9	M-5	PA24
B-9	A29	E-13	A18	J-3	D7	M-6	MISS
B-10	A30	F-1	V_{CC}	J-4	NC	M-7	CWEN
B-11	A12	F-2	LDSN	J-5	NC	M-8	PA26
B-12	PA22	F-3	UDSN	J-6	NC	M-9	DTACKOUTN
B-13	NC	F-4	NC	J-7	NC	M-10	PA11
C-1	FC2	F-5	NC	J-8	NC	M-11	NC
C-2	FC1	F-6	NC	J-9	NC	M-12	NC
C-3	NC	F-7	NC	J-10	NC	M-13	NC
C-4	A2	F-8	NC	J-11	PA17	N-1	NC
C-5	A5	F-9	NC	J-12	PA19	N-2	NC
C-6	A8	F-10	NC	J-13	PA20	N-3	D3
C-7	A27	F-11	A19	K-1	D8	N-4	D0
C-8	V_{CC}	F-12	A20	K-2	D6	N-5	LOCAL
C-9	A10	F-13	A21	K-3	NC	N-6	PA25
C-10	A31	G-1	D14	K-4	NC	N-7	V_{CC}
C-11	PA21	G-2	NC	K-5	NC	N-8	DTACKINN
C-12	NC	G-3	D15	K-6	NC	N-9	LACLR
C-13	A13	G-4	NC	K-7	NC	N-10	PA27
D-1	CSN	G-5	NC	K-8	NC	N-11	PA12
D-2	FC3	G-6	NC	K-9	NC	N-12	PA13
D-3	FC0	G-7	NC	K-10	NC	N-13	NC
D-4	NC						

Basic Memory Access Controller (BMAC) SCC68906

ORDERING CODE

PACKAGES	V_{CC} = 5V ±5%, T_A = 0°C to 70°C
Ceramic PGA	SCC68906CCP120

BLOCK DIAGRAM

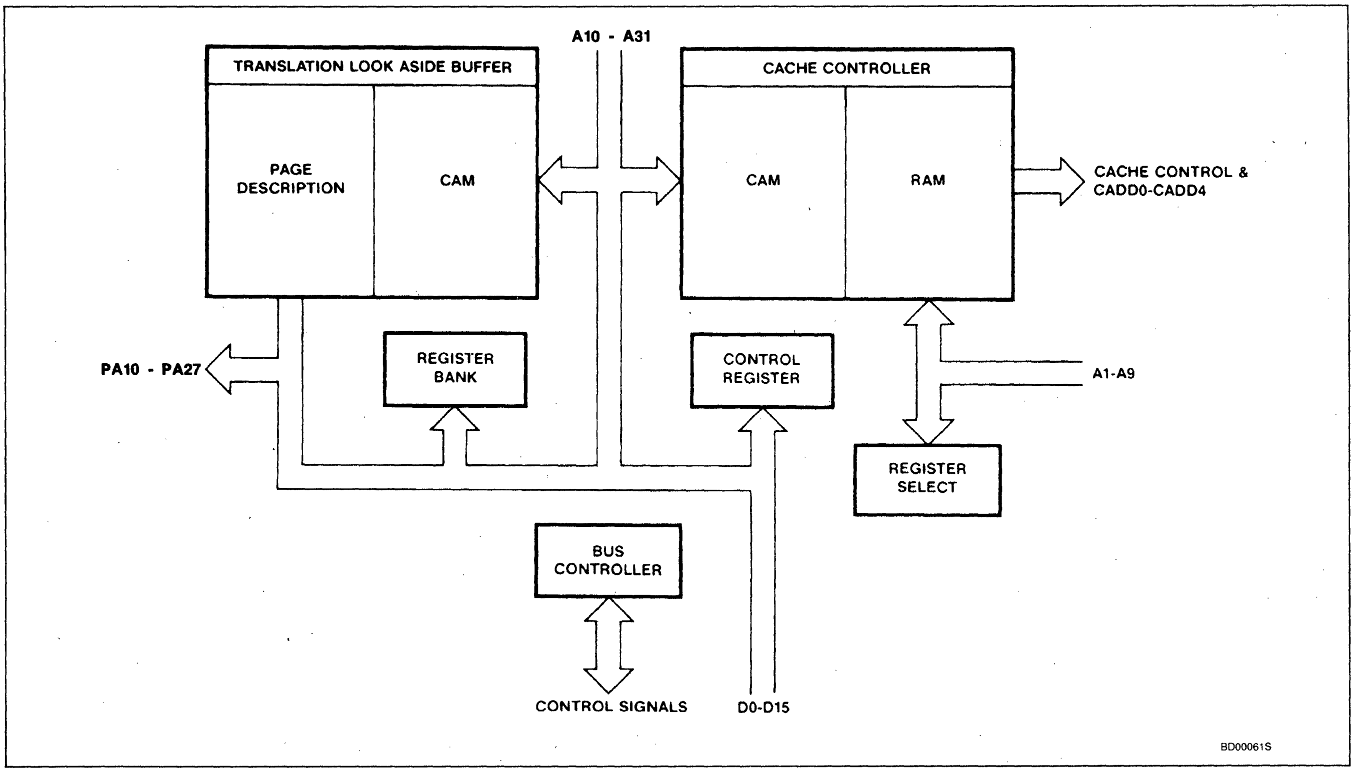
A10 - A31
TRANSLATION LOOK ASIDE BUFFER
PAGE DESCRIPTION
CAM
CACHE CONTROLLER
CAM
RAM
CACHE CONTROL &
CADD0-CADD4
PA10 - PA27
REGISTER BANK
CONTROL REGISTER
A1-A9
REGISTER SELECT
BUS CONTROLLER
CONTROL SIGNALS
D0-D15
BD00061S

October 1985

Bipolar Microprocessors 8X300 Family

PRODUCT LINE OVERVIEW

The Bipolar LSI Microprocessor product line is centered around two high-speed, Schottky-fabricated, MicroControllers and a large family of I/O devices, support ICs, and development support tools to expedite and simplify system design. No other microprocessor product line offers the advantages of the 8X300 Family in systems requiring intelligent control of high-speed data streams.

The MicroControllers themselves are capable of fetching, decoding, and executing each instruction in one machine cycle (250ns for the 8X300 and 200ns for the 8X305). A single instruction can read data from the bus, mask it, shift it, perform an ALU operation on it, rotate it, merge it, and return it to the bus. The architecture and instruction set of each processor are designed to provide high data throughput with both bit and byte oriented operations. The 8X305 offers more on-chip registers and significant data handling capability improvements over the original 8X300.

Because of its extremely high speed, the 8X300 family is able to perform through software many operations that would otherwise require additional hardware in the system. For example, using either MicroController, the 8X330 Floppy Disc Controller, and other support devices, a complete diskette drive controller can be built using only 10 Integrated Circuits. The resulting controller is programmable and capable of supporting multiple drive types and formats. Low parts counts typical of 8X300 Family designs result in reduced assembly and testing time, lower power consumption, and improved reliability.

The 8X300 Family is implemented using bipolar, Low-power Schottky technology to provide TTL speeds and drive capability without additional buffering. In addition, the family is compatible with most special-purpose devices often required in control applications. The excellent environmental characteristics of the technology make the 8X300 family ideal for military applications as well.

A complete complement of development support tools are offered to simplify design using the 8X300. A self-contained universal development system is available that supports full speed in-circuit emulation. Software tools are provided to enable use of mainframe or minicomputers to generate 8X300 software. Complete documentation is in place, including both data sheets and comprehensive reference manuals. In addition, evaluation and demonstration systems are available. To supplement these tools, Signetics employs a large, professional staff of applications engineers both in the field and at the factory to support your 8X300 design efforts.

8X300 FAMILY REFERENCE TABLE

PART NO.	PRODUCT DESCRIPTION	FUNCTION
8X300	MicroController	250ns processor for I/O and data control
8X305	MicroController	200ns processor for I/O and data control
8X310	Interrupt Controller	3 prioritzed interrupts with 4-level stack
8X320	Bus Interface Array	2-port RAM for 8/16-bit mailbox interfacing
8X330	Floppy Disk Controller	1Mb/sec data rate, programmable, supports ECC
8X350	Bipolar RAM	256 x 8 high-speed memory with bus interface
8X360	Memory Address Director	16-bit address controller for working storage
8X337	Transparent I/O Port	High-speed, 8-bit bidirectional, 3-state
8X372	Addressable I/O Port	High-speed, 8-bit bidirectional, synchronous, 3-state
8X376	Addressable I/O Port	High-speed, 8-bit bidirectional, asynchronous, 3-state
8X382	Addressable I/O Port	High-speed, 4-in/4-out, 3-state
8T31	Transparent I/O Port	8-bit bidirectional, 3-state
8T32	Addressable I/O Port	8-bit bidirectional, synchronous, 3-state
8T36	Addressable I/O Port	8-bit bidirectional, asynchronous, 3-state

Bipolar Microprocessors 8X300 Family

FEATURES	USER BENEFITS
Minimum Parts Count	Reduced Cost Extended Life of Product
Bipolar Device Using Low Power Schottky Technology	Full System Drive Without Buffering TTL Compatibility Proven Reliability
High Performance	Instruction Cycle Time of 200ns (8X305) or 250ns (8X300) Bit Addressability — Instruction Data Formats of 1-to-8 Bits Without Added Delay
Source/Destination Architecture	Efficient Use of Fixed Instruction Set Easy to Program Well-Suited for Control Applications
Design Flexibility	Single-Chip Processor Full Complement of Support Devices
After-Sales Support	Development System Training Complete Documentation Applications Support from Qualified Field Engineers

8X300 FAMILY

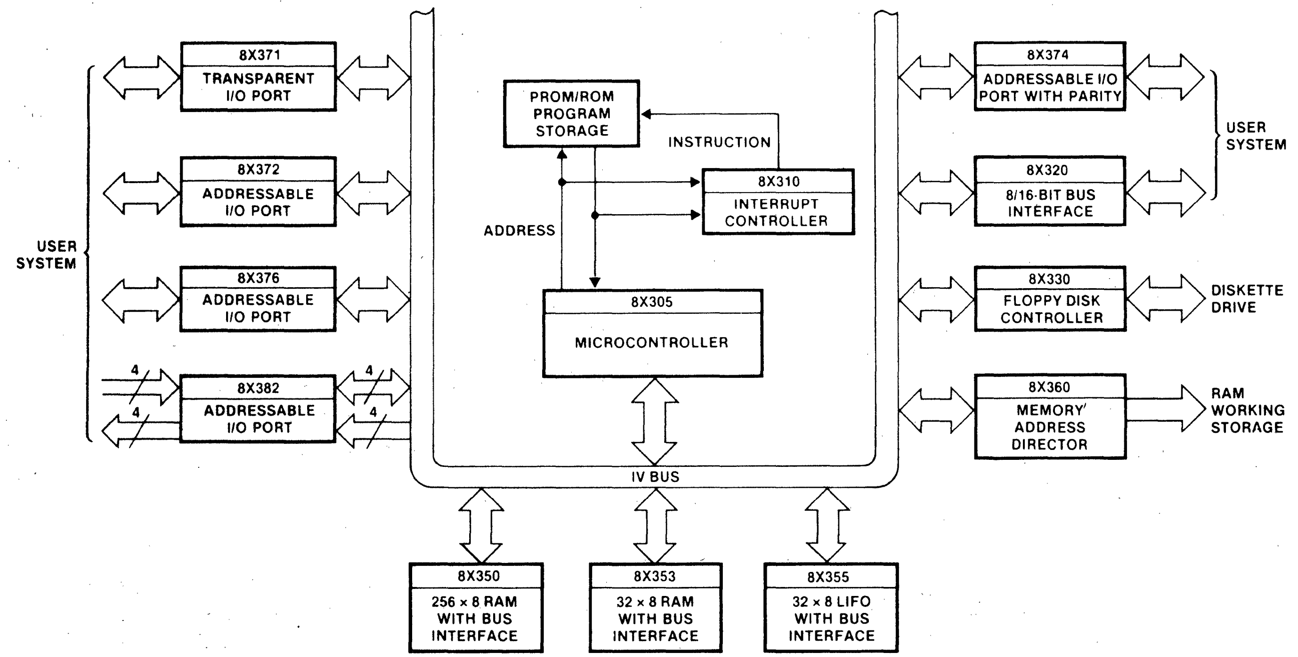
8X371
TRANSPARENT I/O PORT
8X372
ADDRESSABLE I/O PORT
8X376
ADDRESSABLE I/O PORT
8X382
ADDRESSABLE I/O PORT
4
4
4
4
USER SYSTEM
PROM/ROM PROGRAM STORAGE
INSTRUCTION
ADDRESS
8X310
INTERRUPT CONTROLLER
8X305
MICROCONTROLLER
IV BUS
8X374
ADDRESSABLE I/O PORT WITH PARITY
8X320
8/16-BIT BUS INTERFACE
USER SYSTEM
8X330
FLOPPY DISK CONTROLLER
DISKETTE DRIVE
8X360
MEMORY ADDRESS DIRECTOR
RAM WORKING STORAGE
8X350
256 × 8 RAM WITH BUS INTERFACE
8X353
32 × 8 RAM WITH BUS INTERFACE
8X355
32 × 8 LIFO WITH BUS INTERFACE

NOTES
1. The shaded devices are designed to take advantage of the improved performance of the 8X305.
2. Refer to "Reference Table" on next page for a descriptive summary of each part in the 8X300 Family.
3. The actual parts used in a specific system are selected based on the application requirements.

8X360
Memory Address Director (MAD)

Product Specification

Microprocessor Products

DESCRIPTION

The 8X360 Memory Address Director (MAD) (Figure 1), is a high-speed, performance oriented peripheral. The 8X360 reduces bookkeeping and software overhead in memory intensive systems. In a system context, the 8X360 interfaces directly with the 8X305 Microcontroller. The MAD can address up to 64K of memory and provides an efficient, cost-effective solution to applications requiring large memories and high-speed data transfers.

The 8X360 must be initialized before the registers/counters can begin data transfer. The eleven registers/counters are initialized with information such as starting/ending address, byte count, address increment/decrement, etc. The registers/counters are addressable through a select instruction from the 8X305 (conventional) or by extended microcode.

FUNCTIONAL OPERATIONS

The 8X360 has 11 registers/counters of which two, the Control and Status Register and Frequency Divider, determine the mode of operation.

The 8X360 wakes up with three registers/counter; Frequency Divide, Control and Status Register and Word Counter in a defined state; all others wake up in an undefined state (see Table 3). No address is selected when the 8X360 wakes up.

Registers

The address registers appear as two 8-bit addressable registers to the 8X305 and are initialized with a starting address. The word count register (two 8-bit addressable registers) holds a 16-bit value for either the final address or the word/byte count, depending on the mode of operation. Loading the counters from these registers is non-destructive.

FEATURES

- **Automatic Memory Address Management**
- **16-Bit Address Capability**
- **11 Addressable Registers for Maximum Flexibility**
- **Directly Compatible with the 8X305 Microcontroller**
- **Bipolar ISL and Low-Power Schottky Technology**
- **Multiple Clock Modes with Programmable Frequency Divider**
- **Terminal Count End-of-Block Indicator**
- **40-Pin Dual In-Line Package**

Counters

The 16-bit address and word counters appear as two 8-bit addressable registers. The address counter counts up or down from the current address by 1 or 2, with its output available on 16 three-state output pins which are enabled through the TSCL pin. The word counter counts down from an initialized number of bytes or words, or stores the final address.

I/O Register

The I/O register stores a special 8-bit address from 0–255. In the I/O clocking mode, an address on the $\overline{IV}$ bus and the stored address are compared after the rising edge of MCLK. A match produces an internal clock which clocks the 8X360 counters.

STATUS REGISTERS

Command Status

The CSR is an 8-bit addressable register with its most significant bit (bit 0) not used. The other seven bits control the overall operations such as: the address counter step length and direction, the mode of operation, the counter load and enable functions, the loop abort and terminal count actions. (See Table 1 for a summary of this Register.)

PIN CONFIGURATION

N, I PACKAGE

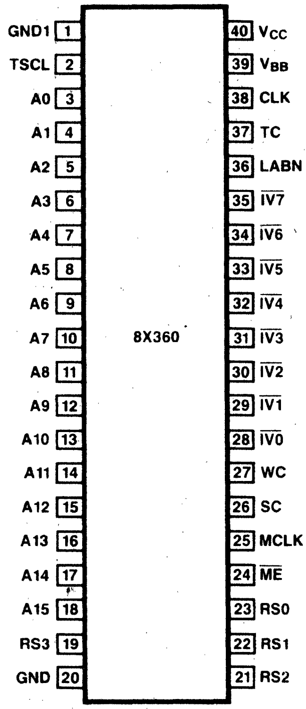

TOP VIEW
Order Numbers
N8X360N, N8X360I

Bits 1 and 2 (Address Counter Step Length and Direction) — Bit 1 selects a counter step length of 1 or 2 when programmed to a logic 0 or 1, respectively. Bit 2 determines the address counter direction, a logic 0 for up or a logic 1 for down.

Signetics

8X401
Microcontroller

Product Specification

Microprocessor Products

PRODUCT DESCRIPTION

The Signetics 8X401 Microcontroller is a very high-speed bipolar microprocessor implemented with internal ECL technology. The 8X401 Microcontroller combines speed, flexibility, and a bit-oriented instruction set to accommodate many sophisticated applications. It excels in systems that require high-speed bit or byte manipulations, such as high-speed controllers and data communications.

The 8X401 can fetch, execute, and generate the next instruction address for a 20-bit instruction in a minimum of 150 nanoseconds. Within one instruction cycle, the 8X401 can be programmed to input, right-rotate and mask single or multiple bit subfields, perform an ALU operation, left-rotate, merge the subfield into the destination, and output.

To interface with program memory, the 8X401 uses a 13-bit address bus and a 20-bit instruction bus. An 8-bit bidirectional data/address bus, and an I/O control and timing bus is used to access external peripheral devices.

FEATURES

- **Fetches and executes all instructions in a minimum of 150 nanoseconds**
- **Bit manipulation-oriented instruction set**
- **Separate buses for instruction, instruction address and I/O**
- **Sixteen 8-bit registers**
- **On-chip interrupt control**
- **TTL compatible I/O**
- **Single +5V supply**
- **0.9-inch 64-pin DIP, 68-pin plastic leaded chip carrier**
- **Two user-definable status flags**
- **Single TTL clock input**
- **Three independent I/O banks**
- **On-board control sequencer**
- **On-chip subroutine capabilities**
- **Fixed instruction set — 32 instructions**
- **Complete development support**

PIN CONFIGURATION

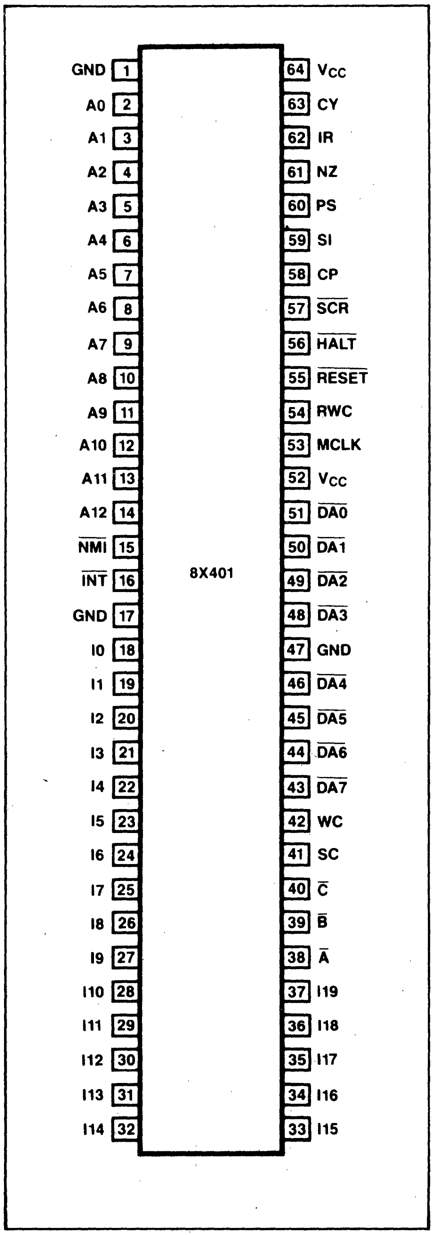
8X401
GND 1
A0 2
A1 3
A2 4
A3 5
A4 6
A5 7
A6 8
A7 9
A8 10
A9 11
A10 12
A11 13
A12 14
$\overline{\text{NMI}}$ 15
$\overline{\text{INT}}$ 16
GND 17
I0 18
I1 19
I2 20
I3 21
I4 22
I5 23
I6 24
I7 25
I8 26
I9 27
I10 28
I11 29
I12 30
I13 31
I14 32
64 Vcc
63 CY
62 IR
61 NZ
60 PS
59 SI
58 CP
57 $\overline{\text{SCR}}$
56 $\overline{\text{HALT}}$
55 $\overline{\text{RESET}}$
54 RWC
53 MCLK
52 Vcc
51 $\overline{\text{DA0}}$
50 $\overline{\text{DA1}}$
49 $\overline{\text{DA2}}$
48 $\overline{\text{DA3}}$
47 GND
46 $\overline{\text{DA4}}$
45 $\overline{\text{DA5}}$
44 $\overline{\text{DA6}}$
43 $\overline{\text{DA7}}$
42 WC
41 SC
40 $\overline{\text{C}}$
39 $\overline{\text{B}}$
38 $\overline{\text{A}}$
37 I19
36 I18
35 I17
34 I16
33 I15

November 1985

Signetics

8X450
RAM

Preliminary Specification

Microprocessor Products

DESCRIPTION

The 8X450 is a 256-byte RAM designed primarily as a working storage element for 8X401 and 8X305 based systems. The 8X450 can be used as a dedicated RAM or in groups of RAMs to form a customized memory stack.

FEATURES

- **256-byte RAM**
- **Two modes of operation**
- **Paged RAM capability**
- **On-chip address latches**
- **Directly bus compatible with the 8X401 and 8X305 microcontrollers**
- **24-pin slim line package**
- **Single + 5-volt supply**

PIN CONFIGURATION

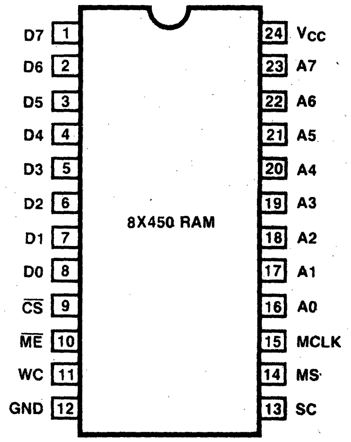
D7 1
D6 2
D5 3
D4 4
D3 5
D2 6
D1 7
D0 8
$\overline{CS}$ 9
$\overline{ME}$ 10
WC 11
GND 12
24 V_{CC}
23 A7
22 A6
21 A5
20 A4
19 A3
18 A2
17 A1
16 A0
15 MCLK
14 MS
13 SC
8X450 RAM

TOP VIEW
Ordering Information
N8X450N
N8X450I

8X450 BLOCK DIAGRAM

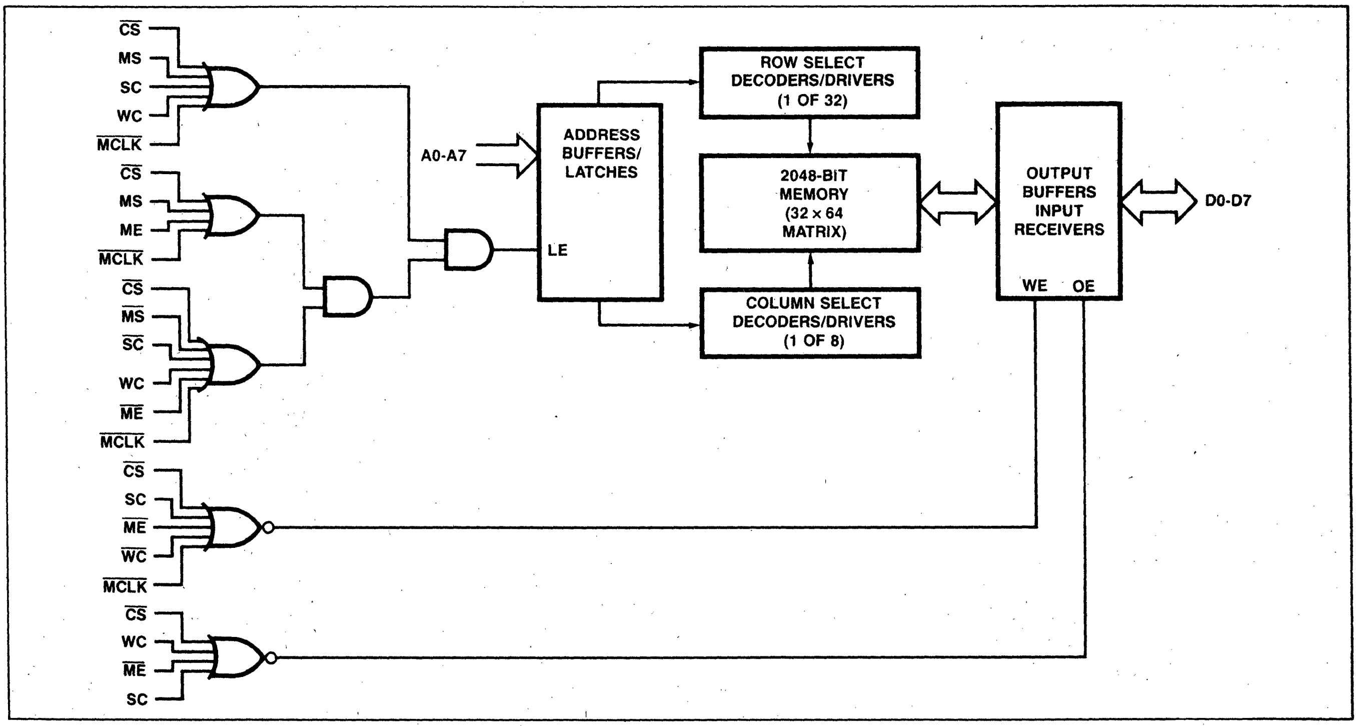
$\overline{CS}$
MS
SC
WC
$\overline{MCLK}$
$\overline{CS}$
MS
ME
$\overline{MCLK}$
$\overline{CS}$
$\overline{MS}$
$\overline{SC}$
WC
$\overline{ME}$
$\overline{MCLK}$
$\overline{CS}$
SC
$\overline{ME}$
$\overline{WC}$
$\overline{MCLK}$
$\overline{CS}$
WC
$\overline{ME}$
SC
A0-A7
ADDRESS BUFFERS/ LATCHES
LE
ROW SELECT DECODERS/DRIVERS (1 OF 32)
2048-BIT MEMORY (32 x 64 MATRIX)
COLUMN SELECT DECODERS/DRIVERS (1 OF 8)
OUTPUT BUFFERS INPUT RECEIVERS
WE
OE
D0-D7

October 1985

Signetics

8X470
I/O Port

Preliminary Specification

Microprocessor Products

PRODUCT DESCRIPTION

The 8X470 I/O Port (Figure 1) is a fuse-programmable device designed to interface a user system with a Signetics 8X401 Microcontroller. The 8X470 has three internal registers — a data register and two status registers. The data register is shared between the two systems, while each system has its own dedicated status register. The 8X470 can be programmed to provide a bidirectional or unidirectional user interface with the user data entry being either synchronous or asynchronous with the 8X401.

FEATURES

- **Two independent 8-bit busses**
- **Fast polling**
- **Directly bus-compatible with the 8X401, 8X305 Microcontrollers**
- **256 Data Addresses**
- **Separate Controller and User status registers**
- **16 Status Addresses**
- **Positionable Controller Status Register output**
- **Bidirectional or unidirectional I/O capability**
- **Synchronous or asynchronous user data entry**
- **Conventional $\overline{DA}$ or Fast select addressing techniques**
- **24-pin slimline package**
- **Single +5 volt supply**

PIN CONFIGURATION

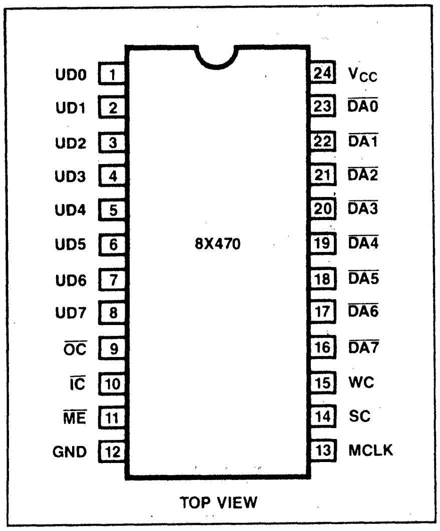
UD0 1
UD1 2
UD2 3
UD3 4
UD4 5
UD5 6
UD6 7
UD7 8
$\overline{OC}$ 9
$\overline{IC}$ 10
$\overline{ME}$ 11
GND 12
24 V_{CC}
23 $\overline{DA0}$
22 $\overline{DA1}$
21 $\overline{DA2}$
20 $\overline{DA3}$
19 $\overline{DA4}$
18 $\overline{DA5}$
17 $\overline{DA6}$
16 $\overline{DA7}$
15 WC
14 SC
13 MCLK
8X470
TOP VIEW

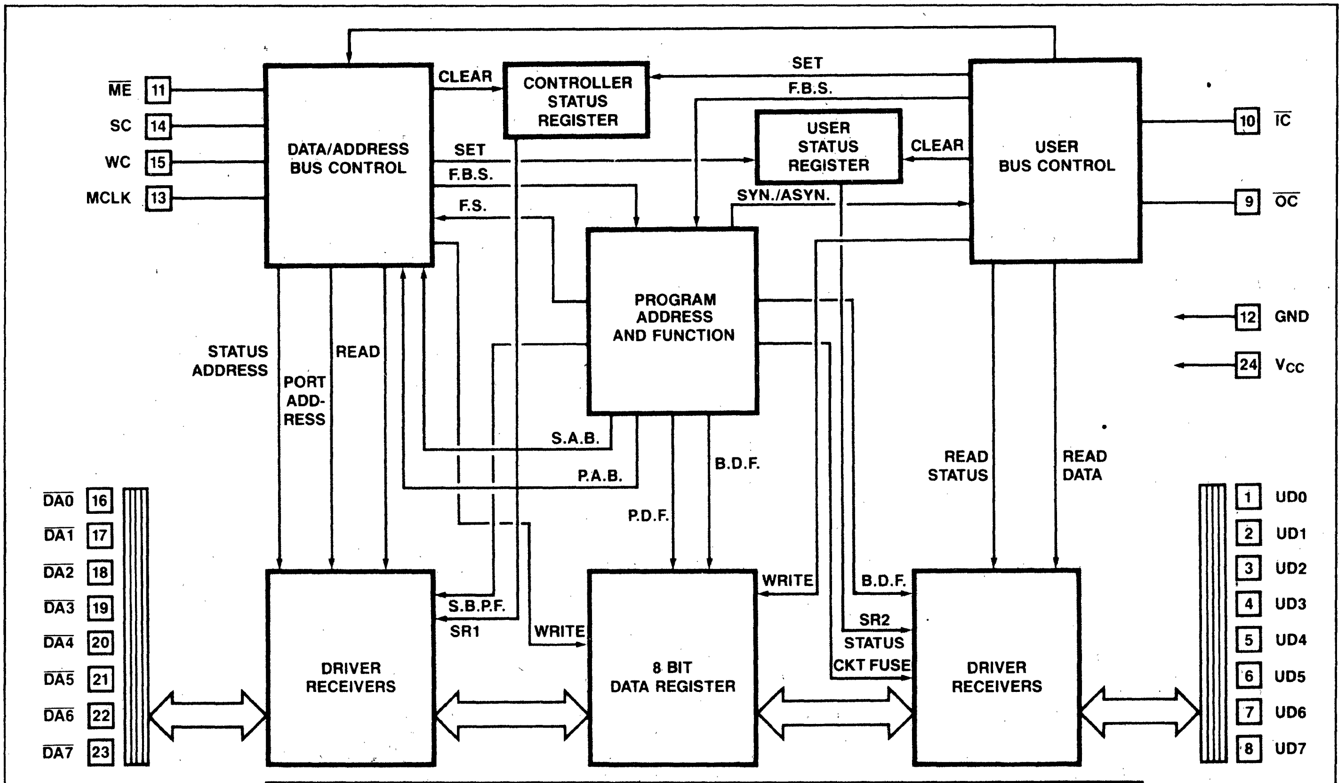
$\overline{ME}$ 11
SC 14
WC 15
MCLK 13
DATA/ADDRESS BUS CONTROL
CLEAR
CONTROLLER STATUS REGISTER
SET
F.B.S.
SET
F.B.S.
F.S.
USER STATUS REGISTER
CLEAR
USER BUS CONTROL
SYN./ASYN.
10 $\overline{IC}$
9 $\overline{OC}$
PROGRAM ADDRESS AND FUNCTION
12 GND
24 V_{CC}
STATUS ADDRESS
READ
PORT ADDRESS
S.A.B.
P.A.B.
B.D.F.
P.D.F.
READ STATUS
READ DATA
$\overline{DA0}$ 16
$\overline{DA1}$ 17
$\overline{DA2}$ 18
$\overline{DA3}$ 19
$\overline{DA4}$ 20
$\overline{DA5}$ 21
$\overline{DA6}$ 22
$\overline{DA7}$ 23
DRIVER RECEIVERS
S.B.P.F.
SR1
WRITE
8 BIT DATA REGISTER
WRITE
B.D.F.
SR2
STATUS CKT FUSE
DRIVER RECEIVERS
1 UD0
2 UD1
3 UD2
4 UD3
5 UD4
6 UD5
7 UD6
8 UD7

SIGNAL DESCRIPTION

B.D.F. = BIT DIRECTION FUSE
F.B.S. = FUSE BANK SELECT
F.S. = FAST SELECT
I.I.C. = BUFFERED IC
P.A.B. = PORT ADDRESS BIT
P.D.F. = PORT DIRECTION FUSE
S.A.B. = STATUS ADDRESS BIT
S.B.P.F. = STATUS BIT POSITION FUSE

Figure 1. 8X470 Block Diagram

November 1985

SCB68172
VMEbus Controller (BUSCON)

Advance Information

Microprocessor Products

DESCRIPTION

The Signetics SCB68172 VMEbus Controller (BUSCON) is an interface device for the VMEbus. It can be used in three different configurations: master-only, slave-only, and master/slave. The SCB68172 can be used with a processor-type interface or with a DMA controller-type interface. In all configurations, it handles the VMEbus signaling protocol in compliance with revisions B and C of the VMEbus Specification.

CONFIGURATION/VERSION

Applications of the BUSCON are identified as follows (see figures 1 through 4):

VERSION	APPLICATION
PMS	Processor-type master/slave
DMAC	DMA controller-type master/ slave
MS	Either PMS or (DMAC)
M	Master-only
S	Slave-only

All of these applications are handled by the SCB68172, with unused pins tied to stated logic levels in some of the applications.

Figure 5 shows a functional model of the SCB68172 logic. The ASN, MASN, LBRN, BGINN, and RELSE inputs are internally synchronized to CLK before being presented to the state machine which determines the major functions of the device. The SLVN, ONBD, and VMEN signals are used directly in the state machine, although they are highly qualified to prevent metastable conditions on the state machine outputs. The BRN, BBSYN and LBGN signals are direct state machine outputs, while ASN, MASTENN, VMEENN, SLVSELN, and BGOUTN are derived from the state machine outputs plus some combinatorial qualification.

The DSI, R/WN, DTACKN, BERRN, LDTACKN, and LBERRN inputs function largely as direct combinatorial inputs. The DDIR, DTACKN, BERRN, LDTACKN, LBERRN, and (when applicable) MASN outputs are largely derived directly from these direct inputs, with some qualification from the state machine outputs. The DENN and DSENN outputs have complex multi-case logic which uses both the direct inputs and the state machine outputs.

February 20, 1985

FEATURES

- **Master, slave, or master/slave (dual ported) applications**
- **Helps assure VMEbus compatibility**
- **Allows for address decoding time**
- **Processor or DMA controller interface for master/requester**
- **Master/requester logic allows release on request (ROR) or release when done (RWD) operation, early or intercycle release**
- **Supports and exploits address lookahead**

PIN CONFIGURATION

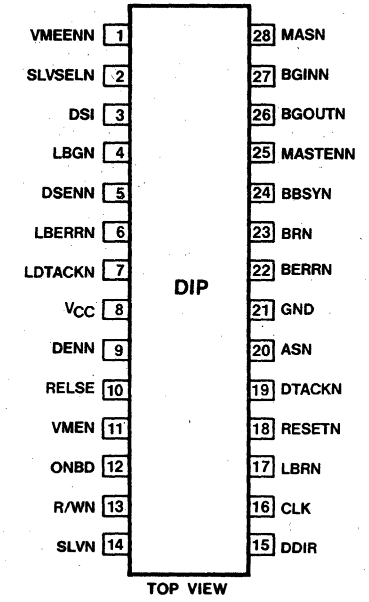

TOP VIEW

CD00872S

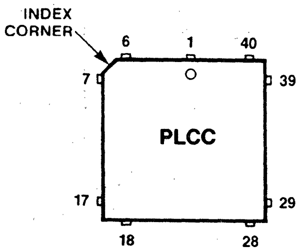

TOP VIEW

CD0044PS

Pin	Function	Pin	Function
1	NC	23	NC
2	VMEENN	24	DDIR
3	SLVSELN	25	CLK
4	DSI	26	LBRN
5	LBGN	27	RESETN
6	NC	28	NC
7	NC	29	NC
8	DSENN	30	DTACKN
9	LBERRN	31	ASN
10	NC	32	NC
11	LDTACKN	33	GND
12	NC	34	NC
13	V_{CC}	35	BERRN
14	NC	36	NC
15	DENN	37	BRN
16	RELSE	38	BBSYN
17	NC	39	NC
18	NC	40	NC
19	VMEN	41	MASTENN
20	ONBD	42	BGOUTN
21	R/WN	43	BGINN
22	SLVN	44	MASN

SIGNETICS HEADQUARTERS

811 East Arques Avenue
P.O. Box 3409
Sunnyvale, California 94088-3409
Phone: (408) 991-2000

ALABAMA
Huntsville
Phone: (205) 830-4001

ARIZONA
Phoenix
Phone: (602) 265-4444

CALIFORNIA
Canoga Park
Phone: (818) 340-1431

Irvine
Phone: (714) 833-8980
(213) 588-3281

Los Angeles
Phone: (213) 670-1101

San Diego
Phone: (619) 560-0242

Sunnyvale
Phone: (408) 991-3737

COLORADO
Aurora
Phone: (303) 751-5011

CONNECTICUT
Brookfield
Phone: (203) 775-6888

FLORIDA
Clearwater
Phone: (813) 796-7086

Ft. Lauderdale
Phone: (305) 486-6300

GEORGIA
Atlanta
Phone: (404) 953-0067

ILLINOIS
Itasca
Phone: (312) 250-0050

INDIANA
Kokomo
Phone: (317) 453-6462

KANSAS
Overland Park
Phone: (913) 469-4005

MARYLAND
Glen Burnie
Phone: (301) 787-0220

MASSACHUSETTS
Littleton
Phone: (617) 486-8411

MICHIGAN
Farmington Hills
Phone: (313) 476-1610

MINNESOTA
Edina
Phone: (612) 835-7455

NEW JERSEY
Parsippany
Phone: (201) 334-4405

NEW YORK
Hauppauge
Phone: (516) 348-7877

Liverpool
Phone: (315) 451-5470

Wappingers Falls
Phone: (914) 297-4074

NORTH CAROLINA
Cary
Phone: (919) 481-0400

OHIO
Worthington
Phone: (614) 888-7143

OREGON
Portland
Phone: (503) 297-5592

PENNSYLVANIA
Horsham
Phone: (215) 443-5500

TENNESSEE
Greeneville
Phone: (615) 639-0251

TEXAS
Austin
Phone: (512) 339-9944

Richardson
Phone: (214) 644-3500

CANADA
SIGNETICS CANADA, LTD.
Etobicoke, Ontario
Phone: (416) 626-6676

Nepean, Ontario
Signetics Canada, Ltd
Phone: (613) 726-9576

REPRESENTATIVES

ARIZONA
Scottsdale
Thom Luke Sales, Inc.
Phone: (602) 941-1901

CALIFORNIA
Los Gatos
Magna Sales, Inc.
Phone: (408) 354-1626

Santa Clara
Magna Sales
Phone: (408) 727-8753

San Diego
Mesa Engineering
Phone: (619) 278-8021

CONNECTICUT
Brookfield
Kanan Associates
Phone: (203) 775-0494

FLORIDA
Pompano Beach
V/G Sales
Phone: (305) 971-0900

ILLINOIS
Hoffman Estates
Micro-Tex, Inc
Phone: (312) 382 3001

IOWA
Marion
Rep Associates Corp
Phone: (319) 373 0152

KANSAS
Kansas City
B. C. Electronic Sales
Phone: (913) 342 1211

Wichita
B. C. Electronic Sales
Phone: (316) 722-0104

MARYLAND
Columbia
Delta III
Phone: (301) 730-4700

MASSACHUSETTS
Needham Heights
Kanan Associates
Phone: (617) 449-7400

MICHIGAN
Bloomfield Hills
Enco Marketing
Phone: (313) 642 0203

MINNESOTA
Eden Prairie
High Technology Sales
Phone: (612) 944-7274

MISSOURI
Bridgeton
B. C. Electronic Sales
Phone: (314) 291-1101

NEW JERSEY
East Hanover
Emtec Sales, Inc
Phone: (201) 428-0600

NEW MEXICO
Albuquerque
F. P. Sales
Phone: (505) 345 5553

NEW YORK
Ithaca
Bob Dean, Inc
Phone: (607) 257-1111

Melville
Emtec Sales, Inc.
Phone: (516) 752-1630

OHIO
Cincinnati
Stegman Blaine Marketing, Inc
Phone: (513) 729-1969

Cleveland
Stegman Blaine Marketing, Inc
Phone: (216) 331-4474

Vandalia
Stegman Blaine Marketing, Inc
Phone: (513) 832 2488

OKLAHOMA
Tulsa
Jerry Robinson and Associates
Phone: (918) 665-3562

OREGON
Hillsboro
Western Technical Sales
Phone: (503) 640-4621

PENNSYLVANIA
Horsham
Delta Technical Sales Inc
Phone: (215) 443-5503

Pittsburgh
Covert & Newman
Phone: (412) 531-2002

TEXAS
Houston
OM Sales
Phone: (713) 789-4426

UTAH
Salt Lake City
Electrodyne
Phone: (801) 486-3801

WASHINGTON
Bellevue
Western Technical Sales
Phone: (206) 641-3900

Spokane
Western Technical Sales
Phone: (509) 922-7600

WISCONSIN
Waukesha
Micro-Tex, Inc
Phone: (414) 542 5352

CANADA
Nepean, Ontario
Tech-Trek, Ltd.
Phone: (613) 564-0049

Pointe Claire, Quebec
Tech-Trek, Ltd.
Phone: (514) 697-3385

Rexdale, Ontario
Tech-Trek, Ltd
Phone: (416) 674-1717

Richmond, B.C.
Tech-Trek, Ltd.
Phone: (604) 271-3149

Winnipeg, Manitoba
Tech-Trek, Ltd
Phone: (204) 222-1321

DISTRIBUTORS

ALABAMA
Huntsville
Hamilton/Avnet Electronics
Phone: (205) 837-7210
Schweber Electronics
Phone: (205) 882-2200

ARIZONA
Phoenix
Schweber Electronics
Phone: (602) 997-4874
Wyle LEMG
Phone: (602) 249-2232

Tempe
Arrow Electronics
Phone: (602) 968-4800
Hamilton/Avnet Electronics
Phone: (602) 231 5100

CALIFORNIA
Calabasas
Wyle LEMG
Phone: (818) 880 9000

Canoga Park
Schweber Electronics
Phone: (818) 999 4702

Chatsworth
Anthem Electronics
Phone: (818) 700 1000
Arrow Electronics
Phone: (818) 701 7500
Avnet Electronics
Phone: (818) 700 2600
Hamilton/Avnet Electronics
Phone: (818) 700 6500

Costa Mesa
Avnet Electronics
Phone: (714) 754-6111
Hamilton Electro Sales
Phone: (714) 641 4100

Culver City
Hamilton Electro Sales
Phone: (213) 558 2121

Garden Grove
Wyle LEMG Computer Products
Phone: (714) 891 1717

Gardena
Schweber Electronics
Phone: (213) 327 8409

Hayward
Arrow Electronics
Phone: (415) 487 4600

Irvine
Anthem Electronics
Phone: (714) 768-4444
Schweber Electronics
Phone: (714) 863-0200
Wyle LEMG
Phone: (714) 863 1611

Ontario
Hamilton/Avnet Electronics
Phone: (714) 989 4602

Rancho Cordova
Wyle LEMG
Phone: (916) 638 5282

Sacramento
Hamilton/Avnet Electronics
Phone: (916) 925-2216
Schweber Electronics
Phone: (916) 929 9732

San Diego
Anthem Electronics
Phone: (619) 453 4871
Arrow Electronics
Phone: (619) 565 4800
Hamilton/Avnet Electronics
Phone: (619) 571 7510
Schweber Electronics
Phone: (619) 450-0454
Wyle LEMG
Phone: (619) 565 9171

San Jose
Anthem Electronics Inc
Phone: (408) 946 8000
Schweber Electronics
Phone: (408) 946 7171

Santa Clara
Wyle LEMG
Phone: (408) 727 2500

Sunnyvale
Arrow Electronics
Phone: (408) 745 6600
Hamilton/Avnet Electronics
Phone: (408) 743 3355

Tustin
Arrow Electronics
Phone: (714) 838 5422

Woodland Hills
Avnet Electronics
Phone: (818) 700-2600

COLORADO
Aurora
Arrow Electronics
Phone: (303) 696 1111

Denver
Wyie Distribution Group
Phone: (303) 457 9953

Englewood
Anthem Electronics
Phone: (303) 790 4500
Hamilton/Avnet Electronics
Phone: (303) 779-9998
Schweber Electronics
Phone: (303) 799-0258

Thornton
Wyle LEMG
Phone: (303) 457-9953

CONNECTICUT
Danbury
Hamilton/Avnet Electronics
Phone: (203) 797-2800
Schweber Electronics
Phone: (203) 748-7080

Meriden
Lionex Corp
Phone: (203) 237 2282

Wallingford
Arrow Electronics
Phone: (203) 265-7741

FLORIDA
Altomont Springs
Schweber Electronics
Phone: (305) 331-7555

Deerfield Beach
Arrow Electronics
Phone: (305) 429-8200

Ft. Lauderdale
Hamilton/Avnet Electronics
Phone: (305) 971-2900

Hollywood
Schweber Electronics
Phone: (305) 927-0511

Palm Bay
Arrow Electronics
Phone: (305) 725-1480

St. Petersburg
Hamilton/Avnet Electronics
Phone: (813) 576 3930

Winter Park
Hamilton/Avnet Electronics
Phone: (305) 628 3888

GEORGIA
Norcross
Arrow Electronics
Phone: (404) 449-8252
Hamilton/Avnet Electronics
Phone: (404) 447 7507
Schweber Electronics
Phone: (404) 449-9170

ILLINOIS
Elk Grove
Schweber Electronics
Phone: (312) 364 3750

Schaumburg
Arrow Electronics
Phone: (312) 397 3440

Bensenville
Hamilton/Avnet Electronics
Phone: (312) 860 7700

INDIANA
Carmel
Hamilton/Avnet Electronics
Phone: (317) 844 9333

Indianapolis
Arrow Electronics
Phone: (317) 243 9353

IOWA
Cedar Rapids
Hamilton/Avnet Electronics
Phone: (319) 362 4757
Schweber Electronics
Phone: (319) 373 1417

KANSAS
Overland Park
Hamilton/Avnet Electronics
Phone: (913) 888-8900
Schweber Electronics
Phone: (913) 492 2921

MARYLAND
Columbia
Arrow Electronics
Phone: (301) 995-0003
Hamilton/Avnet Electronics
Phone: (301) 995 3500
Lionex Corp
Phone: (301) 964-0040

Gaithersburg
Schweber Electronics
Phone: (301) 840 5900

MASSACHUSETTS
Wilmington
Lionex Corp
Phone: (617) 657 5170
Schweber Electronics
Phone: (617) 275 5100

Woburn
Arrow Electronics
Phone: (617) 933 8130
Hamilton/Avnet Electronics
Phone: (617) 273 7500

MICHIGAN
Ann Arbor
Arrow Electronics
Phone: (313) 971 8220

Grand Rapids
Hamilton/Avnet Electronics
Phone: (616) 243 8805

Livonia
Hamilton/Avnet Electronics
Phone: (313) 522 4700
Schweber Electronics
Phone: (313) 525 8100

MINNESOTA
Edina
Arrow Electronics
Phone: (612) 830-1800
Schweber Electronics
Phone: (612) 941 5280

Minnetonka
Hamilton/Avnet Electronics
Phone: (612) 932 0600

MISSOURI
Earth City
Hamilton/Avnet Electronics
Phone: (314) 344 1200
Schweber Electronics
Phone: (314) 739-0526

St. Louis
Arrow Electronics
Phone: (314) 567-6888

NEW HAMPSHIRE
Manchester
Arrow Electronics
Phone: (603) 668-6968
Hamilton/Avnet Electronics
Phone: (603) 624-9400
Schweber Electronics
Phone: (603) 625 2250

NEW JERSEY
Cherry Hill
Hamilton/Avnet Electronics
Phone: (609) 424-0100

Fairfield
Arrow Electronics
Phone: (201) 575-5300
Hamilton/Avnet Electronics
Phone: (201) 575 3390
Lionex Corporation
Phone: (201) 227 7960
Schweber Electronics
Phone: (201) 227 7880

Marlton
Arrow Electronics
Phone: (609) 596 8000

NEW MEXICO
Albuquerque
Hamilton/Avnet Electronics
Phone: (505) 765 1500
Arrow Electronics
Phone: (505) 243-4566

NEW YORK
Buffalo
Summit Distributors
Phone: (716) 887 2800

East Syracuse
Hamilton/Avnet Electronics
Phone: (315) 437 2641

Hauppauge, L.I.
Arrow Electronics
Phone: (516) 231-1000
Hamilton/Avnet Electronics
Phone: (516) 231-9800
Lionex Corp.
Phone: (516) 273-1660

Liverpool
Arrow Electronics
Phone: (315) 652-1000

Rochester
Arrow Electronics
Phone: (716) 427-0300
Hamilton/Avnet Electronics
Phone: (716) 475-9130
Schweber Electronics
Phone: (716) 424-2222

Westbury, L.I.
Schweber Electronics
Phone: (516) 334-7474

NORTH CAROLINA
Raleigh
Arrow Electronics
Phone: (919) 876-3132
Hamilton/Avnet Electronics
Phone: (919) 878-0810
Schweber Electronics
Phone: (919) 876-0000

OHIO
Beechwood
Schweber Electronics
Phone: (216) 464-2970

Centerville
Arrow Electronics
Phone: (513) 435 5563

Cleveland
Hamilton/Avnet Electronics
Phone: (216) 831 3500

Dayton
Hamilton/Avnet Electronics
Phone: (513) 439-6700
Schweber Electronics
Phone: (513) 439 1800

Solon
Arrow Electronics
Phone: (216) 248 3990

Westerville
Hamilton/Avnet Electronics
Phone: (614) 882-7004

OKLAHOMA
Tulsa
Quality Components
Phone: (918) 664-8812
Schweber Electronics
Phone: (918) 622-8000

OREGON
Hillsboro
Wyle LEMG
Phone: (503) 640-6000

Lake Oswego
Anthem Electronics
Phone: (503) 684-2661
Hamilton/Avnet Electronics
Phone: (503) 635-8831

Tigard
Arrow Electronics
Phone: (503) 684-1690

PENNSYLVANIA
Horsham
Lionex Corp
Phone: (215) 443 5150
Schweber Electronics
Phone: (215) 441-0600

Monroeville
Arrow Electronics
Phone: (412) 856 7000

Pittsburgh
Hamilton/Avnet Electronics
Phone: (412) 281-4150
Schweber Electronics
Phone: (412) 782-1600

TEXAS
Addison
Quality Components
Phone: (214) 733-4300

Austin
Arrow Electronics
Phone: (512) 835-4180
Hamilton/Avnet Electronics
Phone: (512) 837-8911
Quality Components
Phone: (512) 835-0220
Wyle LEMG
Phone: (512) 834-9957
Schweber Electronics
Phone: (512) 458-8253

Carrolton
Arrow Electronics
Phone: (214) 380-6464

Dallas
Schweber Electronics
Phone: (214) 661-5010

Houston
Arrow Electronics
Phone: (713) 530-4700
Hamilton/Avnet Electronics
Phone: (713) 780-1771
Schweber Electronics
Phone: (713) 784-3600
Wyle LEMG
Phone: (713) 879-9953

Irving
Hamilton/Avnet Electronics
Phone: (214) 659-4111

Richardson
Wyle LEMG
Phone: (214) 235-9953

Sugar Land
Quality Components
Phone: (713) 240-2255

UTAH
Salt Lake City
Anthem Electronics
Phone: (801) 973-8555
Arrow Electronics
Phone: (801) 972-0404
Hamilton/Avnet Electronics
Phone: (801) 972-2800
Wyle LEMG
Phone: (801) 974-9953

WASHINGTON
Bellevue
Arrow Electronics
Phone: (206) 643-4800
Hamilton/Avnet Electronics
Phone: (206) 453-5844
Wyle LEMG
Phone: (206) 453-8300

Redmond
Anthem Electronics
Phone: (206) 881-0850

WISCONSIN
Brookfield
Schweber Electronics
Phone: (414) 784-9020

New Berlin
Hamilton/Avnet Electronics
Phone: (414) 784-4510

Oak Creek
Arrow Electronics
Phone: (414) 764-6600

CANADA
Brampton, Ontario
Zentronics, Ltd
Phone: (416) 451-9600

Burnaby, Vancouver
Hamilton/Avnet Electronics
Phone: (604) 272-4242

Calgary, Alberta
Hamilton/Avnet Electronics
Phone: (403) 230-3586
Zentronics, Ltd
Phone: (403) 272-1021

Downsview, Ontario
Arrow/Cesco
Phone: (416) 661-0220

Mississauga, Ontario
Hamilton/Avnet Electronics
Phone: (416) 677-7432

Montreal, Quebec
Arrow/Cesco
Phone: (514) 735 5511
Zentronics, Ltd.
Phone: (514) 735-5361

Nepean, Ontario
Arrow/Cesco
Phone: (613) 226-6903
Hamilton/Avnet Electronics
Phone: (613) 226-1700
Zentronics, Ltd.
Phone: (613) 226-8840

Quebec, Quebec
Arrow/Cesco
Phone: (418) 687-4231

Richmond, B.C.
Zentronics, Ltd.
Phone: (604) 273-5575

Ville St. Laurent, Quebec
Hamilton/Avnet Electronics
Phone: (514) 335-1000
Zentronics, Ltd.
Phone: (514) 735-5361

Waterloo
Zentronics, Ltd.
Phone: (519) 884-5700

Winnipeg
Zentronics, Ltd.
Phone: (204) 775-8661

FOR SIGNETICS PRODUCTS WORLDWIDE:

ARGENTINA
Philips Argentina S.A.
Buenos Aires
Phone: (1) 652-3983

AUSTRALIA
Philips Industries Holdings Ltd.
Artarmon, N.S.W.
Phone: (2) 439-3322

AUSTRIA
Osterrichische Philips Bauelemente
Wien
Phone: 43-222-93-26-2

BELGIUM
N. V. Philips & MBLE
Bruxelles
Phone: 32-02-242-7400

BRAZIL
Ibrape
Sao Paulo
Phone: (11) 211-2600

CHILE
Philips Chilena S.A.
Santiago
Phone: (2) 39-4001

DENMARK
Miniwatt A/S
Kobenhavn N.V
Phone: 45-01-69-1622

FINLAND
Oy Philips Ab
Helsinki
Phone: 358-1-7271

FRANCE
R.T.C. La Radiotechnique-Compelec
Paris
Phone: 33 1 338.8000

GERMANY
Valvo
Hamburg
Phone: 49-40-3296-19

GREECE
Philips S.A. Hellenique
Athens
Phone: 9215111

HONG KONG
Philips Hong Kong, Ltd.
Kwai Chung
Phone: (0) 245121

INDIA
Philips India & Elect. Ltd.
Bombay
Phone: (22) 212628

INDONESIA
P.T. Philips-Ralin Electronics
Jakarta
Phone: (21) 512572

IRELAND
Philips Electrical Ltd.
Dublin
Phone: 353-1-69-3355

ISRAEL
Rapac Electronics, Ltd.
Tel Aviv
Phone: (3) 477115

ITALY
Philips S.p.A.
Milano
Phone: 39-2-6994

JAPAN
Signetics Japan, Ltd.
Tokyo
Phone: 813-230-1521
Osaka
Phone: 816-304-6171

KOREA
Philips Industries (Korea) Ltd.
Seoul
Phone: (2) 794-5011

MEXICO
Electronica S.A. de C.V.
Mexico D.F
Phone: (721) 61300

NETHERLANDS
Philips Nederland B.V.
Eindhoven
Phone: 31-40-79-3333

NEW ZEALAND
Philips Electrical Ind. Ltd.
Auckland
Phone: (9) 605914

NORWAY
Norsk A/S Philips
Oslo
Phone: 47-2-680200

PERU
Cadesa
Lima
Phone: (14) 319253

PHILIPPINES
Philips Industrial Dev., Inc.
Makati-Rizal
Phone: (2) 868951

PORTUGAL
Philips Portuguesa SARL
Lisboa
Phone: 351-19-68-3121

SINGAPORE
Philips Project Dev. Pte., Ltd.
Singapore
Phone: 350-2538

SOUTH AFRICA
E.D.A.C. (PTY), Ltd.
Joubert Park
Phone: (11) 401-4600

SPAIN
Miniwatt S.A.
Barcelona
Phone: 301 63 12

SWEDEN
A.B. Elcoma
Stockholm
Phone: 46-08-67-9780

SWITZERLAND
Philips A.G.
Zurich
Phone: 41-01-988-2211

TAIWAN
Philips Taiwan, Ltd.
Taipei
Phone: (2) 712-0500

THAILAND
Philips Electrical Co.
of Thailand Ltd.
Bangkok
Phone: 233-6330-9

TURKEY
Turk Philips
Ticaret A.S.
Istanbul
Phone: 43 59 10

UNITED KINGDOM
Mullard, Ltd.
London
Phone: 44-01-580-6633

UNITED STATES
Signetics International Corp.
Sunnyvale, California
Phone: (408) 739-7700

Printed in U.S.A. Ocotober 1, 1985

TOSHIBA

THE POWER IN MPU'S

MICROPROCESSOR/MICROCOMPUTER

TOSHIBA P/N	DESCRIPTION
MICROCOMPUTERS 8048/8049	
TMP8048P	8-BIT MCU (6 MHz)
TMP8048PI	8-BIT MCU (INDUSTRIAL)
TMP8035P	ROMLESS 8-BIT MCU (6 MHz)
TMP8035PI	ROMLESS 8-BIT MCU (INDUSTRIAL)
TMP8049P	8-BIT MCU (11 MHz)
TMP8049P-6	8-BIT MCU (6 MHz)
TMP8049PI-6	8-BIT MCU (INDUSTRIAL)
TMP8039P	ROMLESS 8-BIT MCU (11 MHz)
TMP8039P-6	ROMLESS 8-BIT MCU (6 MHz)
TMP8039PI-6	ROMLESS 8-BIT MCU (6 MHz)
TMP80C48AP-6	CMOS 8-BIT MCU (6 MHz)
TMP80C48AP	CMOS 8-BIT MCU (11 MHz)
TMP80C35AP-6	CMOS ROMLESS 8-BIT MCU
TMP80C35AP	CMOS ROMLESS 8-BIT MCU
TMP80C49AP-6	CMOS 8-BIT MCU (6 MHz)
TMP80C49AP	CMOS 8-BIT MCU (11 MHz)
TMP80C39AP-6	CMOS ROMLESS 8-BIT MCU
TMP80C39AP	CMOS ROMLESS 8-BIT MCU
TMP80C50AP-6	CMOS 8-BIT MCU (6 MHz)
TMP80C50AP	CMOS 8-BIT MCU (11 MHz)
TMP80C40AP-6	CMOS ROMLESS 8-BIT MCU
TMP80C40AP	CMOS ROMLESS 8-BIT MCU
TMP8243P	I/O EXPANDER
TMP8243PI	IND I/O EXPANDER
TMP82C43P	CMOS I/O EXPANDER
8085 MICROPROCESSOR	
TMP8085AP	8-BIT MPU W/CLOCK (3 MHz)
TMP8085AP-2	8-BIT MPU W/CLOCK (5 MHz)
TMP8155P	256X8 W/IO
TMP8156P	256X8 W/IO (CE)
TMP8355P	2KX8 MROM W I/O
TMP8251AP	PGM COMM I/F
TMP8255AP-5	PGM PERIPH I/F
TMP82C55AP-5	CMOS PGM PERIPH I/F
TMP8259AP	PGM INT CONTR
TMP8279P-5	KEYBOARD/DISPLAY INTF.
TMP8253P-5	PGM INTERVAL TIMER

TOSHIBA P/N	DESCRIPTION
CMOS Z80 MICROPROCESSOR	
TMPZ84C00P*	CMOS Z80A CPU (4 MHz & 6 MHz)
TMPZ84C30P*	CMOS Z80A CTC
TMPZ84C20P*	CMOS Z80A PIO
TMPZ84C10P*	CMOS Z80A DMA
TMPZ84C40P*	CMOS Z80A SIO
TMPZ84C41P*	CMOS Z80A SIO
TMPZ84C42P*	CMOS Z80A SIO
T6497P*	CMOS Z80A CLOCK
4-BIT MICROCOMPUTER	
TMP4720	2KB ROM 2uS NMOS
TMP4740	4KB ROM 2uS NMOS
TMP47C20	2KB ROM 4uS CMOS
TMP47C40	4KS ROM 4uS CMOS
TMP47C21	2KB ROM 4uS CMOS WITH VF DRIVE
TMP47C41	4KB ROM 4uS CMOS WITH VF DRIVE
TMP47C22	2KB ROM 4uS CMOS WITH LCD DRIVE
TMP47C46	4 KB ROM 4uS CMOS WITH MANY I/O
TMP47C200	2KB ROM 2uS CMOS
TMP47C400	4KB ROM 2uS CMOS
TMP47C210	2KB ROM 2uS CMOS WITH VF DRIVE
TMP47C410	4KB ROM 2uS CMOS WITH VF DRIVE
TMP47C220	2KB ROM 2uS CMOS WITH LCD DRIVE
TMP47C420	4KB ROM 2uS CMOS WITH LCD DRIVE
TMP4240	1/2K ROM NMOS, 11 I/O
TMP4250	1/2K ROM NMOS, 23 I/O
TMP4260	1K ROM NMOS, 11 I/O
TMP4270	1K ROM NMOS, 23 I/O
TMP42C40	1/2K ROM CMOS, 11 I/O
TMP42C50	1/2 ROM CMOS, 23 I/O
TMP42C60	1K ROM CMOS, 11 I/O
TMP42C70	1K ROM CMOS, 23 I/O
SPEECH SYNTHESIS	
T6721P	PARCOR SPEECH SYNTHESIS
T6772N	64K BIT PARCOR MROM
T6831P	ADM SPEECH CHIP
T6684N	128K BIT PARCOR MROM
T6803P	PARCOR SPEECH SYNTHESIS

* All CMOS Z80 Family devices also available in Flatpak Packages.

TOSHIBA AMERICA, INC.

2692 DOW AVE., TUSTIN, CALIF. 92680 PHONE: 714-832-6300 TELEX: 314-138

FOR COMPLETE DATA SHEET, Call 800-443-0100, Ext. 518

VTI STANDARD PRODUCT FAMILY

PROCESSORS AND PERIPHERALS

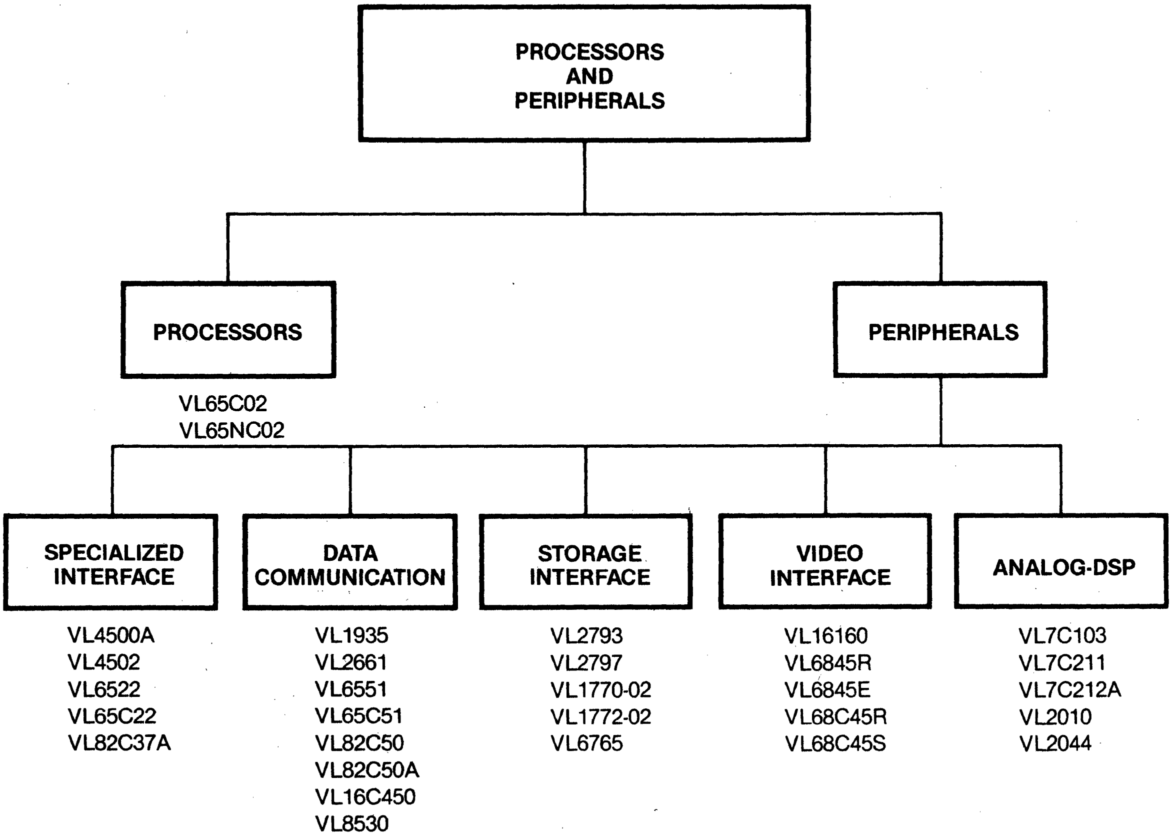
PROCESSORS AND PERIPHERALS
PROCESSORS
VL65C02
VL65NC02
PERIPHERALS
SPECIALIZED INTERFACE
VL4500A
VL4502
VL6522
VL65C22
VL82C37A
DATA COMMUNICATION
VL1935
VL2661
VL6551
VL65C51
VL82C50
VL82C50A
VL16C450
VL8530
STORAGE INTERFACE
VL2793
VL2797
VL1770-02
VL1772-02
VL6765
VIDEO INTERFACE
VL16160
VL6845R
VL6845E
VL68C45R
VL68C45S
ANALOG-DSP
VL7C103
VL7C211
VL7C212A
VL2010
VL2044

VTI STANDARD PRODUCTS

Device	Description
VL4500A	64K DRAM Controller
VL4502	256K CMOS DRAM Controller
VL6522	Parallel Interface/Timer
VL65C22	CMOS Parallel Interface/Timer
VL82C37A	CMOS DMA Controller
VL1935	SDLC/HDLC Datacom Interface
VL2661	EPCI—Serial Interface
VL6551	UART—6500 Compatible
VL65C51	CMOS UART—6500 Bus Compatible
VL82C50	CMOS UART—Intel Bus Compatible
VL82C50A	Improved 8250
VL16C450	Fast Access Time CMOS UART
VL2793	Floppy Disk Interface—Single-sided
VL2797	Floppy Disk Interface—Double-sided
VL8530	Serial Communication Controller

Device	Description
VL1770-02	Floppy Disk Interface—Digital Data Separation
VL1772-02	Floppy Disk Interface—Faster Step Rates
VL2010	Multiplier, TRW Compatible
VL2044	Multiplier, High-speed
VL6765	Floppy Disk Interface—External Data Separation
VL16160	Raster Operations ALU
VL6845R	Industry Standard CRT Controller
VL6845E	Enhanced CRTC—Synertek Compatible
VL68C45R	CMOS Revision R—R1 Compatible
VL68C45S	CMOS Revision S—Hitachi Compatible
VL7C103	300-Baud CMOS Single Chip Modem
VL7C211	1200-Baud CMOS Filter
VL7C212A	1200-Baud CMOS Single Chip Modem
VL65C02	CMOS Enhanced 6502 Processor
VL65NC02	CMOS 65C02 Processor

CROSS REFERENCE CHART

VTI	Function	AD	AMD	AMI	FSC	GTE	HAR	HIT	IDT	INT	LAT	LD	MOT	NSC	NCR	NEC	RCA	RET	RWL	SIG	SMC	SER	TI	TRW	WD	WT	ZIL
65C02	CMOS 6502 uP					X									X				X								
65NC02	CMOS 6502 uP																		X								
4500A	64 K DRAM Ctl																						X				
4502	256 K DRAM Ctl+																						X				
6522	Par Intf / Timer																		X								
65C22	Par Intf / Timer																										
82C37A	DMA Controller		C				X			C																	
1935	SDLC / HDLC Intf																								X		
2661	EPCI Serial Intf												X							X	X						
6551	ACIA Serial Intf			X															X								
65C51	CMOS ACIA			C													X		X								
16C450	Faster 82C50A													C													
82C50	UART Serial Intf													C											C		
82C50A	Improved 8250						X							C													
8530	Serial Com Cont		X							X																	X
2793	FDC Single Side																						X		X		
2797	FDC Double Side																						X		X		
1770-02	FDC std step																								X		
1772-02	FDC fast step																								X		
6765	FDC (IBM PC)									X						X			X		X						X
16160	Raster Op ALU																										
6845E	CRT Cont Rev E																										
6845R	CRT Cont Rev R			X	X			X					X														
68C45R	CMOS CRTC Rev R			C	C			C					C														
68C45S	CMOS CRTC Rev S							C																			
7C103	300 BPS Modem													X								X					
7C211	1200 BPS Filter			X														X				X					
2010	16x16 Mult/Acc	X	C						X		X	X											X	X		X	
2044	16x16 Mult/Acc								X			X														X	

X - Direct replacement for other vendor's part

C - CMOS version but otherwise compatible with existing part

KEY TO VENDOR NAME ABBREVIATIONS

AD - Analog Devices
AMD - Advanced Micro Devices
AMI - American Micro Systems, Inc.
FSC - Fairchild Semiconductor
GTE - GTE Microcircuits
HAR - Harris Semiconductor
HIT - Hitachi America, Ltd.
IDT - Integrated Device Technologies
INT - Intel Corporation
LAT - Lattice Semiconductor
LD - Logic Devices
MOT - Motorola Semiconductor
NSC - National Semiconductor
NCR - NCR Corp Microelectronics
NEC - NEC Electronics, Inc.
RCA - RCA Solid State Division
RET - EG&G Reticon
RWL - Rockwell International
SIG - Signetics Corporation
SMC - Standard Microsystems Corp
SER - Sierra Semiconductor
TI - Texas Instruments
TRW - TRW Semiconductor
WD - Western Digital
WT - Weitek Corporation
ZIL - Zilog, Inc.

VL65C02 • VL65NC02

MICROPROCESSOR CPU FAMILY

FEATURES

- CMOS silicon gate technology
- Low power (4 mA/MHz)
- Software compatible with 6502
- Single +5 V supply ±5%
- Clock speeds up to 4 MHz
- True indexing capability
- Programmable stack pointer
- Interrupt capability
- Non-maskable interrupt
- 8-bit bidirectional data bus
- 64K byte address space
- Internal/external clock oscillator

PIN CONFIGURATION

VL65C02

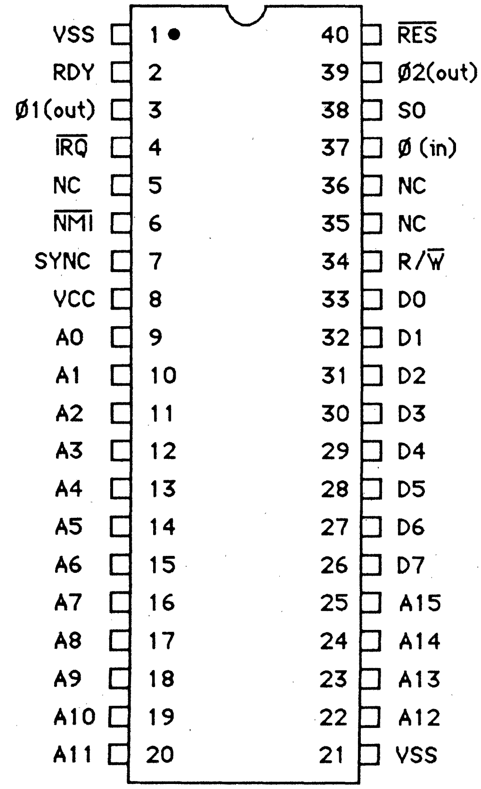
VSS 1 ● 40 $\overline{RES}$
RDY 2 39 Ø2(out)
Ø1(out) 3 38 SO
$\overline{IRQ}$ 4 37 Ø (in)
NC 5 36 NC
$\overline{NMI}$ 6 35 NC
SYNC 7 34 R/$\overline{W}$
VCC 8 33 D0
A0 9 32 D1
A1 10 31 D2
A2 11 30 D3
A3 12 29 D4
A4 13 28 D5
A5 14 27 D6
A6 15 26 D7
A7 16 25 A15
A8 17 24 A14
A9 18 23 A13
A10 19 22 A12
A11 20 21 VSS

DESCRIPTION

The VL65C02 and VL65NC02 are 8-bit microprocessor devices produced with CMOS silicon-gate technology. These devices provide advanced system architecture for enhancements in system performance, speed and value over their NMOS counterparts, the 65XX family of microprocessor devices. Both the VL65C02 and VL65NC02 provide 64K bytes of addressable memory and an interrupt input, as well as options for on-chip oscillators and drivers.

The processor features an 8-bit ALU, with a 16-bit address bus. Instructions include decimal as well as binary arithmetic and true indexed addressing modes are available on many. Performance is enhanced through the use of a pipelined architecture. The processor is compatible with DMA devices and has a READY input to synchronize bus accesses for slow memory devices. Both maskable and non-maskable interrupt inputs are provided for fast response to external system requirements.

ORDER INFORMATION

CLK	Plastic	Ceramic
1 MHz	VL65NC02-01PC	VL65NC02-01CC
	VL65C02 -01PC	VL65C02 -01CC
2 MHz	VL65NC02-02PC	VL65NC02-02CC
	VL65C02 -02PC	VL65C02 -02CC
3 MHz	VL65NC02-03PC	VL65NC02-03CC
	VL65C02 -03PC	VL65C02 -03CC
4 MHz	VL65NC02-04PC	VL65NC02-04CC
	VL65C04 -04PC	VL65C02 -04CC

VL4500A

64K DYNAMIC RAM CONTROLLER

FEATURES

- Controls 64K DRAMs in a single chip
- Creates Static RAM appearance
- Contains all mux, refresh and timing control logic
- Directly addresses up to 32 chips
- Operates from microprocessor clock
- Requires no xtals, delay lines or RCs
- Supports internal/external refresh
- Supports various refresh modes:
  - Distributed
  - Burst
  - Cycle Steal

PIN CONFIGURATION

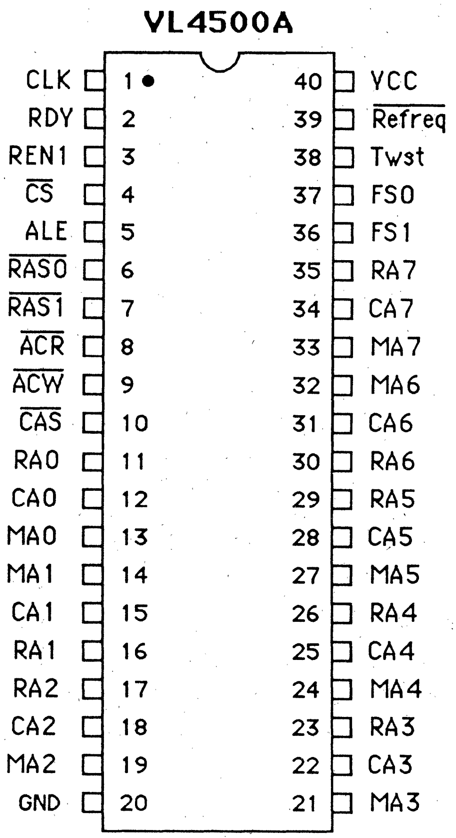
VL4500A
CLK 1
RDY 2
REN1 3
$\overline{CS}$ 4
ALE 5
$\overline{RAS0}$ 6
$\overline{RAS1}$ 7
$\overline{ACR}$ 8
$\overline{ACW}$ 9
$\overline{CAS}$ 10
RA0 11
CA0 12
MA0 13
MA1 14
CA1 15
RA1 16
RA2 17
CA2 18
MA2 19
GND 20
40 VCC
39 $\overline{Refreq}$
38 Twst
37 FS0
36 FS1
35 RA7
34 CA7
33 MA7
32 MA6
31 CA6
30 RA6
29 RA5
28 CA5
27 MA5
26 RA4
25 CA4
24 MA4
23 RA3
22 CA3
21 MA3

DESCRIPTION

The VL4500A is a monolithic DRAM system controller designed to do address multiplexing, timing and refresh/access arbitration functions to simplify the interface of DRAMs to microprocessor systems.
The controller has a 16-bit multiplexer that generates the address lines for the memory device from the 16 system address bits and provides the strobes required by the memory to decode the address.
8-bit counter generates 256 row addresses required to refresh the memories.

A refresh timer is provided that generates the necessary timing to refresh dynamic memories and assure data retention. The VL4500A also contains refresh/access arbitration circuitry to resolve conflicts between memory access cycles and refresh cycles. The device is directly compatible with the TI TMS4500A and is available with access times ranging from 150 to 250 ns. The VL4500A is offered in 40-pin 600 mil dual in-line plastic package and operates over the 0° to 70° C temperature range.

ORDER INFORMATION

Speed	Plastic	Ceramic
150 ns	VL4500A-15PC	VL4500A-15CC
200 ns	VL4500A-20PC	VL4500A-20CC
250 ns	VL4500A-25PC	VL4500A-25CC

VL4502

256K CMOS DYNAMIC RAM CONTROLLER

FEATURES

- Controls 64K or 256K DRAMs in CMOS
- Creates Static RAM appearance
- Contains all mux, refresh and timing control logic
- Directly addresses up to 64 chips
- Operates from microprocessor clock
- Requires no xtals, delay lines or RCs
- Supports internal/external refresh

PIN CONFIGURATION

VL4502

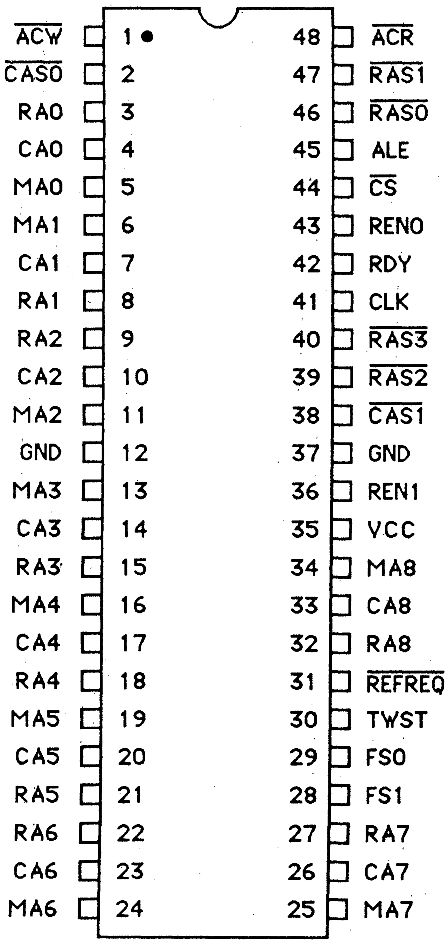
$\overline{ACW}$ 1 48 $\overline{ACR}$
$\overline{CAS0}$ 2 47 $\overline{RAS1}$
RA0 3 46 $\overline{RAS0}$
CA0 4 45 ALE
MA0 5 44 $\overline{CS}$
MA1 6 43 REN0
CA1 7 42 RDY
RA1 8 41 CLK
RA2 9 40 $\overline{RAS3}$
CA2 10 39 $\overline{RAS2}$
MA2 11 38 $\overline{CAS1}$
GND 12 37 GND
MA3 13 36 REN1
CA3 14 35 VCC
RA3 15 34 MA8
MA4 16 33 CA8
CA4 17 32 RA8
RA4 18 31 $\overline{REFREQ}$
MA5 19 30 TWST
CA5 20 29 FS0
RA5 21 28 FS1
RA6 22 27 RA7
CA6 23 26 CA7
MA6 24 25 MA7

DESCRIPTION

The VL4502 is a CMOS monolithic DRAM controller designed to provide address multiplexing, timing and refresh/access arbitration functions to simplify the interface of DRAM to microprocessor systems.

The controller contains a 16-bit multiplexer that generates the address lines for the memory device from the 16 system address bits and provides the strobe signals required by the memory to decode the address. An 8-bit refresh counter generates the 256 row addresses required to refresh the memories.

A refresh timer generates the timing necessary to refresh the dynamic memories and assure data retention. The VL4502 also contains refresh/access arbitration circuitry to resolve conflicts between memory access cycles and refresh cycles. The device is directly compatible with the TI THCT4502, and is available with access times ranging from 150 to 250 ns. The VL4502 is offered in a 48-pin 600 mil dual in-line plastic package and operates over the 0° to 70° C temperature range.

ORDER INFORMATION

Speed	Plastic	Ceramic
150 ns	VL4502-15PC	VL4502-15CC
200 ns	VL4502-20PC	VL4502-20CC
250 ns	VL4502-25PC	VL4502-25CC

VL279X

FLOPPY DISK FORMATTER / CONTROLLER FAMILY

FEATURES

- On-chip PLL data/clock separator
- On-chip write precompensation
- Single +5 V supply
- Accommodates single/double density formats:
  - IBM 3740 (FM)
  - IBM 34 (MFM)
- Automatic seek with verify
- Multiple sector read/write
- Programmable control:
  - Track-to-track step rates
  - Head-load timing

PIN CONFIGURATION

VL2797

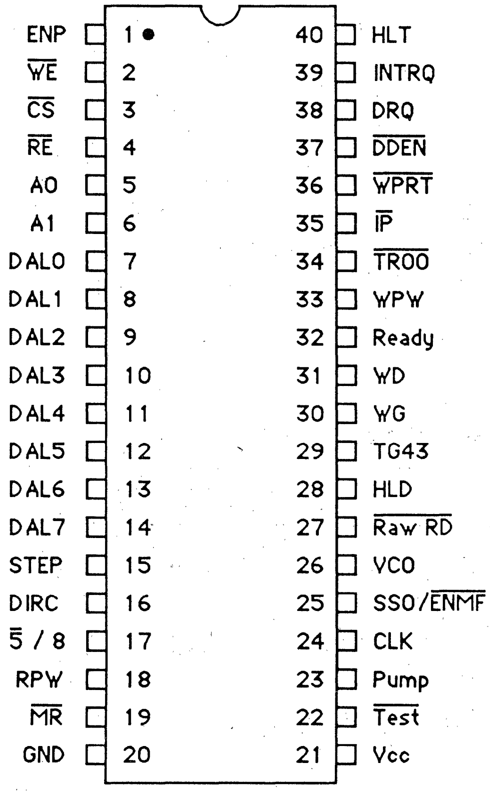
ENP 1
$\overline{WE}$ 2
$\overline{CS}$ 3
$\overline{RE}$ 4
A0 5
A1 6
DAL0 7
DAL1 8
DAL2 9
DAL3 10
DAL4 11
DAL5 12
DAL6 13
DAL7 14
STEP 15
DIRC 16
$\overline{5}$ / 8 17
RPW 18
$\overline{MR}$ 19
GND 20
40 HLT
39 INTRQ
38 DRQ
37 $\overline{DDEN}$
36 $\overline{WPRT}$
35 $\overline{IP}$
34 $\overline{TR00}$
33 WPW
32 Ready
31 WD
30 WG
29 TG43
28 HLD
27 $\overline{Raw\ RD}$
26 VCO
25 SSO/$\overline{ENMF}$
24 CLK
23 Pump
22 $\overline{Test}$
21 Vcc

DESCRIPTION

The VL2793 and VL2797 are NMOS controllers that perform functions of floppy disk formatting and control in a single chip implementation. The VL279X is IBM 3740 compatible in single density mode (FM), and IBM System 34 compatible in the double density mode (MFM). The VL279X contains the features of the WD179X, plus a high performance PLL data/clock separator and a write precompensation logic. Write precompensation is automatically engaged to a value programmed via an external potentiometer. The VL279X has been made as close as possible to the WD1771, WD179X to maintain software compatibility.

The processor interface consists of an 8-bit bidirectional data bus for data, status and control transfers. The VL2793 is exactly compatible with the VL2797 except that the data lines (DAL0 - DAL7) are active HIGH on the VL2793 and active LOW on the VL2797. All outputs will drive one TTL load, or three LS loads. The VL2797 has a side select output for controlling double sided disk drives.

ORDER INFORMATION

Data	Plastic	Ceramic
Active **HIGH**	VL2793-PC	VL2793-CC
Active **LOW**	VL2797-PC	VL2797-CC

VL1935

SYNCHRONOUS DATA LINK CONTROLLER

FEATURES

- Synchronous serial interface circuit
- Supports the following protocols:
  - SDLC
  - HDLC
  - ADCCP
  - CCITT X.25
- Operates up to 2 Mbps
- Internal digital data/clock separator
- Double buffered data paths
- Complete modem control handshakes
- Automatic zero insertion/deletion
- Maintenance mode for self-test
- 40-pin package

PIN CONFIGURATION

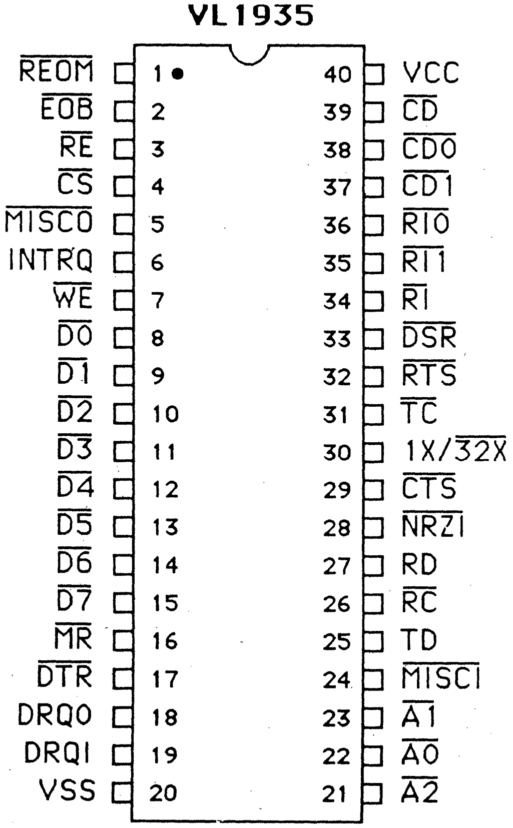
VL1935
REOM 1
EOB 2
RE 3
CS 4
MISCO 5
INTRQ 6
WE 7
D0 8
D1 9
D2 10
D3 11
D4 12
D5 13
D6 14
D7 15
MR 16
DTR 17
DRQ0 18
DRQI 19
VSS 20
40 VCC
39 CD
38 CD0
37 CD1
36 RI0
35 RI1
34 RI
33 DSR
32 RTS
31 TC
30 1X/32X
29 CTS
28 NRZI
27 RD
26 RC
25 TD
24 MISCI
23 A1
22 A0
21 A2

DESCRIPTION

The VL1935 is an HMOS microcomputer data communications controller which interfaces a parallel system to a synchronous serial data communication channel using ISO HDLC, IBM's SDLC or ANSI ADCCP protocol. The circuit is TTL compatible on all inputs and outputs. The design of the circuit requires minimal software support from the host CPU, while offering support for all of the low-level tasks needed to support synchronous protocols.

The receiver and transmitter logic operate as two totally independent sections with a minimum amount of common logic. Frames are automatically checked for errors during reception by verifying correct frame check sequence information. In the transmit mode the FCS is automatically generated by the controller and sent before the final closing flag. In the receive mode, the controller calculates the value for the FCS based on the incoming data stream and compares this with the FCS received. Any difference in these FCSs is reported to the host processor as an error.

ORDER INFORMATION

Bit Rate	Plastic	Ceramic
0.5 MHz	VL1935-10PC	VL1935-10CC
1.0 MHz	VL1935-11PC	VL1935-11CC
1.5 MHz	VL1935-12PC	VL1935-12CC
2.0 MHz	VL1935-13PC	VL1935-13CC

VL16160

RASTER OP GRAPHICS / BOOLEAN OPERATION ALU

FEATURES

- Provides hardware assist for raster operations
- Includes 32-bit barrel shifter
- Performance increase:
  Monochrome - 4 X
  Color - 4 X (Planes)
- Supports printers and CRT terminals
- Compatible with color as well as monochrome
- Implements all 256 possible raster operations
- Performs source/destination alignment on a pixel basis
- TTL Compatible
- Single +5 V supply ±5%
- 28 pin package

PIN CONFIGURATION

VL16160

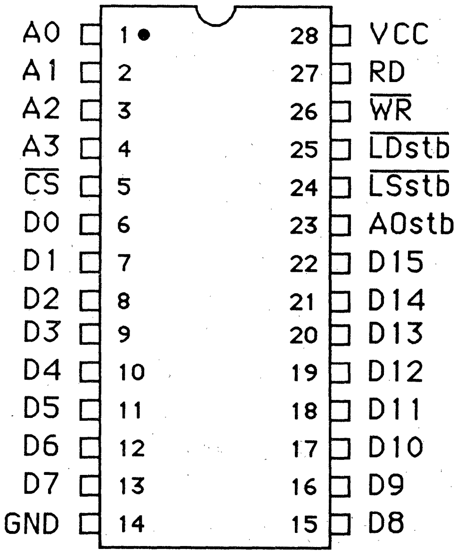
A0 1
A1 2
A2 3
A3 4
$\overline{CS}$ 5
D0 6
D1 7
D2 8
D3 9
D4 10
D5 11
D6 12
D7 13
GND 14
28 VCC
27 RD
26 $\overline{WR}$
25 $\overline{LDstb}$
24 $\overline{LSstb}$
23 A0stb
22 D15
21 D14
20 D13
19 D12
18 D11
17 D10
16 D9
15 D8

DESCRIPTION

The VL16160 Raster Op ALU (RALU) provides hardware assisted performance enhancement for bit manipulation operations used in bit mapped graphics displays. These bit block translation operations (BITBLT) allow bit mapped images to be combined by logical operators. The operations include AND, OR, XOR and can be used on source, destination, and pattern data. Support for masking with multiple mask registers for clipping is also included.

BITBLT is general purpose and can be used in a wide range of graphics operations including text display using arbitrary fonts, attributes and enhancements. Successive applications of BITBLTs can perform scaling, filling, rotating, and texturing. These operations are not limited to CRT devices since the manipulations take place in a screen buffer RAM. The RALU is a natural solution for laser printer applications. The RALU is available with a 120 ns access time.

ORDER INFORMATION

Speed	Plastic	Ceramic
120 ns	VL16160-12PC	VL16160-12CC

VL6845R/E • VL68C45R/S

CRT CONTROLLER FAMILY

FEATURES

- CRT Controller Family includes:
  Rev E compatibility with SY6845E
  Rev R compatibility with MC6845R
  CMOS Rev R1 compatible with MC6845R1
  CMOS Rev S compatible with HD6845S
- Widely used in PC Video displays
- 50 / 60 HZ compatible
- Single +5V Supply ±5%
- Internal refresh address generation
- Character clocks up to 5 MHz
- Bus clocks up to 3 MHz

PIN CONFIGURATION

VL6845

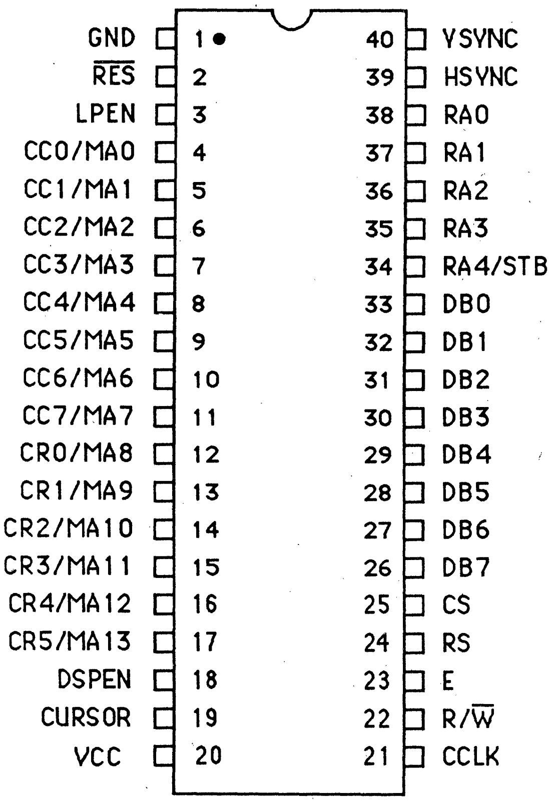
GND 1 40 VSYNC
$\overline{RES}$ 2 39 HSYNC
LPEN 3 38 RA0
CC0/MA0 4 37 RA1
CC1/MA1 5 36 RA2
CC2/MA2 6 35 RA3
CC3/MA3 7 34 RA4/STB
CC4/MA4 8 33 DB0
CC5/MA5 9 32 DB1
CC6/MA6 10 31 DB2
CC7/MA7 11 30 DB3
CR0/MA8 12 29 DB4
CR1/MA9 13 28 DB5
CR2/MA10 14 27 DB6
CR3/MA11 15 26 DB7
CR4/MA12 16 25 CS
CR5/MA13 17 24 RS
DSPEN 18 23 E
CURSOR 19 22 R/$\overline{W}$
VCC 20 21 CCLK

DESCRIPTION

The VL6845X and VL68C45X are a family of CRT controllers that are widely used in bit mapped and character mapped applications for both terminals and personal computers. The VL6845 family is compatible with Motorola's family of HMOS controllers, while the VL68C45 family allows designs to consume less power through the use of CMOS technology. In addition to compatibility with both the Motorola and Hitachi families, the VL68C45R contains enhancements found in the MC6845R1. These enhancements allow for higher resolution of displays without extra external hardware.

The VL6845 family is available in a range of bus and character clock rates, with bus clocks up to 3 MHz and character clocks up to 5 MHz. These CRT controllers are pin and functionally compatible with their counterparts offered by other vendors.

ORDER INFORMATION

Rev	Data Bus	Char Clk	Plastic	Ceramic
E	1	3	VL6845E-13PC	VL6845E-13CC
	2	3	VL6845E-23PC	VL6845E-23CC
	3	3	VL6845E-33PC	VL6845E-33CC
R	2	3	VL6845R-23PC	VL6845R-23CC
	2	4	VL6845R-24PC	VL6845R-24CC
	3	3	VL6845R-33PC	VL6845R-33CC
	3	4	VL6845R-34PC	VL6845R-34CC
	3	5	VL6845R-35PC	VL6845R-35CC
CR	3	3	VL68C45R-33PC	VL68C45R-33CC
	3	4	VL68C45R-34PC	VL68C45R-34CC
CS	3	3	VL68C45S-33PC	VL68C45S-33CC
	3	4	VL68C45S-34PC	VL68C45S-34CC

VL6765

FLOPPY DISK FORMATTER

FEATURES

- Directly replaces µPD765A and i8272
- Single phase 4 or 8 MHz clock
- Compatible with double and single density formats:
  - IBM 3740 (FM)
  - IBM 34 (MFM)
- Sector lengths up to 8192 bytes
- Data transfers in optional DMA mode
- Programmable control:
  - Track-to-track step rates
  - Head-load timing
- Single +5 V supply ±5%

PIN CONFIGURATION

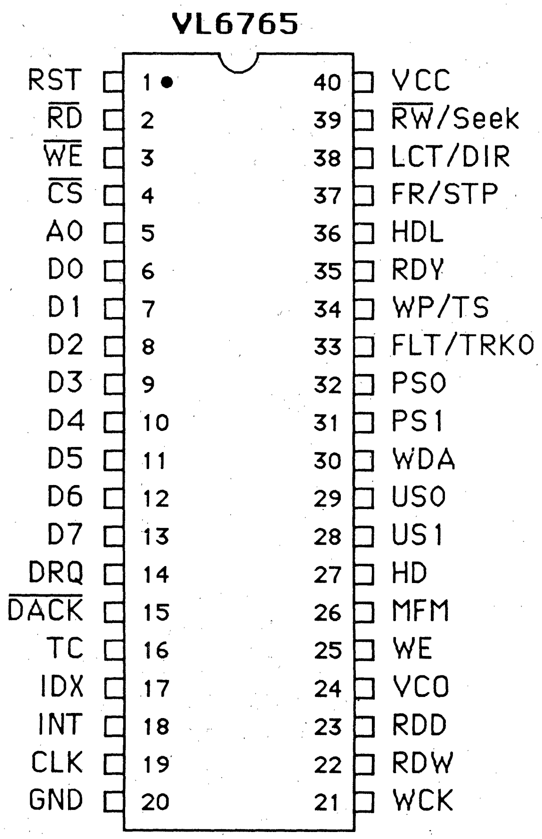
VL6765
RST 1
$\overline{\text{RD}}$ 2
$\overline{\text{WE}}$ 3
$\overline{\text{CS}}$ 4
A0 5
D0 6
D1 7
D2 8
D3 9
D4 10
D5 11
D6 12
D7 13
DRQ 14
$\overline{\text{DACK}}$ 15
TC 16
IDX 17
INT 18
CLK 19
GND 20
40 VCC
39 $\overline{\text{RW}}$/Seek
38 LCT/DIR
37 FR/STP
36 HDL
35 RDY
34 WP/TS
33 FLT/TRK0
32 PS0
31 PS1
30 WDA
29 US0
28 US1
27 HD
26 MFM
25 WE
24 VCO
23 RDD
22 RDW
21 WCK

DESCRIPTION

The VL6765 Double Density Floppy Disk Controller (DDFDC) interfaces up to four floppies to an 8-bit or 16-bit microprocessor based systems including i8088, and MC68000. The DDFDC simplifies system design by minimizing the number of external hardware components and software steps needed to implement the floppy disk drive interface. Control signals provided by the DDFDC reduce the number of components required in the external phase locked loop and write precompensation circuitry. The DDFDC supports both IBM 3740 single-density (FM) and IBM system 34 double-density (MFM) formats.

The DDFDC directly interfaces to the synchronous microprocessor bus and operates with 8-bit data transferred on the bus in either DMA or non-DMA mode. In DMA mode the CPU loads the command into the DDFDC and all data transfers occur under DMA control. The VL6765 is directly compatible with the µPD8257 direct memory access control device. In the non-DMA mode, the DDFDC generates an interrupt to the CPU indicating that a byte of data is available.

ORDER INFORMATION

Clk	Plastic	Ceramic
4 MHz	VL6765-04PC	VL6765-04CC
8 MHz	VL6765-08PC	VL6765-08CC

VL2661

ENHANCED PROGRAMMABLE COMMUNICATIONS INTERFACE

FEATURES

- Asynchronous/synchronous operation
- 5- to 8- bit character lengths
- Bisync support includes:
  - Internal character synchronization
  - Transparent or non-transparent mode
  - Odd, even or no parity
  - Automatic SYN or DLE-SYN stripping
  - Up to 1 Mbps operation
- Asynchronous support includes:
  - 1, 1.5 or 2 stop bits transmitted
  - Odd, even or no parity
  - Overrun, parity and framing error detection
- Up to 38.4 Kbps (x64 clock)
- TTL compatible
- Single +5 V supply ±5%
- 28-pin package

PIN CONFIGURATION

VL2661

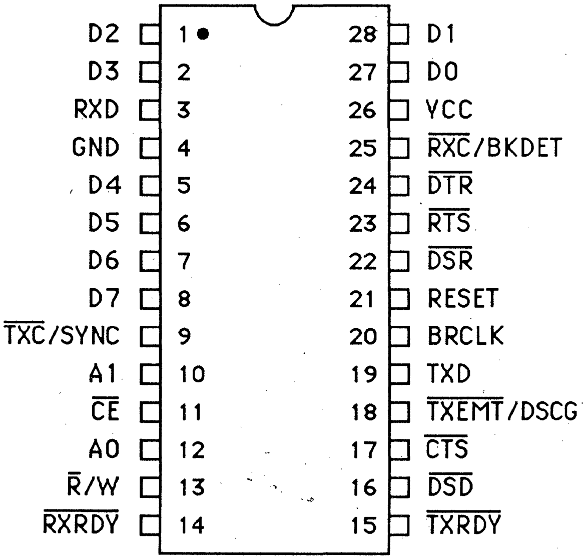
D2
1
D3
2
RXD
3
GND
4
D4
5
D5
6
D6
7
D7
8
$\overline{TXC}$/SYNC
9
A1
10
$\overline{CE}$
11
A0
12
$\overline{R}$/W
13
$\overline{RXRDY}$
14
28
D1
27
D0
26
VCC
25
$\overline{RXC}$/BKDET
24
$\overline{DTR}$
23
$\overline{RTS}$
22
$\overline{DSR}$
21
RESET
20
BRCLK
19
TXD
18
$\overline{TXEMT}$/DSCG
17
$\overline{CTS}$
16
$\overline{DSD}$
15
$\overline{TXRDY}$

DESCRIPTION

The VL2661 is an asynchronous/synchronous serial interface designed to support low cost applications requiring a wide range of serial protocol support. The EPCI features double buffered data paths in the transmitter and the receiver for easier use in real time systems. No system clock is required since the EPCI contains an internal baud-rate generator capable of generating bit rates up to 38.4 Kbps in the X64 divide mode. Higher bit rates are possible by programming the clock divisor to X16 or X1 (up to 1 Mbps).

For reliable systems application, the EPCI contains built in loop-back test hardware so that data paths may be verified without added hardware complexity. Three versions of the EPCI are available to operate with different crystal frequencies giving various bit rates with minimum frequency errors. All inputs and outputs are TTL compatible, and the RXC and TXC pins are short circuit protected. The EPCI is available in a 28-pin dual in-line package.

ORDER INFORMATION

Bit Rate	Plastic	Ceramic
01	VL2661-01PC	VL2661-01CC
02	VL2661-02PC	VL2661-02CC
03	VL2661-03PC	VL2661-03CC

VL6522 • VL65C22

PARALLEL INTERFACE / TIMER

FEATURES

- CMOS/NMOS Parallel Interface/Timer
- Fully compatible with NMOS 6522
- CMOS version for low power operation for battery powered systems
- Two 8-bit bidirectional I/O ports
- Two 16-bit Timer/Counters
- Serial bidirectional I/O port
- Enhanced handshake features
- Programmable Data Direction Registers
- TTL compatible I/O peripheral lines
- Available in 40 pin DIP package

PIN CONFIGURATION

VL6522/VL65C22

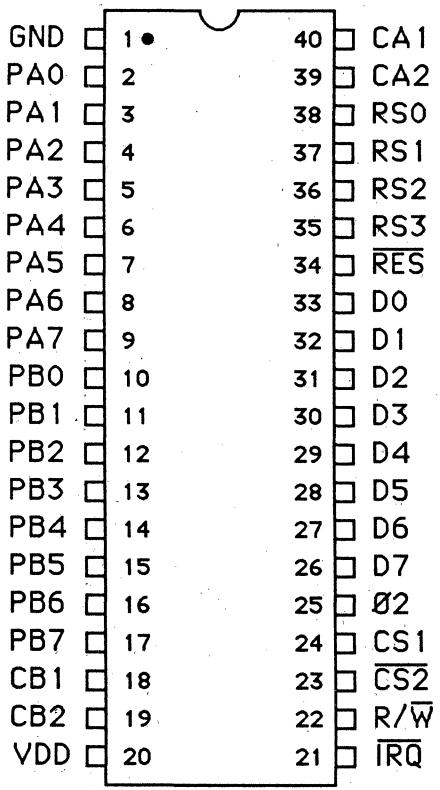
GND 1
PA0 2
PA1 3
PA2 4
PA3 5
PA4 6
PA5 7
PA6 8
PA7 9
PB0 10
PB1 11
PB2 12
PB3 13
PB4 14
PB5 15
PB6 16
PB7 17
CB1 18
CB2 19
VDD 20
40 CA1
39 CA2
38 RS0
37 RS1
36 RS2
35 RS3
34 $\overline{\text{RES}}$
33 D0
32 D1
31 D2
30 D3
29 D4
28 D5
27 D6
26 D7
25 Ø2
24 CS1
23 $\overline{\text{CS2}}$
22 R/$\overline{\text{W}}$
21 $\overline{\text{IRQ}}$

DESCRIPTION

The VL6522/VL65C22 is a pair of flexible I/O devices for use with the 65XX family of processors. The VL65C22 is a CMOS implementation of the VL6522 device. The VL65C22 includes functions for programmed control of up to two peripheral devices (ports A and B). Two program controlled 8-bit bidirectional peripheral I/O ports allow direct interfacing between the microprocessor and selected peripheral devices. Two programmable Data Direction Registers (A and B) allow selection of data direction (input vs output) on an individual line by line basis. Also provided are two programmable 16-bit counter/timers with latches. Timer 1 can be operated in a one-shot interrupt mode with interrupts on each count-to-zero or in a free running mode with a series of evenly spaced interrupts. Timer 2 functions as both an interval and pulse counter. Serial data transfers are provided by a shift register. Application versatility is futher increased by various control registers, including an interrupt flag register, an interrupt enable register and two function control registers.

ORDER INFORMATION

Version	Plastic	Ceramic
HMOS	VL6522-PC	VL6522-CC
CMOS	VL65C22-PC	VL65C22-CC

FOR COMPLETE DATA SHEET, Call 800-443-0100, Ext. 518

VL82C50/A • VL16C450

ASYNCHRONOUS COMMUNICATIONS ELEMENTS

FEATURES

- CMOS asynchronous communication interface family compatible with:
  - 82C50 - National, Western Digital
  - 82C50A - National, Harris
  - 16C450 - National, Harris
- Easily interfaces with popular micros
- Fully double buffered design
- Complete set of modem handshakes
- Programmable baud rate generator
- Internal diagnostic capabilities
- Prioritized interrupt system
- 3-state TTL compatible bus interface

PIN CONFIGURATION

VL16C450

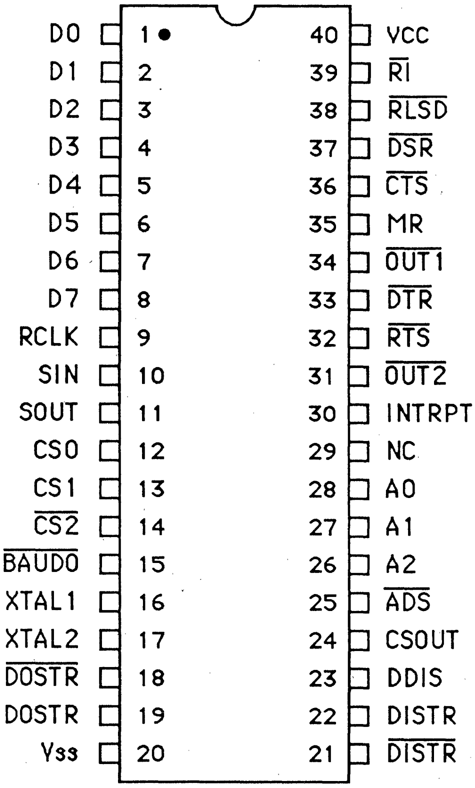

D0 1
D1 2
D2 3
D3 4
D4 5
D5 6
D6 7
D7 8
RCLK 9
SIN 10
SOUT 11
CS0 12
CS1 13
$\overline{CS2}$ 14
$\overline{BAUDO}$ 15
XTAL1 16
XTAL2 17
$\overline{DOSTR}$ 18
DOSTR 19
Vss 20
40 VCC
39 $\overline{RI}$
38 $\overline{RLSD}$
37 $\overline{DSR}$
36 $\overline{CTS}$
35 MR
34 $\overline{OUT1}$
33 $\overline{DTR}$
32 $\overline{RTS}$
31 $\overline{OUT2}$
30 INTRPT
29 NC
28 A0
27 A1
26 A2
25 $\overline{ADS}$
24 CSOUT
23 DDIS
22 DISTR
21 $\overline{DISTR}$

DESCRIPTION

The VL16C450 is an improved version of the VL82C50A asynchronous communications element (ACE). The changes in specifications allow the VL16C450 to be bus compatible with current microprocessors requiring very fast access times.

The VL16C450, VL82C50A and VL82C50 each function as a serial data input/output interface for microprocessor based systems. The functionality of the ACE is programmed by system software via a 3-state 8-bit bi-directional data bus. The ACE performs serial to parallel conversion of data characters sent from a modem or other communications device. It provides parallel to serial conversion of data received from the host CPU.

The ACE includes a programmable baud rate generator that is capable of making all standard baud rates by dividing a timing reference clock by a divisor ranging from 1 to $2^{(16)}-1$. Also included in the ACE is a complete set of MODEM controls that can generate interrupts or be polled.

Order Information

Version	Plastic	Ceramic
82C50	VL82C50-PC	VL82C50-CC
82C50A	VL82C50A-PC	VL82C50A-CC
16C450	VL16C450-PC	VL16C450-CC

VL6551 • VL65C51

ASYNCHRONOUS COMMUNICATIONS INTERFACE ADAPTOR

FEATURES

- CMOS implementation for low power
- 5- to 8- bit character lengths
- Asynchronous support includes:
  - 1, 1.5 or 2 stop bits
  - Odd, even or no parity
  - Overrun, parity and framing error detection
- External 16 x clock input for non-standard baud rates up to 125 Kbps
- Includes modem control handshakes
- Serial echo mode
- False-start bit detection
- Programmable interrupt control
- Up to 38.4 kbps (x 64 clock mode)
- TTL Compatible
- Single +5 V supply ±5%
- 28-pin package

PIN CONFIGURATION

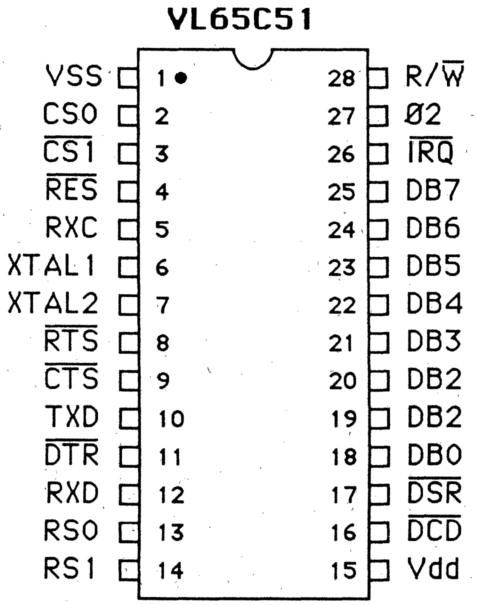
VL65C51
VSS 1
CS0 2
$\overline{\text{CS1}}$ 3
$\overline{\text{RES}}$ 4
RXC 5
XTAL1 6
XTAL2 7
$\overline{\text{RTS}}$ 8
$\overline{\text{CTS}}$ 9
TXD 10
$\overline{\text{DTR}}$ 11
RXD 12
RS0 13
RS1 14
28 R/$\overline{\text{W}}$
27 φ2
26 $\overline{\text{IRQ}}$
25 DB7
24 DB6
23 DB5
22 DB4
21 DB3
20 DB2
19 DB2
18 DB0
17 $\overline{\text{DSR}}$
16 $\overline{\text{DCD}}$
15 Vdd

DESCRIPTION

The VL6551 and VL65C51 are a family of data communications devices which support the 6500 series processor applications. These parts are available in HMOS and low power CMOS technology. The VL65C51 offers many versatile features for interfacing processors to serial communication devices and data sets. The VL65C51 includes an internal baud rate generator that can be programmed to provide baud rates from 50 bps to 19.2 Kbps. The baud rate generator uses a commonly available 1.8432 MHz external crystal. For non-standard bit rates, the VL65C51 can use an external oscillator to provide bit rates up to 125 Kbps in the 16 x input mode. In addition to the many features offered by the VL65C51 architecture, the part offers all of the advantages of CMOS technology such as high speed operation, increased noise immunity, higher reliability, and greatly reduced power consumption. The part is offered in a 28-pin dual in-line package.

ORDER INFORMATION

Version	Plastic	Ceramic
HMOS	VL6551-PC	VL6551-CC
CMOS	VL65C51-PC	VL65C51-CC

VL8530

SERIAL COMMUNICATIONS CONTROLLER

FEATURES

- Two independent full duplex channels
- 0 to 1.5M bit/second
- Multiprotocol operation; for NRZ, NRZI, or FM
- Asynchronous mode includes:
  - 1, 1.5, or 2 bits per character
  - Programmable clock factor
  - Break generation and error detect
- Intelligent SDLC/HDLC
- Local Loopback and Auto Echo modes
- 1.544M bit/second T1 digital trunk version available (VL8530-07)
- Synchronous support includes:
  - Internal or external character synchronization

PIN CONFIGURATION

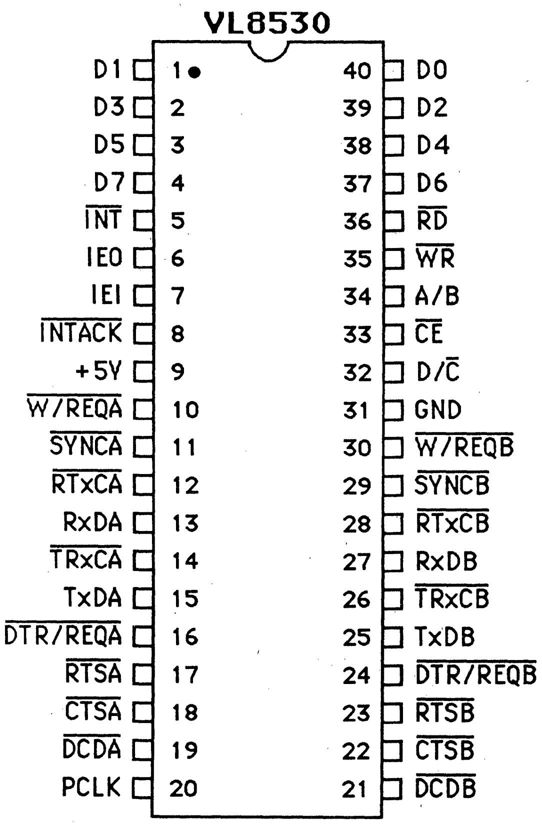
VL8530
D1 1
D3 2
D5 3
D7 4
$\overline{\text{INT}}$ 5
IEO 6
IEI 7
$\overline{\text{INTACK}}$ 8
+5V 9
$\overline{\text{W/REQA}}$ 10
$\overline{\text{SYNCA}}$ 11
$\overline{\text{RTxCA}}$ 12
RxDA 13
$\overline{\text{TRxCA}}$ 14
TxDA 15
$\overline{\text{DTR/REQA}}$ 16
$\overline{\text{RTSA}}$ 17
$\overline{\text{CTSA}}$ 18
$\overline{\text{DCDA}}$ 19
PCLK 20
40 D0
39 D2
38 D4
37 D6
36 $\overline{\text{RD}}$
35 $\overline{\text{WR}}$
34 A/B
33 $\overline{\text{CE}}$
32 D/$\overline{\text{C}}$
31 GND
30 $\overline{\text{W/REQB}}$
29 $\overline{\text{SYNCB}}$
28 $\overline{\text{RTxCB}}$
27 RxDB
26 $\overline{\text{TRxCB}}$
25 TxDB
24 $\overline{\text{DTR/REQB}}$
23 $\overline{\text{RTSB}}$
22 $\overline{\text{CTSB}}$
21 $\overline{\text{DCDB}}$

DESCRIPTION

The VL8530 SCC Serial Communications Controller is a dual-channel, multi-protocol data communications peripheral designed for use with conventional non-multiplexed buses. The SCC functions as a serial-to-parallel, parallel-to-serial converter/controller. The SCC can be software-configured to satisfy a wide variety of serial communications applications. The device contains a variety of new, sophisticated internal functions including on-chip baud rate generators, Digital Phase-Locked Loops, and crystal oscillators that dramatically reduce the need for external logic.

The SCC handles asynchronous formats, Synchronous byte-oriented protocols such as IBM Bisync, and Synchronous bit-oriented protocols such as HDLC and IBM SDLC. This versatile device supports virtually any serial data transfer application (cassette, diskette, tape drives, etc.).

The device can generate and check CRC codes in any Synchronous mode and can be programmed to check data integrity in various modes. The SCC also has facilities for modem controls in both channels.

ORDER INFORMATION

CLK	Plastic	Ceramic
4MHz	VL8530-4PC	VL8530-4CC
6MHz	VL8530-6PC	VL8530-6CC
6.5MHz	VL8530-7PC	VL8530-7CC

VL177X

FLOPPY DISK CONTROLLER FAMILY

FEATURES

- Low cost, easy to implement floppy disk controller family
- Enhanced digital data/clock separator
- Supports multiple formats:
  IBM 3740 single-density (FM)
  IBM system 34 double-density (MFM)
- Built-in write precompensation logic
- Programmable sector lengths:
  128, 256, 512, or 1024 bytes/sector
- 8-bit bidirectional data bus
- Single +5 V supply ±5%
- Motor control logic included
- Two versions available:
  VL1770-02 - 1793 step rates
  VL1772-02 - Faster step rates

PIN CONFIGURATION

VL177X

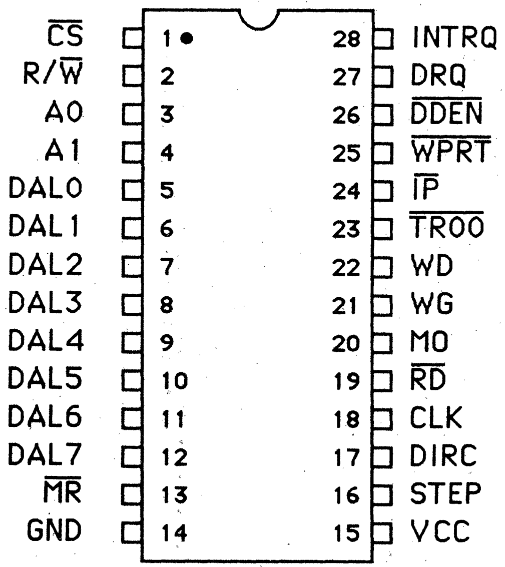
$\overline{\text{CS}}$ 1
R/$\overline{\text{W}}$ 2
A0 3
A1 4
DAL0 5
DAL1 6
DAL2 7
DAL3 8
DAL4 9
DAL5 10
DAL6 11
DAL7 12
$\overline{\text{MR}}$ 13
GND 14
28 INTRQ
27 DRQ
26 $\overline{\text{DDEN}}$
25 $\overline{\text{WPRT}}$
24 $\overline{\text{IP}}$
23 $\overline{\text{TR00}}$
22 WD
21 WG
20 MO
19 $\overline{\text{RD}}$
18 CLK
17 DIRC
16 STEP
15 VCC

DESCRIPTION

The VL177X family of floppy disk controllers function as controller/formatters for 5 1/4 inch floppy drives. This family has two members offering either standard 1793 head step rates (1770) or faster step rates (1772). These parts are all similar to their predecessor, the 1793, but also contain a digital data/clock separator and write precompensation logic. The drive side of the FDC needs no additional logic except for buffers and receivers. Hardware support is minimized by including a motor-on signal on the 1770. This does away with the need for an extra bit of I/O control.

The device has been designed for the control of 5 1/4 inch floppy disk drives with data rates of 125 Kbps (using single density) or 250 Kbps (double density). In addition, write precompensation of 125 ns from nominal can be enabled at any point through simple software commands. The processor bus interface is an 8-bit bidirectional port that can drive one TTL or three LS loads.

ORDER INFORMATION

Version	Plastic	Ceramic
1770-02	VL1770-02PC	VL1770-02CC
1772-02	VL1772-02PC	VL1772-02CC

VL82C37A ADVANCE INFORMATION

CMOS PROGRAMMABLE DMA CONTROLLER

FEATURES

- Enable/disable control for individual DMA requests
- Four independent DMA channels
- Auto-initialization of all channels
- Memory-to-memory block transfers
- Memory block initialization
- Address increment or decrement
- Up to 1.6M bytes/second transfer
- Directly expandable for more channels
- End of process input for termination
- Software DMA requests
- Programmable DREQ and DACK signals

PIN CONFIGURATION

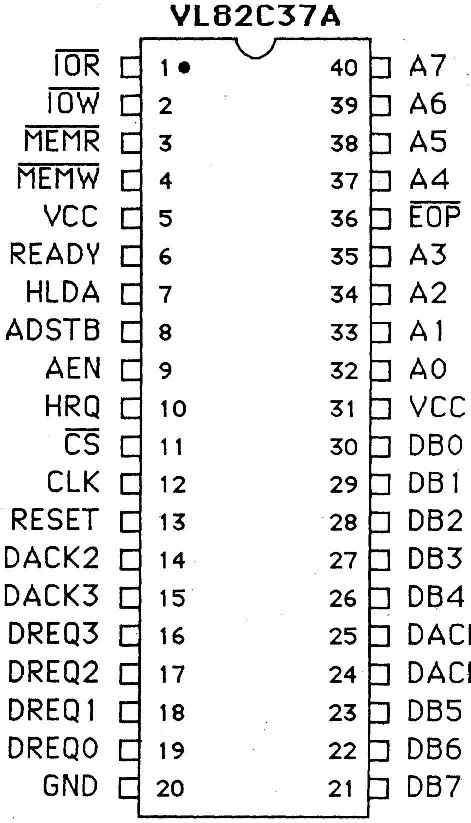
VL82C37A
$\overline{IOR}$ 1
$\overline{IOW}$ 2
$\overline{MEMR}$ 3
$\overline{MEMW}$ 4
VCC 5
READY 6
HLDA 7
ADSTB 8
AEN 9
HRQ 10
$\overline{CS}$ 11
CLK 12
RESET 13
DACK2 14
DACK3 15
DREQ3 16
DREQ2 17
DREQ1 18
DREQ0 19
GND 20
40 A7
39 A6
38 A5
37 A4
36 $\overline{EOP}$
35 A3
34 A2
33 A1
32 A0
31 VCC
30 DB0
29 DB1
28 DB2
27 DB3
26 DB4
25 DACK0
24 DACK1
23 DB5
22 DB6
21 DB7

DESCRIPTION

The VL82C37A is a CMOS implementation of the i8237A DMA controller used in many personal computers. This device is a peripheral interface for microprocessor based systems. It is designed to improve system performance by allowing external devices to directly transfer information from the system memory. The VL82C37A offers a wide variety of programmable control features to enhance data throughout. A system optimization program allows dynamic reconfiguration under program control.

The VL82C37A can be used in conjunction with an external 8-bit address register. It contains four independent channels and may be expanded to any number by cascading additional controller chips.

Three basic transfer modes allow the best use of system bus bandwidth. The VL82C37A can be programmed to operate in the burst, cycle steal or demand mode. Each channel can address a full 64K address space. Each channel can be programmed to auto-initialize at the end of a process.

ORDER INFORMATION

Plastic	Ceramic
VL82C37A-PC	VL82C37A-CC

VL7C103

300 BPS SINGLE CHIP MODEM

FEATURES

- Low cost single chip 300 bps modem
- Full answer and originate operation
- Uses switched capacitor filters
- Implements all filters and hybrid circuits on chip
- Output level up to -9 dBm with 600 ohm line impedance
- Analog loop back capibility for testing
- Power down mode for low power use
- Low power CMOS design
- Single +5 V supply ±5%
- Bell 103 compatible
- Compatible with:
  - NS74HC943 - Direct replacement
  - TMS 99532 - Functional replacement
- 20-pin package

DESCRIPTION

The VL7C103 is a single chip, full duplex 300 bit per second modem compatible with the Bell 103 specifications. It is intended for data communications over the general switched telephone network and can be used on other voice-band channels.

The VL7C103 requires a single +5 V supply, and is implemented in 3-micron CMOS switched capacitor technology. This part is pin compatible with National Semiconductors NS74HC943, and functionally compatible with Texas Instruments TMS 99532.

Applications include integrated and stand-alone low speed modems for terminals, personal computers, business systems, remote diagnostic systems, industrial control systems, and business machines. Since the VL7C103 is a CMOS circuit, it is ideal for built-in modems in portable or lap-top computers.

PIN CONFIGURATION

VL7C103

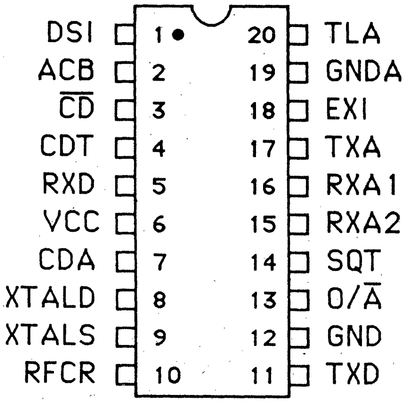

ORDER INFORMATION

Plastic	Ceramic
VL7C103-PC	VL7C103-CC

VL7C211 ADVANCE INFORMATION

1200 BAUD MODEM FILTER

FEATURES

- Transmit and receive filters with half channel compromise amplitude and group delay equalization
- Built-in call progress mode
- Answer/originate mode switching
- Bell 212A and CCITT V.22 compatible
- V.22 notch filters included
- Compatible with north american and european modem designs
- Analog loop-back capability for better built-in test modes
- Improved error rate characteristics
- Single +5 V supply ±5%
- 24-pin package
- Pin and functionally compatible with:
  AMI S35212
  Reticon R5632
- 24-pin package

PIN CONFIGURATION

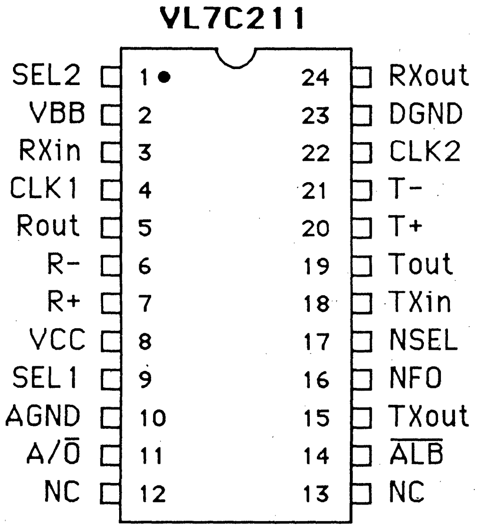

DESCRIPTION

The VL7C211 modem filter is a monolithic CMOS switched capacitor filter circuit designed for use in full duplex 1200 bit per second modems. It meets the filtering requirements of the Bell 212A and CCITT V.22 modem specifications. It includes high-band (2400 Hz) and low-band (1200 Hz) filters, half channel compromise amplitude and group delay equalizers, and smoothing filters for both bands. For CCITT V.22 applications, a notch filter is included that can be programmed for either 550 Hz or 1800 Hz. Two uncommitted operational amplifiers are included in the VL7C211 and can be used for anti-aliasing filters or gain control.

The VL7C211 is pin and function compatible with the AMI S35212 and S35212A filters and Reticon R5632. The high band filter of the VL7C211 can be scaled down by a factor of six so that it can be used to monitor call progress tones in intelligent modem applications. Like the 35212A, it has an analog loop-back mode for complete testing of the signal path.

ORDER INFORMATION

Plastic	Ceramic
VL7C211-PC	VL7C211-CC

VL7C212A ADVANCE INFORMATION

1200 BAUD MODEM

FEATURES

- Single Chip 300/1200 bps modem circuit
- Transmit and Receive filters with half channel compromise amplitude and group delay equalization
- Built-in Call Progress Mode / DTMF gen
- Answer / originate mode switching
- Bell 212A and CCITT V.22 compatible
- V.22 notch filters included
- Compatible with North American and European modem designs
- Analog loop back capability for better built-in test modes
- Improved error rate characteristics
- 24 pin package

PIN CONFIGURATION

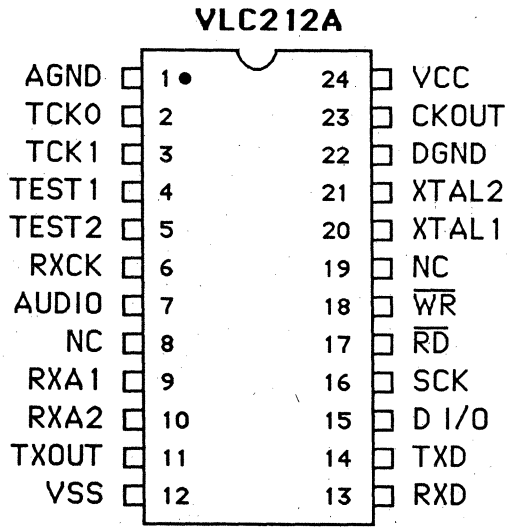

DESCRIPTION

The VL7C212A modem is a complete 300 / 1200 baud modem in a single chip. This device is designed with advanced switched capacitor technology for simple low cost applications. The device includes all of the signal processing functions required to make a 300/1200 bps Bell 212A or CCITT V.22 compatible modem. In addition to the modem functions, the device includes capabilities for call progress monitoring as well as generation of DTMF and V.22 guard tones. With the addition of a single chip microprocessor and a Data Access Arrangement (DAA) a highly integrated, low cost modem can be built around a minimum chip set. control.

The VL7C212A is pin compatible with the Sierra SC11004, and functionally compatible with devices offered by Fairchild. When used with a 7C213 modem controller, a complete Hayes command set compatible modem can be configured taking up a minimum amount of board space. Similar to the other VL7C2XX modem products, this one includes an analog loopback capability for complete self test.

ORDER INFORMATION

Plastic	Ceramic
VL7C212A-PC	VL7C212A-CC

FOR COMPLETE DATA SHEET, Call 800-443-0100, Ext. 518

VL2010 • VL2044

16 X 16 MULTIPLIER/ACCUMULATOR

FEATURES

- 16x16 parallel multiply/accumulate
- CMOS silicon-gate technology
- High speed operation
  VL20XX-90 65ns typ 90ns max
  VL20XX-65 50ns typ 65ns max
- Low power; 0.2W typical
- Performs double-precision substraction, addition, and multiplication, including rounding control
- With the exception of preload function, pin-for-pin functional replacement for WTL1010, WTL2010, TRW TDC1010J, LMA1010, and AMD29510

PIN CONFIGURATION

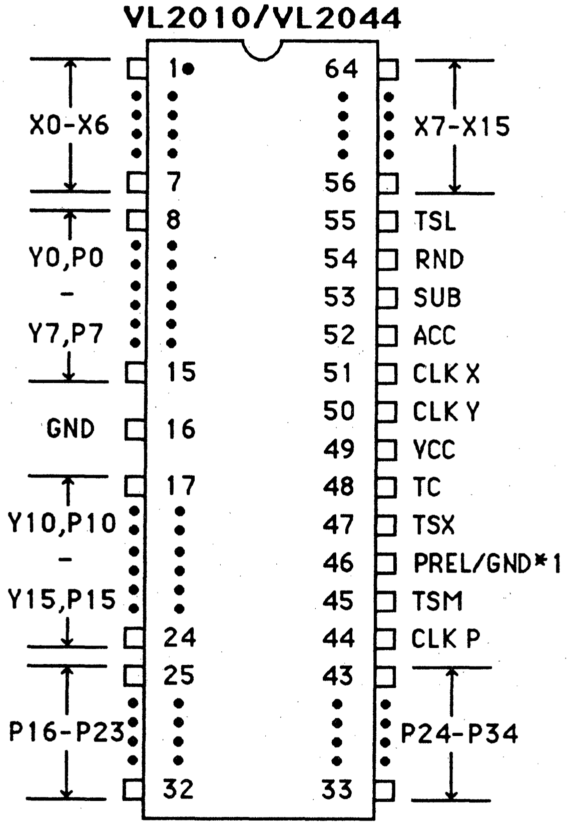

*1 This pin is ground on VL2044, and preload on VL2010.

DESCRIPTION

The VL2044 is a 16x16 parallel multiplier-accumulator (MAC). Fabricated using CMOS silicon-gate technology, the VL2044 offers ultralow power and very high performance. The high performance is achieved through high-speed operation, use of the efficient Booth's algorithm and advanced VLSI technology.

The VL2044 operates from a single 5 volt supply and is compatible with standard TTL logic levels. **Except for the preload function, the VL2044 is a pin-for-pin functional replacement for the VL2010, WTL1010, TRW TDC1010J or AMD29510.**

The VL2044 can be efficiently applied in a variety of digital signal processing functions, including digital filtering (recursive, non-recursive, wave) and FFT processing (complex multiplication, butterfly computation). In addition, the VL2044 can be employed effectively in upgrading the computational capability of mini- and microcomputer systems.

ORDER INFORMATION

Package	Speed	
	65 ns	90 ns
Ceramic DIP	VL2044-65CC	VL2044-90CC
Plastic DIP	VL2044-65CC	VL2044-90CC
PLCC	VL2044-65QC	VL2044-90QC
Pin-Grid Array	VL2044-65GC	VL2044-90GC

WHAT'S NEW IN IC MASTER

DON'T MISS THE NEW SURFACE MOUNT DEVICE IC SECTION

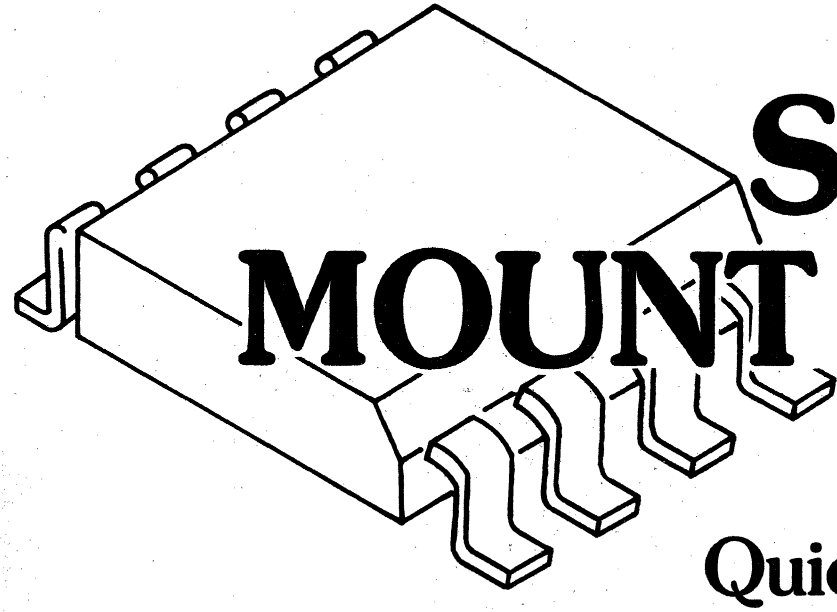

Quickly shows you by base number and package, what surface mount devices are available and from which manufacturers.

Volume II, Page 5201

Z84C00 CMOS
Z80®C CPU Central Processing Unit

Zilog

FEATURES

- The Z80C combines the high performance of the Z80 CPU with extremely low power consumption which results in increased reliability and very low system power requirements. This dramatic power savings makes the Z80C a natural choice for both hand-held and battery back-up operations.
- Two speed grades:
  Z84C00 DC to 2.5 MHz.
  Z84C00-4 DC to 4.0 MHz.
- Pin compatible with Z80 and Z80L CPUs.
- Software compatible with Z80 and Z80L CPUs. The extensive instruction set contains 158 instructions, including the 8080A instruction set as a subset.
- Single 5 volt power supply (± 10%).
- Duplicate set of both general-purpose and flag registers.
- Two sixteen bit index registers.
- Low Power Consumption
  Z84C00 9 mA typical Icc
  Z84C00-4 15 mA typical Icc
  Standby current less than 10 μA @ 5V
- On-chip dynamic memory refresh counter.

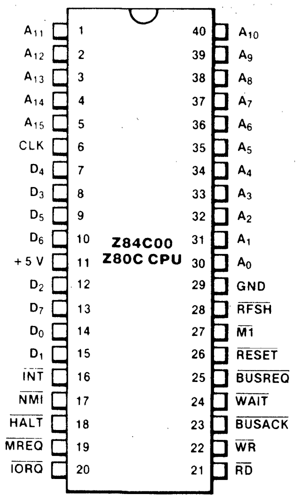
Z84C00
Z80C CPU
1 A_{11}
2 A_{12}
3 A_{13}
4 A_{14}
5 A_{15}
6 CLK
7 D_4
8 D_3
9 D_5
10 D_6
11 +5 V
12 D_2
13 D_7
14 D_0
15 D_1
16 $\overline{INT}$
17 $\overline{NMI}$
18 $\overline{HALT}$
19 $\overline{MREQ}$
20 $\overline{IORQ}$
40 A_{10}
39 A_9
38 A_8
37 A_7
36 A_6
35 A_5
34 A_4
33 A_3
32 A_2
31 A_1
30 A_0
29 GND
28 $\overline{RFSH}$
27 $\overline{M1}$
26 $\overline{RESET}$
25 $\overline{BUSREQ}$
24 $\overline{WAIT}$
23 $\overline{BUSACK}$
22 $\overline{WR}$
21 $\overline{RD}$

Z84C20 CMOS
Z80®C PIO Parallel Input/Output

FEATURES

- Provides a direct interface between Z80 microcomputer systems and peripheral devices.
- Two ports with interrupt-driven handshake for fast response.
- Four programmable operating modes: Output, Input, Bidirectional (Port A only), and Bit Control
- Programmable interrupts on peripheral status conditions.
- Standard Z80 Family bus-request and prioritized interrupt-request daisy chains implemented without external logic.
- The eight Port B outputs can drive Darlington transistors (1.5 mA at 1.5V).

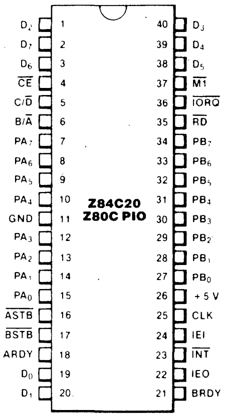
Z84C20
Z80C PIO
1 D_2
2 D_7
3 D_6
4 $\overline{CE}$
5 $C/\overline{D}$
6 $B/\overline{A}$
7 PA_7
8 PA_6
9 PA_5
10 PA_4
11 GND
12 PA_3
13 PA_2
14 PA_1
15 PA_0
16 $\overline{ASTB}$
17 $\overline{BSTB}$
18 ARDY
19 D_0
20 D_1
40 D_3
39 D_4
38 D_5
37 $\overline{M1}$
36 $\overline{IORQ}$
35 $\overline{RD}$
34 PB_7
33 PB_6
32 PB_5
31 PB_4
30 PB_3
29 PB_2
28 PB_1
27 PB_0
26 +5 V
25 CLK
24 IEI
23 $\overline{INT}$
22 IEO
21 BRDY

Z84C30 CMOS
Z80® C CTC Counter/Timer Circuit

FEATURES

- Four independently programmable counter/timer channels, each with a readable downcounter and a selectable 16 or 256 prescaler. Downcounters are reloaded automatically at zero count.
- Selectable positive or negative trigger initiates timer operation.
- Three channels have Zero Count/Timeout outputs capable of driving Darlington transistors.
- Interfaces directly to the Z80 CPU or—for baud rate generation—to the Z80 SIO.
- Standard Z80 Family daisy-chain interrupt structure provides fully vectored, prioritized interrupts without external logic. The CTC may also be used as an interrupt controller.

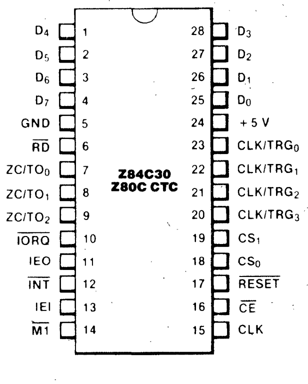
Z84C30
Z80C CTC
1 D_4
2 D_5
3 D_6
4 D_7
5 GND
6 $\overline{RD}$
7 ZC/TO_0
8 ZC/TO_1
9 ZC/TO_2
10 $\overline{IORQ}$
11 IEO
12 $\overline{INT}$
13 IEI
14 $\overline{M1}$
28 D_3
27 D_2
26 D_1
25 D_0
24 +5 V
23 CLK/TRG_0
22 CLK/TRG_1
21 CLK/TRG_2
20 CLK/TRG_3
19 CS_1
18 CS_0
17 $\overline{RESET}$
16 $\overline{CE}$
15 CLK

Z84C40/1/2/4 CMOS Z80® C SIO Serial Input/Output Controller

Zilog

FEATURES

- Two independent full-duplex channels, with separate control and status lines for modems or other devices.
- Data rate in the x1 clock mode of 0 to 800K bits/second with a 4.0 MHz clock.
- Asynchronous protocols: everything necessary for complete messages in 5, 6, 7, or 8 bits/character. Includes variable stop bits and several clock-rate multipliers; break generation and detection; parity; overrun and framing error detection.

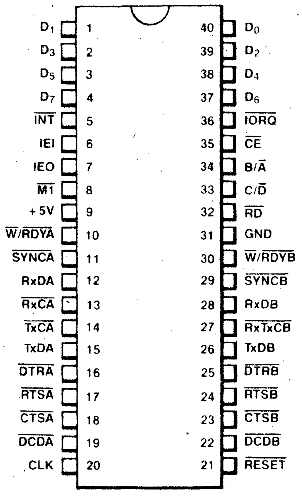
D1 1
D3 2
D5 3
D7 4
INT 5
IEI 6
IEO 7
M1 8
+5V 9
W/RDYA 10
SYNCA 11
RxDA 12
RxCA 13
TxCA 14
TxDA 15
DTRA 16
RTSA 17
CTSA 18
DCDA 19
CLK 20
40 D0
39 D2
38 D4
37 D6
36 IORQ
35 CE
34 B/A
33 C/D
32 RD
31 GND
30 W/RDYB
29 SYNCB
28 RxDB
27 RxTxCB
26 TxDB
25 DTRB
24 RTSB
23 CTSB
22 DCDB
21 RESET

Z84C40
Z80C SIO/0

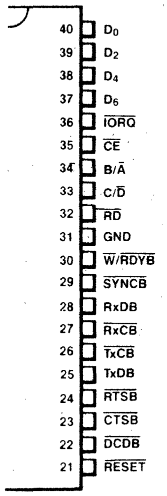
40 D0
39 D2
38 D4
37 D6
36 IORQ
35 CE
34 B/A
33 C/D
32 RD
31 GND
30 W/RDYB
29 SYNCB
28 RxDB
27 RxCB
26 TxCB
25 TxDB
24 RTSB
23 CTSB
22 DCDB
21 RESET

Z84C41
Z80C SIO/1

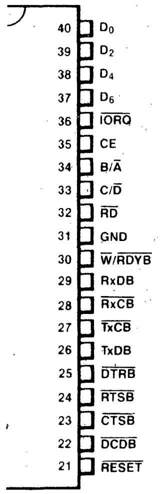
40 D0
39 D2
38 D4
37 D6
36 IORQ
35 CE
34 B/A
33 C/D
32 RD
31 GND
30 W/RDYB
29 RxDB
28 RxCB
27 TxCB
26 TxDB
25 DTRB
24 RTSB
23 CTSB
22 DCDB
21 RESET

Z84C42
Z80C SIO/2

Z8® Z8601 Microcomputer, 2K ROM Z8® Z8603 Prototyping Device with EPROM Interface

FEATURES

- Complete microcomputer, 2K bytes of ROM, 128 bytes of RAM, 32 I/O lines, and up to 62K bytes addressable external space each for program and data memory.
- 144-byte register file, including 124 general-purpose registers, four I/O port registers, and 16 status and control registers.
- Average instruction execution time of 1.5μs, maximum of 3μs.
- Vectored, priority interrupts for I/O, counter/timers, and UART.
- Full-duplex UART and two programmable 8-bit counter/timers, each with a 6-bit programmable prescaler.
- Register Pointer so that short, fast instructions can access any of nine working register groups in 1 μs.
- On-chip oscillator that accepts crystal or external clock drive.
- Single +5V power supply—all pins TTL-compatible.

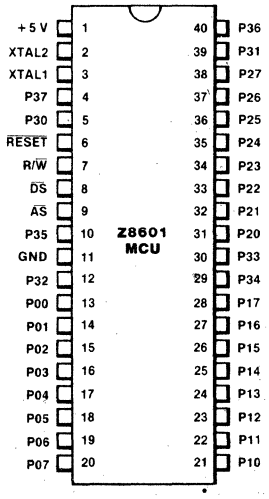
+5V 1
XTAL2 2
XTAL1 3
P37 4
P30 5
RESET 6
R/W 7
DS 8
AS 9
P35 10
GND 11
P32 12
P00 13
P01 14
P02 15
P03 16
P04 17
P05 18
P06 19
P07 20
Z8601 MCU
40 P36
39 P31
38 P27
37 P26
36 P25
35 P24
34 P23
33 P22
32 P21
31 P20
30 P33
29 P34
28 P17
27 P16
26 P15
25 P14
24 P13
23 P12
22 P11
21 P10

Z8060 Z8000® FIFO Buffer Unit and Z-FIO Expander

FEATURES

- Bidirectional, asynchronous data transfer capability.
- Large 128-bit-by-8-bit buffer memory.
- Two-wire, interlocked handshake protocol.
- Wire-ORing of empty and full outputs for sensing of multiple-unit buffers.
- 3-state data outputs.
- Connects any number of FIFOs in series to form buffer of any desired length.
- Connects any number of FIFOs in parallel to form buffer of any desired width.

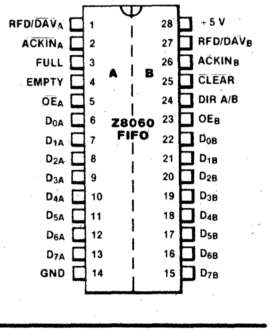
RFD/DAVA 1
ACKINA 2
FULL 3
EMPTY 4
OEA 5
D0A 6
D1A 7
D2A 8
D3A 9
D4A 10
D5A 11
D6A 12
D7A 13
GND 14
A
B
Z8060 FIFO
28 +5V
27 RFD/DAVB
26 ACKINB
25 CLEAR
24 DIR A/B
23 OEB
22 D0B
21 D1B
20 D2B
19 D3B
18 D4B
17 D5B
16 D6B
15 D7B

FOR COMPLETE DATA SHEET, Call 800-443-0100, Ext. 518

Z8® Z8681/82 ROMless Microcomputer

Zilog

FEATURES

- Complete microcomputer, 24 I/O lines, and up to 64K bytes of addressable external space each for program and data memory.
- 143-byte register file, including 124 general-purpose registers, 3 I/O port registers, and 16 status and control registers.
- Vectored, priority interrupts for I/O, counter/timers, and UART.
- On-chip oscillator that accepts crystal or external clock drive.
- Register Pointer so that short, fast instructions can access any one of the nine working-register groups.
- Single +5V power supply—all I/O pins TTL compatible.
- Z8681/82 available in 8 MHz. Z8681 also available in 12 MHz.
- Full-duplex UART and two programmable 8-bit counter/timers, each with a 6-bit programmable prescaler

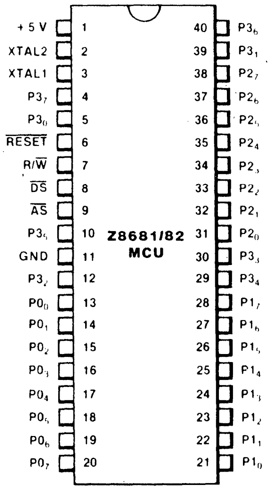
Z8681/82
MCU
+5V 1
XTAL2 2
XTAL1 3
$P3_7$ 4
$P3_0$ 5
RESET 6
R/W 7
DS 8
AS 9
$P3_5$ 10
GND 11
$P3_2$ 12
$P0_0$ 13
$P0_1$ 14
$P0_2$ 15
$P0_3$ 16
$P0_4$ 17
$P0_5$ 18
$P0_6$ 19
$P0_7$ 20
40 $P3_6$
39 $P3_1$
38 $P2_7$
37 $P2_6$
36 $P2_5$
35 $P2_4$
34 $P2_3$
33 $P2_2$
32 $P2_1$
31 $P2_0$
30 $P3_3$
29 $P3_4$
28 $P1_7$
27 $P1_6$
26 $P1_5$
25 $P1_4$
24 $P1_3$
23 $P1_2$
22 $P1_1$
21 $P1_0$

Z8530 SCC Serial Communications Controller

FEATURES

- Two independent, 0 to 2.5M bit/second, full-duplex channels, each with a separate crystal oscillator, baud rate generator, and Digital Phase-Locked Loop for clock recovery.
- Multi-protocol operation under program control; programmable for NRZ, NRZI, or FM data encoding.
- Asynchronous mode with five to eight bits and one, one and one-half, or two stop bits per character; programmable clock factor; break detection and generation; parity, overrun, and framing error detection.
- Synchronous mode with internal or external character synchronization on one or two synchronous characters and CRC generation and checking with CRC-16 or CRC-CCITT preset to either 1s or 0s.
- SDLC/HDLC mode with comprehensive frame-level control, automatic zero insertion and deletion, I-field residue handling, abort generation and detection, CRC generation and checking, and SDLC Loop mode operation.

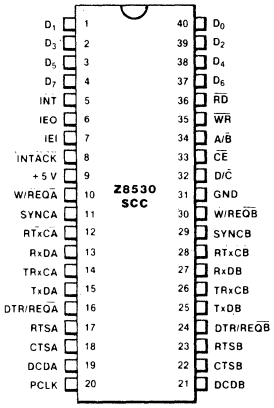
Z8530
SCC
D_1 1
D_3 2
D_5 3
D_7 4
INT 5
IEO 6
IEI 7
INTACK 8
+5V 9
W/REQA 10
SYNCA 11
RTxCA 12
RxDA 13
TRxCA 14
TxDA 15
DTR/REQA 16
RTSA 17
CTSA 18
DCDA 19
PCLK 20
40 D_0
39 D_2
38 D_4
37 D_6
36 RD
35 WR
34 A/B
33 CE
32 D/C
31 GND
30 W/REQB
29 SYNCB
28 RTxCB
27 RxDB
26 TRxCB
25 TxDB
24 DTR/REQB
23 RTSB
22 CTSB
21 DCDB

Z8536 CIO Counter/Timer and Parallel I/O Unit

FEATURES

- Two independent 8-bit, double-buffered, bidirectional I/O ports plus a 4-bit special-purpose I/O port. I/O ports feature programmable polarity, programmable direction (Bit mode), "pulse catchers," and programmable open-drain outputs.
- Four handshake modes, including 3-Wire (like the IEEE-488).
- REQUEST/WAIT signal for high-speed data transfer.
- Flexible pattern-recognition logic, programmable as a 16-vector interrupt controller.
- Three independent 16-bit counter/timers with up to four external access lines per counter/timer (count input, output, gate, and trigger), and three output duty cycles (pulsed, one-shot, and square-wave), programmable as retriggerable or nonretriggerable.
- Easy to use since all registers are read/write.

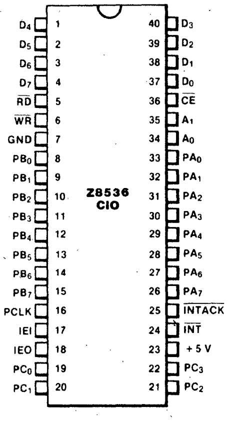
Z8536
CIO
D_4 1
D_5 2
D_6 3
D_7 4
RD 5
WR 6
GND 7
PB_0 8
PB_1 9
PB_2 10
PB_3 11
PB_4 12
PB_5 13
PB_6 14
PB_7 15
PCLK 16
IEI 17
IEO 18
PC_0 19
PC_1 20
40 D_3
39 D_2
38 D_1
37 D_0
36 CE
35 A_1
34 A_0
33 PA_0
32 PA_1
31 PA_2
30 PA_3
29 PA_4
28 PA_5
27 PA_6
26 PA_7
25 INTACK
24 INT
23 +5V
22 PC_3
21 PC_2

Z8590/4 Non-Multiplexed Bus, Z8090/4 Z-BUS Z8® UPC Universal Peripheral Controllers

FEATURES

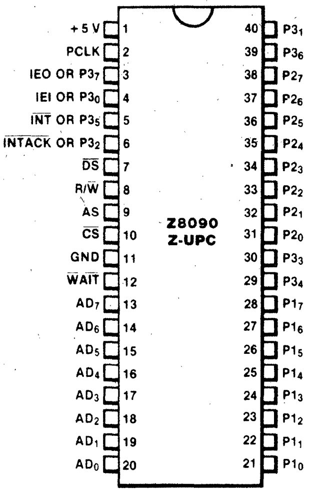
+5V 1
PCLK 2
IEO OR $P3_7$ 3
IEI OR $P3_0$ 4
$\overline{INT}$ OR $P3_5$ 5
$\overline{INTACK}$ OR $P3_2$ 6
$\overline{DS}$ 7
R/$\overline{W}$ 8
$\overline{AS}$ 9
$\overline{CS}$ 10
GND 11
$\overline{WAIT}$ 12
AD_7 13
AD_6 14
AD_5 15
AD_4 16
AD_3 17
AD_2 18
AD_1 19
AD_0 20
Z8090
Z-UPC
40 $P3_1$
39 $P3_6$
38 $P2_7$
37 $P2_6$
36 $P2_5$
35 $P2_4$
34 $P2_3$
33 $P2_2$
32 $P2_1$
31 $P2_0$
30 $P3_3$
29 $P3_4$
28 $P1_7$
27 $P1_6$
26 $P1_5$
25 $P1_4$
24 $P1_3$
23 $P1_2$
22 $P1_1$
21 $P1_0$

- Complete slave Z8 microcomputer, for distributed processing use.
- Unmatched power of Z8 architecture and instruction set.
- Three programmable I/O ports, two with optional 2-Wire Handshake.
- Six levels of priority interrupts from eight sources: six from external sources and two from internal sources.
- Two programmable 8-bit counter/timers each with a 6-bit prescaler. Counter/Timer T0 is driven by an internal source, and Counter/Timer T1 can be driven by internal or external sources. Both counter/timers are independent of program execution.
- 256-byte register file, accessible by both the master CPU and UPC, as allocated in the UPC program.
- Z8090 and Z8590—2K bytes of on-chip ROM for efficiency and versatility.
- Z8094 and Z8594—2K bytes of RAM or EPROM for efficiency and versatility.

Z8800 ROMless Super8™ Microcomputer

FEATURES

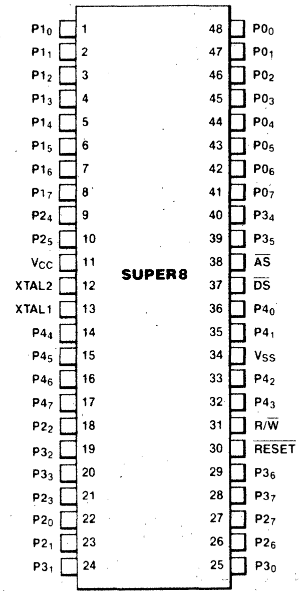
$P1_0$ 1
$P1_1$ 2
$P1_2$ 3
$P1_3$ 4
$P1_4$ 5
$P1_5$ 6
$P1_6$ 7
$P1_7$ 8
$P2_4$ 9
$P2_5$ 10
V_{CC} 11
XTAL2 12
XTAL1 13
$P4_4$ 14
$P4_5$ 15
$P4_6$ 16
$P4_7$ 17
$P2_2$ 18
$P3_2$ 19
$P3_3$ 20
$P2_3$ 21
$P2_0$ 22
$P2_1$ 23
$P3_1$ 24
SUPER8
48 $P0_0$
47 $P0_1$
46 $P0_2$
45 $P0_3$
44 $P0_4$
43 $P0_5$
42 $P0_6$
41 $P0_7$
40 $P3_4$
39 $P3_5$
38 $\overline{AS}$
37 $\overline{DS}$
36 $P4_0$
35 $P4_1$
34 V_{SS}
33 $P4_2$
32 $P4_3$
31 R/$\overline{W}$
30 $\overline{RESET}$
29 $P3_6$
28 $P3_7$
27 $P2_7$
26 $P2_6$
25 $P3_0$

- Improved Z8® instruction set includes multiply and divide instructions, Boolean and BCD operations.
- Additional instructions support threaded-code languages, such as "Forth."
- 325 byte registers, including 272 general-purpose registers, and 53 mode and control registers.
- Addressing of up to 128K bytes of memory.
- Two register pointers allow use of short and fast instructions to access register groups within 1 μs.
- Direct Memory Access controller (DMA).
- Two 16-bit counter/timers.
- Up to 32 bit-programmable and 8 byte-programmable I/O lines, with 2 handshake channels.
- Interrupt structure supports:
  - ☐ 27 interrupt sources
  - ☐ 16 interrupt vectors (2 reserved for future versions)
  - ☐ 8 interrupt levels
  - ☐ Servicing in 1 μs. (1 level only)
- Full-duplex UART with special features.
- On-chip oscillator.
- 12 MHz clock.

Z8038 Z8000® Z-FIO FIFO Input/Output Interface Unit

FEATURES

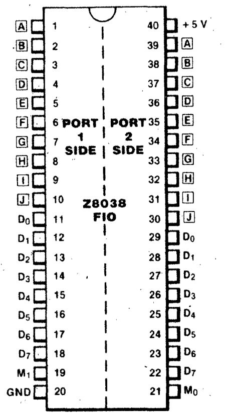
A 1
B 2
C 3
D 4
E 5
F 6
G 7
H 8
I 9
J 10
D_0 11
D_1 12
D_2 13
D_3 14
D_4 15
D_5 16
D_6 17
D_7 18
M_1 19
GND 20
PORT 1 SIDE
PORT 2 SIDE
Z8038 FIO
40 +5V
39 A
38 B
37 C
36 D
35 E
34 F
33 G
32 H
31 I
30 J
29 D_0
28 D_1
27 D_2
26 D_3
25 D_4
24 D_5
23 D_6
22 D_7
21 M_0

- 128-byte FIFO buffer provides asynchronous bidirectional CPU/CPU or CPU/peripheral interface, expandable to any width in byte increments by use of multiple FIOs.
- Interlocked 2-Wire or 3-Wire Handshake logic port mode; Z-BUS or non-Z-BUS interface.
- Pattern-recognition logic stops DMA transfers and/or interrupts CPU; preset byte count can initiate variable-length DMA transfers.
- Seven sources of vectored/nonvectored interrupt which include pattern-match, byte count, empty or full buffer status; a dedicated "mailbox" register with interrupt capability provides CPU/CPU communication.
- $\overline{\text{REQUEST}}/\overline{\text{WAIT}}$ lines control high-speed data transfers.
- All functions are software controlled via directly addressable read/write registers.

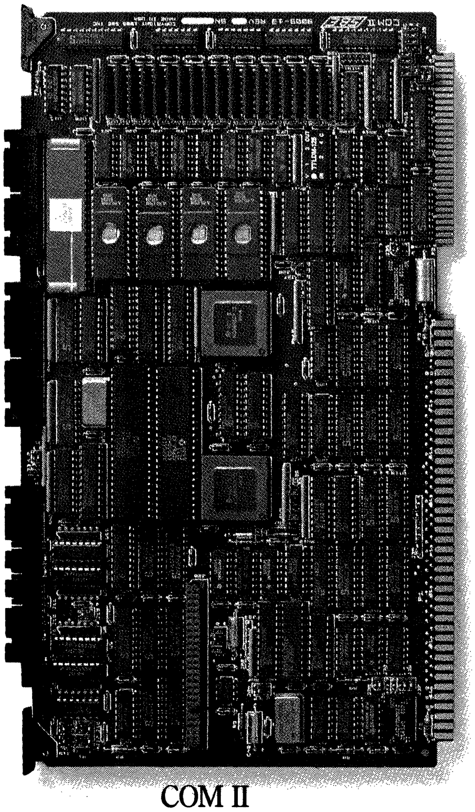

COM II

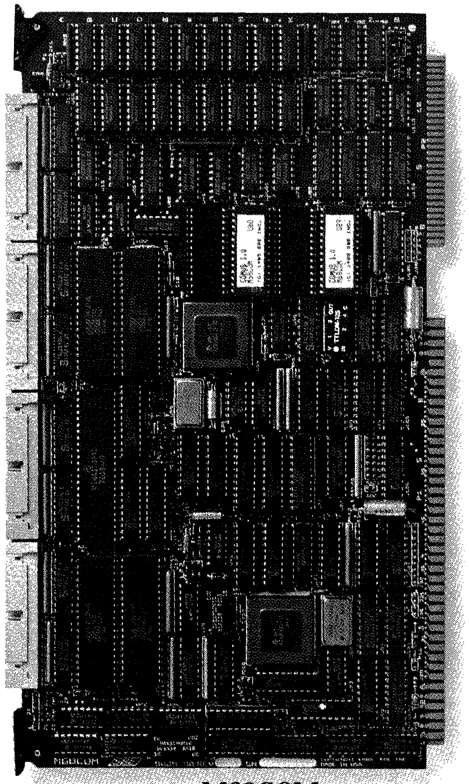

M68COM

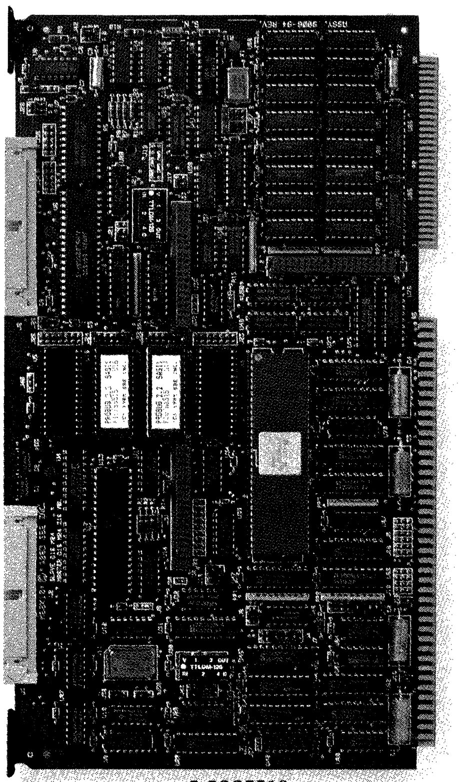

M68K10

New X.25 solutions. From $1200.*

Three intelligent Multibus† boards from SBE, all with X.25 on board. Each is a complete X.25 communication solution. Each offers multiple hardware options. And all three are ready to use right out of the box.

There's no extra software to buy. You get everything you need to implement levels 1, 2 and 3 of the ISO model in your Multibus system.

Your choice of three communication boards gives you unprecedented hardware flexibility. Choose up to 8 serial ports. Baud rates from 1 bit to 3 megabits per second. DMA channels–2, 4, or none. And on-board RAM–128K, 256K, 512K, or 1 Megabyte.

The starting price is $1200 in quantity 100 for a card with two serial ports, 128K bytes of RAM, and X.25 in EPROM.

SBE offers in-depth technical support hard to find elsewhere. A phone call puts you right on the line with one of our top technical people.

We provide hardware, software and support–everything you need from a single source.

SBE, Inc., 2400 Bisso Lane, Concord, California 94520. Phone us for literature mailed the same day.

1-800-221-6458. In California 1-800-328-9900 or (415) 680-7722. TWX 910-366-2116.

SBE

Your partner in computer boards and systems.

---

*In quantity 100. Consult factory for other quantity prices.

†Multibus is a trademark of Intel.

Launch your aerospace designs sooner!

Get HP's new Microprogram Development Subsystem and multi-emulation capability.

To get your aerospace designs to market faster, think HP real-time emulation and analysis products. The new HP 64276 Microprogram Development Subsystem (microDS) can really speed system development along.

By combining the new HP microDS with other HP 64000 development system tools like the HP 64610S Timing Analyzer and HP 64320S 25MHz State Analyzer, you'll have more power to help you stay on schedule. And maintain high standards of product quality.

You can even link our microDS to other HP emulators, to support your multiprocessor designs. We offer microprogram development support for AMD AM2900/AM 29100/AM29300 families, the TI AS888/890 family, and other vendors' families, too.

Designing for military applications? You'll benefit from our new F9450 emulator. DSP applications? There's our new TMS 32010 emulator. And that's just the beginning.

Only HP offers you a wide choice of high-performance emulator products, plus the systems, tools, and technical support you need at each step of the hardware and software development process—from inception to completion. So the entire process runs smoother.

Why wait? Start launching your aerospace designs faster and easier today. For more information, call the HP sales office nearest you listed in the telephone directory white pages. Ask for the electronic instruments department. Or call us at 1-800-447-3282 (in Colorado call 1-590-3340 collect) for information on our new emulators.

HEWLETT PACKARD

DS-15522
9450
BIT
SLICE
64276
32010

INTRODUCTION TO MICROPROCESSOR DEVELOPMENT SYSTEMS

This section describes the tools used in developing software programs for microprocessors. Microprocessors supported range from 2-bit slice families and 4-bit processors to 32-bit machines. Development systems described in the Master Selection Guide range from simple, single-user text-editing stations to multiuser computers dedicated to software development. Manufacturers are sequenced alphabetically, and each system is described by a listing of performance parameters. These parameters include supported microprocessors, user RAM, mass-memory size and type, software support. The software and tools listed range from standard executive programs to high-level language compilers and interpreters.

Detailed Product Information provided by:

American Automation	1901
Hi-Level Technology	1902
Inmos	1903
Motorola Semiconductor	1904
Orion Instruments	1908

The manufacturers listed above have provided detailed information on their latest and most significant products.

EINFÜHRUNG MIKROPROZESSOR-ENTWICKLUNGS-SYSTEME

Deiser neue Abschnitt beschreibt alle verwendeten Hilfsmittel zur Entwicklung von Software für Mikroprozessoren. Die unterstützten Mikroprozessoren reichen von 2-Bit-Slice und 4-Bit Prozessoren bis zu 32-Bit Maschinen. Die im Master Selection Guide beschriebenen Entwicklungssysteme reichen von einfachen; Single-user Textedition-Stationen bis zu Multiuser-Computern für die Software-Entwicklung. Die Hersteller sind in alphabetischer Reihenfolge aufgeführt, und jedes System wird durch eine Auflistung de Funktionsparameter beschreiben. Diese Parameter umfassen die unterstützten Mikroprozessoren, die Gröβe von verwendbarem RAM, die Massenspeicher-Gröβe und Art, die Anzahl der anschlieβbaren Stationen und verfügbare Peripheriegeräte. Die Software-Hilfsmittel reichen von Standard Executive Programmen bis zu Compilern und Interpretern für höhere Programmiersprachen.

INTRODUCTION AUX SYSTEMES DE DEVELOPPEMENT DES MICRO-ORDINATEURS

Cette Section est nouvelle cette année. Elle décrit les outils utilises dans le developpement des programmes software pour micro-ordinateurs. Les micro-ordinateurs considérés a'echelonnent des familles à 2 bits aux ordinateurs de 4 bits, et aux appareils de 32 bits. Les systèmes de développement décrits dans le Guide Général de Sélection vont de la simple station d'édition de texte pour un utilisateur, aux ordinateurs à utilisateurs multiples et dedies au developpement du software. Les fabricants sont énumérés par ordre alphabétique, et chaque système est décrit au travers d'une liste de paramètres de performance. Ces paramètres comprennent les micro-ordinateurs supportés, la RAM avec maximum d'utilisateurs, la taille et le type de mémoire de masse, le nombre de stations utilisatrices, et l'équipement périphérique disponible. Les outils software considérés s'etendent des programmes standards d'exécution aux programmes plus puissants de traduction de language et de compilation.

INTRODUCCIÓN A LOS SISTEMAS DE DESARROLLO DEL MICROPROCESOR

Esta sección, nueva para este año, describe las herramientas usadas en el desarrollo de programas para microprocesores.

Microprocesores con radio de acción de familias de 2-bit y 4-bit a equipo de 32-bit. Sistemas de desarrollo descritas en la Guía Maestra de Selección abarca de una simple estación editora, a computadoras de uso múltiple dedicadas al desarrollo de programas. Los fabricantes aparecen en sequencia alfabética, y cada sistema es descrito con una lista de parámetros de rendimiento. Estos parámetros incluyen apoyo a microprocesores, uso máximo de RAM, tamaño y tipo de memorias, número de estaciones de operadores, y equipo periferal disponsible. Programas mencionados abarcan de programas ejecutivos standard a lenguaje de alto nivel para compiladores e intérpretes.

マイクロプロセサー開発システムへの案内

本年から新たに加わったこのセクションにはマイクロプロセサーのソフトウエアプログラムを開発する為の情報が記載されています。カバーされているマイクロプロセサーは２ビットスライスファミリー，４ビットプロセサーから３２ビットマシーン迄あります。マスターセレクションガイド中の開発システムは簡単な個人が使用するテキスト編集ステーションからソフトウエア開発用多人数使用のコンピュータ迄と広くカバーされています。メーカーはＡＢＣ順に，各システムはその性能パラメーターの記載毎に説明しています。このパラメーターは必要なマイクロプロセサー，マキシマムユーザーＲＡＭ，マスメモリーサイズ，形名，ユーザーステーションの数，週辺機器等を網羅しています。

記載されているソフトウエア情報は標準エクザクティブプログラムから高級なランゲージコンパイラー，インタープリターに及んでいます。

MDS: Dedicated or Universal?

Microprocessor development systems (MDSs) have evolved from simple design aids to dedicated computer systems. The variety of MDS hardware now available ranges from simple PROM programmers for entering hand-assembled code to sophisticated multiuser systems representing a sizeable capital investment.

High-end software tools generally are of no concern to designers who use microprocessors primarily for logic replacement. Many programs for these applications can be hand-written in machine code or in very simple assembly language, hand-assembled and edited manually with scissors and paste. But choosing a more sophisticated system requires understanding the relationships between the MDS, the processor it supports and the software tools available for assisting in program development.

Until recently, the choice was limited between a dedicated system supporting a single processor or a family of processors, and a universal system supporting several different processor families. Dedicated-system supporters argue that most of the 50 or more existing microprocessor companies can introduce at least one new processor each year, with each new processor often program-compatible with its predecessor. And it is more desirable to upgrade existing software for these new devices than to start a massive software redesign project.

Moreover, the argument continues, dedicated system suppliers (who also supply the microprocessors supported) can provide software development tools for new processors at least a year before they are available in universal systems. Finally, it is generally acknowledged that universality in an MDS often requires some sacrifice in depth of coverage. Implicit in these arguments, of course, is user commitment to a specific processor or vendor.

On the other hand, universal systems offer a repertoire of multivendor chip support, generally centered about 8-bit processors. The strongest argument for using these systems appears to be the freedom to evaluate the parade of new processor chips emerging from various semiconductor houses. For example, in addition to facilitating hardware/software integration of prototype design, available universal systems can compare the performance of an 8085 (Intel Corp.) against the Z80 (Zilog Inc.), 6800 or 6802 (Motorola Semiconductor Products Inc.), 3872 (Fairchild Camera and Instrument Corp.), the TMS9900 (Texas Instruments Inc.), and the 3870 and 3872 (Mostek Corp.).

To counter the threat posed by universal systems, some vendors are offering systems described as vertical rather than universal (horizontal) or dedicated. These systems support only one vendor's processors, but the devices supported represent a wide performance range. To illustrate, one MDS vendor's system supports 12 of the company's processors, which range from a 2-bit slice up through a 16-bit processor. A user can upgrade a basic system by adding an assembler, high-level language, and an in-circuit emulator module for any of the 12 processors.

Sometimes universality can be acquired with an existing dedicated MDS by upgrading the system with emulators and other development tools. Typically, the instrument connects between the host computer (or dedicated development system), using a different personality pod to provide real-time emulation for a variety of MPUs.

Multistation development systems become another option as program sizes grow. One programmer typically can generate 10 debugged and documented lines of code per day, each line representing from 2 to 10 bytes of machine code. If a time-critical project requires a 100-kbyte application program to be completed within 3 months, then at least 8 programmers are required, each generating 100 bytes of machine code per day. Such requirements need systems resembling a full-fledged computer. with price tags upwards of $100,000 and with as many as 8 programming stations.

Alternatively, several simple development systems can be linked to a mainframe to perform dedicated development functions such as compiling and debugging. The mainframe performs project management functions such as file-sharing and maintenance. If a universal system is needed, cross-software is available from both software houses and MDS vendors. Cross-software allows a program for one processor to be written on a machine containing a different processor. For example, a cross-assembler for the 6800 produces 6800 code, but it executes on a PDP-11 computer.

MDS Hardware

A typical MDS consists of a central processor, mass memory, control console, and software development tools — such as editors, assemblers, compilers and linkers — for translating the programming (source) language and revising the source text. Most systems also provide a printer for generating hard copy.

The CPU executes the control functions necessary for software development and can execute the editor, assembler or program under development.

Mass memory, also called the "file," stores operating programs, developed programs and data. Main system memory stores data and host programs (editor, compiler, etc.) or developed programs. Stored data include editor workspace, symbol tables, input/output (I/O) buffers, and data generated during program development. Main memory can be extended by mass memory.

The lowest level of mass-memory media is punched paper tape in which data are entered by teletypewriter. Because of its low speed, this type of storage is recommended for developing programs having less than 100 lines of code.

Next is magnetic tape cassette with read/write speeds ranging up to 400 characters per second. Tape-cassette systems are economical for programs between 100 and 1000 lines of code.

Long programs require the speed of flexible-disc storage with data-transfer rates exceeding 1000 characters per second. Flexible-disc storage is recommended for programs with between 1000 and 10,000 lines of code. Longer programs require the megabit-per-second transfer rates of hard-disc systems which can store up to tens of megabytes of data. These systems are, of course, the most expensive.

Control consoles provide the means to input source programs, debugging commands, operating system commands and data, and they provide operator feedback such as assembly listings and register displays. Controlled by interactive software, these terminals provide continually updated CRT displays of register content and entire segments of the program under development.

CRT terminals are classified as either dumb, smart or intelligent. Dumb terminals are nonprogrammable and have a limited number of functions. Smart terminals contain an MPU, memory, or both, and they have text-editing capability. Intelligent terminals contain one or more MPUs that can be user-programmed.

To facilitate text editing, CRT displays generally provide information highlighting on the screen, blinking displays, insert/delete capability and smooth scrolling. Console keyboards provide 128 ASCII character code, and keyboard life typically is about 300-million operations. Intelligent keyboards usually have self-diagnostics displayed on the CRT.

As more logic signals formerly accessible for test procedures become buried within the microprocessor chip, the various debugging tools become also increasingly important elements of an MDS.

An in-circuit emulator is a logic card or module cable-connected to the microprocessor socket of the prototype system. The emulator duplicates the processor function and relays indications of system operation to the MDS console or terminal. Usually the MDS RAM simulates ROM or PROM in the system under test. After RAM content is debugged, it is transferred to the prototype's memory.

Single-step facility is a hardware debugging aid that allows the MDS operator to step through the program one instruction at a time while concurrently monitoring system operation.

A logic analyzer can set up breakpoints in the program (such as an address) that stop program execution when encountered. The analyzer stores a block of bus transactions in a limited amount of memory that is refreshed each cycle. When a breakpoint stops program execution, the analyzer displays a number of logical events occurring prior to the breakpoint. Thus the operator can determine if events leading to the breakpoints are correct and modify the program as required, or continue execution.

Printers provide hard-copy records of the developed program. Mechanical types are relatively slow, generating from 150 to 1800 lines per minute, and providing multiple copies of the printout. Higher speeds are provided by thermal, optical, chemical or electrical printers with speeds ranging up to about 21,000 lines per minute. Serial printers produce one character at a time, and line printers generate one line at a time in parallel-character format.

Many systems provide options for linking the MDS with other systems for data exchange. These include paper tape punch and reader, and a modem (modulator-demodulator) that connects an MDS to a large computer via telephone lines. Finally, most systems have either a standard or optional PROM programmer for entering developed programs into prototype memory.

Software Tools

MDS software-tool sophistication has become similar to that of minicomputer software. Many software tools are common to any MDS.

Executive programs (also called operating systems) control the interaction between the MDS peripherals and other software tools by keeping track of time, enforcing correct event sequencing, and controlling I/O functions. An operating system also provides user commands for editing, assembling, compiling, relocating, executing, and debugging the user-developed program from the control console. Some operating systems can perform file-management tasks on floppy or hard-disc memory. Other systems provide this capability in a separate software package called a "file-management system," or include it in the text editor.

Text editors, or simply editors, are programs that allow an

MDS: Dedicated or Universal

operator to enter a source code (assembly or higher-level language) into the MDS memory through an interactive terminal with a keyboard. Through the editor the operator can add, delete, move, change, and display or list selected portions of the source program.

Assemblers are programs that convert source code generated with an editor to machine language (object or binary code). The source code is the assembly language (alphabetic symbols called mnemonics) of the processor for which the program is being written. Assemblers vary in their ability to handle macros (blocks of often-used instruction sequences activated by a single instruction), to generate relocatable code, and to allow certain pseudo-operations. The latter is an instruction that gives information to the assembler instead of causing machine code to be generated.

Compiler and interpreter programs translate high-level programming languages into machine language. Each approach has advantages and drawbacks. Both tools translate each high-level statement into a series of binary instructions. However, a compiler translates the entire program before execution can take place. On the other hand, an interpreter translates and immediately executes each high-level statement before proceeding to the next translation.

Interpreters are more efficient for making program changes since each instruction is executed as it is typed. Therefore, an instruction can be entered, executed, changed, and executed again without the need to exercise the rest of the program. With a compiler, each change requires a retranslation of the entire program.

Although interpreters require more memory than compilers and take more time to execute the final code, they usually provide better real-time error diagnostics. However, microprocessor applications seldom require extensive programmer interaction or program debugging. As a result, a compiler generally is preferred over interpreters for time-critical microprocessor programming applications, and an interpreter is recommended for intensive interfacing or debugging requirements. Many microprocessor development systems provide both tools for overall programming flexibility.

Linkers tie together program segments and subroutines of machine code to form the finished program. Linkers calculate all module address locations so they will interface properly with one another and fit into memory.

Debuggers interactively execute and debug the object program by allowing the programmer to set breakpoints in the routine, control program execution, and examine processor register and memory content. Combined with in-circuit emulators, debuggers also allow control-line and memory-content transfer between host and prototype systems, thereby controlling the degree of emulation. Most debuggers include single-stepping and program-trace capability.

High-Level Languages

Using high-level languages (HLLs) simplifies program coding and debugging since a single statement can be translated by an interpreter or compiler into its equivalent of 20 or more assembly-language statements. Moreover, HLL statements resemble natural English and thus are easily read, documented and understood. The result is high overall programming efficiency.

Although highly convenient for a programmer, using an HLL imposes a penalty. All of the object code statements that the compiler generates for each HIL statement may not be required for every application. Consequently, high-level programs are typically 15 to 20% longer than efficient assembly-language programs. The result is wasted memory space and computer time.

However, the trends toward higher microprocessor speeds and lower memory cost tend to minimize these disadvantages, which are further offset by high programming efficiencies. Moreover, compilers based on so-called implementation languages have assembler-like characteristics, allowing programming in both high-level and assembly languages. Thus a programmer can use an HLL to design the overall program, resorting to assembly language for coding time or space-critical functions, or for coding functions that the HLL is not designed to execute.

High-level language is an increasingly fundamental consideration for selecting an MDS, the more sophisticated of which support several HLLs. In general, an HLL for microprocessor applications should have several characteristics. Foremost of these is block structuring which allows several design teams to work independently on program modules of a large project.

The language should also allow assembly-coded modules to be integrated into the basic program; provide data and register-bit handling capability such as shift and rotate; provide logical operations such as AND, OR, NAND and NOR; provide access to I/O ports and handle interrupts in real time. Also, since microprocessors are not well-suited for computation, they usually require languages that use integer arithmetic instead of floating point or decimal. Available HLLs provide these characteristics in various combinations and degrees of effectiveness.

WHAT'S NEW IN IC MASTER

DON'T MISS THE NEW DESIGN AUTOMATION IC SECTION

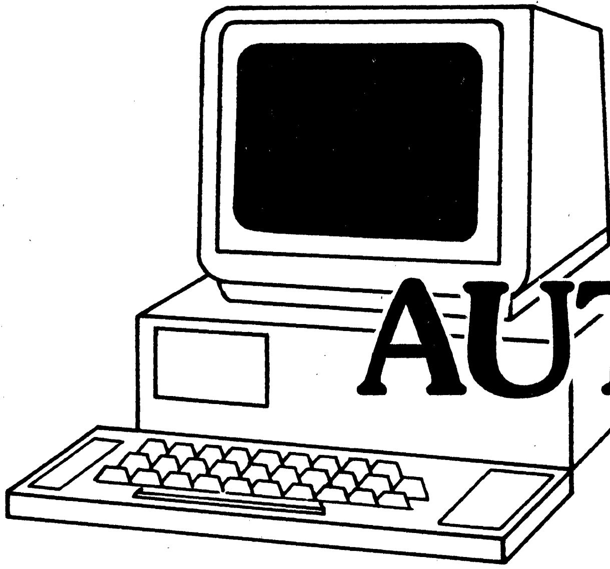

Quick and easy way to determine relationships between workstations, computers, software, semicustom manufacturers and CAE/CAD providers.

Volume II, page 4901

MPU DEVELOPMENT SYSTEMS

Supported CPUs	Maximum No. of Users Stations	Communication Ports		User RAM		Floppy Disk			Hard Disk	Logic Analyzer	PROM Programmer	Printer
		Serial	Parallel	Supplied (Kbytes)	Maximum Capacity (Kbytes)	No.	Size (in.)	Capacity (Kbytes)	Capacity (Kbytes)			
1802, 1805, 1806	1	1	8	16	192	2	5 1/4	800KB	33MB	x	x	x
Z80, Z80B, 8080, 8085, 6800, 6802, 6808, 6809, 6809E, 8035, 8039, 8040, 8048, 8059, 8050, 8748, 8749	1	1		64								
8035, 8039, 8040, 8048, 8050, 8748, 8749, 8080, 8085, Z80, MK3880/4, NSC-800	1	1		64	64							
Z8001, Z8002, Z8003, 68000	1	2		64						Opt.		
68000, 68008, 68010, 68020, Z8001, Z8002, Z8003, 8086, 8088, 80186, 80188	1	2		128	512					opt.		
WE32100	1	2		56						Opt.	Opt.	Opt.
8080	1	8		64		2		45				Opt.
8080	1	8		64		2		275				Opt.
Z80	1	1	24	64	128	2	5	1.5M	20		x	
6502	1	2		48		2	8				x	x
6502	1	2		48		2	5				x	x
8085	1	1	4	64		2	8	2M				
8086	1	1	3	128	16Mb	2	8	2M				
8085	1	1	4	64		1	8	1M	26M			
8086	1	1	3	128	16Mb	1	8	1M	26M			
8086	16	5	3	1Mb	16Mb	1	8	1M	52M			
4/40, 4/10, 4/30, 4/90, 4/95	8	16			64				300M		x	x
Z80/68000	6	Opt.			512	2	5 1/4	390			Opt.	Opt.
Z80/68000	6	Opt.			512	2	8				Opt.	Opt.
Z80	3	Opt.		512		2		390			Opt.	Opt.
Z80	6	Opt.			512	2	5 1/4				Opt.	Opt.

Software Support					
Standard	Optional	Comments	Model	Source	Line
Macro cross assembler, symbolic linker debugger	C-cross compiler	4K deep trace transparent	**EZ-PRO 2.1**	**AMA (1901)**	
	Remote control and symbolic debug package for ISIS and CP/M operating systems.	Stand-alone in-circuit emulator. Real time trace: 32 bits wide, 256 traces deep with disassembly. Diagnostic functions: standard and user-defined for debugging hardware in design, test and service.	EM-SERIES	AppMicroSys	
Stand-alone or hosted in-circuit emulator, real-time and transparent operation, diagnostic functions, in-line assembler, memory and trace disassembler, real-time trace 256x32 bits.	Remote control and symbolic debug package for MS/DOS, ISIS and CP/M operating systems.		EM Series	AppMicroSys	
		Stand-alone in-circuit emulator. Real time trace: 72 bits wide by 2048 deep.	ES-SERIES	AppMicroSys	
Stand-alone or hosted in-circuit emulator, real-time and transparent operation, diagnostic functions, in-line assembler, memory and trace disassembler, real-time trace 2048x72 bits.	Full high-level and symbolic debug packages available for various hosts (SUN, APOLLO, VAX (Unix), PC and MicroVAX.	Mainframe convertible to different microprocessor families by changing only board and pod.	ES Series	AppMicroSys	5
WE32150 development software program. I/O library and assembly-level debugger for host side support	Ferret high level language debugger, software support for logic analyzer 64000. Bux state analysis option, symbolic hardware debugging, disassembly of hardware bus traces.	Zero wait state emulation of CPU and MMU, display of CPU and MMU Registered. Disassembly of instructions stored in memory.	**WE321DS**	**AT&T (1603)**	
Enhanced Micro-Soft Basic	Analog and digital I/O boards.	Laboratory development system for process control and data acquisition.	CS450	Burr-Brown	
UCSD "p" system including Pascal and assembler	Analog and digital I/O boards.	Laboratory development system for process control and data acquisition.	CS460	Burr-Brown	
CP/M DOS, Editor, assembler, debugger	Macro assembler/linking loader BASIC interpreter, BASIC compiler, other high level languages available.	All circuit cards are STD BUS.	MS4000	Burr-Brown	
Editor, assembler.	Basic, Forth.	S100 mainframe readily convertible to Z80, 6802, 6809.	6502PDS-8'	CGRS	10
Editor, assembler.	Basic, Forth.	S100 mainframe readily convertible to Z80, 6802, 6809.	6502PDS-Mini	CGRS	
CP/M operating system	High-level languages	Programmable serial port, floating-point processor	Diskstor M-1	Comark	
MS-DOS, CP/M86 operating system	High-level languages	Programmable serial port, floating-point processor	Disktor M-2	Comark	
CP/M operating system	High-level languages	Programmable serial port, floating-point processor	Disktor M-3	Comark	
MS-DOS, CP/M86 operating system	High-level languages	Programmable serial port, floating-point processor	Disktor M-4	Comark	15
MP/M86 operating system	High-level languages	Programmable serial port, floating-point processor	Disktor M-5	Comark	
RTX, 0S4, operating system, Fortran, Cobol, Pascal, BCPL, Coral 66.			410,30,90	CompAuto	
	CDOS or CROMIX operating system, macroassembler, "C" compiler, Cobol, Fortran 77, Pascal, Structured Basic.		CS-105E	Cromemco	
	CDOS or CROMIX operating system, macroassembler, "C" compiler, Cobol, Fortran 77, Pascal, Structured Basic.		CS-3D5E	Cromemco	
	CDOS or CROMIX operating system, macroassembler, Cobol, Fortran, Lisp, Structured Basic, Ratfor, data base management, Writemaster, Spellmaster, Planmaster, "C" compiler.	Capable of high-resolution graphics using SDI graphics interface and RGB monitor.	System One	Cromemco	20
	CDOS or CROMIX operating system, macroassembler, Cobol, Fortran, Lisp, Structured Basic, Ratfor, data base management, Writemaster, Spellmaster, Planmaster, "C" compiler.	Capable of high-resolution graphics using SDI graphics interface and RGB monitor.	Z-2H	Cromemco	

Bold face indicates additional data is provided on the page noted.

MPU DEVELOPMENT SYSTEMS (Cont'd)

Supported CPUs	Maximum No. of Users Stations	Communication Ports		User RAM		Floppy Disk			Hard Disk	Logic Analyzer	PROM Programmer	Printer
		Serial	Parallel	Supplied (Kbytes)	Maximum Capacity (Kbytes)	No.	Size (in.)	Capacity (Kbytes)	Capacity (Kbytes)			
Z80	6	Opt.			512	2	5 1/4				Opt.	Opt.
Z80	6	Opt.			512	2	8				Opt.	Opt.
Z80, 8080	1	1-36		64		2	5 1/4	328				
8080	1	2		256		1		2M			x	x
8080	1	3		1Mb		1		2M			x	x
1802		2		16		2					Opt.	Opt.
68000, 68010, 8086, 8088, 8085, Z80A, Z80B, NSC800, 6809, 6502, 8048 family	1	2		128		2	8		40M	x	x	
68000, 68010, 8086, 8088, 8085, Z80A, Z80B, NSC800, 6809, 6502, 8048 family	15	1		128						x	x	
68000, 68010, 8086, 8088, 8085, Z80A, Z80B, NSC800, 6809, 6502, 8048 family	60	4								x	x	
XR3870, XR3872 and F8, F3876, F3878	1	2		2	4						x	
F8, F3870, F6800, F9445, F16,000	1	2		128		2		1M			Opt.	Opt.
F3, F3870 family	1			16		2					Opt.	Opt.
9440, 9445	1	1		64		2	1 1/4					150
6802, 6808 or 6809	1	2	1	8								
G65SCXXX	1	1	1	32	128							
68000	16	12	1M									
6800, 6801, 6802, 6803, 6805, 6805P, 6805R, 6805U, 146805E2, 146805G2, 6808, 6809, 6809E, 68000, 68008, 68010, 68020	6/cluster 16/Host computer	2 (4 programmable)	1	System Memory 96Kbyte	876Kbyte	2	5.25	240Kbyte	132M	See comments	opt.	opt.
6801, 68701	1	1		6								

Software Support		Comments	Model	Source	Line
Standard	Optional				
	CDOS or CROMIX operating system, macroassembler, Cobol, Fortran, Lisp, Structured Basic, Ratfor, data base management, Writemaster, Spellmaster, Planmaster, "C" compiler.	Capable of high-resolution graphics using SDI graphics interface and RGB monitor.	Z80 System 2	Cromemco	
	CDOS or CROMIX operating system, macroassembler, Cobol, Fortran, Lisp, Structured Basic, Ratfor, data base management, Writemaster, Spellmaster, Planmaster, "C" compiler.	Capable of high-resolution graphics using SDI graphics interface and RGB monitor.	Z80 System 3	Cromemco	
CPM operating system and macroassembler.	CyberForth Program Development Package with built-in drivers for I/O and communications boards; real-time, multitasking executive; floating point match module; cross compiler; tracer/debugger and structured assembler.	The CYKEY9990 has a 24 slot card cage that will accept any of over 40 Cyberbus digital I/O, analog I/O and communications boards.	CYKEY9990	Cybersys	
CPM/80, complete disk operating system with editor, assembler, debugger and utilities.	Fortran, Pascal, Basic, PL/I, "C", Cobol, PLMX; Cross-assemblers for all 8-bit microprocessors; multi-tasking operating system.	Hardware options include 1/2-inch magnetic tape, Winchester drive, in-circuit emulation, cassette tape, modem.	DCS/80	DistComp	
Complete disk operating system with editor, assembler, debugger and utilities.	High-level language, Fortran, Cobol, Pascal, Basic, PL/I Cross-assemblers for all 8-bit microprocessors; multi-user, multi-tasking operating system.	Hardware options include 1/2-inch magnetic tape, Winchester drive, in-circuit emulation, cassette tape, modem.	DCS/86	DistComp	5
MicroForth compiler, disk operating system, macroassembler, interactive debug, emulation string and line editor.		Self diagnostics, in-circuit emulator.	EICOMPuMOS	DiversTech	
RT-11 operating system, macro-relocatable cross-assemblers, linker, symbolic debugger, screen-oriented editor, HELP files.	PASCAL and "C" cross-compilers for most processors. All standard DEC software options.	In-circuit emulation of all chips supported. Real-time trace captures all bus activity.	ECL3211	Emulogic	
RT-11 Operating system, macro-relocatable cross-assemblers, linker, symbolic debugger, screen-oriented editor, HELP files.	PASCAL and "C" cross-compilers for most processors. All standard DEC software options.	Multi-user system based on DEC PDP-11 family of host processors. Supports multiple ECL-3211 satellite software/hardware stations as well as standard VT100 software-only stations on host.	EMUNET-1	Emulogic	
RT-11 Operating system, macro-relocatable cross-assemblers, linker, symbolic debugger, screen-oriented editor, HELP files.	PASCAL and "C" cross-compilers for most processors.	Multi-user system based on DEC VAX-11/730, 11/750, and 11/780 host processors. Supports multiple ECL-3211 satellite software/hardware stations as well as standard VT100 software-only stations on host.	EMUNET-2	Emulogic	
2K byte firmware monitor	F8/3870 cross assembler, MSDOS/PCDOS	Full in-circuit emulation of XR3870, XR3872 and F8, programming sockets for XR38E70, and 2716 EPROMs, 4K RAM, 6K EPROM socket space.	XR-38XX	Exar	10
IMDOS multi-user disk operating system and Basic language packages.	Fortran, Pascal, Crossassemblers, PEPLINK, loaders, debugger, and EMUTRAC, control software for F8, F3870, F6800 and F16000 families.	Optional Real-Time Executive Operating System for multitasking in F9445-based systems. Optional video terminal, peripheral controller boards and I/O boards.	FS-1	Fairchild	
Assembler, editor, debug package.		Options: In-circuit emulator, PROM boards, communications boards, floppy disc interface.	Formulator Mark III	Fairchild	
Multitasking time-share oriented disc operating system; macroassembler, test editor, utilities, debuggers; real-time executive.		Peripherals purchased from independent vendors.	Microflame 1	Fairchild	
ROM-based debugging monitor with utility routines and friendly prompts.		Six 8-bit parallel I/O ports with control signals. 50 thru 19.2K bps, independentally selectable, serial ports. 16 memory map configurations, switch selectable. Six sockets for ROM/PROM 2K, 4K or 8K types. Requires serial display terminal and 5V power. Asynchronous multibus compatible.	PEP-68	Fairchild	
Resident line assembler	Optional Personality boards	Connects to host via RS232	GEM-1	GTEMicro	15
UNIX, CP/M68	Fortran, Pascal, Cobol, Basic	Single-board UNIX System.	MINIBOX	Heurikon	
Operating software supplied with each subsystem.	C, Pascal, Assemblers, Linkers, PL/M available for 8086.	Logic Development System: 200/400MHz Timing/125MHz state 8 to 32 channels	HP64000	HP	
Mnemonic debugger with on-line assembly, and EPROM programming support.	Macro-assemblers, linker, emulation package.	Software development and test station for 6801 programs. Programs UV EPROM version of 6801.	6801VICE	HiLevel	

Bold face indicates additional data is provided on the page noted.

MPU DEVELOPMENT SYSTEMS (Cont'd)

Supported CPUs	Maximum No. of Users Stations	Communication Ports Serial	Communication Ports Parallel	User RAM Supplied (Kbytes)	User RAM Maximum Capacity (Kbytes)	Floppy Disk No.	Floppy Disk Size (In.)	Floppy Disk Capacity (Kbytes)	Hard Disk Capacity (Kbytes)	Logic Analyzer	PROM Programmer	Printer
F9445 to clock speed of 24 MHz, 49-pin or chip-carrier probe, for 9445 socket	1	3	1		64							
CP1600/A, 1610, 60-pin probe for 1610 socket, runs full speed	1	3	1		64							
All bit slices, 2901, 2903, 29203, 29501, 29116, 8X300, 8X305, 74S481, 3000, and Macrologic. Also ECL10800, 100220. 1 to 4 WCS arrays.	1	3	1	1	64							
All bit slices, 2901, 2903, 29203, 29501, 29116, 8X300, 8X305, 74S481, 3000, and macrologic. Also ECL10800, 10220. 1 to 4 WCS arrays.	4	3	1	512	160	2	5 1/4	2M		x	x	x
All bit slices, 2901, 2903, 29203, 29501, 29116, 8X300, 8X305, 74S481, 3000, and macrologic. Also ECL10800, 10220. 1 to 4 WCS arrays.	4	3	1	64	256	2	5 1/4	700K	10M	x	x	x
All bit slices, 2901, 2903, 29203, 29501, 29116, 8X300, 8X305, 74S481, 3000, and Macrologic. Also ECL10800, 100220. 1 to 4 WCS arrays.	1	4				21	5 1/4					
HY65C02, HY65C816, HY65C00/1, HY6500/11	1	1		16						x		
IMST414												
IMST414												
Work station dependent	8	1	2	256		2						Opt.
8080A, 8085A, 8086 (iAPX86), 8088 (iAPX88), 8089, 8021, 8022, 8041A, 8741A, 8035, 8048, 8748, 8039, 8049, 8051	1	2	4		64			250	7.3M		Opt.	
8080A, 8085A, 8086 (iAPX86), 8088 (iAPX88), 8089, 8021, 8022, 8041A, 8741A, 8035, 8048, 8748, 8039, 8049, 8051	1	2	4			1		250			Opt.	Opt.
8080A, 8085A, 8086 (iAPX86), 8088 (iAPX88), 8089, 8021, 8022, 8041A, 8741A, 8035, 8048, 8748, 8039, 8049, 8051	8	2	4								Opt.	Opt.
MCS-86, MCS-85, MCS-80 and MCS-48 families	1				64			250			Opt.	Opt.
8080, 8085, 8088, 8048, 8051, all 8-bit Intel microprocessors or microcontrollers	1	2			64						Opt.	
8086, 8087, 8088, 8085, 8080, 68000, 6809, 6809E, 6802, 6502, 6507, Z8002, Z8002, Z80B, NSC-800, 6510, 65C02, 80C85, 68008, 80C86, 68010, 80186	8	2	1	64		2						Opt.
8086, 8087, 8088, 8085, 8080, 68000, 6809, 6809E, 6502, 6507, Z80B, Z8001, Z8002, NSC-800, 80186, 6510, 65C02, 65802, 80C85, 80C87, 80188, 68008, 68010	8	4	1	256		2						Opt.
TMS320, TMS32010, 80286, 68008, 6301/3, 8031/51, 8048/49, 8035/39, 68000, 68010, 8086, 80C86, 8086/7/8, 80186, Z8001, Z8002, 6502 family, 65C02, 6510, 6809, 6809E, 8080, 8085, 80C85, 8088, 80188, NSC800, Z80.	1	3	x	256	1MB	2	5 1/4	640	10	x	x	x

Software Support					
Standard	Optional	Comments	Model	Source	Line
Same as Model DS270. Breakpoints can be from data on the TRACE probes, or address.	Same as Model DS270. Downloads from Fairchild cross-assemblers.	Converts to DS270 figuration by changing cables, adding any needed WCS memory. Basic DP9445 has all DS270 specs except WCS width.	DP9445	HiLevel	
Same as Model DS270. Model programs for host to download, run, get TRACE upload as feedback.	Same as Model DS270. Downloads from General Instrument cross-assembler.	Converts to full DS270 or DP9445 by changing cables, adding any needed WCS memory. Basic DP1610 has all DS270 specs except WCS width.	DS1610	HiLevel	
MENU Prompts: Editing, Target Control, Remote operation, Display formatter, Diagnostics, Download models, TRACE dump, Multiple arrays.	Universal meta-assembler for up to 128-bit words, full cross-references, MACRO's, Fortran IV compativle, or CP/M version.	Menus and prompts, histogram or WCS address frequency. Compatible with any assembler, BSO, TMI, MICROTEC. Trace has nesting and data break, search and dump, 8192 breakpoints.	DS270	HiLevel	
MENU Prompts: Editing, Target Control, Remote operation, display formatter, diagnostics, download models, TRACE dump, multiple arrays.	Universal meta-assembler up to 80 bits, MACRO's FORTRAN IV compatible or CP/M version.	Performance analysis measures target activity in 16 user categories. TRACE has 16-level Trigger logic.	DS370	HiLevel	
UNIX time-sharing operating system, PASCAL, Fortran, "C", editor, debugger, word processor, utilities. Built-in diagnostic tests plus DS370 features.	Upgrade of DS270. Adds ability to do fast assemblies on built-in host.	Same as DS270.	DS470	HiLevel	5
UNIX time-sharing op system, Pascal, Fortran, "C", Editor, Debugger, Word Processor, utilities. Built-in diagnostic tests, plus OS370 features.	Upgrade of DS370. Adds the ability to do fast assemblies on the built-in 68000 host. Multi-user up to 4.	Performance analysis, measures target activity in 16 user categories. TRACE has 16-level trigger logic. Superset of DS370 in all ways. CRT menus have help feature.	**DS570**	**HiLevel (1902)**	
Host driver	Cross assembler	In-circuit emulator for Hyundai MPU and MCP	HMDS-1	Hyundai	
Stride 440		Cross-Software Package	**IMSD100**	**Inmos (1903)**	
VAX-VMS		Cross-Software Package	**IMSD600**	**Inmos (1903)**	
High level language debugging network, management tools, export/import software, Ethernet Protocall.		Network resource manager provides shared Winchester hard disc, Model 740 cartridge disks and spooled line printer interface for work stations. All existing Intel development systems can be upgraded to be NDS-II work stations. Work stations communicate with the network resource manager via 10M bit Ethernet or local net interconnected with coax.	NDS-II	Intech	10
ISIS 11 disk operating system; ASM-80 macroassembler for 8080, 8085; credit editor; link and locate utilities.	PL/M-80, Fortran, Pascal, Basic, Cobol, Utilities FSP arithmetic package for 8080 and 8085; AMS-86 macroassembler, PL/M-86, link and locate utilities for 8086; assemblers for 8048 and 8089.	In-circuit emulators for all CPUs.	INTELLEC11-MODEL245	Intel	
ISIS operating system, credit full screen copier, macroassembler for 8086/88 and 8080/85, linker and loader, debug-86 debugger.	Pascal, Fortran, PL/M, Cobol, Basic, assemblers for 8089, 8048, 8051 families, utility packages for 8080/85/86/87/88/89 support mainframe link software.		IntellecIII	Intel	
ISIS operating system at workstations, MDS-I operating system at network manager.		Network manager provides shared hard disk and printer spooling for use by up to 8 stations.	NDS-I	Intel	
ISIS-11 disk operating system with relocating macroassembler, linker, locater, and CRT-based CREDIT editor.	IPDS-FTRANS option enables file transfer between iPDS and any Intellec Development System. PL/M, Fortran, Basic, Pascal and Cobol software packages available.	Self-test diagnostic capability, built-in interfaces for high-speed paper tape reader/punch, printer and universal PROM programmer. iMDX557, iAPX resident processor card package is available to upgrade existing iMDX225 series II Development System to Series III. This package supports development of iAPX86/88 processors.	iMDX225	Intel	
ISIS-PDS disk operating system with relocating macroassembler, and CRT-based editor.	CP/M operating system on disc. Fortran/80, PL/M80, PL/M88/86 and Basic. Multiprocessor emulator functions.	Portable, dual processing capability, expandable using multimodule cards. Bubble memory option.	iPDS	Intel	5
UDOS operating system, editor, macro assemblers emulation support, mainframe link.	Basic, Pascal compilers for development.	Simultaneous multi-position emulation.	2300	Kontron	
CP/M operating system, macro assembler, editor linker, emulation support, mainframe link.	Pascal for system programming; PASCAL compiler for development; 3rd party CP/M software. (Basic, Fortran, C)	Ergonomic terminal, distributed computing and central mass storage for multi-users, multi-processor emulation.	KDS	Kontron	
CP/M O.S., editor macro-assemblers, linker development libraries, utilities	Pascal-compilers, C-compilers third party CP/M software	Development Station	KDS-908-04	Kontron	

MPU DEVELOPMENT SYSTEMS (Cont'd)

Supported CPUs	Maximum No. of Users Stations	Communication Ports		User RAM		Floppy Disk			Hard Disk	Logic Analyzer	PROM Programmer	Printer
		Serial	Parallel	Supplied (Kbytes)	Maximum Capacity (Kbytes)	No.	Size (in.)	Capacity (Kbytes)	Capacity (Kbytes)			
8080, 8085, 8086, 8087, 8088, 80186, 80188, 6809, 6809E, 68000, 68008, 68010, Z8001, Z8002, NSC-800, 65XX, 16032	4	2	1	1000		2	5 1/4	1.2M	40	x	x	x
TMS320, TMS32010, 80286, 68008, 6301/3, 8031/51, 8048/49, 8035/39, 68000, 68010, 8086, 80C86, 8086/7/8, 80186, Z8001, Z8002, 6502 family, 65C02, 6510, 6809, 6809E, 8080, 8085, 80C85, 8088, 80188, NSC800, Z80.	12+	7	2	1MB	2MB	3	5¼	640	260	x	x	x
8080, 8085, 8086, 8087, 8088, 80186, 80188, 6809, 6809E, 68000, 68008, 68010, Z8001, Z8002, NSC-800, 65XX, 16032	8	2	1	256		2	5 1/4	1.2M	10	x	x	x
TMS320, TMS32010, 80286, 68008, 6301/3, 8031/51, 8048/49, 8035/39, 68000, 68010, 8086, 80C86, 8086/7/8, 80186, Z8001, Z8002, 6502 family, 65C02, 6510, 6809, 6809E, 8080, 8085, 80C85, 8088, 80188, NSC800, Z80.	1	5	x	256	1MB	2	5 1/4	640	10	x	x	x
8080, 8085, Z80, 6809, 6809E, 6502 series 8084, 8086, 68000, Z8001, Z8002	8	4		256		2	5 1/4					Opt.
TMS320, TMS32010, 80286, 68008, 6301/3, 8031/51, 8048/49, 8035/39, 68000, 68010, 8086, 80C86, 8086/7/8, 80186, Z8001, Z8002, 6502 family, 65C02, 6510, 6809, 6809E, 8080, 8085, 80C85, 8088, 80188, NSC800, Z80.	1	3	x	256	1MB	2	5 1/4	640	10	x	x	x
TMS320, TMS32010, 80286, 68008, 6301/3, 8031/51, 8048/49, 8035/39, 68000, 68010, 8086, 80C86, 8086/7/8, 80186, Z8001, Z8002, 6502 family, 65C02, 6510, 6809, 6809E, 8080, 8085, 80C85, 8088, 80188, NSC800, Z80.	1	2	x	256	640	2	5 1/4	640	10	x	x	x
TMS320, TMS32010, 80286, 68008, 6301/3, 8031/51, 8048/49, 8035/39, 68000, 68010, 8086, 80C86, 8086/7/8, 80186, Z8001, Z8002, 6502 family, 65C02, 6510, 6809, 6809E, 8080, 8085, 80C85, 8088, 80188, NSC800, Z80.	1	3	x	256	640	2	5 1/4	640	10	x	x	x
TMS320, TMS32010, 80286, 68008, 6301/3, 8031/51, 8048/49, 8035/39, 68000, 68010, 8086, 80C86, 8086/7/8, 80186, Z8001, Z8002, 6502 family, 65C02, 6510, 6809, 6809E, 8080, 8085, 80C85, 8088, 80188, NSC800, Z80.	1	3	x	512	3MB	2	5 1/4	1.2MB	30	x	x	x
6809	6	6		64	128	2	3	2Mb	10Mb		x	
6809	6	6		64	128	2	5	2Mb	10Mb		x	
6809	6	6		64	128	2	8	2Mb	10Mb		x	
MIL-STD-1750A	4	1	0	128	2Mb	2	8	400/800	40Mb			x
8089, Z80	1	2		64		2	8					x
8080, Z80	1	5	1	80		2	8					x
Z80	1	2		64	64	2	8	480K				
Z80, Z80B, 80186	1	2	1	512	1Mb	2	3.5	814K				
6800 or 6809. Opt. 6801, 6802, 6805, 146805, 3870, 141000	1	1	2	64							Opt.	
M6800, M6801, M6805, M6809. Optional hardware for M6805/M146805 families	1	1		56				328			Opt.	Opt.
M6805, M146805, M6804	1	1	1	8								

Bold face indicates additional data is provided on the page noted.

Software Support				
Standard	**Optional**	**Comments**	**Model**	**Source**
UNIX, assemblers, "C" linear, emulator	PASCAL, Fortran	Runs CP/M as task under UNIX	KDS-968	Kontron
UNIX V7, SCCS, csh, make, lint, 200 UNIX utilities, CP/M, CP/NET.	C cross-compilers, PASCAL cross assemblers, third party UNIX and CP/M Software Ethernet to VAX, IBM PCs.	UNIX System	KDS-968-07	Kontron
CP/M, editor, assembler, linear, emulator	PASCAL		KDS-980	Kontron
CP/M O.S., editor macro-assemblers, linker development libraries, utilities	Pascal-compilers, C-compilers, third party CP/M software	Development Station with separate monitor, 5 RS232 GPIB ports	KDS-980-02	Kontron
CP/M operating system, editor utilities (MP/M, CP/Net for multiuser).	Pascal Compilers, Cross assemblers, symbolic debug for emulators.		KOS-980	Kontron
CP/M O.S., editor macro-assemblers, linker development libraries, utilities	Pascal-Compilers, C-Compilers, third party CP/M software	Portable Development System	KPDS	Kontron
DOS O.S., Macro-assemblers, linker, utilities, slave emulator/slave analyzer softwares	C cross-compilers, PASCAL cross assemblers, third party DOS software	Works with users IBM PCXT or AT	KPI/KSE/KSA	Kontron
DOS O.S., Macro-assemblers, linker, utilities, slave emulator/slave analyzer softwares	C cross-compilers, PASCAL cross assemblers, third party DOS software	IBM PCXT-based development system	KPS-100	Kontron
DOS O.S., Macro-assemblers, linker, utilities, slave emulator/slave analyzer softwares	C cross-compilers, PASCAL cross assemblers, third party DOS software	IBM PCAT-based development system	KPS-200	Kontron
FLEX and OS9	"C", Forth, Basic		RLK3	Matrix
FLEX and OS9	"C", Forth, Basic		RLK5	Matrix
FLEX and OS9	"C", Forth, Basic		RLK8	Matrix
MMMON resident monitor/executive	VRTX/1750 Executive	MIL-STD-1750A software development system	MKS1750/C	Mikros
CP/M 2.2	XY Basic, Microsoft Basic, Pascal/M, Z-SID, MAC, 32 or floating point APU. Any CP/M compatible.	Includes power supply, 7-slot multibus chassis, MSC-8009A Z80 CPU, 64K byte RAM, up to 32K EPROM, floppy disk controller, two Shugart 801R disk drives.	MSC8801	MonSys
CP/M 2.2	CP/NET, MP/M, XY Basic, Microsoft Basic, Pascal/M, Z-SID, MAC, 32 or 64 floating point APU, 8-inch Winchester drive package. Any CP.M comp	Includes power supply, 7-slot multibus chassis, up to 32K EPROM, floppy disk controller, two Shugart 801R disk drives. MSC-8009, Z80 CPU, 16K RAM; MSC8007A, Z80 CPU, 64K RAM.	MSC8802	MonSys
CP/M80 operating system		Fifteen-slot Multibus	MSC8806	MonSys
CP/M80, Concurrent CP/M86-IRMX86 Operating System		Six-slot portable Multibus	MSC8807	MonSys
MDOS disk operating system, macroassembler with linking and loading editor, cross-assemblers, cross-simulators available for each MPU.	Fortran, Cobol, Basic, MPL, Pascal.	Optional real-time trace. EXORterm 155 adds video display and keyboard entry capabilities to the basic EXORciser. Centronix 702, 703.	EXORciserII	Motorola
XDOS operating system, linking loader, CRTeditor, Basic-M, compiler/interpreter, Basic-M run-time package, disk resident.	Pascal, Setcom (serial communications).	EXORset fills the gap existing between very low-cost evaluation kits and high-end EXORciser-based systems.	EXORsetDS35	Motorola
			EXORsetDs35	Motorola
In host.		Operates as a remote hardware/software development station to a host such as EXORmacs, VME/10.	**HDS-200**	**Motorola (1904)**

Bold face indicates additional data is provided on the page noted.

MPU DEVELOPMENT SYSTEMS (Cont'd)

Supported CPUs	Maximum No. of Users Stations	Communication Ports		User RAM		Floppy Disk			Hard Disk	Logic Analyzer	PROM Programmer	Printer
		Serial	Parallel	Supplied (Kbytes)	Maximum Capacity (Kbytes)	No.	Size (in.)	Capacity (Kbytes)	Capacity (Kbytes)			
MC68000	1	1	1	32	256							
MC68HC11, MC6809, MC6801, MC6803, MC68010	1	2	2	32	256	1	5 1/4	655		1		opt.
MC68000, 68010, 6800, 6809, 6802, 6805, 146805, 6801, 68120	2	2		256						Opt.	Opt.	Opt.
MC68HC11, MC6809, MC6801, MC6803, MC68000, MC68008, MC68010, MC68020, MC6804, MC6805, MC68120	3	opt.	opt.	384	16	1	5 1/4	655	40Mb	opt.	opt.	opt.
COP400 Series, NS455	1	3										Opt.
8080, 8085, 8048, 3049, 3050, 3070, Z8	1			64		2		512			Opt.	
NSC800, INS8070, INS8048, INS80C48, 8080, 8085, Z80, COP400	1	2		128		2					Opt.	Opt.
μPD70108, μPD70116 (V20/V30)		2	1	320	610	1	8	1M				
μPD70108, μPD70116 (V20/V30)		2	1	320	610	1	8	1M				
μPD70108, μPD70116 (V20/V30)	5	10	2	512	1MB	2	8	1M	32M			
68000		2	2	128		1						
10 MHz 68000	32	6	3	128	512	1	8	1.2Mb	80Mb			
12.5 MHZ 68000, 10 MHz 68000, 8 MHz 68000, 10 MHz 68010, 12.5 MHz 68010	32	8	2	512	2Mb	1	8	1.6Mb	500Mb			
1802/4/5/6, 6301/3, 6500/02/C02, 6800/2/8, 6801/3, 6805, 6809E, 68000/008/010/020, 68HC11, 8048/35/39/40/49/50, 8051/31/32/52/C51, 8085/80, 8086/186/286, 8088/188, 8096, Z8, Z80, Z8000, Super8, NSC-800, HD64180	1	2	1	256	640	2	5- 1/4	360 K	20 MB	x	x	Opt.
Z80-A	1	3	1	64		2	5 1/4	400			x	Opt.
Z80, NMOS		3	8	16	65	2		512		Opt.	x	x
1802, 1804	1	1		60		2		512		Opt.	x	x
1802, 1804, 1805, 1806, 6805C	1	1		4	40	1				Opt.	Opt.	x
1802, 1804, 1805, 1806, 6805C	1	1		4		2				Opt.	x	x
1802	1	1		4	32	2				Opt.	x	
1802, 1804, 1805, 1806, 6805C, 6800, 6801/02/03/08/09	1	1		60		2	3 1/2	736		Opt.	Opt.	x

Software Support					
Standard	**Optional**	**Comments**	**Model**	**Source**	**Line**
In host.		Operates as a remote hardware/software development station to a host such as EXORmacs, VME/10.	**HDS-400**	**Motorola** (1905)	
In host.		Operates as a hardware/software development station.	HDS300	Motorola	
VERSAdos multiasking, real-time, multiuser, logical I/O file management; Pascal compiler; macro and linking assembler; page, screen and file-oriented editor, symbolic debugger.	Fortran IV.	Optional real-time trace; ROM, RAM and disk autotest at power-on; board-level fault isolation.	M68000 (EXORmacs)	Motorola	
VERSAdos real-time operating system.	UNIX System V/68 operating system, Pascal, Fortran, "C"		VME/10	Motorola	
In host CPU		Microcontroller On Line Emulator; consists of a host CPU, a MOLE Brain Board, and a MOLE Personality board.	MOLE	National	5
Disk operating system; Fortran compiler; Basic interpreter; on-board ROM diagnostics, utilities.	Text editor, cross-assemblers.	Optional in-circuit emulators for 8048, Z80; personality modules; Starplex-to-Intel MDS link.	STARPLEX	National	
Disk-based operating system, debugger, text editor, assembler, linker, Fortran, Basic, utilities and diagnostics.	PL/M, Pascal.	Starplex II support packages are identical to those of Starplex.	STARPLEXII	National	
	Assembler, C	In-Circuit emulator operational on DEC VAX, Intel Series III and IBM PC.	IE-70108-5	NEC	
	Assembler, C	In-Circuit emulator operational on DEC VAX, Intel Series III and IBM PC.	IE-70116-5	NEC	
MP/M-86	Assembler, C		MD-086FD-10	NEC	10
OB68KMACS (MACSBUG monitor debugger).		Whitesmiths-Idris Forth, Inc-Poly Forth 32, Hemenway-MSP.	OB68K/SYS	Omnibyte	
Idris 2.3—a Unix-like O/S with real-time enhancements, poly-FORTH 32, real-time, multiuser, compact O/S.	Absoft's Fortran 77, JMI's C-Exec, and a 68000 assembler from OASYS all run under Idris.	Has streaming tape capabilities.	OB68K/SYS+	Omnibyte	
Idris 2.3—a Unix-like O/S with real-time enhancements, poly-FORTH 32, real-time, multiuser, compact O/S.	Absoft's Fortran 77, JMI's C-Exec, and a 68000 assembler from OASYS all run under Idris.	Intelligent Diagnost Front Panel monitors current, voltage, temp., 100MB streaming tape.	OB68K/SYSII	Omnibyte	
Integrated software controls Analyzer, Emulator, Stimulus Generator, and PROM Promgrammer, from a single context, has access to MS-DOS programs.	Histogram/Performance Measurement, MS-DOS high-level languages and cross assemblers.	Universal 8/16 Bit Emulator supports 46 processors. Integrated 48-channel bus-state analyzer.	UDL	Orion	
CP/M 2.2 disk operating system with Quay utilities.	5/8 converter cable for 8' drive IBM 3740 format compatibility. Number of Developmental and Applications software packages available.	Packaged system with CRT/terminal included.	500T	Quay	15
Monitor; including display & alter memory contents, dynamic breakpoints with register dumps, program countertracts single stepper and PROM programming.	Basic, Cobol, Fortran, CP/M operating system, assembler, text editor.		99/94FMWS	Quay	
Disk operating system, Level I and Level II, Macroassembler, Full Screen Editor.	Basic 1—Fixed Point Interpreter/Compiler Basic 2—Floating Point Interpreter PLM compiler.		CDP18S008	RCA	
System monitor and floating point Basic interpreter firmware.	System expandable in memory and I/O using any CDP18600 series microboard. Optional 1802, 1804, 6805C ROM-based Assemblers.		CDP18S693	RCA	
System monitor, floating point Basic interpreter, 1802 assembler/text editor firmware. Cassette based PROM programmer software.	Same as CDP18S693.		CDP18S694	RCA	
ROM-Based Floating Point Basic interpreter, Level I 1802 assembler, text editor, System utility ROM, PROM Programmer Software (Cassette).	Video interface System (Interpreter Cassette).	System includes 10' color monitor and keyboard. System software display is color-coded. System is expandable using RCA Microboards.	CDP18S695	RCA	20
Microdos operating system, macroassembler, utilities, 1800 series assemblers.	Full-screen editor; 6805C Assembler; Basic 1 fixed point interpreter/compiler; Basic 2 floating point interpreter; PLM 1800 compiler; micro concurrent Pascal compiler/interpreter (cross-software).	Microemulator, real-time in-circuit emulator, supports emulation of 1802, 1804, 1805, 1806, 6805C and future 8/16 bit micros. Requires user provided terminal or above microemulator.	MS2000	RCA	

Bold face indicates additional data is provided on the page noted.

MPU DEVELOPMENT SYSTEMS (Cont'd)

Supported CPUs	Maximum No. of Users Stations	Communication Ports		User RAM		Floppy Disk			Hard Disk	Logic Analyzer	PROM Programmer	Printer
		Serial	Parallel	Supplied (Kbytes)	Maximum Capacity (Kbytes)	No.	Size (in.)	Capacity (Kbytes)	Capacity (Kbytes)			
Z80	1	1	1	64		2	3 1/2	645		Opt.	Opt.	
Z80A, B, C, L; NSC800, 80C85, Z80C and 808T In-Circuit Emulators	1	4	2		256						Opt.	Opt.
Z80A, B, C, L; NSC800, 80C85, Z80C, 8085	1	2			256						Opt.	Opt.
Add-on In-Circuit Emulator for Intel development systems.	x				x			x	x			
6500 family.	1	2		16		2					Opt.	x
R6502, R65C02, R6512, R6500/1, R65C102, R65C112, A6500/11 family, R6500/41 family	1	1	8	64	65	2	5 1/4	1.3M				
R6502, R6512, R6500/1, R6500/11, R6500/12, R6500/13	1	2		16	56	2	5 1/4				x	
6802	1	2	1	61.5		2	8				Opt.	
6809	1	2	1			2	8					
68000	1	2		256		1	5 1/4					
8086, 8085A, 8080A, 8048, 8049, 8035, 8039, 8021, 8041A, 8022, 6800, 68000, 6802, 6808, Z8000, Z80A	1	2		128						Opt.	Opt.	Opt.
8086, 8085A, 8080A, 8048, 8049, 8035, 8039, 8021, 8041A, 8022, 6800, 68000, 6802, 6808, F8, 3870, 3872, 3874, 3876, Z8001, Z8002, Z80A, TMS9900, SBP9900, 1802, 6500/1	1	2		128		2				Opt.	Opt.	Opt.
68000, 68008, 68010, 6809, 6809E, 6801	8	8		64-128	768	1	8	8	80MB	opt.	opt.	opt.
68000, 68008, 68010, 6809, 6809E, 6801	1	2		64-128	768					opt.	opt.	opt.
TMS7xxx, TMS7xCxx		2									y	
TI32032T	1	x		256	256	1	5-1/4	360	10M			x
TI32032T	1	x		256	256	1	5-1/4	360	10M			x
TMS320, TMS7000					64K							
TMS320, TMS7000					64K							
TLCS-42	1	2	1	8	8	2	8	1M			x	x
TLCS-47	1	2	1	8	8	2	8	1M			x	x
TLCS-47	1	2	1	8	8	2	8	1M			x	x
TMP8048/35/49/39, TMP80C48/35/49/39/50/40	1	2	1	8	8	2	8	1M			x	x
TMP8048/35/49/39, TMP80C48/35/49/39/50/40	1	2	1	8	8	2	8	1M			x	x
TMPZ84C00, Z80	1	2	1	64	64	2	8	1M			x	x
8048, 8086/8088/8087, 68000/68010, 68008, 6809/6809E, Z80/Z80B/Z80H, 8085, 80186/80188, V20/V30	8	2		64/128	16MB						8048	opt.

Software Support					
Standard	Optional	Comments	Model	Source	Line
TPM operating system (CP/M 2.2 compatible) Z-80 Macroassembler lingage editor, Debugger, monitor, Firmware.	Basic, micro-concurrent, Pascal.		MS2000-Z	RCA	
ROS operating system, self-test, file management, utilties, editor, assembler, linker, locator and communications link.	Relocatable assemblers	Universal development station, hardware/software, emulator/development system. Ports: (4) RS232C, GPIB, Centronics; Portable	IceboxA	RELMS	
ROS operating system, self-test, file management, utilities	Relocatable assemblers, editor, linker, locator	Ports: (2) RS232C, Centronics. Communications links available for VAX, Intel and CP/M systems. Portable, universal.	IceboxT	RELMS	
Relocatable Macro cross-assembler, operating system diskette.	Relocatable Macro cross-assemblers: Z80, Z8, Z8000, 6800/01/02, 6500/01/02, 1802/05, NSC800, 9900/95 F8/3870/72, 8051, 8080/85, 6805/146805, 6809, 68000	Doubles assembly speed of Intellec	SPICE	RELMS	
Text editor, two-pass assembler, debugger/monitor in ROM.	PL/65 compiler.	Single step, real-time TRACE; software breakpoints; operational in-circuit emulator.	6500	Rockwell	5
Screen editor, relocatable macro assembler, disk operating system.	PROM programmer and printer	Disk based operating system, softkey menu drivers, sysgen configurable, separate system and target memory, 4-target simultaneous emulation, real time in-circuit emulation, 5 hardware breakpoints per target.	RDC-1001/2	Rockwell	
Assembler, debug Basic PL/65.	ACIA Module 16K RAM, Module in-system Emulator R6502, R6500/1, R6500/*, R6512.		SYSTEM65	Rockwell	
Flex disk operating system. Programming is done in assembly language.	Basic, Pascal, Forth.	Provides 7 additional slots for expansion with Modulas One modules. Select from 25 modules.	802	SBE	
		AS04, Flex.	809	SBE	
Probug, bootstrap monitor	CPM68K Regulus (UNIV Compatible).	5 spare Multibus Slots.	PDS-100	SBE	10
OS/40 ROM-based operating system; communications firmware; simulated I/O support.	Assemblies/compiles performed on host.	Optional emulator processors and prototype control probes; system designed as a peripheral for a host system.	**8540**	**Tektronix (5117)**	
DOS/SO disc based operating system; line-oriented editor; macro assembler with English language diagnostics; linker supervision; communications S/W; simulated I/O support.	Optional emulator processors and prototype control probes; ROM-based powerup systems test; real-time trace.		**8550**	**Tektronix (5117)**	
TNIX (UNIX based) operating system, communication F/W, simulated I/O support.	Assemblers, C compilers, Pascal compilers, structured analysis tools, language directed editors (C, Pascal), C/Pascal HLL debug, integration control system.	Complete stand-along 11/23 or 11/73 UNIX-gased development system	**856140 Systems**	**Tektronix (5117)**	
OS/40 ROM based operating system. Simulated I/O support.	Assemblers, C compilers, Pascal compilers, structured analysis tools, language directed editors (C, Pascal), C/Pascal HLL debug, integration control system.	Complete host based development system. VAX/ULTRIX & VAX/VMS support.	**V-Systems**	**Tektronix (5117)**	
Stand-alone device			EVM7000	TI	15
MSDOS, T132000 XASM, XDS Debugger	C, PASCAL, cross compilers	XDS In-Circuit Emulator coupled with PL-HOST	T132016-XDS	TI	
MSDOS, T132000 XASM, XDS Debugger	C, PASCAL, cross compilers	XDS In-Circuit Emulator coupled with PL-HOST	T132032-XDS	TI	
Assembler, simulator, debug monitor, logic tracing with extended data/address probes.		Host independent. Utilizes host computer, requires external 5V supply.	XDS-11	TI	
Assembler, simulator, debug monitor, logic tracing with extended data/address probes.		Host independent. Utilizes host computer.	XDS-22	TI	
CP/M compatible operating system	Assembler, RTE software	RTE42 evaluator	BM4220	Toshiba	20
CP/M compatible operating system	Assembler, PL47 compiler, RTE software	RTE47 evaluator	BM4720	Toshiba	
CP/M compatible operating system	Assembler, PL47 compiler, RTE software	RTE47 emulator	BM4721	Toshiba	
CP/M compatible operating system	Assembler, RTE software	RTE48 evaluator (1 box type)	BM4820	Toshiba	
CP/M compatible operating system	Assembler, RTE software	RTE48 emulator system	BM4821	Toshiba	
CP/M compatible operating system	Macroassembler, RTE software	RTE80 real-time emulator. BM1020 is real-time controller	BM8022	Toshiba	25
CP/M, MS-DOS, VMS	C and Pascal Compilers, Assemblers, Linkers, Symbolic Debug	CRT or Host Computer (PC, MicroVax I, etc) controlled emulator with 4 hardware and 8 software breakpoints	ICD-178/278	ZAX	

Bold face indicates additional data is provided on the page noted.

MPU DEVELOPMENT SYSTEMS (Cont'd)

Supported CPUs	Maximum No. of Users Stations	Communication Ports		User RAM		Floppy Disk			Hard Disk	Logic Analyzer	PROM Programmer	Printer
		Serial	Parallel	Supplied (Kbytes)	Maximum Capacity (Kbytes)	No.	Size (In.)	Capacity (Kbytes)	Capacity (Kbytes)			
Z8000, Z80, Z8	8 to 24	eight RS232C	one	256	1Mb				36M	Opt.		Opt.
Z8000, Z80, Z8	8 to 24	eight RS232C	one	1Mb	4Mb				128M	Opt.		Opt.
Z8000, Z80, Z8	8 to 24	eight RS232C	one	1Mb	4Mb				320M	Opt.		Opt.

Software Support					
Standard	Optional	Comments	Model	Source	Line
ZEUS description incl., C, Assembler	Fortran, Cobol, Basic	Expandable system; optional in-circuit emulators; ZSCAN family, EMS8000	Model 11	Zilog	
ZEUS description incl., C, Assembler	Fortran, Cobol, Basic	Expandable system; optional in-circuit emulators; ZSCAN family, EMS8000	Model 21	Zilog	
ZEUS description incl., C, Assembler	Fortran, Cobol, Basic	Expandable system; optional in-circuit emulators; ZSCAN family, EMS8000	Model 31	Zilog	

IC MASTER BELONGS ON YOUR BOOKSHELF

If you don't have your own IC MASTER, you can obtain your own copy by ordering now. Write for your own copy or order by telephone as described below.

IC MASTER is a two-volume set of technical data carefully organized to direct the engineer to the integrated circuits and related products that are closest to his specific needs. It is the surest way to find the optimum device to answer an engineering design requirement. By ordering now, you won't have to borrow or search for IC MASTER the next time you need it.

Typical Use of IC MASTER

Can an engineer find out who makes a 256K dynamic RAM with an access time of 120 nanoseconds or faster in less than 30 seconds?
He can if he turns to the Memory section of IC MASTER and looks for the 256K organization (words and bits per word) that he needs.
Because each device is listed in order of access time, he can easily determine the devices that satisfy his speed requirements.

In the United States only:

You can order IC MASTER simply by charging it to your VISA or Master Card credit card. To place your order (USA only) call now: (408) 249-6800/ (516) 227-1300. To order outside the USA, see list of authorized IC MASTER distributors on page 1471 of Vol. I.

ORDER YOUR COPY NOW

EZ-PRO 2.1 + IBM PC = WINNER

...now with
DEEP TRACE™
ez-pro development system
64180
64180

Complete Development Station. EZ-PRO 2.1 connects to your personal computer via RS232 and supports the widest selection of in-circuit emulators. Check the tabulation for the microprocessors you're planning to use. Each emulator is supplied with macro cross-assembler, linker, and symbolic debugger. C Language cross compilers now available for selected microprocessors.

Deep Trace. 4,096 real-time events, 256 break-points with zoning, complex triggering, scatter/gather trace management.

EZ-PRO 2.1 SUPPORTS:

Intel: 8031 8032 8035 8039 8044 8048 8748 8049 8050 8051 8052 8085A 8085A-2 8086 8088 80186 80188	**Motorola:** 6800 6801 68B00 6802 68B02 146805E2 6803 6808 68B08 6809 6809E 68B09 68B09E 68000 68008 68010	**Hitachi:** 6301 6303 64180	**Rockwell:** 6502 6503 6504 6505 6506 6507 6512 6513 6514 6515
Harris: 80C86 80C88		**RCA:** 1802 1805 1806 CDP6805E3	**Signetics:** 8X300 8X305
		Zilog: Z80A Z80B Z80H Z8001 Z8002	**National:** NSC800

...AND MORE.

american automation

14731 Franklin Avenue, Tustin, California 92680 **(714) 731-1661**
Telex II: 910-595-2670 AMAUTO TSTN

IBM is a trademark of International Business Machines, Inc.

HILEVEL
TECHNOLOGY, INC.

MICROPROGRAMMING?
...THAT'S THE HILEVEL LANGUAGE!

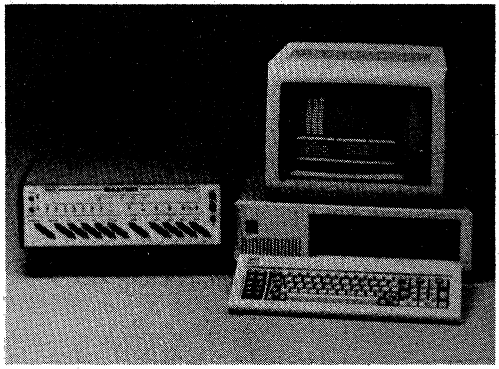

HILEVEL builds two powerful development systems for your work. Both are configurable for all of today's hardware implementations, PROM-BASED or RAM-BASED.

Microcode development is demanding work. Wide words, high speeds, and complex micro-instructions make test and debug a challenge. So, designers must have the best tools for development.

Because firmware fine-tuners need excellent visibility of target activity, HILEVEL introduced the 80-bit, 16K deep real-time TRACE. Now, with 16-level conditional triggering and 8 independent patterns per level, plus selective snapshot, visibility at full clock rate gets even better.

Virtual In-Circuit Emulation lets you see registers, flags...the total status of all your processor chips, instantly. Whatever your architecture.

The DS370's performance-analysis histogram feature allows you to define 16 tasks, then run tests to measure the efficiency of your design.

The newest development system features the DS370 Emulyzer™ combined with the IBM-PC, XT or AT. This system includes the powerful XFIBM software package, which provides a macro-meta assembler, PC communications program, emulyzer programming language (EPL) software program, and a VT100 terminal emulation program.

The UNIX* multi-user development system for microcode is the DS570. It has all features of the DS370, adds assembly in 440K and a 10 megabyte hard disk and supports up to four workstations.

*UNIX is a trademark of Bell Laboratories.

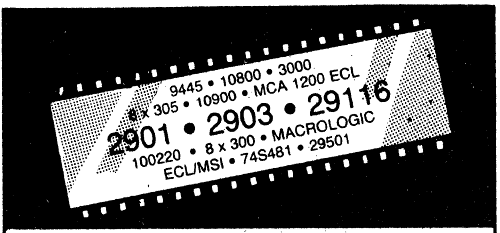

Speeding the development of microprogrammed processors from VLSI to bit-slice to gate array, the HILEVEL EMULYZERS™ contain:

MACRO-META ASSEMBLER
- 8 to 240 bit microword
- 160K to 440K user space

WRITABLE CONTROL STORE
- 16 to 240 bits
- 1K to 65K words
- 20 ns to 120 ns
- Multiple Arrays
- Pattern Generations

TARGET CONTROL
Halt ■ Run ■ Clear
Goto ■ Force ■ Jam

LOGIC STATE ANALYZER
Unlimited Breakpoints ■ Selective Trace
Change While Run ■ Data-Pattern Breaks

DS370

NEW DS570

HILEVEL TECHNOLOGY, INC.

18902 BARDEEN WAY, IRVINE, CA 92715 (714) 752-5215 TLX: 655-316
TOLL-FREE: 1-800-HILEVEL; INSIDE CALIFORNIA 1-800-752-5215

IMS D100
IMS D600
IMS D700
transputer development system

Features

- Fully integrated editor and development toolset
- Compiles occam for:
  - –Execution on development station
  - –Interconnected transputers
- All application development at occam source level
- Hierarchical program structure with separate compilation
- D100 runs on Stride 440 68000 based workstation
- D600 runs on VAX/VMS 11/7xx computers including Micro VAX
- D700 runs on IBM Personal Computer XT and AT under DOS
- Upgrade from IMS P600 Occam Programming System available
- Fully compatible with the IMS B001, IMS B002, and IMS B004 transputer evaluation boards

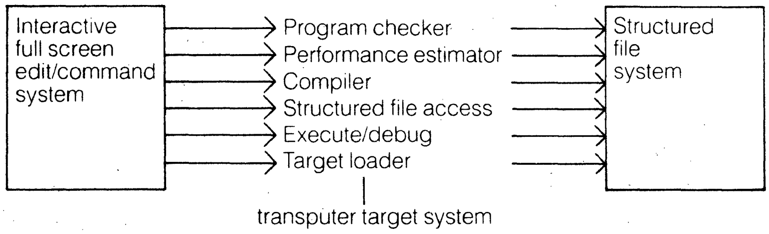
Interactive full screen edit/command system
Program checker
Performance estimator
Compiler
Structured file access
Execute/debug
Target loader
transputer target system
Structured file system

IBM is a registered trademark of International Business Machines Corporation

VAX and VMS are trademarks of Digital Equipment Corporation

Stride is a registered trademark of Stride Corporation

inmos

P.O. Box 16000 • Colorado Springs, Colorado 80935 • (303) 630-4000 • TWX 910 920 4904
Whitefriars • Lewins Mead Bristol BSI 2NP • England • Phone Bristol 0272 290 861 • TLX: 851-444723

INMOS reserves the right to make changes in specifications at any time and without notice. The information furnished by INMOS in this publication is believed to be accurate; however, no responsibility is assumed for its use; nor for any infingements of patents or other rights of third parties resulting from its use. No license is granted under any patents, trademarks, or other rights of INMOS.

and occam are trademarks of the INMOS Group of Companies.

PC/68000™
Co-Processor Module For The IBM PC

The PC/68000 Co-Processor Module transforms the IBM PC into a powerful development station for use with the HDS-200 and HDS-300 in hardware and software development. The PC/68000 is flexible to allow system design work using many members of the MC6804, MC6805, MC6801, MC6809, and MC68HC11 microcomputer chips. The power of the 10 MHz MC68000 16/32-bit Microprocessor and vast capabilities of UNIX SYSTEM V/68 is available with the co-processor module. A sophisticated I/O kernel and two megabytes of dual-ported DRAM facilitate communications between the dual processors. Extensive buffering and efficient utilization of memory for caching by the PC and its powerful partner allows the MC68000 to run at full speed.

Essentially, PCDOS runs on the PC's processor while SYSTEM V/68 executes on the MC68000. With a dual keystroke, the user can switch between operation under PCDOS or under SYSTEM V/68 and back. Files can be interchanged between operating systems and, under SYSTEM V/68, tasks can run concurrently. (SYSTEM V/68 is derived from the validated port to the MC68000 — UNIX System V/M68000, a product of AT&T Information Systems.)

The PC/68000 Co-Processor Module can be used with an IBM PC having a minimum of 10Mb of hard disk storage (20Mb recommended). Installation requires partitioning of the hard disk into separate areas for the two operating systems, as shown in the diagram for a 10Mb Disk. Any peripheral device that can be installed under PCDOS (2.0 and later versions) can be installed under the I/O kernel and accessed from SYSTEM V/68.

General Description

The Motorola PC/68000 Co-Processor Module is a dual printed circuit board sandwich which plugs into one PC motherboard slot (but occupies the space of two). It has two connectors so that the 16-bit bus in the PC-AT can be interfaced, however, only an 8-bit wide bus is supported when the module is used with the PC or PC-XT. The dual boards contain a 10 MHz MC68000 Microprocessor, two megabytes of dual-ported RAM with control logic and an array interface, MMU circuitry and circuitry which provides bus interface, communications and multiprocessor control functions.

In addition to SYSTEM V/68 and a PC-resident, interrupt driven, I/O kernel which supports all I/O operations, the PC/68000 Co-Processor Module comes with extensive hardware diagnostics for testing the MC68000 and system memory. A user-oriented program that simplifies reconfiguring the system to add another device driver or changing system parameters is also supplied.

Operation depends on the 2Mb of dual-ported RAM which is shared between the PC's processor and the MC68000. To the processor, the memory appears as addressable 64 kilobyte windows of 8-bit wide space throughout the 2Mb. To the MC68000, the memory appears as a linearly addressable 2Mb of 16-bit wide data starting at address 000000. Bidirectional buffers support both 8-bit and 16-bit MC68000 data transfers.

The dual-ported memory control logic performs four services in the Co-Processor — PC environment:

- Arbitrates memory accesses by the MC68000 and the PC
- Insures that a referenced address is within physical memory limits
- Converts the PC's logical address references to correct physical addresses (this allows optional DMA devices to operate properly with the PC)
- Detects reserved memory gaps in the PC address map

Use of memory management frees a user task from the need to precisely track physical addresses. Such assistance is essential in a multitasking application. The MMU in the PC/68000 Co-Processor Module utilizes a page map table to provide hardware protection facilities so that SYSTEM V/68 can operate in the multitasking, multiuser mode. The table contains data from which a maximum of 16 pointers to process contexts can be generated. Using this technique, context switching is extremely fast.

Communications between the MC68000 and the circuitry controlling interface to the PC I/O channel, between the MC68000 and the dual-ported RAM control logic, between the MC68000 and the memory management unit circuitry as well as between the MC68000 and the data block containing bidirectional data buffers for 8- and 16-bit transfers are effected using a fast, asynchronous 16-bit bus. This bus is also brought out to a connector header to permit optional implementation of direct, high speed communications between bit-mapped graphics controllers and intelligent mass storage devices and the MC68000.

The VME/10

8/16/32-Bit Development System

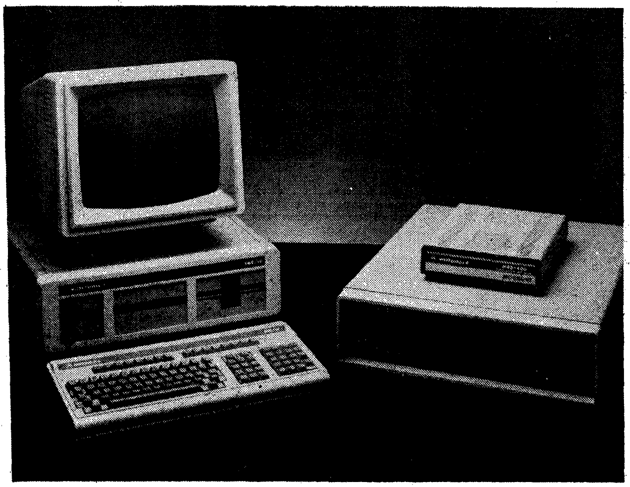

The VME/10 System is a very powerful desktop microcomputer which serves as a target system, but one which, by virtue of its accompanying software and instrumentation, can be used to develop the target programs and to debug the entire system.

The VME/10 Desktop Microcomputer lacks only an accompanying printer to constitute a complete system. A 5¼″ Winchester Disk Drive, a 5¼″ Floppy Disk Drive, a 15″ Video Display and a Detachable Keyboard all are part of the basic system. The accompanying standard software includes the VERSAdos Operating System, an M68000 Macroassembler, a Linkage Editor, CRT Text Editor, as well as a number of Utilities, Debug/Monitor and Diagnostics. For a UNIX Systems environment, the SYSTEM V/68 Operating System is available.

And there are a few desirable options, too. For example, you can buy VME/10 with a 15Mb, or 40Mb Winchester Drive, to fit your specific needs. And you can custom-tailor the system with add-in memory and I/O modules from the VMEmodule and I/O module lines. The inherent 5-slot VMEbus backplane and 4-slot I/O Channel cardcage makes system expansion simple.

While the VME/10 Development System is a powerful tool for the design of your target software, it is also ideal for hardware emulation and system analysis when used as a Host in conjunction with the Bus State Analyzer and HDS-Development Stations. Together, these instruments provide all the essentials for M68000/M6800-based microprocessor system design.

DEVELOPMENT HARDWARE/SOFTWARE CONFIGURATION GUIDE

Family or Chip	Control Station	Development System Software									
		System V (PC/68000, VME/10)					VERSAdos (VME/10)				
		C	SLD	Psci	PASM	ASM	C	Psci	FTN	ASM	XASM
6801 MC6801 MC6803 MC68701 MC6801U4 MC6803U4 MC68701 MC68701U4	HDS-200			X		X					X
	HDS-300				X					X	
6804 MC6804 MC68HC04	HDS-200										X
6805 MC6805 MC68705 MC68HC05C4 MC146805 MC1468705	HDS-200										X
6809 MC6809 MC6809E	HDS-200				X			X			X
	HDS-300				X			X			X
68HC11	HDS-300	X	X		X						
68000	HDS-400	X			X		X	X	X	X	X
68008	HDS-400	X			X		X	X	X	X	X
68010	HDS-300	X	X		X	X					
	HDS-400	X				X	X			X	
68020	HDS-400	X				X	X			X	

MOTOROLA

HDS-400

For M68000-Based Systems

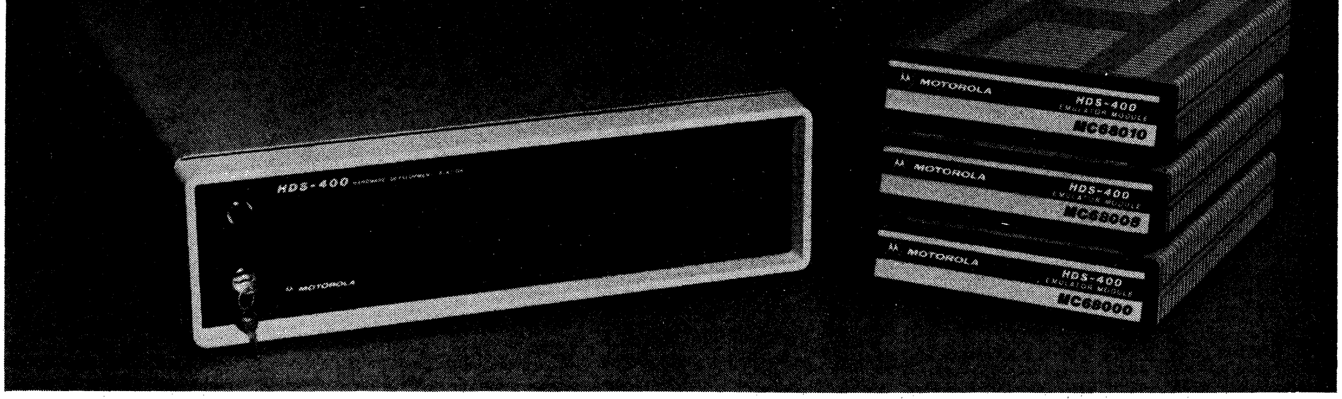

HDS Development Stations are designed to emulate the target MPU/MCU of systems under development, including the associate ROM/PROMs, until the configuration has been fully proven. This capability allows the software to be fully evaluated and debugged at an early stage in the development process. Then, when debugging is completed, and a hardware prototype has been assembled, the Development Station can be plugged into the target prototype in place of the actual MPU/MCU, allowing a complete evaluation of the total system.

The debug features of the Development Stations are designed to simplify this task substantially. Line-by-line assembly and disassembly permits detailed performance analysis. Sixteen program breakpoints can be placed, temporarily, into the user program to enable rapid isolation of a program fault.

The contents of all registers can be displayed or modified. Mass block memory moves, data updates, and memory scans are among the many operations.

HDS-300

The HDS-300 Microprocessor Hardware/Software Development Station reflects the latest technological advances in microprocessor emulation, analysis, and development support. This powerful system provides development support for a large and growing family of Motorola microprocessors. Specifically, the HDS-300 supports the MC6801/03, MC6809, MC6809E, and MC68HC11 families of microprocessors. Motorola offers alternative development stations for other Motorola microprocessors.

The HDS-300 system, a leader in emulation technology, consists of two modules: the control station, and the emulator module. Together, these modules provide unprecedented real-time emulation support. The HDS-300 is a powerful stand-alone emulation system that requires only the target object file from the host system. The HDS-300 is also sufficiently flexible to allow operation using any standard RS-232C terminal.

In addition to emulation support, the HDS-300 features a "window" capability which enables the user to look into the target system operation to a degree not possible without the emulator. The "window" concept enables the user to examine the target system by starting and stopping target code execution. A variety of stopping conditions may be specified.

The user may examine or alter target memory or processor registers when target execution is stopped. Target code instructions may also be "stepped" through, one execution at a time, to examine execution results. Alternatively, when a stop condition is specified, the processor is instructed to continue running under emulation until the specified condition is reached.

The stop-examine-continue method is an effective tool for hardware and software debugging. It provides an efficient and highly effective way of isolating and resolving problems typical in early system development.

Two major factors contribute to the usefulness of the HDS-300 as a system development tool. One factor is the ability of the HDS-300 to be plugged into a socket on the prototype hardware, thus allowing the development station to serve as a fully functional hardware substitute for the selected MPU in the target system. The second factor is the powerful software analysis capability of the HDS-300 which enables the user to rapidly debug and integrate the target system.

HARDWARE DEVELOPMENT

The HDS-300 is designed to emulate the target MPU until its configuration has been fully proven. This capability allows the hardware and software of the target system to be tested together at an early stage of the development process. Changes to the hardware configuration and associated software can be quickly and easily accomplished and tested. When the debugging tasks have been completed, the HDS-300 will act in place of the target MPU allowing complete evaluation of the system. The HDS-300 also has a clock that can be used until the prototype system clock is operational.

SOFTWARE DEVELOPMENT

The HDS-300 utilizes its software development tools early in the system development process. Original system algorithms and I/O parameters can be tested before writing any

HARDWARE/SOFTWARE — continued
HDS300 — continued

software code. After this phase is completed, a source program is prepared using the host's editing facilities.

The source program is compiled or assembled and the software modules are linked together in the host loader. The host translates the software into Motorola's modular "S" record format and downloads the program into the HDS-300. The development station is then prepared to act as a substitute for the target system.

The single-line assembler/disassembler permits the HDS-300 user to make minor software patches independently of host re-assembly. The latest target software image can be stored on the HDS-300's 5¼ inch floppy disk to permit fast reloads, increased stand-alone independence, and reduced debug time.

When system prototype hardware development is completed, user programs can be thoroughly inspected and modified as required.

EMULATION MEMORY

The HDS-300 contains emulation memory which can be used to replace target memory. Assignment of emulation memory to the target memory map (in blocks) is specified by the user. The HDS-300 offers 32Kb of emulation RAM in the standard product. An optional Emulator Memory Module may be added to increase emulation memory to 64Kb, 128Kb, or 256Kb.

In the process of "mapping" memory, the user may also designate blocks of contiguous memory as "write-protected." This feature allows the user to detect forbidden "writes" to memory locations which will occupy ROM or EPROM in the final target configuration.

BUS ANALYZER

In addition to emulation, the HDS-300 user often needs the capability of the Bus State Monitor to record or "trace" activity on the executing target processor bus. This information is consequently used for analysis. The bus analyzer function may be extended to provide triggering capability based on user-selected conditions (or events) on the processor bus. Both hardware and software faults may be quickly isolated using the analyzer.

Triggering by the analyzer is flexible. The trigger may:

- Initiate or Terminate a Bus Activity Trace
- Cause Emulation to Stop
- Provide a Single to an External Instrument

Development Stations

HDS-200
For M6804/5-Based Systems

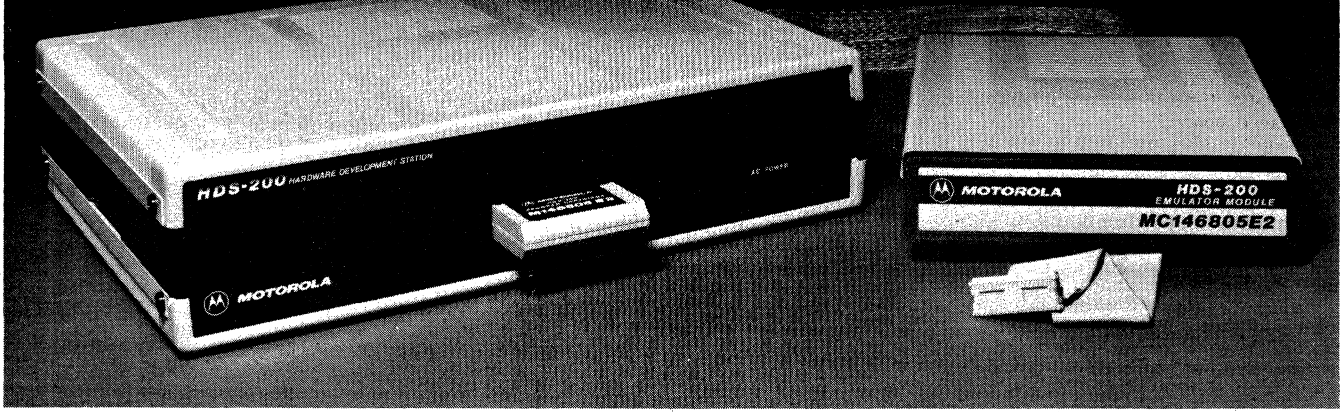

The HDS Development Stations consist of two separate entities — a Control Station and an Emulator Module. The Control Station contains an appropriate MPU (MC68000 for the HDS-400; MC6809 for the HDS-200) and the memory and logic functions necessary to exercise program control. The Emulator Module contains the specific MPU/MCU which the station is to emulate, together with supporting circuitry. Hence, there is a different Emulator Module for each of the MPU/MCUs which the system is intended to emulate.

In operation, the connector emanating from the Emulator Module plugs into the socket of the target system's MPU/MCU from which the actual target MPU/MCU has been removed. Thus, the full debugging power of the Development Station is inserted into the target system — without any change in the actual operation of the target.

The HDS-400, with the appropriate interface hardware and software options can operate in conjunction with the VME/10, EXORmacs or DEC VAX acting as a Host computer. The HDS-200 operates in conjunction with the VME/10, EXORmacs, EXORset or EXORciser as Host. The function of the Host is to download the functional program into the HDS-system. Thereafter, the HDS-400 system can operate independently of the Host to accomplish its debugging activities — thus freeing the Host for additional development tasks. The HDS-200 requires continuous involvement of the Host during the debugging process.

The appropriate component complements for the various target MPU/MCUs and the desired Host are detailed in the accompanying tables.

Integrated Analyzer, Emulator, Programmer

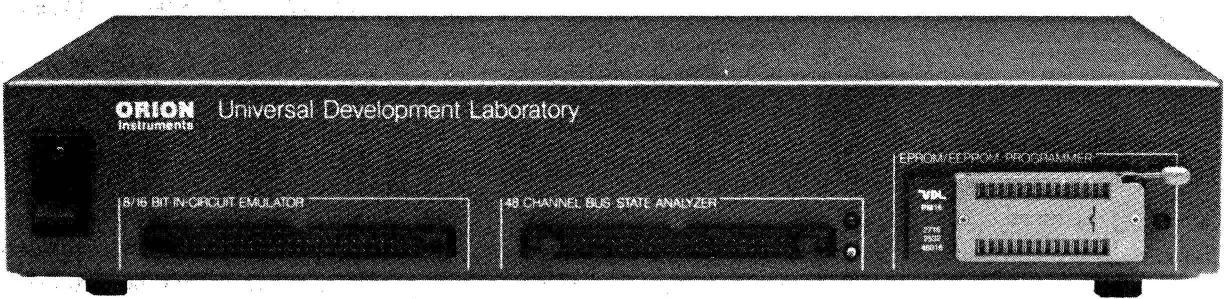
ORION Instruments
Universal Development Laboratory
8/16 BIT IN-CIRCUIT EMULATOR
48 CHANNEL BUS STATE ANALYZER
EPROM/EEPROM PROGRAMMER
UDL
PM16
2716
2532
48016

Host Computer Interface

RS-232C connector, 19,200 or 9,600 baud, switch selectable.

Diskette Formats

CP/M 8″ IBM format, many 5¼″ formats
IBM PC 5¼″, MS-DOS
ISIS
Apple CP/M, 80 col

Emulator

Download time: 1 second for 2K bytes including 16-bit block error check. (2 sec on some systems)
195 ns max access time ROM emulation. (145 ns optional.)
32K × 8-bit or 16K × 16-bit standard. By cable, program option.
Expandable to 128K bytes with optional plug-in board.
20-bit enable address decoding.
Individual 2k segments can be selected in any combination within 17-bit field.
Stand-alone operation possible as a ROM emulator.
16-bit Idle register loops target CPU allowing loading of emulation RAM and resumption of program execution.
Optional, target-processor-specific, software gives full debug capability including register and target memory display and change, breakpoints, and single stepping.
Program loading software: from hex or binary disk files, hex serial download, memory image, ROM read.

Bus-State Analyzer

48 data inputs. Two groups of 8 can be separately clocked.
6 clock signal inputs. Gated to form one bus clock:
  Clock edge filter prevents re-trigger before 100 ns.
  395 ns minimum bus cycle (10 MHz 68000)
  297 ns with optional high-speed option.
Address demultiplexing latches included—also used by emulator
170 cycle × 48 bit Trace memory

EPROM/EEPROM Programmer

Smart programming algorithm for high speed.
28-pin Textool zero insertion force socket handles 24 and 28 pin devices.
Programs single supply EPROMs and EEPROMS.
One personality module handles 2716, TMS2516, 2532, 48016.
Personality modules for 2732A, 2764/128, 2764A/128A/256 also included.
Optional module available for 27512.

Signal Inputs

TTL logic levels. (74ALS inputs)
.1 ma maximum loading includes emulator & analyzer.

Analyzer Trigger

4-step sequential trigger
RAM truth tables allow search for *any* function of 8-bits at each 8-bit group, for each step.
8 truth tables per step × 4 steps = 32 256-bit tables
16-bit inside/outside range detection on address lines
4-bit segment enable gives 20-bit address capability.
Pass Counter: wait up to 65,382 events or cycles before 4th step.
Before/After/At Pass count trigger enable.
Delay Counter: wait up to 65,382 events or cycles to stop trace.
Filter feature. Records only cycles which satisfy trigger criterion plus 0-3 cycles after each qualified cycle.
Oscilloscope sync output. (Sync on trigger.)
Interrupt output: Interrupt target on trigger (if enabled)
LED indicates searching for trigger. Stand-alone operation possible while waiting for trigger.

Software Features

Command driven with single context for all 4 instruments.
Extensive macro capability
On-line Help screens.
Menu driven shell generates command lines.
User definable function keys.
Calculator, ASCII table, IC pinout library, memo pad, terminal emulation, and DOS access.

Signal Outputs

TTL logic levels (74LS244 outputs)
100 ohms forward terminating resistors on Emulator data lines.
Reset output: open collector, 7406 thru 47 ohms.
Interrupt output: open collector, 7406, low true.
9 Stimulus outputs (at EPROM socket) (8255 NMOS outputs).

Physical

Size: 2.1″ hi × 13″ wide × 7.8″ deep.
Weight: 4 lbs. (11 lbs. shipping weight)
Fits easily in a slim-line brief case.

Power

100 KHz switching supply
  110v ± 10% 50/60 Hz 15 Watts (standard)
  220v ± 10% 50/60 Hz 15 Watts (optional)

Accessories Included

UDL User's Manual
Personality Module for 2716, 2758, 2516, 2532 EPROMs and 48016 EEPROMs, 2732A module, 2764/128 module, 27256/2764A/27128A personality module.
1-ROM Emulator cable 8-bit, 24-pin version unless otherwise specified.
1-Analyzer cable pre-configured for your targe processor
1-Jumper wiring tool (3M)
1-40-pin IC clip
1-16-pin IC clip
1-RS-232 cable, 10-ft. retractile (coiled cord)
1-Input stimulus cable
2-Component clip adaptor probes
1-System Control Program Diskette

$2995

ORION
Instruments

702 Marshall St., 6th Floor
Redwood City, CA 94063
Tel. (415) 361-8883
Telex 530942
(800) 245-8500

INTRODUCTION TO MICROCOMPUTER BOARDS

In this section single and multiple board microcomputers are arranged in alphanumeric sequence by data word size, bus type and, within that grouping, according to the microprocessor on which they are based, and then, in order of increasing CPU clock frequency.
Microcomputer support boards are listed after the CPU boards. Support boards are grouped according to the supported system or bus, and then alphabetically by manufacturer.

Detailed Product Information provided by:

Fairchild	2101
Fujitsu America	2102
Motorola Semiconductor	2108
Wintek	2118

The manufacturers listed above have provided detailed information on their latest and most significant products.

EINFÜHRUNG MIKROCOMPUTER-PLATINEN

In deisem Abschnitt finden Sie Einplatinen- und Mehrplatinen-Mikrocomputer in der Reihenfolge ihrer Wortgröβe und, innerhalb dieser Gruppierung, in der Reihenfolge der Mikroprozessoren, auf denen sie basieren. Hardware und Software-Unterstützung ist für jede verfügbare Platine aufgelistet.

Neu in diesem Jahr ist ein weiterer Selection Guide für Mikrocomputer-Zusatzplatinen. Die Platinen sind nach den unterstützten Computersystemen geordnet.

INTRODUCTION AUX MICRO-ORDINATEURS SUR CIRCUITS IMPRIMES

Dans cette Section les micro-ordinateurs à circuits imprimés simples ou multiples sont regroupés suivant la taille du "mot de données", et, à l'interieur de chaque groupe, suivant le type de microprocesseur sur lequel, ils sont basés. Les supports hardware et software sont indiqués pour chaque circuit.

Une nouveauté cette année : l'existence d'un Guide de Sélection supplémentaire pour les circuits supports pour micro-ordinateurs. Les circuits sont regroupés d'après les systèmes ordinateurs utilisés.

INTRODUCCIÓN A MICROCOMPUTADORAS DE TABLEROS DE CIRCUITOS IMPRESOS MÚLTIPLES

En esta sección microcomputadoras de tablero individual o múltiple están agrupadas en secuencia de acuerdo al tamaño de palabra para datos y, dentro de ese grupo, por medio del microprocesor en el cual están basados. Apoyo por medio de equipos y programas aparecén para cada tablero de circuitos impresos.

Nueva para este año es la guía de selección suplementaira para suporte de tableros de microcomputadoras. Estos tableros están agrupados de acuerdo al sistema de computadora al que sostienen.

マイクロコンピューターボード への案内

このセクションでは単数，複数ボードコンピューターがデータ，ワードサイズによってグループにまとめられ，そのグループ中ボードコンピューターの基になっているマイクロプロセサ順に記載されています。ハードウエア，ソフトウエア共各ボード毎にのせてあります。本年新たに加わったのはコンピューターサポートボード用の補足セレクションガイドでボードはコンピューターシステム毎にグループになっています。

MICROCOMPUTER BOARDS

General						I/O			Memory			
										Supplied/Extra Capacity		
Data Word Size (bits)	Instruction Word Size (bits)	CPU Type	Clock Frequency Min/Max (MHz)	Bus Type	Supply Voltage (V)	No. of Serial Ports	No. of Parallel Lines	Max. Baud Rate (kb/s)	Directly Addressable Words (Kbytes)	RAM (Kbytes)	(P)ROM (Kbytes)	DMA Capability
	8-32	Z80A	4	S-100	8	2		38.4	64	96		x
8	8-24	R6511Q	2		5	1	32	19.2	64	0.1/32	0/32	
8	8	Z8	7.37		5	1	39	19.2	120	2/8	0/8	
8	8-32	Z80	4		5		40		64	1/2	0/8	
8	8	Z80	4/8		5, ± 12	1	40	64	64	32	0/32	
8	8	Z-80A	4		5, ± 12	2	2	38.4	64	64	2/4	x
8	8	Z-80A	4		5, ± 12	4	2	38.4	64	64	2/4	x
8	8	Z-80B	6		5, ± 12	2	2	38.4	64	64	2/4	x
8	8	Z-80B	6		5, ± 12	4	2	38.4	64	64	2/4	x
8	8	Z-80B	6		5, ± 12	2	1	38.4	64	64	2/64	x
8	8	Z-80B	6		5, ± 12	2	1	38.4	64	128	2/64	x
8	8	Z-80B	6		5, ± 12	2	1	38.4	64	256	2/64	x
8	8	6303	1	—	6-10	1	14	9.6	64	256	32	
8	8/24	65C02	2/4		5	1	6	19.2	64	8/48	8/20	
8	8,16,24	6502	1		5		16		5	1	2 or 4	
8	8,16,24	6502	1		8-10		64		20	4	16	
8	8-24	6502	1			1	0		56	20/4	10.5	
8	8	6503	1/2		5		32		4	1	2	
8	8-24	6511	2		± 12	1	30	19.2	64	2/32	0/32	
8	8-24	6511	2		5	1	24-29	19.2	64	2/32	0/32	
8	8	6809	1.7		5, ± 12	1	76	19.2	100	28	72	
8	8	8052	11.06		5	2	37	19.2	128	8/16	0/8	
8	8-24	8085A	2		5	1	22		64	0.256/0	0/4	
8	8-24	8085A-2	4.84		5, ± 12	1	48	38.4	64	4/32	0/60	
8	16	8088	4	—	5	1	23	4.8	32	4/8	8/16	
8	16	8088	4	—	5	1	23	4.8	32	8/32	8/16	
8	16	6502	1	AIM-65	5	0	72		64	1/4	0/20	
8	8	8044	12	BITBUS	5	1	24	2400	64	2		
8	8	8044	12	BITBUS/SBX	5	1		2400	64	2		
8	8-24	6800	1	Bus-44	5, ± 12	1	32	9.6	64	0.5	0/4	
8	8-24	6800	1	Bus-44	5	1	32	9.6	64	0.5	0/4	x
8	8-40	6809	1	Bus-44	5, ± 12	2	32	9.6	64	2/32	0/64	
8	8-40	6809	1	Bus-44	5, ± 12	2	32	9.6	64	6	0/32	
8	8-40	6809	1	Bus-44	5, ± 12	2	32	9.6	64	24	0/32	
8	8-24	6800	1	Bux-44	5, ± 12				64	128		
8	8-16	8085A	5	CAMAC	± 5, ± 12	2	16	19.2	64	16/16	0/32	x
8	18	Z80	2.5/4	Cyberbus	5	0	0		64	0/8	0/16	x

Sequenced alphanumerically by data word size, CPU type, and increasing clock frequency.

MASTER SELECTION GUIDE

Software Support					Hardware Support	Comments	Model	Source	Line
Assembler	Debug/ Monitor	Editor	High Level Language	Operating System					
				x	x	Uses M-60 Multiprocessing expansion bus.	DPC-183	ACE	
x	x	x		x	x	Expandable, IEEE-488 capability, timer, memory-mapped I/O, with most microcomputers, can be used as a development system with in-circuit emulation.	SBC6511	ConnMicro	
	x	x	x		x	Similar to MC-1N, extra RAM, EPROM, and I/O, control basic (2K).	MC-1Z	Basicon	
x	x	x	x	x	x	Three 8-bit output ports, two 8-bit input ports.	MD-SBC1	Mostek	5
					x	Cassette interface, battery-packed clock-calendar chip, dip switches, low-cost controller board.	SBS-80	SingleBoard	
x	x	x	x	x	x	8", 5 1/2" and 3 1/2" floppy controller	DSB-4042	Davidge	
x	x	x	x	x	x	8", 5 1/2" and 3 1/2" floppy controller	DSB-4044	Davidge	
x	x	x	x	x	x	8", 5 1/2" and 3 1/2" floppy controller	DSB-4062	Davidge	
x	x	x	x	x	x	8", 5 1/2" and 3 1/2" floppy controller	DSB-4064	Davidge	10
x	x	x	x	x	x	50 pin expansion, 8", 5 1/2" and 3 1/2" floppy controller	DSB-6064	Davidge	
x	x	x	x	x	x	50 pin expansion, 8", 5 1/2" and 3 1/2" floppy controller	DSB-6128	Davidge	
x	x	x	x	x	x	50 pin expansion, 8", 5 1/2" and 3 1/2" floppy controller	DSB-6256	Davidge	
						Complete datalogger with A to D and Basic operating system	TATTLETALE II	Onset	
x	x	x	x	x	x	Includes 12 bit A/D, instrumentation, amp and 16-channel multiplexer.	IDAM	Golden	15
						Crystal-controlled clock	Cortex8220R	Cortex	
				x	x	4 NMI lines, all gated. Two 7805 voltage regulators on board. 555 power-on start-up.	Cortex8268K	Cortex	
x	x		x	x	x	See Superboard II. Nine-digit disk extended Basic and software I/O distribution. RS-232 or cassette interface.	CIPMF	OhioSci	
x	x	x			x	Accepts 9-18V ac or dc. With MMC-ACIA adaptor accepts 6551 ACIA (19.2 baud). ICE in-circuit emulator permits program development with any 6502-based system.	MMC/03	Brachman	
x	x	x		x	x	RS-232 with CmCnet. Expandable, with most microprocomputers, can be used as a development system with in-circuit emulation.	SBC6511-KA	ConnMicro	20
x	x	x		x	x	IEEE-488 interface. Exandable. Can be used as a controller. With most microcomputers, can be used as a development system with in-circuit emulation.	SBC6511-KB	ConnMicro	
x			x	x		A single board system with 86x25 display, keyboard, floppy printer.	DT6000	AppBusComp	
	x	x	x		x	Similar to MC-1Z except with a full 8K basic.	MC-11	Basicon	
						Four-level vectored interrupt, Multimaster control, programmable 14-bit binary timer, optional RS232C port.	80/04	MicroInds	
	x				x	Stand-alone single-board computer with prototyping area, SBC 80/24 compatible, 2iSBX connectors, CMOS RAM with battery backup.	Multiboard-85	MicroDesigns	25
	x	x	x	x	x	Industrial development and control system with on board EPROM programmer, BASIC and FORTH in firmware.	ipc-SBC88-1	Vesta	
	x	x	x	x	x	Industrial development and control system with on board EPROM programmer, BASIC and FORTH in firmware.	ipc-SBC88-2	Vesta	
x	x	x	x	x	x	Software compatible with AIM-65.	6500	Cubit	
x	x		x	x	x	Digital remote controller board, BITBUS interface plus 24 lines digital I/O, SBX connector for expansion, distributed control applications.	IRCB44/10	Intel	
x	x		x	x	x	Intelligent multimodule board, interface from SBX-bus to BITBUS with room for user programs to offload the host CPU.	iSBX344	Intel	30
x	x	x	x	x	x	Serial port is programmable to 9600 baud.	**MCL45**	**Wintek (2118)**	
x	x	x	x	x	x	Serial port is programmable to 9600 baud. Single 5V supply.	**MCV45**	**Wintek (2118)**	
x	x		x		x	On-board real-time clock interrupt, power-on reset and watchdog timer circuit.	**MCH18**	**Wintek (2118)**	
x	x		x		x	Watchdog timer, real-time clock	**MCH38**	**Wintek (2118)**	
x	x		x		x	Watchdog timer, real-time clock	**MCH68**	**Wintek (2118)**	35
x	x	x	x		x	Socket for EPROM, 1 K to 4 Kbytes	**MCL10**	**Wintek (2118)**	
x	x	x	x	x	x	Three real-time clocks, 28 interrupt sources, optional hardware math package. System is designed for process-control applications.	3885-Z1C	KineticSys	
x	x	x	x	x	x	On-board vectored interrupt controller and memory-mapped I/O.	1080	Cybersys	

Bold face indicates additional data is provided on the page noted.

MICROCOMPUTER BOARDS (Cont'd)

General						I/O			Memory			
										Supplied/Extra Capacity		
Data Word Size (bits)	Instruction Word Size (bits)	CPU Type	Clock Frequency Min/Max (MHz)	Bus Type	Supply Voltage (V)	No. of Serial Ports	No. of Parallel Lines	Max. Baud Rate (kb/s)	Directly Addressable Words (Kbytes)	RAM (Kbytes)	(P)ROM (Kbytes)	DMA Capability
8	19	6502	1/2	Cyberbus	5	0	0		512	0/1	0/2	x
8	19	8085	4	Cyberbus	5	0	0		512	0/1	0/2	x
8	8-16	NSC800	2	C-44	6.5-18		22	9.6	60	2.17	0/2	
8	8-32	NSC800	3	C-44	6.5-18		22	9.6	64	0.178	6	
8	8	6805E2	1	C-44	6.5-18		8	9.6	8	1.19	2/6	
8	8	80C85A	1	C-44	6.5-18		24	19.2	64	2	2	
8	8	80C88	1	C-44	6.5-18	1	22	38.4	512	25	8	
8	8-24	6801		DIN	5/12	1	12	9.6	640	12	8	
8	16	MC68008	8/10	EXORbus	5, ± 12	6		38.4	1000	8/56	16/112	—
8	8	Z80	4/6	EXORbus	5, ± 12	1	8	19.2	64	4	8/32	
8	8	6502	1/2	EXORbus	5, ± 12	2	76	19.2	64	0/56	0/64	x
8	8	6502	1/2	EXORbus	5, ± 12	1	76	19.2	32	8	24	x
8	8	6502	1/2	EXORbus	5, ± 12	1	8	19.2	64	4	8/32	
8	8-24	6800	1	EXORbus	5, ± 12	1	60		64	1	0/4	x
8	8-24	6800	1	EXORbus	5, ± 12	1	32	9.6	64	1	0/8	x
8	8-24	6800	1	EXORbus	5, ± 12	1	8		64	0/10	0/10	x
8	16	68008	8/12	EXORbus	5, ± 12	2	40	19.2	1MB	64	64	x
8	8-24	6801	1/1.25	EXORbus	5, ± 12	2	10	9.6	64	3:1/8	2/8	
8	8-24	6802	1	EXORbus	5, ± 12	0	26		64	128	0/4	
8	8-24	6802	1	EXORbus	5, ± 12	1	26	9.6	64	128	0/4	x
8	8	6802	1/2	EXORbus	5, ± 12	1	8	19.2	64	4	8/32	
8	8-24	6809	1	EXORbus		2	20		64	0/10	0/20	
8	8-24	6809	1	EXORbus		1	20		64	2	2/14	
8	16	6809	1/2	EXORbus	5, ± 12	2	40	38.4	1048	2/8	2/32	
8	8-32	6809	2	EXORbus	5	2			1000		8	x
8	8-24	6809	2	EXORbus	5, ± 12	1	20	28.8	64	2	2/14	x
8	8	6809	4/8	EXORbus	5, ± 12	1	8	19.2	64	4	8/32	
8	16	6802	0.5/1	EXORciser	5, ± 12	2	40	38.4	56	1.2	6	x
8	16	6809	1	EXORciser	5, ± 12	2	40	38.4	64	1	6	
8	8	8080A	2	FlexibusII	5, ± 12	1	16	9.6	64	1	0/7	x
8	8	8080A	2	FlexibusII	5, ± 12	1	32	9.6	64	1	0/3	x
8	8-32	Z80	4	FlexibusIII	5,12	2		500	64	1/8	0/8	x
8	8	Z80A	2.5	IBMPC	5, ± 12	1	1	19.2	64	64		
8	8	Z80A	2.5	IBMPC	5, ± 12			1200	10	2	8	
8	8	Z80B	4.77	IBMPC	5				64	64		
8	8	Z80B	4.77	IBMPC	5, ± 12	2	1	19.2	256	256		
8	8-48	8088	5	IBMPC	5, ± 12	2				256	64	x
8	8-48	8088	5	IBMPC	5, ± 12	1				128	32	x
8	8-24	8080A	1.02	MCS		0	24		32	1	0/7	
8	8-24	8080A	2	MCS		3	0		32	1	0/7	

Sequenced alphanumerically by data word size, CPU type, and increasing clock frequency.

Software Support									
Assembler	Debug/ Monitor	Editor	High Level Language	Operating System	Hardware Support	Comments	Model	Source	Line
x	x	x	x	x	x	On-board vectored interrupt controller and memory-mapped I/O.	1012	Cybersys	
x	x	x	x	x	x	CPU card, 2 or 4 MHz clock is switch-selectable.	1085	Cybersys	
	x				x	18-bit timer, on-board clock, voltage regulator, 5 interrupts, 27C16 EPROM.	CPU-800A	Onset	
						Two 16-bit timers, real-time clock, switching voltage regulator, 5 interrupts.	CPU-801	Onset	
	x				x	Eight analog input lines, real-time clock, voltage regulator, 27C16 EPROM, 256-bit EEPROM.	CPU-6805A	Onset	5
	x				x	2mA low power mode	CPU-8085	Onset	
	x					100NA low power mode	CPU-8088	Onset	
			x	x		Single-board FORTH microcomputer.	TDS900	Stynetic	
x	x	x	x	x	x	PAL, Generated memory map using 8K and 16K static RAMS and 8K through 64K EPROMS.	9641	CreMicro	
x	x	x	x	x	x	Interchangeable 6502/6802/6809/Z80 CPUs. GPIB, ACIA, printer ports, VUA, VXA, VMA and bootstrapping.	GMS6527	GenMicro	10
x	x	x	x	x	x	Basic, assembler, forth, PL65, real clock, CMOS battery for all RAM.	ASBC-65-64	AppBusComp	
x	x	x	x	x	x	Basic, assembler, forth, PL65, CMOS battery for RAM.	ASBC-65-8	AppBusComp	
x	x	x	x	x	x	Interchangeable 6502/6802/6809/Z80 CPUs. GPIB, ACIA, printer ports, VUA, VXA, VMA and bootstrapping.	GMS6506	GenMicro	
x	x	x	x	x	x	Crystal-controlled clock, interrupt, DMA, power-on reset, buffered bus, 3 PIAs.	M68MM01	Motorola	
x	x	x	x	x	x	Crystal-controlled clock, interrupt, DMA, power-on reset, buffered bus, 2 PIAs.	M68MM01A2	Motorola	15
x	x	x	x	x	x	Three 16-bit timers, parallel printer I/O interface, buffered bus, 5 sockets for 2K EPROM, ROM or RAM.	M68MM01D	Motorola	
x	x	x	x	x	x	Forty I/O lines, 20 buffered. Can also use 8-bit 6502, 6802, 6809, and Z80 CPUs. GPIB Talker/ Listener/Controller port.	GMS6507	GenMicro	
x	x			x	x	ACIA (RS-232C) and on-chip SCI (RS-232C and 2DmA current loop. Two multitasking kernels. Designed for RUT applications.	MBK6801	MRCSys	
x	x	x	x	x	x	Three 16-bit timers, programmable baud rate.	M68MM01B	Motorola	
x	x	x	x	x	x	Audio cassette interface, dynamic RAM refresh, buffered bus, 3 16-bit timers.	M68MM01B1A	Motorola	20
x	x	x	x	x	x	Interchangeable 6502/6802/6809/Z80 CPUs. GPIB, ACIA, printer ports, VUA, VXA, VMA and bootstrapping.	GMS6525	GenMicro	
x	x	x	x	x	x	Can use RAM in ROM sockets.	M68MM17	Motorola	
x	x	x	x	x	x	Three 16-bit timers, DMA buffered bus.	M68MM19	Motorola	
	x			x	x	Resident monitor. Has 2 kbytes of nonvolatile RAM with space for RAM or ROM expansion.	9619	CreMicro	
x	x	x	x	x	x	Designed for use with OS-9 operating system. Real time interrupt PTM on-board.	9639	CreMicro	25
x	x	x	x	x	x	Three 16-bit timers, DMA buffered bus.	M68MM19A	Motorola	
x	x	x	x	x	x	Interchangeable 6502/6802/6809/Z80 CPUs. GPIB, ACIA, printer ports, VUA, VXA, VMA and bootstrapping.	GMS6526	GenMicro	
	x				x	ACIA, PIA, bit-rate generator, interrupt vector generator, power-failure protect restart triple programmable timers.	9600A	CreMicro	
	x				x	ACIA, PIA, bit-rate generator, interrupt vector generator, power failure protect restart, hardware compatible with CMS 9600A.	9609	CreMicro	
x	x		x	x	x	RS-232, on-board battery	1806A	Xycom	30
x	x		x	x	x	RS-232, on-board battery	1810Z	Xycom	
x	x	x	x	x	x	High-speed hardware floating point math optional 1862A. Master/slave mode capability for multiprocessor applications. Supports digital, analog systems.	1862+A	Xycom	
				x		Also operates with TI Professional compater.	FG-114	Microlog	
						Videotex adapter.	FG-117	Microlog	
				x		CP/M Co-processor.	FG-100A	Microlog	35
				x		CP/M Co-processor, real time clock/calendar. Also operates with TI Professional computer.	FG-119	Microlog	
			x	x	x	Three timer channels, 8 levels of interrupts, supports MS-DOS, CP/M86 and concurrent CP/M.	FE6400	Faraday	
			x	x	x	On-board floppy disk controller and monochrome display controller, supports MS-DOS, CP/M86 and CP/M.	FE6410	Faraday	
			x		x	Expansion capability without backplane.	MCS80-0013	Bedford	
			x		x	Flexible packaging and cabling.	MCS	Bedford	40

Bold face indicates additional data is provided on the page noted.

MICROCOMPUTER BOARDS (Cont'd)

General						I/O			Memory			
										Supplied/Extra Capacity		
Data Word Size (bits)	Instruction Word Size (bits)	CPU Type	Clock Frequency Min/Max (MHz)	Bus Type	Supply Voltage (V)	No. of Serial Ports	No. of Parallel Lines	Max. Baud Rate (kb/s)	Directly Addressable Words (Kbytes)	RAM (Kbytes)	(P)ROM (Kbytes)	DMA Capability
8	8-16	I805A	2.5/4.9	Microboard	5	1	25	38.4	64	2/40	0/32	x
8	8	LH-5080	2.5	Microboard	5		20		64	2	0/4	
8	8	Z80A	4	Microboard	5		20		64	2	0/4	
8	8-16	1802	0.3/2.46	Microboard	5	1	1	19.2	64	2	0/4	x
8	8	1802	0.3/2.46	Microboard	5	1	0	19.2	64	2	0/4	x
8	8-16	1802	2	Microboard	5	1	20		64	4	0/8	x
8	8-16	1802	2	Microboard	5	1	20		64	1	0/8	x
8	8-16	1802	2	Microboard	5	1	1		64	1	0/4	x
8	8-16	1805	0.3/2.46	Microboard	5	1	16	19.2	64	2	0/4	x
8	8-16	1805	2	Microboard	5	1	20		64	4	0/8	x
8	8-16	1805	2	Microboard	5	1	20		64	1	0/8	x
8	8-16	1805	2	Microboard	5	1	16		64	1	0/4	x
8	8-16	1805	2.5	Microboard		1	0		64	2	0/4	x
8	8	NSC800	2	Multibus	5	2	22	9.6	64	1/10	4/16	
8	8-24	NSC800	2.5	Multibus	5, ± 12	1	48	19.6	64	8/56	56	
8	8	Z80	2/4	Multibus	5, ± 12	2	56	9.6	64	4	8/16	x
8	8-32	Z80	2/4	Multibus	5, ± 12	2	32	19.2	64	64	64	x
8	8-32	Z80	2/4	Multibus	5, ± 12	2	32	19.2	64	1	0/8	
8	8-32	Z80	2/4	Multibus					64			
8	8-24	Z80	4	Multibus	5	2	16	19,200	16	32	16	x
8	8-32	Z80A	2/4	Multibus	5, ± 12	2	8	19.2	64	64/1MB	0/32	x
8	8-32	Z80A	2/4	Multibus	5, ± 12	4	8	19.2	64	64/1MB	0/32	x
8	8-32	Z80A	2/4	Multibus	5, ± 12	2	0	19.2	64	128/16MB	0/64	x
8	8-32	Z80A	2/4	Multibus	5, − 12	1	48	19.2	64	16/64	0/40	
8	8-32	Z80A	4	Multibus	5, ± 12	4	2	19.2	64	256	0/32	
8	8-32	Z80A	4	Multibus	5, ± 12	2	16	9.6	64	64/128	2/32	x
8	8-32	Z80A	4	Multibus	5, − 12	2	24	19.2	64	64	0/128	
8	16	Z80A	4	Multibus	5	1	48	9.6	64	8/8	0/16	x
8		Z80A	4	Multibus	5	1	48	9.6	64	32/32	0/32	x
8	8	Z80A	4	Multibus	5	1	48	9.6	64	64/64	0/32	
8		Z80A	4	Multibus	5	3	24	9.6	64	64/64	0/32	x
8	8	Z80A	6	Multibus		2	16		16K	32	16	
8	8-24	Z80B	6	Multibus	5	1	48	19.2	64	128/128	0/32	
8	8-24	Z80B	6	Multibus	5	3	24	19.2	64	128/128	0/32	
8	8-24	6809	1/2	Multibus	5	2	48	19.2	64	9	8	x
8	8-16	6809	1/2	Multibus	5, ± 12	1	48	19.2	64	9	0/16	x

Sequenced alphanumerically by data word size, CPU type, and increasing clock frequency.

Software Support									
Assembler	Debug/ Monitor	Editor	High Level Language	Operating System	Hardware Support	Comments	Model	Source	Line
x	x	x	x	x	x	CMOS, programmable I/O, UART, RS422/232 expandable via universal backplane.	CDP18S600	RCA	
x	x	x	x	x	x	Executes Z8 instruction set, CMOS, Centronics printer interface, expandable via universal Microboard backplane.	MB80C	RCA	
x	x	x	x	x	x	CMOS, Centronic printer interface, expandable via universal Microboard backplane.	MB80N	RCA	
x	x	x	x	x	x	UART has 14 selectable baud rates. CMOS. High noise immunity, I/O lines on edge connectors, dedicated expandable through universal backplane. Pwred by exp. or I/O connector.	CDP18S602	RCA	
x	x	x	x	x	x	Same as CDP18S602	CDP18S605	RCA	5
x	x	x	x	x	x	High noise immunity, I/O lines on edge connectors, CMOS individually programmable and expandable through universal backplane. Powered through exp. or I/O connector.	CDP18S601A	RCA	
x	x	x	x	x	x	See CDP18S601	CDP18S603A	RCA	
x	x	x	x	x	x	High noise immunity. CMOS. I/O lines on edge connectors, expandable through universal backplane. Powered through exp. or I/O connectors. On-board breadboard area.	CDP18S604B	RCA	
x	x	x	x	x	x		CDP18S607	RCA	
x	x	x	x	x	x	Same as CDP18S601-604 plus additional 22 CPU instructions and on-board counter/timer. CMOS.	CDP18S606	RCA	10
x	x	x	x	x	x	See above.	CDP18S608	RCA	
x	x	x	x	x	x	See above.	CDP18S609	RCA	
x	x	x	x	x	x		CDP18S610	RCA	
					x	Micro power operation, Z80 instruction set, Breadboard area.	DR800	Dexter	
					x	CMOS, Z80 compatible, battery backed-up RAM	CBC80C/24	DiversTech	15
x	x		x		x	Eight vectored interrupts, four programmable timers, resident diagnostics, memory and I/O modules available.	S80-CPU	Acco	
x	x	x	x	x	x	Floppy controller, streaming tape interface, hard-disk interface, DMA, IEEE-488 controller.	MLZ-90	Heurikon	
x	x	x	x	x	x	Software-programmable dual baud-rate generator, 4 counter-timers, 12-bit analog input channels.	MLZ-DAQ	Heurikon	
x	x	x	x	x	x	Replaces 8080 CPU board in Intellec 800, 888. Supports all Z80 software and architectural features. ISIS-11 compatible.	Z80SAM	RELMS	
x	x		x	x	x	Intended as supervisor for Multibus system.	RSBC-Z80/32	RELMS	20
x	x	x		x	x	Floppy controller, streaming-tape interface, hard-disk interface.	MLZ-91A	Heurikon	
x	x	x		x	x	Floppy controller, streaming-tape interface, hard-disk interface, DMA, Multimaster capability.	MLZ-92A	Heurikon	
x	x	x	x	x	x	DMA, modem and SDLC/HDLC signals.	MLZ-93	Heurikon	
x	x	x	x	x	x	High-speed math processor, 16-level interrupt controller, 6 counter/timers, Multimaster bus arbitration logic, accepts floating-point processors.	ZBC-80	Matrox	
			x	x	x	On-card video graphics controller	MLZ-VDC	Heurikon	25
x	x	x	x	x	x	Floppy disk controller hard disk interface Multimaster capability, math processor interrupt controller, 3 counter/timers.	SBC-90A	InnovRes	
	x					Programmable baud rate generator, two on-board iSBX expansion sockets, on-board memory and I/O management.	PBC-80	Matrox	
x						High-memory industrial controller or low-end computer board.	MSC8001	MonSys	
x						Multimaster logic, PROM memory maps, math chip for floating-point processing.	MSC8004	MonSys	
						Optional on-board arithmetic processing unit	MSC8004A	MonSys	30
x						Multimaster logic and optional APU, single/dual address maps available with custom RAM/ROM and I/O mapping.	MSC8007/A	MonSys	
x	x		x	x	x	Intended as superviser for multiprocessor system. Communications options.	RSBC-Z80SP	RELMS	
						Optional on-board APU, individual board reset	MSC8014	MonSys	
						Optional on-board APU, individual board reset	MSC8017	MonSys	
x	x	x	x			Programs 2716, 38E70. Emulates 3870 family, cross-assembler for 8080- and 6800-based systems. On-board keyboard and display.	F68-PEP	Fairchild	35
x	x	x	x	x	x	ROM, RAM, on-board I/O and off-board I/O addresses are user defineable, 3 16-bit timers, 8 levels of vectored, maskable interrupts.	OB6000	Omnibyte	

Bold face indicates additional data is provided on the page noted.

MICROCOMPUTER BOARDS (Cont'd)

General						I/O			Memory			
										Supplied/Extra Capacity		
Data Word Size (bits)	Instruction Word Size (bits)	CPU Type	Clock Frequency Min/Max (MHz)	Bus Type	Supply Voltage (V)	No. of Serial Ports	No. of Parallel Lines	Max. Baud Rate (kb/s)	Directly Addressable Words (Kbytes)	RAM (Kbytes)	(P)ROM (Kbytes)	DMA Capability
8	8-32	80C88	5/8	Multibus	5	1	24	19.6	1 Mb	16/64	256	
8	8-48	80188	6	Multibus	5	8			1MB	64		x
8	8-24	8080A	2	Multibus	5	1	48	38.4	64	1/4	0/16	x
8	16	8080A	2.05	Multibus	5, ± 12	2	48	38.4	64	1/4	0/16	x
8	8-24	8080A	2.05	Multibus	5, ± 12	1	48		64	1	0/8	
8	8-24	8080A	2.76	Multibus	±5, ± 12	1	24	38.4	64	16/16	0/8	x
8	8-24	8080A-2	4.8	Multibus	±5, ± 12	1	48	38.4	64	4/8	0/32	
8	16	8085	3/5	Multibus	5, ± 12	2	12	19.2	64	0	6	x
8	16	8085	5	Multibus	5, ± 12	1	48	38.4	64	6/6	0/16	
8	8	8085	5	Multibus	5	1	48	19.2	64	4	0/32	
8	8	8085	5	Multibus	5	1	48	19.2	64	4	0/32	
8	8-24	8085A	2.45	Multibus		1	—		64	16	0/16	
8	16	8085A	2.5/5	Multibus	5, ± 12	1	48		64	4	0/12	
8	8-24	8085A	2.76	Multibus		1	42		64	16	0/8	
8	8-24	8085A	2.76	Multibus		4	10		64		0/8	
8	8-24	8085A	2.76	Multibus	5, ± 12	4	10	56	64	16	0/8	x
8	8-24	8085A	3.07	Multibus	5	1	48	1	64	2	0/16	x
8	16	8085A-2	2/5	Multibus	5	1	22	9.6	64	0.5/9	0/32	x
8	16	8085A-2	5	Multibus	5, ± 12	2	0	19.2	64	64	4/32	x
8	8-32	8086	5	Multibus	5, ± 12	Varies	Varies	819				x
8	8-32	8086	5	Multibus	5, ± 12	8	0	819	1Mb	17/0		x
8	8-32	8088	4.2/5	Multibus	±5, ± 12	1	24	38.4	1000	4/16	0/32	x
8	8-32	8088	4.8	Multibus	±5, ± 12	0	24	38.4	1000	4/4	0/64	x
8	8-32	8088	4.8	Multibus	5, ± 12		24		1Mb	4/4	0/64	
8	16	8088	5	Multibus	5, ± 12	varies	varies	1000	1Mb	4x28		x
8	16	8088	5	Multibus	5, ± 12	8	0	1000	1Mb	17/0		x
8	20	8088	5	Multibus	5, ± 12	4	0	9.6	1000	8	0/16	x
8	20	8088	5	Multibus	5, ± 12	2	0	500	1000	64	4/32	x
8	8-24	6801	1	None	12.6 ac	1	16	9.6	20176	0.128	2	
8	8	6303	0.5/2.0	Propriatory	7-12	1	33	154	64	8/40	16/32	
8	8	6303	0.5/2.0	Propriatory	5	1	33	154	64	8/40	16/32	
8	8	6303	0.5/2.0	Propriatory	5	1	33	154	64	8/40	16/32	
8	8-24	F3850	2	Proprietary	5	1	64	0.11	64	1	1/10	

Sequenced alphanumerically by data word size, CPU type, and increasing clock frequency.

Software Support									
Assembler	Debug/ Monitor	Editor	High Level Language	Operating System	Hardware Support	Comments	Model	Source	Line
						CMOS replacement for iSBX 88/25, 0-70°C and -40 to 70°C versions available, on-board battery-backed RAM	CBC88C/25	DiversTech	
x	x	x	x	x	x	Nine DMA channels, 64 Kbytes DRAM expandable to 192 Kbytes, 2 iSBX expansion connectors, RS232C on 6 channels.	iSBC188/48	Intel	
x	x	x	x	x	x	Sockets for interchangeable line drivers and terminators, programmable communications interface, single-level interrupt.	iSBC80/10B	Intel	
x	x	x	x	x	x	48 individually programmable parallel I/O lines. Available built to MIL883 Standard.	DCS8010A	DistComp	
x	x	x	x	x	x	For severe environmental operation conditions: -55°C to 85°C, 5 G vibration — 5 Hz to 2 kHz, 15 G shock — 11 ms, 0 to 95% humidity.	SECS80/10A	EMM-SESCO	5
x	x	x	x	x	x	Sockets for 8041/8741A interface, 12 levels of programmable interrupt control, RAM battery backup, Multimaster control.	iSBC80/30	Intel	
x	x	x	x		x	Two programmable 16-bit BCD and binary timers, eight-level programmable interrupt control, memory protected.	iSBC80/24	Intel	
x	x					Has both 8085 and 8088 processors, only one of which operates at a time. Optional battery-backed calendar clock, math chip.	8108	ETIMicro	
x	x	x	x	x	x	Includes CRT display controller and ASCII keyboard input port.	MC85	Comark	
x	x	x	x	x	x	Same as MC85-001 but also has 80x24 display controller and ASCII keyboard port	MC85-001	Comark	10
x	x	x	x	x	x	Real-time clock, parallel/serial bus arbitration	MC85-005	Comark	
					x	Accepts low-level signal down to 10 mV.	DT3754	DataTrans	
x	x		x	x		Seven CPU boards in series. DS board has math processor and 12 interrupt inputs.	AMSSeries	Siemens	
					x	For severe environmental operation conditions: -55°C to 85°C, 5 G vibration — 5 Hz to 2 kHz, 15 G shock — 11 ms, 0 to 95% humidity.	SECS80/30	EMM-SESCO	
					x	Has both 8085 and 8088 processors, only one of which operates at a time. Optional battery-backed calendar clock, math chip.	SECS80/544	EMM-SESCO	15
x	x	x	x	x	x	Four-channel communications computer or intelligent slave for communications expansion. Twelve levels of programmable interrupt control.	iSBC544	Intel	
x	x	x	x	x	x	Three sockets for distributed digital I/O processing, 12 levels of programmable interrupts, three programmable counters.	iSBC569	Intel	
x	x	x	x	x	x	Software-transparent to Intel SBL90/05, has three SBX connectors, fast-mode selection for CPU clock, needs ± 12V for RS-232.	ZX80/15	Zendex	
x	x	x	x	x	x	Hardware and software-compatible with Intel Series II IPC-85. Runs all development systems.	ZX85	Zendex	
x	x	x	x	x	x	Wire-wrappable kluge card in Multibus form-factor, except double height. Four 28-pin RAM/ROM sockets.	DCS-IWW/88	DistComp	20
	x			x	x	Intelligent communications controller. Can run an operating system for development of communications protocol.	DCS-SI08	DistComp	
x	x	x	x	x		See iSBC86/14. ROM/PROM expandable to 64K bytes with iSBC 341 Multimodule.	iSBC88/25	Intel	
x	x	x	x	x	x	Measurement and control computer. On-board A/D converter, 3 iSBX connectors, 3 programmable timers, 4 EPROM sockets.	iSBC88/40	Intel	
						12-bit 20KHz A to D converter with programmable gain, 16-different 1/32 single-ended analog, input channels, on-board 21V power supply for E² PROM modification.	88/40	MicroInds	
x	x	x	x	x	x	RAM, ROM, PROM sockets, wire-wrappable kluge card in multibus form factor, except double height.	DCS/IWW/8B	DistComp	25
	x			x	x	Intelligent communications controller. Can run an operating system for development of communications protocol.	DCS/SI08	DistComp	
x	x	x	x	x	x	Intended as coprocessor for DCS 86/16 or as 8-bit processor for Multibus systems. Three timers.	DCS86/8	DistComp	
x	x	x	x	x	x	Convertible to ZX-85. Runs CP/M-86.	ZX88	Zendex	
x	x	x	x		x	Hardware/software system designed for use as a remote unit for distributed data acquisition and control.	**MCC14**	**Wintek (2118)**	
x	x	x	x	x	x	Wire-Wrap area, FORTH or PASCAL.	BRICK-1	DYSYS	30
x	x	x	x	x	x	FORTH or PASCAL, real-time multitask operating system (optional).	BRICK-2	DYSYS	
x	x	x	x	x	x	FORTH or PASCAL, real-time multitask operating system (optional).	BRICK-3	DYSYS	
	x	x			x	One-megabyte address capability, memory-mapping RAM, byte-wide memory, on-card floppy disk interface, arithmetic processor and DMA.	DCM-1	Fairchild	

Bold face indicates additional data is provided on the page noted.

MICROCOMPUTER BOARDS (Cont'd)

General						I/O			Memory			
										Supplied/Extra Capacity		
Data Word Size (bits)	Instruction Word Size (bits)	CPU Type	Clock Frequency Min/Max (MHz)	Bus Type	Supply Voltage (V)	No. of Serial Ports	No. of Parallel Lines	Max. Baud Rate (kb/s)	Directly Addressable Words (Kbytes)	RAM (Kbytes)	(P)ROM (Kbytes)	DMA Capability
8	8-32	NSC800	2	Proprietary	±5	1	20	2.4	64	1.15/3	2/2	
8	16	TMS9995	12	Proprietary	5, −15	1	16	38.4	28	4/24	24/26	x
8	16	TMS9995	12	Proprietary	±5	1	16	50	64	64/0	64/0	
8	8	Z8	3.7	Proprietary	5	2	40		2	2/0	0/4	
8	8-32	Z80	2/4	Proprietary	±5, ±12	4	0	64	64	1	2	
8	8-32	Z80	2.457	Proprietary	5	1	16		64	16	0/4	
8	8-32	Z80	2.457	Proprietary	5	1	16		64	4	0/4	
8	8-32	Z80A	4	Proprietary	5, ±12	1	0	19.2	32	4/8	0/28	
8	8	Z80A	4	Proprietary	±16,8		24		64	2	6	
8	4-16	Z80A	4	Proprietary	5,12,28	1	32	9.6	64	16/64	1/14	x
8	8-32	Z80A	4	Proprietary	±5,12,28	1	64	9.6	64	64	7/7	
8	8-32	Z80A	4	Proprietary	5,12,28	1	36	9.6	64	64	7/7	x
8	8	8052	11	Proprietary	5, ±12	2	16	19.2	128	8/64	4/64	x
8	8-24	3850	2/4	Proprietary	5,12	2			4	4	6	
8	8	65C02	1	Proprietary	5	1	60	19	64	0/48	0/16	
8	8	6502	1/2	Proprietary	5	1	32	19.2	8	1/3	4/6	
8	8	6502	1	Proprietary	5	1	64	19	18	0/10	0/8	
8	8-24	6502	1	Proprietary		1	0		56	4/4	10	
8	8-24	6502	1	Proprietary	5	2	16		128	2	0/16	
8	8	6502	2	Proprietary	5	1	40	19	64	0/32	0/32	
8	8	6502	2	Proprietary	5	1	40	19	64	0/32	0/32	
8	8	6502	4	Proprietary	5	1	32	19.2	64	1/2	0/16	x
8	8-24	6800	1	Proprietary	5	1	40	19.2	64	1/2	0/32	x
8	8-24	6800	1	Proprietary	5, ±12	2	20	19.2	64	1/2	0/32	x
8	8-24	6800	1	Proprietary	5, ±12	1	40	19.2	64	1/2	0/16	x
8	8-24	6800	2	Proprietary	5	1	40	19.2	64	1/2	0/32	x
8	16	6802	1	Proprietary		1	32		64	1.4	0/16	
8	8-24	6802	1	Proprietary		1	40		64	0/2	0/8	
8	8-24	6802	1/2	Proprietary		0	0		64	0/4	0/32	
8	16	6809	1	Proprietary		2	4		64	0/8	0/12	x
8	8-24	6809	1	Proprietary		1	40		64	0/2	0/8	
8	8-24	6809	1/2	Proprietary	5, ±12	1	40	19.2	64	2	0/16	x
8	8-40	6809	1/2	Proprietary		0	0		64	0/4	0/16	
8	16	6809	1.5	Proprietary	5, ±12	1	32	19.2	64	1	0/16	
8	8	6809	4	Proprietary	5	1	32	19.2	64	1/2	0/16	
8	16	8X300	8	Proprietary	5		4			0.256		
8	16	80C85A	3	Proprietary	5	1	22		64	256	8	

Sequenced alphanumerically by data word size, CPU type, and increasing clock frequency.

Software Support					Hardware Support	Comments	Model	Source	Line
Assembler	Debug/ Monitor	Editor	High Level Language	Operating System					
	x	x				NSC800 evaluation board. Two 16-bit programmable counters/timers, RS232 interface, Wire Wrap area.	NSC888	National	
	x	x	x	x	x	Designed for industrial environment. Various combinations of RAM and EPROM.	CPU205	TauZero	
x	x	x	x	x	x	Double Eurocard. 64K total RAM and ROM.	CPU206	TauZero	
x	x	x	x	x	x	Development module for Z8 microcomputer.	Z8-SCB	Zilog	
				x	x	TTL-compatible serial ports with maximum baud rate of 9.6 kbits/s asynchronous, 64 kbits synchronous.	MM1-MSC	ContLogic	5
x	x	x	x	x	x	Baud rates are software programmable from 50 to 38.4 baud. 4 8-bit counter/timer channels, 128 vectored interrupts, complete bus buffering.	Z80MCB/16	Zilog	
x	x	x	x	x	x	See above.	Z80MCB/4	Zilog	
x	x	x	x	x	x		CCS-1143A	ContLogic	
x	x	x	x	x	x	Will operate standalone or on ICD bus.	ZPM-8	IndComp	
x	x	x	x	x	x	DMA based, multi-density floppy disk controller, 4 counter/timers, PROM programmer, CPU bus available for system expansion.	90F/MPS	Quay	10
x	x	x	x	x		PROM programmer, 4 counter/timer channels, CPU bus for expansion.	90MPS	Quay	
x	x	x	x	x		Complete floppy disk controller, single, double, or quad density and PROM programmer on board.	94/MPS	Quay	
	x		x			iSBX expansion, RPOM programmer, full floating-point BASIC, buffered expansion bus.	SIBEC-52BASIC	BinaryTech	
						Development board, F8/3870 cross assembler, MSDOS/PCDOS	XR38XX	Exar	
					x	RAM/EPROM amount—jumper selectable.	Cortex64Q	Cortex	15
x	x	x			x	Memory expandable to 32 Kb with MSB/02 board. In-circuit emulator permits program development on any 6502-based system. CMOS version available.	MMC/02	Brachman	
					x	On-board date and time clock, RAM/EPROM amount—jumper selectable.	64K/CMOS	Cortex	
x	x		x	x	x	Built-in Basic in ROM, machine code monitor, 1 cassette interface, video interface and full keyboard.	SuperboardII	OhioSci	
x	x	x	x		x	Card cage and variety of expansion boards available. Software can be developed with AIM 65. Available in Euroconnector or edge connector style.	RM65-1000	Rockwell	
					x	Support board available	64K/S	Cortex	20
					x		Cortex18	Cortex	
x	x	x	x		x	Provision for on-board power supply, buffers/terminators on parallel lines. RS232,422 or loop serial. Optional CMOS RAM.	CMC65/04	RCIData	
x	x	x	x		x	DMA controller, separate on-board/off-board buffers, field programmable gate array device, decode, 8-level vectored interrupt, controller.	CMC68/15	RCIData	
x	x	x	x		x	Communications version of CMC68/15.	CMC68/15C	RCIData	
x	x	x	x		x	IEEE 488(GPIB) interface, DMA controller, separate on-board, off board buffers, field programmable gate array device decode modem leads.	CMC68/15G	RCIData	25
x	x	x	x		x	2 MHz version of CMC68/15.	CMC68/15B	RCIData	
x	x	x	x		x	Possible complete microcomputer with on-board power supply and RS-422 communications adapter.	CMC68/04A	RCIData	
x	x	x	x				560	SBE	
x	x	x			x	Crystal-controlled clock, DMA, power-on reset, mapping PROM for on-board EPROM/RAM, 2 interrupts.	1020	SBE	
						On-board DMA controller, three 16-bit timers, automatic-power-fail restart.	DK6809	Digitek	30
x	x	x	x			Three programmable counter/timers. Crystal-controlled clock, 3 interrupts, power-on reset.	590	SBE	
x	x	x	x		x	Separate on-board, off-board buffers, field programmable gate array device decode, 3 channel timer, modem control leads, small wire wrap area.	CMC69/15	RCIData	
x	x	x			x	Crystal-controlled clock, DMA, power-on reset, mapping PROM for on-board EPROM/RAM, 3 interrupts.	1010	SBE	
x	x	x	x		x	Provision for on-board power supply, RS-422.	CMC69/04	RCIData	
x	x	x	x		x	Provision for on-board power supply, buffers/terminators on parallel lines, RS232, 422, or loop on serial. Optional CMOS RAM.	CMC69/04A	RCIData	35
					x	Single step control, instruction insertion from DIP switches, and Wire-Wrap development area.	8X300KT100SK	Signetics	
						Eight analog inputs, 14-bit counter/timer.	SCMT-11-C	Solarcom	

Bold face indicates additional data is provided on the page noted.

MICROCOMPUTER BOARDS (Cont'd)

General						I/O			Memory			
Data Word Size (bits)	Instruction Word Size (bits)	CPU Type	Clock Frequency Min/Max (MHz)	Bus Type	Supply Voltage (V)	No. of Serial Ports	No. of Parallel Lines	Max. Baud Rate (kb/s)	Directly Addressable Words (Kbytes)	Supplied/Extra Capacity		DMA Capability
										RAM (Kbytes)	(P)ROM (Kbytes)	
8	8	8031	7.3728	Proprietary	5, ± 12	1	16	19.2	128	8	8/64	
8	8	8031	7.3728	Proprietary	5, ± 12	1	16	19.2	128	8	8/64	
8	8	8031	11.0592	Proprietary	5, ± 12	1	16	19.2	128	8	8/64	
8	8	8031	12	Proprietary	5	1	4	1.2	128	2	4	
8	8	8032	7.3728	Proprietary	5, ± 12	1	16	19.2	128	8	8/64	
8	8	8032	7.3728	Proprietary	5, ± 12	1	16	19.2	128	8	8/64	
8	8	8032	11.0592	Proprietary	5, ± 12	1	16	19.2	128	8	8/64	
8	16	8085	3	Proprietary	5	1	22		64	256	8	
8	16	8085A	3	Proprietary	5	1	44		64	1.28	0/4	
8	8-16	8085A	5	Proprietary	5	1	0		64	0.256	0.256	x
8	8	Z80-B	6	QBus	5	1		250	64	64	2	
8	8/24	65C02	2/4	RM65	5				64	8/48	0/64	x
8	8-24	6502	1	RM65	5	2	52	19.2	128	16/48	4/32	
8	8	Z80A	4	SCSI	5	2	8	38.4	64	64	4	x
8	8	Z80A	4	SCSI	5	2	8	125	64	64	4-32	
8	8	Z80A	4	SCSI	5, ± 12	2	33	125	64	64	4/32	
8	16	80188	6/8	Slicer	5, ± 12	2	SASI	38.4	100	256	8/16	x
8	8	NSC800	1/2.5	STD	5	1			64			x
8	8	NSC800	2.5	STD	5, ± 12		22		64	0/8	0/32	
8	8-32	NSC-800	2	STD	5		22		64	0/24	0/24	x
8	8-32	Z80	2	STD	5, ± 15	1	16	4.8	64	2/64	8K	
8	8	Z80	2.5	STD	5, ± 12	2	20	19.2	128	16	48	x
8	8	Z80	2.5	STD	5, ± 12	2	24	19.2	128	16	48	x
8	8, 16	Z80	2.5	STD	5, ± 12	3	6	500	32	0/32	0/32	x
8	8, 16	Z80	2.5	STD	5, ± 12	3	6	500	32	0/32	0/32	x
8	8	Z80	2.5/4	STD	5		16		64	40	80	
8	8	Z80	2.5/4	STD	5, ± 12	2		19.2	64	24	48	
8	8	Z80	2.5/4	STD	5		16		64	40	80	
8	8, 16	Z80	2.5/4	STD	5				64	0/64	0/64	x
8	8, 16	Z80	2.5/4	STD	5				16	0/16	0/16	x
8	8, 16	Z80	2.5/6	STD	5, ± 12	1	16	76.8	32	0/32	0/32	x
8	8, 16	Z80	2.5/8	STD	5				64	0/64	0/64	x
8	8, 16	Z80	2.5/8	STD	5, ± 12	1	8	76.8	32	0/32	0/32	x
8	8, 16	Z80	2.5/8	STD	5, ± 12	1	4	76.8	32	0/32	0/32	x
8	16	Z80	2.5/6	STD	5, ± 12	0	0		64	0/2	0/4	x
8	8-32	Z80	4	STD	5, ± 15	1	16	9.6	64	2/64	8K	
8	8	Z80	4	STD	5, ± 12	2		19.2	128	0/32	0/64	
8	8, 16	Z80	4/6	STD	5, ± 12	3	6	800	32	0/32	0/32	x
8	8, 16	Z80	4/6	STD	5, ± 12	3	6	800	32	0/32	0/32	x
8	8-32	Z80A	2.5	STD	5	0	0		64	1/4	8	x
8	8	Z80A	2.5/4	STD	5, ± 12	1		0.48	64	0/32	0/32	x

Sequenced alphanumerically by data word size, CPU type, and increasing clock frequency.

MASTER SELECTION GUIDE

Software Support									
Assembler	Debug/ Monitor	Editor	High Level Language	Operating System	Hardware Support	Comments	Model	Source	Line
	x		x			Tiny BASIC/monitor debugger, 2 counter/timers, buffered expansion bus.	SIBEC-51B	BinaryTech	
	x		x			Tiny BASIC/monitor debugger, 2 counter/timers, buffered expansion bus, 2K EEPROM.	SIBEC-51C	BinaryTech	
	x		x			Tiny BASIC/monitor debugger, 2 counter/timers, buffered expansion bus.	SIBEC-51A	BinaryTech	
x	x	x				Based on the 8031 (ROMless 8051). Serial Port RS-232C buffered.	FX-31	AllenSys	
	x		x			Tiny BASIC/monitor debugger, 2 counter/timers, buffered expansion bus.	SIBEC-52B	BinaryTech	5
	x		x			Tiny BASIC/monitor debugger, 2 counter/timers, buffered expansion bus, 2K EEPROM.	SIBEC-52C	BinaryTech	
	x		x			Tiny BASIC/monitor debugger, 2 counter/timers, buffered expansion bus.	SIBEC-52A	BinaryTech	
						Eight Analog inputs, 14 bit counter/timer.	SCMT-11	Solarcom	
	x					256 bytes of CMOS RAM battery backup. SMP-80 is Eurocard version.	SKC-85	Siemens	
					x	Milertronics will do programming and interfacing, if desired.	PDC-102	MilerTron	10
x	x	x	x	x	x	Allows DEC LSI-11 and PDP-11 (QBus) computers to execute CP/M-80 programs from any terminal on the DEC system. RS232C serial port includes a control program resident to the native DEC operating system to handle I/O request	QCP-11	Logicraft	
x	x	x	x	x	x	Supported by Rockwell's development systems. Higher level languages include BASIC, FORTH, PLM.	GE65C02	Golden	
x	x	x	x		x	Industrial, laboratory, and test equipment applications. Graphics printer and display module available.	A65/40-1000	Rockwell	
x	x	x	x	x		On-board floppy controller, mounts directly on 5 1/4-inch floppy, CP/M included.	Little Board	Ampro	
x	x	x	x	x	x	Same as Model 1A but with SCSI bus interface for multi-master I/O expansion and hard disk support.	Little Board/ PLUS	Ampro	15
x	x	x	x	x	x	Same size as 5 1/4 inch floppy drive. Mounts directly on it.	LittleBoard/80	Ampro	
x	x	x	x	x	x	Stand-alone single board computer.	SL188	Slicer	
	x			x	x	STD/Z80 Compatible Timing	CMOS-CPU	Intelicom	
					x	Slave processor for STD. Bus. Z80 code compatible. Has I/O plug-in socket for specific I/O requirements.	SB8275	MicroSys	
x	x	x	x	x	x	Battery backed up calendar clock, watchdog timer, three 16-bit counter/timers and three 28-pin memory sockets.	LPM-CPU3-2	WinSystems	20
	x				x	On-board DART, CTC and PIO, selectable baud rates, 4 counter/timers.	MS1002	Eltec	
			x	x		Parallel port with Z80 PIO FIG-FORTH Monitor.	MIE-300	Mitchell	
			x	x		On board IEEE 488 controller, talker, listener, FIG-FORTH monitor.	MIE200	Mitchell	
x	x	x	x	x	x	Triple DART, RS-232	05324-01	STDMicro	
x	x	x	x	x	x	Triple SIO, RS-232	05324-11A	STDMicro	25
	x					Programmable wait-state generator, 4 counter timer channels.	DSTD-101	DY-4	
	x					Programmable wait-state generator daisy chain interrupt capability 4 independent programmable interval timers.	DSTD-102	DY-4	
	x					Programmable wait-state generator, 4 buffered counter timer channels, slave operation.	DSTD-103	DY-4	
x	x	x	x	x	x		05310	STDMicro	
x	x	x	x	x	x		05320	STDMicro	30
x	x	x	x	x	x	PIO with serial SBC	05323	STDMicro	
x	x	x	x	x	x		05321	STDMicro	
x	x	x	x	x	x	Centronics port	05322	STDMicro	
x	x	x	x	x	x	DMA with RS-232	05326	STDMicro	
	x			x	x	Two I/O ports are occupied by on-board functions, one of which is a DMA controller.	ST4101	Burr-Brown	35
	x				x	On-board DART, CTC and PIO, selectable baud rates, 4 counter/timers.	MS1004	Eltec	
x	x	x	x	x	x	Single board controller	MF80	Matrix	
x	x	x	x	x	x	Triple DART, RS-232	05324-02/3	STDMicro	
x	x	x	x	x	x	Triple SIO, RS-232	05324-12/13A	STDMicro	
	x				x	Optional external clock input. Three state bus drivers may be disabled for DMA observation. Single +5v operation. Addressable expansion to 116 kbytes.	7803A	Pro-Log	40
x	x	x	x	x	x	Four JEDEC memory sockets, serial port, 4-channel counter/timer.	SB8010	MicroSys	

Bold face indicates additional data is provided on the page noted.

MICROCOMPUTER BOARDS (Cont'd)

General						I/O			Memory			
Data Word Size (bits)	Instruction Word Size (bits)	CPU Type	Clock Frequency Min/Max (MHz)	Bus Type	Supply Voltage (V)	No. of Serial Ports	No. of Parallel Lines	Max. Baud Rate (kb/s)	Directly Addressable Words (Kbytes)	Supplied/Extra Capacity RAM (Kbytes)	Supplied/Extra Capacity (P)ROM (Kbytes)	DMA Capability
8	8-32	Z80A	2.5/4	STD	5	0	0		64	8	32	x
8	16	Z80A	2.5/6	STD	5, ± 12	1	24	9.6	64	0/2	0/6	
8	8	Z80A	4	STD	5, ± 12	2	16	19.2	64	0/8	0/32	x
8	8-32	Z80A	4	STD	5	1	24	56	64	16/64	0/32	x
8	8	Z80A	4	STD	5, ± 12	2	24	19.2	128	16	48	x
8	8	Z80A	4	STD	5, ± 12	2	20	19.2	128	16	48	x
8	8	Z80A	4	STD	5	2	0	19.2	64	0/64	0/128	
8	8-32	Z80A	4	STD	5	0	0		64	2	8	x
8	8-32	Z80A	4	STD	5, ± 12	2		19.2	64	64/64	0/16	x
8	8-32	Z80A	4.0	STD	5,12	8	24	56	64	64	16	x
8	8	Z80A	6.0	STD	5		40		64	1	2	
8	8-32	Z80C	2.5,4	STD	5				64	0/24	0/64	x
8	8-32	Z-80	2.5	STD	5, ± 12				64	0/24	0/64	x
8	8-32	Z-80	2.5/4	STD	5, ± 12				64	0/16	0/24	x
8	8-32	Z-80	4	STD	5, ± 12	2		9.6	64	64/0	0/8	x
8	8-32	Z-80	4	STD	5, ± 12	2	20	9.6	64	64/0	0/16	x
8	8-32	Z-80	4	STD	5, ± 12	2	20	9.6	64	0/24	0/64	x
8	8-32	Z-80A	4	STD	5	1		4.8	128	2/14	1/8	
8	8-32	Z-80A/B	2.5/6	STD	5, ± 12	2		38.2	128	0/128	0/128	x
8	8-32	Z-80A/B	2.5/6	STD	5, ± 12	1	11	38.2	128	0/128	0/128	x
8	8-32	Z-80A/B	2.5/6	STD	5, ± 12	2		500	128	0/128	0/128	x
8	8-16	280	4,6	STD	5, ± 12	2		19.2	256			x
8	8-16	280A	2,4,6	STD	5, ± 12				128		28	
8	8-24	6502	0.92/1.84	STD	5, ± 12	2	20	19.2	64	0/40	0/40	x
8	8	6502	1	STD	5, ± 12	3	16		64	8	8	
8	8	6502	2	STD	5	0	72		64	8/56	8/56	
8	8	6502	2	STD	5	0	72		64	8/56	8/56	
8	8	6502	2	STD	5, 12	1	56	19.2	64	8/56	8/56	
8	8	6502	2	STD	5, 12	1	56	19.2	64	8/56	8/56	
8	8	6502	2	STD	5	2	0	19.2	64	8/56	8/56	
8	8	6502	2/4	STD	5	1	32	19.2	128	2/48	0/48	x
8	8-24	68ATX	1	STD	5, ± 12	2	20	19.2	64	2/40	8/40	x
8	8	68B09	2	STD	5		8		64	2	34	
8	16	6800	1	STD	5	0	0		64	0/2	0/8	
8	8-24	6800	1/2	STD	5, ± 12	2	20	19.2	64	2/40	8/40	x
8	8-24	6800	4	STD	5	0	0		64	1/4	8	x
8	8	68008	8	STD	5, ± 12	2			1MB	16	32	
8	8-20	68008	8,10	STD	5, ± 12	2		19.2	1MB	64	64	x

Sequenced alphanumerically by data word size, CPU type, and increasing clock frequency.

Software Support									
Assembler	Debug/ Monitor	Editor	High Level Language	Operating System	Hardware Support	Comments	Model	Source	Line
	x				x	Counter/timer with 6 channels, 2 frequency options single +5v operation, DMA compatibility to memory, compatible with all Z80 interrupt modes.	7804	Pro-Log	
	x			x	x	Commercial and industrial packaging option available with PC backplane. Expandable I/O system for communications, display and control.	ST4102	Burr-Brown	
x	x	x	x	x	x	2 JEDEC memory sockets, 2 serial ports, 2 parallel ports, 4-channel counter/timer, battery-backed clock calendar.	SB8020	MicroSys	
	x		x		x	Memory mapping and I/O expansion line, programmable serial port.	MCPU-800	Miller	
			x	x		On board IEEE 488 controller, talker, listener, FIG-FORTH monitor.	MIE-200A	Mitchell	5
			x	x		Parallel port with Z80 PIO FIG-FORTH Monitor.	MIE-300A	Mitchell	
	x			x	x	Z80A-DART and Z80A-CTC provide two RS-232C and four counter/timer channels.	7806	Pro-Log	
	x				x	10 msec. timer w/ interrupt capability. DMA compatibility to external memory. Compatible with Z80 interrupt modes. Addressable exp. to 128 kbytes.	7880	Pro-Log	
x	x	x	x	x	x	Four cascadeable counter/timers, two serial RS-232 channels and a 28-pin memory socket.	MCM-SBC4	WinSystems	
x	x	x	x	x	x	On board floppy disk controller handles four drives, memory mapping, reset interrupt.	MCPU-900	Miller	10
						STD Bus Intelligent Parallel I/O.	ST4394	Burr-Brown	
x	x	x	x	x	x	CMOS Z80 processor card, four counter/timer channels and 6 bytewide memory sockets.	LPM-CPU2-A	WinSystems	
x	x	x	x	x	x	CMOS board. Four cascadable counter/timers, 6 memory sockets.	LPM-CPU2-A	Ziatech	
x	x	x	x	x	x	Includes four cascadable counter/timers and six memory sockets. Compatible with Mostek's MDX-CPU2.	MCM-CPU2	WinSystems	
x	x	x	x	x	x	On-board floppy-disk controller for 5 1/4" or 8" drive, four cascadable counter/timers and two RS-232 serial ports with modem controls.	MCM-SBC	WinSystems	15
x	x	x	x	x	x	Two 20-mA opto-isolated or RS-232 serial channels with modem controls. Also four cascadable counter/timers, 20 TTL compatible I/O lines.	MCM-SBC2	WinSystems	
x	x	x	x	x	x	Two 20-mA opto-isolated or RS-232 serial channels with modem controls	MCM-SBC3	WinSystems	
	x		x	x	x	Supports C4 BASIC and NOVOS (Non-volatile operating system) for in-system program development.	Z80-1	VersaLogic	
	x		x	x	x	Supports C4 BASIC ad NOVOS for in-system program development.	VL7806	VersaLogic	
	x		x	x	x	Supports C4 BASIC and NOVOS for in-system program development.	VL7807	VersaLogic	20
	x		x	x	x	Supports C4 BASIC and NOVOS for in-system program development.	VL7842	VersaLogic	
	x		x	x	x		ACS-80	Datricon	
					x	Interchangeable w/mostek MDX-CPUZA, but with re-worked reset circuit and 28-pin sockets.	ACS-2A	Datricon	
x	x	x	x	x	x	Primary serial port is RS232, secondary is TTL simplex. Two 16-bit timer-counters.	ACS15/65	Datricon	
	x						CPU-100	Techno	25
x		x	x	x	x		7510	Cubit	
x		x	x	x	x	CMOS version of 7510	7520	Cubit	
x		x	x	x	x		7530	Cubit	
x		x	x	x	x	CMOS version of 7530	7540	Cubit	
x		x	x	x	x	Includes integral color graphics CRT Controller and Floppy Disk Controller	7550	Cubit	30
x	x		x	x	x	Mixed RAM, ROM sockets 1 serial port, 2 parallel ports and 4 timers. Power fail interrupt and memory protection circuitry allow CMOS RAM to be battery backed.	10812	Enterprise	
			x	x	x	6801 instruction set. Primary serial port is RS232, secondary is TTL simplex. Two 16-bit timer-counters on board.	ACS14/64	Datricon	
	x					Floating point processor, on-board ± 15V power supply.	ST4603	Burr-Brown	
x	x	x	x			Fuse-link PROMs used for memory, I/O and DMA control.	ACS/68	ApplSys	
			x	x	x	Primary serial port is RS232, secondary is TTL simplex. Two 16-bit timer-counters.	ACS-12	Datricon	35
x	x		x		x	Optional external clock input. Tri-State bus drivers may be disabled for DMA operation. Programmable memory for I/O.	7802	Pro-Log	
	x					Transparent dynamic ram refresh, 3 counter/timer channels, software controlled shadow on-board memory.	DSTD-168	DY-4	
	x		x	x	x	Battery-backed clock, internal 16-bit counter, I/O device decoding compatible with 68000, interrupt vectoring compatible with 280 peripherals	ACS-68sBC	Datricon	

Bold face indicates additional data is provided on the page noted.

MICROCOMPUTER BOARDS (Cont'd)

General						I/O			Memory			
										Supplied/Extra Capacity		
Data Word Size (bits)	Instruction Word Size (bits)	CPU Type	Clock Frequency Min/Max (MHz)	Bus Type	Supply Voltage (V)	No. of Serial Ports	No. of Parallel Lines	Max. Baud Rate (kb/s)	Directly Addressable Words (Kbytes)	RAM (Kbytes)	(P)ROM (Kbytes)	DMA Capability
8	8	6801	2	STD	5, ± 12	1	24	9.6	64	0/8	0/32	
8	8	6802	2	STD	5			19.2	64	4/2	0/8	x
8	16	6803	−4.9	STD		1	24	38.4	64	2	0/4	
8	8-24	6809	1/2	STD	5, ± 12	1	0	19.2	64	4/40	8/40	x
8	16	6809	1/2	STD	5	1	0	38.4	128	0/8	0/32	
8	8	6809	2	STD	5				128	0/32	0/64	x
8	8	6809	2	STD	5, ± 12	2		19.2	128	0/32	0/64	x
8	8	6809	2	STD	5, ± 12	2	30	19.2	128	0/24	0/48	x
8	8-32	6809	4	STD	5	0	0		64	2	8	x
8	8	6809	4/8	STD	5	1	32	19.2	128	2/48	0/48	x
8	8	68701	2	STD	5, ± 12	1	24	9.6	64	0/8	0/32	
8	8,16	80C32	5	STD	5, ± 12	2		19.2	1028		0/16	x
8	8-16	80C85	6.2	STD	5	1		9.6	64	0/32	0/64	x
8	16	80C85A	3	STD	5	1	22		64	256	8	
8	16	80188	5/8	STD	5				1Mb	0/32	0/64	x
8	8	8085	3.072	STD	5, ± 12	2	2	56/4.8	64	1/1	0/8	
8	16	8085A	0.5/5	STD	5	1	0	19.2	64	0.25/2	0/8	
8	8-24	8085A	3/3.125	STD	5	1	0		64	1/4	8	x
8	8-24	8085A	6.144	STD	5	1	0	9.6	64	2	8	x
8	16,32	8088	4.7	STD	5				64	2/64	2/128	x
8	8,16	8088	5	STD	5, ± 12	2		19.2	1Mb	0/0	0/16	x
8	16	8088	5	STD	5, ± 12	1	16	19.2	1Mb	0/32	0/64	
8	16	8088	5	STD	5, ± 12	1		56	1Mb		0/64	
8	8	8088	5/8	STD	5, ± 12	2			1Mb			
8	8	8088	5/8	STD	5, ± 12	2			1Mb	16	32	
8	1	8088	5/8	STD	5, ± 12	1	16	19.2	1MB	0/8	0/32	x
8	16	8088	5/8	STD	5				1Mb		0/16	
8	16	8088	8	STD	5, ± 12	1	16	19.2	1Mb	0/32	0/32	
8	16	8088	8	STD	5, ± 12	1	16	19.2	1Mb	0/32	0/32	
8	8	Z80A	4	STD/SCSI	5				64	to 64	to 64	
8	8-32	62801	4	STDbus	5, ± 12	4		512	64	0/24	0/64	x
8	16	8085	3	STDbus	5	1	22		64	256	8	
8	8-16	8085	6.2	STDbus	5	1		9.6	64	0/32	0/64	x
8	8-32	Z80	2.5	STD-Z80	5				64			
8	8-32	Z80	2.5/8	STD-Z80	5				64	0.256	0/4	
8	8-24	Z80	2.5/4	STD-Z80	5				128	0/16	0/16	x
8	8-24	Z80	2.5/6	STD-Z80	5	1	16	76.8	128	0/32	0/32	x
8	8-24	Z80	2.5/6	STD-Z80	5	3		76.8	128	0/32	0/32	x

Sequenced alphanumerically by data word size, CPU type, and increasing clock frequency.

MASTER SELECTION GUIDE

Software Support									
Assembler	Debug/ Monitor	Editor	High Level Language	Operating System	Hardware Support	Comments	Model	Source	Line
						Single board controller	CP1	Matrix	
						6800 Replacement	CP2	Matrix	
	x						7911CP3	Matrix	
x	x	x	x	x	x	Software support is OS9 or Sphere. Serial port is RS232 or RS422 with modem control.	ACS-09	Datricon	
	x						7911SP9	Matrix	5
x	x	x	x	x	x		CP9	Matrix	
x	x	x	x	x	x		MF9	Matrix	
x	x	x	x	x	x	Disk based systems CPU	TS9	Matrix	
					x	10 msec. timer w/ interrupt control. DMA control to external memory. Dynamic RAM refresh clock. Single +5v operation.	7889	Pro-Log	
x	x		x	x	x	Mixed RAM, ROM sockets 1 serial port, 2 parallel ports and 4 timers. Power fail interrupt and memory protection circuitry allow CMOS RAM to be battery backed.	10809	Enterprise	10
						Single board controller	CP701	Matrix	
x	x				x	CMOS 8088 card, two RS-232 or opto isolated 20 mA serial ports, three 16-bit counter/timers.	LPM-8088-5	WinSystems	
x	x	x	x	x	x	CMOS, four 28-pin bytewide sockets. Equivalent to Pro-Log 78C05 and 78C15 processors.	LPM-7815	WinSystems	
						Eight analog inputs, 14-bit counter/timer.	SCMT-85-C	Solarcom	
	x				x	2 DMA on-board	ZT8814/8815	Ziatech	15
	x				x	Complete STD system with 8085, 2-RS-232C, GPIB controller	ZT7805	Ziatech	
x	x	x	x		x	Memory and peripheral I/O cards are available for systems.	ACS/80	ApplSys	
x	x		x		x	Optional external clock input. Tri-State bus drivers may be disabled for DMA operation. Addressabel words expandable to 116K bytes.	7801	Pro-Log	
	x				x	10 msec. timer w/ interrupt control. Control port for memory expansion. RS232C interface for CRT terminal. Selectable DTE/DCE configuration.	7885	Pro-Log	
						Supports memory battery backup.	SCMT-88	Solarcom	20
x	x				x	Two 20-mA opto-isolated or RS-232 serial channels with modem controls, three counter/timers plus interrupt controller.	MCM-8088-5	WinSystems	
	x				x	Compatible with the 8087 numeric data processor, optional debugging monitor PROM.	ZT8806	Ziatech	
	x				x	Optional development monitor, 8087 numeric data processor and 8-MHz version.	ZT8810	Ziatech	
	x					Transparent dynamic ram refresh, 2 independently controlled baud rate generators, software controlled shadow memory.	DSTD-187	DY-4	
	x					8087 math co-processor socket, transparent dynamic ram, refresh, software controlled shadow memory.	DSTD-188	DY-4	25
x	x		x	x	x	8088, optional 8087, serial, parallel, timer, interrupt I/O, Link to IBM-PC.	SB8088	MicroSys	
	x			x	x	Integrated 8088 Processor. Optional development/monitor PROM, optional 8087 numeric data processor, optional IRMX-86 or CP/M-86 silicon operating system.	ZT8812/8813	Ziatech	
	x				x	Intelligent OEM Serial Controller. On-board 8MHz 8088 slave CPU, serial port for RS-232C or RS-449, multimodule expansion socket.	ZT8830	Ziatech	
	x				x	On-board 8-MHz 8088 slave CPU	ZT8831	Ziatech	
x	x	x	x	x	x	STD bus form factor, 8 byte-wide sockets, CTC, SCSI (full ANSC X3T9.2), STD interrupt structure	SCSI/IOP-STD	Ampro	30
x	x	x	x	x	x	Uses Hitachi 68201 (Z-80-equivalent) processor; 4 serial I/O channels, Two 16-bit timers, watchdog timer, three 28-pin sockets, DMA	MCM-SBC5	WinSystems	
						Eight Analog inputs, 14 bit counter/timer.	SCMT-85	Solarcom	
x	x	x	x	x	x	Four 28-pin bytewide sockets. Equivalent to the Pro-log 7805 and 7815 processors.	MCM-7815	WinSystems	
x	x	x	x	x	x	Six 24 pin sockets, four cascadable counter/timer channels, automatic, transparent dynamic memory refresh.	MDX-CPU2A	Mostek	
x	x	x	x	x	x	Flexible memory decoding for EPROM and RAM, four counter/timer channels. CPU1A allows system reset to be generated off the board.	MDX-CPU1	Mostek	35
						On-board CTC.	5320	STDMicro	
						General-purpose parallel interface, programmable baud rate.	5323	STDMicro	
						Three synchronous/asynchronous serial channels, programmable baud rate.	5324	STDMicro	

Bold face indicates additional data is provided on the page noted.

MICROCOMPUTER BOARDS (Cont'd)

General						I/O			Memory			
										Supplied/Extra Capacity		
Data Word Size (bits)	Instruction Word Size (bits)	CPU Type	Clock Frequency Min/Max (MHz)	Bus Type	Supply Voltage (V)	No. of Serial Ports	No. of Parallel Lines	Max. Baud Rate (kb/s)	Directly Addressable Words (Kbytes)	RAM (Kbytes)	(P)ROM (Kbytes)	DMA Capability
8	8-24	Z80	2.5/8	STD-Z80	5				128	0/64	0/64	x
8	8-24	Z80	2.5/8	STD-Z80	5	1	16	76.8	128	0/32	0/32	x
8	8-24	Z80	2.5/8	STD-Z80	5	1		76.8	128	0/32	0/32	x
8	8-24	Z80	2.5/8	STD-Z80	5	1		76.8	128	0/32	0/32	x
8	8-24	Z80	2.5/8	STD-Z80	5	1		76.8	128	0/32	0/32	x
8	8-32	Z80A	3.68	STD-Z80	5,12	1	8	9.6	64	64	0/32	x
8	8-32	Z80A	3.68	STD-Z80	5,12	1	8	9.6	64	0/40	0/64	x
8	8	Z80-B	6	S100	8	2	16	19.2	64	128	2	x
8	16	8088	5	S100	5, ± 12	2	8	819	1024	64/1024	4/0	
8	8	Z80	2/4	S-100	8				64	0	0	
8	8	Z80	4	S-100	8, ± 18	1	24		64	1	0/8	
8	8-32	Z80A	4	S-100	8	1			64	64	0.032	
8	8-32	Z80A	4	S-100	8	2		9.6	64	96	0.032	
8	8-32	Z80A	4	S-100	8, ± 16	2		19.2	64	64	2/32	x
8	8-32	Z80A	4	S-100	8, ± 16	2	20	19.2	64	64	2/32	x
8	8-32	Z80A/B	4/6	S-100	8, ± 16	2	20	19.2	64	64/128	2/32	x
8	8-32	Z80B/H	6/8	S-100	8, ± 16	2	20	19.2	64	64/128	2/32	x
8	8	Z80B	4.77	TIPROF	5				64	64		
8	8	Z-80B (3)	6	Unibus	5	3		250	64(3)	64(3)		
8	8	Z80	4/6	VMEbus	5, ± 12	4	16	38.4	64	64	2	
8/16	8	INS8073	4		5	1	27	4.8	64	2	0/4	
8/16	8	INS8073	4		5	1	51	4.8	64	4	0/8	
8/16	8,16	8088	4	IBMPC	5, ± 12	2	1	9.6	64	64	2/64	x
8/16	8,16	8088	4	IBMPC	5, ± 12	2	1	9.6	128	128	2/64	x
8/16	8,16	8088	4	IBMPC	5, ± 12	2	1	9.6	256	256	2/64	x
8/16	16	68000	12.5	Multibus	5		32		8Mb		0/128	
8/16	8-32	80186	8	Multibus	5	2	24	125	1MB	32/64	128/256	x
8/16	16	80186	8	Multibus	5, ± 12	8		880	512		25	x
8/16	16	80186	8	Multibus	5, ± 12	4		880	512		25	x
8/16	8,16	80186	8	Multibus	5, ± 12	1 or 2	24	19.2	16Mb	512/1Mb	0/128	x
8/16	8-40	80286	8	Multibus	5	2	24		615	0/128	0/256	
8/16	8-40	80286	8	Multibus	5	2	24		615	1MB/1MB	0/256	x
8/16	8/16	8085/88	5	Multibus	5	4	1	9.6	1MB	128	128	x
8/16	8-32	8086	5/8	Multibus	5	1	24	38.4	1MB	512/1MB	32/256	
8/16	8-32	8086	5/10	Multibus	5, ± 12	1	24	38.5	16Mb	128/256	0/256	x
8/16	8-32	8086	5/10	Multibus	5, ± 12	1	24	38.4	16Mb	512/1Mb	0/256	x
8/16	8,16	8086	5/10	Multibus	5, ± 12	1	24	19.2	1024	1024	256	x
8/16	8-32	80186		Multibus II	5,12					128	128	x
8/16	8-40	80286	8	Multibus II	5, ± 12	2	24	19.2	16MB	1MB	128	x
8/16	8-40	80286	8	Multibus II	5, ± 12	2	24	19.2	16MB		128	x
8/16	8, 16	INS8070	5	STD	5	2		19.2	96	8/32	16/32	
8/16	8, 16	INS8070	10	STD	5	1	24	9.6	84	2/8	8/24	

Sequenced alphanumerically by data word size, CPU type, and increasing clock frequency.

MASTER SELECTION GUIDE

Software Support										
Assembler	Debug/ Monitor	Editor	High Level Language	Operating System	Hardware Support	Comments	Model	Source	Line
						On-board CTC.	5321	STDMicro	
						Centronics interface, programmable baud rate.	5322	STDMicro	
						Clock/calendar, programmable baud rate.	5327	STDMicro	
						IEEE488 GPIB, programmable baud rate.	5328	STDMicro	
						9511 arithmetic processor, 9512 floating-point processor, programmable baud rate.	5329	STDMicro	5
x	x	x	x	x	x	Modem, eight parallel lines plus handshake.	MDX-CPU3	Mostek	
x	x	x	x	x	x	Modem, eight parallel lines plus handshake.	MDX-CPU4	Mostek	
				x	x	Five- and 8-inch floppy disk controller, 64K or 128K of RAM, 2K or 4K of ROM.	Super 6	AdvDigital	
x	x	x	x	x	x	User Board	DPC-88U	ACE	
x	x	x	x	x	x	CPU card.	ZPU	Cromemco	10
x	x	x	x	x	x	Five programmable timers, 110 to 76,800 baud serial port.	SCC	Cromemco	
				x	x		DPC-180	ACE	
				x	x	Designed for integration into a multiprocessor multiuser microprocessor system for low-cost CP/M Plus performance.	DPC-83U	ACE	
x	x	x		x	x	Two-user slave card, each user with his own CPU memory and I/O.	SBC-II	Teletek	
x	x	x		x	x	Able to function as the system controller in a multi-user multi-processing Turbo DOS system.	Systemaster	Teletek	15
x	x	x		x	x	Single-user slave board intended for use in a multi-user multi-processing environment.	SBC-I	Teletek	
x	x	x		x	x	Parallel ports may be converted to IEEE 488 or SCSI interface.	SystemasterII	Teletek	
				x		CP/M Co-processor.	FG-112	Microlog	
x	x	x	x	x	x	Has one or three Z-80-B microprocessors, each having 64K RAM and an RS-232 compatible interface channel. Enables DEC PDP-11 and VAX computers access to CP/M-80. CP/M and DEC programs can run simultaneously.	UCP-11	Logicraft	
						Centronics printer post, 48 KB bank switch up to 16 MB VMEbus memory.	AC-V10	Astraea	20
	x	x	x		x	Low-cost, 3x4-inch board. Includes real time clock/calendar, tiny basic.	MC-1N	Basicon	
	x	x	x		x	Same as MC-1N with extra RAM, EPROM and I/O.	MC-2N	Basicon	
x	x	x	x	x	x	IBM PC/XT compatible, on-board video and floppy controllers, RAM expandable to 640K, 8087 socket	DPC-1064	Davidge	
x	x	x	x	x	x	IBM PC/XT compatible, on-board video and floppy controllers, RAM expandable to 640K, 8087 socket	DPC-112B	Davidge	
x	x	x	x	x	x	IBM PC/XT compatible, on-board, video and floppy controllers, RAM expandable to 640K, 8087 socket	DPC-1256	Davidge	25
	x		x			Sun memory management 8Mb Multibus address space.	B1034	CentData	
x	x	x	x	x	x		iSBC186/03A	Intel	
	x			x		Includes CPU, RAM, serial I/O, ethernet controller and VRTX real-time operating executive.	CP-2000	Matrox	
	x			x		Includes CPU, RAM, serial I/O, Floppy disk controller and VRTX real-time operating executive.	FP-2000	Matrox	
x	x	x	x	x	x	Can contain 128Kb, 512Kb or 1Mb on-board RAM. Optional 8087 floating point processor. Optional multi-protocol dual serial interface controller.	ZX186/30	Zendex	30
x	x	x	x	x	x	Zero-wait-state dual-port memory interface. Reconfigurable to support up to 640 KB EPROM.	iSBC286/10A	Intel	
x	x	x	x	x	x	1 MB, zero-wait-state parity RAM and zero-wait-state memory interface	iSBC286/12	Intel	
x	x	x	x	x	x	Dual processor with 3iSBX connectors.	V8003	Century	
x	x	x	x	x	x	512K byte on-board dual-port RAM.	iSBC86/35	Intel	
x	x	x	x	x	x	Two SBX Connectors; Optional 807 numeric data processor.	CD21/8630	CentData	35
x	x	x	x	x	x	Two SBX Connectors; Optional 8087 numeric data processor.	CD21/8635	CentData	
x	x	x	x	x	x	Two 16-bit SBX connectors, 8087/8089 support	MC8630/35	Comark	
				x	x	Multibus II peripheral controller	iSBC186/224	Intel	
x	x	x	x	x	x	Complete integrated system, maximum baud rate 64 kb/s synchronous, also iLBX-II bus.	SYSMB2	Intel	
x	x	x	x	x	x	Max. baud rate 64 kb/s synchronous, also iLBX-II bus.	iSBC286/100	Intel	40
x	x	x	x		x	Similar to SYS-10A with 2 serial ports. One port has full modem handshake capability.	SYS-11	Octagon	
x	x	x	x		x	Similar to SYS-10A with Battery backable RAM. 8 channels of 8 bit A/D and 1 channel of D/A.	Omnicard	Octagon	

Bold face indicates additional data is provided on the page noted.

MICROCOMPUTER BOARDS (Cont'd)

General						I/O			Memory			
										Supplied/Extra Capacity		
Data Word Size (bits)	Instruction Word Size (bits)	CPU Type	Clock Frequency Min/Max (MHz)	Bus Type	Supply Voltage (V)	No. of Serial Ports	No. of Parallel Lines	Max. Baud Rate (kb/s)	Directly Addressable Words (Kbytes)	RAM (Kbytes)	(P)ROM (Kbytes)	DMA Capability
8/16	8-32	8088	5	STD	5, – 12	1		9.6	1MB	32	2/48	x
8/16	8-32	8088	5	STD	5, – 12	1		9.6	1MB	4/8	2/48	x
8/16	8-32	8088	5	STD	5, – 12	1		9.6	1MB	8/32	2/48	x
8/16	8, 16	8088	15.36	STD	5	2	16	19.2	128	8/16	16/48	
8/16	16	Z80/80186	4/8	S100	5, ± 12	2	8/16	819	1024	128/1024	1/16	x
8/16	8-40	80286	6	Multibus		2	24	615	1Gb	48	256	
8/16	8-32	8088	8	Multibus	5, ± 12	3		800	1MB	16	64/64	x
8/16	8,16	INS8073	4	Proprietary	5	1	24	4.8	64	4	2/6	
8/16	8,16	INS8073	4	Proprietary	5	1	19	4.8	64	4	2/6	
8/16	8,16	INS8073	4	Proprietary	5	1	47	4.8	64	4/24	4/22	
8/16	8,16	INS8070	4	STD	5	1	0	4-8	64	2/8	2/24	
8/16	8-32	8088	5	STD	5	1			1MB	218	0/16	
8,16	8,16	80186	6/8	S-100	8, ± 16	1		9.2	16MB	128/256	64	x
8-32	16-80	68000	8	VME	5	1	16			128/512	0/64	x
8-32	16-80	68000	8	VME	5, 12	1	8	19.2	1MB	12	16	x
8-16	8	F387X	2	F8		1			64	2/4	2	
12	12	6100	0/2	Proprietary	4.5-7	0	18		384	0	0	
12	12	6100	0/2.46	Proprietary	4.5-7	0	32		48	4	12	x
12	12	6100	5.7	Proprietary	4.5-7	1	24	9.6	4	0.256	1/1	x
16	16	Z8002	4		5, ± 12	2	40	1000	64	8/56	0/56	
16	16	8097	12		5, ± 12	2	48	19.2	48			
16	8-32	68000	8	EXORciser	5, ± 12	2	32	9.6	16MB	32	8/64	
16	16	Z8001	4	FlexibusIII		2	0		100K	20	16	
16	16	F11		LSI-11					2M	0/4M	0/4M	
16	32	68000	12	LSI-11	5, ± 12	2		19.2	4MB	4MB		x
16	32	68010	10	LSI-11	5, ± 12	2		19.2	4MB	4MB		x
16	16-32	Custom	4	Maxi-bus	5, ± 12		32		128	2/6	0/6	x
16	16	F9445	16/20	Multibus		2	32		64	8	0/32	
16	**16**	**F9450**	**20**	**Multibus**	**5, ± 12**	**2**		**19.2**	**2MB**	**64**	**16/32**	
16	16	MIL-STD-1750A	10MHE/40	Multibus	5, ± 12	2	1	9600	128	2000	128	x
16	16	MKS16	10	Multibus	5	1	0	19.2	128	2Mb	2Mb	x
16	16	MKS16	10	Multibus	5	1		19.2	128	2Mb	32	x
16	16	M68010C	10/12.5	Multibus	5, ± 12	4	8/16	38.4	16MB	1M/16M	128/128	x
16	16	M68010C	10/12.5	Multibus	5, ± 12	2	8/16,20	38.4	16MB	1M/16M	128/128	x
16	24	NS16032	10	Multibus		1	24		16000	32/128	1/8	
16	16	Z8001	4/10	Multibus	5, ± 12	2	40	1000	8MB	512/560	0/128	
16	16-64	Z8001	10	Multibus	5				8Mb		0/32	
16	16	Z8002	4/10	Multibus	5, ± 12	2	40	1000	1MB	512/560	0/128	
16	16-64	68000	8/10	Multibus	5, ± 12	4	8	19.2	16MB	0.256/16	0/64	x

Sequenced alphanumerically by data word size, CPU type, and increasing clock frequency.

Software Support									
Assembler	Debug/ Monitor	Editor	High Level Language	Operating System	Hardware Support	Comments	Model	Source	Line
	x	x	x	x	x	Self-contained computer system on STD bus card. Terminal port, printer port and EPROM programmer.	iPC-STD88-3	Vesta	
	x	x	x	x	x	Self-contained computer system on STD bus card. Terminal port, printer port and EPROM programmer.	ipc-STD88-1	Vesta	
	x	x	x	x	x	Self-contained computer system on STD bus card. Terminal port, printer port and EPROM programmer.	ipc-STD88-2	Vesta	
	x	x	x		x	STD Bus controller with Robasic—Fast interactive BASIC. Two serial ports.	880 CPU	Octagon	
x	x	x	x	x	x	High-performance Dual CPU Board	DPC-816	ACE	5
x	x	x	x	x	x	Optional 80287 Numeric Data Processor, optional expansion board to12 JEDEC 28-pin sites	iSBC286/10	Intel	
x	x	x	x	x	x	Three HDLC/SDLC communications channels, programmable baud rate, optional numeric data processor	iSBC88/45	Intel	
x	x	x	x		x	Microcontroller, EPROM programmer, digital I/O, Tiny Basic.	SYS-1	Octagon	
x	x	x	x		x	Same as SYS-1A with 4-channel, 12-bit A/D converter, 500 mA, 50 V outputs.	SYS-2A	Octagon	
x	x	x	x		x	Same as SYS-1 with 8 channel, 8 bit A/D, D/A output, high current drivers, EPROM and EEPROMs.	SYS-3A	Octagon	10
x	x	x	x		x	STD Bus controller with cambasic, EPROM programmer, bit, BCD, byte, 16-bit commands. Development software, Tiny Basic.	SYS-10A	Octagon	
						Extremely Fast, BASIC language, multiprocessing RS-232C port with full handshake	QBC-881	Octagon	
x	x	x	x	x		SBX connector, status LED's, readable configuration switches, 2 DMA channels.	Multimaster186	EnergySci	
x	x	x	x	x	x	Memory management unit, byte parity generation and checking for RAM, dual port RAM, programmable VMEbus base address for RAM.	MK75602	Mostek	
x	x	x	x	x	x	R5232C I/O, 8 bit switch input register, two timer/counters, self-test LED.	VME-SBC	Mostek	15
x	x	x	x	x	x	Includes teletypewriter operating system and programmable baud rates.	F3870-PEP	Fairchild	
x	x		x	x		Similar to LP-12 but omits on-board memory. Addresses 32K words of external memory.	LP-12P	ICC	
x	x		x	x		CMOS. Two-latched 12-bit ports and two 4-bit ports.	LP-12	ICC	
x	x	x	x	x	x	Keyboard, 2 4-digit LEDs on card.	InterceptJr	Intersil	
x	x	x	x	x	x	Development board. EPROM programmer, Wire-Wrap area.	SBS-100	SingleBoard	20
x	x						FX-97	AllenSys	
x	x	x	x	x	x	3 16-bit timers, user Wire Wrap area, 6 prioritized interrupt levels.	MEX68KDM	Motorola	
x	x	x	x		x		1868+A	Xycom	
							LSI-11/23	DEC	
x	x	x	x	x	x	Also available as complete system.	IS-68K	IntSolutions	25
x	x	x	x	x	x	Also available as complete system.	IS-6810	IntSolutions	
x	x	x	x	x	x	Floating point option, real-time clock, 8 channels of I/O from on-board I/O distributor. Intelligent cable interfaces, Pascal.	NM4/10	CompAuto	
x	x		x	x		Prototyping evaluation and programming board, on-board EPROM programmer	PEP-45	Fairchild	
x	**x**		**x**	**x**			**SBC-50**	**Fairchild (2101)**	
x	x	x	x	x	x	Single board CMOS implementation of MIL-STD-1750A plus options.	MKS1750/S0	Mikros	
x	x			x	x	Two-card implementation of USAF MIL-STD-1750A ISA.	MKS1750/M0	Mikros	30
x	x			x	x	Two-card implementation of the USAF MIL-STD-1750A ISA.	MKS1750/MO	Mikros	
x	x	x	x	x	x	SCSI ANSI X3T9.2 Compatible interface, Single cycle DMA and 68450 to QIC-02/Centronics, iSBX ad SCSI interfaces, MMU 68451 Multimaster, 2 16 bit iSBX, 1 iLBX, FPP 68881, 1 MB on card, Unix Sys V. High level software tools supported by Unix to real-time links.	HK68/M10	Heurikon	
x	x	x	x	x	x	Single Cycle DMA 68450 on QIC-02/Centronics, and iSBX interface, 1Mb on Card, Multimaster 2 16-bit iSBX, high level software tools.	HK68/ME	Heurikon	
x	x	x	x	x	x		DB16000	National	
x	x	x	x	x	x	One SBX connector, paged MMU, CP/M-8000.	MBX8001	SingleBoard	35
	x					Optional Z8003 virtual memory CPU, 32K bootstrap/monitor PROM sockets, 64K I/O address space.	B1045	CentData	
x	x	x	x	x	x	One SBX connector, paged MMU, CP/M-8000.	MBX8002	SingleBoard	
x	x	x	x	x	x	On card 4 channel DMA hard disk and streaming tape interface, BYTE-swap buffer, twin expansion connectors, and memory management unit	HK-68A	Heurikon	

Bold face indicates additional data is provided on the page noted.

MICROCOMPUTER BOARDS (Cont'd)

General						I/O			Memory			
										Supplied/Extra Capacity		
Data Word Size (bits)	Instruction Word Size (bits)	CPU Type	Clock Frequency Min/Max (MHz)	Bus Type	Supply Voltage (V)	No. of Serial Ports	No. of Parallel Lines	Max. Baud Rate (kb/s)	Directly Addressable Words (Kbytes)	RAM (Kbytes)	(P)ROM (Kbytes)	DMA Capability
16	16-80	68000	10	Multibus		2	32		16Mb	32/128	0/92	
16	8-32	80C86	5/8	Multibus	5, ± 12	1	24	19.6	1MB	16/64	256	
16	8-32	80C86	5/8	Multibus	5, ± 12	1	24	19.2	1MB	32/512	0/256	x
16	16-24	80186	8	Multibus	5	1	24		1Mb	128/512	0/128	x
16	16-24	80186	8	Multibus	5	1	24	9.6	1Mb	128/512	0/128	x
16	16-64	80286	6/8	Multibus	5, ± 12	1	24		16Mb	0/4	0/32	
16	8-48	8080A	5	Multibus		1			1000		0/32	
16	8-40	8086	5	Multibus		2			1000		0/32	
16	16-64	8086	5/8	Multibus	5, ± 12	1			1Mb	0/4	0/128	
16	8-32	8086	5/10	Multibus	5, ± 12	3	24	880	1MB	0/8	0/24	x
16	8-32	8086	5/10	Multibus	5, ± 12	3	24	880	1Mb	0/48	0/192	x
16	16	8086	5/10	Multibus	5, ± 12	3	24	880	1Mb	0/8	0/24	x
16	8-48	8086	5/10	Multibus	5, ± 12	1	24	38.4	1MB	512	128/512	x
16	8-80	8086	5/10	Multibus	5, ± 12	1	8	19.2	1MB	0/128	0/128	
16	8-48	8086	5/8	Multibus	5, ± 12	1	24	9.6	1000	8/16	0/32	x
16	16-40	8086	5/10	Multibus	5, ± 12	3	24	1000	1000	2/12	0/16	
16	8-32	8086	5/10	Multibus	5, ± 12	1	24	38.4	1MB	32/128	0/32	x
16	20	8086	5/10	Multibus	5, ± 12	2	24	38.4	1000	8/16	0/64	x
16	20	8086-2	5/8	Multibus	5, ± 12	1	24	38.4	1000	32/64	0/128	x
16	20	8086-2	5/8	Multibus	5, ± 12	1	24	38.4	1000	128/256	0/128	x
16	16	9440	12	NOVA		2	8		32	32	4	
16	15	TMS9900	3	Proprietary	5, ± 12	1	16	19.2	64K	0	0	
16	16	TMS9900	3	Proprietary	5, ± 12	1	16	19.2	64K	2/4	2/8	x
16	16	TMS9900	3	Proprietary	5, ± 12	1	16	19.2	64K	2/4	2/8	x
16	16	Z8001	4	Proprietary	5	2	32		16	16/16	4/4	
16	16	Z8002	4	Proprietary	5	2	32		16	16/16	4/4	
16	20	8086	2.5/5	Proprietary	5	1	48	4.8	1000	2/4	8	x
16	16	9440	8/12	Proprietary		1	0		32	4	2	
16	16	J11	15	Q-Bus	5				4000	8		
16	16	T11	4.91	Q-Bus	5, ± 12	2	24	38.4	64			
16	16	T11	7	Q-Bus	5, ± 12	3	30	76.8	64			x
16	16-32	Custom	4	Scout-bus	5		16/32		128	0	0	x
16	16	80186	8	SCSI	5	2	8	38.4	512	128-512	16-128	x
16	16	80186	8	SCSI	5, ± 12	2	33	115.2	1Mb	512	16/64	x
16	16	80186	6/8	Slicer	5, ± 12	2	SASI	38.4	100	256/512	8/64	x
16	16	68010/68000	8	STD					16M	512		
16	16	80186	8	STD	5, 12	1	16	19.2	1000	128/512	16/64	x
16	16-24	80186-6	5	STD	5	2	24	56	1600	1000 (opt.)	384 (opt.)	x
16	16-24	80186-8	8	STD	5	2	24	56	1600	1000 (opt.)	384 (opt.)	x
16	16	8088	8	STD	5, ± 12	2		19.2	1MB	16		x

Sequenced alphanumerically by data word size, CPU type, and increasing clock frequency.

MASTER SELECTION GUIDE

Software Support									
Assembler	Debug/ Monitor	Editor	High Level Language	Operating System	Hardware Support	Comments	Model	Source	Line
x	x	x	x	x	x	ROM, RAM, on-board I/O and off-board addresses user defineable. Contains 3 16-bit timers and 7 levels of vectored interrupts.	OB68K1A	Omnibyte	
					x	CMOS, low-power alternative to the 86/05, battery backed-up RAM	CBC86C/05	DiversTech	
					x	CMOS 86/14, battery back-up RAM.	CBC86C/14	DiversTech	
x		x	x	x	x		8186	Intel	
x		x	x	x	x	Memory-intensive-processor board	MSC8186	MonSys	5
x	x	x	x	x	x	Virtual memory support (1Gb), built-in memory management and protection.	DBC286M	Microbar	
x	x	x	x	x	x	For severe environment: operating temperature 55° to 85°C vibration 5g 5 Hz to 1kHz, meets MIL-E5400, 16400, and 4158.	SECS86/05	EMM-SESCO	
				x		Two programmable timers, nine level vectored priority interrupts.	SECS80/86	EMM-SESCO	
x	x	x	x	x	x	Optional 8087 floating-point processor. Optional memory management module.	DBC86	Microbar	
x	x	x	x	x	x	Three timers, interrupt controller, real-time clock. The DCS 86/16 is usable as a stand-alone computer, typically for real-time control, or in a system.	DCS-86/16	DistComp	10
x	x	x	x	x	x	Same as above plus a watchdog timer, 2 iSBX connectors, 10 year battery backup RAM, on board socket for 8087.	DCS-ICB/86	DistComp	
x	x	x	x	x	x	Three timers, interrupt controller, real-time clock. Stand-alone computer, typically used for real-time control or in a system.	DCS/86/16	DistComp	
x	x	x	x	x	x	Two programmable timers, nine-level vectored interrupts, optional 8087 co-processor.	MBC-8b/512B	Matrox	
	x	x		x	x	Numeric coprocessor, 16-bit timer, interrupt control, real-time clock. Augat Holtite zero-profile sockets. Also available in CMOS version.	86/50A	VisionsUnlim	
x	x	x	x	x	x	Two programmable timers, nine-level vectored priority interrupts, ROM/PROM expandable to 64K with iSBC Multi-Module.	iSBC86/05	Intel	15
x	x	x	x	x		Three serial I/O channels. Two allow use of high-level bit protocols.	DCS86/16	DistComp	
x	x	x	x	x	x	Two programmable timers, programmable interrupt controller, ROM/PROM expandable to 32K bytes on board.	MBC-86/12A	Matrox	
x	x	x	x		x		ZX86	Zendex	
x	x	x	x	x	x		iSBC86/14	Intel	
x	x	x	x	x	x		iSBC86/30	Intel	20
x	x	x	x	x	x	Compatible with industry standard 15' x 15' I/O controllers. Up to 8K bytes of program autoload PROMS. Memory control and parity logic.	GLOW-16	Fairchild	
x	x	x	x	x	x		CPU201	TauZero	
x	x	x	x	x	x	Two interval timers.	TM9900/100MA	TI	
x	x	x	x	x	x	Three interval timers.	TM9900/101MA	TI	
x	x	x	x	x	x	Development module for evaluation and debugging of Z8000-based systems.	Z8001DM	Zilog	25
x	x	x	x	x	x	See above.	Z8002DM	Zilog	
x	x	x	x	x	x		SDK-86	Intel	
x	x		x	x		Nova instruction set, PROM resident entry and debugging program. Up to 4 I/O controller boards memory expansion to 64K bytes.	SPARK-16	Fairchild	
x	x	x	x	x	x	CPU board based on J11 CMOS microprocessor.	LSI-11/73	DEC	
x	x		x	x	x	Supported by RT-11, Micropower Pascal.	KXT11-AB	DEC	30
x	x		x	x	x	Two serial lines are programmable synchronous/asynchronous. Up to 14 units can operate as peripheral processors on a single Q-Bus.	KXT11-C	DEC	
x	x	x	x	x	x	Isolite auto self test, floating point option, real-time clock. Hardware multiplication and division.	NM4/04	CompAuto	
x	x	x	x	x	x	Mounts on 5- 1/4' floppy, SCSI bus interface, no wait states, boots PC-DOS, 7 watts	Little Board/186	Ampro	
x	x	x	x	x	x	Same size as 5 1/4 inch floppy drive. Mounts directly on it.	LittleBoard/186	Ampro	
x	x	x	x	x	x	Floppy-disk controller, SASI port for hard disks.	SLAT256	Slicer	35
	x					STDbus CPU and memory card set.	DSTD-160/360	DY-4	
	x				x	Includes link to PC for software development.	8500	Cubit	
x	x	x	x	x	x	High-performance 16-bit processor with special format card cage.	ZT8816	Ziatech	
x	x	x	x	x	x	High-performance 16-bit processor with special format card cage.	ZT8817	Ziatech	
x	x		x	x		Optional 8087 numeric data processor or floating point co-processor, 8089 I/O processor.	10888	Enterprise	40

MICROCOMPUTER BOARDS (Cont'd)

General						I/O			Memory			
Data Word Size (bits)	Instruction Word Size (bits)	CPU Type	Clock Frequency Min/Max (MHz)	Bus Type	Supply Voltage (V)	No. of Serial Ports	No. of Parallel Lines	Max. Baud Rate (kb/s)	Directly Addressable Words (Kbytes)	Supplied/Extra Capacity RAM (Kbytes)	Supplied/Extra Capacity (P)ROM (Kbytes)	DMA Capability
16	16	80186	8	S100	8	64	32	19.2	64	1Mb	64	x
16	16-64	80186	8	S100	8, ± 16	2	16	9.6	1Mb	256	8/64	x
16	16-64	80286	6/8	S100	8				16Mb		8/64	
16	16-64	8086	4/10	S100	8				1Mb		8/16	x
16	16	68000	4/8	S-100	8				16M	0	0	
16	8-80	8086/87	5/8	S-100	8, ± 16	2	16	19.2	1MB	128/512	4/64	x
16	16	TMS9900	3	TM990	5, ± 12	1	16	19.2	64K	0/128	4/16	x
16	15	74S481	5	TM990	5, ± 12	1	0	19.2	64	0	0	x
16	32	68000	2	VERSAbus		2	60		16000	16	8/64	
16	16	68000	8	VERSAbus	5, ± 12	2		19.2	16MB	32/128	0/64	x
16	16	68000	8	VERSAbus	5, ± 12	2	40	9.6	16MB	32/64	0/64	x
16	32	68000	8	VME	5, ± 12	1	8	—	16MB			
16	32	68000	8	VME	5, ± 12	1	—	19.2	16MB	16	16	x
16	32	68010	8/10	VME	+5, ± 12	1	24	38.4	16Mb	1024	16/32	
16	32	68010	8/10	VME	5, ± 12	1	0	38.4	16Mc	1024	16	x
16	32	68010	10/12.5	VME	5, ± 12	1	16	38.4	16Mc	128	16/512	x
16	16	M68010C	10/12.5	VMEbus	5, ± 12	2		38.4	16MB	1M/16M	128/128	x
16	16	M68010C	10/12.5	VMEbus	5, ± 12	2	8	38.4	16MB	1M/16M	128/128	x
16	16	68000	8	VMEbus		6		19.2	16M			
16	16	68000	8	VMEbus	5, ± 12	1		9.6	16MB	0/64K	0/128	x
16	8-32	68000	8	VMEbus	5, ± 12	2	16	38.4	16MB	8/0	0/48K	x
16	32	68000	8/10/12.5	VMEbus	5	2	60	19.2		2000	256	x
16	16	68000	8-12	VMEbus	± 12	2		19.2	16M	1M		
16	16	68000	8-12	VMEbus	± 12	2		19.2	16M	112	448	
16	32	68010	8	VMEbus	5, ± 12	2			16MB			
16	16/80	68010	8/10/12.5	VMEbus	5	8		19.2	16MB	64/256	64	x
16	16	68010	8, 10	VMEbus		1			16M	512		
16	16-80	68010	10/12.5	VMEbus	5, ± 12	2	16	19.2	16MB	128/512	64	
16	16	68010	12.5	VMEbus	5, ± 12	2	16	38.4	16MB	1MB		
16/32	16-48	Z8001/2	4-10	Multibus	5, ± 12	2	40	1000	8MB	32/128/512	128	
16/32	16-80	68000	4/8	Multibus	5, ± 12	2	24		16MB	0/4	0/32	
16/32	16-80	68000	8	Multibus	5	2	16		1MB	256	32	x
16/32	16	68000	10	Multibus	5	2	16	880	8MB	128/256	32	
16/32	16-80	68000	10/12	Multibus	5, ± 12	2	iSBX		16Mb	128/256	0/128	
16/32	16	68000	10/12	Multibus	5	2	16	880	24MB	256/1MB	128	
16/32	16-80	68000	10/12	Multibus	5	4	4	880	16 MB	1 MB/16 MB	32/256	
16/32	16-80	68000	10/12	Multibus	5	4	4	880	16 MB	1 MB/16 MB	32/256	
16/32	32	68010	10	Q-bus	5, 12				4Mb		0.5	x

Sequenced alphanumerically by data word size, CPU type, and increasing clock frequency.

MASTER SELECTION GUIDE

Software Support									
Assembler	Debug/ Monitor	Editor	High Level Language	Operating System	Hardware Support	Comments	Model	Source	Line
				x	x	Five- and 8-inch floppy disk controller, Math coprocessor, real-time clock, 256K or 1MB of RAM, up to 64K of ROM.	Super 186	AdvDigital	
x	x	x	x	x	x	Concurrent CP/M-86.	Thunder 186	Lomas	
x	x	x	x	x	x	CP/M-86, MS-DOS and concurrent CP/M-86.	Lightning 286	Lomas	
x	x	x	x	x	x	CD/M-86, MS-DOS and concurrent CP/M-86, also 8087 and 8089 CPU.	Lightning One	Lomas	
x	x	x	x	x	x	Dual processor unit, 8 MHz 68000 and 4 MHz Z-80A, 32-bit wide architecture, software-controlled switching.	DPU	Cromemco	5
x	x	x		x	x	Optional CPU, memory size, I/O configuration	SBC-86/87	Teletek	
x	x	x	x	x	x	Memory mapped address space to 1M bytes.	TM9900/102	TI	
x	x	x	x	x	x	High performance CPU module software compatible with 100MA or 101M. Supports floating point and extended integer arithmetic instructions.	TM990/1481	TI	
	x		x				VMC68K/15	National	
x	x	x	x	x		Shared RAM permits DMA operation with VERSAbus intelligent peripheral controller modules. Has local 8-bit I/O bus and three 16-bit timers.	**M68KVM02**	**Motorola (2114)**	10
x	x	x	x	x		Programmable timer/counter VERSA bus interface, system controller functions include bus arbitration, system interrupt processing, test signal, and self-test.	**VERSAmodule**	**Motorola (2114)**	
					x	Controller, 1024 x 1024 Graphics display controller. 4 to 11 bits per pixel.	GDC-1	Force	
x	x				x	Controller, intelligent SASI host adapter 68450 DMA controller.	SASI-1	Force	
x	x	x	x	x	x	Dual Ported DRAM.	CPU-2	Force	
x	x	x	x	x	x	68450 DMA, 68451 MMU for multi user applications	CPU-3	Force	15
x	x	x	x	x	x	Zero watt-state access to SRAM 6850 DMAC, 4 level arbiter.	CPU-4	Force	
x	x	x	x	x	x	68451 MMU, 1 MB RAM on Card, 68881 FPP, RS-422 Opt. 68450 DMAC, iLBX, SCSI QIC.02, Multimaster, high level software tools supported by UNIX to real-time links.	HK68/V10	Heurikon	
x	x	x	x	x	x	DMAC 68450, 2 iSBX connectors, OPT 68881, FPP, 1 MB on-board, Multimaster. High level software tools supported by UNIX to real-time links.	HK68/VE	Heurikon	
						Intelligent communications center.	DVME-702	DY-4	
				x	x	Supports I/O channel for large variety of peripheral and I/O functions.	**MVME110**	**Motorola (2109)**	20
x	x		x	x		CPU module, optional memory management unit, programmable real-time clock, 7 levels of interrupt.	SMVME2000	Signetics	
							GMSV06	GenMicro	
	x					Processor card with MMU and I/O.	DVME-102	DY-4	
	x					Single board microcomputer.	DVME-105	DY-4	
x	x	x	x	x	x	Six 28-pin sockets accept up to 64 Kb of on-board ROM/PROM and up to 48 Kbyte of RAM, programmable 16-bit parallel port, 24-bit timer.	MVME115M	Motorola	25
	x				x	On-board dual point static and dynamic RAMS, Four channel DMA controller.	IV-1624	Ironics	
	x					Processor card with I/O bus.	SVME-101	DY-4	
x	x	x	x	x	x	No wait state dynamic RAM, system controller, with single level arbiter, 2-Bytewide sockets, optional floating point processor.	IV-1602	Ironics	
x	x	x	x	x	x	Proprietary zero wait state MMU, 1MB dual-ported DRAM	AC-V14	Astraea	
x	x	x	x	x	x	SBX connector, static RAM capability, EEPROM, CP/M-8000 available, SASI interface, six 16-bit counter-timers	MBX8000	SingleBoard	30
x	x	x	x	x	x	Optional two-level page-oriented memory mapping and protection. Dual bus architecture.	DBC68K	Microbar	
						Five 16-bit timer channels, one 16-bit parallel input port.	CPU0100	Codata	
	x	x	x	x	x	SUN compatible, no-wait state MMU, master only.	PM68K	Pacific	
x	x	x	x	x	x	Optional two-level page-oriented memory mapping and protection. Dual bus architecture.	DBC68K2	Microbar	
x	x	x	x	x		Has 68000 or 68010 CPU. No wait state 8MB context MMU with dual ported RAM, 7 Mailbox interrupts.	PM68D	Pacific	35
x	x	x	x	x	x	1.5 MB/s SCSI controller, real-time clock, 2-level demand-paged MMU, optional 68020 and 68881 daughter board, 16 MB dual-port no-wait-state RAM.	SM68F	Synergy	
x	x	x	x	x	x	1.5 MB/s SCSI controller, real-time clock, 2-level demand-paged MMU, optional 68020 and 68881 daughter board, up to 16 MB no-wait-state RAM, :SBX connector, optional parallel port.	SM68M	Synergy	
x	x	x	x	x	x	Runs AT&T UNIX System 5.2. (Add-on memory also available)	UNIVAX68010	Cambridge	

Bold face indicates additional data is provided on the page noted.

MICROCOMPUTER BOARDS (Cont'd)

General						I/O			Memory			
Data Word Size (bits)	Instruction Word Size (bits)	CPU Type	Clock Frequency Min/Max (MHz)	Bus Type	Supply Voltage (V)	No. of Serial Ports	No. of Parallel Lines	Max. Baud Rate (kb/s)	Directly Addressable Words (Kbytes)	Supplied/Extra Capacity RAM (Kbytes)	Supplied/Extra Capacity (P)ROM (Kbytes)	DMA Capability
16/32	16	68008	5.0688	STD	5	1		19.2	1Mb	2	8	
16/32	16	68000	12.5	VERSAbus	5	4		38.4	16Mb	0/16Mb	16	x
16/32	16	68000/68010	8/10	VME	5, ± 12	1	8/16	38.4	16 M	128/512	32	
16/32	16	J11	15	VMEbus	5, ± 12	4	20	38.4	4000	64	256	
16/32	16-80	68000	8/10	VMEbus	5, ± 12	2	16	19.2	16MB	48	48	
16/32	16-80	68000	8/10	VMEbus	5, ± 12	2	16	19.2	16MB	0/48	0/48	
16/32		68000	8/10	VMEbus	5, ± 12	3	24	19.2	16MB	512	16/128	
16/32	16	68000	8/10	VMEbus	5, ± 12	3	8/16	38.4	16MB	128	64	
16/32	16	68000	8/10	VMEbus	5, ± 12	1	8/16	38.4	16MB	256/1MB	16	
16/32	16	68000	8/10	VMEbus	5	1		38.4	16MB	16	64	x
16/32	16-80	68000	8/12.5	VMEbus	5, ± 12	2-4	16		16MB	256/1MB	0/320	
16/32	16	68000	12.5	VMEbus	5	4		38.4	16Mb	0/16Mb	16	x
16/32	16	68000 or 68010	10/12	VMEbus	5, − 12	2	4	880	32Mb	256 or 1/8 Mb	128	
16/32	16	68000 or 68010	10/12	VMEbus	5, − 12	2	4	880	32Mb	256 or 1/8 Mb	128	
16/32	16	68010	8/10	VMEbus	5, ± 12	1	8/16	38.4	16Mb	256/1Mb	16	
16/32	32	68010/20	12/16	VMEbus	5, ± 12	2		19.2	8/256MB			x
16/32	16-80	68000	10	Multibus		2	32	19.2	16M	128/0	0/192	
16/32	16-80	68000	10	Multibus		2	32	19.2	16M	32/0M	0/192	
16/32	16-80	68000	10	Multibus		2	24		16M	128/128	0/64	
16/32	16-80	68010	10	Multibus		2			16M	4	0/32	x
16-8	16-8	8088	8	QBus	5	1		250	192/768	192/768		
16-8	16-80	8088	8	Unibus	5	3		250	256/768	256/1Mb		
16-32	16-80	68000	10/12.5	VMEbus	5, ± 12	2			16Mb	128/512		
32	32	32032	10	Multibus	5, ± 12	2		38.4	128	8	512	x
32	16	68000/68010	10/12	Multibus	5	4		1000	16Mb	256/512 1 or 2 Mb	256	
32	16-80	68020	12/16	Multibus	5,-12	4	4	880	4GB	1 MB/64 MB	32/256	
32	32	68020	16.7	Multibus	5, ± 12	2		880	256	8	768	x
32	32	NS32016	10	S-100	8				16Mb			
32	16-32	68020	12.5	VERSAbus	5, ± 12			800	4Gb			
32	32	WE32100	10/14	VME	5					64/32		
32	32	WE32100	10/14	VME	5	2	32	19.2	4Gb	1Mb	128	x
32		68020	12.5/16	VME/VMX	5			19.2		512/1MB	64	
32	16	68000	10	VMEbus	5	2	2	38.4	16Mb	4/112	8/512	
32	16-80	68020	12/16	VMEBUS	5,-12	4	4	880	4GB	1 MB/64 MB	32/256	

Sequenced alphanumerically by data word size, CPU type, and increasing clock frequency.

Software Support									
Assembler	Debug/ Monitor	Editor	High Level Language	Operating System	Hardware Support	Comments	Model	Source	Line
x	x					The 68008 is a 68000 with 8-bit wide path to the outside world. DMA can be provided off board. Up to 8K RAM on board. Serial lines are RS-232C buffered.	FX-688	AllenSys	
x	x	x	x	x	x	Supported by UNOS and VN/System V operating systems. Includes second 68000 for IOP.	CP-32	CharlesRiver	
x	x			x	x		PME-68-2D	PlesseyMicro	
					x	Instruction set compatible with DEC PDP-11, optional on-board lithium battery.	VME-1120D	LogicalDes	
x	x	x	x	x	x	Accepts 48Kb RAM or ROM. Two serial RS232 ports.	AC-V11	Astraea	5
x	x	x	x	x	x	Memory management. Accepts 48KB RAM/ROM/PROM.	AC-V12	Astraea	
x	x	x	x	x	x	All Force CPU's function as slot 1 system control.	CPU-1	Force	
x	x	x	x	x	x	RAM is dual-port, real-time clock with battery.	PME68-1B	PlesseyMicro	
x	x			x	x	On-Board Disk Controller, Real-Time Clock with Battery, Multiprocessing Support.	PME68-2/100	PlesseyMicro	
x	x	x	x	x	x	On-Board DMA Controller and MMU. Real-Time Clock, 4-Level Arbiter.	PME68/3	PlesseyMicro	10
x	x	x	x	x	x	No wait-state dynamic RAM, up to 4 serial I/O parts, SASI/SCSI bus mass-storage interface, buffered parallel printer port, 3-channel programmable counter/timer.	IV-1600	Ironics	
x	x	x	x	x	x	Includes 4Kb cache, supported by UNOS and UN/System V.	VCP-2000	CharlesRiver	
x	x	x	x	x		Includes CSCI controller and fast arbitration option for systems with less than 5 masters. No-wait state 16 context MMU with dual-port RAM.	PV68F	Pacific	
x	x	x	x	x			V68S	Pacific	
x	x	x	x	x	x	Disk Controller, Real-Time Clock with Battery, Virtual Memory and Multiprocessing Support.	PME68-2/102	PlesseyMicro	15
x	x	x	x	x	x	Also available as complete system.	VME-6810	IntSolutions	
x	x	x	x	x	x		OB68K1A-128	Omnibyte	
x	x	x	x	x	x	Software definable 16-bit parallel ports, 3 16-bit timer/counters, 8 sockets for up to 64K bytes of EPROM.	OB68K1A-32	Omnibyte	
							M68K10	SBE	
x	x	x	x	x	x	Multi-user CPU board. Memory management capability, calendar/clock.	OB68K/MMU	Omnibyte	20
x	x	x	x	x	x	Allows DEC-LSI-11 and PDP-11 computers to execute PC-SOC or CP/M-86 programs from any terminal on the DEC system. Has an RS-232C compatible serial channel. Comes with a control program resident to the native DEC operating system.	QCP-11+	Logicraft	
x	x	x	x	x	x	One, two or three 8088 microprocessors, each having from 256K to 768K RAM and an RS-232C compatible serial channel. Enables DEC PDP-11 and VAX computers access to PC-DOS and/or CP/M-86 Micro programs and DEC applications can run simultaneously.	HCP-11	Logicraft	
x	x	x	x	x	x	No wait-state dynamic RAM, dual-port static RAM. 2-Bytewide sockets, interrupt handler, optional floating-point processor.	IV-1601	Ironics	
	x					Dual 32032 processors, optional memory management unit and floating point processor, supports 32-bit memory bus.	NAP-2000	Matrox	
x	x	x	x	x	x	One IEEE P959 (iSBX) connector for options such as parallel I/O, serial I/O, floating point and GPIB.	OB68K/MSBC1	Omnibyte	25
x	x	x	x	x	x	1.5 MB/s SCSI controller, real-time clock, 2-level demand-paged MMU, up to 64 MB dual-port no-wait-state RAM.	M020	Synergy	
	x					Includes on-board memory management unit and floating point processor, supports dedicated 32-bit memory bus.	MAP-2000	Matrox	
x	x			x		Dual processor with NS32016 and Z80. Runs with CP/M.	16KZ	InrVision	
x	x	x	x	x	x	Optional demand paged virtual memory management module, on board software transparent cache configured as 4K entries, RAMbus interface, and two 28-pin ROM sockets.	**M68KVM04**	**Motorola (2115)**	
x	x	x	x	x	x	Evaluation board for WE32100 CUP and WE32101 MMu. Interactive monitor program, individually maskable interrupts, 3 16-bit timers	**WE321EB**	**AT&T (1603)**	30
	x	x	x	x	x		**WE321SB-V100**	**AT&T (1603)**	
x	x	x	x	x	x	No wait state RAM access, floating point co-processor, 16-bit programmable timer.	IV-3201	Ironics	
x	x	x	x	x	x	Fully functional system controller, 16 universal JEDEC 28-pin sockets for RAM/ROM.	OB68K/VME1	Omnibyte	
x	x	x	x	x	x	SCSI controller, real-time clock, 2-level demand-paged MMU, up to 64 MB dual-port no-wait-state RAM, on board arbiter.	V020	Synergy	

Bold face indicates additional data is provided on the page noted.

MICROCOMPUTER–SUPPORT BOARDS

Supported System Function	Part Number	Source
Apple		
High-speed PF474 string comparator.	PF-AP	Proximity
I/O, High-level analog-input board	DT2832	DataTrans
I/O, Low-level analog-input board	DT2834	DataTrans
Bit Bus		
Remote multifunction interface	DT901/901-I	DataTrans
C-44		
Controller, Floppy Disk.	DDC-35	Onset
Converter, A/D, 12-bit.	MOR-800	Onset
Converter, A/D, 32-channel.	ADC-32	Onset
Data logging, 64 Kbytes.	DS-64	Onset
I/O, Parallel port, 40-line.	PAR-40	Onset
LCD Interface with Votrax speech chip.	KDT-16	Onset
Math, Combination UART and miltiply/divide board, 50 to 19,200 baud, RS-232 interface.	ACR-10	Onset
Memory, 16 Kbyte RAM.	MEM-88	Onset
Memory, 64 Kbyte RAM.	MEM-64	Onset
Memory, 512K Dynamic RAM board.	RAM-512	Onset
C-bus		
I/O, Processor for input/output channels using Z-80A MPU.	IOP	Cromemco
I/O, QUADART, 4-channel synchronous/asynchronous interface, modem handshaking channel-to-channel diagnostic loop-back capability, four interval timers, vectored interrupts.	QDRT	Cromemco
CIMbus		
Controller, clock/calendar, real-time clock, 4-year calendar, provision for up to 32Kx8 battery-backed RAM.	CIM-510	National
I/O, Analog input, 32 single-ended, 16 differential, or 8 differential and 16 single-ended channels.	CIM-411	National
I/O, Analog output, 12-bit resolution on either of two output channels.	CIM-421	National
I/O, Distributed I/O bus interface.	CIM-230	National
I/O, Dual channel serial, independent asynchronous I/O channels.	CIM-203	National
I/O, Frequency/period measurement, interface to tachometers and voltage-to-frequency converters.	CIM-220	National
I/O, Parallel, 40-bit programmable I/O lines with provisions for interchangeable line drivers and terminators.	CIM-210	National
I/O, Power, interfaces to a CIMBUS system via the distributed I/O bus.	CIM-311	National
I/O, Serial, single-channel asynchronous transfer.	CIM-201	National
Math, Processor, 2 MHz, implements transcendental math functions with AM9511 chip.	CIM-550	National
Math, Processor, 4 MHz, implements transcendental math functions with AM9511 chip.	CIM-551	National
Memory, PROM/RAM expansion, no RAM installed.	CIM-100	National
Memory, PROM/RAM expansion, 8 Kbyte RAM installed.	CIM-104	National
Memory, PROM/RAM expansion, 16 Kbyte RAM installed.	CIM-108	National
Miscellaneous, Voltage regulator, supplies 5, 15, and -15 Vdc to Cimbus interface.	CIM-610 CIM-612	National National
Prototyping board, 32 16-pin DIP capacity.	CIM-630	National
Prototyping board, 63 16-pin DIP capacity.	CIM-631	National

Supported System Function	Part Number	Source
Ethernet		
Ethernet node processor/LAN controller, provides 10 Mbp/s Ethernet interface, on-board EPROM.	**M68KVM33**	**Motorola (2116)**
EXORbus		
Clock/calendar/timer.	GMS6523	GenMicro
Controller, Color RF/video.	GMS6512	GenMicro
Controller, CRT/Keyboard Controller.	GMS6523	GenMicro
Controller, IEEE-488 GPIB.	GMS6514	GenMicro
Controller, Intelligent floppy disk, for 8-inch diskette drives.	9671	CreMicro
Controller, Intelligent Winchester floppy controller.	GMS6529	GenMicro
Controller, Mini-floppy controller.	GMS6519B	GenMicro
Controller, QUAD ACIA and TTV.	GMS6511	GenMicro
Controller, SCSI Controller.	GMS6509	GenMicro
Converter, A/D, 12, 14 and 16-bit, 6 inputs.	GMS6503	GenMicro
Converters, D/A, 10- or 12-bit.	GMS6502	GenMicro
Converters, Data acquisition module, 12-bit sample/hold, programmable differential gain amplifier.	GMS6520	GenMicro
Data encryption processor.	9659	CreMicro
Design prototyping	GMS6513	GenMicro
Extender module	GMS6516	GenMicro
I/O, Analog output, 10-bit resolution for any selected bipolar span on sixteen channels between -5 Vdc to Q5 Vdc.	9663	CreMicro
I/O, Asynchronous eight channel duplex serial.	9650A	CreMicro
I/O, Combination serial-parallel.	9622	CreMicro
I/O, Digital, 80 bidirectional I/O lines, 8 timers.	GMS6501	GenMicro
I/O, Form C contact closure module	9673	CreMicro
I/O, Four port asynchronous serial communications interface module.	MBK6850	MRCSys
I/O, Intelligent parallel.	9657	CreMicro
I/O, Parallel, sixteen 8-bit ports.	9620A	CreMicro
I/O, Parallel, 32 terminated inputs, 32 latched outputs.	96103	CreMicro
I/O, Printer interface.	9625	CreMicro
I/O Processor module	9642	CreMicro
I/O, signal switching, 8 solid-state relays, 16 mechanical relays, 32-transistors, 16 analog switches.	GMS6504	GenMicro
I/O, 80-line digital I/O module.	MBK6821	MRCSys
Intelligent, time-date subsystem, quartz referenced, non-volatile source.	9661	CreMicro
Magnetic disk storage subsystem, 8-inch Winchester drives, 8-inch diskette drives or dual 5-inch diskette drives.	9670	CreMicro
Math, Arithmetic processor/memory module provides both dedicated binary fixed/floating point and 16 Kbyte memory.	9611	CreMicro
Memory, EPROM Programmer.	GMS6522	GenMicro
Memory, 16 Kbyte RAM, non-volatile.	9637A	CreMicro
Memory, 16 Kbyte static RAM, with parity, clock speed 1 or 2 MHz.	MEX6816-22S	Motorola
Memory, 32 Kbyte EPROM/RAM.	9616	CreMicro
Memory, 32 Kbyte non-volatile memory (battery backed).	GMS6524	GenMicro
Memory, 64 Kbyte RAM, accommodates 20 address lines.	9638	CreMicro
Memory, 64 Kbyte RAM, non-volatile.	9635	CreMicro
Memory, 64 Kbyte, 256 Kbyte, 1 Mbyte Dynamic RAM.	GMS6505	GenMicro
Memory, 65 Kbyte EPROM/ROM/RAM memory module.	MBK65KBM	MRCSys
Memory, 128 Kbyte EPROM/RAM.	GMS6508	GenMicro
Memory, 128 Kbyte RAM, up to 20 address lines.	9634	CreMicro
Memory, 256 Kbyte RAM, 200-ns access time.	9633	CreMicro

† Military Temperature Range (−55° to 125°C)

* Typical Value

Bold face indicates additional data is provided on the page noted.

MICROCOMPUTER-SUPPORT BOARDS (Cont'd)

Supported System Function	Part Number	Source
EXORbus		**(Cont'd)**
Multiple programmable timer, eight MC6840 triple-programmable timers.	9640A	CreMicro
Reed relay contact closure with 32 Form "A" contact sets.	96702	CreMicro
Speech synthesizer and badge encoder.	9623	CreMicro
Utility prototyping board.	9610	CreMicro
Utility prototyping board, buffered.	9612	CreMicro
Exorciser		
EPROM Programmer.	PP-6432	AppBusComp
I/O, Floppy controller.	FP950	AppBusComp
I/O, Video controller.	CRT-80	AppBusComp
Memory board.	MB-64	AppBusComp
IBM PC		
Controller, disk controller with DMA capability.	FG-107	Microlog
Controller, GPIB controller—backplate accepts GPIB stackable connectors directly; support for 5 languages; small format fits XT-type short slots.	ZT1444	Ziatech
Controller, Multifunction GPIB controller—backplate accepts GPIB stackable connectors directly; support for 5 languages; Multimodule expansion socket; battery back-up clock/calendar.	ZT 1488A	Ziatech
Controller, 8-inch Floppy disk controller.	FG-107	Microlog
Controller, 1280x968 color graphics processor, 256 colors from 4096 color look-up table, 100% IBM software compatible.	PG-1280	Matrox
Controller, 512x512 x 8-bit Image processor combines image digitization and display, includes software image processing subroutine library.	PIP-512	Matrox
Controller, 640x480 color graphics processor, 256 colors from 4096 color look-up table, 100% IBM software compatible.	PG-640	Matrox
High-speed PF474 string comparator.	PF-PC	Proximity
I/O, High-level analog and digital I/O system	DT2801	DataTrans
I/O, Low-level analog and digital I/O system	DT2805	DataTrans
I/O Multifunction I/O Board.	I/O A¢	AppBusComp
I/O, Multifunction I/O board for data acquisition and control	DT2806	DataTrans
I/O, SCSI Host adapter permits IBM PCXT and ATs to access disk drives and other SCSI peripherals. Includes 8K ROM driver, parity.	ADP-31A	NCR
I/O Simultaneous sample and hold analog and digital I/O	DT2818	DataTrans
I/O, Single board analog and digital I/O	DT2808	DataTrans
I/O, Video subsystem for video digitization and display	DT2803	DataTrans
I/O, Voice Synthesizer—64 unique phonems for unlimited vocabulary, on-board 4W audio amplifier.	MSI-VS01	MicroCompSys
Memory, 0.5 Mbyte memory board.	AI-1512	AppBusComp
Memory, 256 Kbyte RAM expansion 200-ns access time, 400-ns cycle time.	FG-102	Microlog
Memory, 384 Kbyte RAM expansion.	FG-122	Microlog
Memory, 512Kb DRAM, parity, RS232-C.	CI-PCMT	Chrislin
Multifunction, Includes: 384K expansion memory, serial port, parallel port, game port, real time clock/calendar.	FG-122	Microlog
Multifunction memory board.	MAGA A¢	AppBusComp
I/O Channel		
Controller, Winchester floppy disk controller. Controls 5-1/4 inch Winchester or 5-1/4-inch/8-inch floppy disk drives, 4 Kbyte FIFO buffer.	M68RWIN	Motorola
Converter, A/D input expander module, adds 8/16 additional differential/single ended inputs to MVME600.	**MVME601**	**Motorola** (2112)

Supported System Function	Part Number	Source
Converter, 12-bit A/D converter, 8/16 differential/single-ended channels with four full-scale input voltage ranges of 0.5, 1.0, 5.0 or 10.0 V.	**MVME600**	**Motorola** (2112)
Converter, 16/32-channel differential/single-ended intelligent A/D conversion. Controls 12-bit A/D converter and multiplexed analog inputs from 16/32 channels.	M68RAD1-1	Motorola
iSBC		
Advanced data communications processor offers three HDLC/SDLC half/full duplex communications channels-optional ASYNC/SYNC on two channels, supports RS232C (including modem support) CCITT V.24 or RS442A/449 interfaces, on-board DMA supports 800K baud operation, self-clocking NRZI SDLC loop data interface, 16Kbytes static RAM, two iSBX bus connectors.	iSBC88/45	Intel
Controller, Controls up to four soft sectored SMD interface compatible disk drives, 12 Mbyte to 2.4 Gbyte per controller, on-board diagnostic, ECC and full sector buffering.	iSBC220	Intel
Controller, Flexible diskette controller for most single and double density disk drives, on-board, iSBX bus for additional functions, read and write on single or multiple sectors.	iSBC208	Intel
Controller, Generic Winchester controller for up to four 5-1/4, 8 or 14-inch Winchester disk drives, compatible with standard multibus, supports ANSI X3T9/1226 standard interface. On-board diagnostics and ECC plus full sector buffering.	iSBC215	Intel
Controller, Intelligent communications controller with 4 programmable USART channels, 8085A CPU, clock, 16 Kbytes dual-port RAM, 12-level programmable vectored interrupt control, RS232C drivers and receivers.	iSBC544	Intel
Controller, Intelligent digital I/O Controller with up to four microprocessors, 3 MHz 8085A central control processor, three operational modes-stand-along digital controller, multibus master, intelligent slave (slave to multibus master); 2 Kbytes dual port static RAM, sockets for up to 8 Kbytes of 2758, 2716, 2732 EPROms; 48 programmable parallel I/O lines, three programmable counters, 12 levels of programmable interrupt control.	iSBC569	Intel
Controller, Single density flexible diskette controller has direct compatibility with most soft-sectored standard 8-inch and 5-1/4-inch drives, DMA I/O, support by cp/M operating system.	iSBC204	Intel
Controller, 4-Channel communications controller, 4 RS232C or 20 mA current loop buffered USART channels plus Auto-Call Unit Interface with programmable baud rates.	iSBC534	Intel
Controller, 1/4-inch tape drive interface provides tape backup capability for iSBC215G generic Winchester controller. Supports transfer rates of 90 Kbyte, 30 Kbyte or 17 Kbyte/s depending on tape speed.	iSBC217B	Intel
I/O, Combination I/O expansion, 48 programmable I/O lines with sockets for interchangeable line drivers and terminators, synchronous/asynchronous communications interface with RS232C drivers and receivers, eight maskable interrupt request lines with pending interrupt register, 1 ms interval timer.	iSBC517	Intel
I/O, Multichannel bus to iLBX bus interface data rates up to 5.3 Mbytes/sec, addresses up to 16 Mbytes iLBX bus memory.	iSBC580	Intel
I/O, Optically isolated, up to 48 digital optically isolated input/output data lines, compatible with iSBC 80 series, choice of: 24 fixed input lines, 16 fixed output lines, 8 programmable lines, provisions, for plug-in optically isolated receivers, drivers, and terminators.	iSBC556	Intel

† Military Temperature Range (−55° to 125°C)

* Typical Value

Bold face indicates additional data is provided on the page noted.

MICROCOMPUTER–SUPPORT BOARDS (Cont'd)

Supported System Function	Part Number	Source	Line
iSBC		**(Cont'd)**	
I/O, Programmable expansion with 72 I/O lines and sockets for interchangeable line drivers and terminators, jumper selectable I/O port addresses and 0.5, 1.0, 2.0, or 4.0 ms interval timer, eight maskable interrupt request lines with priority encoded and programmable interrupt algorithms.	iSBC519	Intel	
Memory, Bubble memory, 512 Kbyte, automatic error correction, DMA capability non-volatile storage.	iSBC254S	Intel	
Memory, iLBX 128 Kbyte RAM allows access to both multibus and iLBX interfaces, single bit error correction and double bit error detection, 16 Mbyte adressing capability.	iSBC028CX	Intel	
Memory, iLBX 256 Kbyte RAM allows access to both multibus and iLBX interfaces, single bit error correction and double bit error detection, 16 Mbyte adressing capability.	iSBC056CX	Intel	
Memory, iLBX 512 Kbyte RAM allows access to both multibus and iLBX interfaces, single bit error correction and double bit error detection, 16 Mbyte adressing capability.	iSBC012CX	Intel	5
Memory, Multimodule expansion board	iSBC251	Intel	
Memory, Univerbal site memory expansion board supports EPROM, ROM, E^{2}PROM, SRAM, IRAM and NURAM. Contains sixteen 28-pin sockets, iLBX Bus or multibus selectable.	iSBC428	Intel	
Memory, up to 16 Kbyte EPROM expansion plugs directly into iSBC 86/12A single board computer.	iSBC340	Intel	
Memory, 0.5-Mbyte dual-port memory board	iSBCMEM/312	Intel	
Memory, 1 Mbyte ECC RAM, iLBX	iSBC010CX	Intel	10
Memory, 1 Mbyte Parity RAM, iLBX, synchronous interface	iSBC010EX	Intel	
Memory, 1-Mbyte dual-port memory board	iSBCMEM/310	Intel	
Memory, 2 Mbyte advanced 4 Mbit controller	iSBC264	Intel	
Memory, 2 Mbyte ECC RAM, iLBX	iSBC020CX	Intel	
Memory, 2 Mbyte Parity RAM, iLBX, synchronous interface	iSBC020EX	Intel	15
Memory, 2-Mbyte dual-port memory board	iSBCMEM/320	Intel	
Memory, 4 Kbyte of static RAM directly to iSBC 80/24 or iSBC 88/40 single board computers, 0.5 watts incremental power dissipation.	iSBC301	Intel	
Memory, 4 Mbyte Parity RAM, iLBX, synchronous interface	iSBC040EX	Intel	
Memory, 4-Mbyte dual-port memory board	iSBCMEM/340	Intel	
Memory 8 Kbyte RAM expansion diectly to iSBC 86/05 and iSBC 88/25 single board computers, single +5V supply.	iSBC302	Intel	20
Memory, 28-pin multimodule EPROM with sockets for up to 64 Kbyte of expansion with 27128 EPROMS.	iSBC341	Intel	
Memory, 32 Kbyte of dual port dynamic RAM and plugs directly into iSBC86/12A single board computer.	iSBC300	Intel	
Memory, 32 Kbyte RAM expansion through direct multibus interface, on-board parity generator/checker and error status register, jumper selectable base address on any 4 Kbyte boundary within a 16 Mbyte address space.	iSBC032A	Intel	
Memory, 64 Kbyte EPROM expansion via direct multibus interface, switch selectable base address on 4 Kbyte boundaries for each memory bank.	iSBC464	Intel	
Memory, 64 Kbyte RAM expansion through direct multibus interface, on-board parity generator/checker and error status register, jumper selectable base address on any 4 Kbyte boundary within a 16 Mbyte address space.	iSBC064A	Intel	25
Memory, 128 Kbyte of dual port RAM expansion for iSBC 86/30 board, single-bit error correction.	iSBC3042	Intel	
Memory, 128 Kbyte of dual port RAM expansion for iSBC 86/30 single board computer.	iSBC304	Intel	

Supported System Function	Part Number	Source	Line
Memory, 128 Kbyte parity RAM multimodule expansion for iSBC188/48 single board computer.	iSBC307	Intel	
Memory, 128 Kbyte RAM, direct IEEE P796 multibus interface, single-bit error correction and double bit error correction via Intel 8206 device.	iSBC028C	Intel	
Memory, 128 Kbyte RAM expansion through direct multibus interface, on-board parity generator/checker and error status register, jumper selectable base address on any 4 Kbyte boundary within a 16 Mbyte address space.	iSBC028A	Intel	30
Memory, 256 Kbyte RAM, direct IEEE P796 multibus interface, single-bit error correction and double bit error correction via Intel 8206 device.	iSBC056C	Intel	
Memory, 26 Kbyte RAM expansion through direct multibus interface, on-board parity generator/checker and error status register, jumper selectable base address on any 4 Kbyte boundary within a 16 Mbyte address space.	iSBC056A	Intel	
Memory, 512 Kbyte Parity RAM, iLBX, synchronous interface	iSBC012EX	Intel	
Memory, 512 Kbyte RAM, direct IEEE P796 multibus interface, single-bit error correction and double bit error correction via Intel 8206 device.	iSBC012C	Intel	
Memory, 512 Kbyte RAM, direct multibus interface to iSBC86, iSBC88 or iSBC 80 single board computer; on-board parity generator/checker and error status register.	iSBC012B	Intel	35
iSBX			
Controller, Flexible disk controller is software and hardware compatible replacement for iSBX 218 module. Controls most single/double density and single/double sided floppy drives, read and write on single or multiple sectors.	iSBX218A	Intel	
Controller, Floppy disk controller—supports any combination of 5-1/4, 8 inch, single or double side/density drives, IBM standard formats. Western Digital 2793/1793 software interface.	SBSxFDC	SingleBoard	
Controller, Floppy disk controller, 5- 1/4 or 8-inch single or double density, up to 4 drives, DMA or I/O operation	CBX-FDC	Comark	
Controller, Video alpha-numeric controller provides either black and white or eight color displays in 7x9, 5x7 or 6x8 character fonts, on-board keyboard and light pen interface, 50 or 60Hz frame rate operation.	iSBX270	Intel	
Controller, Video graphics controller interfaces to either black and white or color display monitors on-board refresh memory supports 512x512 b&w or 256x256 eight color display resolution, drawing commands include line, arc, circle, rectangle, character, area fill, pan and scroll.	iSBX275	Intel	40
Controller, 640 x 400 color graphics, on-board display controller executes graphics primitives.	MSBX-800	Matrox	
I/O, Analog input module with 16 SE/8DI channels	DTX311	DataTrans	
I/O, Analog output module, 8-channel D/A	DTX328	DataTrans	
I/O, Analog to Digital, 16 differential or 32 single-ended inputs 12-bit resolution	CBX-AD832	Comark	
I/O, Bit serial communications multimodule, provides HDLC/SDLC half/full duplex communications channel for iSBX bus compatible microcomputers, supports one RS232C or RS449/442A interface, software programmable baud rate up to 64K baud.	iSBX352	Intel	45
I/O, Digital I/O module	DTX350	DataTrans	
I/O, Dual serial, asynchronous or bisynchronous bit-sync operation, two FDX transmitters, DMA	CBX-S1200	Comark	
I/O, Expands DTX311 to 64SE/32 DI channels	DTX311EX	DataTrans	
I/O, Host adapter from SBX to SASI/RS-232C.	SBX/SASI	EnergySci	
I/O, Host adapter from SBX to SCSI and QIC-02	SCSI/QIC	EnergySci	50
I/O, IEEE-488 GPIB interface supplied with cable and MCS-80/85 or iAPX 86/88 software drivers.	μDX-488	MicroDesigns	

† Military Temperature Range (−55° to 125°C)

* Typical Value

Bold face indicates additional data is provided on the page noted.

MICROCOMPUTER-SUPPORT BOARDS (Cont'd)

Supported System Function	Part Number	Source	Line
iSBX		**(Cont'd)**	
I/O, Parallel I/O multimodule, iSBX bus compatible expansion, 24 programmable I/O lines with sockets for interchangeable line drivers and terminators, three jumper selectable interrupt request sources.	iSBX350	Intel	
I/O, Parallel, 24 programmable lines, bidirectional bus drivers	CBX-DI240	Comark	
I/O, Serial I/O multimodule, iSBX bus compatible I/O expansion, programmable synchronous/asynchronous communications channel with RS232C or RS4449/442 interface, software programmable baud rate generator, two programmable 16 bit BCD or binary timers/event counters.	iSBX351	Intel	
Math, Fixed/floating point math expansion 4MHz operation, fixed point single and double precision (16x32-bit), floating point double precision (32-bit), binary data formats.	iSBX331	Intel	
Math, Floating point math expansion, 4MHz operation, single (32-bit)/double (64-bit) precision arithmetic and data manipulation commands, add, subtract, multiply and divide functions.	iSBX332	Intel	5
Math, Numeric data processor provides high speed fixed and floating point functions for iSBC86/88, and iAPX86/88 systems, supports seven data types including single and double precision integer and floating point.	iSBC337A	Intel	
Memory, Bubble memory, 128 Kbyte, automatic error correction, compatible with DMA controller, non-volatile storage.	iSBX251	Intel	
Multifunction, GPIB multimodule has talker/listener functions including: addressing, handshake protocol, service request, serial and parallel polling schemes; controller functions include: transfer control, service requests and remote enable.	iSBX488	Intel	
Multifunction, real-time clock, two synchronous/asynchronous serial ports, 2 Kbyte or 8 Kbyte CMOS RAM, battery backup.	µDX-221	MicroDesigns	
LSI-11			
Converter, high-speed high-resolution A/D	DT2757	DataTrans	10
I/O, Analog Input for simultaneous sample and hold	DT3368 DT3388	DataTrans DataTrans	
I/O, Analog input subsystem, 32 single-ended, 16 differential inputs, 12-bit resolution.	RTI-1250	AD	
I/O, Analog output subsystem, four channels, 12-bit resolution.	RTI-1252	AD	
I/O, Combination analog subsystem, 16 single-ended, 8 differential inputs, 2-channel output, 12-bit I/O resolution.	RTI-1251	AD	15
I/O, DMA analog input system	DT2752	DataTrans	
I/O, DMA Analog output system	DT2751	DataTrans	
I/O, Intelligent color graphics interface	DT2750	DataTrans	
I/O, QIC 2 Tape controller.	IS-QIC2	IntSolutions	
I/O, Simultaneous sample and hold	DT2758	DataTrans	20
I/O, 5-1/2 inch Winchester (ST506 compatible) controller.	RL101	IntSolutions	
Memory, RAM, (dual ported) 512 Kbyte to 1 Mbyte, or 1, 2 and 3 Mbyte versions.	IS-68XM-XXX	IntSolutions	
Programmable real-time clock board	DT2769	DataTrans	
Microboard			
Controller, Floppy disk interface, SASI drives up to four floppy disks, standard, mini or micro.	CDP18S651	RCA	
Converter, A/D and D/A, unipolar only, 8-bit resolution.	CDP18S654	RCA	25
Converter, A/D and D/A, unipolar or bipolar operation, 8-bit resolution.	CDP18S644	RCA	

Supported System Function	Part Number	Source	Line
Converter, A/D, 8 channels, differential or 16 single-ended inputs, unipolar input, 8-bit resolution.	CDP18S658	RCA	
Converter, A/D, 8 differential or 16 single-ended inputs, 12- or 8-bit resolution.	CDP18S643A	RCA	
Converter, A/D, 8 differential or 16 single-ended inputs, 8-bit resolution.	CDP18S648	RCA	
Converter, D/A, two channels, unipolar or bipolar operation, 8 bits resolution.	CDP18S647	RCA	30
Converter, D/A, 2 channels, unipolar output, 8-bit resolution.	CDP18S657	RCA	
Converter, D/A, 2-channel, 12 or 8 bit resolution.	CDP18S642	RCA	
Counter/timer (eight independent circuits).	CDP18S650	RCA	
Direct connect auto model (Bell compatible) 1200 baud.	CDP18S653V2	RCA	
Direct connect auto model (Bell compatible) 300 baud.	CDP18S653V1	RCA	35
Direct connect auto modem (CCITT compatible) 1200 baud.	CDP18S653V4	RCA	
Direct connect auto modem (CCITT compatible) 300 baud.	CDP18S653V3	RCA	
I/O, Digital, control and display module, 256 Kbyte RAM, 4 control switches, six digit hex displays.	CDP18S640A	RCA	
I/O, Digital, control and display module 256 Kbyte RAM, 4 control switches, six digit hex displays, six LED indicators UART terminal interface.	CDP18S640A1	RCA	
I/O, Digital UART Interface.	CDP18S641	RCA	40
I/O, Optically isolated dc interface, eight input and eight output signal lines.	CDP18S663	RCA	
I/O, Parallel interface, two 8-bit input ports and three 8-bit outbit ports with data strobe signals.	CDP18S646	RCA	
I/O, Parallel Opto 22 module interface, 24 bidirectional lines.	CDP18S662	RCA	
Memory, 4 Kbyte EPROM, permanent data retention.	CDP18S627	RCA	
Memory, 4 Kbyte RAM.	CDP18S620	RCA	45
Memory, 8 Kbyte RAM.	CDP18S623A	RCA	
Memory, 8 Kbyte RAM, battery backup.	CDP18S622	RCA	
Memory, 8/16/32 Kbyte ROM/PROM, permanent data retention.	CDP18S625	RCA	
Memory, 16 Kbyte RAM.	CDP18S621	RCA	
Memory 32 Kbyte RAM.	CDP18S629	RCA	50
Memory, 32/64 Kbyte EPROM/ROM.	CDP18S626	RCA	
Multifunction, Memory and I/O module, 2 Kbytes RAM, 8 Kbytes ROM, forty programmable I/O lines.	CDP18S660	RCA	
Multifunction, Memory and tape, 1-Kbyte RAM, 24-Kbyte ROM, two cassette tape ports.	CDP18S652	RCA	
Micro Bus			
Controller, Parallel printer controller emulates 4221 line printer controller, optional 64 Kb buffer, Centronics interface.	DLP1	IntelComp	
Magnetic Tape Coupler, interfaces DG desktop generation to 1/2 inch tape drives equipped with an industry standard formatter, including streaming tape drives.	DMT1	IntelComp	55
Memory, 523 Kbytes increments through 2M total capacity dynamic RAM, 18 bits wide including parity.	DMM1	IntelComp	
Micromodule			
I/O, Analog input subsystem, 32 single-ended, 16 differential inputs, 12-bit resolution.	RTI-1230	AD	
I/O, Analog input, 8 differential channels, fused imputs, 12-bit resolution.	MP7608-I	Burr-Brown	
I/O, Analog input, 8 differential channels, 200 Vdc protection, 12-bit resolution.	MP7608	Burr-Brown	
I/O, Analog input, 8-channel differential input, 12-bit resolution.	MP7208	Burr-Brown	60

† Military Temperature Range (−55° to 125°C)

* Typical Value

Bold face indicates additional data is provided on the page noted.

MICROCOMPUTER–SUPPORT BOARDS (Cont'd)

Supported System Function	Part Number	Source	Line
Micromodule	**(Cont'd)**		
I/O Analog input, 16-channel single-ended input, 12-bit resolution.	MP7216	Burr-Brown	
I/O, Analog input, 16-channel single-ended input, 12-bit resolution.	MP7218	Burr-Brown	
I/O, Analog input, 32 differential (64 single-ended), 2-channel output, 8-bit resolution.	MP7432-AO	Burr-Brown	
I/O, Analog input, 32 differential (64 single-ended), 8-bit resolution.	MP7432	Burr-Brown	
I/O, Analog output subsystem, four channel output, 12-bit resolution.	RTI-1232	AD	5
I/O, Analog output, 4-channel isolated-fused outputs, 8-bit resolution.	MP7504	Burr-Brown	
I/O, Analog output, 4-channel output, 12-bit resolution.	MP7104	Burr-Brown	
I/O, Combination analog subsystem, 32 single-ended, 16 differential inputs, two channel output, 12-bit resolution.	RTI-1231	AD	
I/O, Digital input, 24 channels, isolated, dry-contact closures.	MP710	Burr-Brown	
I/O, Digital input, 24 channels, isolated, wet-contact closures.	MP710-NS	Burr-Brown	10
I/O, Digital output, 32 channels, isolated, reed-relay protection.	MP702	Burr-Brown	
MS DOS 2.0			
Memory, Hard disk, tape and cartridge same as Targa I except the unit can have two drives either one of which could be 10, 15, or 31MB hard disk with tape backup (25 or 55MB) or removable 5MB cartridge.	Targa II	CMCIntl	
Memory, Hard disk, tape and cartridge same as Targa II with expansion slots available for adding up to 5 additional IBM PC compatible cards.	Targa III	CMCIntl	
Memory, Hard disk, tape and cartridge sub-system storage to IBM PC, XT and compatibles including Compaq, Columbia, Corona, Tava, Televideo 1605. Capacities of 10,15,31MB. 5MB removable cartridge media, or 1/4 tape in 25 or 55Mbyte capacity.	Targa I	CMCIntl	
Telephone add-on personal telephone management system (card) that turns IBM PC compatibles or an XT into a sophisticated telephone recording and playback system. It will answer calls, distributor messages, automatically dial, call forward and can be remotely controlled. Requires 192K or RAM in a PC.	pc Dial/Log	CMCIntl	15
Multibus			
Communications controller, Maximum GPIB data transfer rate of 1 Mb/s, 2Kbyte dual port RAM mappable anywhere in 1 Mb memory space.	BLC8488	MicroInds	
Communications controller, USART, RS232C.	MS-534	Comark	
Controller, Color Graphics Display Processor. 640x480x8 pixel, 4096 color look-up table, draws at 10 K vectors/second.	SX-900	Matrox	
Controller DMA board for high speed transfer of 8 or 16 bit data. Controls actual transfer of up to 65,536 words of data between memory and an external device.	MIB501A	MicroInds	
Controller, double density diskette controller to interface and iSBC to a double density flexible disc drive. Soft sectored format allowing 500 Kbyte data storage capacity per double density diskette. DMA logic.	MIB202	MicroInds	20
Controller, Floppy disk controller. Single or double density, up to 4 drives with 8 surfaces.	BLX218	MicroInds	
Controller, Graphics display controller, NEC 7220, 80186 display list processor, 1024x1024x4 pixels, 16 color, 4096 color look-up-table, light pen interface, one RS232C.	GDC-186	InnovRes	
Controller, High performance disk controller, SMD disk interface supports data rate up to 2.0 Mbytes/sec (enhanced SMD), DMA up to 3.0 Mbytes/sec, 2 Kbytes or 8 Kbytes FIFO buffer, automatic ECC correction, programmable DMA throttle. Drivers for UNIX and RMX-86 supplied.	450	Xylogics	
Controller, high performance tape controller, Pertec formatted interface, supports tape speeds from 12.5 ips. to 125 ips., densities of 800, 1600, 3200, and 6250 fcpi., DMA data rate up to 2.8 Mbytes/sec, supports either start/stop or streaming tape drives. Drivers for UNIX and RMX-86 supplied.	472	Xylogics	
Controller, high-speed controller with on-board DMA and dual ported memory (64Kbytes). No DMA support is required from system CPU board.	ZT87	Ziatech	25
Controller, High-speed GPIB controller—8K RAM: 20-bit addressing, 8 interrupts; 32 I/O ports; operating system—iRMX-86 ISIS, XENIX: data rate—300 Kbytes on-board DMA.	ZT 85/38	Ziatech	
Controller, Intelligent color video controller	CD21/7052	CentData	
Controller, Intelligent floppy disk controller, controls 4 5 1/4 ' and 8' floppy disk drives concurrently.	CD21/4130	CentData	
Controller, Intelligent GPIB controller—high-level user interface, supports 16-bit memory addressing, 1Kbytes RAM buffering.	ZT 80	Ziatech	
Controller, multifunction controller, supports ESDI disk drives and QIC-02 1/4 inch tape drives. Disk data rates up to 10 MHz, DMA up to 2.5 Mbytes/sec, separate disk and tape buffers allow simultaneous transfers from disk and tape, automatic ECC correction, programmable DMA throttle. Drivers for UNIX and RMX-86 supplied. Software compatible with 421 and 423.	422	Xylogics	30
Controller, Multifunction controller, supports SMD disk drives and QIC-02 1/4 inch tape drives. Disk data rates up to 10 MHz. (standard SMD data rate), DMA up to 2.5 Mbytes/sec, Separate disk and tape buffers allow simultaneous transfers from disk and tape, automatic ECC correction, programmable DMA throttle. Drivers for UNIX and RMX-86 supplied. Software compatible with 421 and 423.	423	Xylogics	
Controller, multifunction controller, supports ST506 disk drives and QIC-02 1/4 inch tape drives. Disk data rates up to 5 MHz, DMA up to 2.5 Mbytes/sec, separate disk and tape buffers allow simultaneous transfers from disk and tape, automatic ECC correction, programmable DMA throttle. Drivers for UNIX and RMX-86 supplied. Software compatible with 422 and 423.	421	Xylogics	
Controller, QIC-02 Cartridge tape controller	CD21/4029	CentData	
Controller, Winchester disk, up to two drives with up to 8 read/write heads each.	WD1002-SHD	Western	
Controller, Winchester/floppy disk, for up to two 5-1/4-inch Winchester and up to four 5-1/4-inch floppy-disk drives.	WD1002-MTB	Western	35
Controller, Four channel communications controller asynchronous/synchronous, data format and parity, band rates to 19.2K; maskable interrupts, modem control, error detection, 4 controlled channels.	BLC8534	MicroInds	
Controller, 1/2 -inch magnetic tape, DMA, IEEE 796 addressing	MT86	Comark	
Controller, 1/2 -inch magnetic tape, 20-bit memory mapped	MT80	Comark	
Controller, 8- or 5- 1/4 -inch, single or double side, double density, IBM compatible	MF85	Comark	
Controller, 1024x768 color graphics processor, 256 colors from 4096 color look-up table.	GXB-1000A	Matrox	40
Controller, 5 1/4 ' Floppy disk controller	CD21/4055	CentData	
Controller, 512x512x8 Image processor, includes software image processing subroutine library.	MIP-512	Matrox	
Controller, 8' Double density floppy disk controller	CD21/4015	CentData	

† Military Temperature Range (−55° to 125°C)

* Typical Value

Bold face indicates additional data is provided on the page noted.

MICROCOMPUTER-SUPPORT BOARDS (Cont'd)

Multibus (Cont'd)

Supported System Function	Part Number	Source
Controller, 8' Floppy disk controller, 4 drives, ECC, on-board data separator, ECC 32-bit computer generated code.	BLC8230	MicroInds
Converter, Analog-to-digital, 16 differential or 32 single-ended inputs, programmable gain, 12-bit resolution.	MCX-AD832	Comark
Converter, High-level A/D converter	DT711 DT712 DT772	DataTrans DataTrans DataTrans
Converter, High-level A/D expansion board for DT712	DT713	DataTrans
Converter, Low-level A/D converter	DT714 DT774	DataTrans DataTrans
Converter, Low-level A/D expansion board for DT714	DT715	DataTrans
I/O, Analog board	DT732	DataTrans
I/O, Analog, High level intelligent system, 16 single-ended or 8 differential channels.	DT3752	DataTrans
I/O Analog I/O board with memory: 32 single ended/16 differential channels. No output channels. Programmable gain amplifier.	MIB8737-1	MicroInds
I/O Analog I/O board with memory; 32 single ended/16 differential channels. 2 Output channels. Programmable gain amplifier.	MIB8737-3	MicroInds
I/O, Analog input expander, 16 differential channels, 400 V isolation (must be used with MP8418 series).	MP8418-ISOE	Burr-Brown
I/O, Analog input expander, 48 differential, 96 single-ended analog input channels (must be used with MP8418 series).	MP8418-EXP	Burr-Brown
I/O, Analog input system, (16 single-ended or 8 differential), (32 single-ended or 16 differential) or (64 single-ended or 32 differential) channels.	DT1742	DataTrans
I/O, Analog input, 8 differential, 8-bit resolution.	MP8608	Burr-Brown
I/O, Analog input, 8 differential, 8-bit resolution, two channel analog output.	MP8608-AO	Burr-Brown
I/O, Analog input, 15 channel differential, 31 channel single-ended, resistor-programmable gain, 12-bit resolution.	MP8418	Burr-Brown
I/O, Analog input, 15 channel differential, 31 channel single-ended, 2-channel output, resistor-programmable gain, 12-bit resolution.	MP8418-AO	Burr-Brown
I/O, Analog input, 15-channel differential, 31-channel single-ended, 12-bit resolution, software programmable gain.	MP8418-PGA	Burr-Brown
I/O, Analog input, 15-channel differential 31-channel single-ended, 2-channel output 12-bit resolution, software programmable gain.	MP8418-PGA-AO	Burr-Brown
I/O, Analog input, 16 single-ended, 2 analog outputs, 8-bit resolution.	MP8616-AO	Burr-Brown
I/O, Analog input, 16 single-ended, 8-bit resolution.	MP8616	Burr-Brown
I/O, Analog input, 16-channel RTD input digitizer, excitation resistor compensation, 12-bit resolution.	MP8430	Burr-Brown
I/O, Analog input, 16-channel, 1000 V transformer isolated, 12-bit resolution.	MP8450	Burr-Brown
I/O, Analog input, 32 channel differential, 64 channel single-ended, two analog channel outputs, 8-bit resolution.	MP8632-AO	Burr-Brown
I/O, Analog input, 32-channel differential, 64-channel single-ended, 8-bit resolution.	MP8632	Burr-Brown
I/O, Analog, Isolated low level, 4 differential-input channels.	DT3755	DataTrans
I/O, Analog, low-level intelligent system, 16 single-ended or 8 differential channels.	DT3754	DataTrans
I/O, Analog output board	DT724	DataTrans
I/O, Analog output expansion modules, single channel of digital to analog conversion, 10-bit resolution, concurrent wattage and current modes.	BLX321	MicroInds
I/O, Analog output expansion system.	DT3776	DataTrans
I/O, Analog output, 4 channels, individual D/A converters, high-level inputs, 12-bit resolution.	MP8304	Burr-Brown
I/O, Analog output, 4 channels, individual D/A converters (without cable).	MP8305	Burr-Brown
I/O, Analog output, 16 channels, 12-bit resolution, high-level inputs.	MP8316-V	Burr-Brown
I/O, Analog output, 16 channels, 12-bit resolution, 4-20 mA inputs.	MP8316-I	Burr-Brown
I/O, Analog subsystem combination, 32 single-ended, 16 differential analog inputs, two analog outputs, 12-bit resolution.	RTI-732	AD
I/O, Analog subsystem, four analog-output channels, 12-bit resolution.	RTI-724	AD
I/O, Analog subsystem, 32 single-ended, 16 differential analog-input channels, 12 bit resolution.	RTI-711	AD
I/O, Central Services Module, integrates Multibus II central systems functions on a single board.	iSBCCSM/001	Intel
I/O, Current loop adapter provides current loop conversion for RS232C I/O channels, extends series/80 capability.	BLC530	MicroInds
I/O, Digital input, 5 channels, isolated, time measurement.	MP821-05	Burr-Brown
I/O, Digital input, 15 channels, isolated, time measurement.	MP821-15	Burr-Brown
I/O, Digital input, 24 channels, isolated, ac sense inputs.	MP810-AC	Burr-Brown
I/O, Digital input, 24 channels, isolated contact closure input.	MP810	Burr-Brown
I/O, Digital input, 24 channels, isolated, debounce circuit.	MP810-DB	Burr-Brown
I/O, Digital input, 24 channels, isolated, low-voltage inputs.	MP810-LV	Burr-Brown
I/O, Digital input, 24 channels, isolated, voltage input.	MP810-NS	Burr-Brown
I/O, Digital output, 16 channels, isolated, relay output.	MP801	Burr-Brown
I/O, Digital output, 32 channels, isolated relay output.	MP802	Burr-Brown
I/O, Digital to analog output, 8-channel 12-bit or 4-channel 12-bit.	DT1842	DataTrans
I/O, Digital-to-analog output, 8-channel 8-bit or 4-channel 8-bit.	DT1843	DataTrans
I/O, Expansion board. Independently controlled 8 bit parallel ports, interrupts for reduced system overhead control, automatic input port interrupt (8 external available), switch selected port address, variable-width strobed outputs.	BLC508	MicroInds
I/O, Extender board, power isolation allows removal/insertion of boards without loss of data or functions, complete access to a series/80 board for troubleshooting or debugging.	BLS8610	MicroInds
I/O, Floppy disk controller.	V8004	Century
I/O, High level analog output, 16 single-ended or 8 differential.	DT1841	DataTrans
I/O, High-level analog expander.	DT3772	DataTrans
I/O, High-level analog-to-digital output, 16 single-ended or 8 differential channels.	DT1751	DataTrans
I/O, Intelligent octal serial interface.	B1044	CentData
I/O, Intelligent SCSI host adapter permits host-to-peripheral and host-to-host communication.	ADP-32	NCR
I/O, Isolated analog input system, 4 differential channels.	DT1748	DataTrans
I/O, Isolated analog system, 4 differential channels, 12-bit integrating analog to digital converter.	DT1759	DataTrans
I/O, Isolated low level analog expander.	DT3775	DataTrans
I/O, Low level Analog input, 16 single-ended or 8 differential inputs.	DT1755	DataTrans
I/O, Low level analog input, (16 single-ended or 8 differential), (32 single-ended or 16 differential) or (64 single-ended or 32 differential).	DT1744	DataTrans
I/O, Low-level analog expander.	DT3774	DataTrans

† Military Temperature Range (–55° to 125°C)

* Typical Value

Bold face indicates additional data is provided on the page noted.

MICROCOMPUTER-SUPPORT BOARDS (Cont'd)

Supported System Function	Part Number	Source	Line
Multibus		**(Cont'd)**	
I/O, Multibus II to Multibus I Link Board.	iSBCLNK/001	Intel	
I/O, Multi-media controller.	B1030	CentData	
I/O, Oct 21 serial interface	CD21/3043	CentData	
I/O, Parallel, 24 programmable lines bidirectional, IC sockets for line drivers, I/O terminators.	CMX-D1240	Comark	
I/O, Quad serial interface	CD21/3038	CentData	5
I/O, SASI host adaptor/hard disk controller.	V8007	Century	
I/O, Simultaneous sample and hold for high level, single-ended analog inputs	DT778	DataTrans	
I/O, Terminal controller.	B1031	CentData	
I/O, Video controller.	V8006	Century	
I/O, 4 channel serial multiplexer.	VM804	Century	10
I/O, 24-Channel Sequence of Events Input Board	MP840	Burr-Brown	
I/O, 72-Channel TTL I/O with Output Readback	MP830-72	Burr-Brown	
Intelligent communications interface	CD21/3500	CentData	
Intelligent analog peripherals multifunction expander	DT3762	DataTrans	
Math, floating point math multi-module plugs directly into any iSBX bus compatible host board offering incremental on board expansion. Single and double precision arithmetic and data manipulation commands. Software reset control.	MIB332	MicroInds	15
Math, High speed math unit; fixed point integer arithmetic, 16 and 32 bit format. Floating point arithmetic. Compare and test operation relative to floating point constant. Float to fix and fix to float conversions. Multimaster access.	MIB310A	MicroInds	
Memory & PROM/RAM/EEPROM board.	CD23/2200	CentData	
Memory, add-on—128K.	V8009	Century	
Memory, CMOS RAM 4 Kbytes memory/battery backup board. Base address selectable to start on any 4K memory address boundary. On board rechargeable batteries and charging circuitry.	MIB094	MicroInds	
Memory, Dynamic RAM board, 128K-2Mb EDC.	B1027	CentData	20
Memory, EPROM/RAM/EEPROM board with real-time clock/calendar.	B1035	CentData	
Memory, Expansion module: 256 Kb RAM which augments PM68K single board computer.	MXK	Pacific	
Memory, Expansion module; 756K or 1, 3, 4 Mbytes, dual-ported RAM auguments PM68D Single Board Computer.	MXD	Pacific	
Memory, iLBX Cache memory board.	B1041	CentData	
Memory, LBX 512K to 2 Mbyte parity checking dynamic RAM board	CD21/2500	CentData	25
Memory, Mbyte to Mbyte dynamic RAM.	CD21/2110	CentData	
Memory Output features: 96 Discrete open collector outputs, resident diagnostics.	S80 OUTPUT	Acco	
Memory, Programmable RAM/EPROM and I/O board.	CD21/5232	CentData	
Memory, provides an additional 16K of CMOS memory with one bus slot, battery back-up of 96 hours, and resident diagnostics.	S80 MEM	Acco	
Memory up to 256 Kbytes CMOS RAM, EPROM 16, 32, 64, 128 or 256K bit devices, maximum capacity 1 Mbyte, RAM/EPROM mix, battery backup, 8/16-bit data, 24-bit address, real-time clock.	PSM-6663	Plessey	30
Memory, 2 Kbyte DRAM, single- and double-bit error detection, single-bit correction.	CI-796-EDC-2MB	Chrislin	
Memory, 2 Mbyte DRAM, on-board parity generator/checker and error status register.	CI-8086¢2MB	Chrislin	
Memory, 16 ROM/PROM expansion board jumper selectable address board.	MIB416	MicroInds	
Memory, 32 Discrete optically coupled inputs - 5 mA @ 5V, 4 serial differential ports (transmits up to 5000 feet), 4K RAM, 8K PROM, resident diagnostics, battery back-up.	S80 I/M	Acco	
Memory, 32 Kbyte dynamic RAM, hidden refresh, 4 K bank disable, parity, 8/16 bit operation, on-board 5V generation 24-bit addressing.	MR85-032	Comark	35
Memory, 32K or 64K RAM board expansion though direct interface. Address assignable anywhere within a 16 Mbyte address space. On-board parity generator checker and error status register.	MIB032A/064A	MicroInds	
Memory, 64 Kbyte dynamic RAM expansion for 8- and 16-bit bus masters; odd/even parity checker.	rMEM64K-BE	RELMS	
Memory, 64 Kbyte dynamic RAM, hidden refresh, 4 K bank disable, parity, 8/16 bit operation, on-board 5V generation, 24-bit addressing.	MR85-064	Comark	
Memory, 64 Kbyte dynamic RAM, 8 or 16 bit jumper selectable, on-board refresh.	rMEM64K-D	RELMS	
Memory, 96 Kbyte dynamic RAM, 350-ns access, hidden refresh, 4 K bank disable, parity, 8/16 bit operation, on-board 5V generation, 24-bit addressing.	MR85-096	Comark	40
Memory, 128 Kbyte dynamic RAM, hidden refresh, 16 K bank disable, parity, 8/16 bit operation, on-board 5V generation, 24-bit addressing.	MR86-128	Comark	
Memory, 128 Kbyte dynamic RAM, hidden refresh, 4 K bank disable, parity, 8/16 bit operation, on-board 5V generation, 24-bit addressing.	MR85-128	Comark	
Memory, 256 Kbyte dynamic RAM expansion for 8- and 16-bit bus masters, on-board transparent refresh or scheduled refresh.	rMEM256K-BE	RELMS	
Memory, 256 Kbyte dynamic RAM, hidden refresh, 16 K bank disable, parity, 8/16 bit operation, on-board 5V generation, 24-bit addressing.	MR86-256	Comark	
Memory, 384 Kbyte dynamic RAM, hidden refresh, 16 K bank disable, parity, 8/16 bit operation, on-board 5V generation, 24-bit addressing.	MR86-384	Comark	45
Memory, 512 Kbyte.	V8012	Century	
Memory, 512 Kbyte DRAM, on-board parity generator/checker and error status register.	CI-8086¢	Chrislin	
Memory, 512 Kbyte DRAM, single- and double-bit error detection, single-bit correction.	CI-796-EDC	Chrislin	
Memory, 512 Kbyte dynamic RAM, hidden refresh, 16 K bank disable, parity, 8/16 bit operation, on-board 5V generation, 24-bit addressing.	MR86-512	Comark	
Memory, 128K-2 Mbyte Parity checking dynamic RAM.	CD21/2140	CentData	50
Memory, 128K-512K Parity checking dynamic RAM.	CD21/2100	CentData	
Memory, 2 Mbyte DRAM, 24-bit addressing on Multibus and iLBXbus, 8/16 bit data, EDC correcting, two I/O ports, battery backup.	PSM-2DA	Plessey	
Memory, 2 Mbyte DRAM, 8/16-bit data, 20/24-bit address, byte parity, optional 1 Mbyte.	PSM-2P	Plessey	
Memory, 2 Mbyte DRAM, 8/16-bit data, 20/24-bit address, EDC correcting, optional 1 Mbyte.	PSM-2A	Plessey	
Memory, 2 Mbyte RAM with 8 K cache, full error detection and correction, can support dedicated 32-bit memory bus.	MB-2000	Matrox	55
Memory, 512 Kbyte DRAM, 24-bit addressing on Multibus and iLBX bus, 8/16-bit data, EDC correcting, two I/O ports, battery backup.	PSM-512DA	Plessey	
Memory, 512 Kbyte DRAM, 8/16-bit data, 20/24-bit address, byte parity, optional 512 Kbyte, 128 Kbyte.	PSM-512P	Plessey	
Memory, 512 Kbyte DRAM, 8/16-bit data, 20/24-bit address, EDC correcting, optional 256 Kbyte or 128 Kbyte.	PSM-512A	Plessey	
Memory, 64 Kbyte CMOS RAM, 8/16-bit data, 20-bit address, battery backup.	PSM-6463	Plessey	
Memory,PROM/ROM expansion board. 16K to 128K capacity, address assignable anywhere within 16M byte memory, switch selectable minimum access time from 35ns to 1435ns, operation in 8 or 16 bit mode.	BLC464	MicroInds	60
Miscellaneous, Enchanced digitalker expansion module speech synthesis	BLX281A	MicroInds	

† Military Temperature Range (−55° to 125°C)

* Typical Value

Bold face indicates additional data is provided on the page noted.

MICROCOMPUTER–SUPPORT BOARDS (Cont'd)

Multibus (Cont'd)

Supported System Function	Part Number	Source
Transformation Processor (Floating point processor for graphics applications)	WTE5300	Weitek

Multimodule

Supported System Function	Part Number	Source
Controller, GPIB controller interface—complete controller/talker/listener, device driver and example application software provided.	xSBX 20	Ziatech
I/O, Parallel I/O interface—48 programmable I/O lines;optional interrupt requests and handshaking, each connector provides 8 data lines ± 12V, +5V and ground for user interfacing.	zSBX 30	Ziatech

PCbus

Supported System Function	Part Number	Source
Memory, expandable dynamic RAM designed for Zenith 150/Z-160 PC's, game port or real time clock optional with battery back-up IBM-PC compatible.	Z-150MB	Teletek
Solids Modeling Engine (graphics accelerator)	WTE7100	Weitek

Proprietary

Supported System Function	Part Number	Source
Controller, Alphanumeric video board (25x40 or 25x80).	MSB/02VID-1	Brachman
Controller, Floppy disk controller for four drives.	**MFC04**	**Wintek (2118)**
Controller, In-circuit emulator for Apple, C64, VIC20, PET, AIM65, SYM-1, KIM-1, OSI, ATARI 400/800 supports 6502, 65SC02, 65SC802.	MMC/02ICE	Brachman
Controller Motor, Dual stepper motor controller. Manipulates 2 four-phase stepping motors in a micropositioning mode; divides each step into 255 steps.	SMCC-2	IndComp
Converter, Analog-to-digital. Controls up to 15 slave converter cards. 16 A/D inputs, 16 D/A outputs.	CMC-16/8	IndComp
Converter, Analog-to-digital, 12-bit, 16 channel	**MAI04**	**Wintek (2118)**
Converter, Digital-to-analog, 8-bit, 2 channel	**MAI20**	**Wintek (2118)**
Counter/timer module with battery	**MCT10**	**Wintek (2118)**
Driver/Sensor module with 4 optically isolated inputs and 8 open-collector drivers.	**MDS44**	**Wintek (2118)**
Driver/Sensor module with 8 optically isolated inputs.	**MDS08**	**Wintek (2118)**
Driver/Sensor module with 16 open-collector drivers.	**MDS80**	**Wintek (2118)**
Expansion board, 256 Kbyte RAM, 4 serial ports, parallel printer port, real-time clock with battery backup.	SEAT 256	Slicer
I/O, AC driver board for powering ac motors. Buffer 5 solid state optoisolated ac relays. LED indicators.	8266	Cortex
I/O, Cassette tape and RS-232 interface for 6800 control module.	**MCS00**	**Wintek (2118)**
I/O, DC driver board for dc solenoids and motors. 8 buffered 5-A Darlington transistors. Can also be used for driving stepper motors.	8233	Cortex
I/O, Driver board. Optoisolation for 4 input signals and up to 9 output signals. Dc bufered; status of signals shown on LEDs 2x7805 voltage regulator on board.	8279	Cortex
I/O, IEEE-488 Bus interface	**MGP00**	**Wintek (2118)**
I/O, Parallel and Serial, 64 parallel lines and 16 control lines (TTL levels), two RS-232C I/O ports.	Cortex401	Cortex
I/O SCSI adaptor, attached to high speed bidirectional parallel for connection to hard disk controller.	DSA-4046	Davidge
I/O, 2 additional RS-232 serial ports with full two way handshake (RTS, CTS, DTR, DCD). Baud rates from 110 to 38,400. One port configured for modem (DTE).	DSX-2232	Davidge
I/O, 8-Port RS-232 serial interface.	**MSI08**	**Wintek (2118)**
I/O, 16-channel, contact-closure input module.	MBKITB16CC	MRCSys
I/O, 16-channel, relay-output terminal board.	MBKOTB16RR	MRCSys
I/O, 64-Line parallel.	**MPI08**	**Wintek (2118)**
Memory, EPROM-programming adaptor.	MMC/EPA	Brachman
Memory, Expansion module with memory mapping.	**MRR49**	**Wintek (2118)**
Memory, Expansion with sockets for 56K RAM/ROM.	**MRR19**	**Wintek (2118)**
Memory, Expansion with 30K of RAM.	**MRR39**	**Wintek (2118)**
Memory, Switchable memory board (16 Kbyte).	MSB/02SMB	Brachman
Memory, 128 Kbyte 150-ns DRAM configurable as RAM under CP/M 3.0 and as disk emulator or print buffer under CP/M 2.2.	DSX-128K	Davidge
Miscellaneous, Backplane, 4-slot.	**ABP04**	**Wintek (2118)**
Miscellaneous, Backplane, 7-slot.	APP07	Wintek
Miscellaneous, Breadboard with parallel interface	MPB00	Wintek
Miscellaneous, 16-Button Keypad with 15 7-segment displays.	**MCI11**	**Wintek (2118)**
Prototyping board.	MSB/02PRT	Brachman

Q-bus

Supported System Function	Part Number	Source
Analog input expansion.	DT2774	DataTrans
Digital to analog expander.	DT3376	DataTrans
I/O, Analog input system with up to 64 single-ended or 32 differential channels, 12-bit A/D converter.	DT1762	DataTrans
I/O, Analog input, 32 single-ended channels, 12-bit resolution, resistor-programmable gain.	MP1216	Burr-Brown
I/O, Analog input, 32 single-ended channels, 12-bit resolution, software-programmable gain.	MP1216-PGA	Burr-Brown
I/O, Analog output system with four D/A converter outputs, four digital outputs, 8-bit resolution.	DT2767	DataTrans
I/O, Analog output with four D/A converter outputs, four digital outputs, 12-bit resolution.	DT2766	DataTrans
I/O, Analog output, 4 channels, 12-bit resolution, individual D/A converters.	MP1104	Burr-Brown
I/O, Analog with 16 single-ended or 8 differential channels, 11-bit analog A/D converter.	DT2781	DataTrans
I/O, DMA Analog input system for high-level inputs, 45 kHz throughput (single channel).	DT2782	DataTrans
I/O, DMA Analog input system for low level inputs.	DT2784	DataTrans
I/O, DMA analog output system for point plotting.	DT2771	DataTrans
I/O, DMA Analog output system for point plotting.	DT3371	DataTrans
I/O, Dual-port analog output system, DMA, 12-bit resolution.	DT3366	DataTrans
I/O, Dual-ported high-level DMA Analog input system, 12-bit resolution.	DT3362	DataTrans
I/O, High level analog to digital, 16 single-ended or 8 differential inputs.	DT2762	DataTrans
I/O, High-level A/D, DMA, 12-bit resolution, up to 64 single-ended or 32 differential inputs.	DT3382	DataTrans
I/O, High-level analog to digital with 16 single-ended or 8 differential channels, 12-bit A/D converter.	DT1761	DataTrans
I/O, IEEE-488 Interface, talker, listener, controller capabilities.	DT2791	DataTrans
I/O, Isolated analog input system., 12-bit integrating A/D converter.	DT1768	DataTrans
I/O, Isolated analog system with four differential channels, 12-bit integrating A/D, 12-bit D/A converters with point plotting.	DT1769	DataTrans
I/O, Isolated low-level analog to digital, 4 differential channels.	DT2765	DataTrans
I/O, Isolated parallel digital, 16 outputs, 200 V isolation.	DT2768-1	DataTrans
I/O, Low level analog input/output with 16 single-ended or 8 differential input channels, point plotting.	DT1765	DataTrans
I/O, Low level analog, 16 single-ended or 8 differential, 12-bit A/D, two-channel 12-bit D/A converters.	DT2785	DataTrans
I/O, Low-level analog input system.	DT1764	DataTrans
I/O, Low-level analog to digital, 16 single-ended or 8 differential inputs.	DT2764	DataTrans
I/O, Parallel digital, 16 data inputs 16 latched outputs.	DT2768	DataTrans
Isolated analog input expansion.	DT2775	DataTrans
Memory, Dual port RAM and controller, 32 Kbytes standard, 128 Kbytes optional.	DT3369	DataTrans

† Military Temperature Range (−55° to 125°C)

* Typical Value

Bold face indicates additional data is provided on the page noted.

MICROCOMPUTER-SUPPORT BOARDS (Cont'd)

Supported System Function	Part Number	Source	Line
Q-bus		**(Cont'd)**	
Memory, 128 Kbyte to 2 Mbyte DRAM single- and double-bit error detection; single-bit correction.	CI-1173-EDC	Chrislin	
Memory, 128 Kbyte, 4 Mbyte DRAM, block-mode DMA, parity, CSR.	CI-1173	Chrislin	
Memory, 256 Kbyte-1 Mbyte DRAM on-board parity generator/checker and control status register.	CI-1123¢	Chrislin	
Memory, 4 Mbyte DRAM, parity, runs under PMI on the Microvax II.	CI-MIV4	Chrislin	
Memory, 8 Mbyte, DRAM, parity, runs under PMI on the Microvax II.	CI-MIV8	Chrislin	5
Multiplexer channel expansion, specify (32 single-ended or 16 differential) or (64 single-ended or 32 differential) channels.	DT2772	DataTrans	
RM-65			
Memory, Battery backup 12K CMOS RAM each of the 3-4K sections are individually addressable throughout the full address space.	GE65-12K	Golden	
S-100			
Calendar/clock/alarm board. Has long-term timing and interrupt signals for Z80, 8080, and other processors. Tone generator develops four-octave notes, long-term battery backup, auxiliary latching output.	CCA-100	IndComp	
Calendar/clock/timer board, allows time, date, day of week, to be provided to CRT display, or used for logging. Provides 1/100th second timing increments, long-term battery backup.	CCT-100	IndComp	
Color digitizer, images with up to 754 x 484 point resolution can be digitized and stored in memory or on disk.	SDD	Cromemco	10
Controller, Floppy disk controller, controls both 5-1/4 and 8-inch floppy disk drives.	LDP72	Lomas	
Controller, for both hard disk and cartridge tape.	HD/CTC	Teletek	
Controller, Graphics, IBM-PC color graphics board compatible. Allows IBM-PC programs to run on S-100 bus computers.	LDPCOLOR 1	Lomas	
Controller, 4 Kbyte ROM with read/write format capability for any combination of single or double-sided, single or double-density 5-1/4 inch or 8-inch floppy disk drives.	64FDC	Cromemco	
Converter, Analog-to-digital, supports 64 A/D inputs with 8-bit resolution.	A/D64-100	IndComp	15
Converter, Analog-to-digital, 12-bit resolution, sixteen channels with 30 μs conversion time.	ADC12	Cromemco	
Converter, Analog-to-digital, 12-bit resolution, two parallel ports with output strobe line.	DAC12	Cromemco	
Converter, Digital-to-analog, provides 64 D/A outputs with zero to 5 VDC range eight-bit converter resolution.	D/A64-100	IndComp	
Converter, seven channels of 8-bit A/D, seven channels of D/A, 8-bit parallel I/O port, 5.5 μs conversion time.	D¢7A	Cromemco	
I/O, Color graphics interface, three analog outputs for RGB monitor, 754 x 482 pixel maximum resolution, any 16 colors (of 4096) or 16 shades of gray may be displayed.	SDI	Cromemco	20
I/O, Eight serial ports for multiuser environment.	OCTAPORT	Lomas	
I/O, Eight-port multi-channel parallel interface, 8-bit ports can be used singly or coupled together to form longer word lengths.	8PIO	Cromemco	
I/O, Four-port isolated parallel interface, provides electrical isolation from host computer.	4PIO	Cromemco	
I/O, GPIB interface IEEE-488 port, Z80A processor.	GPIB	Cromemco	
I/O, Hard disk controller. Simultaneously controls 4 hard disks and does ECC and CRC generation on data fields.	HDC-1001	AdvDigital	25
I/O, Network interface (C-NET) interfaces the data channel which interconnects network stations to a 4-MHz Z-80A with program storage.	CNI	Cromemco	
I/O, OCTART, 8-channel asynchronous serial interface with 280A MPU (16 Kbytes ROM, 64 Kbytes RAM, parity modes; odd, even, none or force, interrupts for character handling, four 16-bit counter-timers.	OCTRT	Cromemco	
I/O Printer interface, for dot-matrix or letter-quality printers, interrupt capability.	PRI	Cromemco	
I/O, Serial/parallel interface, three parallel I/O ports and two serial ports.	CSP	Cromemco	
I/O, Terminal interface, alphanumeric and graphic, 80 characters x 25 lines, 512 displayable ASCII characters within 8 x 9 dot matrix.	CTI	Cromemco	30
I/O, Twin UART digital interface, two serial I/O ports, two 8-bit parallel I/O ports and ten independently programmable interval timers. Software selectable baud rates up to 76,800 baud.	TRT	Cromemco	
I/O, Winchester hard disk interface, hard disk data transfer, memory-to-memory data transfer, extended addressing.	WDI-II	Cromemco	
Memory, Controller unit. Performs error detection and correction, memory refresh control and memory cycle timing.	MCU	Cromemco	
Memory, Dynamic RAM, 256 Kbyte. Supports 8- and 16-bit data paths.	LDP256K	Lomas	
Memory, Dynamic RAM, 256 Kbyte to 2 Mbytes.	MEGARAM	Lomas	35
Memory, Static RAM, 128 Kbyte, 130-ns board access time, for high performance 16-bit systems.	RAM67	Lomas	
Memory, 16 Kbyte RAM expandable to 0.5 Mbyte with bank select. Operates at 2 or 4 MHz with no wait states.	16KZ	Cromemco	
Memory, 32 Kbyte PROM capacity, bank select and DMA in-out, up to sixteen 2716 PROMs.	32KBS	Cromemco	
Memory, 64 Kbyte RAM organized as two 32K blocks; extended bank select permits memory space expansion to 512 Kbytes in eight banks.	64KZ-11	Cromemco	
Memory, 256 Kbyte RAM read/write, CROMIX-type bank switching and 24-bit extended addressing.	256KZ	Cromemco	40
Memory, 512 Kbytes DRAM storage unit, 24 bit extended addressing, controlled by MCU.	512MSU	Cromemco	
System support board, two serial ports, two parallel ports, real-time clock, battery protected clock calendar.	HAZITALL	Lomas	
SCSI			
Controller, Disk module, provides format, read/write control, disk drive and system buffering, error-correction code generating when controlled by external microprocessor.	ADP-40	NCR	
Controller, Intelligent disk drive for up to four ST506 Winchester 5-1/4 inch drives or four flexible drives, 56-bit error-correction code, 1.5-Mb/s transfer rate to host.	ADP-41	NCR	
Controller, Intelligent tape, controls up to four streaming tape drives with Pertec interface, 64 Kbyte buffer memory with parity, 9-bit data paths, copy function, up to 1.25 Mb/s tape data transfer rate.	ADP-52	NCR	45
Controller, SCSI intelligent disk controller supports a variety of SMD-0 disk drives, up to 1 Mb/s transfer rate, 10-MHz disk transfer rate, selectable-read recovery algorithm.	ADP-44	NCR	
Controller, Tape, uses QIC-36 interface to control one 1/4-inch data cartridge tape drive, automatic error recovery, 64K FIFO buffer with parity.	ADP-54	NCR	
I/O, Flexible, multi-master I/O expansion using SCSI bus provides full SCSI (ANSC X3T9.2) and SASI compatible bus, 17 bi-directional I/O lines, 8-bit input port.	1AX	Ampro	

† Military Temperature Range (−55° to 125°C)

* Typical Value

Bold face indicates additional data is provided on the page noted.

MICROCOMPUTER-SUPPORT BOARDS (Cont'd)

Supported System Function	Part Number	Source	Line
STDbus			
Analog input expander for additional 48 single-ended or 24 differential channels.	DT2734	DataTrans	
Bell 103 and 202 Compatible Modem.	SB8630	MicroSys	
Bus extender card, labeled test points.	ST4411	Burr-Brown	
Calendar clock, battery back-up.	MCM-CLK	WinSystems	
Calendar clock using the MM58167A, provides 24 hour clock with BCD format, on-board lithium battery for power-down operation.	MCM-CLK	WinSystems	5
Coaxial Cable Modem with UART, Data Rates to 10.2K Baud.	SB8601	MicroSys	
Controller, Alphanumeric CRT, 80x24 standard, other formats user selectable.	ST4504	Burr-Brown	
Controller, Color terminal controller, on-board Z80 with software, up to 16 colors, NTSC, PAL or RGB video, 40x24 text or 256x192 graphics.	10303	Enterprise	
Controller, disk controller for three 5 1/4 inch or 3 1/2 inch floppy disk drives with 8085, 8088, 80188, and Z80 compatibility, SCSI (SASI) compatible host adapter, on-board DMA, and off-board DMA compatibility.	ZT8850	Ziatech	
Controller, Disk drive subsystem with 3.5 inch microfloppy drive and Western Digital controller.	ipc-DISK-1	Vesta	10
Controller, disk supports up to four IBM 3740 system 34 format floppy drives, 5-1/4 or 8 inch, single- or double-sided or double density.	ST4315	Burr-Brown	
Controller, DMA (Z80).	05360	STDMicro	
Controller, Dual 3.5 inch disk drives on one card.	ipc-DISK-2	Vesta	
Controller, Floppy disk controller for 2S2D floppy disks.	SB8510	MicroSys	
Controller, Floppy disk controller with DMA and 64Kbytes DRAM.	DSTD-711	DY-4	15
Controller, Floppy disk with DMA (Z80).	05364	STDMicro	
Controller, GPIB Controller—controller/talker/listener; for use in GPIB controllers (master): includes driver software and cable.	ZT 7488/28	Ziatech	
Controller, Graphic CRT, 640x480x1 pixel resolution.	ST4505	Burr-Brown	
Controller, High resolution graphics controller, NEC-7220 based configured with 128 Kbytes video refresh memory, eight colour foreground/background.	DSTD-777	DY-4	
Controller, IEEE 488 controller, driver software available on diskette.	ZT8847	Ziatech	20
Controller, Low cost floppy disk controller.	SB8500	MicroSys	
Controller, Microfloppy disk drive controller card.	ipc-DISK-0	Vesta	
Controller, Monochromatic and colour CRT controller with memory-mapped video RAM.	DSTD-776	DY-4	
Controller, Multifunction IEEE 488 controller, includes one serial port (RS-232C); two 8-bit parallel ports, five 8-bit counter/timers and an interrupt controller; driver software available on diskette.	ZT8848	Ziatech	
Controller, Servo valve controller: mostly CMOS; on-board 8-bit DAC and servo amplifier; full STDBus compatibility +5V @ 65mA, +/- 12V @ 25mA.	STD-SVC1	Intelicom	25
Controller, Synchronous data link control (SDLC), DMA compatible.	SB8451	MicroSys	
Controller, Universal floppy disk controller with 16/20-bit DMA. 3 1/2', 5 1/4', 8' Floppies	SB8520	MicroSys	
Controller, Video display card. Offers color or monochrome alphanumeri or graphics video with "snow-free" access, display. To 96 lines, to 128 columns, resolution 640 x 240.	10301	Enterprise	
Controller, Video display generator, 64 character x 28 lines with programmable character size.	VID-64	VersaLogic	
Controller, Video display generator, 80 character x 28 lines with programmable character size.	VID-80	VersaLogic	30
Controller, Video display generator, 80 x 24 with programmable character sizes.	2220	VersaLogic	

Supported System Function	Part Number	Source	Line
Controller, Dual multiprotocol communications controller for non-Z80 processors.	SB8422	MicroSys	
Controller, Dual multiprotocol communications controller for Z80.	SB8412	MicroSys	
Controller, Four channel DMA Controller, 16-bit memory address.	SB8341	MicroSys	
Controller, Four channel DMA Controller, 20-bit memory address.	SB8345	MicroSys	35
Controller, Five channel system timing and counting.	SB8355	MicroSys	
Controller, 16 Channel Z80 Mode 2 interrupt controller, 16 Channel Counter Timer, or Combination.	SB8303	MicroSys	
Controller, 16 Channel 8085, 8088 priority interrupt Controller.	SB8301	MicroSys	
Controller, 24x80 Alphanumeric CRT controller.	SB8320	MicroSys	
Controllers, 6502 Single card computer controller with mixed RAM, ROM Sockets, 1 serial port, 2 parallel ports and 4 timers. Power fail, interrupt, and memory protection circuitry allow CMOS RAM to be battery backed.	10812	Enterprise	40
Controllers, 6809 Single card computer controller with mixed RAM, ROM Sockets, 1 serial port, 2 parallel ports and 4 timers. Power fail, interrupt, and memory protection circuitry allow CMOS RAM to be battery backed.	10809	Enterprise	
Converter, Analog to digital, 12-bit.	MCM-A/D12	WinSystems	
Converter, Analog-to-digital, 16 channels, 12-bit resolution, 4-MHz.	ST4303-16	Burr-Brown	
Converter, Analog-to-digital, 24 channels, 12-bit resolution, 4-MHz.	ST4303-24	Burr-Brown	
Converter, Analog-to-digital, 32 channels, 12-bit resolution, 4-MHz.	ST4303-32	Burr-Brown	45
Converter, Analog-to-digital, 8 channels, 12-bit resolution, 4-MHz.	ST4303-8	Burr-Brown	
Converter, DC-DC converter board	DT2715	DataTrans	
Converter, Digital to analog, 8-bit.	MCM-D/A8	WinSystems	
Converter, Digital-to-analog, 8 latched 8-bit channels.	ST4305	Burr-Brown	
Converter, four-channel, 8-bit digital to analog.	DT2727	DataTrans	50
Converter, four-channel, 12-bit digital to analog.	DT2726	DataTrans	
Converter, Triple 8-channel 8-bit analog to digital (Z80).	05340	STDMicro	
Converter, 8 Channel, 12 Bit 0-20ma D/A Plug-in.	SB8278	MicroSys	
Converter, 16 Channel, 12 Bit A/D Plug-in.	SB8277	MicroSys	
Converters, A/D Converter; CMOS 16-channel 12-bit A/D Converter card; 16 single-ended or 8 differential inputs; Input voltage -10V to +10V in four ranges; programmable amplifier.	ADC12	Intelicom	55
Data acquisition subsystem, sensor-based 16-channel single-ended and 16-channel differential inputs, 12-bit resolution.	RTI-1270	AD	
Extender card. DIP switch isolation on signal lines; ground plane shielding.	STD-SX3-A	Intelicom	
I/O, Analog I/O board, 12 bits (Z80).	MK78172-42 MK78172-56 MK78175-40	Mostek Mostek Mostek	60
I/O, Analog input board	DT2712	DataTrans	
I/O, Analog input, eight channel.	2370	VersaLogic	
I/O, Analog input, 16 single-ended, 8 differential, 12-bit A/D, CMOS STDbus.	RTI-1280	AD	
I/O, Analog input, 8 channels with 12 bit resolution and current loop inputs.	AIN-1B	VersaLogic	
I/O, Analog input, 8 channels with 12 bit resolution and noise tolerant conversion.	AIN-1A	VersaLogic	65
I/O, Analog output, four channel, 0-10V.	2390	VersaLogic	
I/O, Analog output, 4 channels, 12-bit resolution, CMOS STDbus.	RTI-1282	AD	
I/O, Analog output, 4 channels with 10 bit resolution. 0-10 volt output range.	AOUT-1	VersaLogic	

† Military Temperature Range (−55° to 125°C)

* Typical Value

Bold face indicates additional data is provided on the page noted.

MICROCOMPUTER–SUPPORT BOARDS (Cont'd)

Supported System Function	Part Number	Source	Line
STDbus		**(Cont'd)**	
I/O, Analog subsystem combination, 16 single-ended, 8 differential analog inputs, two analog outputs, 10-bit resolution.	RTI-1225	AD	
I/O, Analog subsystem combination, 16 single-ended, 8 differential analog inputs, 2 analog outputs, 12-bit A/D, CMOS STDbus.	RTI-1281	AD	
I/O, Analog subsystem, four analog output channels, 12-bit resolution, memory mapped or port I/O selectable.	RTI-1262	AD	
I/O, Analog subsystem, 16 single-ended, 8 differential analog inputs, 10-bit resolution.	RTI	AD	
I/O, Analog subsystem 32 single-ended, 16 differential analog inputs, 12-bit resolution, memory mapped or port I/O selectable.	RTI-1260	AD	5
I/O, Analog to digital input (Z80).	MK78177-26	Mostek	
I/O, Calendar clock with battery backup using the MM58167A for the Z80C, NSC800, 80C85, and 80C88 processors. Includes a watchdog timer.	LPM-CLK-2	WinSystems	
I/O, Camera interface card; mostly CMOS interface for Reticon LC600 line scan camera; Z80 compatibility: Q5V @ 250 mA.	STD-CAM1	Intelicom	
I/O, Centronics w/Serial SBC (8088).	05822	STDMicro	
I/O, Digital I/O, 24 signal channels, three 8-bit read/write ports for 24 bidirect lines, CMOS STDbus.	RTI-1287	AD	10
I/O, Digital-Input/Output Board.	MK77672	Mostek	
I/O, Digital-Input/Output Panel.	MK77673	Mostek	
I/O, Disk interface, floppy interface board with CP/M disk operating system software package.	2010	VersaLogic	
I/O, DMA with/RS-232/449 Serial SBC (8088).	05826	STDMicro	
I/O, Dual channel STD-Z80 multiprotocol synchronous or asynchronous serial I/O with RS-232 or 20mA opto-isolated current loop. Modem control signals, supports Z80 vectored interrupts.	MCM-S102	WinSystems	15
I/O, Dual PIO (Z80).	05380	STDMicro	
I/O, Dual RS232 (DART) Serial Interface (Z80).	05370	STDMicro	
I/O, Dual RS-232-449 Serial SBC (8088).	05824	STDMicro	
I/O, Dual RS-422 serial interface with DMA.	DSTD-401	DY-4	
I/O, eight independent D/A converters with separate configurable output channels.	LPM-D/A8	WinSystems	20
I/O, FFT with/RS-232/449 Serial SBC (8088).	05825	STDMicro	
I/O, Floppy-disk controller.	MK77677	Mostek	
I/O, Floppy-disk interface (Z80).	MK78146	Mostek	
I/O, Four channel communications module with 4 RS-232C channels, asynchronous or synchronous.	DSTD-403	DY-4	
I/O, Four channel serial I/O card using 8251. Supports cascadable interrupts with an 8259 PIC RS-232 or TTL output levels	MCM-5104	WinSystems	25
I/O, four channel serial I/O using 82C51. RS-232 or TTL output cascadable interrupts supported with 82C59 PIC	LPM-SI04	WinSystems	
I/O, General purpose TTL interface, three 8-bit read/write ports control 24 bi-directional signal lines. Direct connection to industrial I/O optical isolator modules.	807	Octagon	
I/O, General purpose TTL interface, twelve 8-bit read/write ports control 96 I/O channels.	832	Octagon	
I/O, GPIB Interface—talker/listener; for use in GPIB devices (slave); includes driver software and cable.	ZT 7488/08	Ziatech	
I/O, GPIB Listener/talker/controller w/DMA (Z80).	05388	STDMicro	30
I/O GPIB w/Serial SBC (8088).	05828	STDMicro	
I/O, Hard disk interface.	MCM-HDI	WinSystems	
I/O, High performance dual serial interface with 16/20-bit DMA.	SB8416	MicroSys	
I/O, High speed parallel interface with SASI interface optional DMA, general purpose parallel interface.	DSTD-402	DY-4	
I/O, High-level analog input, 16 single-ended or 8 differential channels, 12-bit resolution.	DT2722 DT2742	DataTrans DataTrans	35
I/O, I/O Rack module interface (Z80).	05382	STDMicro	
I/O, IEEE-488 Interface, GPIB, programmable as talker, controller or listener, DMA.	ST4311	Burr-Brown	
I/O, Industrial I/O, Opto-22 type interface.	2340	VersaLogic	
I/O, Intelligent parallel, 1 Kbyte RAM 2 Kbyte EPROM, on-board Z80 processor with 8-bit TTL output, one 8-bit input port and counter/timer.	ST4394	Burr-Brown	40
I/O Intelligent 488 with Z80 on-board, Talker/listener/controller.	TBD	Mostek	
I/O, Interface card to the OPTO-22 PB-8, PB-16, and PB-24 racks.	MCM-7507	WinSystems	
I/O, Interface to OPTO-22, PB-8, PB-16 and PB-24 racks.	LPM-PI03	WinSystems	
I/O, Isolated input and relay output, 4 channels of each.	IPI-4	VersaLogic	
I/O, Isolated input and solid state relay output, 4 channels of each.	IPI-5	VersaLogic	45
I/O, Isolated input, 8 channels, up to 250 volts ac or dc with status indicators.	IPI-1	VersaLogic	
I/O, Isolated low-level analog inputs with four differential-input channels.	DT2725 DT2745	DataTrans DataTrans	
I/O, Isolated RS-422 Serial I/O.	MK77671	Mostek	
I/O, Low-level analog input, 16 single-ended or 8 differential channels, 12-bit resolution.	DT2724 DT2744	DataTrans DataTrans	50
I/O, Multichannel serial board—four independent INS 8250 UARTs; programmable baud rates to 56K; wait state generator; on-board 8259 interrupt controller; loopback diagnostic capability.	ZT 8840	Ziatech	
I/O, Multi-channel communications controller (Z80).	MK78192	Mostek	
I/O, Non-isolated RS-422 Serial I/O.	MK77676	Mostek	
I/O, Omninet transporter card providing 1 Mbyte/s RS-422 networking.	DSTD-406	DY-4	55
I/O, One asynchronous RS-232 serial port, one eight-bit TTL input and one eight-bit TTL output port; two combination 8-bit TTL I/O ports.	MCM-SP10	WinSystems	
I/O, one asynchronous RS-232 serial port, two 8-bit parallel-input, and two 8-bit parallel output ports.	LPM-SPIOA	WinSystems	
I/O, OPTO 22/Gordos compatible I/O card with 48 lines terminated bidirectional TTL, four event sense software controllable interrupts; 8 or 16-bit I/O decoding	ZT8845	Ziatech	
I/O, Parallel, four 8-bit input and four 8-bit output ports.	MCM-PI02	WinSystems	
I/O, Parallel I/O with four buffered programmable 8-bit ports with handshake. Supports Z80 mode 2 interrupts.	LPM-PIO	WinSystems	60
I/O, Parallel interface for the Opto-22 PB-8, PB-16, and PB-24 type modular racks.	MIO-24	VersaLogic	
I/O, Parallel, with 64 I/O lines total, 4MHz operation.	MCM-PI01	WinSystems	
I/O, Parallel, 24 bidirectional lines.	MCM-7507	WinSystems	
I/O, Parallel, 48 bits, user-configurable.	ST4304	Burr-Brown	
I/O, Parellel I/O, CMOS industrial interface card; 24 bi-directional lines; drives industry standard I/O Module Racks; Precision interval clock.	CMOS-PIO	Intelicom	65
I/O, PIO with Serial SBC (8088).	05823	STDMicro	
I/O, Printed circuit board for prototyping I/O circuitry	STI-DIO	Solarcom	
I/O, Printed circuit board for prototyping I/O circuitry. High Speed CMOS logic.	STI-DIO-C	Solarcom	
I/O, QIC-2 streaming tape interface module.	DSTD-408	DY-4	
I/O, Quad serial I/O card with four RS-232C serial channels.	DSTD-202	DY-4	70
I/O, Relay output card—eight relays SPST (optional mercury wetted SPST or SPDT), LED display of relay status; CPU readable relay status.	ZT 7502/10/40/or 60	Ziatech	

† Military Temperature Range (−55° to 125°C)

* Typical Value

Bold face indicates additional data is provided on the page noted.

MICROCOMPUTER–SUPPORT BOARDS (Cont'd)

STDbus (Cont'd)

Supported System Function	Part Number	Source	Line
I/O, Relay output, 8 Form C Relay outputs, switching range from 10 uA to 1A, .3A at 115 VAC, 1A at 30 VDC.	MS2300	Eltec	
I/O, Relay output, 8 channels N.O. or N.C. up to 1.25 A, CPU readback with status indicators.	IPI-2	VersaLogic	
I/O, RS-232/449. Serial w/Centronics (Z80).	05374	STDMicro	
I/O, SCSI Host adaptor w/DMA (Z80).	05386	STDMicro	
I/O, serial I/O, fully CMOS Dual UART card; two full duplex RS-232-C channels provided (DTE or DCE); programmable 50-9600 baud rate; supports mode 2 interrupts.	CMOS-SIO	Intelicom	5
I/O, Serial I/O, two-channel RS-232.	2321	VersaLogic	
I/O, Serial interface, two channels, one each RS-232 and RS-422.	SIO-2B	VersaLogic	
I/O, Serial interface, two RS-232 channels up to 19.2K baud.	SIO-2A	VersaLogic	
I/O, Serial, two channel RS232C or four 20mA, software selectable baud rate.	ST4302	Burr-Brown	
I/O, Serial, two full-duplex programmable serial I/O channels.	MCM-SI02	WinSystems	10
I/O, Serial, two serial UART channels opto-isolated current loop, jumper selectable baud rate generator for 110 to 9600 baud.	MCM-DSI/O	WinSystems	
I/O, Serial-parallel, one serial UART channel, opto-isolated current loop, jumper-selectable baud rate generator for 50 to 19200 baud.	MCM-SPI/O	WinSystems	
I/O, Signal conditioning interface, eight channels can accept inputs from a variety of sensor devices. Companion ASP for the ST4603.	ST4703	Burr-Brown	
I/O, Solid state relay output, 8 channels, up to 250 Vac at 1 A. CPU readback and status indicators.	IPI-3	VersaLogic	
I/O, STD-Z80 compatible I/O with four programmable 8-bit TTL I/O ports with handshake.	MCM-P10	WinSystems	15
I/O, STD-Z80-BUS to SASI interface.	MK77678	Mostek	
I/O, STD-Z80-BUS to SASI interface with DMA.	MK77679	Mostek	
I/O, Triple RS232/449 (DART) serial interface (Z80).	05373	STDMicro	
I/O, Two asynchronous RS-232 or opto-isolated 20mA current loop serial channels with modem control.	MCM-DS10	WinSystems	
I/O, two asynchronous RS-232 serial or opto-isolated 20mA current loop ports, selectable baud rate 110-9600.	LPM-DSIO	WinSystems	20
I/O, Two RS-232C serial channels, two parallel ports.	DSTD-201	DY-4	
I/O, Universal TTL I/O board, provides 8 ports (64 lines) of TTL I/O with readback. May be populated for input or output with readback on a port basis.	10611	Enterprise	
I/O, Winchester disk Controller Interface (SASI/SCSI).	SB8740	MicroSys	
I/O, Winchester hard disk interface to the WD1002 controller boards, includes a calendar clock using the MM58167A with battery backup.	MCM-HDI	WinSystems	
I/O, Quad channel RS422 serial interface for Z80.	SB8414	MicroSys	25
I/O, Two Channel RS232C/20mA serial interface with 256 byte bootstrap PROM socket.	SB8420	MicroSys	
I/O, Six port multi-mode parallel Interface.	SB8466	MicroSys	
I/O, 2-channel programmable Serial I/O.	MK77670	Mostek	
I/O, 4-channel 12-bit D/A.	MK77665	Mostek	
I/O, 4-channel 8-bit D/A.	MK77666	Mostek	30
I/O, 8-bit D/A converter with 8 independent input channels. Each channel has separate configurable output ranges.	MCM-D/A	WinSystems	
I/O, 120-bit successive approximation A/D converter with 16 single-ended or 8 differential inputs. On-board programmable gain instrumentation amplifier for 5 input ranges.	MCM-A/D12	WinSystems	
I/O, 12-bit successive approximation A/D converter with 16 single-ended or 8 differential inputs.	LPM-A/D12	WinSystems	
I/O, 16 optically isolated input channels, 3.5 kV isolation.	ST4306	Burr-Brown	
I/O, 16-channel high-level 12-bit A/D.	MK77655	Mostek	35
I/O, 16-channel i-bit A/D.	MK77674	Mostek	
I/O, 32 Line digital, Plug-in.	SB8276	MicroSys	
I/O, 32-bit programmable parallel I/O.	MK77650	Mostek	
I/O, 64 parallel I/O lines; four 8-bit input, four 8-bit output ports.	LPM-PI02A	WinSystems	
I/O, 64 parallel I/O lines; two 8-bit input, two 8-bit output, and four 8-bit combination ports.	LPM-PI01A	WinSystems	40
I/O, 64 parallel I/O lines organized as four 8-bit input ports and four 8-bit output ports; direct TTL interface levels.	MCM-P102	WinSystems	
I/O, 64 parallel I/O lines organized as two 8-bit input, two 8-bit output, and four 8-bit combination I/O ports, direct TTL interface levels.	MCM-P101	WinSystems	
Isolated analog input expander for 8 additional differential-input channels.	DT2735	DataTrans	
Math, Floating point arithmetic unit for simple and derived functions, 16- or 32-bit integer and 32-bit floating point modes.	ST4402	Burr-Brown	
Math, High-speed floating point math.	MK77852	Mostek	45
Memory, Accepts up to 64 K of RAM or ROM, maps anywhere in 1 Mb of memory space.	ipc-MEM	Vesta	
Memory, Battery RAM Card (2Kx8).	MK77762	Mostek	
Memory, Battery RAM Card (4Kx8).	MK77760	Mostek	
Memory, Bytewide memory module with 12 bytewide sockets.	DSTD-503	DY-4	
Memory, Byte-wide memory board—unpopulated-socketed for byte-wide RAMs, PROMs, EPROMs, EEPROMs; addressable to 1Mbyte on STD Bus; works with 5 or 8 MHz 8088, battery backup.	ZT 8820	Ziatech	50
Memory, CMOS 54 Kbyte EPROM card using 27C32 only; Z80, 8085, 6800 compatibility; bank select to 512 Kbyte; 450-ns access time.	CMOS-64K	Intelicom	
Memory, CMOS-STD BUS universal memory card with eight 28-pin JEDEC memory sockets for RAM, ROM, or EPROM's. Supports page mode or 1 Mbyte extended address decoding.	LPM-UMC	WinSystems	
Memory, EPROM and UART.	MK77753	Mostek	
Memory, EPROM Programmer, programs all 5-Vdc EPROMs.	ST4421	Burr-Brown	
Memory, fully CMOS 32 Kbyte Static RAM/ROM card: Z80, 8085, 6800 compatibility; bank select to 512 Kbyte; 250-ns access time.	CMOS-32K	Intelicom	55
Memory, High-speed Read/Write memory board with 128K, 256K, 512K, 768K, or 1Mbyte configrations, no wait states at 8 MHz, parity error detection and on-board hidden refresh.	ZT8824	Ziatech	
Memory, Magnetic bubble subsystem stores 128 K of data.	ipc-BUB-1	Vesta	
Memory, Non-volatile memory card with four 28-pin sockets for ROM EPROM or RAM.	DSTD-502	DY-4	
Memory, Program development card, combines up to 32 K battery-backed RAM, an EPROM programmer, power fail circuit and a parallel printer port.	870	Octagon	
Memory, PROM programming system for single supply EPROMS.	PS8200	MicroSys	60
Memory, STDBus Universal Memory card with eight 28-pin JEDEC sockets for RAM, ROM, or EPROM. 4MHz, supports both bank-switch or extended-address decoding.	MCM-UMC	WinSystems	
Memory, STD-Z80, 4-MHz 128K dynamic RAM card.	MCM-DRAM 128	WinSystems	
Memory, STD-Z80, 4-MHz 64K dynamic RAM card.	MCM-DRAM 64	WinSystems	

† Military Temperature Range (−55° to 125°C)

* Typical Value

Bold face indicates additional data is provided on the page noted.

MICROCOMPUTER–SUPPORT BOARDS (Cont'd)

Supported System Function	Part Number	Source	Line
STDbus		**(Cont'd)**	
Memory, STD-80188/8088/8085 compatibility; no wait states at 5 MHz; hidden memory refresh and parity with a non-maskable interrupt; supports MEMEX* bank-switching. Memory capacity also includes 512 Kbytes and 1 Mbyte.	ZY8823	Ziatech	
Memory, STD-80188/8088/8085 compatibility; no wait states at 8 MHz; hidden memory refresh and parity with a non-maskable interrupt; supports MEMEX* bank-switching.	ZT8822	Ziatech	
Memory, Universal memory accepts 2Kx8, 4Kx8, or 8Kx8 static RAM's or EPROM's.	MCM-UMC	WinSystems	
Memory, Universal Memory Card.	MK77763	Mostek	
Memory, Universal memory card with eight 28 pin JEDEC sockets, accepts RAM, ROM, EPROM, EEPROM, and Zero Power RAM. Z80 and 8088 compatible. Supports up to 512K bytes.	MEM-MAX	VersaLogic	5
Memory, Universal memory module.	SB8120	MicroSys	
Memory, Universal non-volatile memory card mixes up to 64 Kbytes of CMOS RAM, EPROM and EEPROM. Two groups of 4 sockets each may be separately addressed allowing RAM and EPROM to be in different areas of the memory map.	10764	Enterprise	
Memory, 16 Kbyte DRAM, on-board auto-refresh.	ST4203-16	Burr-Brown	
Memory, 16 Kbyte RAM or 32 Kbyte EPROM capacity, supplied with eight 2716-type EPOM devices.	ST4202-0	Burr-Brown	
Memory, 16 Kbyte RAM or 32 Kbyte EPROM capacity, supplied with 2016-type RAM devices.	ST4202-2	Burr-Brown	10
Memory, 16 Kbyte RAM or 32 Kbyte EPROM capacity, supplied without memory.	ST4202-1	Burr-Brown	
Memory, 16 Kbyte RAM universal memory module.	SB8120-16	MicroSys	
Memory, 16 Kbyte SRAM capacity, switch selectable to any 16 Kbyte boundary, supplied without RAM.	ST4201-3	Burr-Brown	
Memory, 16 Kbyte static RAM, switch selectable to any 16 Kbyte boundary, 4-MHz.	ST4201-1	Burr-Brown	
Memory, 16 Kbyte static RAM, switch selectable to any 16 Kbyte boundary, 6-MHz.	ST4201-2	Burr-Brown	15
Memory, 16K Dynamic RAM.	MK77754-0	Mostek	
Memory, 16-Kbyte RAM (Z80).	MK78109	Mostek	
Memory, 24K byte RAM, ROM, PROM board.	2160	VersaLogic	
Memory, 32 Kbyte DRAM, on-board auto-refresh.	ST4203-32	Burr-Brown	
Memory, 32K Dynamic RAM.	MK77761-0	Mostek	20
Memory, 48 Kbyte DRAM, on-board auto-refresh.	ST4203-48	Burr-Brown	
Memory, 64 Kbyte DRAM, on-board auto-refresh.	ST4203-65	Burr-Brown	
Memory, 64 Kbyte dynamic module with byte parity.	DSTD-328	DY-4	
Memory, 64 Kbyte dynamic RAM module.	SB8130-64	MicroSys	
Memory, 64K DRAM with bankswitch capability.	MK77764	Mostek	25
Memory, 64-Kbyte RAM with two PIO channels (Z80).	MK78110	Mostek	
Memory, 128 Kbyte dynamic RAM module.	SB8130-128	MicroSys	
Memory, 128/256Kbyte Dynamic RAM board—5 and 8 MHz compatibility, no wait states; on-board memory refresh; parity with a nonmaskable interrupt.	ZT 8821	Ziatech	
Memory, 128K DRAM with bankswitch capability.	MK77765	Mostek	
Memory, 256K Dynamic RAM module (8088).	05809	STDMicro	30
Memory, 256Kbyte dynamic RAM module with byte parity.	DSTD-325	DY-4	
Miscellaneous, Clock/Calendar w/Serial SBC (8088).	05827	STDMicro	
Miscellaneous, Clock/calendar with APU (Z80).	05350	STDMicro	
Miscellaneous, Interrupt expander module.	MK77967	Mostek	
Miscellaneous, Parallel video display (Z80).	MK78199	Mostek	35
Miscellaneous, Serial video display (Z80).	MK78198	Mostek	
Multifunction, accessory board; designed for real-time applications; includes AC/DC power-fail protection, real-time clock/calendar, timer, reset, indicator lights and switches.	ZT8882	Ziatech	
Multifunction, EPROM and UART with 10K ROM-based firmware module.	MK77950	Mostek	
Multifunction, System controller/diagnostics card.	MK77963-0	Mostek	
Multifunction Z80 CPU and arithmetic processor card with 9511A math processor, one serial channel, 4 channel counter/timer.	DSTD-109	DY-4	40
Multi-function, calendar-clock module with battery backup, brown-out detector, four 28-pin memory sockets, parallel port.	DSTD-703	DY-4	
Prototyping board.	STI-STD-CK	Solarcom	
Quad CTC (Z80).	05352	STDMicro	
Standard bus extender card.	STI-STD	Solarcom	
Wire-Wrap card; power and ground busing to every IC, bypass capacitors across each IC, accommodates from 14 to 40 pin ICs.	STD-WW3-A	Intelicom	45
Z80/NSC800 Adapter Module: allows Z80 In-circuit Emulator (ICE) to operate Intelicom's CMOS-CPU processor card.	CMOS-Z80/800	Intelicom	
8085/NSC800 Adapter module; allows 8085 In-circuit Emulators (ICE) to operate an NSC800 processor card.	CMOS-85/800	Intelicom	
TI Professional			
Memory, 192 Kbyte RAM expansion.	FG-115	Microlog	
Memory, 192K Expansion memory.	FG-115	Microlog	
TM990			
Controller, Floppy disk drive.	TM990/303B	TI	50
Controller, IEEE-488.	TM990/314	TI	
I/O, Analog output, 4 channel, 12-bit D/A resolution.	RT-1242	AD	
I/O, Analog output, 8 channel, 12-bit D/A resolution.	RTI-1243	AD	
I/O, Analog, 32 single-ended, 16 differential inputs, 12-bit resolution.	RTI-1240	AD	
I/O, Combination Analog, 32 single ended, 16 differential inputs, two-channel output, 12 bit D/A resolution.	RTI-1241	AD	55
I/O, High power ac and dc interface.	TM990/309	TI	
I/O IEEE (iSBX) interface.	TM990/959	TI	
I/O, Low-level analog input, supports thermocouple, RTD, strain gauge and pressure transducer interface.	TM990/315	TI	
I/O, 48 TTL compatible, input/output lines with three programmable timers, six interrupts.	TM990/310	TI	
I/O, 48 TTL lines, 24 mA sink current, on-board voltage regulator.	TM990/311	TI	60
Memory, Bubble memory card, 128 Kbyte 4 FBM43DA devices, compatible with the TM990 board.	MBC404M3T	FujitsuA	
Memory, EPROM programmer.	TM990/304	TI	
Memory, RAM/EPROM/CMOSRAM, sockets for up to 128 Kbyte EPROM, up to 32 Kbyte static RAM and CMOS RAM, battery back-up.	TM990/202	TI	
Memory, RAM/EPROM, up to 8 Kbytes EPROM, up to 32 Kbytes static RAM.	TM990/201	TI	
Memory, 16 Kbyte RAM, battery back-up.	TM990/204	TI	65
Memory, 256 Kbyte DRAM maximum with error detection, up to 16 Kbytes EPROM.	TM990/203A	TI	
Miscellaneous, Communication expansion, provides four RS232/RS422.	TM990/307	TI	
Miscellaneous, Pulse timer/event counter.	TM990/317	TI	
Miscellaneous, X.25/HDLC Communication, permits implementation of distributed industrial processing network.	TM990/308	TI	
UNIBUS			
I/O, Analog input system capable up to 64 single-ended or 32 differential inputs.	DT1712	DataTrans	70
I/O, Analog output systems with up to 8 D/A converter outputs and up to 8 digital outputs, 12-bit resolution.	DT1716	DataTrans	

† Military Temperature Range (−55° to 125°C)

* Typical Value

Bold face indicates additional data is provided on the page noted.

MICROCOMPUTER–SUPPORT BOARDS (Cont'd)

Supported System Function	Part Number	Source	Line
UNIBUS		**(Cont'd)**	
I/O, Analog, 4 differential input channels, 100 kHz throughput, 16 bit resolution, 4 channels of D/A output, on board pacer clock.	DT1777	DataTrans	
I/O, Analog, 4 single-ended channels, 100-kHz throughput, 12-bit resolution, 4 channels of D/A, 125 kHz throughput, on-board pacer clock.	DT1778	DataTrans	
I/O, Analog, 8 differential input channels, programmable gain, 12-bit resolution., 4 channels of D/A, on board pacer clock, 125 kHz throughput.	DT1771	DataTrans	
I/O, High level analog with 16 single-ended or 8 differential input channels, 12 bit D/A converter, two channel 12 bit D/A converters, up to 64 single-ended or 32 differential inputs.	DT1711	DataTrans	
I/O, Isolated analog with 4 differential inputs, 12-bit A/D, 12-bit D/A converters with point plotting.	DT1719	DataTrans	5
I/O, Low-level analog I/O system, up to 64 single-ended or 32 differential inputs.	DT1715	DataTrans	
VAX			
Memory, 1 Mbyte DRAM, ECC, runs with VAX 725, 730, and 750.	CI-V53	Chrislin	
VERSAbus			
Controller, Floppy disk controller. Controls two daisy-chained 1 Mbyte EXORdisk III disk systems (four drives).	**M68KVM20**	**Motorola (2115)**	
Controller, SASI/SCSI, Peripheral Controller (DMA).	CC-1	CharlesRiver	
Controller, Universal disk controller for up to two SMD interface-compatible hard-disk drives and up to 4 floppy disk drives.	**M68KVM21**	**Motorola (2115)**	10
Controller, Universal intelligent peripheral controller. MC68120 MPU provides serial board rates from 300 to 9600 baud, DMA, Four-port, 32-byte FIFO buffer.	**M68KVM60**	**Motorola (2116)**	
I/O, 4 serial ports, 1 parallel port.	TP-304	CharlesRiver	
I/O, 8 serial ports, with modem control signals and 24 bit parallel port.	TP-308	CharlesRiver	
I/O, 802.2/802.3 LAN interface.	NC-1	CharlesRiver	
Memory, 1 Mb, memory board with ECC error correction.	DM-1024	CharlesRiver	15
Memory, 1 Mbyte dynamic RAM, byte-parity checking, 8-16 bit addressing, separate addressable blocks of 32 Kbytes.	**M68KVM12**	**Motorola (2115)**	
Memory, 1 Mbyte RAM board; 8, 16 and 32-bit transfer supported.	CM-1024	CharlesRiver	
Memory, 2 Mb, Byte parity memory board.	CM-2MB	CharlesRiver	
Memory, 2 Mbyte RAM board; 8, 16 and 32-bit transfer supported.	CM-2048	CharlesRiver	
Memory, 4 Mb, Byte parity memory board.	CM-4MB	CharlesRiver	20
Memory, 4 Mbyte RAM board; 8, 16 and 32-bit transfer supported.	CM-4096	CharlesRiver	
Memory, 256 Kbyte dynamic RAM with ECC, byte-parity checking, 8/16 bit addressing, separate addressable blocks of 32 Kbytes.	**M68KVM11-1**	**Motorola (2115)**	
Memory, 512 Kbyte dynamic RAM with ECC, byte-parity checking, 8-16 bit addressing, separate addressable blocks of 32 Kbytes.	**M68KVM11-2**	**Motorola (2115)**	
Memory 512 Kbyte RAM board; 8, 16 and 32-bit transfer supported.	CM-512	CharlesRiver	
Memory, 1 Mbyte DRAM, 8/16 or 32-bit data, 24/32-bit address, byte parity, optional 512Kbyte or 256Kbyte.	PSM-1VP	Plessey	25
Memory, 1 Mbyte DRAM, 8/16 or 32-bit data, 24/32-bit address, EDC correcting, optional 512 Kbye or 256 Kbyte.	PSM-1VA	Plessey	
Memory, 4 Mbyte DRAM, 8/16 or 32-bit data, 24/32-bit address.	PSM-4VA	Plessey	
Memory, 4 Mbyte DRAM, 8/16 or 32-bit data, 24/32-bit address, byte parity, optional 2 Mbyte or 1 Mbyte.	PSM-4VP	Plessey	
Miscellaneous, Multi-channel communications module. Four asynchronous RS232C serial ports, 50 to 9600 bps baud rate, one parallel printer port and on-board intelligent peripheral controller.	**M68KVM30**	**Motorola (2116)**	
Multifunction, Memory, I/O, Time-of-day clock. Eight sockets for ROM/PROM/EPROM, six 8-bit parallel ports, three timer/counters, two serial I/O ports and battery-backed time-of-day clock.	**M68KVM80-1**	**Motorola (2116)**	30
Multifunction, Memory, I/O, Time-of-day clock. 128 Kbytes DRAM, eight sockets for ROM/PROM/EPROM, six 8-bit parallel ports, three timer/counters, two serial I/O ports, and battery backed time-of-day clock.	**M68KVM80-4**	**Motorola (2116)**	
VMEbus			
Controller, Advanced system control unit.	ASCU-1	Force	
Controller, Color graphics controller with 1024 x 1024 pixel resolution within 16 colors. Firmware control of industry standard graphics functions, including windowing, blanking, zoom, pseudo colors, inverse video and plot functions.	PME-GDC-1	Plessey	
Controller, Colour and monochromatic graphics display module using NEC-7220 GDC. 256K DRAM, colour look up tables, 16 colours from a palette of 4096.	DVME-778	DY-4	
Controller, combined Winchester/floppy disk controller.	PME WFC-1	PlesseyMicro	35
Controller, CRT color controller with keyboard and printer ports.	IV-1653-01	Ironics	
Controller, Direct ST506/SA460 5 1/4' Winchester floppy controller.	WFC-1	Force	
Controller, Dual Axis Servo Controller allows pulse width modulation control of two dc motors.	IV-1666	Ironics	
Controller, Ethernet Node processor/LAN controller. Interface for 10-Mbps Ethernet implementation.	IV-1620 **MVME330**	Ironics **Motorola (2110)**	40
Controller, Floppy disk controller. Word DMA or programmed byte data transfer over VMEbus.	MK75803	Mostek	
Controller, Floppy disk, programmable to control up to four single- or double-sided 5-1/4 or 8-inch disk drives of single or double capacity.	MK7803	Mostek	
Controller, Floppy disk/UIPC interface controls up to four 8-inch or 5-1/4-inch floppy disk drives, supports 4-channel DMAC and provides RS-232C serial function.	**MVME315**	**Motorola (2110)**	
Controller, GPIB controller with DMA.	**MVME300**	**Motorola (2110)**	
Controller, Graphics display processor board with 7220, 256 Kbyte display RAM, up to 40 MHz pixel rate.	IV-1651-01	Ironics	45
Controller, Hard disk controller interface. DMA can transfer up to 64 Kbyte data blocks.	MK75802	Mostek	
Controller, High speed single channel DMA controller; burst and block modes, interrupt on transfer complete or bus error, FIFO buffered 16 and 32 bit transfers.	IV-1672	Ironics	
Controller, IEEE-488 Interface Controller, with 8292-8291A talker/listener, two 8293 transceivers, slave interrupter (1-7), jumper selectable, communication; via 32 consecutive addresses.	IV-1622-01	Ironics	
Controller, Intelligent peripheral controller.	**MVME310**	**Motorola (2110)**	
Controller, Intelligent SMD winchester disk controller with 68000 CPU, faceplate LED reset. Supports two SMD compatible drives, provides error detection and correction.	DVME-715	DY-4	50
Controller, Intelligent 9-track tape controller with 68010 or 6800 CPU.	SVME-716	DY-4	
Controller, Nine track 1/2-inch tape controller, handles Pertec type interface. PE and GCR.	VME-TC50	IntSolutions	
Controller, QIC 2 tape controller.	VME-QIC2	IntSolutions	
Controller, SCSI peripheral controller with on-board 68000 and RAM.	VCC-1	CharlesRiver	

† Military Temperature Range (−55° to 125°C)

* Typical Value

Bold face indicates additional data is provided on the page noted.

MICROCOMPUTER-SUPPORT BOARDS (Cont'd)

Supported System Function	Part Number	Source	Line
VMEbus		**(Cont'd)**	
Controller, SMD Disk Controller/Formatter, supports up to two SMD disk drives, programmable 8, 16 or 32 bit wide data transfers.	IV-3275	Ironics	
Controller, System controller for use with MC68010-based MPU to provide system-level functions, on-board system clock and serial bus clock.	**MVME025**	**Motorola (2108)**	
Controller, System controller module: parallel and round robin arbiters, system clock generator, system reset generator power fail monitor, centronics parallel printer port, SCSI bus interface with DMA data transfer, two full duplex ASYNC serial ports using 68681.	IV-1673	Ironics	
Controller, Winchester/Floppy disk. Controls up to two 5-1/4-inch Winchester disk drives and up to four floppy disk drives, on-board DMA.	**MVME320**	**Motorola (2110)**	
Controller, 802.3/802.3 LAN controller.	VNC-1	CharlesRiver	5
Controller, 1024 x 1024 16-color graphics controller.	PME GDC-1	PlesseyMicro	
Converter, 14-16 bid A/D conversion module	GMSV04	GenMicro	
Digital Signal Processor, TMS320 based, 200-ns instruction cycle, 4K x 16 PROM, 4K x 16 RAM, dual 4K x 16 data buffers, dual-port access, vectored interrupt capability.	SPV100	Burr-Brown	
I/O, AC input, monitors status of up to eight 120/240 Vac sources, opto-isolated.	**MVME610**	**Motorola (2112)**	
I/O, AC output (zero crossover). Enables switching eight 120/240 Vac outputs, opto-isolated.	**MVME615**	**Motorola (2112)**	10
I/O, AC output (zero crossover). Enables switching eight 120/240 Vac outputs, phase angle control, opto-isolated.	**MVME616**	**Motorola (2112)**	
I/O, Analog input board, 16-channel 12-bit ADC.	IV-1641-01	Ironics	
I/O, Analog input/digital signal processor, 4 channels of analog input with simultaneous sampling, selectable input ranges, 12-bit resolution, optical isolation, TMS320 DSP with 200-ns instruction cycle, dual-port 8Kx16 data memory, 4kx16 program memory.	MPV960	Burr-Brown	
I/O, analog input, 8 single-ended input channels and 8 additional input channels, single-ended or differential, 12-bit resolution, 3 μs maximum throughput, selectable input ranges	MPV950D	Burr-Brown	
I/O, Analog input, 16 differential 32 single-ended, 12-bit resolution, resistor programmable gain.	MPV901	Burr-Brown	15
I/O, analog input, 16 single-ended input channels, 12 bit resolution, 3 us maximum throughput, selectable input ranges	MPV950S	Burr-Brown	
I/O, Analog output, 8 channels, 12-bit resolution, current source outputs with selectable range for each individual channel	MPV905	Burr-Brown	
I/O, Analog output, 16 channels, 12-bit resolution, unipolar or bipolar output	MPV904	Burr-Brown	
I/O, Analog subsystem, four analog-output channels.	RTI-602	AD	
I/O, Analog subsystem, 32 single-ended, 16 differential analog-input channels, 12-bit resolution.	RTI-600	AD	20
I/O, Analog, 16 differential 32 single-ended inputs, 2-channel analog output, 12-bit resolution, resistor programmable gain.	MPV901A	Burr-Brown	
I/O, Analog, 16 differential 32 single-ended inputs, 2-channel analog output, 12-bit resolution, software programmable gain.	MPV901P	Burr-Brown	
I/O, DC input module, eight input channels for 10 to 60 Vdc signal monitoring, 2500 V isolation.	**MVME620**	**Motorola (2112)**	
I/O, DC output module, eight 10 to 60 Vdc output pairs, 2500 V isolation.	**MVME625**	**Motorola (2112)**	
I/O, Dual 16-bit parallel I/O. Four independent 8-bit ports with two handshake lines per port, centronics type parallel interface outputs for two printers.	**MVME410**	**Motorola (2112)**	25
I/O, Eight port intelligent I/O board: Eight Full Duplex Multiprotocol Serial I/O Ports, on-board 68000 processor, on-board 4Kx32 bit dual-port RAM, on-board 128 Kbyte private dynamic RAM VMEbus interrupter, VMEbus master and slave interface, functions as a CPU board in multiprocessor systems.	IV-1624	Ironics	
I/O, Eight serial ports, DMA, parallel printer port, RTC option.	VM-ICP8	IntSolutions	
I/O, Eight-bit plane combiner and camera input interface: Eight bit flash converter for real-time data capture at sample rates up to 20M samples per sec., 256x8 translation table maps digital samples.	IV-1652	Ironics	
I/O, Four serial I/O channels, asynchronous operation to 19.2 kilobaud, synchronous operation to 307.2 kilobaud.	DSIO	Mostek	
I/O, Four serial I/O channels, two fixed RS232 and two selectable RS232 or RS422.	MK75801	Mostek	30
I/O, Four serial parts and 60 parallel lines. 2' x 8-inch socket area for memory and real-time clock. Optional on-board lithium battery back-up.	VME-9100D	LogicalDes	
I/O, Four-port serial I/O board; four full duplex multiprotocol serial I/O ports, VMEbus interrupter, complete VMEbus slave interface (A16, D8) with interrupter.	IV-1625	Ironics	
I/O, General-purpose I/O module, eight serial channels, twenty-four parallel lines	GMSV01	GenMicro	
I/O, IEEE-488 GPIB Interface with DMA Controller; 500 Kbytes/s data transfer speeds and talker/listener capability.	IV-1621	Ironics	
I/O, Includes IEEE-488,programmable user/interprocessor interrupts.	ASCU-2	Force	35
I/O, Intelligent multifunction I/O controller, 8 serial ports, 2 printer ports, one 16-bit parallel port.	VME-IMIO	IntSolutions	
I/O, Intelligent SASI Adapter with DMA.	PME SASI-1	PlesseyMicro	
I/O, Intelligent serial I/O Board, 8 SIO, with 68000.	IV-1624-SI01	Ironics	
I/O, Interface/controller for up to three Winchester drives (ST506 interface) and up to four IBM 3740 format single or double sided floppy drives with Shugart compatible interface.	PME-WFC-1	Plessey	
I/O, Interface for SASI controller to handle Winchester disk, floppy disk and tape drives, with 4-channel programmable DMA controller and local RS232C SIO channel for diagnostic access.	PME-SASI-1	Plessey	40
I/O, Magnetic tape interface adapter-buffer 1/2-inch 9-track, 4K bit FIFO buffer.	**MVME435**	**Motorola (2112)**	
I/O, Miscellaneous, Dual channel RS232C communications module. Two I/O channel compatible, full duplex serial I/O ports, enables synchronous/asynchronous baud rates of 50 to 19.2 kb/s as a terminal or modem.	**MVME400**	**Motorola (2112)**	
I/O, MK68000 CPU (8-MHz), one RS232 serial I/O channel.	MK75601	Mostek	
I/O, SASI bus peripheral interface adapter. Single host non-arbitrating SA400 disk controller interface for I/O channel.	**MVME420**	**Motorola (2112)**	
I/O, SCSI Host adapter.	VME-SCSI	IntSolutions	45
I/O, Sixteen serial ports, DMA, parallel printer port, RTC option.	VME-ICP16	IntSolutions	
I/O, System I/O, 144 buffered digital I/O lines	GMSV04	GenMicro	
I/O, TV Camera Input interface board, flash ADC sends video camera data via J2/P2.	IV-1652-01	Ironics	
I/O, up to eight hard disk controllers, SASI interface, byte or word DMA data transfer.	VME-NOCI	Mostek	
I/O, Up to isolated input.	PIO-1	Force	50
I/O, Up to 250Kb, synchrons.	SIO-1	Force	
I/O, VME SASI compatible interface, DMA can transfer up to 64 Kbyte data blocks, enables up to eight SASI disk controllers (hard or floppy) to interface to VMEbus.	MK75802	Mostek	

† Military Temperature Range (−55° to 125°C)

* Typical Value

Bold face indicates additional data is provided on the page noted.

MICROCOMPUTER-SUPPORT BOARDS (Cont'd)

Supported System Function	Part Number	Source	Line
VMEbus		**(Cont'd)**	
I/O, VMEbus to I/O channel interface.	**MVME316**	**Motorola (2111)**	
I/O, 6-channel Multi-protocol serial interface.	PME SID-1	PlesseyMicro	
I/O, 6-port asynchronous/synchronous serial I/O.	**MVME331**	**Motorola (2111)**	
I/O, 8 serial and dual parallel I/O card, synchronous and asynchronous RS-232C and RS-422.	DVME-201	DY-4	
I/O, 16 channel I/O channel interface. Up to 16 ac or dc solid-state relay or output signals.	M68RIO1-1	Motorola	5
I/O, 32 single ended, 16 differential Analog input, 2 Analog output lines 12-bit resolution.	ADDA-1	Force	
I/O, 68450 DMAC, 68153 Bus interrupt modules for flexible interrupt handling DPTO insolation on input and output.	OPIO-1	Force	
I/O, 6-channel SIO board with freely selectable RS232C or RS422 interface. Programmable asynchronous or synchronous operation using IBM bisync BSC, DDCMP, X3, 28, X21, SDLC, HDLC, X25 or other protocols. Software programmable rate form 110 to 38400 baud.	PME-SIO-1	Plessey	
Math, Fast Floating Point Processor with 4.5 μs speed for 32 bit floating point add, subtract, multiply.	IV-1674	Ironics	
Memory, Bytewide memory board with 32 28-pin sockets.	DVME-503	DY-4	10
Memory, CMOS RAM/ROM provides sixteen 28-pin sockets for combinations of user-supplied RAM, ROM and CMOS RAM. 1 Mbyte maximum capacity.	**MVME211**	**Motorola (2110)**	
Memory, Combination SRAM/ROM/EPROM memory board with 16 x 28 pin sockets to support 24 or 28 pin JEDEC-compatible devices for a maximum capacity of 512 Kbyte EPROM or ROM or 128 Kbyte SRAM.	PME-CRR-1	Plessey	
Memory, Control-status register, parity separate 256 banks.	DRAM-1	Force	
Memory, Dynamic RAM module, 256 Kbytes.	**MVME201**	**Motorola (2110)**	
Memory, Dynamic RAM module, 512 Kbytes.	**MVME202**	**Motorola (2110)**	15
Memory, Expansion module, 512 K or 2 MB dual-ported RAM augments V68F single board computer.	VMXF	Pacific	
Memory, Fast SRAM, separate 256 K banks, on-board battery back-up.	SRAM-2	Force	
Memory, Fast SRAM, separate 64 K banks. Active battery back-up on board.	SRAM-1	Force	
Memory management adapter board. Two to four 68451's accelerated with look-ahead circuitry, no additional wait states within a 256K segment.	IV-1600-MMx	Ironics	
Memory management CPU. MK68000 processor and MK68451 memory management unit.	MK75602	Mostek	20
Memory, Parity. 65 ns write access, expandable to 13 MB.	DRAM-E3	Force	
Memory, Programmable parity response	DRAM-2	Force	
Memory, RAM (dual ported) 512 Kbyte, 1 Mbyte, 2 Mbyte versions.	VME-HSMEM	IntSolutions	
Memory, RAM 512 Kbyte, 1 Mbyte 2 Mbyte versions.	VME-MEMI	IntSolutions	
Memory, static RAM/ROM, 16 unpopulated sockets for 28-pin and 24-pin memory devices, memory size up to 128 Kbytes per module.	MVME210	Motorola	25
Memory, Universal Board. Twenty-four universal 28-pin memory sockets for EPROM, EEPROM, ROM/RAM. Two independent memory banks, 8, 16, 32 bit data transfers, 16 Kbyte to 256 Kbyte memory chips.	IV-1612-01	Ironics	
Memory, Dual port mass memory board providing 512 Kbyte or 2 Mbytes dynamic memory.	DVME-351	DY-4	
Memory, 1 Mb Byte parity memory board.	VCM-1024	CharlesRiver	
Memory, 1 Mbyte dynamic RAM with parity, 4 way word/2 way longword interleaving. With odd-even board pairs interleaving, the effective cycle time is reduced below 333 ns.	IV-1611-1MB	Ironics	
Memory, 1 Mbyte RAM board set (2 VME boards) byte parity, 8, 16 and 32-bit transfer supported.	VEM-1024	CharlesRiver	30
Memory, 1 Mbyte x 32-bit error correcting DRAM.	PME 1EA	PlesseyMicro	
Memory, 2 Mbyte dynamic RAM with parity.	SVME-328	DY-4	
Memory, 2 Mbyte dynamic RAM with parity, 4 way word/2 way longword interleaving. With odd-even board pairs interleaving, the effective cycle time is reduced below 333 ns.	IV-1611-2MB	Ironics	
Memory, 2 Mbyte Expansion module for PME1EA.	PME DB2EA	PlesseyMicro	
Memory, 2 Mbyte Expansion module for PME2EP.	PME DB2EP	PlesseyMicro	35
Memory, 2 Mbyte RAM board set (2 VME boards) byte parity, 8, 16 and 32-bit transfer supported.	VEM-2048	CharlesRiver	
Memory, 2 Mbyte x 16-bit parity DRAM.	PME 048D	PlesseyMicro	
Memory, 2 Mbyte x 32-bit parity DRAM.	PME 2EP	PlesseyMicro	
Memory, 4 Mbyte RAM board set (2 VME boards) byte parity, 8, 16 and 32-byte transfer supported.	VEM-4096	CharlesRiver	
Memory, 16-socket SRAM/EPROM board for up to 128 Kbyte SRAM.	PME CRR-1	PlesseyMicro	40
Memory, 128 Kbyte dynamic RAM, byte-parity checking, 8/16-bit addressing, separate addressable blocks of 32 Kbytes, less than 400 ns access time.	**M68KVM10-3**	**Motorola (2115)**	
Memory, 128 Kbyte fast SRAM with battery.	PME 1285	PlesseyMicro	
Memory, 256 Kbyte dynamic RAM card, automatic refresh.	MK75701	Mostek	
Memory, 256 Kbyte dynamic RAM with parity, 4 way word/2 way longword interleaving. With odd-even board pairs interleaving, the effective cycle time is reduced below 333 ns.	IV-1611-256K	Ironics	
Memory, 256 Kbyte x 32-bit error correcting DRAM.	PME 256EA	PlesseyMicro	45
Memory, 512 Kbyte dynamic RAM with parity, 4 way word/2 way longword interleaving. With odd-even board pairs interleaving, the effective cycle time is reduced below 333 ns.	IV-1611-512K	Ironics	
Memory, 512 Kbyte Expansion module for PME 256EA.	PME DB512EA	PlesseyMicro	
Memory, 512 Kbyte expansion module for PME512EP.	PME DB512EP	PlesseyMicro	
Memory, 512 Kbyte RAM board set (2 VME boards) byte parity, 8, 16 and 32-bit transfer supported.	VEM-512	CharlesRiver	
Memory, 512 Kbyte x 16-bit parity DRAM.	PME 012D	PlesseyMicro	50
Memory, 512 Kbyte x 32-bit parity DRAM.	PME 512EP	PlesseyMicro	
Memory, 1 Mbyte DRAM memory board with EDC, 8/16/32-bit data, 24-bit address, 150 ns write and 300 ns read access.	PME-1EA	Plessey	
Memory, 128 Kbyte SRAM memory board, 8/16-bit data, 24-bit address and 140 ns read/write access. On-board lithium battery back-up provides up to 1000 hours data retention.	PME-128S	Plessey	
Memory, 16 28-Pin JEDEC sockets, 8 individually addressable banks.	RR-1	Force	
Memory, 2 Mbyte DRAM daughter board for PME 1EA, with 150 ns write access and 300 ns read access. Mounts onto mother board within VMEbus card profile, increasing capacity of PME 1EA to 3 Mbyte.	PME-DB2EA	Plessey	55
Memory, 2 Mbyte DRAM memory board with byte parity, 8/16-bit data, 24 bit address, 190-ns write access and 300 ns read access.	PME-048D	Plessey	
Memory, 2 Mbyte high-performance DRAM daughter board for PME 2EP, with 150-ns write access and 270-ns read access. Mounts onto mother board within VMEbus card profile, increasing capacity of PME 2EP to 4 Mbyte.	PME-DB2EP	Plessey	
Memory, 2 Mbyte high-performance DRAM memory with byte parity, 8/16/32-bit data, 24-bit address, 150ns write access and 270ns read access.	PME-2EP	Plessey	
Memory, 256 Kbyte DRAM memory board with EDC, 8/16/32 bit data, 24 bit address, 150 ns write access and 300 ns read access.	PME-256EA	Plessey	
Memory, 512 KB Byte parity memory board.	VCM-512	CharlesRiver	60

† Military Temperature Range (−55° to 125°C)

* Typical Value

Bold face indicates additional data is provided on the page noted.

MICROCOMPUTER–SUPPORT BOARDS (Cont'd)

Supported System Function	Part Number	Source
VMEbus		**(Cont'd)**
Memory, 512 Kbyte DRAM daughter board for PME-256EA with 150 ns write access and 300 ns read access. Mounts onto mother board within VMEbus card profile, increasing capacity of PME-256EA to 768 Kbyte.	PME-DB512EA	Plessey
Memory, 512 Kbyte DRAM memory board with byte parity, 8/16-bit data, 24 bit address, 190-ns write access and 300-ns read access.	PME-012D	Plessey
Memory, 512 Kbyte high performance DRAM memory board with byte parity, 8/16/32 bit data, 24-bit address, 150-ns write access and 270-ns read access.	PME-512EP	Plessey
Memory, 512 Kbyte high-performance DRAM daughter board for PME 512EP, with 150-ns write access and 270-ns read access. Mounts onto mother board within VMEbus card profile, increasing capacity of PME 512EP to 1 Mbyte.	PME-DB512EP	Plessey
Multifunction, Intelligent communications module with 68000 CPU, six serial channels DMA.	DVME-702	DY-4
Prototyping board with interface logic, address decoding, logic select for blocks of 16/32 addresses, seven-level interrupter.	VME-5100D	LogicalDes
Special		
Converter, Analog-to-digital evaluation board, high speed, 6-bit, 100MSPS.	TDC1029E1C	TRW-LSI
Converter, Analog-to-digital evaluation board, high speed, 8-bit, 50 MSPS.	TDC1025E1C	TRW-LSI
Converter, Analog-to-digital evaluation board, 6-bit, 25MSPS.	TDC1014E1C	TRW-LSI
Converter, Analog-to-digital evaluation board, 7-bit, 20MSPS.	TDC1047E1C	TRW-LSI
Converter, Analog-to-digital evaluation board, 8-bit, 20MSPS.	TDC1007E1C TDC1048E1C	TRW-LSI TRW-LSI
Converter, Analog-to-digital evaluation board, 9-bit, 15MSPS.	TDC1019E1C	TRW-LSI
Memory, Bubble memory add-on card, 4 Mbit (512Kx8 or 1Mx8), IBM PC form factor, ROM device driver, software for use with MSDOS.	**PCB76**	**Intel (4073)**
Memory, Bubble memory card, 32 Kbyte, 1 FBM43DA device.	FBC401M3	FujitsuA
Memory, Bubble memory card, 64 Kbyte, 2 FBM43DA device.	FBC402M3	FujitsuA
Memory, Bubble memory card, 128 Kbyte, 1 FBM54DB device.	**FBC501M4**	**FujitsuA (2103,2104)**
Memory, Bubble memory card, 128 Kbyte, 4 FBM43DA devices. Also available with 8 to 64 devices for memory expansion from 256 Kbyte to 2 Mbyte.	**FBC404M3**	**FujitsuA (2102)**
Memory, Bubble memory card, 128 Kbyte, 8-bit parallel interface, 1 FBM54DB device.	**FBC501M4**	**FujitsuA (2103,2104)**
Memory, Bubble memory card, 256 Kbyte, 2 FBM54DB devices.	**FBC502M4**	**FujitsuA (2103)**
Memory, Bubble memory card, 256 Kbyte, 8-bit parallel interface, 2 FBM54DB devices.	**FBC502M4**	**FujitsuA (2103)**
Memory, Bubble memory card, 384 Kbyte 8-bit parallel interface, 3 FBM54DB devices.	**FBC503M4**	**FujitsuA (2103)**
Memory, Bubble memory card, 32 Kbyte, four 74 Kbit serial loop organized FBM31DB, Typical access time, 370 ms.	**FBC304M1A**	**FujitsuA (2106)**
Memory, Bubble memory card, 32 Kbyte, typical access time, 4.5 ms.	**FBC304D2A**	**FujitsuA (2106,2107)**
Memory, Bubble memory cassette production kit (128 Kbyte)	iBCK10	Intel
Memory, Bubble memory cassette protytping kit (128 Kbyte)	iBCK12	Intel
Memory, Bubble memory cassette system for FBM43CA cassette, 273,745 bits (total), 32 Kbyte user area.	FBM-4404P FBM-u404	FujitsuA FujitsuA
Memory, Bubble memory cassette system, 1 Mbyte.	FBM-C128GA	FujitsuA
Memory, Bubble memory cassette, 273,745 bits (1033 bits x 265 loops, major-minor loop (block replication transfer).	**FBM43CA**	**FujitsuA (4017)**
Memory, Bubble memory cassette, 74,032 bits (total), 65,536 bits (effective), serial loop.	**FBM31CA**	**FujitsuA (4016)**
Memory, Bubble memory control card for FBM31CA cassette.	FBC308C1A	FujitsuA
Memory, bubble memory control card for FBM43CA cassette, RS232C interface.	FBC404C3S	FujitsuA
Memory, Bubble memory control card for FBM43CA cassette, 8-bit parallel interface.	FBC404C3A	FujitsuA
Memory, Bubble memory expansion card for 8 FBM43DA devices, 256 Kbyte.	FBC408D3	FujitsuA
Memory, Bubble memory expansion card, 4 FBM43DA devices, 128 Kbyte.	MDC404D3	FujitsuA
Memory, Bubble memory expansion card, 512 Kbyte 4 FBM54DB devices.	FBC504D4	FujitsuA
Memory, Bubble memory interface adapter for 1 Mbyte bubble memory, GPIB interface.	FBM-A003	FujitsuA
Memory, Bubble memory interface adapter for 1 Mbyte bubble memory, RS232C interface.	FBM-A002	FujitsuA
Memory, Bubble memory kit, 1 Mbit (2048x512)	**BPK70AZ**	**Intel (4069)**
Memory, Bubble memory kit, 1 Mbit (4096x256x1)	**BPK72AZ**	**Intel (4070)**
Memory, Bubble memory kit, 4 Mbit (512Kx8)	**BPK74**	**Intel (4071)**
Memory, Bubble memory 4 Mbit (512Kx8 or 1Mx8) prototyping board with development software	**PCB75**	**Intel (4072)**
Multifunction, Remote sensing unit; 8 differential analog input channels; 4 voltage analog output channels, 8 digital input/output lines; fully CMOS design; programmable from any CPU via ASCII commands.	RSU	Intelicom

† Military Temperature Range (−55° to 125°C)

* Typical Value

Bold face indicates additional data is provided on the page noted.

Last Page This Section. Next Page 2101.

FAIRCHILD
A Schlumberger Company

SBC-50
SINGLE-BOARD COMPUTER

AUGUST 1985

DESCRIPTION

The SBC-50 is a single-board computer based on the Fairchild F9450 microprocessor. The new SBC-50 board, the first evaluation and prototyping tool for designers of F9450 based systems, contains RAM, EPROM expansion, and serial ports and direct links to the F9450's bus signals. SBC-50 users can write and run F9450 code in real time, gaining familiarity with the chip's hardware and its MIL-STD-1750A instruction set without having to design their own boards.

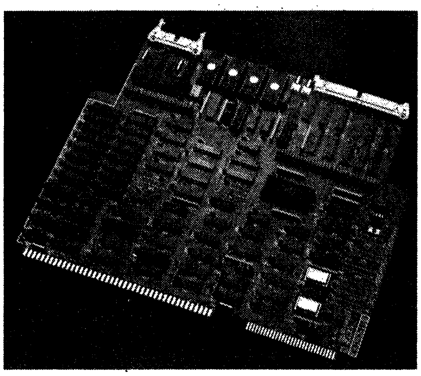

FEATURES

CPU: F9450 16-bit bipolar microprocessor.

MMU/BPU: Dedicated interface to a plug-in module containing the F9451 (MMU), the map RAMs, F9452 (BPU), and the protection RAM. This optional module expands the F9450 addressing capability with the F9451 Memory Mapper, and allows block protection down to 1K segments of memory.

RAM Memory: 64K x 16-bit of high-speed static dual-port RAM. (No wait States.)

EPROM Memory: 16K x 16 bits of EPROM. Expandable to 32K x 16 bits on board.

Serial I/O: Dual asynchronous communication ports, both RS-232C-compatible (data rate programmable up to 19.2K).

I/O Expansion: iSBX™ compatible input/output bus to expand the on-board I/O through multimodule boards that plug directly into the SBC-50.

System Bus: IEEE 796 (Multibus™) compatible.

Native Bus: High speed expansion bus that permits access to the F9450 microprocessor.

Manual Control: Two momentary-contact switches that provide manual control of the SBC-50 to provide RESET and POWER DOWN (PWRDN) INTERRUPT.

Status Display: Hex display to indicate the operating condition of the SBC-50.

Software Monitor: EPROM-resident SBC-50 MONITOR, provides user control and debug of the SBC-50 through serial port 1.

Diagnostics: SBC50TEST EPROM-resident self-test program to check the operating condition of the SBC-50.

Power Supplies:
- +5 Vdc ±5% @ 11.0 A, maximum
- +12 Vdc ± 5% @ 2 5mA, maximum
- −12 Vdc + 5% @ 25 mA, maximum

Operating Conditions:

Clock Frequency: DC to maximum clock speed over the specified temperature and supply range.

Temperature:	20°C to 55°C
Humidity:	0 to 90% non-condensing

PC Board Dimensions:

HEIGHT:	10.30 in. (26.15 cm)
WIDTH:	12.00 in. (30.48 cm)
DEPTH:	0.65 in. (1.27 cm)
WEIGHT:	1 lb., 4 oz.

Connectors:
- P1: 86-pin edge connector for IEEE 796 Bus signals (mating connector part # SAE FUPH7212-86MTNE).
- P2: 60-pin edge connector for extended Multibus signals (mating connector part # AMP PES-14559).
- J1: 60-pin header connector for MMU/BPU interface.
- J2: 44-pin header connector for the iSBX Bus.
- J3: 26-pin header connector for RS-232C signals for serial ports 1 and 2.
- J4: 60-pin header connector for the Native Bus signals.

™iSBX and Multibus are trademarks of Intel Corporation

Fairchild Semiconductor Corporation
Microcontroller Division
450 National Avenue, Mt. View, CA 94043
(415) 962-3888 TWX: 910-379-5091

© 1985 Fairchild Printed in U.S.A. August 1985 7.5M

Fairchild reserves the right to make changes in the circuitry or specifications at any time without notice.

Bubble Memory Card

FUJITSU

FBC504M4P Series -
+5V Single power source
FBC504M4L Series -
+5V, +12V, −12V

Product on this page supercedes product referenced in Index.

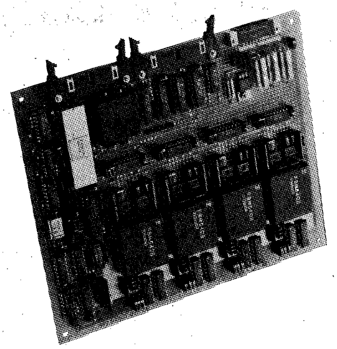

The FBC504M4P/L-series bubble memory cards, with built-in 1-megabit memory devices and control LSIs, provide easy-to-change non-volatile high density memory for a variety of applications. Memory capacities from 128 kilobytes to 4 megabytes can be selected, and cassette systems are also available. With Fujitsu bubble memory cards, file memories can be designed for improved system functions and reliability.

FEATURES

- **Maintenance-free**
  Maintenance is unnecessary because of no moving parts and no battery backup.
- **+5V single or triple power sources**
  Both the popular +5V single power source and the +5V, +12V, and -12V triple power source are available.
- **Wide variety of memory capacities**
  Basic memory capacities of 128KB, 256KB, and 512KB can be expanded by connecting 512KB expansion cards for a total memory capacity of up to 4MB.
- **1-megabit bubble cassette system**
  Data sharing and JOB modification can be easily performed by connecting the 1-megabit bubble cassette system.
- **Error correction function**
  In addition to the ECC error correction function, bus parity is provided for detecting errors due to noise on the bus.
- **A wide variety of commands**
  The card has a total of 24 commands, including R/W, SEEK (high-speed access), ABORT (access interrupt), and READ WRITE CHECK (self diagnosis).
- **Useful sub pages**
  Three sub pages can be added to the 128K-byte data area for storing system control data etc.
- **New defective loop information storage method**
  The boot loop method is used to store defective loop information, thereby minimizing initialization time.

SYSTEM CONFIGURATION (EXAMPLE)

- **4M-byte memory system composed of 7 memory cards and 4 holder units. (Triple power source)**

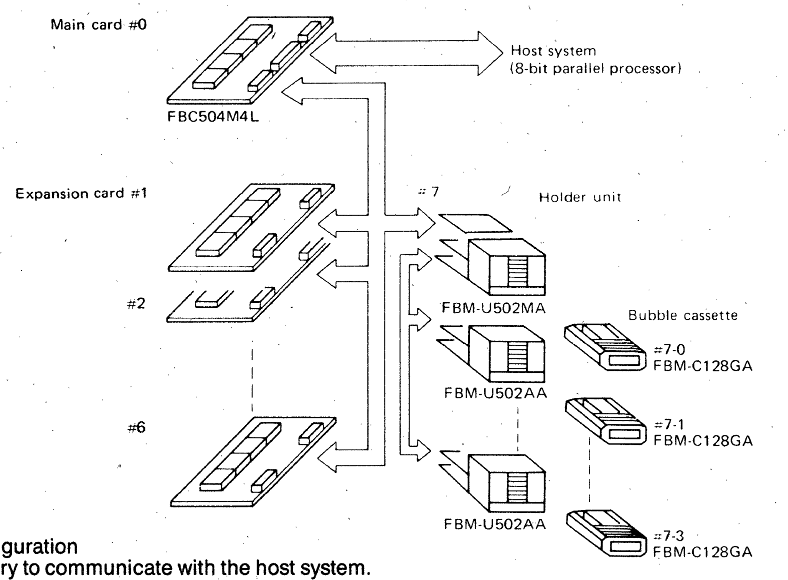

Note:
Restrictions on system configuration
- One main card is necessary to communicate with the host system.
- Expansion cards and holder units (FBM-U502MA) can be combined as desired, but only up to seven cards or units.
- Only up to three FBM-U502AA holder units can be connected to FBM-U502MA.

• Main card

This Main card has an 8-bit parallel interface for communication with the microprocessor, and includes a 1-megabit bubble memory device (FBM54DB) and control circuits. The memory capacity can be selected from 128K-bytes, 256K-bytes, or 512K-bytes.

Model	FBC501M4P/L	FBC502M4P/L	FBC504M4P/L
Chip used	FBM54DB		
Number of devices	1	2	4
Memory capacity	128K bytes	256K bytes	512K bytes
Interface	8-bit parallel (DMA available)		
Mean access time	12.5 ms (Seek time: 2.6 ms)		
Transfer method	64-byte block transfer		
Transfer rate	100K bits/s		
Temperature range Operation Non-volatile storage	 0°C to 50°C −40°C to 85°C		
Withstanding exterior magnetic field Operation Non-volatile storage	 20 Oe (max) 50 Oe (max)		

• Expansion card

The expansion card is used to expand the memory capacity greater than 512K bytes. Since the main card can be easily connected with flat cables, memory can be expanded even during operation. Expanded memory can be accessed using serial addresses (page addresses) from the main card.

Model	FBC504D4P/L
Chip used	FBM54DB
Number of chips	4
Memory capacity	512K bytes
Temperature range Operation Non-volatile storage	 0°C to 50°C −40°C to 85°C
Withstanding exterior magnetic field Operation Non-volatile storage	 20 Oe (max) 50 Oe (max)

• Holder unit and bubble cassette

The FBM-U502MA/MU holder unit can be directly connected to the main card. The FBM-U502AA is used for FBM-U502MA/MU when two or more holder units are used.

When memory cards and the cassette system are combined, not only data can be filed or shifted offline, but programs stored in memory cards can be modified with ease.

Model	FBM-U502MA/MU	FBM-U502AA
Cassette used	FBM-C128GA	
Memory capacity	128K bytes/cassette	
Temperature range Operation Non-volatile storage	 0°C to 50°C −40°C to 85°C	
Withstanding exterior magnetic field Operation Non-volatile storage	 20 Oe (max) 50 Oe (max)	

INTERFACE SIGNALS

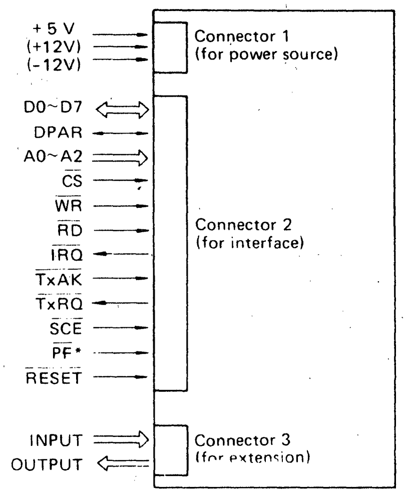
+5 V
(+12V)
(−12V)
Connector 1
(for power source)
D0~D7
DPAR
A0~A2
CS
WR
RD
IRQ
TxAK
TxRQ
SCE
PF*
RESET
Connector 2
(for interface)
INPUT
OUTPUT
Connector 3
(for extension)

* Required for triple power source

DATA FORMAT

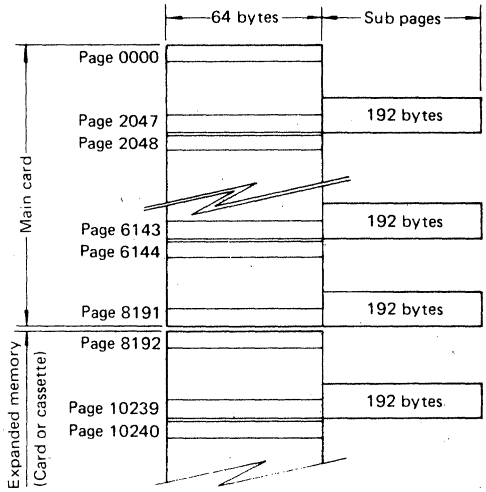
64 bytes
Sub pages
Page 0000
Page 2047
Page 2048
Page 6143
Page 6144
Page 8191
Page 8192
Page 10239
Page 10240
192 bytes
192 bytes
192 bytes
192 bytes
Main card
Expanded memory
(Card or cassette)

DIMENSIONS

Card

Unit: mm (inch)

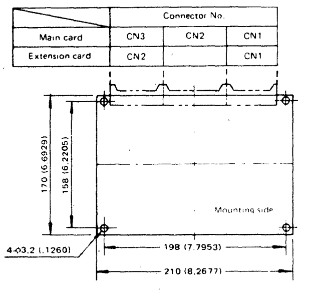
Mounting side
170 (6.6929)
158 (6.2205)
4-φ3.2 (.1260)
198 (7.7953)
210 (8.2677)

	Connector No.		
Main card	CN3	CN2	CN1
Extension card	CN2		CN1

Cassette

Unit: mm (inch)

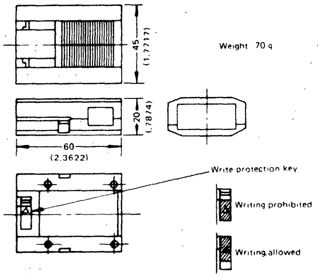
45
(1.7717)
Weight 70 g
20
(.7874)
60
(2.3622)
Write protection key
Writing prohibited
Writing allowed

Holder unit

Unit: mm (inch)

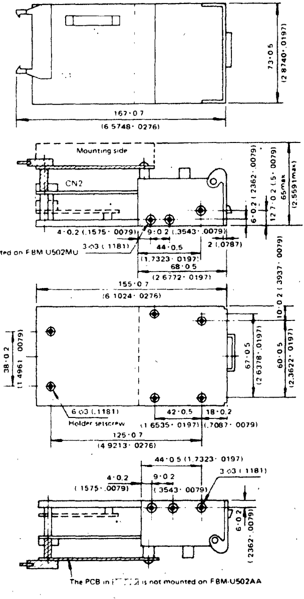
73·0.5
(2.8740·.0197)
167·0.7
(6.5748·.0276)
43·0.5
(1.6929·.0197)
Mounting side
CN2
6·0.2 (.2362·.0079)
12.7·0.2 (.5·.0079)
65max
(2.5591max)
4·0.2 (.1575·.0079)
9·0.2 (.3543·.0079)
3-φ3 (.1181)
2 (.0787)
* Mounted on FBM-U502MU
44·0.5
(1.7323·.0197)
68·0.5
(2.6772·.0197)
155·0.7
(6.1024·.0276)
10·0.2 (.3937·.0079)
38·0.2
(1.4961·.0079)
67·0.5
(2.6378·.0197)
60·0.5
(2.3622·.0197)
6-φ3 (.1181)
Holder setscrew
42·0.5
(1.6535·.0197)
18·0.2
(.7087·.0079)
125·0.7
(4.9213·.0276)
44·0.5 (1.7323·.0197)
4·0.2
(.1575·.0079)
9·0.2
(.3543·.0079)
3-φ3 (.1181)
6·0.2
(.2362·.0079)
The PCB in is not mounted on FBM-U502AA

1 Megabit Bubble Cassette System

FUJITSU

FBM-C128GA
FBM-C128GP } 1 Megabit bubble cassette
FBM-U502GA 8-bit parallel interface • triple power source • holder unit
FBM-U502GU 8-bit parallel interface • single power source • holder unit
FBM-U502AA Expansion holder unit

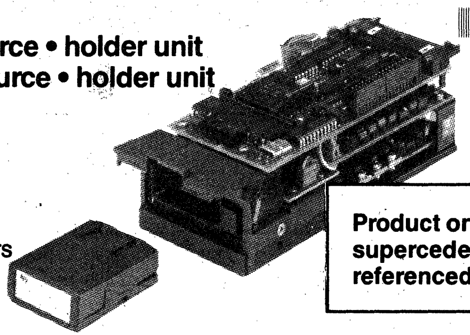

Product on this page supercedes product referenced in Index.

APPLICATIONS

- Program loader for terminal
- NC and robots
- Equipment for vehicles, vessels and aircraft
- Measuring instruments
- Personal computers and debugging too
- Equipment installed outdoors
- Portable equipment

The Fujitsu 1 Megabit Bubble Cassette System is an entirely new type of external memory system. The system is completely maintenance-free, and features high-speed average access time of 12.5 ms. The cassette itself is compact, lightweight, and easy to install and operate.

FEATURES

- **Maintenance-free**
  Maintenance is unnecessary because the system has no mechanical parts. The memory media is solidly housed, and never worn out.
- **Fast access**
  Average access time is 12.5 ms, and can be shortened to 2.6 ms by using the SEEK command.
- **Multi-purpose interface, DMA capability**
  The 8-bit parallel interface allows connection to any microprocessor.
- **Single or triple power sources**
  Both the popular +5V single power source and the convenient +5, +12, −12V triple power source are available.
- **Error correction function**
  In addition to the ECC error correction function, bus parity is provided for detecting errors due to bus noise.
- **Wide variety of command**
  The system provides a total of 24 commands, including READ/WRITE, SEEK (high-speed access), and ABORT (access interrupt).
- **Useful sub-pages**
  Three sub-pages can be added to the 128K byte data area for storing system control data etc.
- **Expandable memory capacity**
  The memory capacity can be expanded up to 512K bytes by adding expansion holder units.
  · FBM-U502GA + FBM-U502AA (maximum three units each)
  · FBM-U502GU + FBM-U502AA (maximum three units each)
- **Cassette eject function**
  Cassettes can be ejected by simply pressing the eject button on the holder unit.

SPECIFICATIONS

Holder unit	FBM-U502GA	FBM-U502GU	FBM-U502AA
Applicable cassette	FBM-C128GA/FBM-C128GP		
Memory capacity (user area) Data area Sub-pages	 128K bytes (64 bytes/page x 2048 pages) 192 bytes		
Mean access time	12.5 ms (2.6 ms with SEEK command)		
Transfer rate	100K bits per second (maximum)		
Transfer method	64 bytes block transfer		
Interface	8-bit parallel (DMA capability)		Expansion use
Temperature range Operation Non-volatile storage	 0°C to 50°C −40°C to 85°C		
Withstanding external magnetic field Operation Non-volatile storage	 20 Oe (max) 50 Oe (max)		

POWER REQUIREMENTS

Power supply capacity (maximum)

	FBM-U502GA	FBM-U502GU	FBM-U502AA
+ 5V ± 5%	750 mA [500 mA]	2.8A [1.3A]	210 mA [150mA]
+12V ± 5%	70 mA [40 mA]	—	70 mA [40 mA]
−12V ± 5%	330 mA [80 mA]	—	110 mA [80 mA]

Note: Values in parentheses are typical values at standby.
In case of single power source units, current for the FBM-U502AA is supplied from the FBM-U502GU. So current for the FBM-U502GU increases by A [A] for each FBM-U502AA connected.

SYSTEM CONFIGURATION

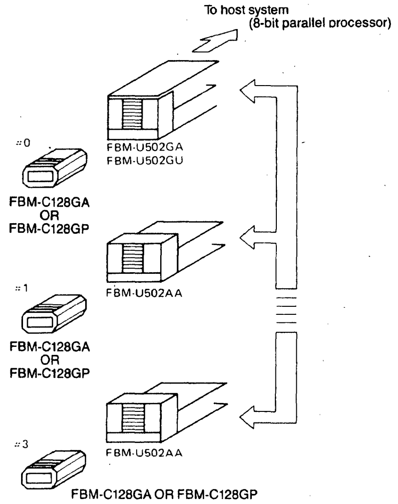
To host system
(8-bit parallel processor)
FBM-U502GA
FBM-U502GU
#0
FBM-C128GA
OR
FBM-C128GP
FBM-U502AA
#1
FBM-C128GA
OR
FBM-C128GP
FBM-U502AA
#3
FBM-C128GA OR FBM-C128GP

INTERFACE SIGNALS

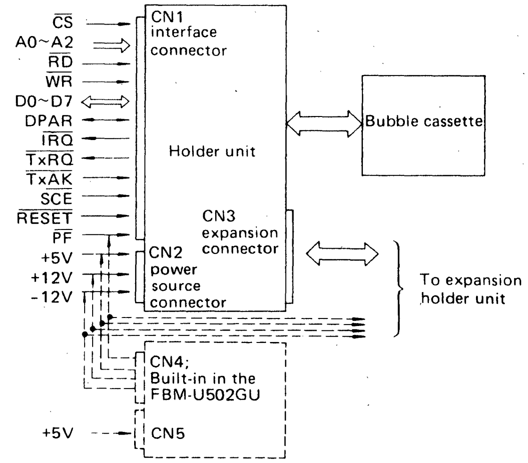
$\overline{CS}$
A0~A2
$\overline{RD}$
$\overline{WR}$
D0~D7
DPAR
$\overline{IRQ}$
$\overline{TxRQ}$
$\overline{TxAK}$
$\overline{SCE}$
$\overline{RESET}$
$\overline{PF}$
+5V
+12V
-12V
CN1
interface
connector
Holder unit
Bubble cassette
CN3
expansion
connector
CN2
power
source
connector
To expansion
holder unit
CN4;
Built-in in the
FBM-U502GU
+5V
CN5

DIMENSIONS

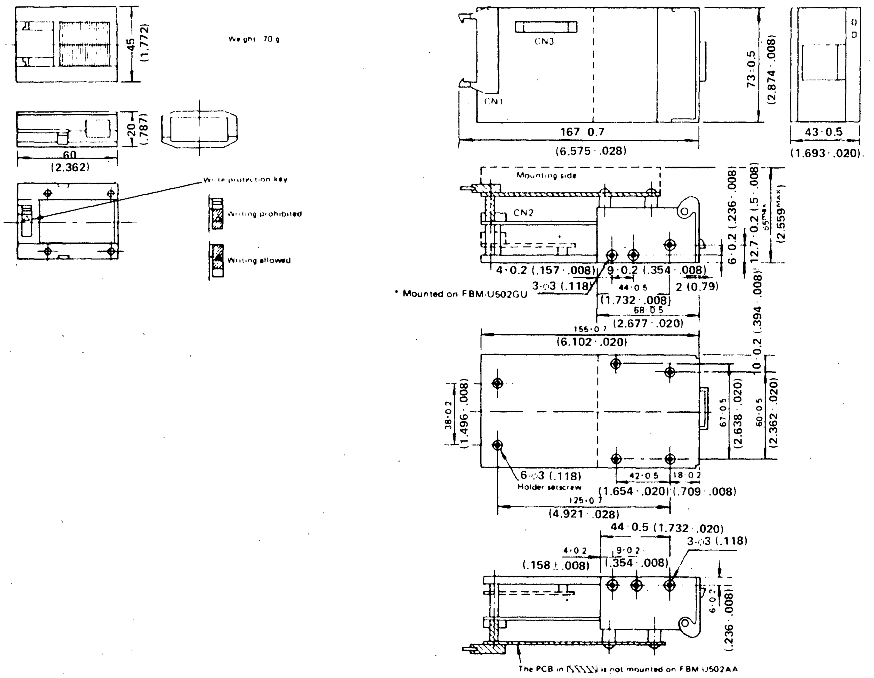
45
(1.772)
Weight 70 g
20
(.787)
60
(2.362)
Write protection key
Writing prohibited
Writing allowed
CN3
CN1
73±0.5
(2.874±.008)
167±0.7
(6.575±.028)
43±0.5
(1.693±.020)
Mounting side
CN2
4±0.2 (.157±.008)
9±0.2 (.354±.008)
3-φ3 (.118)
44±0.5
(1.732±.008)
2 (0.79)
68±0.5
(2.677±.020)
155±0.7
(6.102±.020)
* Mounted on FBM-U502GU
6±0.2 (.236±.008)
12.7±0.2 (.5±.008)
(2.559)
10±0.2 (.394±.008)
38±0.2
(1.496±.008)
67±0.5
(2.638±.020)
60±0.5
(2.362±.020)
6-φ3 (.118)
Holder setscrew
42±0.5
(1.654±.020)
18±0.2
(.709±.008)
125±0.7
(4.921±.028)
44±0.5 (1.732±.020)
4±0.2
(.158±.008)
9±0.2
(.354±.008)
3-φ3 (.118)
6±0.2
(.236±.008)
The PCB in ▨ is not mounted on FBM-U502AA

Unit: mm (inch)

OPERATING AMBIENT TEMPERATURE RANGE

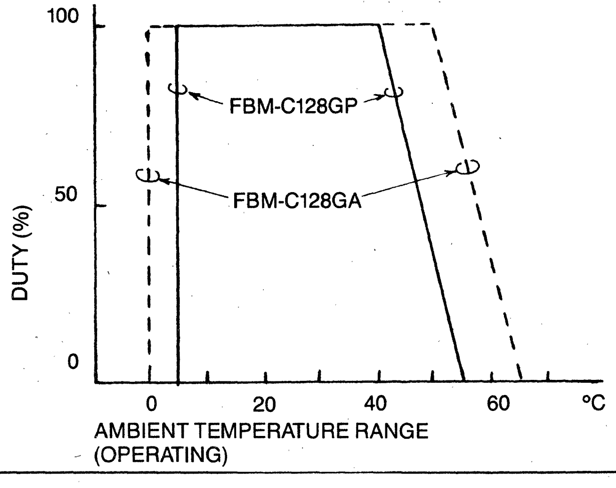

(CONDITION)

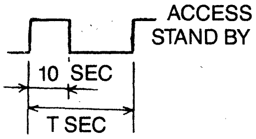
ACCESS
STAND BY
10 SEC
T SEC

$$\text{DUTY} = \frac{10}{T} \times 100\ (\%)$$

USUALLY ABOUT 10 SEC
TO READ OR WRITE ALL
DATA 1M BIT.

IEEE796 Bubble Memory Card

FUJITSU

FBC501M4M: 128K bytes
FBC502M4M: 256K bytes
FBC503M4M: 384K bytes
FBC504M4M: 512K bytes

Product on this page supercedes product referenced in Index.

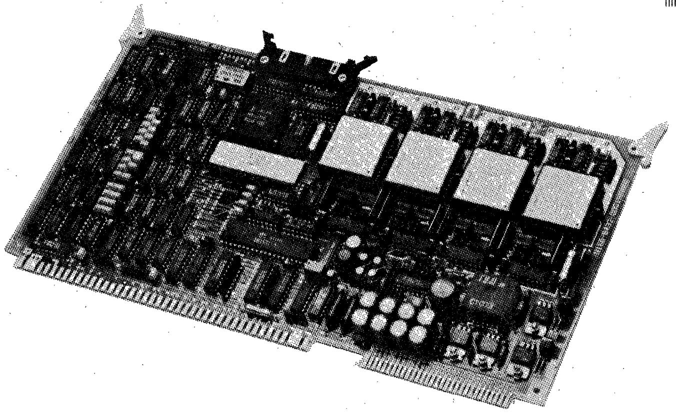

Fujitsu's FBC504M4M-series bubble memory cards are high-density memory cards with system buses that are compatible with the IEEE796 standard. The FBC504M4M-series bubble memory cards, with built-in 1M-bit bubble memory devices, allow a user to solidify file memory, improve system functions, upgrade reliability, and reduce maintenance costs.

FEATURES

- **Non-volatile memory**
  Data is retained even when power is off.
- **Maintenance-free**
  Fujitsu's bubble memory is maintenance-free — there are no movable parts, and battery backup is not necessary.
- **High-speed access**
  The average access time of bubble memory is 12.5 ms, faster than floppy disks.
- **Massive storage capacity**
  Bubble memory storage capacity is 128K bytes, 256K bytes, 384K bytes, or 512K bytes. Memory capacity can be expanded up to 4M bytes by using extension ports.
- **1M-bit bubble cassette connectable**
  By connecting a bubble cassette, the user can change jobs or transfer data offline easily.
- **8-bit/16-bit data bus**
  An 8-bit or 16-bit data bus can be selected.
- **+5V single power source**
  Since the cards operate from a single +5V power source, designing a power supply is easy. And Power Fail circuit is built in.
- **Error correction function**
  Burst errors of up to 3 bits can be corrected by ECC.
- **Built-in DMA controller**
  Each board has a DMA controller equivalent to the 8257.

SPECIFICATIONS

	FBC501M4M	FBC502M4M	FBC503M4M	FBC504M4M
Storage capacity	128KB	256KB	384KB	512KB
Interface	IEEE Std-796 (TTL-compatible)			
Access time	12.5 ms average			
Transfer system	64-byte block transfer			
Transfer rate	100K bits/s max.			
Average power consumption	13W	14W	15W	17W
Supply voltage	+5V ± 5%			
Average supply current	2.5A	2.8A	3.1A	3.3A
Ambient temperature range				
Operating	0°C to 50°C			
Information storage	-40°C to 85°C			
Card dimensions	304.8 mm x 171.5 mm x 15.0 mm			

- The FBC504M4M-series bubble memory cards operate as memory-mapped I/O and require only a 64-byte memory space. The base address can be set in units of 64 bytes.
- The following products can be connected to the extension ports:
  512K-byte extension memory card. . . . FBC504D4P
  Extension holder unit FBM-U502MU
  128K-byte bubble cassette. FBM-C128GA
  (Connector: FCN-747J030-AU/0)

128K Byte Bubble Memory Card

FUJITSU

FBC501M4E
FBC501M4E-N

Product on this page supercedes product referenced in Index.

OPERATING AMBIENT TEMPERATURE RANGE

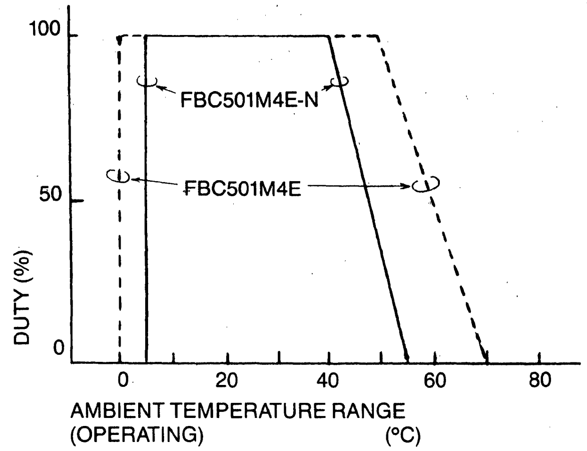

(CONDITION)

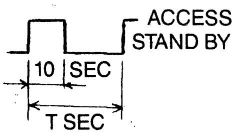

$$\text{DUTY} = \frac{10}{T} \times 100\ (\%)$$

USUALLY ABOUT 10 SEC TO READ OR WRITE ALL 1M BIT.

The FBC501M4E (-N) bubble memory card, with its built-in 1M bits bubble memory chip and unique control circuit, provides 128K bytes of easy-to-change nonvolatile memory. Measuring only 10 cm x 10 cm, this card is ideal for use in compact equipment, such as a mini-file or program memory.

FEATURES

- **Maintenance-free solid file**
  Maintenance is not necessary because the card has no moving parts and does not require battery backup.
- **General-purpose interface and DMA**
  The 8-bit parallel interface enables easy connection to any microprocessor.
- **Error correction function**
  In addition to the ECC error correction function, a bus parity check is also provided to detect errors resulting from noise on the bus.
- **A wide variety of commands**
  The card has a total of 24 commands, including R/W, SEEK (high-speed access), and ABORT (emergency stop).
- **Useful sub-pages**
  Three sub-pages can be added to the 128K-byte data area to store system control data.
- **New method for storing defective loop information**
  The boot loop method is used to minimize initialization time.

SPECIFICATIONS

P/N		FBC501M4E	FBC501M4E-N
Device circuit configuration		Block replicator swap	
Memory capacity		131,072 bytes	
Capacity per page		64 bytes	
Number of pages		2,048 pages	
Interface		8-bit parallel (DMA available)	
Mean access time		12.5 ms	
Transfer rate		100K bits/s	
Transfer method		64-byte block transfer	
Power consumption		On 4.8W Standby 2.8W	
Power source		+ 5V ± 5% 500mA (max.) + 12V ± 5% 40mA (max.) − 12V ± 5% 300mA (max.)	
Ambient temperature	Operation	0°C to 50°C	5°C to 40°C
	Data Storage	− 40°C to 85°C	− 30°C to 70°C
Withstanding magnetic disturbance field		Operation: 20 Oe Information storage: 50 Oe	
Error correction		OK	
Card size		101.6 mm x 106.0 mm	

EXTERIOR DIMENSIONS

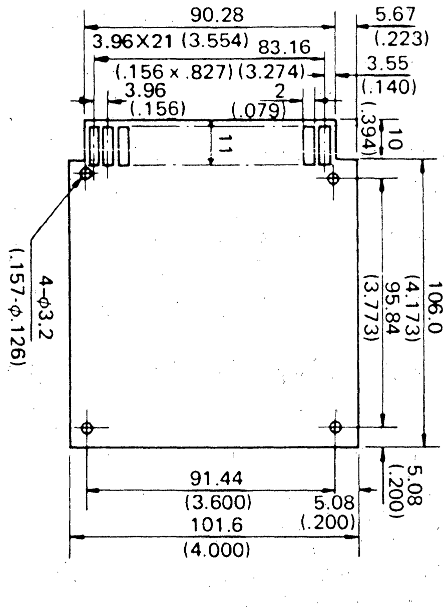

Unit: mm (inch)

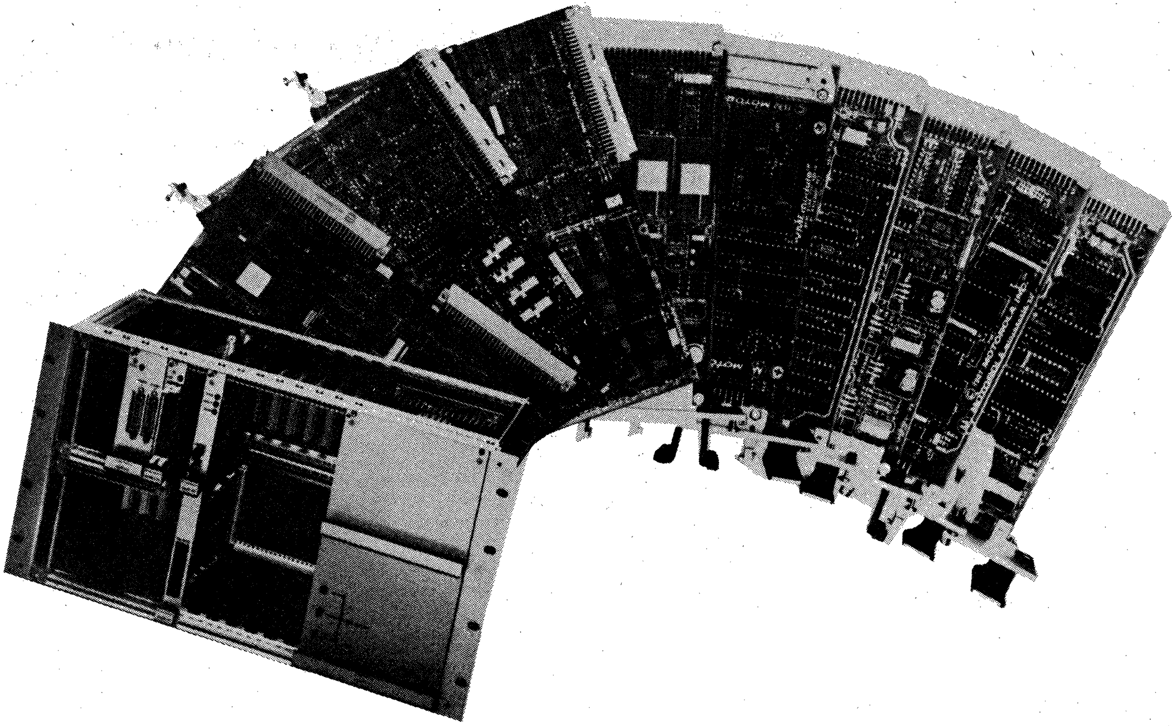

VMEmodules

Motorola takes the power of the M68000 Microprocessor Family, combines it with VMEbus — the accepted world standard in microsystem architectures — and implements this powerful combination in a broad line of modular products that offer a wide range of systems capabilities. VMEmodules utilize the Eurocard form factor; allow the interconnection of 8-, 16-, and 32-bit processors and peripherals; and are supported by the high-performance VERSAdos Real-Time Operating System. At this printing, well over 1000 VMEbus-compatible products are offered by more than 200 international vendors.

Eurocard Format Developed as the standard in Europe, this card format is gaining world-wide acceptance in modular applications in a broad range of engineering, laboratory, and industrial automation environments. Both single high (160 x 100mm) and double high are defined, offering (160 x 233.4mm) formats and card cages, a convenient size, and 96-pin/socket DIN connectors provide an extra margin of reliability.

8-/16-/32-bit VMEbus The VMEbus does not limit designers to today's technologies; its inherent flexibility and capabilities allow adaptation to any number of types of popular processors for true multi-processing applications. It allows mixing of as many bus masters as desired. The VMEbus enables mixing of 8-, 16-, or 32-bit processors in the VME backplane, operating at high speeds, asynchronously, and providing seven interrupts and four levels of bus priority arbitration.

RMS68K and VERSAdos Software Support VMEmodule products are designed for accurate response to multiple random events. The RMS68K Real-Time Multitasking Executive Software for the VMEmodule Monoboard Microcomputer provides a nucleus for real-time applications. Where large data files and mass storage resources are required, the full-featured VERSAdos Operating System provides efficient execution.

Multiple Worldwide Sources Development of the VMEbus represents the combined technical efforts of Motorola and a number of other major international electronics companies (Signetics/Philips, and Mostek for example). An increasing number of companies are joining the original participants in supplying a wide variety of compatible products. These sources are united by the VMEbus International Trade Assocation meeting four times each year to ensure continued compatibility from a diversified list of suppliers.

VMEmodules allow you to maximize your engineering time by elevating your designs from component level complexity to board-level simplicity. Quickly. Efficiently. And with the assurance of high-performance, proven reliability, and upward compatibility. VMEsystem: the design solution that not only challenges today's technological limits, but anticipates tomorrow's progress as well.

System Controller VMEbus Modules

MVME025 VME Slot 1 System Controller Module providing round-robin and priority VMEbus arbitration, power-up reset, system clock, and bus time-out logic. The board is designed to be used with MVME120 series processor modules.

MVME050 VME Slot 1 System Controller and Utility Module. The board provides priority VMEbus arbitration, power-up reset, system and serial bus clocks and bus time-out logic. The utility functions include global interrupt generation, real-time clock/calendar, printer port, two sync/async serial ports, and a two-digit hexadecimal diagnostic display. Eight sockets are available for diagnostics or system memory. MVME050 is designed to work with MVME120. MVME701 I/O Transition Module is available to simplify serial and parallel port expansion.

MC68000 CPU VMEbus Modules

The MC68000 is the first member of the Motorola Family of advanced 16/32 bit microprocessors. It is a fully-implemented 16-bit microprocessor with 17 general purpose 32-bit data and address registers. The MC68000 possesses an asynchronous bus structure with non-multiplexed 24-bit address bus and 16-bit data bus. This provides for a direct addressing range of 16 megabytes.

MVME101 VMEbus Monoboard 8 MHz MC68000 Microcomputer with two serial ports and two parallel I/O ports; includes 8 sockets for 2K to 32Kbyte RAM/ROM devices, 16 bidirectional parallel I/O lines, three off-board-accessible programmable 16-bit counter/timers, hexadecimal LED status display, and seven interrupt levels with bus arbitration. Designed to serve as a system controller (slot 1).

MVME110-1 VMEbus Monoboard 8 MHz MC68000 Microcomputer with one serial port, includes 8 sockets for 2K to 32Kbyte RAM/ROM/EPROM devices, I/O Channel interface, three off-board-accessible programmable 16-bit counter/timers, run/halt/fail LED status lights, and seven interrupt levels with bus arbitration. Designed to serve as a system controller (slot 1).

MC68010 CPU VMEbus Modules

The MC68010 is the virtual memory version of the MC68000 microprocessor. Its internal architecture, instruction set and bus structures are identical to the MC68000, making the MC68010 fully upward object code compatible. In addition to all of the resources of the MC68000, the MC68010 offers high speed loop-mode operation which allows for faster execution of tight software loops. The added features of virtual memory support and enhanced instruction execution timing make the MC68010 one of the fastest and most versatile MPUs on the market.

MVME117-1 VMEbus Monoboard 10 MHz MC68010 Microcomputer with 128Kb of zero wait-state DRAM, four sockets for up to 256Kb EPROM, two serial ports, two parallel ports, and real-time clock with on-board battery, optional SCSI™ bus interface, socket for MC68881 Floating Point Coprocessor, designed to be used as System Controller (slot 1).

MVME117-2 Same as MVME117-1 except no SCSI bus interface.

MVME117-3 Same as MVME117-1 except 512Kb Dynamic RAM.

MVME117-3FP Same as MVME117-3 with the addition of MC68881.

MVME117-4 Same as MVME117-3 except no SCSI bus interface.

MVME120 VMEbus Processor Module with 10 MHz MC68010 CPU, MC68451 Memory Management Unit, 4Kb zero wait state CACHE Memory, 128Kb dual-ported Dynamic RAM with byte parity, one serial port, three 16-bit timers, and two sockets for 2K x 8 to 64K x 8 byte EPROM (user provider). MVME025, MVME050, or other VMEbus System Controller required.

MVME121 Same as MVME120 except 512Kb Dynamic RAM.

MVME122 VMEbus Processor Module with 12.5 MHz MC68010 CPU, 128Kb of dual-ported Dynamic RAM, three 16-bit timers, and two sockets for 2K x 8 to 64K x 8 bytes EPROM (user provided). MVME025, MVME050, or other VMEbus System Controller required.

MVME123 Same as MVME122 except 4Kb zero wait state CACHE memory and 512Kb dual-port Dynamic RAM.

MC68020 CPU VMEbus Modules

The MC68020 is the newest member of the M68000 Family. While it is the first complete, commercially available 32-bit microprocessor and has several features which make it unique, the MC68020 is fully upward object code compatible with all members of the M68000 family. It has non-multiplexed 32-bit address and data buses with innovative techniques to improve bus efficiency, an enhanced instruction set and instruction cache for high-speed performance advantages, and new instructions and addressing modes for improved operating system support. These features combine with an embedded coprocessor interface to help establish the MC68020 as the performance standard for 32-bit micro systems.

MVME130 VMEbus Monoboard 12.5 MHz MC68020 Microcomputer with sockets for MC68881 Floating Point Coprocessor and MC68851 Demand Paged Virtual Memory, MVMX32bus interface, full 32-bit address and data, dual multiprotocol serial I/O ports, programmable timer, and sockets for two 24/28 pin ROM/EPROM devices.

MVME130COF Same as MVME130 with the addition of MC68881 Floating Point Coprocessor.

MVME130DON Same as MVME130 except 16.67 MHz clock.

MVME130DOF Same as MVME130COF except 16.67 MHz clock.

MC68020 CPU VMEbus Modules — continued

MVME131 Same as MVME130 with the addition of Demand Paged Memory Management Module (M68KVMMB).

MVME131COF Same as MVME131 with the addition of MC68881 Floating Point Coprocessor.

MVME131DON Same as MVME131 except 16.67 MHz clock.

MVME131DOF Same as MVME131COF except 16.67 MHz clock.

Memory Expansion Modules

MVME201 VMEbus 256Kbyte Dynamic Memory Module featuring byte parity checking and user selectable memory map assignment.

MVME202 VMEbus 512Kb Dynamic RAM Memory Module featuring byte parity checking and user selectable memory map assignment.

MVME222-1 Same as MVME202 except 1Mb Dynamic RAM.

MVME222-2 Same as MVME202 except 2Mb Dynamic RAM.

MVME204-1 VMEbus 1Mb Dynamic Memory Module with MVMX32bus interface, dual-ported interleaved, byte parity and error checking. Designed to be used with MVME130/131 Series.

MVME204-2 Same as MVME204-1 except 2Mb Dynamic RAM.

MVME205 VMEbus 1Mb Dynamic RAM with byte parity and full A32/D32 VMEbus interface with user selectable memory map assignment.

MVME211 VMEbus Static RAM/ROM Module for added memory-mapped program (up to 1Mb); provides 16 sockets for 24/28-pin user supplied memory devices (SRAM or EPROM); device access time is selectable from 35 to 510 ns.

MVME214 VMEbus Static RAM/ROM Module for added memory (up to 1Mb); provides 16 sockets for 24-/28-pin user supplied memory devices; device access time is selectable from 100 to 400 ns, MVMX32bus Interface. Designed to be used with MVME130/131 Series.

VMEbus Interface Controllers

MVME300 VMEbus GPIB IEEE-488 Listener/Talker/Controller Module using DMA interface for burst or byte mode data transfer rates to 500Kbytes/sec., includes error checking and status display.

MVME310 VMEbus Intelligent Peripheral Controller Module based on MC68121 device enables custom peripheral interface implementation via serial port and header accessible interface signals; provides large wirewrap area and for up to 32Kb of dual ported static RAM buffer (4Kb supplied) and up to 32Kb of RAM/ROM/EPROM, and custom user application logic.

MVME315 VMEbus Intelligent Peripheral Interface, provides control for up to four SS/DS, DS/DD floppy disk drives, support for 4-channel DMA, 8Kb of dual ported RAM with controller, a SASI bus interface, a peripheral interrupt controller with full VMEbus interface and interrupt control, and a universal interface controller (MC68121) with RS-232C serial port; control firmware for support of a XEBEC Winchester Controller on the SASI interface is provided in two 8Kb PROMs.

MVME319 VMEbus Intelligent Floppy/Tape Controller and SASI/SCSI Interface Module based on the MC68121. This module enables control of cipher floppy-tape, 8 inch or 5¼″ floppies in any combination; supports up to eight mini-Winchester controllers via a XEBEC or Adaptech SASI/SCSI interface; DMA controller; 32Kb dual-ported RAM with controller; control firmware provided in two 8Kb ROMs.

MVME320-1 VMEbus Intelligent Winchester/Floppy Disk Controller Module provides high performance data channels between System memory and ST506 Winchester and/or floppy disk drives; up to two Winchester and two floppy disk drives or four floppy disk drives.

MVME330 VMEbus Ethernet Node Processor/LAN Controller Communications Module provides high performance for 10Mbps Ethernet interface, incorporates MC68000 MPU, the MK68590 LANCE Ethernet Controller, the AM7991 Serial I/O Adapter; and onboard EPROM containing power-up self-test routines plus kernel software giving data transfer rates up to 200 1Kbyte packets/second. Available with network software including XNS host resident utilities, drivers and XNS protocol software for UNIX SYSTEM V/68 and VERSAdos. Consult factory for details of ordering information for additional software.

VMEmodules — continued

VMEbus INTERFACE CONTROLLERS — continued

MVME331 VMEbus Intelligent Communications Controller with six serial I/O ports, configurable for synchronous or asynchronous and for either RS-232C or RS-422 electrical protocols. MVME705 or MVME706 Transition Modules available. Onboard intelligence includes MC68010 CPU at 10 MHz, with two sockets for firmware, and 128Kb of Dynamic RAM for data buffering. This module also has firmware for implementing asynchronous protocol on all six channels (up to 9600 baud bidirectional on all channels simultaneously).

MVME332 VMEbus Intelligent Communications Controller with eight serial I/O ports for asynchronous RS232C protocols. Onboard hardware includes MC68010 at 10 MHz, two sockets for firmware, and 128Kb of Dynamic RAM for data buffering.

MVME333 Same as MVME331 with the addition of a high-speed bidirectional DMA on two of the channels for high-speed (up to 1Mb/second) synchronous protocols, i.e. X.25 packet switching networks.

MVME360 VMEbus SMD Disk Controller Module supports up to 24 Mbps transfers for SMD or XSMD with one-to-one interleaving, ECC, zero latency read/write, intelligent CACHE algorithm, ultra high speed DMA, A24/A32:D32/D16.

MVME370SET-1 VMEbus to MAP Network Intelligent Interface Modules. A two board set comprising controller and modem boards, a 16-bit microprocessor, 128Kb DRAM, MAP 2.1 Layers 1–4 software, MAP 2.1 channel group 3′/4′/P/Q, Token Bus logic supported under UNIX SYSTEM V Operating System on 5¼″ diskette.

MVME370SET-2 Same as MVME370SET-1 except MAP 2.1 channel group 4A′/5′/R/S.

MVME370SET-3 Same as MVME370SET-1 except MAP 2.1 channel group 6′/FM1′/T/U.

MVME370KIT-1 VMEmodule MAP Network Developer's Kit. Network Developer's Kit including all the elements (Head-end Remodulator, coax, taps) required to implement a two-node MAP network.

MVME370KIT-2 VMEmodule MAP Network Developer's Kit. Same as MVME370KIT-1 except will handle a four-node implementation.

MVME372 VMEbus Advanced MAP Interface Controller. High performance VME-compatible 10 Mbps MAP network controller implementing all seven layers of the MAP 2.1 protocol. Available mid 1986.

VMEbus to I/O Channel Module

MVME316 VMEbus to I/O Channel Interface Module that translates addresses and interrupts; and buffers data between the VMEbus and I/O channel. The module configures the I/O channel as a global resource that is accessible by only VMEbus master.

VMEbus Modules

MVME340 VMEbus Parallel I/O Module provides 64 parallel I/O lines; three 24-bit timers; three interrupters; one 32-bit and one 16-bit data channel or any combination of 16-bit and 8-bit data channels; 4Gb, 16Mb or 64Kb address range.

MVME350 VMEbus Intelligent Streaming Tape Controller with on-board MC68010 with buffer and firmware control to handle QIC-02 Format ¼″ Cartridge Tape Drives.

MVME390 VMEbus Graphics Display Controller for direct bit-mapped display control from the VMEbus. The controller can be used for up to 1024 x 1024 pixel displays at 60 Hz refresh in the non-interlaced mode for very high resolution flicker free displays. Other display resolutions are possible through programming changes. Two board set for both color and monochrome monitors.

MVME390-1 Same as MVME390 except only the monochrome monitor controller module is offered.

I/O Channel Modules

Motorola provides I/O Channel modules on single-high Eurocard boards to provide a wide range of system flexibility for I/O expansion at low incremental cost. The I/O Channel has a 12-bit address bus, an 8-bit bidirectional data bus, 4Kbytes of memory-mapped I/O, and a data transfer rate of up to two Megabytes per second. In addition to providing more modularity between the main processor and the I/O controllers, use of the I/O Channel increases overall system performance by allowing most lower-speed I/O activity to take place in the I/O Channel rather than on the system bus.

I/O CHANNEL MODULES — continued

MVME400 Dual Channel RS-232C Communications Module, provides two I/O Channel compatible, full duplex, serial I/O ports; software and jumper selection enables sync/async baud rates of 50 to 19.2K-bits as a terminal or modem.

MVME410 Dual 16-Bit Parallel I/O Module provides four independent 8-bit/2-handshake-bit (40 lines) using two fully buffered MC6821 PIAs, two 50-pin outputs provide Centronics type parallel interface for two printers; jumpers enable selection of interrupt priority, channel I/O designation, I/O bit for software controlled fail LED, and PIA control.

MVME420 SASI (Shugart Associates System Interface) Bus Peripheral Interface Adapter Module, provides single host nonarbitrating SA400 disk controller interface for I/O Channel.

MVME435A Magnetic Tape Interface Adapter Module, provides buffered ½″ 9-track, 4K-bit FIFO buffer and interface for two industry standard PERTEC compatible 9-track 800/1600 bpi magnetic tape formatters, each controlling four 25-/125-ips tape drivers in start stop mode.

MVME600 12-Bit A/D Converter Module, provides 8/16 differential/single-ended channels with four full scale input voltage ranges of 0.5, 1, 5, or 10 volts; the 16-channel multiplexer will accept additional inputs from up to five MVME601 expander input cards.

MVME601 A/D Input Expander Module provides 8/16 differential/single-ended channels for input to the MVME600 module.

MVME605 12-Bit D/A Converter Module, provides four channels of 12-bit D/A conversion with five voltage output ranges of 0–0.5, 0–10, ±2.5, ±5, and ±10 volts and two current loop output ranges of 4 to 20 mA and 10 to 50 mA.

MVME610 AC Input Module, monitors status of up to eight 120/240 Vac sources; max input it 300 Vac with isolation to 2500 Vac.

MVME615 AC Output Module (Zero Crossover), provides means of switching eight independent outputs of 120/240 Vac; maximum current switching is 3 amps rms.

MVME616 AC Output Module, same as MVME615 but without zero crossover switching.

MVME620 DC Input Module, provides eight input channels for 10 to 60 Vdc signal monitoring, inputs have 2500 volt isolation and provide input overvoltage and transient protection.

MVME625 DC Output Module, provides eight 10 to 60 Vdc output pairs, each with 2500 volt isolation, inductive load transient suppression, and overcurrent protection, 2 amps max.

I/O Transition Modules

MVME701A I/O Transition Module double-high 80mm Eurocard, DIN to DB25 and 50-PIN dual row header provides connector for MVME050 serial and parallel ports; and battery back-up for MVME050 time-of-day clock (user installed).

MVME705 I/O Transition Module double-high 80mm Eurocard format for six-channel serial transceiver module. Each channel can be independently configured for the RS-232C or RS-422 standard. Sockets are provided on the board to insert RS-232C or RS-422 driver and receiver devices. These devices are provided with the module. Free space is available for the user-supplied slew-rate limitation and noise filtering capacitors. Designed to be used with MVME331, MVME333.

MVME706 Same as MVME705 except all channels are already RS-232C standard available.

MVME707 MVME130 RS-232C distribution board with dual RS-232C Serial I/O Cable Assembly. Designed to be used with MVME130/131.

MVME708-1 I/O Transition Module for MVME117 series provides standard connectors for serial port, parallel port, and SCSI bus interface.

Packaging Accessories

MVME820 Plug-in mass storage module for MVME943 chassis includes 15Mb Winchester hard disk drive and 655Kb DS/DD 5¼″ floppy disk drive. A Winchester/Floppy Disk Controller Module is required (see MVME320).

MVME821 Plug-in mass storage module for MVME943 includes two 655Kb DS/DD 5¼″ floppy disk drives. A Floppy Disk Controller Module is required (see MVME315 or MVME320).

MVME822 Plug-in Mass Storage Module for MVME943-1 Chassis includes 40Mb Winchester hard disk drive and 655Kb DS/DD 5¼″ Floppy disk drive. A Winchester/Floppy Disk Controller Module is required (see MVME320).

MVME910-3 VMEmodule 200 Watt Switching Power Supply Module, provides +5 Vdc @ 30 Amps, +12 Vdc @ 3 Amps, and −12 Vdc @ 1 Amp; includes overvoltage and overload protection. Front chassis plug-in.

VMEmodules — continued

PACKAGING ACCESSORIES — continued

MVME920A VMEbus Backplane, provides 20 DIN 41612C 96-pin VMEbus sockets for use with signals up to 20 MHz; includes power and ground connections, and bus terminator.

MVME921A VMEbus Backplane, same as MVME920 except provides 9 DIN 41612C 96-pin VMEbus sockets.

MVME922A I/O Channel Backplane provides 5 DIN 41612C 96-pin I/O Channel sockets (will accept five single-high I/O Channel Eurocard modules).

MVME930 VMEbus Extender Module, double-high, provides identification of each P1 trace with shorting jumpers.

MVME931-1 VMEbus Wirewrap Module, double-high, with ground plane; provides two 96-pin DIN bus connectors for user installation.

MVME932 VMEbus Extender Module, single-high, provides identification of each trace.

MVME933-1 VMEbus Wirewrap Module, single-high, with ground plane; provides one 96-pin DIN bus connector for user installation.

MVME935 I/O Channel to 50-pin header Adapter; brings I/O Channel to front of Eurocard Chassis.

MVME940-1 VMEbus and I/O Channel 19″ Chassis with MVME910-3 power supply; provides seven double-high VMEbus slots, two 5-slot I/O Channel backplanes with single-high hardware and cables.

MVME941 VMEbus and I/O Channel Card Cage for 19″ rack mount includes nine double-high VMEbus backplane slots and two 5-slot I/O Channel backplanes with single-high mounting hardware and cables for five I/O Channel Modules.

MVME942 VMEbus 20-Slot Double-High VMEbus Card Cage for 19″ rack mount.

MVME943-1 VMEbus I/O Channel Chassis with nine VMEbus slots, six I/O channel slots, sixteen 80 mm I/O Transition Modules (MVME700 series) in the back, accepts MVME820 or MVME821 Mass Storage Module, transverse mid chassis 400 watt power supply, 19″ rack mount chassis.

MVME944-1 VMEbus Module Chassis with 20 VMEbus slots and sixteen 80 mm I/O Transition Modules (MVME700 series) transverse mid-chassis 400 watt power supply, 19″ rack mount chassis.

VMEsystem 1000 Microcomputer System Family

The VMEsystem 1000 Family of rack-mounted OEM microcomputer systems is part of Motorola's new "Open System" product line. Open System products are engineered to provide a logical starting point from which to tailor high-performance, application-specific products using M68000-based VMEmodules. The VMEsystem 1000 Family is designed for a wide variety of uses in the fields of Industrial Automation, Communications/Networking, and Factory Control Systems. By choosing from a wide selection of VMEmodules, original equipment manufacturers can use the VMEsystem 1000 Family to customize their systems to meet a wide variety of system requirements.

VMEsystem 1000 products feature a VME chassis with card cage, a 400 watt power supply, a 40Mb or 70Mb Winchester, and a 1Mb floppy disk drive. Other features of this product line include:

- Multi-user Capability
- VERSAdos and SYSTEM V/68 Support
- Capability to Incorporate Six Additional VMEmodules
- 24-bit VME Backplane with Sufficient Slots and Power to allow OEM Configurations for Graphics, Memory, and LAN/WAN
- Optional Terminal/Keyboard Available

SYS1121VY221 VMEsystem 1121 System featuring MVME121 10 MHz MC68010 Processor Module, MVME050 System Controller Module, MVME320-1 Winchester/Floppy Controller Module, MVME701A I/O Transition Module, MVME702A Disk Interface I/O Transition Module, MVME822 40Mb Winchester 655Kb Floppy Mass Storage Module, enclosed in a 400 watt chassis. An additional six slots for VMEbus modules, six I/O Channel slots, and 20 I/O Transition Modules. VERSAdos Operating System is included.

SYS1121UY221 VMEsystem 1121 System featuring MVME121 10 MHz MC68010 Processor Module, MVME050 System Controller Module, MVME202 512Kb DRAM Module, MVME320-1 Winchester/Floppy Controller Module, MVME701A I/O Transition Module, MVME702A Disk Interface I/O Transition Module, MVME822 40Mb Winchester 655Kb Floppy Mass Storage Module, enclosed in a 400 watt chassis. An additional five slots for VMEbus modules, six I/O Channel slots, and 20 I/O Transition Modules. UNIX SYSTEM V/68 Operating System is included.

SYS1131VY221 VMEsystem 1131 System featuring MVME131 12.5 MHz MC68020 Processor Module, MVME050 System Controller Module, MVME204-1 1024Kb DRAM Module, MVME320-1 Winchester/Floppy Controller Module, MVME701A I/O Transition Module, MVME702A Disk Interface I/O Transition Module, MVME707 I/O Transition Module, MVME822 40Mb Winchester 655Kb Floppy Mass Storage Module, enclosed in a 400 watt chassis. An additional five slots for VMEbus modules, six I/O Channel slots, and 20 I/O Transition Modules. VERSAdos Operating System is included.

SYS1131UY221 VMEsystem 1131 System featuring MVME131 12.5 MHz MC68020 Microcomputer Module, MVME050 System Controller Module, MVME204-1 1024Kb DRAM, MVME320-1 Winchester/Floppy Disk Controller Module, MVME701A I/O Transition Module, MVME702A Disk Interface I/O Transition Module, MVME707 I/O Transition Module, 70Mb Winchester 655Kb Floppy Disk Module, enclosed in a 400 watt chassis. An additional five slots for VMEbus Modules, six slots for I/O Channel Modules, and 15 slots for I/O transition Modules.

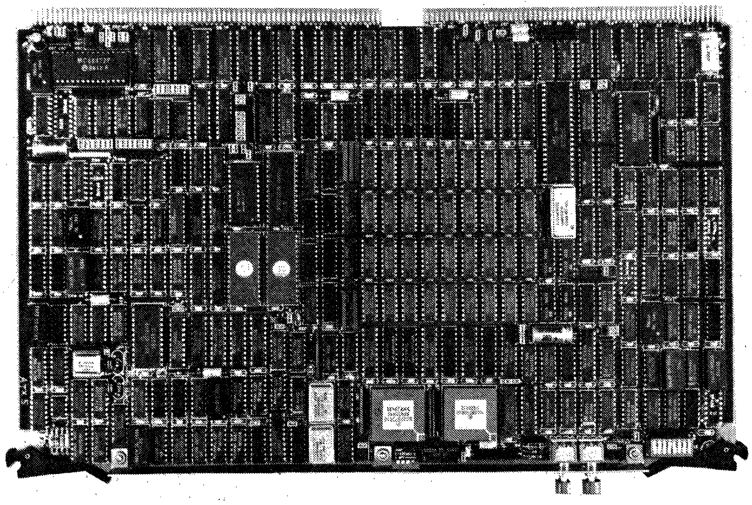

VERSAmodules

As MPUs begin to perform like mainframes, the system-level bus must change accordingly. To thoroughly exploit the capabilities of today's rapidly advancing technologies, a high-performance 16/32-bit bus architecture is needed with the proper hardware, architectural features, and adequate provisions for future growth. VERSAbus meets these evolving high-end requirements by providing designers with the architectural characteristics necessary to squeeze every "bit" of performance from the advanced M68000 Microprocessor Family.

VERSAmodules offer full 32-bit capability, I/O address enable, standard memory address control, expanded address enable, a secondary memory map and interrupt enable, RAM disable, ROM disable, and full TTL compatibility. System failure and diagnostic controls are extensive: multiple failure detection (AC FAILURE, DC FAILURE and BUS ERROR), cycle retry, self-test mode, system fail indication (after self-test), primary and secondary reset, system pause, and battery-backup voltage distribution.

With a mechanical form factor giving approximately 2½ times the area of the double-high VMEmodules, Motorola's VERSAmodule Family is particularly effective in complex systems demanding extraordinary memory and I/O capacity. VERSAmodules are available with the MC68000, MC68010, and the MC68020 MPU's. All these features plus a full complement of modular subsystems and extensive software support make the VERSAmodules prime candidates for systems with the most demanding requirements.

Monoboard Microcomputer Modules

VERSAmodule Monoboard Microcomputers are the most powerful 16/32-bit microcomputer modules available with features such as I/O-Channel interface, VERSAbus interconnect, bus arbitration logic, dual-port RAM, multiprotocol serial I/O, parallel I/O, programmable timer/counters and battery back-up capability for RAM.

VERSAmodule Monoboard Microcomputers offer a wide lattitude in on-board memory and I/O complements for a variety of applications.

M68KVM01A VERSAmodule M68000 16-Bit Monoboard Microcomputer with 32Kbytes of RAM, has 8 MHz system VERSAbus system interface with bus arbitration and interrupt handling with local private bus; includes eight sockets for up to 64Kbytes of user provided ROM or EPROM, three programmable counter/timers, two RS-232C ports for data rates to 19.2K baud or 1 mbps with external clock, both may be strapped for terminal or modem interface; one port is programmable for Sync/Async and strappable to RS-422 interface. Four 8-bit/2-handshake-bit I/O ports are also provided for use as two parallel printer ports or as 8-/16-bit buffered data and control interfaces.

M68KVM01A2 Same as M68KVM01A but with 64Kbytes of RAM.

M68KVM02-3 Similar to M68KVM01A but with 128Kbytes of dual port RAM control, two additional sockets for up to 64Kbytes of user supplied ROM/EPROM, and two multiprotocol RS-232C Serial I/O ports for both sync/async byte oriented or SDLC/HDLC bit-oriented protocols, and local off-board I/O expansion via I/O Channel interface.

MONOBOARD MICROCOMPUTER MODULES — continued

M68KVM03-1 VERSAmodule MC68010 16-Bit Monoboard Microcomputer with 256Kbytes of RAM, has 10 MHz system VERSAbus system interface with bus arbitration and interrupt handling with local private bus; includes MC68451 MMU, MC6840 Programmable timer module, MC146818 Real-Time Clock, two sockets for up to 64Kbytes of user provided ROM or EPROM, three programmable counter/timers, two RS-232C ports for data rates to 19.2K baud or 1 mbps with external clock, both may be strapped for terminal or modem interface; one port is programmable for Sync/Async and strappable to RS-422 interface. Four 8-bit/2-handshake-bit I/O ports are also provided for use as two parallel printer ports or as 8-/16-bit buffered data and control interfaces. Also includes I/O Channel interface for off-board I/O expansion (refer to pages 36–38 for I/O Channel compatible modules).

M68KVM03-3 Same as M68KVM03-1 except no MMU.

M68KVM04-1 The VERSAmodule 32-bit Monoboard Microcomputer Module is designed to function in those applications requiring maximum performance while maintaining the versatility inherent with VERSAmodule systems. Highest performance is attained when the VM04 is used in conjunction with one or more M68KVM13 (VM13) Dual-Ported RAM Cards operating as a main memory. The VM04 is the first VERSAmodule product to offer the following:

MC68020 Microprocessor with 32-bit address and data, provision for MC68881 Floating Point Coprocessor (customer-supplied option), Demand Paged Virtual Memory Management Module implemented with gate array technology (MMB), an onboard software transparent cache configured as 4K entries, with each entry supporting full 32-bit address/data, RAMbus interface provides high-speed data path to/from memory, VERSAbus interface allows user configuration of the microcomputer system to fit the application, VERSAbus interrupter, interrupt handler, and arbiter onboard programmable timer module, dual multiprotocol serial I/O ports (Data Rate up to 100K-bits/sec), two ROM sockets configured for Industry Standard 28-pin ROM/EPROM devices, accepts 020bug Debug Monitor Firmware (optionally available).

M68KVM04-2 Same as M68KVM04-1 except no MMB.

M68KVMMB851 Memory Management Module provides hardware support for 68010/68020 users needing to implement demand paged virtual memory systems and is compatible with MC68851.

Memory Modules

M68KVM10-3 VERSAmodule 128Kbyte Dynamic RAM Module including byte parity checking, 8-/16-bit addressing, separately addressable blocks of 32Kbytes, access time is less than 400 ns.

M68KVM11-1 VERSAmodule 256Kbytes Dynamic RAM Module with Error Detection and Correction (EDAC).

M68KVM11-2 Same as M68KVM11-1 with 512Kbytes of Dynamic RAM with EDAC.

M68KVM11-3 VERSAmodule 1Mb Dynamic RAM Module with EDAC.

M68KVM11-4 Same as M68KVM11-3 except 2Mb Dynamic RAM.

M68KVM12 VERSAmodule 1Mbyte Dynamic RAM Module with parity.

M68KVM12-2 Same as M68KVM12 except 4Mb Dynamic RAM.

M68KVM13-1 VERSAmodule high performance 32-bit 1Mb of Dynamic RAM with high-speed RAMbus and byte parity. The VM13 is used with the 32-bit Monoboard Microcomputer Module M68KVM04 (VM04).

M68KVM13-2 Same as M68KVM13-1 except 4Mb of Dynamic RAM.

Peripheral Interface and Communication Modules

M68KVM20 VERSAmodule Floppy Disk Controller module, enables control of one 512Kbyte EXORdisk II drive system (two drives) or two daisy-chained 1Mbyte EXORdisk III drive systems (four drives), the IPC device provides bus control. Includes daisy-chain cable M68KVMCFD1 connections from 50-pin VERSAbus backplane.

M68KVM21 VERSAmodule Universal Disk Controller provides control for up to two SMD interface compatible hard disk drives (Control Data, SMD, CMD, MMD, and LMD) and up to 4 floppy disk drives. Compatible floppy disk subsystems include one or two daisy-chained 1Mbyte EXORdisk III drive subsystems (four 8″ drives, 2Mbytes).

PERIPHERAL INTERFACE AND COMMUNICATION MODULES — continued

The following cables are available.

M68FDIC Floppy Disk Interconnect Adapter, Industry Standard

M68KVMCFD1 Floppy Disk (EXORdisk III) Cable Assembly for M68KVMCH1 Chassis rear panel connection to UDC Module via VERSAbus backplane.

M68KVMCHD1 Hard Disk (two SMD compatible) Cable Assembly for M68KVMCH1 Chassis rear panel connection to UDC Module via VERSAbus backplane.

M68KVMSMDC Hard Disk SMD Interface Daisy-Chain Cable, 15 ft.

M68KVMSMDE Hard Disk SMD Interface Expansion Cable, 6.8 ft.

M68KVMSMDR Hard Disk SMD Interface Radial Data Cable, 15 ft.

M68KVM22 VERSAmodule Intelligent Universal Disk Controller Module based on the 68000. The M68KVM22 (VM22) provides control of up to four SMD-compatible disk drives (256, 512, or 1024 bytes/sector), supports SA800-compatible 8″ floppy disk drives or SA400-compatible 5-1/4″ floppy disk drives in any combination of four. Additional features include 128, 256, 512, or 1024 bytes/sector Frequency Modulation (FM)/Modified Frequency Modulation (MFM) recording; 32-bit Error Correction Code (ECC) allows transparent correction of 11-bit burst errors on SMD disks, 16-bit cycle redundancy check (CRC) on floppy disks, multisector 4Kb First-In First-Out (FIFO) data buffer, SMD data rate is 12M-bits/sec (max), floppy data rate is 500K-bits/sec (max).

M68KVM23 VERSAmodule intelligent Peripheral Controller Module based on MC68010. M68KVM23 supports up to four ST506/ST412 compatible 5-1/4″ Winchester disks, supports four SA400 compatible 5-1/4″ floppy disks, supports one Q1C-02 compatible 1/4″ Streaming Tape Drive, supports one Centronics compatible printer, supports 24- or 32-bit DMA addressing, 32Kb dual ported SRAM for data buffering and local MPU, 32-bit Error Correction Code (ECC), 16-bit Cyclic Redundancy Check (CRC) or floppy and streaming tape, and 7-segment LED for diagnostic messages.

M68KVM30 VERSAmodule Multi-Channel Communications Module provides four async RS-232C Serial ports (programmable for modem/terminal at baud rates of 50 to 9600 bps) and one parallel printer (Centronics type) port, includes IPC device.

M68KVM30-1KT Full Duplex Firmware upgrade kit for M68KVM30 to M68KVM30-1.

M68KVM30-1 Same as M68KVM30 except full duplex firmware.

M68KVM232CP VERSAmodule Chassis Cable Assembly (used with M68KVMCH1) provides external connection for four RS-232C devices and a parallel printer.

M68KVMPRTCE Printer Cable, Centronics type, 10 ft.

M68RS232-10 RS-232C Cable, 10 ft.

M68RS232-25 RS-232C Cable, 25 ft.

M68RS232-50 RS-232C Cable, 50 ft.

M68KVM31 VERSAmodule High Performance Intelligent Multi-channel Communications Module based on the 68000 16-/32-bit Microprocessors. Features include two M68000's running at 10 MHz, eight RS-232C serial ports programmable connection for synchronous or asynchronous communications, modem/terminal at baud rates from 110 to 153Kbits/sec. Additional features include 128Kbytes DRAM, 32Kbytes EPROM, and 32Kbytes private SRAM. Software available includes a real-time executive and VERSAbus drivers.

M68KVM32 VERSAmodule Intelligent Asynchronous Communications Module based on MC68010. Eight asynchronous channels, full duplex, RS-232C level conversion, programmable data rate to 19.2K baud, supports 24- or 32-bit DMA addressing, Centronics compatible port, 128Kb Dynamic RAM with byte parity for buffer and Writeable Control Store (WCS), and 7-Segment LED for diagnostic messages.

M68KVM33 VERSAmodule Ethernet Node Processor/LAN Controller Communications Module provides high performance 10 Mbps Ethernet interface, incorporates MC68000 MPU, the MK68590 LANCE Ethernet Controller, and the AM7991 Serial I/O Adapter; and onboard EPROM containing power-up self-test routines plus kernel software giving data transfer rates up to 200 1Kbyte packets/second. Available with network software including XNS host resident utilities, drivers and XNS protocol software for UNIX SYSTEM V/68 and VERSAdos. Contact factory for details of ordering information for additional software.

M68KVM60 VERSAmodule Universal Intelligent Peripheral Controller, provides DMA data transfer capability, command channel software interface to onboard firmware monitor, and a relatively simple interface to external control logic.

M68KVM80-1 VERSAmodule Memory, I/O, and Time-of-Day Clock Module (without memory) provides eight 24-/28-pin sockets for up to 256Kbytes of user supplied ROM/EPROM, two multi-protocol (sync/async byte oriented or SDLC/HDLC bit oriented) RS-232C Serial I/O ports with baud rates selectable to 19.2Kbps, six 8-bit/2-hand-shake-bit I/O ports (60 lines), three 24-bit programmable counter/timers, and an interrupt requestor for I/O devices.

M68KVM80-4 VERSAmodule Memory, I/O, and Time-of-Day Clock Module same as M68KVM80-1 with 128Kbytes RAM.

VERSAmodule Packaging and Accessories

Four-Slot Chassis

M68KVMCH1-1 VERSAmodule System Chassis, 4-Slot, includes 15 A, 5 Vdc power supply with power fail recovery and ac line clock, includes 19″ rack mountable card cage and backplane, moveable bus terminators, dual cooling fans, backplane I/O connector kit with four standard VERSAbus 50-pin connectors, and removable front panel for front loading access. Chassis is stackable for expansion to three chassis (12 slots); access is provided for VERSAbus interconnect between chassis. Expansion kit M68KVMCHE is required for expanded configurations.

MVMCH1-2 Same as M68KVMCH1-1 except has 30 A, 5 Vdc power supply and includes 5-Slot I/O Module Card Cage.

M68KVMCC1 VERSAmodule 4-Slot Card Cage with backplane and bus terminator, includes card guides metal frame, and mating power connectors; stackable with up to three units. Expansion kit M68KVMCHE is required for expanded configuration.

- **M68KVMCHS** VERSAmodule 19″ Chassis Slide Mount Kit.
- **M68KVMCHD** VERSAmodule Chassis Decorative Cover Kit.
- **M68KVMCHDSS** VERSAmodule Chassis Decorative side Skins for stacked added 4-Slot Chassis.
- **M68KVMCCC** VERSAmodule Chassis Expansion Card Cage Mating Kit, consists of four 50-pin VERSAbus backplane mating connectors; may require up to four connectors per slot.
- **M68KVMCHE** VERSAmodule Chassis/Card Cage Expansion Kit, provides VERSAbus interconnect cable and all hardware to stack two M68KVMCH1-1/-2 chassis to create 8-Slot chassis; two kits are required to expand chassis to 12-slot configuration.
- **M68KVMCHU** VERSAmodule Chassis Unified Power Control Kit, provides ability to control power in two or three chassis systems from one key-lock switch.

M68KVMPM1 VERSAmodule Power Monitor Module, enables use of non-Motorola power supplies to provide ACFAIL, ACCLK, and SYSRESET signals; enables selection of 0.5, 1, or 1.5 cycles ac power drop-out and generates proper sequence of power up and power down.

M68KVMPS1A Power Supply, 228 Watt Switching Regulator provides +5 Vdc @ 30 Amps, +12 Vdc @ 2.5 Amps.

Eight-Slot Chassis

MVMCH3-1 VERSAmodule 8-Slot Chassis with 110 V, 400 watt switching power supply and power monitor module, rack mountable, four 50-pin connectors to interconnect to the VERSAbus I/O pins are also included. Includes User's Manual.

MVMCC3 VERSAmodule 8-Slot Open Frame Card Cage. Includes User's Manual.

M68KVMCHS VERSAmodule Rackmount Slides and Mounting Hardware. Includes installation instructions.

MVMCH3CVRD VERSAmodule 8-Slot Chassis decorative cover when used as a table-top unit. Includes installation instructions.

MVMCH3CHE VERSAmodule Chassis Expansion Kit that provides interconnect cable to use between two card cages. Includes installation instructions.

M68KVMPM1 VERSAmodule Power Monitor Module, enables use of non-Motorola power supplies to provide ACFAIL, ACCLK, and SYSRESET signals; enables the selection of 0.5, 1, or 1.5 cycles ac power drop-out and generates proper sequence of power up and power down.

WINTEK

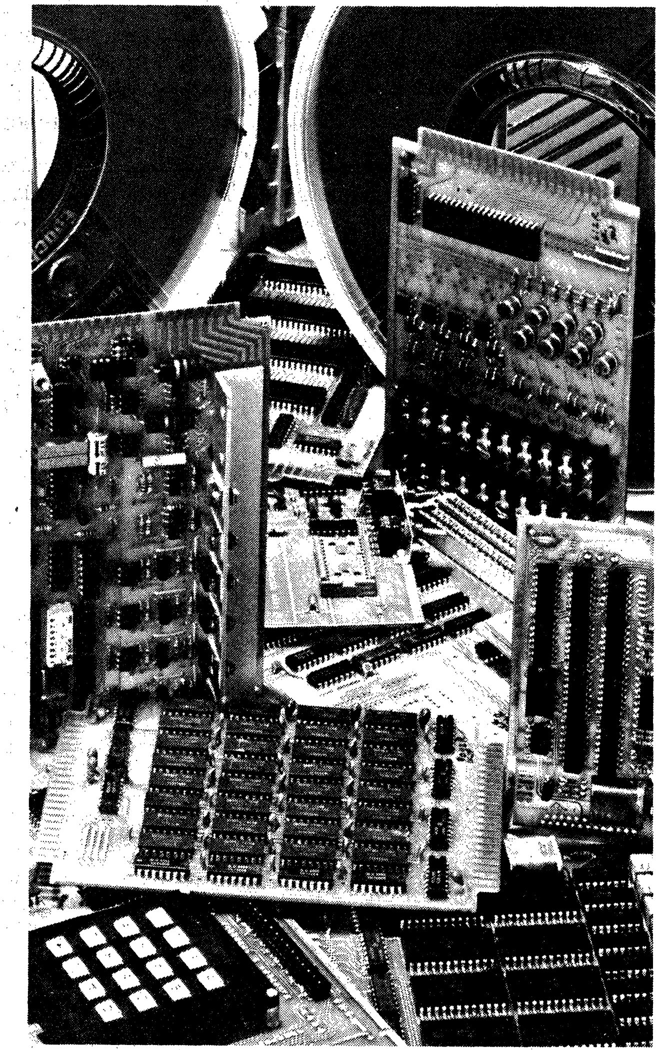

Wintek Corporation—your complete source of microcomputer hardware and software products for the 6800, 6801, 6805, and 6809 microprocessor families:

- *Micro Modules for R & D efforts and for the OEM*
- *Software Development Tools*
- *Computer-Aided-Design Software*

Items listed on this page are just a sample of Wintek's wide product line. Request a complete catalog of Wintek products and services.

WINTEK CORPORATION
1801 SOUTH STREET
LAFAYETTE, IN 47904-2993

Micro Modules

All modules are 4.5 by 6.5 inch. Unit prices are listed. Quantity discounts for micro modules are 10-24 10%, 25-49 20%, 50-99 30%, 100-499 40%, 500+ 50%. Manuals are available for $5 per module.

MCH18	6809 MPU, 2K RAM, 3 ROM sockets, 2 RS-232 serial ports, 4 parallel ports, watchdog timer, real-time clock	$285
MCH38	6809 MPU, 6K RAM, 1 ROM socket, 2 RS-232 serial ports, 4 parallel ports, watchdog timer real-time clock	$325
MCH68	6809 MPU, 24K RAM, 1 ROM socket, 2 RS-232 serial ports, 4 parallel ports, watchdog timer, real-time clock	$585
MCL10	6800 MPU, 128 bytes RAM, 1 ROM socket	$101
MCL45	6800 MPU, 0.5K RAM, 1 ROM socket, serial port, 4 parallel ports	$182
MAI04	16-channel, 12-bit A/D Converter module	$229
MAI20	2-channel, 8-bit D/A Converter module	$99
MCI11	16 button keypad with 15 7-segment displays	$199
MCS00	Cassette tape & RS-232 interface for 6800 Control Module	$109
MCT10	Counter/timer module with battery	$129
MDS08	Driver/Sensor module with 8 optically isolated inputs	$111
MDS44	Driver/Sensor module with 4 optically isolated inputs and 8 open-collector drivers	$107
MDS80	Driver/Sensor module with 16 open-collector drivers	$103
MFC04	Floppy disk controller for 4 drives	$199
MGP00	IEEE-488 Bus interface	$199
MPB00	Breadboard with parallel interface	$49
MPI08	64-line parallel I/O	$179
MRR19	Memory Expansion with sockets for 56K RAM/ROM	$139
MRR39	Memory Expansion with 30K bytes of RAM	$339
MRR49	Memory Expansion Module with memory mapping	$189
MSI08	8-port RS-232 serial interface	$249
ABP04	4 slot backplane	$50
ABP07	7 slot backplane	$86

Personal-Computer-Based Software

Develop 6800-family software on an IBM-PC or compatible. C Compilers are complete K&R implementations; Macro Assemblers are Motorola compatible. All prices listed below include a linker and terminal emulator. Complete manual set available separately for $50.

PCC00	6800 C Compiler and Macro Assembler	$895
PAS00	6800 Macro Assembler	$495
PAS01	6801 Macro Assembler	$495
PAS05	6805 Macro Assembler	$495
PCC09	6809 C Compiler and Macro Assembler	$895
PAS09	6809 Macro Assembler	$495

Cross-Software

Development tools written in ANSI FORTRAN for PDP-11, VAX, IBM, CDC, etc. computers. Request license and media forms before ordering. Complete manual set available separately for $25.

CAS00	6800/6801 Macro Cross-Assembler	$1000
CAS50	6805 Macro Cross-Assembler	$1000
CAS90	6809 Macro Cross-Assembler	$1000
CFP00	6800 Floating-Point Package	$500
CLL00	Cross-Linker	$400
CPL00	6800 PL/W Compiler	$1400
CPL90	6809 PL/W Compiler	$1400
CSM00	6800 Simulator	$800
CSM10	6801 Simulator	$800
CCC00	6800 Package—CAS00, CFP00, CLL00, CPL00 & CSM00	$3400

Computer-Aided-Design Software

smARTWORK lets you create and revise printed-circuit-board artwork on your IBM-PC. Sold with a 30-day money-back guarantee.

PSW00	smARTWORK for the IBM-PC	$895

TELEX: 70-9079 WINTEK CORP UD

TELEPHONE: (317) 742-8428 - (800) 742-6809

ALTERNATE SOURCE DIRECTORY

The Alternate Source Directory is an industry-wide cross reference of those devices which manufacturers claim are pin-for-pin and functional equivalents to IC's made by other firms. It is a compilation of many individual references and shows literally thousands of alternates that are not implied by their model numbers, especially in the linear and memory areas. Unlike the usual alternate source guides, this directory leads you to many alternate sources for any particular device, not just one. Containing over 65,000 cross references, it is the most comprehensive alternate source directory ever published.

HOW TO USE THE ALTERNATE SOURCE DIRECTORY

The second column of this Alternate Source Directory shows devices which are replacements for those in the first column. Devices listed in **BOLD FACE** type have technical data in the Master Selection Guide. This information begins on the page listed to the right of the **BOLD FACE** part numbers. Products preceded by a ◆ have been discontinued by the manufacturer. This section does include devices not listed in the Master Section Guide; e.g., discontinued items, DTL and 54L devices.

In order to maintain this list within some reasonable bounds, the A and B suffixes indicating improved versions generally have been dropped. If this were not done, for example, every higher speed selection conjured up by a memory manufacturer would result in a device that could replace many equal or slower competitors and this directory would become highly involved in slight performance variations. Moreover, improved performance is only important if your circuits take advantage of it.

One of the difficulties with any cross reference is that devices meant to be alternates do not necessarily perform the same in all circuits. Thus, it will be necessary for you to check specifications, or even check circuit performance before deciding which alternates are right for you. A major benefit of this list is that it gives you more alternatives to study. But if you do not find what you need here, it may be possible to find additional alternates by locating the device in the Master Selection Guide. Particularly for digital circuits, the other products grouped with it will normally offer similar or identical performance.

VERZEICHNIS VON AUSTAUSCHBAREN BAUELEMENTEN

Das Verzeichnis von austauschbaren Bauelementen ist eine umfassende vergleichende Äquivalenzliste für die gesamte Halbleiterindustrie. Darin sind solche Bauelemente enthalten die, nach Herstellerangaben, nach Funktionen und Pinbelegung mit Typen anderer Hersteller voll austauschbar sind. Es ist eine Zusammenfassung von vielen Einzelangaben und enthält Tausende von Äquivalenztypen, die nicht aus den Typennummern hervorgehen, besonders im Linear- und Speicherbereich. Im Gegensatz zu üblichen Äquivalenzlisten bietet dieses Verzeichnis nicht nur eine sondern veile Alternativlösungen für jedes einzelne Bauelment. Mit über 65,000 Querverweisen ist es die umfassendste Referenzliste, die je veröffentlicht wurde.

GEBRAUCHSANLEITUNG FÜR DIE ÄQUIVALENZLISTE

Die zweite Spalte dieses Verzeichnisses enthält Bauteile, welche für die in der ersten Spalte austauchbar sind. Für Bauteile in Fettdruck finden Sie technische Daten im Master Selection Guide. Diese Information beginnt auf der Seite, die rechts neben den fettgedruckten Typennummern erscheint. Produkte mit einem vorgestellten ♦ Zeichen werden nicht mehr hergestellt. Dieser Abschnitt enthält auch Bauelemente, die nicht im Master Selection Guide aufgelistet sind, z.B. nicht mehr produzierte Teile, DTL und 54L Bauelemente.

Diese Auflistung wurde aus Hersteller-Empfehlungen erstellt. Nachdem jede Firma dazu neigt, nur sich selbst als Alternative zu den bekannten Herstellern zu nennen und größere Firmen kleinere gerne ignorieren, hat nicht jedes Bauelement seine jeweilige Entsprechung Daher sollten Sie, wenn Sie nach Alternativen für ein Bauteil einer weniger bekannten Firma suchen, zunächst die entsprechenden Aquivalenztypen nachschlagen, insbesondere wenn sie von größberen Firmen sind, und damit evtl. weitere Alternativen ausfindig machen.

Um diese Liste nicht zu umfangreich werden zu lassen, wurden die A- und B-suffixe, die verbesserte Versionen bezeichnen, in der Regel Weggelassen. Wäre dies nicht geschehen, dann würde z.B. jede Selektion nach höherer Geschwindigkeit, die von einem Speicher-Hersteller durchgeführt wurde, ein Bauelement ergeben, das viele gleichschnelle oder langsamere Versionen von anderen Herstellern ersetzen könnte, und diese Vergleichsliste hätte eine Vielzahl von Bauelementen, die sich nur ganz geringfügig voneinander unterscheiden. Darüber hinaus sind bessere Parameter nur dann wichtig, wenn Sie diese in Ihrer Schaltung zu Ihrem Vorteil nutzen können.

Eine der Schwierigkeiten, die bei jeder Aquivalenzliste auftreten, ist die, daß austauschbare Bauelemente nicht unbedingt in allen Schaltungen dieselbe Funktion erfüllen. Daher sollten Sei, bevor Sei sich für einen Aquivalenztyp entscheiden, alle Datenblätter genau prüfen oder sogar feststellen, ob das betreffende Bauelement in Ihrer Schaltung richtig arbeitet.

Ein großer Vorteil dieser Liste ist, daß sie noch mehr Alternativlösungen zur Prüfung anbeitet. Aber wenn sie hier nicht das finden, was Sie suchen, können Sie möglicherweise weitere Aquivalenztypen feststellen, wenn Sie das Bauelement im Master Selection Guide nachschlagen. Insbesondere bei Digital-ICs bieten die anderen dort mitaufgeführten Produkte normalerweise ähnliche oder identische Funktionen.

LE REPERTOIRE DES SOURCES ALTERNATIVES

Ce répertoire est un outil de référence utilisé largement dans toute l'industrie. Il permet de trouver quels sont les appareils qui, d'après leurs fabricants, sont les équivalents des circuits intégrés vendus par d'autres firmes. Cet ouvrage compile un nombre considérable de références individuelles, et offre littéralement des milliers de possibilités alternatives qui ne sont pas évidentes de par les numéros de modéle des appareils, particulièrement dans le cas des mémoires et des systèmes linéaires. A la difference des autres guides du même domaine, ce répertoire n'offre pas qu'une seule et unique source alternative pour un appareil, mais au contraire plusieurs. Il contient plus de 65,000 références et représente le Répertoire des Sources Alternatives le plus complet jamais publié a ce jour.

COMMENT SE SERVIR DU REPERTOIRE DES SOURCES ALTERNATIVES

La deuxieme colonne de ce répertoire fournit une liste de produits capables de remplacer ceux énumérés dans la première colonne. Les produits écrits en gros caractères sont étudiés en detail dans le Guide Général de Sélection — se reporter à la page indiquée à la droite des numéros de pièces marqués en gras. Les produits précédés du signe (♦) ne sont plus en fabrication. Cette Section comprend des appareils qui n'apparaissent pas dans le Guide Général de Sèlection, tels que les appareils qui ont été discontinués, les DTL et les 54L.

Cette liste a été conçue en fonction des renseignements fournis par les fabricants. Il est cepedant relativement bien connu que chaque fabricant estime être le seul sur le marché à pouvoir produire des appareils équivalents à ceix des grands fournisseurs, et que, d'autre part, les gros fournisseurs ont tendance a ignorer les petits. Cet état d'esprit explique pourquoi il est impossible de fournir des équivalents de remplacement pour chacun des appareils énumérés.

Si vous recherchez des sources alternatives pour un appareil provenant d'une société qui n'ait pas une renommée mondiale, nous vous conseillons de prendre les produits de remplacement que vous pourrez trouver, notamment s'ils proviennent de fabricants bien connus, et d'ensuite consulter ce Répertoire pour trouver des sources alternatives possibles.

Afin de maintenir cette liste dans certaines limites, les suffixes A et B indiquant des versions plus puissantes ont généralement été ignorés. Cela pour éviter qu'un fabricant ayant conçu un système mémoire avec possibilitié de sélection à plus grande vitesse, se trouve en concurrence directe avec des sociétés équivalentes ou plus petites. Ce Répertoire deviendrait alors trop spécialisé dans des différences de performance minimes. D'autre part, une meilleure performance n'est importante que si vos circuits en profitent.

L'un des problèmes que l'on rencontre dans tout système de renvoi est que des appareils dits alternants ne vont pas obligatoirement avoir les mêmes performances sur tous les circuits. Il vous sera donc nécessaire avant de decider quels vont être les alternants que vous allez utiliser, de vérifier les spécifications ou même les performances du circuit. L'un des avantages de cette liste est qu'elle vous procure énormément d'appareils alternants. Au cas ou vous ne pourriez trouver dans cette Section ce dont vous avez besoin, nous vous conseillons de consulter le Guide Général de Sélection. Dans le cas des circuits digitaux, en particulier, les produits énumérés dans chaque groupe offrent généralement des performances similaires ou identiques.

DIRECTORIO DE FUENTES ALTERNAS

El Directorio de Fuentes Alternas es una referencia entre componentes usado ampliamente en la industria en la cual los fabricantes mantienen que provee estilo constructivo de terminales en los circuitos Integrados (IC) fabricados por otras compañías. Es una compilación de muchas referencias individuales y muestra literalmente miles de equivalentes alternas que no son obvias por su número de modelo, especialmente en las areas de lineal y memoria. En vez de las guías de fuentes, el alterno usual, este directorio los refiere a muchas fuentes alternas para cualquier componente, no solamente una. Con un contenido de 65,000 referencias de componente-a-componente es el directorio publicado más completo.

MODO DE EMPLEO DEL DIRECTORIO DE FUENTES ALTERNAS

La segunda columna de este Directorio de Fuentes Alternas muestra componentes que pueden reemplazar a los de la primera columna. Componentes que aparecen con letras oscuras tienen especificaciones técnicas en la Guía Maestra de Selección. Esta información empieza en las página que aparece a la derecha sel número de la parte en letras oscuras. Los productos acompañados por un (♦) han sido descontinuados por el fabricante. Esta sección si incluye componentes que no aparecen en la Guía Maestra de la sección; en otras palabras, artículos descontinuados, DTL y 54L.

Esta lista ha sido compilada por medio de recomendaciones de los fabricantes. Debido a que hay una tendencia a que cada compañía se muestre así misma como alterna a los fabricantes más prominentes, y que los fabricantes mayores ignoren a los mas pequeños, no cada componente hace referencia de uno a otro; de tal manera que, si usted busca alternos para una compañía menos conocida, obtenga los substitutos que encuentre, más que nada si son producto de compañías prominentes, y luego refiérase a ellos para encontrar otras fuentes.

Con objeto de mantener esta lista bajo un control razonable, los sufijos A y B que denotan mejoras, no aparecen. Si esto no se hubiese hecho, por ejemplo, cada selección de memorias de alta velocidad resultaría en una componente que podría substituir otras de igual velocidad o más lentas y este directorio terminaría dando mucha importncia a cambios insignificantes en el funcionamiento de ellos. Además, una mejora en las características solo es importante si sus circuitos lo requieren.

Una de las dificultades con cualquier referencia es que componentes que tienen como propósito ser equavalentes no necesariamente tienen el mismo rendimiento en todos los circuitos. Debido a esto, será necesario que usted determine las especificaciones, o inclusive determine las características del circuito antes de decidir que equivalente es mejor para usted. Un beneficio de esta lista es que le provee alternativas que investigar. Pero si no encuentra lo que necesita aquí, es aún posible encontrar equivalentes encontrando la componente en las Guía Maestra de Selección. En particular para circuitos digitales, los otros productos agrupados con aquel, le ofrecerá un funcionamiento igual o parecido.

代替ソース ダイレクトリー

このダイレクトリーはメーカーが他とピンコンパチブルか機能的に互換性があるという製品の全業界のクロスリファレンスです。これは個々のリファレンスを多数を編集したものであり，文字通り数千の型名からは全く分らない特にリニアとかメモリといった分野で数千の代替品を記載しています。

通常の代替品がガイドと異り，このダイレクトリーは特定品種について一社丈でなく数社の代替品を記載しています。65,000のクロスリファレンスがありこれ程広くカバーしたクロスリファレンスは本書が初めてです。

使用法

第二欄は第一欄の代替品を示しています。太字で印刷されている製品はマスターセレクションガイドにデータがのっている事を示します。そのページは太字印刷の型名の右側に書いてあります。◆印が前についている製品はメーカーが生産中止した事を示します。このセクションにはマスターセレクションガイドにのっていない，生産中止した製品例えばＤＴＬとか５４製品とかも記載しています。このリストはメーカーの推せんに従って作られたものです。各メーカーにある傾向ですが自社丈が本当の代替ソースと主張したり大手は中小メーカーを無視したりするので全ての製品が互い互いに全製品にクロスリファレンスされてはいない。ですからもし利用者皆様が小さなメーカーの代替品を探す時は皆様が先ず代替品を見つけ，大手メーカーがそれを作っていればそこを調べて代替メーカを探し当てる方法をとった方が良いでしょう。

このリストをある納得されうる限界にしておく為に改良品につけられるＡとかＢとか云ったサフィックスは通常つけてありません。もしつけてあるとメモリーメーカーが主張する高速セレクションが同等かスピードの遅い製品メーカーの製品を数多く取換えてしまう結果にもなるでしょうし，このダイレクトリーが少々の性能の違いに相当の比重をかけなくてはならないようになってしまいます。更に云えば改良性能はそれを充分に利用する回路丈にしか必要ないのです。

クロスリファレンスを作る難しさの一つは代替とされる製品が応々にして全ての回路で同性能でないと云うことです。この為利用者皆様は性能表を調査するか決定する前にどの代替が回路に合うかを回路で調査されることをおすすめします。このリストの良いところは皆様に多くの代替ソースがあることを知って頂く事です。もし皆様がこのセクションで見つけられなかった場合は，マスターセレクションガイドからも見つけることが出来ます。特にディジタル回路はグループ毎の他社製品は通常似かよったあるいは同一の性能を持っています。

Advanced Micro Devices

Manufacturer Device	Replacement Source	Device	IC Master Page
27521	AMD	AM27S11	
		AM27S21	
	Fujitsu	MB7114	
	MMI	6301-1	
		63S141	**4101,4102**
	National	DM74S287	
	Signetics	**N82S129**	**4166**
	TI	**TBP24S10**	**729**
27PS181	Raytheon	29633	
	Signetics	82PS181	
	TI	28P86	
27PS185	Raytheon	29653	
27PS191	MMI	53PS1681	
		63PS1681	
	Raytheon	**29683**	**4134**
	TI	28P166	
27S185	AMD	AM27S185	
	Fujitsu	MB7128	
	Hitachi	HN25085	
	MMI	5389	
		6389	**4102**
		6389-1	
		63S841	**4101,4102**
	Motorola	**MCM7685**	**4124**
	National	77S185	
		87S185	
		DM87S185	
	Raytheon	29651	
		29651A	**4134**
	Signetics	82S185	
		N82HS185	
		N82S185	**4166**
	TI	24S81	
		TBP24S81	
27S191	AMD	AM27S191	
	Fairchild	932511	
	Fujitsu	MB7138	
	Harris	76161	
		HM76161	
	Hitachi	HN25169	
	MMI	**63S1681**	**4101,4103**
	Motorola	MCM76101	
	National	77S191	
		87S191	
		DM87S191	
	Raytheon	**29681**	**4134**
	Signetics	82S191	
		N82S191	**4167**
	TI	28S166	
		TBP28S166	
27S29	AMD	LF157A	
	Fairchild	LF157A	
	Harris	7649	
	MMI	5349-1	
		6349-1	
	National	545472	
		74S472	
		LF157A	
	PMI	PM157A	
	Raytheon	**29621**	**4134**
	Signetics	825147	
	TI	28S42	
27S43	AMD	AM27S43	
	Fujitsu	MB7142	
	MMI	**53S3281**	**691,4101**
		63S3281	**4101,4103**
	National	77S321	
		87S321	
		DM87S321	
	Raytheon	**29671**	**4134**
	Signetics	82S321	
		N82S321	**4167**
27S49	AMD	AM27S49	
	Cypress	CY7C264	
	Fairchild	32Z565	
		93565	
	Fujitsu	7144H	
		MB7144	
	Harris	76641	
	Raytheon	**29VP864**	**4137**
	Signetics	82641	
715	Fairchild	μA715	
◆723	Fairchild	μA723	
	Hitachi	HA17723	
	Intersil	LM723	
	Motorola	**MC1723**	**3625**
	National	LM723	
	Raytheon	RC723	
		(Continued)	
◆723	Raytheon	RM723	
	RCA	CA723	
		LM723	
	SGS	L123	
		LM723	
	Signetics	**μA723**	**3721,3730**
	SiliconG	SG723	
	TI	μA723	
	ThomsonCSF	LM723	
◆733	Fairchild	μA733	
	Hitachi	HA17733	
	Intersil	μA733	
	Motorola	**MC1733**	**3616**
		NE592	
	National	LM733	
	Signetics	**μA733**	**3721,3729**
	TI	μA733	
747	Fairchild	μA747	
	Hitachi	HA17747	
	MicroPwr	MPOP04	
	Motorola	**MC1747**	**3617**
	National	LM747	
	NEC	μPC251	
	PMI	**OP-04**	**3636**
		PM747	
	Raytheon	RC747	
		RM747	
	RCA	**CA747**	**3672**
	Signetics	**μA747**	**3721**
	TeledyneS	747	
	TI	μA747	
74LS533	SPI	SP74HCT533	
74LS563	SPI	SP74HCT563	
80186	Fujitsu	80186	
	Intel	80186	
	IMI	IMI6080	
	Siemens	80186	
80188	Fujitsu	80188	
	Intel	80188	
	Siemens	80188	
8035	Intel	8035	
	National	INS8035	
	NEC	μPD8035	
	Signetics	SCN8035	
	Toshiba	**TMP8035**	**1750**
8041	Intel	8041A	
	NEC	μPD8041A	
8048	Intel	8048	
	National	INS8048	
	NEC	μPD8048	
	Signetics	SCN8048	
	Toshiba	**TMP8048**	**1750**
8085	AMD	8085A	
	Intel	8085	
		8085A	
	NEC	μPD8085	
	Toshiba	**TMP8085A**	**1750**
8085A	AMD	8085	
	Intel	8085	
		8085A	
	NEC	μPD8085	
	Toshiba	**TMP8085A**	**1750**
8088	**Fujitsu**	**MBL8088**	**1611**
	Intel	8088	
8155	Harris	HS81C55	
	Intel	8155	
	NEC	μPD8155	
	Toshiba	**TMP8155**	**1750**
8156	Harris	HS81C56	
	Intel	8156	
	NEC	μPD8156	
◆8216	Intel	8216	
	National	DP8216	
		INS8216	
	NEC	μPB8216	
8224	Intel	8224	
	National	DP8224	
		INS8224	
◆8226	Intel	8226	
	Mitsubishi	M5L8226	
	National	DP8226	
		INS8226	
	NEC	μPB8226	
8228	Intel	8228	
	National	DP8228	
		INS8228	
	NEC	μPB8228	
	TI	SN74S428	
		TIM8228	
8251	Intel	P8251	
	NEC	UPD8251A/AF	
	OKI	**MSM82C51A**	**4732**
		(Continued)	
8251	S-MOS	SMC82C51AC	
	Toshiba	TMP8251	
8253	Intel	8253	
	National	INS8253	
	NEC	UPD8253-2/-5	
	Toshiba	TMP8253	
8257	Intel	8257	
	NEC	UPD8257-2/-5	
8279-5	Intel	8279	
	NEC	μPD8279-5	
8284	Fujitsu	MBL8284	
	Harris	82C84	
		82C84A	**682,1619,1623,1631**
	Intel	8284	
		82C84	
		82C84A	
	NEC	UPD71084	
		μPB8284	
	Nitron	NC82C84A	
8287	**Harris**	**82C87**	**1619,1622**
	Intel	8287	
		82C87	
	NEC	UPS71087	
		μPD8287	
	Nitron	NC82C87	
	OKI	82C87	
8288	**Fujitsu**	**MBL8288**	**1611**
	Harris	**82C88**	**682,1619,1623,1631**
	Intel	8288	
		82C88	
	NEC	UPD71088	
		μPB8288	
	Nitron	NC82C88	
	OKI	82C88	
8304	AMD	DP8304	
	Fujitsu	**MBL8286**	**1611**
	Harris	**82C86**	**1619,1622**
	Intel	8286	
		82C86	
	National	DP8304	
	NEC	μPB8286	
		μPD71086	
	Nitron	NC82C86	
	OKI	82C86	
9240	GI	R09508	
9264	GI	R03-9364	
	GouldAMI	S68A364	
	Hitachi	HN48364	
	Intech	IM7364	
	MicroPwr	MP2364C	
	Mitsubishi	M58334	
	Mostek	MK36000	
	Motorola	**MCM68364**	**4120**
		MCM68365	**4120**
		MCM68366	**4120**
	National	MM52164	
	NEC	UPD2364	
	Rockwell	R2364A	
	SGS	M2362	
		M36000	
	Signetics	2664	
		26S64	
	SSS	SCM23C64	
	SMC	ROM36000	
	Synertek	SY2364/A	
	TI	TMS4764	
	Toshiba	TMM2366	
9280	GI	R09580	
AM1002	Mostek	MK1002	
AM100415	**Fairchild**	**F100415**	**4014**
	Signetics	100415	
AM100470	Fujitsu	MBM100470A	
	NEC	UPB100470	
	Signetics	100470	
		GBX100470	
AM100474	Fairchild	F100474	
	Fujitsu	MBM100474	
		MBM100474A	
	Hitachi	100474	
		HM100474	
	NEC	UPB100474	
	Signetics	100474	
AM100480	Fairchild	F100480	
	Fujitsu	MBM100480	
	Hitachi	HM100480	
	NEC	UPB100480	
AM100484	Fairchild	F100484	
	Fujitsu	MBM100484	
	Hitachi	HM100484	
AM10415	**Fairchild**	**F10415**	**4014**
	Fujitsu	MBM100470A	
		MBM10415	
	Hitachi	HM2110	
		HM2112	
	Motorola	**MCM10146**	**4123**
	National	DM10415	
	Siemens	GXB10415	
	Signetics	10415	
AM10470	Fujitsu	MBM10470A	
	Hitachi	HM10470	
		HM2142	
	Motorola	MCM10470	
	National	DM10470	
	NEC	UPB10470	
	Signetics	10470	
AM10474	Fairchild	F10474	
	Fujitsu	MBM10474A	
	Hitachi	HM10474	
	Motorola	**MCM10474**	**4123**
	National	DM10474	
	NEC	UPB10474	
	Signetics	10474	
AM10480	Fairchild	F10480	
	Fujitsu	**MBM10480**	**4021**
	Hitachi	HM10480	
	NEC	UPB10480	
AM1408	AMD	DAC-08	
		SSS1408	
	AD	AD1408	
		ADDAC-08	
	Datel	DAC-08B	
		DAC-I8BC	
		DAC-IC8B	
		DAC-IC8BC	**3162**
	Fairchild	DAC-08	
		MA0802M	
		μA0801	
		μA0802	
	Hitachi	HA17408	
	Motorola	**DAC-08**	**3630**
		MC1408	
	National	DAC0801	
		DAC0802	
		DAC0806	
		DAC0807	
		DAC0808	
	NEC	μPC624	
	PMI	**DAC-08**	**3637,3639**
		DAC-1408	
	Raytheon	**DAC-08**	**3664**
	Signetics	MC1408	
◆AM1508	AD	AD1508	
	Datel	DAC-IC8BM	
	Motorola	MC1508	
	National	MC1508	
	PMI	DAC-1508	
	Signetics	MC1508	
		SE5008	
		SE5009	
AM1702A	National	MM1702	
AM2147	Cypress	CY7C147	
	Hitachi	HM6147H	
	Intel	2147H	
	Motorola	MCM6147	
	National	NMC2147H	
	NEC	μPD2147A	
AM2148	AMD	AM2149	
	Cypress	CY2148	
		CY2149	
		CY7C148	
		CY7C149	
	Intel	2148H	
		2149H	
	National	NMC2148	
	NEC	UPD2149	
	ThomsonCSF	ET2148	
	UMC	UM2148	
		UM2149	
AM2149	AMD	AM2148	
	Cypress	CY2148	
		CY2149	
		CY7C148	
		CY7C149	
	Intel	2148H	
		2149H	
	National	NMC2148	
	NEC	UPD2149	
	ThomsonCSF	ET2148	
	UMC	UM2148	
		UM2149	

◆ Discontinued

Bold face device numbers indicate manufacturers data is provided in the IC Master on the pages noted.

Advanced Micro Devices (Cont'd)

Manufacturer Device	Replacement Source	Device	IC Master Page
AM2167	Cypress	CY7C167	
	Fujitsu	MB8167A	
		MB81C67	
	Harris	HM65262	
	Hitachi	HM6167	
		HM6167H	
		HM6267	
	Inmos	IMS1400	
		IMS1403	**4042**
	IDT	IDT6167	
	Intel	51C67	
	Mitsubishi	M5M2167	
	Motorola	MCM2167H	
	NEC	UPD2167	
AM2168	AMD	AM99C68	
	Cypress	CY7C168	
	Fujitsu	MB8168	
	Hitachi	HM6168	
	Inmos	IMS1420	
		IMS1421	
		IMS1423	
	IDT	IDT6168	
	Mitsubishi	M5M2168	
	Motorola	MCM6168	
	TI	TMS2168	
AM21L48	Cypress	CY21L48	
		CY7C148	
AM21L49	AMD	AM27S25	
	Cypress	CY7C225	
	Fujitsu	MB7226	
	MMI	**53RA481**	**4101**
		63RA481	**4101**
	Motorola	MCM27S25	
	National	DM87SR25	
		DM87SR474	
AM2504	Siliconix	SI25HC04	
AM25L02	SPI	SP74HCT502	
AM25L03	SPI	SP74HCT503	
AM25L04	SPI	SP74HCT504	
AM25LS2521	TI	SN74LS688	
AM25S10	TI	SN74S350	
AM25S557	AMD	AM25S558	
	Fairchild	74F558	
	LogicDev	LMU558	
	MMI	74S558	
		SN54558	
		SN74558	
AM25S558	AMD	AM25S557	
	Fairchild	74F558	
	LogicDev	LMU558	
	MMI	74S558	
		SN54558	
		SN74558	
AM25S558M	MMI	54S558	
AM26LS31	**Motorola**	**AM26LS31**	**3211,3212**
	National	DS26LS31	
	TI	**AM26LS31**	**722**
AM26LS33	TI	AM26LS33A	
AM26S10	Motorola	DC26S10	
	National	DS26S10	
	TI	AM26S10	
AM26S11	National	DS26S11	
	TI	AM26S11	
AM27128	Fujitsu	MBM27128	
	Hitachi	HM4827128	
	Intel	27128	
		27128A	**4074**
	Mitsubishi	M5L27128	
		M5L27C128	
	NEC	µPD27128	
	SEEQ	27128	
	SGS	M27128	
	TI	**TMS27C128**	**4210**
	Toshiba	TMM27128	
◆AM2716	Hitachi	HN462716	
	National	MM2716	
	OKI	MSM2716	
	SGS	M2716	
	ThomsonCSF	ET2716	
AM27256	Fujitsu	MBM27256	
		MBM27C256	
	GI	R09256	
	Hitachi	HM4827256	
		HN27256	
		HN27C256	**4037**
	Intel	27256	
		27C256	**4079**
	Mitsubishi	M5L27256	
AM27256	Mitsubishi	MSL27256	
	Motorola	MCM67256	
	National	NMC27C256	
	NEC	MPD27256	
		UPD27256	
		UPD27C256	
		UPD27C256A	
	SEEQ	27256	
		27C256	
	SGS	M27256	
	SSS	SCM27C128	
	Toshiba	TC57256	
		TMM27256	
		TMM27C256	
	VTI	**VT27C256**	**4265,4273**
AM2732	Hitachi	HN462732	
	Intel	2732	
		2732A	
		M2732	
	National	MM2732	
		NMC2732	
	Rockwell	R27C32	
	SGS	M2732A	
	Toshiba	TMM324C	
AM27512	Fujitsu	MBM27512	
		MBM27C512	
	Hitachi	HN27512	
	Intel	**27512**	**4076**
	Mitsubishi	M5L27512	
	NEC	MPD27C512	
	Toshiba	**TMM27512**	**4263**
AM27540	Fujitsu	MB7133	
AM27541	AMD	AM27S41	
	Fujitsu	MB7134	
		MB7152	
	MMI	**53S1641**	**4101**
		63S1641	**4101,4103**
	Motorola	**MCM76161**	**4124**
	National	DM77S195	
		DM87S195	
	Signetics	NS82HS195	
		NS82S195	
AM2764	Fujitsu	MBM2764	
		MBM27C64	
	Hitachi	HM482764	
		HN2764	
		HN27C64	
		HN482764	
	Intel	2764	
		2764A	
		27C64	**4078**
		87C64	**4078**
	Mitsubishi	M5L2764	
	NEC	UPD2764	
		UPD27C64	
	OKI	MSM2764	
		MSM2764A	**4732**
		MSM27C64	
	Rockwell	R2764	
		R27C64	
		R87C64	
	S-MOS	SPM27C64	
	SEEQ	2764	
		5133	
	SGS	M2764	
	Signetics	27C64	
	SSS	SCM27C64	
	TI	TMS27C64	
	ThomsonCSF	ET2764	
	Toshiba	**TMM2764**	**4263**
AM27C1024	Fujitsu	MBM27C1024	
	NEC	MPD27C1000	
AM27LS03	AMD	AM27S03	
		SN74S189	
	Cypress	CY27S03	
		CY74S189	
		CY7C189	
		CY7CS189	
	Fairchild	74S189	
		93405	
	National	DM74S189	
		DM7599	
		DM8599	
	TI	SN74S189B	
AM27LS18	MMI	5330-1	
		53LS080	
		63LS080	
	National	DM54S188	
		DM7577	
	Signetics	S82S23	
AM27LS19	AMD	AM27S19	
	Fujitsu	MB7112	
	MMI	5331-1	
		53S081	**4101**
		6331-1	
		63S081	**4101,4102**
	Motorola	MCM27S19	
	National	DM74S288	
		DM8578	
	Signetics	**N82S123**	**4166**
		S82S123	
	TI	**TBP18S030**	**729**
AM27S03	AMD	AM27LS03	
		SN74S189	
	Cypress	CY27S03	
		CY74S189	
		CY7C189	
		CY7CS189	
	Fairchild	74S189	
		93405	
	National	DM74S189	
		DM7599	
		DM8599	
	TI	SN74S189B	
AM27S07	Cypress	CY27S07	
		CY7C190	
AM27S11	AMD	27521	
		AM27S21	
	Fujitsu	MB7114	
	MMI	6301-1	
		63S141	**4101,4102**
	National	DM74S287	
	Signetics	**N82S129**	**4166**
	TI	**TBP24S10**	**729**
AM27S12	Fujitsu	MB7115	
	MMI	6305-1	
		63S240	**4101,4102**
	National	DM74S570	
	Signetics	**N82S130**	**4166**
AM27S13	Fujitsu	MB7116	
	Harris	HM7621	
	MMI	6306-1	
		63S241	**4101,4102**
	Motorola	**MCM7621**	**4124**
	National	DM74S571	
	Signetics	**N82S131**	**4166**
AM27S15	**Signetics**	**N82S115**	**4166**
AM27S18	Fujitsu	MB7111	
	Harris	HM7602	
	MMI	**6330**	**4102**
	National	DM74S188	
	Signetics	**N82S23**	**4166**
	TI	TBP18SA30	
AM27S180	Fujitsu	MB7131	
	MMI	6380-1	
	National	DM87S180	
		DM87S229	
	Signetics	N82S180	
	TI	TBP28SA86A	
AM27S181M	Cypress	CY7C282M	
	Fairchild	932451	
		93451	
	Fujitsu	MB7132	
	Harris	7681	
	Hitachi	HN25089	
	MMI	5381-1	
		6381	**4102**
		6381-1	
	Motorola	**MCM7681**	**4124**
	National	DM77S181	
		DM77S281	
		DM87S281	
	Raytheon	29631AM	
		29632	
	Signetics	82S181	
		NS82HS195	
		S82HS181	
		S82S181	
	TI	28S86	
		TBP28S86AM	
AM27S184	Fujitsu	MB7127	
	Hitachi	HM25045	
	MMI	6388	
		6388-1	
	National	DM87S184	
	Signetics	N82S184	
	TI	TBP24SA81	
AM27S185	AMD	27S185	
	Fujitsu	MB7128	
	Hitachi	HN25085	
	MMI	5389	
		6389	**4102**
AM27S185	MMI	6389-1	
		63S841	**4101,4102**
	Motorola	**MCM7685**	**4124**
	National	77S185	
		87S185	
		DM87S185	
	Raytheon	29651	
		29651A	**4134**
	Signetics	82S185	
		N82HS185	
		N82S185	**4166**
	TI	24S81	
		TBP24S81	
AM27S19	AMD	AM27LS19	
	Fujitsu	MB7112	
	MMI	5331-1	
		53S081	**4101**
		6331-1	
		63S081	**4101,4102**
	Motorola	MCM27S19	
	National	DM74S288	
		DM8578	
	Signetics	**N82S123**	**4166**
		S82S123	
	TI	**TBP18S030**	**729**
AM27S190	Fairchild	937510	
	Fujitsu	MB7137	
	Hitachi	HN25168	
	National	DM77S190	
		DM87S190	
	Signetics	S82S190	
	TI	TBP28SA166	
AM27S191	AMD	27S191	
	Fairchild	932511	
	Fujitsu	MB7138	
	Harris	76161	
		HM76161	
	Hitachi	HN25169	
	MMI	**63S1681**	**4101,4103**
	Motorola	MCM76101	
	National	77S191	
		87S191	
		DM87S191	
	Raytheon	**29681**	**4134**
	Signetics	82S191	
		N82S191	**4167**
	TI	28S166	
		TBP28S166	
AM27S20	Fujitsu	MB7113	
	MMI	6300-1	
		63S140	**4101,4102**
	National	DM74S387	
	Signetics	**N82S126**	**4166**
	TI	TBP24SA10	
AM27S21	AMD	27521	
		AM27S11	
	Fujitsu	MB7114	
	MMI	6301-1	
		63S141	**4101,4102**
	National	DM74S287	
	Signetics	**N82S129**	**4166**
	TI	**TBP24S10**	**729**
AM27S25	AMD	AM21L49	
	Cypress	CY7C225	
	Fujitsu	MB7226	
	MMI	**53RA481**	**4101**
		63RA481	**4101**
	Motorola	MCM27S25	
	National	DM87SR25	
		DM87SR474	
AM27S28	Fujitsu	MB7123	
	MMI	6348-1	
	National	DM74S473	
	Signetics	N82S146	
	TI	TBP28SA42	
AM27S29	Fujitsu	MB7124	
	MMI	6349-2	
	National	DM54S472	
		DM74S472	
	Raytheon	**29623**	**4134**
	Signetics	N82S147	
AM27S291	AMD	AM27S191	
	Fairchild	932511	
	Fujitsu	MB7138H	
	Harris	HM76161	
	MMI	63S181	
	Motorola	MCM76	
	National	DM878291	
	NEC	µPB429	
	Raytheon	**29683A**	**4134**

(Continued)

◆ Discontinued

The manufacturers report their devices can be used as direct replacements.
Performance details often differ, so compare the specifications considering your requirements.

Advanced Micro Devices (Cont'd)

Manufacturer Device	Replacement Source	Device	IC Master Page
AM27S30	MMI	6340-1	
	National	DM74S475	
		DM77S475	
		DM87S475	
	Signetics	N82S140	
	TI	TBP28SA46	
AM27S31	MMI	6341-1	
	Motorola	**MCM7641**	**4124**
	National	DM74S474	
	Signetics	N82S141	
	TI	TBP28S46	
AM27S32	Fairchild	93452	
	Fujitsu	MB7121	
	Hitachi	HN25044	
	MMI	5352-1	
		6352	**4102**
	National	DM54S572	
	Signetics	S82S136	
	TI	TBP24SA41M	
AM27S33	Fairchild	93453	
	Fujitsu	MB7122	
	Hitachi	HN25045	
	MMI	5353-1	
		535441	
		6353-1	
		63S441	**4101,4102**
		G35441	
	Motorola	**MCM7643**	**4124**
	National	DM74S573	
	NEC	UPB426	
	Signetics	N72HS137	
		N825137	
		N82S137	**4166**
		S82S195	
	TI	TBP24S41	
AM27S33M	**MMI**	**53S441**	**4101**
	Motorola	MCM7643M	
	National	DM54S573	
		DM54S573A	
	Signetics	S82HS137	
		S82S137	
		S82S195	
	TI	TBP24S41M	
AM27S35	AMD	AM27S37	
	Cypress	CY7C235	
	Fujitsu	MB7232	
	MMI	53RA881	
		63RA881	
		63RS881	**4101,4103**
	Motorola	MCM27S35	
	National	DM87SR181	
AM27S37	AMD	AM27S35	
	Cypress	CY7C235	
	Fujitsu	MB7232	
	MMI	53RA881	
		63RA881	
		63RS881	**4101,4103**
	Motorola	MCM27S35	
	National	DM87SR181	
AM27S40	Fujitsu	MB7151	
AM27S41	AMD	AM27541	
	Fujitsu	MB7134	
		MB7152	
	MMI	**53S1641**	**4101**
		63S1641	**4101,4103**
	Motorola	**MCM76161**	**4124**
	National	DM77S195	
		DM87S195	
	Signetics	NS82HS195	
		NS82S195	
AM27S43	AMD	27S43	
	Fujitsu	MB7142	
	MMI	**53S3281**	**691,4101**
		63S3281	**4101,4103**
	National	77S321	
		87S321	
		DM87S321	
	Raytheon	**29671**	**4134**
	Signetics	82S321	
		N82S321	**4167**
AM27S45	AMD	AM27S47	
	Cypress	CY7C245	
	MMI	**63RA1681**	**4101,4103,4107**
AM27S47	AMD	AM27S45	
	Cypress	CY7C245	
	MMI	**63RA1681**	**4101,4103,4107**
AM27S49	AMD	27S49	
	Cypress	CY7C264	
	Fairchild	32Z565	
		93565	
	Fujitsu	7144H	
		MB7144	
	Harris	76641	
	Raytheon	**29VP864**	**4137**
	Signetics	82641	
AM27S85	**MMI**	**53DA1643**	**4101**
		63D1641	**4101,4103,4109**
		63DA1643	**4101,4103**
AM2812	Plessey	MP3812	
AM2813	Plessey	MJ2813	
AM2833	Micrel	MIC2533	
AM2841	Fairchild	3341A	
	Plessey	MJ2841	
AM2847	Fairchild	F2847	
AM2864B	AMD	AM9864	
	EXEL	XL2864A	
		XLS2864A	
	Fujitsu	UBM28C64	
	Hitachi	HN58064	
	SEEQ	2864	
	Xicor	**X2864A**	**734,4280**
AM28LS32	National	DS26LS32	
	TI	AM26LS32A	
AM2901	Cypress	CY2901	
AM2902	ThomsonCSF	SFC2902	
AM2903	ThomsonCSF	SFC2903	
AM2909	Cypress	CY2909	
		CY7C909	
AM2911	Cypress	CY2911	
		CY7C911	
AM2914	ThomsonCSF	SFC2914	
AM2915	ThomsonCSF	SFC2915	
AM2917	ThomsonCSF	SFC2917	
AM2918	ThomsonCSF	SFC2918	
AM2919	ThomsonCSF	SFC2919	
AM29510	AMD	AMD29510	
		AMD29L510	
	AD	ADSP1010	
		ADSP1010A	
	Cypress	CY7C510	
	IDT	**IDT7210**	**1084,1088**
	LogicDev	LMA1010	
	MicroPwr	**MP1010**	**688**
	TI	74HCT9510	
		SN74HCT9510	
	TRW-LSI	TDC1010	
		TDC2010	
		TMC2010	
		TMC2110	
	Weitek	WTL1010	
		WTL2010	
		WTL2044	
		WTL2245	
AM29516	AMD	AM29C516	
	AD	ADSP1016	
	Cypress	CY7C516	
	IDT	**IDT7216**	**1086,1088**
	LogicDev	LMU16	
	TRW-LSI	MPY016H	
		MPY016K	
		MPY16HJ	
	Weitek	WTL1016	
		WTL1516	
		WTL2516	
AM29517	AMD	AM29C517	
	Cypress	CY7C517	
	IDT	**IDT7217**	**1086,1088**
	LogicDev	LMU17	
	Weitek	WTL1517	
		WTL2517	
		WTL9517	
AM29520	LogicDev	L29C520	
		L29CS20	
AM29521	LogicDev	L29C521	
AM2960	**Signetics**	**2960**	**3221**
AM2965M	MMI	54S730	
AM2966M	MMI	54S734	
AM2968	Motorola	MC74F2968	
AM2969	Motorola	MC74F2969	
AM2970	Motorola	MC74F2970	
AM29821	TI	SN74AS821	
AM29822	TI	SN74AS822	
AM29823	TI	SN74AS823	
AM29824	TI	SN74AS824	
AM29825	TI	SN74AS825	
AM29826	TI	SN74AS826	
AM29827	TI	SN74AS827	
AM29841	TI	SN74AS841	
AM29843	TI	SN74AS843	
AM29844	TI	SN74AS844	
AM29845	TI	SN74AS845	
AM29846	TI	SN74AS846	
AM29C101	LogicDev	L429C01	
AM29C516	AMD	AM29516	
	AD	ADSP1016	
	Cypress	CY7C516	
	IDT	**IDT7216**	**1086,1088**
	LogicDev	LMU16	
	TRW-LSI	MPY016H	
		MPY016K	
		MPY16HJ	
	Weitek	WTL1016	
		WTL1516	
		WTL2516	
AM29C517	AMD	AM29517	
	Cypress	CY7C517	
	IDT	**IDT7217**	**1086,1088**
	LogicDev	LMU17	
	Weitek	WTL1517	
		WTL2517	
		WTL9517	
◆AM592	Fairchild	μA733	
	Hitachi	HA17733	
	Intersil	μA733	
	Motorola	**MC1733**	**3616**
		NE592	
	National	LM733	
	Signetics	**μA733**	**3721,3729**
	TI	μA733	
AM6080	**Signetics**	**SE5019**	**3720**
		SE5118	**3725**
		SE5119	**3725**
AM6081	Datel	DAC-UP8B	
	Signetics	**NE5018**	**3690,3720,3725**
		NE5019	**3725**
		NE5118	**3725**
		NE5119	**3725**
AM6108	Motorola	MC6108	
◆AM6420	Burr-Brown	SHC5320	
	Datel	SHM-20	
	Harris	HA-5320	
	TeledyneP	4866	
AM8237A	AMD	AM9517A-4	
	Harris	82C37A	
	Intel	8237A-4	
	Nitron	NC72C37A	
AM9044	National	NMC5257A	
◆AM9102	Fairchild	2102H	
	National	MM2102A	
	Panasonic	MN2102	
AM9114	Fairchild	F2114	
	Hitachi	HM472114	
	Intel	2114	
		2114A	
	Mitsubishi	M5L2114	
	Motorola	M5L2114	
		MCM2114	
		MCM21L14	
	National	NMC2114A	
	OKI	MSM2114	
	SSS	SCM2114A	
		SCM21C14	
	Synertek	SY2114	
	Toshiba	TMM2114A	
		TMM314A	
	UMC	UM2114	
AM9122	Cypress	CY7C122	
		CY9122	
AM9128	AMD	AM9218	
	Cypress	CY7C128	
	Fujitsu	MB8128	
		MB8416	
	Harris	HM6116	
		HM6516	
	IDT	IDT6116	
	Intel	2128	
	MicroPwr	MP6116	
	Mitsubishi	M58275	
		M5M116	
		M5M5116	
		M5M5117	
		M5M5118	
		MS8725	
			(Continued)
AM9128	Motorola	MCM2016	
		MCM2016H	
		MCM2128	
		MCM6116	**4119**
		MCM61L16	**4119**
		MCM65116	
	National	MMC2116	
	NEC	μPD4016	
	OKI	MSM2128	
		MSM5128	**4732,4733**
	RCA	MWS6116A	
	SSS	883C21C16	
		BCM21C16	
		SCM21C16	
		SCM6116	
	TI	TMS4016	
	ThomsonCSF	ET2128	
	Toshiba	**TC5516A**	**4263**
		TMM2015A	
		TMM2016	
		TMM2016A	**4263**
	Samsung	KM6816	
	UMC	UM2128	
	Universal	US574HC133	
AM9150	Cypress	CY7C150	
		CY9150	
AM91L22	Cypress	CY7C122	
AM92128	GI	R09128	
		SPR-128	
	GouldAMI	S23128	
		S3630A	
	GTEMicro	G53128	
	Hitachi	HN613128	
		HN613128P	
	Mitsubishi	M5M23128	
	Motorola	MCM63128	
	NCR	NCR23128	
	NEC	UPD23128	
		UPD23128A	
		UPD23128E	
		UPD23C128	
		UPD23C128E	
	RCA	**CDM53128**	**1673,1677**
	Rockwell	R23128	
	Signetics	23128	
	SSS	SCM23C128	
	Supertex	CM1310	
	Synertek	SY23128	
	Toshiba	TMM23128	
	UMC	UM23128	
	VTI	23131	
		VT23128	
		VT23129	
		VT23129A	
		VT23130	
		VT23138	
AM9218	AMD	AM9128	
	Cypress	CY7C128	
	Fujitsu	MB8128	
		MB8416	
	Harris	HM6116	
		HM6516	
	IDT	IDT6116	
	Intel	2128	
	MicroPwr	MP6116	
	Mitsubishi	M58275	
		M5M116	
		M5M5116	
		M5M5117	
		M5M5118	
		MS8725	
	Motorola	MCM2016	
		MCM2016H	
		MCM2128	
		MCM6116	**4119**
		MCM61L16	**4119**
		MCM65116	
	National	MMC2116	
	NEC	μPD4016	
	OKI	MSM2128	
		MSM5128	**4732,4733**
	RCA	MWS6116A	
	SSS	883C21C16	
		BCM21C16	
		SCM21C16	
		SCM6116	
	TI	TMS4016	
	ThomsonCSF	ET2128	
	Toshiba	**TC5516A**	**4263**
			(Continued)

◆ Discontinued

Bold face device numbers indicate manufacturers data is provided in the IC Master on the pages noted.

Advanced Micro Devices (Cont'd)

Manufacturer Device	Replacement Source	Device	IC Master Page
AM9218	Toshiba	TMM2015A	
		TMM2016	
		TMM2016A	**4263**
	Samsung	KM6816	
	UMC	UM2128	
	Universal	US574HC133	
AM92256	Fujitsu	MB83256	
	GI	R09256	
	GouldAMI	S23256	
		S38256	
	GTEMicro	G53256	
	Hitachi	HN613256	
	Mitsubishi	M5M23256	
	Mostek	MK38000	
	Motorola	MCM63256	
		MCM65256	
	NCR	NCR23256	
		NCR23257	
	NEC	UPD23256	
		UPD23256A	
		UPD23C256E	
	OKI	**MSM38256**	**4733**
	Panasonic	MN23256	
		MN23257	
	RCA	CDM52356	
		CDM53256	**1673,1678**
	S-MOS	**SMM2326**	**4178**
		SMM6325	**4178**
		SMM6326	**4178**
	Signetics	23256	
		23256A	
	SSS	SCM23C256	
	Supertex	CM2560	
	Toshiba	**TMM23256**	**4263**
	UMC	UM23256	
	VTI	23257	
		VT23256	
		VT23257	
AM9232	CSG	MPS2332	
	Fairchild	F3532	
	GI	R03-9332	
	GouldAMI	S2333	
		S68A332	
	GTEMicro	G2332	
	Hitachi	HN46332	
	Intech	IM7332	
	Intel	2332	
	Mitsubishi	M58333	
	Motorola	**MCM68A332**	**4120**
	National	NM52132	
	NCR	NCR2332	
	NEC	UPD2332A	
	Panasonic	MN2332	
	RCA	**CDM5333**	**1673,1677**
	Rockwell	R2332	
	SGS	M2332	
	Sharp	LH2332	
	Siemens	SA88332	
		SAB8332	
	Signetics	2332	
		2632A	
	SiliconG	SG3532	
	SSS	SCM23C32	
	SMC	ROM4732	
	Supertex	23SC32	
		CM3200	
	Synertek	SY2332	
	TI	TM2332	
		TMS2332	
		TMS4732	
	Toshiba	TMM2332	
		TMM333P	
	VTI	VT2332	
AM9264	GouldAMI	S2364	
		S68A364	
	Hitachi	HN48364	
	Motorola	**MCM68364**	**4120**
	NCR	NCR2364	
	OKI	**MSM3864**	**4733**
	Plessey	SL2364C	
	S-MOS	**SMM2364**	**4178**
	Sharp	LH2364A	
	Signetics	2364	
	Synertek	SYM2364	
	TI	TMS2364	
		TMS4764	
	Toshiba	TMM2364	
			(Continued)
AM9264	VTI	VT2364	
	Weitek	SC8164	
AM9265	Fairchild	F3568	
		F3569	
		F3570	
	GI	R03-9365	
		R09864	
	GouldAMI	S2364	
		S6364	
	GTEMicro	G5364	
	Hitachi	HN61364	
	Intel	2364A	
	Mitsubishi	M5M2364	
		M5M2365	
		M5M23C64	
	Mostek	MK37000	
	Motorola	MCM68369	
		MCM68370	
	National	MM52264	
		NM52264	
	OKI	**MSM3864**	**4733**
	Panasonic	MN2364	
		MN4864	
	RCA	**CDM5365**	**1673,1677**
	Rockwell	R2364B	
	SSS	SCM23C65	
	Supertex	23SC64	
		23SC64/A	
		CM6400	
	Synertek	SY2365/A	
	TI	TMS2364	
		TMS4764	
	Toshiba	TMM2365	
	UMC	UM2366	
	VTI	VT2365	
AM93422	Cypress	CY7C122	
	Fairchild	93422	
	Motorola	MCM93422	
AM93L412	Fairchild	97L412	
AM9511	AMD	AM9511A	
	Intel	8231	
AM9511A	AMD	AM9511	
	Intel	8231	
AM9516	Zilog	Z8516	
AM9517	AMD	AM9517A	
	Intel	8237	
AM9517A	AMD	AM9517	
	Intel	8237	
AM9517A-4	AMD	AM8237A	
	Harris	82C37A	
	Intel	8237A-4	
	Nitron	NC72C37A	
AM9517A-5	Intel	8237A-5	
AM9518	AMD	Z8068	
	Zilog	Z8068	
AM9864	AMD	AM2864B	
	EXEL	XL2864A	
		XLS2864A	
	Fujitsu	UBM28C64	
	Hitachi	HN58064	
	SEEQ	2864	
	Xicor	**X2864A**	**734,4280**
AM9968	AMD	AM2168	
	Fujitsu	MB8168	
	Hitachi	HM6168	
	Inmos	IMS1420	
		IMS1421	
	NEC	μPD4314	
AM9988	AMD	AM9988C	
	Cypress	CY7C186	
	Fujitsu	MB8464	
		MB8464A	
	Hitachi	HM6264	
		HM6464	
	IDT	IDT7188	
		IDT7M864	
	Mitsubishi	M5M5165	
	Motorola	MCM6164	
	NEC	μPD4364	
		μPD4464	
	OKI	MSM5164	
		MSM5165	
	RCA	CDM6264	
	S-MOS	SRM2064	
		SRM2264	**4177,4178**
	Sharp	LH5164	
	Toshiba	TC5564	
		TC5565	
		TMM2063	
			(Continued)
AM9988	Toshiba	TMM2064	
	Samsung	KM6264	
AM9988C	AMD	AM9988	
	Cypress	CY7C186	
	Fujitsu	MB8464	
		MB8464A	
	Hitachi	HM6264	
		HM6464	
	IDT	IDT7188	
		IDT7M864	
	Mitsubishi	M5M5165	
	Motorola	MCM6164	
	NEC	μPD4364	
		μPD4464	
	OKI	MSM5164	
		MSM5165	
	RCA	CDM6264	
	S-MOS	SRM2064	
		SRM2264	**4177,4178**
	Sharp	LH5164	
	Toshiba	TC5564	
		TC5565	
		TMM2063	
		TMM2064	
	Samsung	KM6264	
AM99C164	Inmos	IMS1620	
	Lattice	SR64K4	
	Motorola	MCM6288	
AM99C641	Fairchild	F1600	
		F1601	
	Fujitsu	MB8171	
		MB81C71	
	Hitachi	HM10414	
	Motorola	MCM6287	
AM99C68	AMD	AM2168	
	Cypress	CY7C168	
	Fujitsu	MB8168	
	Hitachi	HM6168	
	Inmos	IMS1420	
		IMS1421	
		IMS1423	
	IDT	IDT6168	
	Mitsubishi	M5M2168	
	Motorola	MCM6168	
	TI	TMS2168	
AMD29510	AMD	AM29510	
		AMD29L510	
	AD	ADSP1010	
		ADSP1010A	
	Cypress	CY7C510	
	IDT	**IDT7210**	**1084,1088**
	LogicDev	LMA1010	
	MicroPwr	**MP1010**	**688**
	TI	74HCT9510	
		SN74HCT9510	
	TRW-LSI	TDC1010	
		TDC2010	
		TMC2010	
		TMC2110	
	Weitek	WTL1010	
		WTL2010	
		WTL2044	
		WTL2245	
AMD29L510	AMD	AM29510	
		AMD29510	
	AD	ADSP1010	
		ADSP1010A	
	Cypress	CY7C510	
	IDT	**IDT7210**	**1084,1088**
	LogicDev	LMA1010	
	MicroPwr	**MP1010**	**688**
	TI	74HCT9510	
		SN74HCT9510	
	TRW-LSI	TDC1010	
		TDC2010	
		TMC2010	
		TMC2110	
	Weitek	WTL1010	
		WTL2010	
		WTL2044	
		WTL2245	
AMD5380	NCR	MCR5380	
AMPAL16H8	MMI	PAL16P8A	
AMPAL16L8L	MMI	PAL16L8A-2	
	TI	PAL16LA8-2	
AMPAL16R4	Cypress	CYPAL16R4	
	MMI	PAL16R4	
		PAL16R4A	
	National	PAL16R4	
	TI	**PAL16R4A**	**725**
		TIBPAL16R4-20	
			(Continued)
AMPAL16R4	**TI**	**TIBPAL16R4-25**	**725,4759**
		TIBPAL16R4-30	
AMPAL16R6	Cypress	CYPAL16R6	
	MMI	PAL16R6	
		PAL16R6A	
	National	PAL16R6	
	TI	**PAL16R6A**	**725**
		TIBPAL16R6-20	
		TIBPAL16R6-25	**725,4759**
		TIBPAL16R6-30	
AMPAL16R6L	MMI	PAL16R6A-2	
	TI	**PAL16R6A-2**	**725**
AMPAL16R8L	MMI	PAL16R8A-2	
	TI	**PAL16R8A-2**	**725**
AMPALR4L	MMI	PAL16R4A-2	
	TI	**PAL16R4A-2**	**725**
D8259	Fujitsu	MBL8259	
	Harris	**82C59A**	**682,1619,1621,1631**
		CP82C59A	
	Intel	8259	
		82C59A	
	National	INS8259	
	NEC	UPD8259A/A-2	
	Nitron	NC82C59A	
	OKI	**MSM82C59A**	**4732**
	S-MOS	SMC82C59AC	
	Toshiba	TMP8259	
DAC-08	AMD	AM1408	
		SSS1408	
	AD	AD1408	
		ADDAC-08	
	Datel	DAC-08B	
		DAC-I8BC	
		DAC-IC8B	
		DAC-IC8BC	**3162**
	Fairchild	DAC-08	
		MA0802M	
		μA0801	
		μA0802	
	Hitachi	HA17408	
	Motorola	**DAC-08**	**3630**
		MC1408	
	National	DAC0801	
		DAC0802	
		DAC0806	
		DAC0807	
		DAC0808	
	NEC	μPC624	
	PMI	**DAC-08**	**3637,3639**
		DAC-1408	
	Raytheon	**DAC-08**	**3664**
	Signetics	MC1408	
◆DM71LS95	National	DM71LS95	
◆DM71LS96	National	DM71LS96	
◆DM71LS97	National	DM71LS97	
◆DM71LS98	National	DM71LS98	
DP8303	National	DP8303	
DP8304	AMD	8304	
	Fujitsu	**MBL8286**	**1611**
	Harris	**82C86**	**1619,1622**
	Intel	8286	
		82C86	
	National	DP8304	
	NEC	μPB8286	
		μPD71086	
	Nitron	NC82C86	
	OKI	82C86	
DP8307	National	DP8307	
DS7838	National	DS7838	
HM10484	Fairchild	F10484	
	Fujitsu	MBM10484	
	Hitachi	HM10484	
LF156A	AD	AD544	
	Burr-Brown	**OPA156A**	**3149,3150**
	Fairchild	LF156A	
	LinearTech	LF156A	
	National	LF156A	
	PMI	PM156A	
	TI	**TL081**	**718**
LF157A	AMD	27S29	
	Fairchild	LF157A	
	Harris	7649	
	MMI	5349-1	
		6349-1	
	National	545472	
		74S472	
		LF157A	
	PMI	PM157A	
			(Continued)

◆ Discontinued

The manufacturers report their devices can be used as direct replacements.
Performance details often differ, so compare the specifications considering your requirements.

Advanced Micro Devices (Cont'd)

Manufacturer Device	Replacement Source	Device	IC Master Page
LF157A	**Raytheon**	**29621**	**4134**
	Signetics	825147	
	TI	28S42	
LF198	LinearTech	LF198	
	National	LF198	
	Signetics	**LF198**	**3725**
◆LF255	MicroPwr	MP255	
	National	LF255	
	PMI	PM255	
	ThomsonCSF	TDE0155	
◆LF256	National	LF256	
	ThomsonCSF	TDE0156	
◆LF355	LinearTech	LF355	
	Motorola	**LF355**	**3616**
	National	LF355	
	PMI	PM355	
	ThomsonCSF	LF355	
LF355A	LinearTech	LF355A	
	Motorola	LF355A	
	National	LF355A	
	PMI	PM355A	
◆LF356	LinearTech	LF356	
	Motorola	**LF356**	**3616**
	National	LF356	
	PMI	PM356	
	ThomsonCSF	LF356	
LF356A	**Burr-Brown**	**OPA356A**	**3149,3150**
	LinearTech	LF356A	
	Motorola	LF356A	
	National	LF356A	
	PMI	PM356A	
LH2101	Intersil	LH2101	
	National	LH2101	
	Raytheon	LH2101	
◆LH2111	National	LH2111	
	Raytheon	LH2111	
◆LH2311	Intersil	LH2311	
	National	LH2311	
LM101	AD	AD101	
	Fairchild	μA101	
	Intersil	AD101	
	LinearTech	LM101	
	Motorola	LM101	
	Raytheon	LM101	
	SiliconG	SG101	
	ThomsonCSF	LM101	
LM105	Fairchild	μA105	
	Intersil	LM105	
	National	LM105	
	SiliconG	SG105	
	ThomsonCSF	LM105	
◆LM106	National	LM106	
	TI	**LM106**	**719**
LM107	**AD**	**AD741S**	**3507**
	Burr-Brown	3500	
	LinearTech	LM107	
	National	LH741A	
		LM107	
	PMI	PM741	
	Raytheon	RC741	
	SiliconG	SG107	
	TI	**LM107**	**718**
	ThomsonCSF	LM107	
LM108A	AD	AD108A	
	Fairchild	UA108A	
	Harris	LM108A	
	LinearTech	LM108A	
	MicroPwr	**MP108A**	**688,3607**
	Motorola	**LM108A**	**3615**
	PMI	PM108A	
LM110	National	LM110	
◆LM111	AD	AD111	
	Fairchild	μA111	
	LinearTech	LM111	
	Motorola	**LM111**	**3631**
	National	LM111	
	Raytheon	LM111	
	Signetics	**LM111**	**3725**
	SiliconG	SG111	
	TI	**LM111**	**719**
	ThomsonCSF	LM111	
LM112	National	LM112	
◆LM118	Harris	LM118	
	LinearTech	LM118	
	National	LM118	
	TI	LM118	
◆LM119	LinearTech	LM119	
	National	LM119	
	Signetics	**LM119**	**3723**
LM124A	LinearTech	LT1014	
	Motorola	LM124A	
	National	LM124A	
	RCA	CA124A	
	Signetics	LM124A	
	SiliconG	SG124	
	TI	LM124A	
◆LM139	Fairchild	μA139	
	Motorola	**LM139**	**3631**
	National	LM139	
	PMI	CMP-04	
		PM139	
	Raytheon	LM139	
	RCA	**CA139**	**3672,3677**
	Signetics	LM139	
	TI	**LM139**	**719**
LM139A	**Motorola**	**LM139A**	**3631**
	National	LM139A	
	PMI	CMP-04	
		PM139A	
	RCA	**CA139A**	**3672,3677**
	TI	**LM139A**	**719**
◆LM148	LinearTech	LT1014	
	MicroPwr	OP11	
	National	LM148	
	PMI	OP11	
	Raytheon	LM148	
		RM4156	
		RM4158	
	TI	**LM148**	**719**
LM149	National	LM149	
◆LM206	National	LM206	
LM208A	AD	AD208A	
	Fairchild	UA208A	
	MicroPwr	**MP208A**	**3607**
	Motorola	**LM208A**	**3615**
	National	LM208A	
	PMI	PM208A	
		PM308A	
◆LM211	AD	AD211	
	Motorola	**LM211**	**3631**
	National	LM211	
	RCA	LM211	
	Signetics	**LM211**	**3725**
	SiliconG	SG211	
	TI	LM211	
	ThomsonCSF	LM211	
◆LM218	National	LM218	
	TI	LM218	
	ThomsonCSF	TDE0118	
◆LM219	National	LM219	
	Signetics	**LM219**	**3725**
	ThomsonCSF	TDE0119	
◆LM239	Fairchild	UA250	
		UA26LS31	
		UA26LS32	
		μA239	
	Motorola	**LM239**	**3631**
	National	LM239	
	PMI	CMP-04	
		PM239	
	Raytheon	LM239	
	RCA	**CA239**	**3672,3677**
	Signetics	LM239	
	TI	LM239	
	ThomsonCSF	TDE0139	
LM239A	**Motorola**	**LM239A**	**3631**
	National	LM239A	
	PMI	CMP-04	
	RCA	**CA239A**	**3672,3677**
◆LM248	National	LM248	
	TI	LM248	
	ThomsonCSF	TDE0148	
◆LM308	AD	AD308	
	Burr-Brown	3500	
		3501	
	Fairchild	μA308	
	Intersil	AD308	
		LM308	**3600,3601**
	MicroPwr	**MP308**	**3607**
	Motorola	**LM308**	**3615**
	National	LM308	
	Raytheon	LM308	
LM308A	AD	AD308A	
	Fairchild	UA308A	
	Harris	LM308A	
	LinearTech	LM308A	
	MicroPwr	**MP308A**	**3607**
			(Continued)
LM308A	**Motorola**	**LM308A**	**3615**
	National	LM308A	
◆LM311	AD	AD311	
	Fairchild	μA311	
	LinearTech	LM311	
	Motorola	**LM2903**	**3631**
		LM311	**3631**
	National	LM2903	
		LM311	
	NEC	μPC271	
		μPC311	
	Raytheon	LM311	
	RCA	**CA311**	**3672,3677**
		LM311	
	SGS	LM2903	
		LM311	
	Signetics	**LM2903**	**3725**
		LM311	**3721**
	SiliconG	SG311	
	TI	LM2903	
		LM311	
	ThomsonCSF	LM2903	
		LM311	
		SFC3111	
◆LM316	National	LM316	
◆LM318	AD	AD518	
	Harris	LM318	
	LinearTech	LM318	
	National	LM318	
	NEC	μPC159	
	TI	LM318	
	ThomsonCSF	LM318	
		TDB0118	
◆LM319	NEC	μPC319	
	Signetics	**LM319**	**3723**
	ThomsonCSF	LM319	
◆LM339	AMD	LM339A	
	Fairchild	μA339	
	Hitachi	HA17901	
	Motorola	**LM339**	**3631**
	National	LM339	
	NEC	μPC339	
	PMI	CMP-04	
		PM339A	
	Raytheon	LM339	
	RCA	**CA339**	**3672,3677**
		CA339A	**3672,3677**
		LM339	
	SGS	LM339	
	TI	LM339	
	ThomsonCSF	LM339	
		TDB0139	
LM339A	Fairchild	μA339	
	Hitachi	HA17901	
	Motorola	**LM339**	**3631**
	National	LM339	
	NEC	μPC339	
	PMI	CMP-04	
		PM339A	
	Raytheon	LM339	
	RCA	**CA339**	**3672,3677**
		CA339A	**3672,3677**
		LM339	
	SGS	LM339	
	TI	LM339	
	ThomsonCSF	LM339	
		TDB0139	
MCM6256	AT&T	WCM41256	
	Fujitsu	MB81256	
	Hitachi	HM50256	
		HM50257	
	MicronTech	MT1256	
	Mitsubishi	M5M4256	
		MSM4257	
	Motorola	MCM6256	
		MCM6257	
	NEC	MPD41257	
		μPD41256	
	OKI	M5M37256	
		MSM37256	
		MSM41256	
	Panasonic	MM41256	
	TI	TMS4257	
	Toshiba	TMM41256	
	Samsung	KM1256	
MCM6257	Fujitsu	MB81257	
	Hitachi	HM50257	
	National	41257	
◆N8T26	Hitachi	HD268T26	
	Motorola	**MC6880A**	**3210**
		MC8T26	
	Signetics	N8T26	
◆N8T26A	Fairchild	μA8T26A	
	Motorola	**MC8T26A**	**3210**
	National	DS8T26A	
	Signetics	**N8T26A**	**1175**
	TI	N8T26A	
◆N8T28	**Motorola**	**MC8T28**	**3210**
	Signetics	**N8T28**	**1175**
◆NE592	Fairchild	μA733	
	Hitachi	HA17733	
	Intersil	μA733	
	Motorola	**MC1733**	**3616**
		NE592	
	National	LM733	
	Signetics	**μA733**	**3721,3729**
	TI	μA733	
◆S8T26	Signetics	S8T26	
◆S8T28	Signetics	S8T28	
◆SE592	**Intersil**	**SE592**	**3602**
	Motorola	SE592	
	Signetics	**SE592**	**3722,3729**
SN5489-1	AMD	SN54S289	
	National	DM5489	
		DM54S289	
		MM54S289	
	Signetics	54S289	
		54S301	
		S8225	
		S82S25	
◆SN54LS138	**Fairchild**	**54LS138**	**608,612,621,623**
	Motorola	**SN54LS138**	**1130**
	National	DM54LS138	
	SGS	T54LS138	
	Signetics	54LS138	
	TI	**SN54LS138**	**715**
◆SN54LS139	**Fairchild**	**54LS139**	**608,613,621,623**
	Motorola	**SN54LS139**	**1130**
	National	DM54LS139	
	SGS	T54LS139	
	Signetics	54LS139	
	TI	**SN54LS139A**	**715**
◆SN54LS148	**Motorola**	**SN54LS148**	**1131**
	TI	**SN54LS148**	**715**
◆SN54LS151	**Fairchild**	**54LS151**	**608,613,621,623**
	Motorola	**SN54LS151**	**1129**
	National	DM54LS151	
	SGS	T54LS151	
	Signetics	54LS151	
	TI	**SN54LS151**	**715**
◆SN54LS153	**Fairchild**	**54LS153**	**608,613,621,623**
	Motorola	**SN54LS153**	**1129**
	National	DM54LS153	
	SGS	T54LS153	
	Signetics	54LS153	
	TI	**SN54LS153**	**715**
◆SN54LS157	**Fairchild**	**54LS157**	**608,613,621,623**
	Motorola	**SN54LS157**	**1129**
	National	DM54LS157	
	SGS	T54LS157	
	Signetics	54LS157	
	TI	**SN54LS157**	**715**
◆SN54LS158	**Fairchild**	**54LS158**	**608,613,621,623**
	Motorola	**SN54LS158**	**1129**
	National	DM54LS158	
	SGS	T54LS158	
	Signetics	54LS158	
	TI	**SN54LS158**	**715**
◆SN54LS160A	**Fairchild**	**54LS160A**	**613**
	Motorola	**SN54LS160A**	**1127**
	SGS	T54LS160	
	Signetics	54LS160A	
	TI	**SN54LS160A**	**715**
◆SN54LS161A	Fairchild	54LS161A	
	Motorola	**SN54LS161A**	**1127**
	National	DM54LS161A	
	SGS	T54LS161	
	Signetics	54LS161A	
	TI	**SN54LS161A**	**715**
◆SN54LS162A	**Fairchild**	**54LS162A**	**613**
	Motorola	**SN54LS162A**	**1127**
	National	DM54LS162A	
	SGS	T54LS162	
	Signetics	54LS162A	
	TI	**SN54LS162A**	**715**
◆SN54LS163A	**Fairchild**	**54LS163A**	**613**
	Motorola	**SN54LS163A**	**1127**
	National	DM54LS163	
			(Continued)

◆ Discontinued

Bold face device numbers indicate manufacturers data is provided in the IC Master on the pages noted.

Advanced Micro Devices (Cont'd)

Manufacturer Device	Replacement Source	Device	IC Master Page
◆SN54LS163A	National	DM54LS163A	
	SGS	T54LS163	
	Signetics	54LS163A	
	TI	**SN54LS163A**	**715**
◆SN54LS164	**Fairchild**	**54LS164**	**613**
	Motorola	**SN54LS164**	**1128**
	National	DM54LS164	
	SGS	T54LS164	
	Signetics	54LS164	
	TI	**SN54LS164**	**715**
◆SN54LS168A	**Fairchild**	**54LS168**	**613**
	Motorola	**SN54LS168**	**1127**
	National	DM54LS168	
	SGS	T54LS168	
◆SN54LS169A	**Fairchild**	**54LS169**	**613**
	Motorola	**SN54LS169**	**1127**
	National	DM54LS169	
	SGS	T54LS169	
	TI	SN54LS169B	
◆SN54LS174	**Fairchild**	**54LS174**	**608,613,621,623**
	Motorola	**SN54LS174**	**1126**
	National	DM54LS174	
	SGS	T54LS174	
	Signetics	54LS174	
	TI	SN54LS174	
◆SN54LS175	**Fairchild**	**54LS175**	**608,613,621,623**
	Motorola	**SN54LS175**	**1126**
	National	DM54LS175	
	SGS	T54LS175	
	Signetics	54LS175	
	TI	SN54LS175	
◆SN54LS181	**Fairchild**	**54LS181**	**613**
	Motorola	**SN54LS181**	**1132**
	SGS	T54LS181	
	Signetics	54LS181	
	TI	SN54LS181	
◆SN54LS190	**Motorola**	**SN54LS190**	**1127**
	National	DM54LS190	
	SGS	T54LS190	
	Signetics	54LS190	
	TI	SN54LS190	
◆SN54LS191	**Motorola**	**SN54LS191**	**1127**
	National	DM54LS191	
	SGS	T54LS191	
	Signetics	54LS191	
	TI	SN54LS191	
◆SN54LS192	**Fairchild**	**54LS192**	**613**
	Motorola	**SN54LS192**	**1127**
	National	DM54LS192	
	Raytheon	54LS192	
	SGS	T54LS192	
	Signetics	54LS192	
	TI	SN54LS192	
◆SN54LS193	**Fairchild**	**54LS193**	**608,613,621,623**
	Motorola	**SN54LS193**	**1127**
	National	DM54LS193	
	SGS	T54LS193	
	Signetics	54LS193	
	TI	SN54LS193	
◆SN54LS194A	**Fairchild**	**54LS194A**	**608,613,621,623**
	Motorola	**SN54LS194A**	**1128**
	SGS	T54LS194	
	TI	SN54LS194A	
◆SN54LS195A	**Fairchild**	**54LS195A**	**613**
	Motorola	**SN54LS195A**	**1128**
	SGS	T54LS195	
	Signetics	54LS195A	
	TI	SN54LS195A	
◆SN54LS240	**Fairchild**	**54LS240**	**608,613,621,623**
	MMI	SN54LS240	
	Motorola	**SN54LS240**	**1124**
	SGS	T54LS240	
	TI	SN54LS240	
◆SN54LS241	**Fairchild**	**54LS241**	**613**
	MMI	SN54LS241	
	Motorola	**SN54LS241**	**1124**
	SGS	T54LS241	
	TI	SN54LS241	
◆SN54LS242	**Motorola**	**SN54LS242**	**1124**
	TI	SN54LS242	
◆SN54LS243	**Motorola**	**SN54LS243**	**1124**
	TI	SN54LS243	
◆SN54LS244	**Fairchild**	**54LS244**	**613**
	MMI	SN54LS244	
◆SN54LS244	**Motorola**	**SN54LS244**	**1124**
	SGS	T54LS244	
	TI	SN54LS244	
◆SN54LS251	**Fairchild**	**54LS251**	**613**
	Motorola	**SN54LS251**	**1129**
	SGS	T54LS251	
	Signetics	54LS251	
	TI	SN54LS251	
◆SN54LS253	**Fairchild**	**54LS253**	**608,613,621,623**
	Motorola	**SN54LS253**	**1129**
	National	DM54LS253	
		DM7214	
	SGS	T54LS253	
	Signetics	54LS253	
	TI	SN54LS253	
◆SN54LS273	**Fairchild**	**54LS273**	**614**
	MMI	SN54LS273	
	Motorola	**SN54LS273**	**1126**
	SGS	T54LS273	
	Signetics	54LS273	
	TI	**SN54LS273**	**715**
◆SN54LS373	MMI	SN54LS373	
	Motorola	**SN54LS373**	**1126**
	SGS	T54LS373	
	Signetics	54LS373	
	TI	**SN54LS373**	**715**
◆SN54LS374	**Fairchild**	**54LS374**	**614**
	MMI	SN54LS374	
	Motorola	**SN54LS374**	**1126**
	National	DM54LS374	
	SGS	T54LS374	
	TI	**SN54LS374**	**715**
◆SN54LS377	**Fairchild**	**54LS377**	**614**
	MMI	SN54LS377	
	Motorola	**SN54LS377**	**1126**
	SGS	T54LS377	
	Signetics	54LS377	
	TI	**SN54LS377**	**715**
SN54LS568	**Motorola**	**SN54LS568**	**1127**
SN54S189	National	DM54S189	
	Signetics	54S189	
SN54S289	AMD	SN5489-1	
	National	DM5489	
		DM54S289	
		MM54S289	
	Signetics	54S289	
		54S301	
		S8225	
		S82S25	
◆SN74LS161	Fairchild	74LS161A	
	Hitachi	HD74LS161A	
	Motorola	**SN74LS161A**	**1127**
	National	DM74LS161	
	Panasonic	DN74LS161A	
	SGS	T74LS161	
	Signetics	**74LS161A**	**1157**
	TI	SN74LS161A	
◆SN74LS240	**Fairchild**	**74LS240**	**5311**
	Hitachi	HD74LS240	
	MMI	SN74LS240	
	Motorola	**SN74LS240**	**1124**
	Panasonic	DN74LS240	
	SGS	T74LS240	
	Signetics	**74LS240**	**1157**
	TI	SN74LS240	
◆SN74LS241	**Fairchild**	**74LS241**	**5311**
	Hitachi	HD74LS241	
	MMI	SN74LS241	
	Motorola	**SN74LS241**	**1124**
	Panasonic	DN74LS241	
	SGS	T74LS241	
	Signetics	**74LS241**	**1157**
	TI	SN74LS241	
◆SN74LS242	Fairchild	74LS242A	
	Motorola	**SN74LS242**	**1124**
	Signetics	**74LS242**	**1158**
	TI	SN74LS242	
◆SN74LS243	Fairchild	74LS243A	
	Motorola	**SN74LS243**	**1124**
	Signetics	**74LS243**	**1158**
	TI	SN74LS243	
◆SN74LS244	**Fairchild**	**74LS244**	**5311**
	Hitachi	HD74LS244	
	MMI	SN74LS244	
	Motorola	**SN74LS244**	**1124**
	Panasonic	DN74LS244	
	SGS	T74LS244	
	Signetics	**74LS244**	**1158**
	TI	SN74LS244	
◆SN74LS273	**Fairchild**	**74LS273**	**5311**
	MMI	SN74LS273	
◆SN74LS273	**Motorola**	**SN74LS273**	**1126**
	SGS	T74LS273	
	Signetics	74LS273	
	TI	SN74LS273	
SN74LS299	**Fairchild**	**74LS299**	**5311**
	Hitachi	HD74LS299	
	Motorola	**SN74LS299**	**1129**
	SGS	T74LS299	
	TI	SN74LS299	
SN74LS322	**Fairchild**	**74LS322**	**5311**
	Motorola	SN74LS322	
	TI	SN74LS322A	
SN74LS323	**Fairchild**	**54LS323**	**614**
		74LS323	**5311**
	Motorola	**SN74LS323**	**1129**
	TI	**SN54LS323**	**715**
		SN74LS323	
◆SN74LS373	**Fairchild**	**74LS373**	**5311**
	MMI	SN74LS373	
	Motorola	**SN74LS373**	**1126**
	Panasonic	DN74LS373	
	SGS	T74LS373	
	Signetics	**74LS373**	**1158**
	TI	SN74LS373	
◆SN74LS374	**Fairchild**	**74LS374**	**5311**
	MMI	SN74LS374	
	Motorola	**SN74LS374**	**1126**
	National	DM74LS374	
	SGS	T74LS374	
	Signetics	**74LS374**	**1158**
	TI	SN74LS374	
◆SN74LS377	**Fairchild**	**74LS377**	**5311**
	MMI	SN74LS377	
	Motorola	**SN74LS377**	**1126**
	SGS	T74LS377	
	Signetics	**74LS377**	**1158**
	TI	SN74LS377	
SN74LS378	**Fairchild**	**74LS378**	**5311**
	Motorola	**SN74LS378**	**1126**
	SGS	T74LS378	
	Signetics	**74LS378**	**1158**
	TI	SN74LS378	
SN74LS379	**Fairchild**	**74LS379**	**5311**
	Motorola	**SN74LS379**	**1126**
	SGS	T74LS379	
	TI	SN74LS379	
SN74LS381	TI	SN74LS381A	
SN74LS384	TI	SN74LS384	
SN74LS385	**Motorola**	**SN74LS385**	**1132**
	TI	SN74LS385	
SN74LS399	**Motorola**	**SN74LS399**	**1129**
	SGS	T74LS399	
	TI	SN74LS399	
SN74LS568	**Motorola**	**SN74LS568**	**1127**
	Signetics	74LS568	
SN74LS569	**Motorola**	**SN74LS569**	**1127**
	Signetics	74LS569	
SN74S138	Fairchild	74S138	
	National	DM74S138	
	Signetics	**74S138**	**1157**
	TI	SN74S138	
SN74S189	AMD	AM27LS03	
		AM27S03	
	Cypress	CY27S03	
		CY74S189	
		CY7C189	
		CY7CS189	
	Fairchild	74S189	
		93405	
	National	DM74S189	
		DM7599	
		DM8599	
	TI	SN74S189B	
SN74S251	National	DM74S251	
	Signetics	**74S251**	**1158**
	TI	SN74S251	
SSS1408	AMD	AM1408	
		DAC-08	
	AD	AD1408	
		ADDAC-08	
	Datel	DAC-08B	
		DAC-I8BC	
		DAC-IC8B	
		DAC-IC8BC	**3162**
	Fairchild	DAC-08	
		MA0802M	
		μA0801	
		μA0802	
	Hitachi	HA17408	
	Motorola	**DAC-08**	**3630**
		MC1408	
	National	DAC0801	
SSS1408	National	DAC0802	
		DAC0806	
		DAC0807	
		DAC0808	
	NEC	μPC624	
	PMI	**DAC-08**	**3637,3639**
		DAC-1408	
	Raytheon	**DAC-08**	**3664**
	Signetics	MC1408	
SSS725	Fairchild	μA725	
	National	LM725	
	PMI	OP06	
	Raytheon	RM725	
Z8001	SGS	Z8001	
	Zilog	Z8001	
Z8002	SGS	Z8002	
	Zilog	Z8002	
Z8010	SGS	Z8010	
	Zilog	Z8010	
Z8016	Zilog	Z8016	
Z8030	SGS	Z8030	
	Zilog	Z8030	
Z8036	SGS	Z8036	
	Zilog	Z8036	
Z8038	SGS	Z8038	
	Zilog	Z8038	
Z8060	SGS	Z8060	
	Zilog	Z8060	
Z8068	AMD	AM9518	
	Zilog	Z8068	
Z8530	SGS	Z8530	
	Zilog	Z8530	
Z8536	SGS	Z8536	
	Zilog	Z8536	

(Continued)
(Continued)
(Continued)

Amperex Electronic Corp.

Manufacturer Device	Replacement Source	Device	IC Master Page
AM9233	CSG	MPS2333	
	Fairchild	F3533	
	GI	R03-9333	
	GouldAMI	S2333	
	NEC	UPD23328	
	RCA	**CDM5332**	**1673,1677,1678**
	Signetics	2332	
	SSS	SCM23C33	
	Supertex	23C32	
	Synertek	SY2333	
	Toshiba	TMM2332	
	Universal	UM2333	

Analog Devices

Manufacturer Device	Replacement Source	Device	IC Master Page
AD0042	AD	AD503	
	Intersil	AD503	
		LH0042	
	National	LH0042	
AD101	AMD	LM101	
	Fairchild	μA101	
	Intersil	AD101	
	LinearTech	LM101	
	Motorola	LM101	
	Raytheon	LM101	
	SiliconG	SG101	
	ThomsonCSF	LM101	
AD108	Fairchild	μA108	
	Harris	LM108	
	Intersil	**LM108**	**3600,3601**
	LinearTech	LM108	
	MicroPwr	**MP108**	**688,3607**
	Motorola	**LM108**	**3615**
	National	LM108	
	PMI	PM108	
	SGS	M108	
	SiliconSys	**SSI108**	**3736**
	TI	LM108	
AD108A	AMD	LM108A	
	Fairchild	UA108A	
	Harris	LM108A	
	LinearTech	LM108A	
	MicroPwr	**MP108A**	**688,3607**
	Motorola	**LM108A**	**3615**
	PMI	PM108A	
AD111	Fairchild	μA111	
	LinearTech	LM111	
	Motorola	**LM111**	**3631**
	National	LM111	
	Raytheon	LM111	
	Signetics	**LM111**	**3725**
	SiliconG	SG111	
	TI	**LM111**	**719**
	ThomsonCSF	LM111	

◆ Discontinued

The manufacturers report their devices can be used as direct replacements.
Performance details often differ, so compare the specifications considering your requirements.

Analog Devices (Cont'd)

Manufacturer Device	Replacement Source	Device	IC Master Page
AD1403	LinearTech	LT1009	
	Motorola	**MC1403**	**3628**
	SiliconG	SG3503	
		SG3505	
AD1408	AMD	AM1408	
		DAC-08	
		SSS1408	
	AD	ADDAC-08	
	Datel	DAC-08B	
		DAC-I8BC	
		DAC-IC8B	
		DAC-IC8BC	**3162**
	Fairchild	DAC-08	
		MA0802M	
		μA0801	
		μA0802	
	Hitachi	HA17408	
	Motorola	**DAC-08**	**3630**
		MC1408	
	National	DAC0801	
		DAC0802	
		DAC0806	
		DAC0807	
		DAC0808	
	NEC	μPC624	
	PMI	**DAC-08**	**3637,3639**
		DAC-1408	
	Raytheon	**DAC-08**	**3664**
	Signetics	MC1408	
AD1508	Datel	DAC-IC8BM	
	Motorola	MC1508	
	National	MC1508	
	PMI	DAC-1508	
	Signetics	MC1508	
		SE5008	
		SE5009	
AD2020	**RCA**	**CA3162**	**3218**
AD208A	AMD	LM208A	
	Fairchild	UA208A	
	MicroPwr	**MP208A**	**3607**
	Motorola	**LM208A**	**3615**
	National	LM208A	
	PMI	PM208A	
		PM308A	
AD211	**Motorola**	**LM211**	**3631**
	National	LM211	
	RCA	LM211	
	Signetics	**LM211**	**3725**
	SiliconG	SG211	
	TI	LM211	
	ThomsonCSF	LM211	
AD2700	HybridSys	R675-4	
	HyComp	HC2700	
		HC2710	
AD2701	HybridSys	R675-5	
	HyComp	HC2701	
		HC2710	
	Maxim	AD2701	
AD2702	HybridSys	R675-3	
	HyComp	HC2702	
		HC2712	
AD2710	HyComp	HC201	
		HC2711	
	Maxim	AD2710	
AD301	Fairchild	μA301A	
	Intersil	AD301	
	LinearTech	LM301	
		LM301A	
	Motorola	LM301	
	National	LM301	
		LM301A	
	NEC	μPC157	
		μPC301	
	Raytheon	LM301	
	RCA	CA301	
		LM301	
	SiliconG	SG301	
	TI	LM301	
		LM301A	
	ThomsonCSF	LM301A	
	Toshiba	TA7506	
AD308	Burr-Brown	3500	
		3501	
	Fairchild	μA308	
	Intersil	AD308	
		LM308	**3600,3601**
	MicroPwr	**MP308**	**3607**
	Motorola	**LM308**	**3615**
	National	LM308	
	Raytheon	LM308	
AD308A	AMD	LM308A	
	Fairchild	UA308A	
	Harris	LM308A	
	LinearTech	LM308A	
	MicroPwr	**MP308A**	**3607**
	Motorola	**LM308A**	**3615**
	National	LM308A	
AD311	Fairchild	μA311	
	LinearTech	LM311	
	Motorola	**LM2903**	**3631**
		LM311	**3631**
	National	LM2903	
		LM311	
	NEC	μPC271	
		μPC311	
	Raytheon	LM311	
	RCA	**CA311**	**3672,3677**
		LM311	
	SGS	LM2903	
		LM311	
	Signetics	**LM2903**	**3725**
		LM311	**3721**
	SiliconG	SG311	
	TI	LM2903	
		LM311	
	ThomsonCSF	LM2903	
		LM311	
		SFC3111	
AD346	**MicroNet**	**MN346**	**3205**
AD3542	Burr-Brown	3542	
AD370	AD	AD371	
	HybridSys	DAC346	
		DAC347	
		DAC356	
	MicroNet	**MN370**	**3204**
		MN371	
AD371	AD	AD370	
	HybridSys	DAC346	
		DAC347	
		DAC356	
	MicroNet	**MN370**	**3204**
		MN371	
AD376	Burr-Brown	ADC76	
AD381	AD	AD544	
	Burr-Brown	0PA606	
	LinearTech	LF155	
		LT1022	
		LT1055	
		LT1056	
		OP-15	
	National		
		LF155	
	PMI	OP-15	
	ThomsonCSF	LF155	
AD3860	HybridSys	HS3860	
	DDC	DAC-SL	
	MicroNet	**MN3860**	**3204**
AD503	AD	AD0042	
	Intersil	AD503	
		LH0042	
	National	LH0042	
AD504	TeledyneP	1319-01	
AD506	AD	AD542	
	Burr-Brown	0PA506	
	National	LH0022	
		LH740A	
		LM0052	
	TeledyneP	1424	
		1425	
AD507	Burr-Brown	3508	
	Datel	AM-462-1	
		AM-462-2	
	Elantec	**EHA2620**	**3538**
		EHA2622	**3538**
		EHA2625	**3538**
	Harris	HA-2620	
		HA-2622	
		HA-2625	
	Intersil	A561	
AD509	Burr-Brown	3507	
	Harris	HA2520	
	TeledyneP	1322	
AD510	AD	AD517	
	Burr-Brown	0PA27	
	Harris	HA0P27	
	LinearTech	0P27	
		LT1007	
	PMI	0P27	
	Raytheon	0P27	
		RC714	**3666**
AD515	Burr-Brown	0PA104	
AD517	AD	OP-07	
	Fairchild	UA714	
	Harris	HA-0P07	
		HA5130	
		HA5135	
	LinearTech	OP-07	
	Micra	MC0021	
	MicroPwr	MPOP07	
	NEC	UPC264	
	PMI	0P07	
	Raytheon	0P07	
	TI	0P07D	
AD518	Harris	LM318	
	LinearTech	LM318	
	National	LM318	
	NEC	μPC159	
	TI	LM318	
	ThomsonCSF	LM318	
		TDB0118	
AD5201	MicroNet	MN5201	
AD5202	MicroNet	MN5202	
AD5203	MicroNet	MN5203	
AD5204	MicroNet	MN5204	
AD5205	MicroNet	MN5205	
AD5206	MicroNet	MN5206	
AD5207	MicroNet	MN5207	
AD5210	**Datel**	**ADC-5210**	**3160,3162**
	DDC	DDC-5210	
	MicroNet	**MN5210**	**3203**
AD5211	**Datel**	**ADC-5211**	**3160,3162**
	DDC	DDC-5211	
	MicroNet	MN5211	
AD5212	**Datel**	**ADC-5212**	**3160,3162**
	DDC	DDC-5212	
	MicroNet	MN5212	
AD5213	**Datel**	**ADC-5213**	**3160,3162**
	MicroNet	MN5213	
AD5214	**Datel**	**ADC-5214**	**3160,3162**
	HybridSys	MN5214	
	MicroNet	MN5214	
	TeledyneP	TP5214	
AD5215	**Datel**	**ADC-5215**	**3160,3162**
	MicroNet	MN5215	
AD528	National	LH0062	
AD530	AD	AD533	
	Burr-Brown	**4203**	**3151**
		MPY100	**3151**
	Intersil	ICL8013	
AD532	**Burr-Brown**	**4205**	**3151**
		4213	**3151,3153**
		4214	**3151**
AD533	AD	AD530	
	Burr-Brown	**4203**	**3151**
		MPY100	**3151**
	Intersil	ICL8013	
AD534	**Burr-Brown**	**MPY534**	**3151**
AD536	**Burr-Brown**	**4341**	**3152**
AD540	**Datel**	**AM-450-2**	**3163**
	Elantec	**EHA2505**	**3538**
	Harris	HA-2505	
AD542	AD	AD506	
	Burr-Brown	0PA506	
	National	LH0022	
		LH740A	
		LM0052	
	TeledyneP	1424	
		1425	
AD544	AD	AD381	
	Burr-Brown	0PA606	
	LinearTech	LF155	
		LT1022	
		LT1055	
		LT1056	
		OP-15	
	National		
		LF155	
	PMI	OP-15	
	ThomsonCSF	LF155	
AD545	**Burr-Brown**	**0PA103**	**3149**
AD547	Burr-Brown	0PA1100	
	Harris	HA5170	
	National	LH0052	
	PMI	0P41	
◆AD559	AMD	AM1408	
		DAC-08	
		SSS1408	
	AD	AD1408	
			(Continued)
◆AD559	AD	ADDAC-08	
	Datel	DAC-08B	
		DAC-I8BC	
		DAC-IC8B	
		DAC-IC8BC	**3162**
	Fairchild	DAC-08	
		MA0802M	
		μA0801	
		μA0802	
	Hitachi	HA17408	
	Motorola	**DAC-08**	**3630**
		MC1408	
	National	DAC0801	
		DAC0802	
		DAC0806	
		DAC0807	
		DAC0808	
	NEC	μPC624	
	PMI	**DAC-08**	**3637,3639**
		DAC-1408	
	Raytheon	**DAC-08**	**3664**
	Signetics	MC1408	
AD562	Datel	DAC562	
	Harris	HI562A	
	MicroPwr	MP562	
	PMI	**PM562**	**3637**
AD565	AD	AD565A	
	Fairchild	UA565	
	Harris	HI565A	
	MicroNet	MN565A	
	Motorola	MC3412	
	TeledyneP	TP565A	
AD565A	AD	AD565	
	Fairchild	UA565	
	Harris	HI565A	
	MicroNet	MN565A	
	Motorola	MC3412	
	TeledyneP	TP565A	
AD565J	Harris	HI565A	
	Motorola	MC3412	
AD565S	Motorola	MC3512	
AD566	MCE	MCE566	
AD570	MCE	MCE570	
AD571	Fairchild	μA571	
	MCE	MCE-571	
AD574	Burr-Brown	ADC574A	
	Datel	ADC574A	
	Harris	HI574A	
	HybridSys	HS574	
	MCE	MCE574	
	MicroNet	**MN574A**	**3203**
	MicroPwr	MP574	
	TeledyneP	TP574A	
AD578	Maxim	AD578	
AD580	**Motorola**	**MC1503**	**3628**
	SiliconG	SG1503	
AD581	Harris	HA1608	
	LinearTech	LTREF01	
		REF-01A	
	Maxim	REF01	
	MicroPwr	MP5531	
		MPREF01	
	Motorola	MC1400AG10	
		MC1400AU10	
		MC1500AU10	
	PMI	REF-01AZ	
		REF01	
	Raytheon	**REF-01**	**3652**
		REF01	
	TeledyneS	TSC9495	
AD583	**Datel**	**SHM-IC-1**	**3163**
	Harris	HA-2425	
	PMI	SMP-10	
		SMP-11	
	TeledyneP	4856	
AD589	Ferranti	ZN423	
	Intersil	**ICL8069**	**3604**
	Maxim	ICL8069	
	MicroPwr	**MP5010**	**688,3607**
	National	LM113	
		LM313	
	TeledyneS	9491	
		T-SC9491	
AD590	Intersil	AD590	
AD7226	Telmos	TML1841	
AD741S	AMD	LM107	
	Burr-Brown	3500	
	LinearTech	LM107	
	National	LH741A	
		LM107	
	PMI	PM741	
	Raytheon	RC741	
			(Continued)

◆ Discontinued

Bold face device numbers indicate manufacturers data is provided in the IC Master on the pages noted.

Analog Devices (Cont'd)

Manufacturer Device	Replacement Source	Device	IC Master Page
AD741S	SiliconG	SG107	
	TI	**LM107**	**718**
	ThomsonCSF	LM107	
AD7501	**Burr-Brown**	**MPC8S**	**3149**
	Datel	MUX808	
		MX-808	**3163**
	Harris	HI508	
	Intersil	IH6108	
	MicroPwr	MP7501	
		MP7508	
	National	LF11508	
		LF13508	
	PMI	DMX-88	
		MUX-08	
		MUX-88	
	Siliconix	DG508A	
	TeledyneP	4554	
AD7502	Datel	MVD409	
	Harris	HI1828A	
	MicroPwr	MP7502	
	National	CD4052	
	Solitron	CM4052	
	SSS	SCL4052	
	Toshiba	TC4052	
AD7503	**Datel**	**MV-808**	**3163**
	Harris	HI1818A	
	HybridSys	MUX201	
	MicroPwr	MP7503	
AD7507	**Burr-Brown**	**MPC8D**	**3149**
	Datel	**MVD-807**	**3163**
		MXD-807	**3163**
	Harris	HI507	
	Intersil	IH6216	
	MicroPwr	MP7507	
	PMI	MUX-28	
	Siliconix	DG507A	
	TeledyneP	4551	
AD7510	MicroPwr	MP7510	
	PMI	SW7510	
AD7511	MicroPwr	MP7511	
	PMI	SW7511	
AD7512	MicroPwr	MP7512	
AD7520	Datel	DAC-HA10B	
	Intersil	AD7520	
	MicroPwr	MP7520	
	National	AD7520	
		DAC1020	
		DAC1021	
		DAC1022	
AD7521	Datel	DAC-HA12B	
	HybridSys	DAC331-12	
	Intersil	AD7521	
	MicroPwr	MP7521	
	National	AD7521	
		DAC1220	
		DAC1221	
		DAC1222	
AD7522	MicroPwr	MP7522	
AD7523	**Datel**	**DAC-7523**	**3162**
	Intersil	AD7523	
	MicroPwr	MP7523	
AD7524	MicroPwr	MP7524	
AD7528	MicroPwr	MP7528	
AD7530	**MicroPwr**	**MP7530**	**688,3206**
AD7531	MicroPwr	MP7531	
AD7533	**Datel**	**DAC-7533**	**3162**
	Intersil	AD7533	
	MicroPwr	MP7533	
	National	AD7533	
AD7541	**Datel**	**DAC-7541**	**3162**
	Harris	HI7541	
	HybridSys	DAC331	
		HS7541	
	Intersil	AD7541	
		ICL7541	
	MicroPwr	MP7541	
		MP7621	
	National	AD7521	
	Siliconix	SI7541	
	TeledyneP	TP7541	
AD7542	MicroPwr	MP7542	
AD7543	MicroPwr	MP7543	
AD7545	**MicroPwr**	**MP7545**	**688,3206**
AD7550	MicroPwr	MP7550	
AD7570	MicroPwr	MP7570	
AD7574	MicroPwr	MP7574	
AD7581	MicroPwr	MP7581	
AD7622	HybridSys	HS3120	
	MicroPwr	MP7622	
	Siliconix	MP7622	
AD7820	National	DS7820	
	TI	**SN55182**	**721**
AD8007	**Intersil**	**ICL8007**	**3600,3601**
ADAC1136	Burr-Brown	DAC736	
ADADC80	Burr-Brown	ADC80	
	MicroNet	**MNADC80**	**3203**
ADADC84	AD	ADADC85	
		ADADC85S	
	Burr-Brown	ADC84	
		ADC85	
	Datel	ADC-84	
		ADC-85	
		ADC-87	
		ADC-HX12B	
		ADC-HZ12B	
		ADC-HZ12BGZ	
	HybridSys	ADC581	
		ADC581B	
		HSADC85	
		HSADC85C	
	DDC	ADH-8585-1	
		DDC-5240	
		DDCADC85	
		DDCADC87	
	MicroNet	MN5240	
		MNADC84	
		MNADC85	
		MNADC87	**3203**
ADADC85	AD	ADADC84	
		ADADC85S	
	Burr-Brown	ADC84	
		ADC85	
	Datel	ADC-84	
		ADC-85	
		ADC-87	
		ADC-HX12B	
		ADC-HZ12B	
		ADC-HZ12BGZ	
	HybridSys	ADC581	
		ADC581B	
		HSADC85	
		HSADC85C	
	DDC	ADH-8585-1	
		DDC-5240	
		DDCADC85	
		DDCADC87	
	MicroNet	MN5240	
		MNADC84	
		MNADC85	
		MNADC87	**3203**
ADADC85S	AD	ADADC84	
		ADADC85	
	Burr-Brown	ADC84	
		ADC85	
	Datel	ADC-84	
		ADC-85	
		ADC-87	
		ADC-HX12B	
		ADC-HZ12B	
		ADC-HZ12BGZ	
	HybridSys	ADC581	
		ADC581B	
		HSADC85	
		HSADC85C	
	DDC	ADH-8585-1	
		DDC-5240	
		DDCADC85	
		DDCADC87	
	MicroNet	MN5240	
		MNADC84	
		MNADC85	
		MNADC87	**3203**
ADC71	Burr-Brown	ADC71	
ADC72	Burr-Brown	ADC72	
ADDAC-08	AMD	AM1408	
		DAC-08	
		SSS1408	
	AD	AD1408	
	Datel	DAC-08B	
		DAC-I8BC	
		DAC-IC8B	
		DAC-IC8BC	**3162**
	Fairchild	DAC-08	
		MA0802M	
		μA0801	
		μA0802	
	Hitachi	HA17408	
	Motorola	**DAC-08**	**3630**
		MC1408	
	National	DAC0801	
		DAC0802	
		DAC0806	
ADDAC-08	National	DAC0807	
		DAC0808	
	NEC	μPC624	
	PMI	**DAC-08**	**3637,3639**
		DAC-1408	
	Raytheon	**DAC-08**	**3664**
	Signetics	MC1408	
ADDAC71	Burr-Brown	DAC700	
		DAC701	
		DAC702	
		DAC71	
		DAC72	
	MicroNet	MNDAC71	
ADDAC80	AD	ADDAC85	
		DAC80	
	Burr-Brown	DAC80	
		DAC800	
		DAC85	
		DAC850	
	Datel	DAC-85	
		DAC-85C	
		DAC-HZ12B	
	Harris	HI5685	
	HybridSys	DAC9356	
		HSDAC80	
	MicroNet	**DAC80**	**3204**
		DAC85	
	National	DAC1280	
		DAC1285	
	TeledyneP	TPDAC80	
ADDAC85	AD	ADDAC80	
		DAC80	
	Burr-Brown	DAC80	
		DAC800	
		DAC85	
		DAC850	
	Datel	DAC-85	
		DAC-85C	
		DAC-HZ12B	
	Harris	HI5685	
	HybridSys	DAC9356	
		HSDAC80	
	MicroNet	**DAC80**	**3204**
		DAC85	
	National	DAC1280	
		DAC1285	
	TeledyneP	TPDAC80	
ADDAC87	Burr-Brown	DAC851	
		DAC87	
	Datel	DAC-687	
		DAC-87	
	Harris	HI5687	
	HybridSys	DAC335	
		HSDAC87	
	MicroNet	MNDAC87	
ADG200	Harris	HI200	
	Intersil	**DG200**	**3196**
		IH200	
		IH5200	**3196**
	MicroPwr	MP200	
	PMI	SW05	
	Siliconix	DG200A	
ADG201	Harris	HI201	
	Intersil	DG201	
		IH201	
		IH5201	
	MicroPwr	MP201	
	National	LF11201	
		LF13201	
	PMI	SW201	
	Siliconix	DG201A	
ADS1012	LogicDev	LMU08	
	TRW-LSI	MPY112K	
ADSHC85	**Burr-Brown**	**SHC85**	**3148**
ADSP1008	TRW-LSI	TDC1008	
ADSP1009	LogicDev	LMA1009	
	TRW-LSI	TDC1009	
		TDC2009	
		TMC2009	
ADSP1010	AMD	AM29510	
		AMD29510	
		AMD29L510	
	AD	ADSP1010A	
	Cypress	CY7C510	
	IDT	**IDT7210**	**1084,1088**
	LogicDev	LMA1010	
	MicroPwr	**MP1010**	**688**
	TI	74HCT9510	
		SN74HCT9510	
	TRW-LSI	TDC1010	
		TDC2010	
		TMC2010	
ADSP1010	TRW-LSI	TMC2110	
	Weitek	WTL1010	
		WTL2010	
		WTL2044	
		WTL2245	
ADSP1010A	AMD	AM29510	
		AMD29510	
		AMD29L510	
	AD	ADSP1010	
	Cypress	CY7C510	
	IDT	**IDT7210**	**1084,1088**
	LogicDev	LMA1010	
	MicroPwr	**MP1010**	**688**
	TI	74HCT9510	
		SN74HCT9510	
	TRW-LSI	TDC1010	
		TDC2010	
		TMC2010	
		TMC2110	
	Weitek	WTL1010	
		WTL2010	
		WTL2044	
		WTL2245	
ADSP1012	**IDT**	**IDT7212**	**1087,1088**
	IMI	MPY12IMI	
	LogicDev	LMU12	
	TRW-LSI	MPY0121H	
		MPY012H	
ADSP1016	AMD	AM29516	
		AM29C516	
	Cypress	CY7C516	
	IDT	**IDT7216**	**1086,1088**
	LogicDev	LMU16	
	TRW-LSI	MPY016H	
		MPY016K	
		MPY16HJ	
	Weitek	WTL1016	
		WTL1516	
		WTL2516	
ADSP1080	AMD	AM25S557	
	LogicDev	LMU08	
	TRW-LSI	MPY08HU	
		MPY8UHJ	
ADSP1081	LogicDev	LMU8U	
ADVFC32	**Burr-Brown**	**VFC32**	**3148,3153**
	MCE	MCE-VFC32	
	MicroPwr	MPVFC32	
◆ADX3554	**Burr-Brown**	**3554**	**3150**
	TeledyneP	3554	
DAC80	AD	ADDAC80	
		ADDAC85	
	Burr-Brown	DAC80	
		DAC800	
		DAC85	
		DAC850	
	Datel	DAC-85	
		DAC-85C	
		DAC-HZ12B	
	Harris	HI5685	
	HybridSys	DAC9356	
		HSDAC80	
	MicroNet	**DAC80**	**3204**
		DAC85	
	National	DAC1280	
		DAC1285	
	TeledyneP	TPDAC80	
HDG-0405	**MicroNet**	**MN0405**	**3204**
HDG-0605	**MicroNet**	**MN0605**	**3204**
HDG-0805	AD	MDG	
	Intech	0805H	
HDS1250	DDC	DDC1250	
HTC-0300	AD	HTC0300	
	Burr-Brown	SCH804	
		SHC804	**3148**
	Datel	**SHM4860**	**3163**
	DDC	THA-05203	
	TeledyneP	TP4860	
HTC0300	AD	HTC-0300	
	Burr-Brown	SCH804	
		SHC804	**3148**
	Datel	**SHM4860**	**3163**
	DDC	THA-05203	
	TeledyneP	TP4860	
HTC0300A	**MicroNet**	**MN0300A**	**3205**
		MN376	**3205**
		MN377	
	TeledyneP	4860	
MDG	**AD**	**HDG-0805**	**3115**
	Intech	0805H	
OP-07	AD	AD517	
	Fairchild	UA714	
	Harris	HA-OP07	

(Continued)

◆ Discontinued

The manufacturers report their devices can be used as direct replacements.
Performance details often differ, so compare the specifications considering your requirements.

Analog Devices (Cont'd)

Manufacturer Device	Replacement Source	Device	IC Master Page
OP-07	Harris	HA5130	
		HA5135	
	LinearTech	OP-07	
	Micra	MC0021	
	MicroPwr	MPOP07	
	NEC	UPC264	
	PMI	OP07	
	Raytheon	OP07	
	TI	OP07D	

Analog Systems

Manufacturer Device	Replacement Source	Device	IC Master Page
MA332	Datel	AM-453-2C	
	Exar	**XR5534**	3557
	Raytheon	RC5534	
	Signetics	**NE5534**	3708,3720,3729
		NE5534A	3708,3720,3729
	SSM	SSM2134	
	TI	NE5534	
		NE5534A	
MA333	Fairchild	UA771	
	Motorola	**MC34001**	3616
	NEC	UPC4081	
	TI	TL071	
		TL081C	
MA336	Fairchild	UA772	
	Harris	HA5082	
	Motorola	**MC34002**	3617
	NEC	UPC4082	
	TI	TL072	
		TL082C	
MA374	Fairchild	UA774	
	Motorola	**MC33074**	3618
		MC34004	3618
		MC34004A	
		MC34074	3618
	NEC	UPC4084	
	TI	TL074	
		TL084BC	
MA459	Ferranti	ZN459	
◆TL088	TI	TL088	

Apex Microtechnology

Manufacturer Device	Replacement Source	Device	IC Master Page
PA02	**Elantec**	**ELH0101**	3537
	Maxim	LH0101	
	National	LH0101	
PA07	**Apex**	**PA12**	3525
	Burr-Brown	OPA512	
PA12	**Apex**	**PA07**	3525
	Burr-Brown	OPA512	
PA51	**Burr-Brown**	**OPA501**	3150
PA73	**Burr-Brown**	**3573**	3150
PA83	**Burr-Brown**	**3583**	3149
PA84	**Burr-Brown**	**3584**	3149

AT&T

Manufacturer Device	Replacement Source	Device	IC Master Page
WCM41256	AMD	MCM6256	
	Fujitsu	MB81256	
	Hitachi	HM50256	
		HM50257	
	MicronTech	MT1256	
	Mitsubishi	M5M4256	
		MSM4257	
	Motorola	MCM6256	
		MCM6257	
	NEC	MPD41257	
		µPD41256	
	OKI	M5M37256	
		MSM37256	
		MSM41256	
	Panasonic	MM41256	
	TI	TMS4257	
	Toshiba	TMM41256	
	Samsung	KM1256	

Brooktree

Manufacturer Device	Replacement Source	Device	IC Master Page
Bt444	Intech	VDAC444	
Bt452	Brooktree	RGBDAC4T	
RGBDAC4T	Brooktree	Bt452	

Burr-Brown Corporation

Manufacturer Device	Replacement Source	Device	IC Master Page
OP37	Harris	LF353	
OPA104	AD	AD515	
OPA1100	AD	AD547	
	Harris	HA5170	
	National	LH0052	
	PMI	OP41	
OPA156A	LinearTech	LF156	
		OP-16	
	MicroPwr	MPOP16	
	National	LF156	
	PMI	OP-16	
	ThomsonCSF	LF156	
OPA27	AD	AD510	
		AD517	
	Harris	HAOP27	
	LinearTech	OP27	
		LT1007	
	PMI	OP27	
	Raytheon	OP27	
		RC714	3666
OPA37	Harris	HAOP37	
	LinearTech	OP37	
		LT1037	
	PMI	OP37	
	Raytheon	OP37	
OPA506	AD	AD506	
		AD542	
	National	LH0022	
		LH740A	
		LM0052	
	TeledyneP	1424	
		1425	
OPA511	**Apex**	**PA12**	3525
OPA512	**Apex**	**PA07**	3525
		PA12	3525
OPA606	AD	AD381	
		AD544	
	LinearTech	LF155	
		LT1022	
		LT1055	
		LT1056	
		OP-15	
	National		
		LF155	
	PMI	OP-15	
	ThomsonCSF	LF155	
3500	AMD	LM107	
	AD	**AD741S**	3507
	LinearTech	LM107	
	National	LH741A	
		LM107	
	PMI	PM741	
	Raytheon	RC741	
	SiliconG	SG107	
	TI	**LM107**	718
	ThomsonCSF	LM107	
3501	AD	AD308	
	Burr-Brown	3500	
	Fairchild	µA308	
	Intersil	AD308	
		LM308	3600,3601
	MicroPwr	**MP308**	3607
	Motorola	**LM308**	3615
	National	LM308	
	Raytheon	LM308	
3507	AD	AD509	
	Harris	HA2520	
	TeledyneP	1322	
3508	AD	AD507	
	Datel	AM-462-1	
		AM-462-2	
	Elantec	**EHA2620**	3538
		EHA2622	3538
		EHA2625	3538
	Harris	HA-2620	
		HA-2622	
		HA-2625	
	Intersil	A561	
3522	Harris	HA5280	
3542	AD	AD3542	
3554	TeledyneP	3554	
3573	**Apex**	**PA73**	3525
3583	TeledyneP	1480	
3584	**Apex**	**PA84**	3525
4203	AD	AD530	
		AD533	
	Burr-Brown	**MPY100**	3151
	Intersil	ICL8013	
4205	AD	AD532	
	Burr-Brown	**4213**	3151,3153
		4214	3151
4213	AD	AD532	
	Burr-Brown	**4205**	3151
		4214	3151
4214	AD	AD532	
	Burr-Brown	**4205**	3151
		4213	3151,3153
4341	AD	AD536	
ADC574A	AD	AD574	
	Datel	ADC574A	
	Harris	HI574A	
	HybridSys	HS574	
	MCE	MCE574	
	MicroNet	**MN574A**	3203
	MicroPwr	MP574	
	TeledyneP	TP574A	
ADC674A	Harris	HI674A	
ADC71	AD	ADC71	
ADC72	AD	ADC72	
ADC76	AD	AD376	
ADC80	AD	ADADC80	
	MicroNet	**MNADC80**	3203
ADC82	HybridSys	ADC542	
		HSADC82	
ADC84	AD	ADADC84	
		ADADC85	
		ADADC85S	
	Burr-Brown	ADC85	
	Datel	ADC-84	
		ADC-85	
		ADC-87	
		ADC-HX12B	
		ADC-HZ12B	
		ADC-HZ12BGZ	
	HybridSys	ADC581	
		ADC581B	
		HSADC85	
		HSADC85C	
	DDC	ADH-8585-1	
		DDC-5240	
		DDCADC85	
		DDCADC87	
	MicroNet	MN5240	
		MNADC84	
		MNADC85	
		MNADC87	3203
ADC85	AD	ADADC84	
		ADADC85	
		ADADC85S	
	Burr-Brown	ADC84	
	Datel	ADC-84	
		ADC-85	
		ADC-87	
		ADC-HX12B	
		ADC-HZ12B	
		ADC-HZ12BGZ	
	HybridSys	ADC581	
		ADC581B	
		HSADC85	
		HSADC85C	
	DDC	ADH-8585-1	
		DDC-5240	
		DDCADC85	
		DDCADC87	
	MicroNet	MN5240	
		MNADC84	
		MNADC85	
		MNADC87	3203
DAC700	AD	ADDAC71	
	Burr-Brown	DAC701	
		DAC702	
		DAC71	
		DAC72	
	MicroNet	MNDAC71	
DAC701	AD	ADDAC71	
	Burr-Brown	DAC700	
		DAC702	
		DAC71	
		DAC72	
	MicroNet	MNDAC71	
DAC702	AD	ADDAC71	
	Burr-Brown	DAC700	
		DAC701	
		DAC71	
		DAC72	
	MicroNet	MNDAC71	
DAC71	AD	ADDAC71	
	Burr-Brown	DAC700	
		DAC701	
		DAC702	
		DAC72	
	MicroNet	MNDAC71	
DAC72	AD	ADDAC71	
	Burr-Brown	DAC700	
		DAC701	
		DAC702	
		DAC71	
	MicroNet	MNDAC71	
DAC736	AD	ADAC1136	
DAC80	AD	ADDAC80	
		ADDAC85	
		DAC80	
	Burr-Brown	DAC800	
		DAC85	
		DAC850	
	Datel	DAC-85	
		DAC-85C	
		DAC-HZ12B	
	Harris	HI5685	
	HybridSys	DAC9356	
		HSDAC80	
	MicroNet	**DAC80**	3204
		DAC85	
	National	DAC1280	
		DAC1285	
	TeledyneP	TPDAC80	
DAC800	AD	ADDAC80	
		ADDAC85	
		DAC80	
	Burr-Brown	DAC80	
		DAC85	
		DAC850	
	Datel	DAC-85	
		DAC-85C	
		DAC-HZ12B	
	Harris	HI5685	
	HybridSys	DAC9356	
		HSDAC80	
	MicroNet	**DAC80**	3204
		DAC85	
	National	DAC1280	
		DAC1285	
	TeledyneP	TPDAC80	
DAC85	AD	ADDAC80	
		ADDAC85	
		DAC80	
	Burr-Brown	DAC80	
		DAC800	
		DAC850	
	Datel	DAC-85	
		DAC-85C	
		DAC-HZ12B	
	Harris	HI5685	
	HybridSys	DAC9356	
		HSDAC80	
	MicroNet	**DAC80**	3204
		DAC85	
	National	DAC1280	
		DAC1285	
	TeledyneP	TPDAC80	
DAC85/CCD	National	DAC1287	
DAC850	AD	ADDAC80	
		ADDAC85	
		DAC80	
	Burr-Brown	DAC80	
		DAC800	
		DAC85	
	Datel	DAC-85	
		DAC-85C	
		DAC-HZ12B	
	Harris	HI5685	
	HybridSys	DAC9356	
		HSDAC80	
	MicroNet	**DAC80**	3204
		DAC85	
	National	DAC1280	
		DAC1285	
	TeledyneP	TPDAC80	
DAC851	AD	ADDAC87	
	Burr-Brown	DAC87	
	Datel	DAC-687	
		DAC-87	
	Harris	HI5687	
	HybridSys	DAC335	
		HSDAC87	
	MicroNet	MNDAC87	
DAC87	AD	ADDAC87	
	Burr-Brown	DAC851	
	Datel	DAC-687	
		DAC-87	
	Harris	HI5687	
	HybridSys	DAC335	
		HSDAC87	
	MicroNet	MNDAC87	
INA101	MicroPwr	MPINA101	
MPC16S	**Datel**	**MV-1606**	3163
		MX-1606	3163
	Harris	HI506	

(Continued)

◆ Discontinued

Bold face device numbers indicate manufacturers data is provided in the IC Master on the pages noted.

Burr-Brown Corporation (Cont'd)

Manufacturer Device	Replacement Source	Device	IC Master Page
MPC16S	Intersil	IH6116	
	MicroPwr	MP7506	
	PMI	MUX-16	
	Siliconix	DG506A	
MPC4D	Harris	HI509	
	Intersil	IH6208	
	MicroPwr	MP7509	
		MP7509DI	
	National	LF11509	
		LF13509	
	PMI	MUX-24	
	Siliconix	DG509A	
	TeledyneP	4553	
MPC800	**Datel**	**MX-1616**	**3159,3163**
	Harris	HI516	
MPC801	Harris	HI-518	
MPC8D	AD	AD7507	
	Datel	**MVD-807**	**3163**
		MXD-807	**3163**
	Harris	HI507	
	Intersil	IH6216	
	MicroPwr	MP7507	
	PMI	MUX-28	
	Siliconix	DG507A	
	TeledyneP	4551	
MPC8S	AD	AD7501	
	Datel	MUX808	
		MX-808	**3163**
	Harris	HI508	
	Intersil	IH6108	
	MicroPwr	MP7501	
		MP7508	
	National	LF11508	
		LF13508	
	PMI	DMX-88	
		MUX-08	
		MUX-88	
	Siliconix	DG508A	
	TeledyneP	4554	
MPY100	AD	AD530	
		AD533	
	Burr-Brown	**4203**	**3151**
	Intersil	ICL8013	
MPY534	AD	AD534	
OP27	LinearTech	OP27	
	MicroPwr	MP027	
	PMI	OP27	
	Raytheon	OP-27	
OP37	LinearTech	OP37	
	MicroPwr	MPOP37	
	PMI	OP37	
	Raytheon	OP-37	
OPA103	AD	AD545	
OPA156A	AMD	LF156A	
	AD	AD544	
	Fairchild	LF156A	
	LinearTech	LF156A	
	National	LF156A	
	PMI	PM156A	
	TI	**TL081**	**718**
OPA356A	AMD	LF356A	
	LinearTech	LF356A	
	Motorola	LF356A	
	National	LF356A	
	PMI	PM356A	
OPA501	**Apex**	**PA51**	**3525**
OPA605	OEI	AH0605	
REF10	LinearTech	LT1021	
	MicroPwr	**MPREF-10**	**688,3607**
	PMI	REF-10	
SCH804	AD	HTC-0300	
		HTC0300	
	Burr-Brown	**SHC804**	**3148**
	Datel	**SHM4860**	**3163**
	DDC	THA-05203	
	TeledyneP	TP4860	
SHC298	Datel	SHMLM2	
	National	LF298	
SHC5320	Datel	SHM-20	
	Harris	HA-5320	
	TeledyneP	4866	
SHC804	AD	HTC-0300	
		HTC0300	
	Burr-Brown	SCH804	
	Datel	**SHM4860**	**3163**
	DDC	THA-05203	
	TeledyneP	TP4860	
SHC85	AD	ADSHC85	
VFC32	AD	ADVFC32	
	MCE	MCE-VFC32	
	MicroPwr	MPVFC32	

California Devices

Manufacturer Device	Replacement Source	Device	IC Master Page
HC10000	GouldAMI	UA-5	
HC12600	GouldAMI	UA-6	
HC3100	GouldAMI	UA-1	
HC4100	GouldAMI	UA-2	
HC5400	GouldAMI	UA-3	
HC7700	GouldAMI	UA-4	

Cherry Semiconductor

Manufacturer Device	Replacement Source	Device	IC Master Page
CS117	**SiliconSys**	**SSI117**	**3736**
CS1200	**Exar**	**XR200**	**4615,4618**
CS1300	**Exar**	**XR300**	**4618**
CS1524	**Exar**	**XR1524**	**3558**
	IPS	**IP1524**	**3599**
	LinearTech	LT1524	
	National	LM1524	
	RCA	CA1524	
	SGS	SG1524	
		UC1524A	
	SiliconG	SG1524	
	Sprague	ULS-8124	
	TI	**SG1524**	**720**
	Unitrode	**UC1524A**	**3739,3739**
CS1524A	**IPS**	**IP1524B**	**3599**
CS1525A	**Exar**	**XR1525A**	**3559**
	IPS	**IP1525A**	**3599**
	LinearTech	LT1525A	
	Motorola	**SG1525A**	**3626**
	SGS	SG1524A	
	SiliconG	SG1525A	
	Siliconix	PWM125	
	Sprague	ULS-8125	
	TI	SG1525A	
	Unitrode	**UC1525A**	**3739**
CS1527A	IPS	IP1527A	
	LinearTech	LT1527A	
	Motorola	**SG1527A**	**3626**
	SGS	SG1527A	
	SiliconG	SG1527A	
	Siliconix	PWM27	
	Sprague	ULS-8125	
	TI	SG1527A	
	Unitrode	**UC1527A**	**3739**
CS166	Sprague	ULN-2429	
CS2000	Exar	XRE100	
	Interdesign	MOE	
	MCE	MCE-A20E	
CS250	Dionics	DI250	
CS2500	Exar	XRG100	
	Interdesign	MOG	
	MCE	MCE-A20G	
CS2524	Exar	XR2524	
	IPS	**IP2524**	**3599**
	RCA	CA2524	
	SGS	SG2524	
		UC2524A	
	SiliconG	SG2524	
	Sprague	ULQ-8124	
	TI	SG2524	
	Unitrode	**UC2524A**	**3739,3739**
CS2524A	**IPS**	**IP2524B**	**3599**
CS2525A	Exar	XR2525A	
	IPS	**IP2525A**	**3599**
	LinearTech	LT2525A	
	Motorola	**SG2525A**	**3626**
	SiliconG	SG2525A	
	Siliconix	PWM25B	
	Sprague	ULQ-8125	
	TI	SG2525A	
	Unitrode	**UC2525A**	**3739**
CS2527A	Exar	XR2527A	
	IPS	IP2527A	
	LinearTech	LT2527A	
	Motorola	**SG2527A**	**3626**
	SiliconG	SG2527A	
	TI	SG2527A	
	Unitrode	**UC2527A**	**3739**
CS260	Dionics	DI260	
CS2842A	Cherry	CS3842A	
	Unitrode	**UC2842**	**3739**
CS2907-D14	National	LM2907	
CS2917	**Exar**	**XR2917**	**3552**
	National	LM2917	
CS3000	Exar	XRF100	
	Interdesign	MCF	
		MOF	
	MCE	MCE-A20F	
CS3200	Exar	XRL100	
	Interdesign	MOL	
	MCE	MCE-A20L	
CS3470A	Exar	XR3470	
	Motorola	MC3470	
CS3471	Motorola	MC3471	
	TI	MC3471	
CS3524	**Exar**	**XR3524**	**3558**
	IPS	**IP3524**	**3599**
		IP3524B	**3599**
	National	LM3524	
	RCA	CA3524	
	SGS	SG3524	
		UC3524A	
	Signetics	**SG3524**	**3715,3720,3730**
	SiliconG	SG3524B	
	Sprague	ULN-8124	
	TI	SG3524	
	Unitrode	**UC3524A**	**3739,3739**
CS3524A	**IPS**	**IP3524B**	**3599**
CS3525A	**IPS**	**IP3525A**	**3599**
CS3527	Cherry	CS3527A	
	Exar	**XR3527A**	**3559**
	IPS	**IP3527**	**3599**
	LinearTech	LT3527A	
	Motorola	**SG3527A**	**3626**
	SGS	SG3527A	
	SiliconG	SG3527A	
	TI	SG3527A	
CS3527A	Cherry	CS3527	
	Exar	**XR3527A**	**3559**
	IPS	**IP3527**	**3599**
	LinearTech	LT3527A	
	Motorola	**SG3527A**	**3626**
	SGS	SG3527A	
	SiliconG	SG3527A	
	TI	SG3527A	
CS3842A	Cherry	CS2842A	
	Unitrode	**UC2842**	**3739**
CS4000	Interdesign	ADVFC32	
CS494M	**Exar**	**XR494**	**3557**
	Fairchild	μA494	
	IPS	**IP494A**	**3599**
	Motorola	TL494	
	Sprague	ULN8194A	
		ULS-8194	
	TI	**TL494M**	**720**
		TL594M	**720**
	Unitrode	**UC494A**	**3739,3739**
◆CS555	Exar	XR555	
	Fairchild	μA555	
	Hitachi	HA17555	
	Intersil	NE555	
	Mitsubishi	M51841	
		M51848	
		M5251	
		M5E555	
	Motorola	MC1455	
	NEC	μPC1555	
	Raytheon	RC555	
	RCA	CA555	
	Sanyo	LB8555	
	SGS	NE555	
	Signetics	**NE555**	**3721**
		NE555N	
	TI	NE555	
	ThomsonCSF	LM555	
	Samsung	**NE555**	**3679**
CS5560	**Signetics**	**NE5560**	**3713,3730**
CS5560N	**IPS**	**IP5560C**	**3599**
	Signetics	**NE5560**	**3713,3730**
CS5560S	**IPS**	**IP5560**	**3599**
CS5561	Cherry	CS5561N	
	IPS	**IP5561C**	**3599**
	Signetics	**NE5561**	**3713,3730**
	Sprague	ULN-8161	
CS5561N	Cherry	CS5561	
	IPS	**IP5561C**	**3599**
	Signetics	**NE5561**	**3713,3730**
	Sprague	ULN-8161	
CS5561S	**IPS**	**IP5561**	**3599**
	Signetics	**SE5561**	**3713,3730**
	Sprague	ULS-8161	
CS593	TI	TL593	
CS594	**Fujitsu**	**MB3759**	**1611**
	IPS	IP494	
	Sprague	ULN-8194	
	TI	**TL494M**	**720**
		TL594M	**720**
	Unitrode	**UC494A**	**3739,3739**
CS594C	IPS	IP494AC	
CS595	**Fujitsu**	**MB3760**	**1611**
	Sprague	ULN-8195	
CS8204	Mitel	ML8204	
	Plessey	MV8204	
	Samsung	ML8204	
CS8205	Exar	XRT8205	
	Mitel	ML8205	
	Samsung	ML8205	

(Continued)

Circuit Technology Inc.

Manufacturer Device	Replacement Source	Device	IC Master Page
52981	Mostek	MK50981	
	National	TP50981	
	Samsung	MK50981	
54HC273	**Motorola**	**MC54HC273**	**1126**
	RCA	**CD54HC273**	**1149**
	Signetics	54HC273	
	TI	**SN54HC273**	**714**
54HCT137	**RCA**	**CD54HCT137**	**1150**
	Supertex	54HCT137	
	TI	**SN54HCT137**	**714**
54HCT138	IDT	IDT54HCT138	
	Mitel	MD54HCT138	
	Motorola	MC54HCT138	
	SPI	SP54HCT138	
	Signetics	54HCT138	
	SSS	SS54HCT138	
	TI	**SN54HCT138**	**714**
54HCT139	IDT	IDT54HCT139	
	Mitel	MD54HCT139	
	RCA	**CD54HCT139**	**1150**
	SPI	SP54HCT139	
	Signetics	54HCT139	
	SSS	SS54HCT139	
54HCT237	**RCA**	**CD54HCT237**	**1150**
	Supertex	54HCT237	
	TI	**SN54HCT237**	**714**
54HCT238	**RCA**	**CD54HCT238**	**1150**
	Signetics	54HCT238	
	SSS	SS54HCT238	
	TI	**SN54HCT238**	**714**
54HCT240	Mitel	MD54HCT240	
	Motorola	MC54HCT240	
	National	MM54HCT240	
	RCA	**CD54HCT240**	**1149**
	SPI	SP54HCT240	
	Supertex	SI54HCT240	
	TI	**SN54HCT240**	**714**
54HCT241	Mitel	MD54HCT241	
	Motorola	MC54HCT241	
	National	MM54HCT241	
	RCA	**CD54HCT241**	**1149**
	SPI	SP54HCT241	
	Signetics	54HCT241	
	SSS	SS54HCT241	
	Supertex	SI54HCT241	
	TI	**SN54HCT241**	**714**
54HCT244	Mitel	MD54HCT244	
	Motorola	MC54HCT244	
	National	MM54HCT244	
	RCA	**CD54HCT244**	**1149**
	SPI	SP54HCT244	
	Signetics	54HCT244	
	SSS	SS54HCT244	
	Supertex	SI54HCT244	
	TI	**SN54HCT244**	**714**
54HCT245	Mitel	MD54HCT245	
	Motorola	MC54HCT245	
	RCA	**CD54HCT245**	**1149**
	SPI	SP54HCT245	
	Signetics	54HCT245	
	SSS	SS54HCT245	
	TI	**SN54HCT245**	**714**
54HCT373	Mitel	MD54HCT343	
		MD54HCT373	
	Motorola	MC54HCT373	
	National	MM54HCT373	
	RCA	**CD54HCT373**	**1150**
	SPI	SP54HCT373	
	Signetics	54HCT373	
	SSS	SS54HCT373	
	Supertex	SI54HCT373	
	TI	**SN54HCT373**	**714**
54HCT374	Mitel	MD54HCT374	
	Motorola	MC54HCT374	
	National	MM54HCT374	
	RCA	**CD54HCT374**	**1149**

(Continued)

◆ Discontinued

The manufacturers report their devices can be used as direct replacements.
Performance details often differ, so compare the specifications considering your requirements.

Circuit Technology Inc. (Cont'd)

Manufacturer Device	Replacement Source	Device	IC Master Page
54HCT374	SPI	SP54HCT374	
	SSS	SS54HCT374	
	Supertex	SI54HCT374	
	TI	**SN54HCT374**	**714**
54HCT533	Motorola	MC54HCT533	
	RCA	**CD54HCT533**	**1150**
	Signetics	54HCT533	
	SSS	SS54HCT533	
54HCT534	Motorola	MC54HCT534	
	RCA	**CD54HCT534**	**1149**
	SSS	SS54HCT534	
54HCT540	Mitel	MD54HCT540	
	Motorola	MC54HCT540	
	RCA	**CD54HCT540**	**1149**
	SPI	SP54HCT540	
	Signetics	54HCT540	
	SSS	SS54HCT540	
	TI	**SN54HCT540**	**714**
54HCT541	Mitel	MD54HCT541	
	Motorola	MC54HCT541	
	RCA	**CD54HCT541**	**1149**
	SPI	SP54HCT541	
	Signetics	54HCT541	
	SSS	SS54HCT541	
	TI	**SN54HCT541**	**714**
54HCT563	**RCA**	**CD54HCT563**	**1150**
	Signetics	54HCT563	
	SSS	SS54HCT563	
54HCT564	**RCA**	**CD54HCT564**	**1149**
	Signetics	54HCT564	
	SSS	SS54HCT564	
	Zytrex	ZX74HCT564-2	
54HCT573	Mitel	MD54HCT573	
	RCA	**CD54HCT573**	**1150**
	SPI	SP54HCT573	
	Signetics	54HCT573	
	SSS	SS54HCT573	
54HCT574	Mitel	MD54HCT574	
	RCA	**CD54HCT574**	**1149**
	SPI	SP54HCT574	
	Signetics	54HCT574	
	SSS	SS54HCT574	
74HC273	Hitachi	HD74HC273	
	Motorola	**MC74HC273**	**1126**
	Nitron	NC74HC273	
	RCA	**CD74HC273**	**1149**
	SPI	SP74HC273	
	SGS	M74HC273	
	Signetics	**74HC273**	**1158**
	TI	SN74HC273	
	Universal	US74HC273	
74HCT137	MicroTech	74HCT137 74HCTR137	
	SGS	M74HCT137	
	Supertex	74HCT137	
	TI	SN74HCT137	
	Toshiba	**TC74HCT137**	**1363**
	Universal	US74HCT137	
74HCT138	IDT	IDT74HCT138	
	Mitel	MD74HCT138	
	Motorola	MC74HCT138	
	Nitron	NC74HCT138	
	Plessey	MV74HCT138	
	RCA	**CD74HCT138**	**1150**
	SPI	SP74HCT138	
	SGS	M74HCT138	
	Signetics	**74HCT138**	**1157**
	SSS	SS74HCT138	
	TI	SN74HCT138	
	Toshiba	**TC74HCT138**	**1363**
	Zytrex	ZX74HCT138-2	
74HCT139	Nitron	NC74HCT273	
	RCA	**CD74HCT139** CD74HCT273	**1150**
	Signetics	**74HCT273**	**1158**
	SSS	SS74HCT139	
	Universal	US74HCT273	
74HCT238	Plessey	MV74HCT238	
	RCA	**CD74HCT238**	**1150**
	Signetics	**74HCT238**	**1157**
	SSS	SS74HCT238	
	TI	SN74HCT238	
74HCT240	Hitachi	HD74HCT240	
	Micrel	MIC74HCT240	
	MicroTech	74HCTR240	
	Mitel	MD74HCT240	
	Motorola	MC74HCT240	
	National	MM74HCT240	
	Nitron	NC74HCT240	
	Plessey	MV74HCT240	
	RCA	**CD74HCT240**	**1149**
	SPI	SP74HCT240	
	SGS	M74HCT240	
	Signetics	**74HCT240**	**1157**
	SSS	SS74HCT240	
	Supertex	SI74HCT240	
	TI	SN74HCT240	
	Toshiba	**TC74HCT240**	**1363**
	Universal	US74HCT240	
	Zytrex	ZX74HCT240-2	
74HCT241	Hitachi	HD74HCT241	
	Micrel	MIC74HCT241	
	MicroTech	74HCTR241	
	Mitel	MD74HCT241	
	Motorola	MC74HCT241	
	National	MM74HCT241	
	Nitron	NC74HCT241	
	Plessey	MV74HCT241	
	RCA	**CD74HCT241**	**1149**
	SPI	SP74HCT241	
	SGS	M74HCT241	
	Signetics	**74HCT241**	**1157**
	SSS	SS74HCT241	
	Supertex	SI74HCT241	
	TI	SN74HCT241	
	Toshiba	**TC74HCT241**	**1363**
	Universal	US74HCT241	
	Zytrex	ZX74HCT241-2	
74HCT244	Hitachi	HD74HCT244	
	Micrel	MIC74HCT244	
	MicroTech	74HCTR244	
	Mitel	MD74HCT244	
	Motorola	MC74HCT244	
	National	MM74HCT244	
	Nitron	NC74HCT244	
	Plessey	MV74HCT244	
	RCA	**CD74HCT244**	**1149**
	SPI	SP74HCT244	
	SGS	M74HCT244	
	Signetics	**74HCT244**	**1158**
	SSS	SS74HCT244	
	Supertex	SI74HCT244	
	TI	SN74HCT244	
	Toshiba	**TC74HCT244**	**1363**
	Universal	US74HCT244	
	Zytrex	ZX74HCT244-2	
74HCT245	GTEMicro	G74SC245	
	Hitachi	HD74HCT245	
	Micrel	MIC74HCT245	
	MicroTech	74HCTR245	
	Mitel	MD74HCT245	
	Motorola	MC74HCT245	
	National	MM74HCT245	
	Plessey	MV74HCT245 MV74SC245	
	RCA	**CD74HCT245**	**1149**
	SPI	SP74HCT245	
	SGS	M74HCT245	
	Signetics	**74HCT245**	**1158**
	SSS	SS74HCT245	
	TI	SN74HCT245	
	Toshiba	**TC74HCT245**	**1363**
	Universal	US74HCT245	
74HCT373	GTEMicro	G74SC373	
	Hitachi	HD74HCT373	
	Micrel	MIC74HCT373	
	MicroTech	74HCTR373	
	Mitel	MD74HCT373	
	Motorola	MC74HCT373	
	National	MM74HCT373	
	Nitron	NC74HCT373	
	Plessey	MV74HCT373 MV74SC373	
	RCA	**CD74HCT373**	**1150**
	SPI	SP74HCT373	
	SGS	M74HCT373	
	Signetics	**74HCT373**	**1158**
	SSS	SS74HCT373	
	Supertex	SI74HCT373	
	TI	SN74HCT373	
	Toshiba	**TC74HCT373**	**1363**
	Universal	US74HCT373	
	Zytrex	ZX74HCT373-2	
74HCT374	GTEMicro	G74SC374	
	Hitachi	HD74HCT374	
	Micrel	MIC74HCT374	
	MicroTech	74HCTR374	
	Mitel	MD74HCT374	
	Motorola	MC74HCT374	
	National	MM74HCT374	
	Nitron	NC74HCT374	
	Plessey	MV74HCT374 MV74SC374	
	RCA	CD74HCT374	
	SPI	SP74HCT374	
	SGS	M74HCT374	
	Signetics	**74HCT374**	**1158**
	SSS	SS74HCT374	
	Supertex	SI74HCT374	
	TI	SN74HCT374	
	Toshiba	**TC74HCT374**	**1363**
	Universal	US74HCT374	
	Zytrex	ZX74HCT374-2	
74HCT533	Hitachi	HD74HCT533	
	Micrel	MIC74HCT533	
	MicroTech	74HCTR533	
	Motorola	MC74HCT533	
	Plessey	MV74HCT533	
	RCA	**CD74HCT533**	**1150**
	Signetics	**74HCT533**	**1159**
	SSS	SS74HCT533	
	TI	SN74HCT533	
	Universal	US74HCT533	
	Zytrex	ZX74HCT533	
74HCT534	Hitachi	HD74HCT534	
	Micrel	MIC74HCT534	
	MicroTech	74HCTR534	
	Motorola	MC74HCT534	
	Plessey	MV74HCT534	
	RCA	CD74HCT534	
	Signetics	**74HCT534**	**1159**
	SSS	SS74HCT534	
	TI	SN74HCT534	
	Universal	US74HCT534	
	Zytrex	ZX74HCT534-2	
74HCT540	Hitachi	HD74HCT540	
	Micrel	MIC74HCT540	
	MicroTech	74HCTR540	
	Mitel	MD74HCT540	
	Motorola	MC74HCT540	
	Plessey	MV74HCT540	
	RCA	**CD74HCT540**	**1149**
	SPI	SP74HCT540	
	SGS	M74HCT540	
	Signetics	**74HCT540**	**1159**
	SSS	SS74HCT540	
	TI	SN74HCT540	
	Toshiba	**TC74HCT540**	**1363**
	Universal	US74HCT540	
	Zytrex	ZX74HCT540-2	
74HCT541	Hitachi	HD74HCT541	
	Micrel	MIC74HCT541	
	MicroTech	74HCTR541	
	Mitel	MD74HCT541	
	Motorola	MC74HCT541	
	Plessey	MV74HCT541	
	RCA	**CD74HCT541**	**1149**
	SPI	SP74HCT541	
	SGS	M74HCT541	
	Signetics	**74HCT541**	**1159**
	SSS	SS74HCT541	
	TI	SN74HCT541	
	Toshiba	**TC74HCT541**	**1363**
	Universal	US74HCT541	
	Zytrex	ZX74HCT541-2	
74HCT563	Hitachi	HD74HCT563	
	Micrel	MIC74HCT563	
	MicroTech	74HCTR563	
	Motorola	MC74HCT563	
	Plessey	MV74HCT563	
	RCA	**CD74HCT563**	**1150**
	SGS	M74HCT563	
	Signetics	**74HCT563**	**1159**
	SSS	SS74HCT563	
	TI	SN74HCT563	
	Toshiba	**TC74HCT563**	**1363**
	Universal	US74HCT563	
74HCT564	Hitachi	HD74HCT564	
	Micrel	MIC74HCT564	
	MicroTech	74HCTR564	
	Motorola	MC74HCT564	
	Plessey	MV74HCT564 MV74HCT573	
	RCA	CD74HCT564	
	SGS	M74HCT564	
	Signetics	**74HCT564**	**1159**
	SSS	SS74HCT564	
	TI	SN74HCT564	
	Toshiba	**TC74HCT564**	**1363**
	Universal	US74HCT564	
74HCT573	Hitachi	HD74HCT573	
	Micrel	MIC74HCT573	
	MicroTech	74HCTR573	
	Mitel	MD74HCT573	
	Motorola	MC74HCT573	
	RCA	**CD74HCT573**	**1150**
	SPI	SP74HCT573	
	SGS	M74HCT573	
	Signetics	**74HCT573**	**1159**
	SSS	SS74HCT573	
	TI	SN74HCT573	
	Toshiba	TC74HCT573	
	Universal	US74HCT573	
74HCT574	Hitachi	HD74HCT574	
	MicroTech	74HCTR574	
	Mitel	MD74HCT574	
	Motorola	MC74HCT574	
	Plessey	MV74HCT574	
	RCA	CD74HCT574	
	SPI	SP74HCT574	
	SGS	M74HCT574	
	Signetics	**74HCT574**	**1159**
	SSS	SS74HCT574	
	TI	SN74HCT574	
	Toshiba	**TC74HCT574**	**1363**
	Universal	US74HCT574 US75HCT574	
CT-1487D	DDC	BUS-63125	
CT-1487DI	DDC	BUS-63135	
CT-1487M	DDC	BUS-63105	
CT-1487MI	DDC	BUS-63115	
CT-1589D	DDC	BUS-63127	
CT-1589DI	DDC	BUS-63137	
CT-1589MI	DDC	BUS-63117	
CT-3231	CTI	CT-3232	
	DDC	BUS-63102 BUS-8554	
CT-3232	CTI	CT-3231	
	DDC	BUS-63102 BUS-8554	
MA556	Fairchild	5156	
	Mostek	MK5156	
	National	TP5156	
	SGS	M5156	

Commodore Semiconductor Group

Manufacturer Device	Replacement Source	Device	IC Master Page
◆MP6551	GouldAMI	S6551	
	National	6551	
	RCA	1822	
	Rockwell	R6551	
	Toshiba	5101	
◆MPS2332	AMD	AM9232	
	Fairchild	F3532	
	GI	R03-9332	
	GouldAMI	S2333 S68A332	
	GTEMicro	G2332	
	Hitachi	HN46332	
	Intech	IM7332	
	Intel	2332	
	Mitsubishi	M58333	
	Motorola	**MCM68A332**	**4120**
	National	NM52132	
	NCR	NCR2332	
	NEC	UPD2332A	
	Panasonic	MN2332	
	RCA	**CDM5333**	**1673,1677**
	Rockwell	R2332	
	SGS	M2332	
	Sharp	LH2332	
	Siemens	SA88332 SAB8332	
	Signetics	2332 2632A	
	SiliconG	SG3532	
	SSS	SCM23C32	
	SMC	ROM4732	
	Supertex	23SC32 CM3200	
	TI	TM2332 TMS2332 TMS4732	
	Toshiba	TMM2332 TMM333P	
	VTI	VT2332	
◆MPS2333	Amperex	AM9233	
	Fairchild	F3533	
	GI	R03-9333	
	GouldAMI	S2333	
	NEC	UPD23328	

(Continued)

◆ Discontinued

Bold face device numbers indicate manufacturers data is provided in the IC Master on the pages noted.

Commodore Semiconductor Group (Cont'd)

Manufacturer Device	Replacement Source	Device	IC Master Page
◆MPS2333	**RCA**	**CDM5332**	**1673,1677,1678**
	Signetics	2332	
	SSS	SCM23C33	
	Supertex	23C32	
	Toshiba	TMM2332	
	Universal	UM2333	
◆MPS6502	Rockwell	R6502	
◆MPS6507	Rockwell	R6507	
◆MPS6512	Rockwell	R6512	
◆MPS6522	Rockwell	R6522	
◆MPS6532	Rockwell	R6532	
◆MPS6551	GouldAMI	S6551	
	National	6551	
	RCA	1822	
	Rockwell	R6551	
	Toshiba	5101	

Cypress Semiconductor

Manufacturer Device	Replacement Source	Device	IC Master Page
CY2147	Cypress	CY7C147	
	Hitachi	HM6147	
	Intel	2141	
		2147	
		2147-3	
	Motorola	MCM6147	
		MCM61L47	
	National	MM2147	
		NMC2141	
	NEC	MPD2147	
	OKI	MSM5104	
	TI	TMS2147	
	Toshiba	TMM3150	
	UMC	UM2147	
CY2148	AMD	AM2148	
		AM2149	
	Cypress	CY2149	
		CY7C148	
		CY7C149	
	Intel	2148H	
		2149H	
	National	NMC2148	
	NEC	UPD2149	
	ThomsonCSF	ET2148	
	UMC	UM2148	
		UM2149	
CY2149	AMD	AM2148	
		AM2149	
	Cypress	CY2148	
		CY7C148	
		CY7C149	
	Intel	2148H	
		2149H	
	National	NMC2148	
	NEC	UPD2149	
	ThomsonCSF	ET2148	
	UMC	UM2148	
		UM2149	
CY21L48	AMD	AM21L48	
	Cypress	CY7C148	
CY27S03	AMD	AM27LS03	
		AM27S03	
		SN74S189	
	Cypress	CY74S189	
		CY7C189	
		CY7CS189	
	Fairchild	74S189	
		93405	
	National	DM74S189	
		DM7599	
		DM8599	
	TI	SN74S189B	
CY27S07	AMD	AM27S07	
	Cypress	CY7C190	
CY2901	AMD	AM2901	
CY2909	AMD	AM2909	
	Cypress	CY7C909	
CY2911	AMD	AM2911	
	Cypress	CY7C911	
CY7C122	AMD	AM93422	
	Fairchild	93422	
	Motorola	MCM93422	
CY7C128	AMD	AM9128	
		AM9218	
	Fujitsu	MB8128	
		MB8416	
	Harris	HM6116	
		HM6516	
CY7C128	IDT	IDT6116	
	Intel	2128	
	MicroPwr	MP6116	
	Mitsubishi	M58275	
		M5M116	
		M5M5116	
		M5M5117	
		M5M5118	
		MS8725	
	Motorola	MCM2016	
		MCM2016H	
		MCM2128	
		MCM6116	**4119**
		MCM61L16	**4119**
		MCM65116	
	National	MMC2116	
	NEC	μPD4016	
	OKI	MSM2128	
		MSM5128	**4732,4733**
	RCA	MWS6116A	
	SSS	883C21C16	
		BCM21C16	
		SCM21C16	
		SCM6116	
	TI	TMS4016	
	ThomsonCSF	ET2128	
	Toshiba	**TC5516A**	**4263**
		TMM2015A	
		TMM2016	
		TMM2016A	**4263**
	Samsung	KM6816	
	UMC	UM2128	
	Universal	US574HC133	
CY7C147	Cypress	CY2147	
	Hitachi	HM6147	
	Intel	2141	
		2147	
		2147-3	
	Motorola	MCM6147	
		MCM61L47	
	National	MM2147	
		NMC2141	
	NEC	MPD2147	
	OKI	MSM5104	
	TI	TMS2147	
	Toshiba	TMM3150	
	UMC	UM2147	
CY7C161	Fairchild	F100183	
	Hitachi	HD100183	
	IDT	IDT71981	
CY7C162	**Fairchild**	**F100415**	**4014**
	Hitachi	HM100415	
	IDT	IDT71982	
CY7C164	Hitachi	HD74HC595	
	Inmos	IMS1620	
	Motorola	MC74HC595	
	NEC	MPD4362	
	SGS	M74HC595	
	TI	SN74HC595	
	Universal	US74HC595	
CY7C166	Fairchild	F100182	
	Hitachi	HD100182	
	IDT	IDT7198	
CY7C167	AMD	AM2167	
	Fujitsu	MB8167A	
		MB81C67	
	Harris	HM65262	
	Hitachi	HM6167	
		HM6167H	
		HM6267	
	Inmos	IMS1400	
		IMS1403	**4042**
	IDT	IDT6167	
	Intel	51C67	
	Mitsubishi	M5M2167	
	Motorola	MCM2167H	
	NEC	UPD2167	
CY7C171	IDT	IDT71681	
	RCA	**CD74HC4518**	**1150**
	SGS	M74HC4518	
	Signetics	PC74HC4518	
CY7C172	IDT	IDT71682	
	Motorola	**MC74HC4543**	**1130**
	National	MM74HC4543	
	RCA	**CD74HC4543**	**1150**
	SGS	M74HC4543	
	Signetics	PC74HC4543	
	Toshiba	**TC74HC4543**	**1363**
	Universal	US74HC4543	
CY7C186	AMD	AM9988	
		AM9988C	
CY7C186	Fujitsu	MB8464	
		MB8464A	
	Hitachi	HM6264	
		HM6464	
	IDT	IDT7188	
		IDT7M864	
	Mitsubishi	M5M5165	
	Motorola	MCM6164	
	NEC	μPD4364	
		μPD4464	
	OKI	MSM5164	
		MSM5165	
	RCA	CDM6264	
	S-MOS	SRM2064	
		SRM2264	**4177,4178**
	Sharp	LH5164	
	Toshiba	TC5564	
		TC5565	
		TMM2063	
		TMM2064	
	Samsung	KM6264	
CY7C187	Fairchild	F1600	
	Hitachi	HM6287	
		HM6787	**4035**
	Inmos	IMS1600	
	IDT	IDT7187	
	Motorola	MCM6287	
	NEC	MPD4361	
	RCA	**CD74HC4515**	**1150**
	SGS	M74HC4515	
	Signetics	PC74HC4515	
	Toshiba	TC5561	
		TC5562	
CY7C235	AMD	AM27S35	
		AM27S37	
	Fujitsu	MB7232	
	MMI	53RA881	
		63RA881	
		63RS881	**4101,4103**
	Motorola	MCM27S35	
	National	DM87SR181	
CY7C245	AMD	AM27S45	
		AM27S47	
	MMI	**63RA1681**	**4101,4103,4107**
CY7C264	AMD	27S49	
		AM27S49	
	Fairchild	32Z565	
		93565	
	Fujitsu	7144H	
		MB7144	
	Harris	76641	
	Raytheon	**29VP864**	**4137**
	Signetics	82641	
CY7C282M	AMD	AM27S181M	
	Fairchild	932451	
		93451	
	Fujitsu	MB7132	
	Harris	7681	
	Hitachi	HN25089	
	MMI	5381-1	
		6381	**4102**
		6381-1	
	Motorola	**MCM7681**	**4124**
	National	DM77S181	
		DM77S281	
		DM87S281	
	Raytheon	29631AM	
		29632	
	Signetics	82S181	
		NS82HS195	
		S82HS181	
		S82S181	
	TI	28S86	
		TBP28S86AM	
CY7C401	**Fairchild**	**74F413**	**1027**
	MMI	**57401**	**691**
	National	DM77S401	
CY7C510	Fairchild	F100180	
	Hitachi	HD100179	
		HD100180	
	Signetics	**100180**	**1173,1174**
	TRW-LSI	TMC2010	
CY7C517	AMD	AM29517	
	IDT	7217	
	LogicDev	LMU17	
	Weitek	WTL2517	
CY7C901	Fairchild	μA2901	
		μA3302	
	Motorola	**LM2901**	**3631**
CY7C901	**Motorola**	**MC3302**	**3631**
	National	LM2901	
		LM3302	
	NEC	μPC2901	
	PMI	CMP-04	
	Raytheon	LM2901	
		RC3302	
	RCA	CA3302	
	SGS	LM2901	
		MC3302	
	Signetics	**LM2901**	**3721,3722**
		MC3302	**3721**
	SiliconG	SG324A	
	TI	LM2901	
		LM3302	
	ThomsonCSF	LM2901	
CY7C909	AMD	AM2909	
	Cypress	CY2909	
CY7C911	AMD	AM2911	
	Cypress	CY2911	
CY7CS189	AMD	AM27LS03	
		AM27S03	
		SN74S189	
	Cypress	CY27S03	
		CY74S189	
		CY7C189	
	Fairchild	74S189	
		93405	
	National	DM74S189	
		DM7599	
		DM8599	
	TI	SN74S189B	
CY9122	AMD	AM9122	
	Cypress	CY7C122	
CY9150	AMD	AM9150	
	Cypress	CY7C150	
CYPAL16L8	MMI	PAL16L8	
		PAL16L8A	
	TI	**PAL16L8A**	**725**
		TIBPAL16L8-20	
CYPAL16R4	AMD	AMPAL16R4	
	MMI	PAL16R4	
		PAL16R4A	
	National	PAL16R4	
	TI	**PAL16R4A**	**725**
		TIBPAL16R4-20	
		TIBPAL16R4-25	**725,4759**
		TIBPAL16R4-30	
CYPAL16R6	AMD	AMPAL16R6	
	MMI	PAL16R6	
		PAL16R6A	
	National	PAL16R6	
	TI	**PAL16R6A**	**725**
		TIBPAL16R6-20	
		TIBPAL16R6-25	**725,4759**
		TIBPAL16R6-30	
CYPAL16R8	MMI	PAL16R8	
		PAL16R8A	
	TI	SN74PAL16R8A	
		TIBPAL16R8-20	
		TIBPAL16R8-25	**725,4759**
		TIBPAL16R8-30	
PAL20L10	MMI	PAL20L10	
	National	PAL20L10	
PAL20L8	Fairchild	F100165	
	Hitachi	HD100165	
	MMI	PAL20L8	
	Signetics	**100165**	**1173,1174**
PAL20R4	Fairchild	F100179	
	MMI	PAL20R4	
PAL20R6	Fairchild	F100170	
	Hitachi	HD100170	
	MMI	PAL20R6	
	Signetics	**100170**	**1173,1174**
PAL20R8	Fairchild	F100166	
	Hitachi	HD100166	
	MMI	PAL20R8	
PALC22U10	AMD	AMPAL22V10	
	MMI	PAL14L8	
	National	PAL14L8	

Data Device Corporation

Manufacturer Device	Replacement Source	Device	IC Master Page
ADC-00401	MicroNet	MN5243	
ADH-030-11	HyComp	HC4000	
ADH-030-12	HyComp	HC4000	
ADH-030-13	HyComp	HC4000	
ADH-050	**MicroNet**	**MN050**	**3205**

◆ Discontinued

The manufacturers report their devices can be used as direct replacements.
Performance details often differ, so compare the specifications considering your requirements.

Data Device Corporation (Cont'd)

Manufacturer Device	Replacement Source	Device	IC Master Page
ADH-8585-1	AD	ADADC84	
		ADADC85	
		ADADC85S	
	Burr-Brown	ADC84	
		ADC85	
	Datel	ADC-84	
		ADC-85	
		ADC-87	
		ADC-HX12B	
		ADC-HZ12B	
		ADC-HZ12BGZ	
	HybridSys	ADC581	
		ADC581B	
		HSADC85	
		HSADC85C	
	DDC	DDC-5240	
		DDCADC85	
		DDCADC87	
	MicroNet	MN5240	
		MNADC84	
		MNADC85	
		MNADC87	**3203**
ADH030	HybridSys	DAC397-12	
	HyComp	DA4000	
◆ADH85101	**Datel**	**ADC-5101**	**3160,3162**
	DDC	DDC-5101	
	MicroNet	MN5101	
◆ADH8585	AD	ADADC84	
		ADADC85	
		ADADC85S	
	Burr-Brown	ADC84	
		ADC85	
	Datel	ADC-84	
		ADC-85	
		ADC-87	
		ADC-HX12B	
		ADC-HZ12B	
		ADC-HZ12BGZ	
	HybridSys	ADC581	
		ADC581B	
		HSADC85	
		HSADC85C	
	DDC	ADH-8585-1	
		DDC-5240	
		DDCADC85	
		DDCADC87	
	MicroNet	MN5240	
		MNADC84	
		MNADC85	
		MNADC87	**3203**
BUS-63102	CTI	CT-3231	
		CT-3232	
	DDC	BUS-8554	
BUS-63105	CTI	CT-1487M	
BUS-63115	CTI	CT-1487MI	
BUS-63117	CTI	CT-1589MI	
BUS-63125	CTI	CT-1487D	
BUS-63127	CTI	CT-1589D	
BUS-63135	CTI	CT-1487DI	
BUS-63137	CTI	CT-1589DI	
BUS-8554	CTI	CT-3231	
		CT-3232	
	DDC	BUS-63102	
DAC-SL	AD	AD3860	
	HybridSys	HS3860	
	MicroNet	**MN3860**	**3204**
◆DAC8528	TeledyneP	4058	
DDC-5101	**Datel**	**ADC-5101**	**3160,3162**
	MicroNet	MN5101	
DDC-5210	AD	AD5210	
	Datel	**ADC-5210**	**3160,3162**
	MicroNet	**MN5210**	**3203**
DDC-5211	AD	AD5211	
	Datel	**ADC-5211**	**3160,3162**
	MicroNet	MN5211	
DDC-5212	AD	AD5212	
	Datel	**ADC-5212**	**3160,3162**
	MicroNet	MN5212	
DDC-5216	**Datel**	**ADC-5216**	**3160,3162**
	HybridSys	HS5216	
	MicroNet	MN5216	
DDC-5240	AD	ADADC84	
		ADADC85	

(Continued)

Manufacturer Device	Replacement Source	Device	IC Master Page
DDC-5240	AD	ADADC85S	
	Burr-Brown	ADC84	
		ADC85	
	Datel	ADC-84	
		ADC-85	
		ADC-87	
		ADC-HX12B	
		ADC-HZ12B	
		ADC-HZ12BGZ	
	HybridSys	ADC581	
		ADC581B	
		HSADC85	
		HSADC85C	
	DDC	ADH-8585-1	
		DDCADC85	
		DDCADC87	
	MicroNet	MN5240	
		MNADC84	
		MNADC85	
		MNADC87	**3203**
DDC1250	AD	HDS1250	
DDCADC85	AD	ADADC84	
		ADADC85	
		ADADC85S	
	Burr-Brown	ADC84	
		ADC85	
	Datel	ADC-84	
		ADC-85	
		ADC-87	
		ADC-HX12B	
		ADC-HZ12B	
		ADC-HZ12BGZ	
	HybridSys	ADC581	
		ADC581B	
		HSADC85	
		HSADC85C	
	DDC	ADH-8585-1	
		DDC-5240	
		DDCADC87	
	MicroNet	MN5240	
		MNADC84	
		MNADC85	
		MNADC87	**3203**
DDCADC87	AD	ADADC84	
		ADADC85	
		ADADC85S	
	Burr-Brown	ADC84	
		ADC85	
	Datel	ADC-84	
		ADC-85	
		ADC-87	
		ADC-HX12B	
		ADC-HZ12B	
		ADC-HZ12BGZ	
	HybridSys	ADC581	
		ADC581B	
		HSADC85	
		HSADC85C	
	DDC	ADH-8585-1	
		DDC-5240	
		DDCADC85	
	MicroNet	MN5240	
		MNADC84	
		MNADC85	
		MNADC87	**3203**
◆DDCDAC87	AD	ADDAC87	
	Burr-Brown	DAC851	
		DAC87	
	Datel	DAC-687	
		DAC-87	
	Harris	HI5687	
	HybridSys	DAC335	
		HSDAC87	
	MicroNet	MNDAC87	
THA-05203	AD	HTC-0300	
		HTC0300	
	Burr-Brown	SCH804	
		SHC804	**3148**
	Datel	**SHM4860**	**3163**
	TeledyneP	TP4860	

Data Translation

Manufacturer Device	Replacement Source	Device	IC Master Page
DT5712	Intech	DAS5712	
DT5714	Intech	DAS5714	
DT5716	Intech	DAS5716	

Datel

Manufacturer Device	Replacement Source	Device	IC Master Page
ADC-5101	DDC	DDC-5101	
	MicroNet	MN5101	
ADC-5210	AD	AD5210	
	DDC	DDC-5210	
	MicroNet	**MN5210**	**3203**
ADC-5211	AD	AD5211	
	DDC	DDC-5211	
	MicroNet	MN5211	
ADC-5212	AD	AD5212	
	DDC	DDC-5212	
	MicroNet	MN5212	
ADC-5213	AD	AD5213	
	MicroNet	MN5213	
ADC-5214	AD	AD5214	
	HybridSys	MN5214	
	MicroNet	MN5214	
	TeledyneP	TP5214	
ADC-5215	AD	AD5215	
	MicroNet	MN5215	
ADC-5216	HybridSys	HS5216	
	DDC	DDC-5216	
	MicroNet	MN5216	
◆ADC-7104-14	**Intersil**	**ICL7104-14**	**3199**
◆ADC-7104-16	**Intersil**	**ICL7104-16**	**3199**
ADC-7109	**Intersil**	**ICL7109**	**3199**
	Maxim	ICL7109	
	TeledyneS	TSC7109	
◆ADC-8068	**Intersil**	**ICL8068**	**3199**
ADC-830	**Intersil**	**ADC0803**	**3199**
	National	ADC0803	
	TI	ADC0803	
ADC-84	AD	ADADC84	
		ADADC85	
		ADADC85S	
	Burr-Brown	ADC84	
		ADC85	
	Datel	ADC-85	
		ADC-87	
		ADC-HX12B	
		ADC-HZ12B	
		ADC-HZ12BGZ	
	HybridSys	ADC581	
		ADC581B	
		HSADC85	
		HSADC85C	
	DDC	ADH-8585-1	
		DDC-5240	
		DDCADC85	
		DDCADC87	
	MicroNet	MN5240	
		MNADC84	
		MNADC85	
		MNADC87	**3203**
ADC-847	Ferranti	ZN449	
ADC-847A	Ferranti	ZN447E	
ADC-847B	Ferranti	ZN447J	
ADC-847C	Ferranti	ZN449E	
ADC-85	AD	ADADC84	
		ADADC85	
		ADADC85S	
	Burr-Brown	ADC84	
		ADC85	
	Datel	ADC-84	
		ADC-87	
		ADC-HX12B	
		ADC-HZ12B	
		ADC-HZ12BGZ	
	HybridSys	ADC581	
		ADC581B	
		HSADC85	
		HSADC85C	
	DDC	ADH-8585-1	
		DDC-5240	
		DDCADC85	
		DDCADC87	
	MicroNet	MN5240	
		MNADC84	
		MNADC85	
		MNADC87	**3203**
ADC-856	Ferranti	ZN433	
ADC-87	AD	ADADC84	
		ADADC85	
		ADADC85S	
	Burr-Brown	ADC84	
		ADC85	
	Datel	ADC-84	
		ADC-85	
		ADC-HX12B	
		ADC-HZ12B	
		ADC-HZ12BGZ	
	HybridSys	ADC581	
		ADC581B	
		HSADC85	
		HSADC85C	

(Continued)

Manufacturer Device	Replacement Source	Device	IC Master Page
ADC-87	DDC	ADH-8585-1	
		DDC-5240	
		DDCADC85	
		DDCADC87	
	MicroNet	MN5240	
		MNADC84	
		MNADC85	
		MNADC87	**3203**
ADC-883	MicroPwr	MP7682	
	RCA	**CA3300**	**3216,3218**
◆ADC-885	AD	ADADC84	
		ADADC85	
		ADADC85S	
	Burr-Brown	ADC84	
		ADC85	
	Datel	ADC-84	
		ADC-85	
		ADC-87	
		ADC-HX12B	
		ADC-HZ12B	
		ADC-HZ12BGZ	
	HybridSys	ADC581	
		ADC581B	
		HSADC85	
		HSADC85C	
	DDC	ADH-8585-1	
		DDC-5240	
		DDCADC85	
		DDCADC87	
	MicroNet	MN5240	
		MNADC84	
		MNADC85	
		MNADC87	**3203**
ADC-EK10B	TeledyneP	4141	
	TeledyneS	8701	
ADC-EK12B	TeledyneP	4142	
	TeledyneS	8702	
ADC-EK12D	TeledyneP	4146	
	TeledyneS	8750	
ADC-EK8B	TeledyneP	4140	
	TeledyneS	8700	
ADC-ET10B	TeledyneP	4144	
	TeledyneS	8704	
ADC-ET12B	TeledyneP	4145	
	TeledyneS	8705	
ADC-ET8B	TeledyneP	4143	
	TeledyneS	8703	
◆ADC-HT12	AD	ADADC80	
	Burr-Brown	ADC80	
	MicroNet	**MNADC80**	**3203**
ADC-HX12B	AD	ADADC84	
		ADADC85	
		ADADC85S	
	Burr-Brown	ADC84	
		ADC85	
	Datel	ADC-84	
		ADC-85	
		ADC-87	
		ADC-HZ12B	
		ADC-HZ12BGZ	
	HybridSys	ADC581	
		ADC581B	
		HSADC85	
		HSADC85C	
	DDC	ADH-8585-1	
		DDC-5240	
		DDCADC85	
		DDCADC87	
	MicroNet	MN5240	
		MNADC84	
		MNADC85	
		MNADC87	**3203**
ADC-HZ12B	AD	ADADC84	
		ADADC85	
		ADADC85S	
	Burr-Brown	ADC84	
		ADC85	
	Datel	ADC-84	
		ADC-85	
		ADC-87	
		ADC-HX12B	
		ADC-HZ12BGZ	
	HybridSys	ADC581	
		ADC581B	
		HSADC85	
		HSADC85C	
	DDC	ADH-8585-1	
		DDC-5240	
		DDCADC85	
		DDCADC87	
	MicroNet	MN5240	
		MNADC84	

(Continued)

◆ Discontinued

Bold face device numbers indicate manufacturers data is provided in the IC Master on the pages noted.

Datel (Cont'd)

Manufacturer Device	Replacement Source	Device	IC Master Page
ADC-HZ12B	MicroNet	MNADC85	
		MNADC87	**3203**
ADC-HZ12BGZ	AD	ADADC84	
		ADADC85	
		ADADC85S	
	Burr-Brown	ADC84	
		ADC85	
	Datel	ADC-84	
		ADC-85	
		ADC-87	
		ADC-HX12B	
		ADC-HZ12B	
	HybridSys	ADC581	
		ADC581B	
		HSADC85	
		HSADC85C	
	DDC	ADH-8585-1	
		DDC-5240	
		DDCADC85	
		DDCADC87	
	MicroNet	MN5240	
		MNADC84	
		MNADC85	
		MNADC87	**3203**
ADC-MC8	Ferranti	ZN425	
ADC574A	AD	AD574	
	Burr-Brown	ADC574A	
	Harris	HI574A	
	HybridSys	HS574	
	MCE	MCE574	
	MicroNet	**MN574A**	**3203**
	MicroPwr	MP574	
	TeledyneP	TP574A	
ADC815	MicroNet	MN815	
ADC825	MicroNet	MN825	
AM-410-2	Harris	HA-5105	
AM-410-2M	Harris	HA-5100	
AM-411-2	Harris	HA-5115	
AM-411-2M	Harris	HA-5110	
AM-450-2	AD	AD540	
	Elantec	**EHA2505**	**3538**
	Harris	HA-2505	
AM-450-2M	**Elantec**	**EHA2502**	**3538**
	Harris	HA-2502	
AM-452-2M	**Elantec**	**EHA2522**	**3538**
	Harris	HA-2522	
AM-453-2C	AnalogSys	MA332	
	Exar	**XR5534**	**3557**
	Raytheon	RC5534	
	Signetics	**NE5534**	
			3708,3720,3729
		NE5534A	
			3708,3720,3729
	SSM	SSM2134	
	TI	NE5534	
		NE5534A	
AM-453-2M	**Raytheon**	**RM5534**	**3666**
	Signetics	**SE5534**	
			3708,3720,3729
		SE5534A	
			3708,3720,3729
AM-460-2	**Elantec**	**EHA2605**	**3538**
	Harris	HA-2605	
	Motorola	**MC1456**	**3616**
	TI	MC1456	
AM-460-2M	**Elantec**	**EHA2602**	**3538**
	Harris	HA-2602	
AM-462-1	AD	AD507	
	Burr-Brown	3508	
	Datel	AM-462-2	
	Elantec	**EHA2620**	**3538**
		EHA2622	**3538**
		EHA2625	**3538**
	Harris	HA-2620	
		HA-2622	
		HA-2625	
	Intersil	A561	
AM-462-2	AD	AD507	
	Burr-Brown	3508	
	Datel	AM-462-1	
	Elantec	**EHA2620**	**3538**
		EHA2622	**3538**
		EHA2625	**3538**
	Harris	HA-2620	
		HA-2622	
		HA-2625	
	Intersil	A561	
AM-464-2	Harris	HA-2645	
		LM343	
	Motorola	**MC1436**	**3616**
			(Continued)
AM-464-2	**Motorola**	**MC1439**	**3615**
	National	LM1436	
		LM343	
	SiliconG	SG1436	
		SG343	
	TeledyneP	1332	
AM-464-2M	Exar	XR1527A	
	Harris	HA-2640	
		LM143	
	Motorola	**MC1536**	**3616**
	National	LM143	
		LM1536	
	SiliconG	SG143	
		SG1536	
AM-470-2	Datel	AM-470-2C	
		AM-470-2M	
	TeledyneP	1323	
AM-470-2C	Datel	AM-470-2	
		AM-470-2M	
	TeledyneP	1323	
AM-470-2M	Datel	AM-470-2	
		AM-470-2C	
	TeledyneP	1323	
AM-500	TeledyneP	1430	
◆AM-7600	Intersil	ICL7600	
◆AM-7601	Intersil	ICL7601	
◆AM-7605	Intersil	ICL7605	
◆AM-7606	Intersil	ICL7606	
◆AM-7611	Intersil	ICL7611	
	Maxim	ICL7611	
◆AM-7612	Intersil	ICL7612	
	Maxim	ICL7612	
◆AM-7613	Intersil	ICL7613	
◆AM-7614	Intersil	ICL7614	
	Maxim	ICL7614	
◆AM-7615	**Intersil**	**ICL7615**	**3601**
AM-7650	Intersil	ICL7650	
	LinearTech	LTC1052	
		LTC7652	
	Maxim	ICL7650	
	Siliconix	**SI7135**	**3248,3254**
	TeledyneC	TSC7650	
◆AM-8510	Intersil	ICH8510	
◆AM-8520	Intersil	ICH8520	
◆AM-8530	Intersil	ICH8530	
AM452	Burr-Brown	3507	
	Harris	HA2525	
	Intronics	A560	
◆AMC-8013	AD	AD530	
		AD533	
	Burr-Brown	**4203**	**3151**
		MPY100	**3151**
	Intersil	ICL8013	
◆AS-5041	Harris	HI5041	
	Intersil	IH5041	
	Siliconix	DG5041	
◆AS-5042	Harris	HI5042	
	Intersil	DG188	
		IH5042	
	Siliconix	DG188	
		DG5042	
◆AS-5043	Harris	HI5043	
	Intersil	DG191	
		IH5043	
	Siliconix	DG191	
		DG243	
		DG5043	
◆AS-5044	Harris	HI5044	
	Intersil	IH5044	
	Siliconix	DG5044	
◆AS-5045	Harris	HI5045	
	Intersil	DG185	
		IH5045	
	Siliconix	DG185	
		DG5045	
	TI	TL185	
◆AS-5046	Harris	HI5046	
	Intersil	IH5046	
◆AS-5047	Harris	HI5047	
	Intersil	IH5047	
◆AS-5048	Harris	HI381	
		HI5048	
	Intersil	DG181	
		IH5048	
	Siliconix	DG181	
		DG381A	
◆AS-5049	Harris	HI384	
		HI5049	
	Intersil	DG184	
		IH5049	
	Siliconix	DG184	
		DG384A	
◆AS-5050	Harris	HI387	
		HI5050	
	Intersil	DG187	
		IH5050	
	Siliconix	DG187	
		DG387A	
◆AS-5051	Harris	HI5051	
	Intersil	DG190	
		IH5051	
	Siliconix	DG190	
◆CD-7216	**Intersil**	**ICM7216**	**1089**
◆CD-7217	**Intersil**	**ICM7217**	**1089**
	Maxim	ICL7217	
◆CD-7224	**Intersil**	**ICM7224**	**1089**
	Maxim	ICM7224	
◆CD-7225	**Intersil**	**ICM7225**	**1089**
	Maxim	ICM7225	
◆CD-7226	**Intersil**	**ICM7226**	**1089**
◆CD-7227	**Intersil**	**ICM7227**	**1089**
DAC-08B	AMD	AM1408	
		DAC-08	
		SSS1408	
	AD	AD1408	
		ADDAC-08	
	Datel	DAC-I8BC	
		DAC-IC8B	
		DAC-IC8BC	**3162**
	Fairchild	DAC-08	
		MA0802M	
		μA0801	
		μA0802	
	Hitachi	HA17408	
	Motorola	**DAC-08**	**3630**
		MC1408	
	National	DAC0801	
		DAC0802	
		DAC0806	
		DAC0807	
		DAC0808	
	NEC	μPC624	
	PMI	**DAC-08**	**3637,3639**
		DAC-1408	
	Raytheon	**DAC-08**	**3664**
	Signetics	MC1408	
DAC-608	National	DAC0832	
DAC-610	National	DAC1006	
DAC-612	MicroPwr	MP1208	
	National	DAC1208	
DAC-687	AD	ADDAC87	
	Burr-Brown	DAC851	
		DAC87	
	Datel	DAC-87	
	Harris	HI5687	
	HybridSys	DAC335	
		HSDAC87	
	MicroNet	MNDAC87	
◆DAC-71	AD	ADDAC71	
	Burr-Brown	DAC700	
		DAC701	
		DAC702	
		DAC71	
		DAC72	
	MicroNet	MNDAC71	
◆DAC-72	AD	ADDAC71	
	Burr-Brown	DAC700	
		DAC701	
		DAC702	
		DAC71	
		DAC72	
	MicroNet	MNDAC71	
DAC-7523	AD	AD7523	
	Intersil	AD7523	
	MicroPwr	MP7523	
DAC-7533	AD	AD7533	
	Intersil	AD7533	
	MicroPwr	MP7533	
	National	AD7533	
DAC-7541	AD	AD7541	
	Harris	HI7541	
	HybridSys	DAC331	
		HS7541	
	Intersil	AD7541	
		ICL7541	
	MicroPwr	MP7541	
		MP7621	
	National	AD7521	
	Siliconix	SI7541	
	TeledyneP	TP7541	
DAC-85	AD	ADDAC80	
		ADDAC85	
		DAC80	
	Burr-Brown	DAC80	
			(Continued)
DAC-85	Burr-Brown	DAC800	
		DAC85	
		DAC850	
	Datel	DAC-85C	
		DAC-HZ12B	
	Harris	HI5685	
	HybridSys	DAC9356	
		HSDAC80	
	MicroNet	**DAC80**	**3204**
		DAC85	
	National	DAC1280	
		DAC1285	
	TeledyneP	TPDAC80	
DAC-85C	AD	ADDAC80	
		ADDAC85	
		DAC80	
	Burr-Brown	DAC80	
		DAC800	
		DAC85	
		DAC850	
	Datel	DAC-85	
		DAC-HZ12B	
	Harris	HI5685	
	HybridSys	DAC9356	
		HSDAC80	
	MicroNet	**DAC80**	**3204**
		DAC85	
	National	DAC1280	
		DAC1285	
	TeledyneP	TPDAC80	
DAC-87	AD	ADDAC87	
	Burr-Brown	DAC851	
		DAC87	
	Datel	DAC-687	
	Harris	HI5687	
	HybridSys	DAC335	
		HSDAC87	
	MicroNet	MNDAC87	
DAC-HA10B	AD	AD7520	
	Intersil	AD7520	
	MicroPwr	MP7520	
	National	AD7520	
		DAC1020	
		DAC1021	
		DAC1022	
DAC-HA12B	AD	AD7521	
	HybridSys	DAC331-12	
	Intersil	AD7521	
	MicroPwr	MP7521	
	National	AD7521	
		DAC1220	
		DAC1221	
		DAC1222	
DAC-HA14	HybridSys	HS3140	
	MicroPwr	MP3140	
DAC-HK	MicroNet	MNDACHK	
DAC-HK12BGC	Intech	DAC-HK12BGC	
DAC-HK12BMM	Intech	DAC-HK12BMM	
DAC-HZ12B	AD	ADDAC80	
		ADDAC85	
		DAC80	
	Burr-Brown	DAC80	
		DAC800	
		DAC85	
		DAC850	
	Datel	DAC-85	
		DAC-85C	
	Harris	HI5685	
	HybridSys	DAC9356	
		HSDAC80	
	MicroNet	**DAC80**	**3204**
		DAC85	
	National	DAC1280	
		DAC1285	
	TeledyneP	TPDAC80	
◆DAC-HZ12BM	AD	ADDAC80	
		ADDAC85	
		DAC80	
	Burr-Brown	DAC80	
		DAC800	
		DAC85	
		DAC850	
	Datel	DAC-85	
		DAC-85C	
		DAC-HZ12B	
	Harris	HI5685	
	HybridSys	DAC9356	
		HSDAC80	
	MicroNet	**DAC80**	**3204**
		DAC85	
	National	DAC1280	

(Continued)

◆ Discontinued

The manufacturers report their devices can be used as direct replacements.
Performance details often differ, so compare the specifications considering your requirements.

Datel (Cont'd)

Manufacturer Device	Replacement Source	Device	IC Master Page
◆DAC-HZ12BM	National	DAC1285	
	TeledyneP	TPDAC80	
DAC-I8BC	AMD	AM1408	
		DAC-08	
		SSS1408	
	AD	AD1408	
		ADDAC-08	
	Datel	DAC-08B	
		DAC-IC8B	
		DAC-IC8BC	**3162**
	Fairchild	DAC-08	
		MA0802M	
		μA0801	
		μA0802	
	Hitachi	HA17408	
	Motorola	**DAC-08**	**3630**
		MC1408	
	National	DAC0801	
		DAC0802	
		DAC0806	
		DAC0807	
		DAC0808	
	NEC	μPC624	
	PMI	**DAC-08**	**3637,3639**
		DAC-1408	
	Raytheon	**DAC-08**	**3664**
	Signetics	MC1408	
DAC-IC10B	PMI	DAC-10	
	Raytheon	DAC-10	
DAC-IC10BM	**Signetics**	**SE5410**	**3690,3722**
DAC-IC8B	AMD	AM1408	
		DAC-08	
		SSS1408	
	AD	AD1408	
		ADDAC-08	
	Datel	DAC-08B	
		DAC-I8BC	
		DAC-IC8BC	**3162**
	Fairchild	DAC-08	
		MA0802M	
		μA0801	
		μA0802	
	Hitachi	HA17408	
	Motorola	**DAC-08**	**3630**
		MC1408	
	National	DAC0801	
		DAC0802	
		DAC0806	
		DAC0807	
		DAC0808	
	NEC	μPC624	
	PMI	**DAC-08**	**3637,3639**
		DAC-1408	
	Raytheon	**DAC-08**	**3664**
	Signetics	MC1408	
DAC-IC8BC	AMD	AM1408	
		DAC-08	
		SSS1408	
	AD	AD1408	
		ADDAC-08	
	Datel	DAC-08B	
		DAC-I8BC	
		DAC-IC8B	
	Fairchild	DAC-08	
		MA0802M	
		μA0801	
		μA0802	
	Hitachi	HA17408	
	Motorola	**DAC-08**	**3630**
		MC1408	
	National	DAC0801	
		DAC0802	
		DAC0806	
		DAC0807	
		DAC0808	
	NEC	μPC624	
	PMI	**DAC-08**	**3637,3639**
		DAC-1408	
	Raytheon	**DAC-08**	**3664**
	Signetics	MC1408	
DAC-IC8BM	AD	AD1508	
	Motorola	MC1508	
	National	MC1508	
	PMI	DAC-1508	
	Signetics	MC1508	
		SE5008	
		SE5009	
DAC-UP10	**Signetics**	**NE5020**	**3720,3725**
DAC-UP8B	AMD	AM6081	
	Signetics	**NE5018**	**3690,3720,3725**
		NE5019	**3725**
		NE5118	**3725**
		NE5119	**3725**
DAC562	AD	AD562	
	Harris	HI562A	
	MicroPwr	MP562	
	PMI	**PM562**	**3637**
DAS-952	National	ADC0816	
◆DD-7211	Hughes	H7211	
	Intersil	**ICM7211**	**1091**
	Maxim	ICM7211	
	RCA	**CD22104**	**1147**
		CD22105	**1147**
	TeledyneS	TSC7211	
◆DD-7212	**Intersil**	**ICM7212**	**1091**
	Maxim	ICM7212	
	TeledyneS	TSC7212	
◆DD-7218	Intersil	ICM7218	
HDAS-16	Datel	HDAS-8	
	MicroNet	**MN7150**	**3202**
HDAS-8	Datel	HDAS-16	
	MicroNet	**MN7150**	**3202**
◆LA-8048	Intersil	ICL8048	
◆LA-8049	Intersil	ICL8049	
◆MU-6108	AD	AD7501	
	Burr-Brown	**MPC8S**	**3149**
	Datel	MUX808	
		MX-808	**3163**
	Harris	HI508	
	Intersil	IH6108	
	MicroPwr	MP7501	
		MP7508	
	National	LF11508	
		LF13508	
	PMI	DMX-88	
		MUX-08	
		MUX-88	
	Siliconix	DG508A	
	TeledyneP	4554	
◆MU-6116	Intersil	IH6116	
◆MU-6208	**Burr-Brown**	**MPC4D**	**3149**
	Harris	HI509	
	Intersil	IH6208	
	MicroPwr	MP7509	
		MP7509DI	
	National	LF11509	
		LF13509	
	PMI	MUX-24	
	Siliconix	DG509A	
	TeledyneP	4553	
◆MU-6216	Intersil	IH6216	
MUX808	AD	AD7501	
	Burr-Brown	**MPC8S**	**3149**
	Datel	**MX-808**	**3163**
	Harris	HI508	
	Intersil	IH6108	
	MicroPwr	MP7501	
		MP7508	
	National	LF11508	
		LF13508	
	PMI	DMX-88	
		MUX-08	
		MUX-88	
	Siliconix	DG508A	
	TeledyneP	4554	
MV-1606	**Burr-Brown**	**MPC16S**	**3149**
	Datel	**MX-1606**	**3163**
	Harris	HI506	
	Intersil	IH6116	
	MicroPwr	MP7506	
	PMI	MUX-16	
	Siliconix	DG506A	
MV-808	AD	AD7503	
	Harris	HI1818A	
	HybridSys	MUX201	
	MicroPwr	MP7503	
MVD-409	Harris	HI-1818A	
		HI1828A	
MVD-807	AD	AD7507	
	Burr-Brown	**MPC8D**	**3149**
	Datel	**MXD-807**	**3163**
	Harris	HI507	
	Intersil	IH6216	
	MicroPwr	MP7507	
	PMI	MUX-28	
	Siliconix	DG507A	
	TeledyneP	4551	
MVD409	AD	AD7502	
	Harris	HI1828A	
	MicroPwr	MP7502	
	National	CD4052	
	Solitron	CM4052	
	SSS	SCL4052	
	Toshiba	TC4052	
MX-1606	**Burr-Brown**	**MPC16S**	**3149**
	Datel	**MV-1606**	**3163**
	Harris	HI506	
	Intersil	IH6116	
	MicroPwr	MP7506	
	PMI	MUX-16	
	Siliconix	DG506A	
MX-1616	Burr-Brown	MPC800	
	Harris	HI516	
MX-808	AD	AD7501	
	Burr-Brown	**MPC8S**	**3149**
	Datel	MUX808	
	Harris	HI508	
	Intersil	IH6108	
	MicroPwr	MP7501	
		MP7508	
	National	LF11508	
		LF13508	
	PMI	DMX-88	
		MUX-08	
		MUX-88	
	Siliconix	DG508A	
	TeledyneP	4554	
◆MX-818	Burr-Brown	MPC801	
	Harris	HI-518	
MX1606	**Burr-Brown**	**MPC16S**	**3149**
	Harris	HI506A	
	TeledyneP	4552	
◆MXD-409	**Burr-Brown**	**MPC4D**	**3149**
	Harris	HI509	
	Intersil	IH6208	
	MicroPwr	MP7509	
		MP7509DI	
	National	LF11509	
		LF13509	
	PMI	MUX-24	
	Siliconix	DG509A	
	TeledyneP	4553	
MXD-409(*)	**Burr-Brown**	**MPC4D**	**3149**
	Harris	HI509A	
	Intersil	IH5208	
	TeledyneP	4553	
MXD-807	AD	AD7507	
	Burr-Brown	**MPC8D**	**3149**
	Datel	**MVD-807**	**3163**
	Harris	HI507	
	Intersil	IH6216	
	MicroPwr	MP7507	
	PMI	MUX-28	
	Siliconix	DG507A	
	TeledyneP	4551	
MXD807	**Burr-Brown**	**MPC8D**	**3149**
	Harris	HI507A	
	TeledyneP	4551	
◆SHM-1C-1	TeledyneP	4856-01	
SHM-20	Burr-Brown	SHC5320	
	Harris	HA-5320	
	TeledyneP	4866	
SHM-20C	Harris	HA-5320-5	
SHM-20M	Harris	HA-5320-2	
SHM-IC-1	AD	AD583	
	Harris	HA-2425	
	PMI	SMP-10	
		SMP-11	
	TeledyneP	4856	
SHM20	Harris	HA-5320	
	TeledyneP	4866	
SHM4860	AD	HTC-0300	
		HTC0300	
	Burr-Brown	SCH804	
		SHC804	**3148**
	DDC	THA-05203	
	TeledyneP	TP4860	
SHMLM2	Burr-Brown	SHC298	
	National	LF298	
VFQ-1	TeledyneP	4780	
	TeledyneS	9400	
◆VFQ-2	TeledyneP	4781	
	TeledyneS	9401	
◆VFQ-3	TeledyneP	4782	
	TeledyneS	9402	
VI-7660	**Intersil**	**ICL7660**	**3603**
	LinearTech	LTC1044	
	Maxim	ICL7660	
	Siliconix	SI7660	
	TeledyneC	TSC7660	
VR-182	Ferranti	ZN458	
◆VR-8069	AD	AD589	
	Ferranti	ZN423	
	Intersil	**ICL8069**	**3604**
	Maxim	ICL8069	
	MicroPwr	**MP5010**	**688,3607**
	National	LM113	
		LM313	
	TeledyneS	9491	
		T-SC9491	
◆WG-8038	**Exar**	**XR8038**	**3554**
	Intersil	ICL8038	

Dionics Inc.

Manufacturer Device	Replacement Source	Device	IC Master Page
DI230	ITT	ITT505	
DI250	Cherry	CS250	
DI260	Cherry	CS260	
DI302	Sprague	UDN-7183A	
		UDN-7184A	
		UDN-7186A	
DI507	Sprague	UDN-6164A	
DI510	**Sprague**	**UDN-6510**	**3269**
DI512	**Sprague**	**UDN-6514**	**3269**
DI513B	Dionics	DI514B	
	Exar	**XR6118**	**3554**
	OKI	MSL912	
	Sanyo	LB1290	
	Signetics	**NE594**	**3726**
	Sprague	**UDN-6118**	**3269**
	Toshiba	TD62781	
DI514B	Dionics	DI513B	
	Exar	**XR6118**	**3554**
	OKI	MSL912	
	Sanyo	LB1290	
	Signetics	**NE594**	**3726**
	Sprague	**UDN-6118**	**3269**
	Toshiba	TD62781	

Elantec

Manufacturer Device	Replacement Source	Device	IC Master Page
EHA2500	Harris	HA-2500	
EHA2502	Datel	AM-450-2M	
	Harris	HA-2502	
EHA2505	AD	AD540	
	Datel	**AM-450-2**	**3163**
	Harris	HA-2505	
EHA2510	Harris	HA-2510	
EHA2512	Harris	HA-2512	
EHA2515	Harris	HA-2515	
EHA2520	Harris	HA-2520	
EHA2522	Datel	AM-452-2M	
	Harris	HA-2522	
EHA2525	Harris	HA-2525	
EHA2600	Fairchild	μA741	
	Harris	HA-2600	
	Motorola	**MC1556**	**3616**
	TeledyneP	1326	
	TI	MC1556	
EHA2602	Datel	AM-460-2M	
	Harris	HA-2602	
EHA2605	**Datel**	**AM-460-2**	**3163**
	Harris	HA-2605	
	Motorola	**MC1456**	**3616**
	TI	MC1456	
EHA2620	AD	AD507	
	Burr-Brown	3508	
	Datel	AM-462-1	
		AM-462-2	
	Elantec	**EHA2622**	**3538**
		EHA2625	**3538**
	Harris	HA-2620	
		HA-2622	
		HA-2625	
	Intersil	A561	
EHA2622	AD	AD507	
	Burr-Brown	3508	
	Datel	AM-462-1	
		AM-462-2	
	Elantec	**EHA2620**	**3538**
		EHA2625	**3538**
	Harris	HA-2620	
		HA-2622	
		HA-2625	
	Intersil	A561	
EHA2625	AD	AD507	
	Burr-Brown	3508	
	Datel	AM-462-1	
		AM-462-2	
	Elantec	**EHA2620**	**3538**
		EHA2622	**3538**
	Harris	HA-2620	
		HA-2622	

(Continued)

◆ Discontinued

Bold face device numbers indicate manufacturers data is provided in the IC Master on the pages noted.

ALTERNATE SOURCE DIRECTORY

Elantec (Cont'd)

Manufacturer Device	Replacement Source	Device	IC Master Page
EHA2625	Harris	HA-2625	
	Intersil	A561	
EL2002	**Elantec**	**EL2003**	**3537,3539**
		ELH0002	**3537**
	LinearTech	LT1010	
	Micra	MC0002	
		MC0021	
	National	LH0002	
	OEI	9910	
	TeledyneC	LH0002	
EL2003	Elantec	EL2002	
		ELH0002	**3537**
	LinearTech	LT1010	
	Micra	MC0002	
		MC0021	
	National	LH0002	
	OEI	9910	
	TeledyneC	LH0002	
EL2004	**Elantec**	**EL2005**	**3537,3541**
		ELH0033	**3537**
	Harris	HA-5033	
	Maxim	LH0033	
	Micra	MC0033	
	National	LH0033	
	TeledyneC	LH0033	
	TeledyneP	1359	
EL2005	**Elantec**	**EL2004**	**3537,3540**
		ELH0033	**3537**
	Harris	HA-5033	
	Maxim	LH0033	
	Micra	MC0033	
	National	LH0033	
	TeledyneC	LH0033	
	TeledyneP	1359	
EL2006	**Elantec**	**ELH0032**	**3537**
	Harris	HA2541	
	Micra	MC0032	
	National	LH0032	
	TeledyneC	LH0032	
	TeledyneP	0032	
ELH0002	Elantec	EL2002	
		EL2003	**3537,3539**
	LinearTech	LT1010	
	Micra	MC0002	
		MC0021	
	National	LH0002	
	OEI	9910	
	TeledyneC	LH0002	
ELH0021	National	LH0021	
ELH0032	**Elantec**	**EL2006**	**3537,3542**
	Harris	HA2541	
	Micra	MC0032	
	National	LH0032	
	TeledyneC	LH0032	
	TeledyneP	0032	
ELH0033	**Elantec**	**EL2004**	**3537,3540**
		EL2005	**3537,3541**
	Harris	HA-5033	
	Maxim	LH0033	
	Micra	MC0033	
	National	LH0033	
	TeledyneC	LH0033	
	TeledyneP	1359	
ELH0101	**Apex**	**PA02**	**3525**
	Maxim	LH0101	
	National	LH0101	
LH0041	Micra	MC0041	
	National	LH0041	

Exar Corporation

Manufacturer Device	Replacement Source	Device	IC Master Page
C277	PMI	RPT-82	
		RPT-83	
XR082	**RCA**	**CA082**	**3672,3676**
	SGS	TL082	
	TI	TL082	
	ThomsonCSF	TDB0353	
XR083	TI	TL083	
XR084	Fairchild	μAF774	
	RCA	**CA084**	**3672,3676**
	SGS	TL084	
	TI	TL084	
XR1310	National	LM1310	
	TI	SN76115	
	Toshiba	TA7157	
XR13600	National	LM13600	
	PMI	LM13600	
XR14412	**Motorola**	**MC14412**	**3633**
XR146	National	LM140	
XR1468	Exar	XR4195	
	Motorola	**MC1468**	**3627**
	Raytheon	RC4195	
	SiliconG	SG1468	
		SG2501A	
		SG3501A	
		SG4501	
XR1488	TI	SN75188	
XR1489A	Fairchild	UA150	
		UA212A	
		μA1489A	
	Motorola	**MC1489A**	**3211,3212**
	National	DS1489A	
	SGS	MC1489	
	Signetics	**MC1489A**	**3720,3726**
	SiliconG	SG1489A	
	TI	MC1489A	
		SN75189A	
XR1524	Cherry	CS1524	
	IPS	**IP1524**	**3599**
	LinearTech	LT1524	
	National	LM1524	
	RCA	CA1524	
	SGS	SG1524	
		UC1524A	
	SiliconG	SG1524	
	Sprague	ULS-8124	
	TI	**SG1524**	**720**
	Unitrode	**UC1524A**	**3739,3739**
XR1525A	Cherry	CS1525A	
	IPS	**IP1525A**	**3599**
	LinearTech	LT1525A	
	Motorola	**SG1525A**	**3626**
	SGS	SG1524A	
	SiliconG	SG1525A	
	Siliconix	PWM125	
	Sprague	ULS-8125	
	TI	SG1525A	
	Unitrode	**UC1525A**	**3739**
XR1527A	Datel	AM-464-2M	
	Harris	HA-2640	
		LM143	
	Motorola	**MC1536**	**3616**
	National	LM143	
		LM1536	
	SiliconG	SG143	
		SG1536	
XR1543	SiliconG	SG1543	
XR1568	**Motorola**	**MC1568**	**3627**
	Raytheon	RM4195	
	SiliconG	SG1501A	
		SG1568	
XR200	Cherry	CS1200	
XR2001	Exar	XR2001C	
		XR2201C	
	Mitsubishi	M54524	
	Motorola	**MC1411**	**3212**
		ULN2001	**3212**
	NEC	μPA2001	
	RIFA	PBD3523-11	
	Sanyo	LB1231	
	SGS	L201	
		ULN2001	
	SiliconG	SG2001	
	Sprague	**ULN-2001**	**3269**
		ULQ-2001	
	TI	ULN2001A	
	Toshiba	TD62001	
		TD62101	
XR2001C	Exar	XR2001	
		XR2201C	
	Mitsubishi	M54524	
	Motorola	**MC1411**	**3212**
		ULN2001	**3212**
	NEC	μPA2001	
	RIFA	PBD3523-11	
	Sanyo	LB1231	
	SGS	L201	
		ULN2001	
	SiliconG	SG2001	
	Sprague	**ULN-2001**	**3269**
		ULQ-2001	
	TI	ULN2001A	
	Toshiba	TD62001	
		TD62101	
XR2002	Motorola	MC1412T	
	Sprague	ULQ-2002	
XR2002C	Exar	XR2202C	
	Fairchild	MC1412	
			(Continued)
XR2002C	Mitsubishi	M54525	
	Motorola	**MC1412**	**3212**
		ULN2002	**3212**
	NEC	μPA2002	
	RIFA	PBD352304	
	Sanyo	LB1232	
	SGS	L202	
		ULN2002	
	Signetics	NE5602	
	SiliconG	SG2002	
	Sprague	ULN-2002	
	TI	ULN2002A	
	Toshiba	TD62002	
XR2003	Motorola	MC1413T	
	RIFA	PBD3523-13	
	SiliconG	SG2023	
	Sprague	ULN-2023	
		ULQ-2003	
	TI	SN75468	
XR2003C	Exar	XR2203C	
	Fairchild	MC1413	
	Mitsubishi	M54523	
	Motorola	**MC1413**	**3212**
		ULN2003	**3212**
	NEC	μPA2003	
	RIFA	PBD352303	
	Sanyo	LB1233	
	SGS	L203	
		ULN2003	
	Signetics	NE5603	
		ULN2003	**3721**
	SiliconG	SG2003	
	Sprague	ULN-2003	
	Telefunken	TDA2003	
	TI	ULN2003A	
	Toshiba	TD62003	
		TD62103	
XR2004	Motorola	MC1416T	
	Sprague	ULQ-2004	
XR2011C	SiliconG	SG2011	
	Sprague	ULN-2011	
XR2012C	SiliconG	SG3852	
	Sprague	ULN-2012	
XR2013C	SiliconG	SG2013	
	Sprague	ULN-2013	
XR2014C	SiliconG	SG2014	
	Sprague	ULN-2014	
XR2201C	Exar	XR2001	
		XR2001C	
	Mitsubishi	M54524	
	Motorola	**MC1411**	**3212**
		ULN2001	**3212**
	NEC	μPA2001	
	RIFA	PBD3523-11	
	Sanyo	LB1231	
	SGS	L201	
		ULN2001	
	SiliconG	SG2001	
	Sprague	**ULN-2001**	**3269**
		ULQ-2001	
	TI	ULN2001A	
	Toshiba	TD62001	
		TD62101	
XR2202C	Exar	XR2002C	
	Fairchild	MC1412	
	Mitsubishi	M54525	
	Motorola	**MC1412**	**3212**
		ULN2002	**3212**
	NEC	μPA2002	
	RIFA	PBD352304	
	Sanyo	LB1232	
	SGS	L202	
		ULN2002	
	Signetics	NE5602	
	SiliconG	SG2002	
	Sprague	ULN-2002	
	TI	ULN2002A	
	Toshiba	TD62002	
XR2203C	Exar	XR2003C	
	Fairchild	MC1413	
	Mitsubishi	M54523	
	Motorola	**MC1413**	**3212**
		ULN2003	**3212**
	NEC	μPA2003	
	RIFA	PBD352303	
	Sanyo	LB1233	
	SGS	L203	
		ULN2003	
	Signetics	NE5603	
		ULN2003	**3721**
	SiliconG	SG2003	
	Sprague	ULN-2003	
			(Continued)
XR2203C	Telefunken	TDA2003	
	TI	ULN2003A	
	Toshiba	TD62003	
		TD62103	
XR2204C	Mitsubishi	M54526	
	Motorola	**MC1416**	**3212**
		ULN2004	**3212**
	NEC	μPA2004	
	RIFA	PBD352302	
	Sanyo	LB1234	
	SGS	L204	
		ULN2004	
	Signetics	NE5604	
		ULN2004	**3721**
	SiliconG	SG2004	
	Sprague	ULN-2004	
		ULS-2004	
	TI	ULN2004A	
	Toshiba	TD62004	
		TD62104	
XR2205C	Sprague	ULN-2005	
	TI	ULN2005	
XR2207	Raytheon	XR2207	
XR2211	Raytheon	XR2211	
XR2240	Fairchild	UA238	
		μA2240	
	Intersil	ICL8240	
	TI	μA2240	
XR2242	Maxim	ICM7242	
XR246	National	LM246	
	ThomsonCSF	TDE0146	
XR2524	Cherry	CS2524	
	IPS	**IP2524**	**3599**
	RCA	CA2524	
	SGS	SG2524	
		UC2524A	
	SiliconG	SG2524	
	Sprague	ULQ-8124	
	TI	SG2524	
	Unitrode	**UC2524A**	**3739,3739**
XR2525A	Cherry	CS2525A	
	IPS	**IP2525A**	**3599**
	LinearTech	LT2525A	
	Motorola	**SG2525A**	**3626**
	SiliconG	SG2525A	
	Siliconix	PWM25B	
	Sprague	ULQ-8125	
	TI	SG2525A	
	Unitrode	**UC2525A**	**3739**
XR2527A	Cherry	CS2527A	
	IPS	IP2527A	
	LinearTech	LT2527A	
	Motorola	**SG2527A**	**3626**
	SiliconG	SG2527A	
	TI	SG2527A	
	Unitrode	**UC2527A**	**3739**
XR2543	IPS	IP2543	
	SiliconG	SG2543	
XR2567	Exar	XR567	
	MCE	MCE-567	
	National	LM567	
	Signetics	**NE567**	**3720**
		SE567	**3728**
	Samsung	LM567	
XR2917	Cherry	CS2917	
	National	LM2917	
XR300	Cherry	CS1300	
XR3403M	Raytheon	RM3403	
XR346	Harris	HA2740	
	National	LM346	
	ThomsonCSF	LM346	
XR3470	Cherry	CS3470A	
	Motorola	MC3470	
XR3524	Cherry	CS3524	
	IPS	**IP3524**	**3599**
		IP3524B	**3599**
	National	LM3524	
	RCA	CA3524	
	SGS	SG3524	
		UC3524A	
	Signetics	**SG3524**	**3715,3720,3730**
	SiliconG	SG3524B	
	Sprague	ULN-8124	
	TI	SG3524	
	Unitrode	**UC3524A**	**3739,3739**
XR3525A	**IPS**	**IP3525A**	**3599**
	LinearTech	LT3525A	
	Motorola	**SG3525A**	**3626**
	SGS	SG3525A	
			(Continued)

◆ Discontinued

The manufacturers report their devices can be used as direct replacements.
Performance details often differ, so compare the specifications considering your requirements.

Exar Corporation (Cont'd)

Manufacturer Device	Replacement Source	Device	IC Master Page
XR3525A	SiliconG	SG3525A	
	Siliconix	PWM25	
	TI	SG3525A	
	Unitrode	**UC3525A**	**3739**
XR3527A	Cherry	CS3527	
		CS3527A	
	IPS	**IP3527**	**3599**
	LinearTech	LT3527A	
	Motorola	**SG3527A**	**3626**
	SGS	SG3527A	
	SiliconG	SG3527A	
	TI	SG3527A	
XR3543	IPS	IP3543	
	SiliconG	SG3543	
XR400	MCE	MCE-AD15C	
XR4136M	Raytheon	RM4136	
	TI	**RM4136**	**719**
XR4151	**Raytheon**	**RC4151**	**3665**
		RM4151	
		RV4151	
	TI	XR4151	
XR4194	MCE	MCE-4194	
	Raytheon	RC4194	
		RM4194	
XR4195	Exar	XR1468	
	Motorola	**MC1468**	**3627**
	Raytheon	RC4195	
	SiliconG	SG1468	
		SG2501A	
		SG3501A	
		SG4501	
XR4202	Plessey	TAB1042	
XR4558	Fairchild	µA4558	
	Motorola	**MC4558**	**3617**
	National	LM1458	
	Raytheon	RC4558	
	TI	RC4558	
XR4560	Raytheon	RC4560	
XR4739	Fairchild	µA739	
		µA749	
	National	LM1303	
	Raytheon	RC4739	
	SGS	TBA231	
	TI	SN76131	
		SN76149	
XR4751	Intersil	LM348	
	Motorola	**MC4741**	**3618**
	National	LM348	
	Raytheon	HA4741	
XR494	Cherry	CS494M	
	Fairchild	µA494	
	IPS	**IP494A**	**3599**
	Motorola	TL494	
	Sprague	ULN8194A	
		ULS-8194	
	TI	**TL494M**	**720**
		TL594M	**720**
	Unitrode	**UC494A**	**3739,3739**
XR495	Motorola	TL495	
XR500	MCE	MCE-D15B	
XR5532	**Signetics**	**NE5532**	**3720**
		NE5532A	**3720**
		SE5532	**3721,3729**
		SE5532A	**3721,3729**
	TI	NE5532	
		NE5532A	
XR5533	**Signetics**	**NE5533**	**3708,3729**
		NE5533A	**3708,3729**
	TI	NE5533	
XR5534	AnalogSys	MA332	
	Datel	AM-453-2C	
	Raytheon	RC5534	
	Signetics	**NE5534**	**3708,3720,3729**
		NE5534A	**3708,3720,3729**
	SSM	SSM2134	
	TI	NE5534	
		NE5534A	
XR555	Fairchild	µA555	
	Hitachi	HA17555	
	Intersil	NE555	
	Mitsubishi	M51841	
		M51848	
		M5251	
		M5E555	
	Motorola	MC1455	
	NEC	µPC1555	
XR555	Raytheon	RC555	
	RCA	CA555	
	Sanyo	LB8555	
	SGS	NE555	
	Signetics	**NE555**	**3721**
		NE555N	
	TI	NE555	
	ThomsonCSF	LM555	
	Samsung	**NE555**	**3679**
XR555M	Intersil	SE555	
	Motorola	MC1555	
	Raytheon	RM555	
	Signetics	**SE555**	**3724,3728**
	TI	**SE555**	**720**
XR558	**Signetics**	**NE558**	**3720**
		SE558	**3720**
XR567	Exar	XR2567	
	MCE	MCE-567	
	National	LM567	
	Signetics	**NE567**	**3720**
		SE567	**3728**
	Samsung	LM567	
XR6118	Dionics	DI513B	
		DI514B	
	OKI	MSL912	
	Sanyo	LB1290	
	Signetics	**NE594**	**3726**
	Sprague	**UDN-6118**	**3269**
	Toshiba	TD62781	
XR6128	**Sprague**	**UDN-6128**	**3269**
	Toshiba	TD62782	
XR8038	Intersil	ICL8038	
XRA100	Exar	XRM100	
	Interdesign	MOA	
		MOM	
	MCE	MCE-A20	
		MCE-A20A	
XRB100	Interdesign	MOB	
	MCE	MCE-A20B	
XRC100A	Interdesign	MOC	
	MCE	MCE-A20C	
XRD100	Interdesign	MOD	
	MCE	MCE-A40D	
XRE100	Cherry	CS2000	
	Interdesign	MOE	
	MCE	MCE-A20E	
XRF100	Cherry	CS3000	
	Interdesign	MCF	
		MOF	
	MCE	MCE-A20F	
XRG100	Cherry	CS2500	
	Interdesign	MOG	
	MCE	MCE-A20G	
XRH100	Interdesign	MOH	
	MCE	MCE-A20H	
XRJ100	Interdesign	MOJ	
	MCE	MCE-A20J	
XRL100	Cherry	CS3200	
	Interdesign	MOL	
	MCE	MCE-A20L	
XRL555	Intersil	ICL7555	
XRL556	Intersil	ICL7556	
XRM100	Exar	XRA100	
	Interdesign	MOA	
		MOM	
	MCE	MCE-A20	
		MCE-A20A	
XRT8205	Cherry	CS8205	
	Mitel	ML8205	
	Samsung	ML8205	

(Continued)

EXEL Microelectronics

Manufacturer Device	Replacement Source	Device	IC Master Page
XL2816A	Intel	2816A	
	Rockwell	R5516A/2816A	
	SEEQ	2816A	
	Samsung	**KM2816A**	**4140**
XL2817A	Intel	2817A	
	SEEQ	2817A	
	Samsung	KM2817A	
XL2864A	AMD	AM2864B	
		AM9864	
	EXEL	XLS2864A	
	Fujitsu	UBM28C64	
	Hitachi	HN58064	
	SEEQ	2864	
	Xicor	**X2864A**	**734,4280**
XL2865A	AMD	AM2864B	
XL46C16	Fairchild	932511M	
	Fujitsu	MB7138E	
	Harris	HM6616	
		HM76161	
XL46C16	Hitachi	HN25169S	
	MMI	**53S1681**	**4101**
	Motorola	**MCM76161**	**4124**
	National	DM77S191	
		DM77S191A	
		DM77S291	
		DM77S291A	
	Raytheon	**29681**	**4134**
		29681A	**4134**
		29683	**4134**
		29683A	**4134**
	ThomsonCSF	SFC71191A	
XL48C64	AMD	AM9864	
	Fujitsu	MBM28C65	
	Intel	**2864**	**4068**
XL88C681	Motorola	MC2681	
	Signetics	**SCN2681**	**1692**
XLS2864A	AMD	AM2864B	
		AM9864	
	EXEL	XL2864A	
	Fujitsu	UBM28C64	
	Hitachi	HN58064	
	SEEQ	2864	
	Xicor	**X2864A**	**734,4280**

(Continued)

Fairchild

Manufacturer Device	Replacement Source	Device	IC Master Page
11C01	**Motorola**	**MC1688**	**1123**
11C05	**Motorola**	**MC1699**	**1128**
	Plessey	SP8610	
		SP8616	
11C06	**Motorola**	**MC1690**	**1127**
◆11C24	Motorola	MC4024	
		MC4324	
◆11C44	Motorola	MC4044	
		MC4344	
◆11C58	**Motorola**	**MC1658**	**1131**
	Plessey	SP1658	
11C70	**Motorola**	**MC1670**	**1127**
	Plessey	SP1670	
11C90	Plessey	SP8680	
		SP8685	
11C91	Plessey	SP8740	
2102H	National	MM2102A	
	Panasonic	MN2102	
29F01	Fairchild	F2901A	
	National	IDM2901A	
	ThomsonCSF	SFC2901	
29F10	Motorola	MC2910	
	ThomsonCSF	SFC2910	
32Z565	AMD	27S49	
		AM27S49	
	Cypress	CY7C264	
	Fairchild	93565	
	Fujitsu	7144H	
		MB7144	
	Harris	76641	
	Raytheon	**29VP864**	**4137**
	Signetics	82641	
3341A	AMD	AM2841	
	Plessey	MJ2841	
3347	GouldAMI	S2182	
		S2183	
		S2185	
	SMC	SR5015	
3850	Mostek	MK3850	
3851	Mostek	MK3851	
3852	Mostek	MK3852	
3853	Mostek	MK3853	
3854	Mostek	MK3854	
3861	Mostek	MK3861	
5116	Mostek	MK5116	
	National	TP5116	
	SGS	M5116	
5116-1	Mostek	MK5117	
5151	Mostek	MK5151	
5156	CTI	MA556	
	Mostek	MK5156	
	National	TP5156	
	SGS	M5156	
5400	National	DM5400	
	Signetics	5400	
	TI	**SN5400**	**712**
5402	National	DM5402	
	TI	**SN5402**	**712**
5404	Fairchild	9016	
	National	DM5404	
		DM9016C	
	TI	**SN5404**	**712**
5408	National	DM5408	
	TI	**SN5408**	**712**
5409	National	DM5409	
	TI	**SN5409**	**712**
5410	National	DM5410	
	TI	**SN5410**	**712**
54121	National	DM54121	
	Signetics	54121	
	TI	**SN54121**	**712**
54122	**TI**	**SN54122**	**712**
54123	National	DM54123	
	Signetics	54123	
	TI	**SN54123**	**712**
54125	National	DM54125	
		DM7093	
	TI	**SN54125**	**712**
5414	National	DM5414	
	Signetics	5414	
	TI	**SN5414**	**712**
54150	National	DM54150	
	TI	**SN54150**	**712**
54151A	National	DM54151	
	Signetics	54151	
	TI	**SN54151A**	**712**
54153	National	DM54153	
	Signetics	54153	
	TI	**SN54153**	**712**
54157	National	DM54157	
	Signetics	54157	
	TI	**SN54157**	**712**
54161	National	DM54161	
	Signetics	54161	
	TI	**SN54161**	**712**
54164	National	DM54164	
		DM7570	
	Signetics	54164	
	TI	**SN54164**	**712**
54165	National	DM54165	
		DM7590	
	Signetics	54165	
	TI	**SN54165**	**712**
54170	National	DM54170	
	TI	**SN54170**	**712**
54173	National	DM54173	
		DM7551	
	Raytheon	RM8T10	
	TI	**SN54173**	**712**
54174	National	DM54174	
	Signetics	54174	
	TI	**SN54174**	**712**
54175	National	DM54175	
	Signetics	54175	
	TI	**SN54175**	**712**
54191	National	DM54191	
	Signetics	54191	
	TI	**SN54191**	**712**
5420	National	DM5420	
	Signetics	5420	
	TI	**SN5420**	**712**
5425	National	DM5425	
	TI	**SN5425**	**712**
54279	Signetics	54279	
	TI	**SN54279**	**712**
54298	**TI**	**SN54298**	**712**
5430	National	DM5430	
	TI	**SN5430**	**712**
5432	National	DM5432	
	Signetics	5432	
	TI	**SN5432**	**712**
5437	National	DM5437	
	TI	**SN5437**	**712**
5440	National	DM5440	
	TI	**SN5440**	**712**
5442A	National	DM5442	
	Signetics	5442	
	TI	**SN5442A**	**712**
5451	National	DM5451	
	TI	**SN5451**	**712**
5473	National	DM5473	
	Signetics	5473	
	TI	**SN5473**	**712**
5474	National	DM5474	
	Signetics	5474	
	TI	**SN5474**	**712**
5475	National	DM5475	
	Signetics	5475	
	TI	**SN5475**	**712**
5476	National	DM5476	
	Signetics	5476	
	TI	**SN5476**	**712**
5483A	Signetics	5483A	
	TI	**SN5483A**	**712**

◆ Discontinued

Bold face device numbers indicate manufacturers data is provided in the IC Master on the pages noted.

Fairchild (Cont'd)

Manufacturer Device	Replacement Source	Device	IC Master Page
5485	National	DM5485	
	Signetics	5485	
	TI	**SN5485**	**712**
5486	National	DM5486	
	Signetics	5486	
	TI	**SN5486**	**712**
5497	**TI**	**SN5497**	**712**
54F00	**Motorola**	**MC54F00**	**1122**
	Signetics	54F00	
54F02	**Motorola**	**MC54F02**	**1122**
	Signetics	54F02	
54F04	**Motorola**	**MC54F04**	**1124**
	Signetics	54F04	
54F08	**Motorola**	**MC54F08**	**1122**
	Signetics	54F08	
54F10	**Motorola**	**MC54F10**	**1122**
	Signetics	54F10	
54F109	**Motorola**	**MC54F109**	**1126**
	Signetics	54F109	
54F11	**Motorola**	**MC54F11**	**1122**
	Signetics	54F11	
54F138	**Motorola**	**MC54F138**	**1130**
	Signetics	54F138	
54F139	**Motorola**	**MC54F139**	**1130**
	Signetics	54F139	
54F20	**Motorola**	**MC54F20**	**1122**
	Signetics	54F20	
54F240	**Motorola**	**MC54F240**	**1124**
	Signetics	54F240	
54F241	**Motorola**	**MC54F241**	**1124**
	Signetics	54F241	
54F243	**Motorola**	**MC54F243**	**1124**
	Signetics	54F243	
54F244	**Motorola**	**MC54F244**	**1124**
	Signetics	54F244	
54F32	**Motorola**	**MC54F32**	**1122**
	Signetics	54F32	
54F373	**Motorola**	**MC54F373**	**1126**
	Signetics	54F373	
54F374	**Motorola**	**MC54F374**	**1126**
	Signetics	54F374	
54F534	**Motorola**	**MC54F534**	**1127**
	Signetics	54F534	
54F74	**Motorola**	**MC54F74**	**1126**
	Signetics	54F74	
54H08	National	DM54H08	
54LS00	**Motorola**	**SN54LS00**	**1122**
	National	DM54LS00	
	SGS	T54LS00	
	Signetics	54LS00	
	TI	**SN54LS00**	**715**
54LS02	**Motorola**	**SN54LS02**	**1122**
	National	DM54LS02	
	SGS	T54LS02	
	Signetics	54LS02	
	TI	**SN54LS02**	**715**
54LS03	**Motorola**	**SN54LS03**	**1122**
	National	DM54LS03	
	SGS	T54LS03	
	TI	**SN54LS03**	**715**
54LS04	**Motorola**	**SN54LS04**	**1124**
	National	DM54LS04	
	SGS	T54LS04	
	Signetics	54LS04	
	TI	**SN54LS04**	**715**
54LS05	**Motorola**	**SN54LS05**	**1124**
	National	DM54LS05	
	SGS	T54LS05	
	TI	**SN54LS05**	**715**
54LS08	**Motorola**	**SN54LS08**	**1122**
	National	DM54LS08	
	SGS	T54LS08	
	Signetics	54LS08	
	TI	**SN54LS08**	**715**
54LS09	**Motorola**	**SN54LS09**	**1122**
	National	DM54LS09	
	SGS	T54LS09	
	TI	**SN54LS09**	**715**
54LS10	**Motorola**	**SN54LS10**	**1122**
	National	DM54LS10	
	SGS	T54LS10	
	Signetics	54LS10	
	TI	**SN54LS10**	**715**
54LS109	SGS	T54LS109	
54LS11	**Motorola**	**SN54LS11**	**1122**
	National	DM54LS11	
	SGS	T54LS11	
	TI	**SN54LS11**	**715**
54LS112	SGS	T54LS112	
54LS113	SGS	T54LS113	
54LS114	SGS	T54LS114	
54LS125A	Motorola	SN54LS125	
		SN54LS125A	**1124**
	National	DM54LS125	
	SGS	T54LS125	
	Signetics	54LS125A	
	TI	**SN54LS125A**	**715**
54LS126	SGS	T54LS126	
54LS13	**Motorola**	**SN54LS13**	**1125**
	National	DM54LS13	
	SGS	T54LS13	
	TI	**SN54LS13**	**715**
54LS133	**Motorola**	**SN54LS133**	**1122**
	SGS	T54LS133	
54LS136	**Motorola**	**SN54LS136**	**1123**
	National	DM54LS136	
	SGS	T54LS136	
	Signetics	54LS136	
	TI	**SN54LS136**	**715**
54LS138	**Motorola**	**SN54LS138**	**1130**
	National	DM54LS138	
	SGS	T54LS138	
	Signetics	54LS138	
	TI	**SN54LS138**	**715**
54LS139	**Motorola**	**SN54LS139**	**1130**
	National	DM54LS139	
	SGS	T54LS139	
	Signetics	54LS139	
	TI	**SN54LS139A**	**715**
54LS14	**Motorola**	**SN54LS14**	**1125**
	National	DM54LS14	
	SGS	T54LS14	
	Signetics	54LS14	
	TI	**SN54LS14**	**715**
54LS15	**Motorola**	**SN54LS15**	**1122**
	National	DM54LS15	
	SGS	T54LS15	
	TI	**SN54LS15**	**715**
54LS151	**Motorola**	**SN54LS151**	**1129**
	National	DM54LS151	
	SGS	T54LS151	
	Signetics	54LS151	
	TI	**SN54LS151**	**715**
54LS152	Cypress	CY7C166	
	NEC	MPD4363	
	SGS	T54LS152	
54LS153	**Motorola**	**SN54LS153**	**1129**
	National	DM54LS153	
	SGS	T54LS153	
	Signetics	54LS153	
	TI	**SN54LS153**	**715**
54LS155	**Motorola**	**SN54LS155**	**1130**
	National	DM54LS155	
	SGS	T54LS155	
	TI	**SN54LS155A**	**715**
54LS156	**Motorola**	**SN54LS156**	**1130**
	National	DM54LS156	
	SGS	T54LS156	
	TI	**SN54LS156**	**715**
54LS157	**Motorola**	**SN54LS157**	**1129**
	National	DM54LS157	
	SGS	T54LS157	
	Signetics	54LS157	
	TI	**SN54LS157**	**715**
54LS158	**Motorola**	**SN54LS158**	**1129**
	National	DM54LS158	
	SGS	T54LS158	
	Signetics	54LS158	
	TI	**SN54LS158**	**715**
54LS160A	**Motorola**	**SN54LS160A**	**1127**
	SGS	T54LS160	
	Signetics	54LS160A	
	TI	**SN54LS160A**	**715**
54LS161A	**Motorola**	**SN54LS161A**	**1127**
	National	DM54LS161A	
	SGS	T54LS161	
	Signetics	54LS161A	
	TI	**SN54LS161A**	**715**
54LS162A	**Motorola**	**SN54LS162A**	**1127**
	National	DM54LS162A	
	SGS	T54LS162	
	Signetics	54LS162A	
	TI	**SN54LS162A**	**715**
54LS163A	**Motorola**	**SN54LS163A**	**1127**
	National	DM54LS163	
		DM54LS163A	
	SGS	T54LS163	
	Signetics	54LS163A	
	TI	**SN54LS163A**	**715**
54LS164	**Motorola**	**SN54LS164**	**1128**
	National	DM54LS164	
	SGS	T54LS164	
		(Continued)	
54LS164	Signetics	54LS164	
	TI	**SN54LS164**	**715**
54LS165	**Motorola**	**SN54LS165**	**1128**
	TI	SN54LS165A	
54LS168	**Motorola**	**SN54LS168**	**1127**
	National	DM54LS168	
	SGS	T54LS168	
54LS169	**Motorola**	**SN54LS169**	**1127**
	National	DM54LS169	
	SGS	T54LS169	
	TI	SN54LS169B	
54LS170	National	DM54LS170	
	SGS	T54LS170	
	TI	SN54LS170	
54LS173	**Motorola**	**SN54LS173A**	**1126**
	National	DM54LS173	
	Signetics	54LS173	
	TI	SN54LS173A	
54LS174	**Motorola**	**SN54LS174**	**1126**
	National	DM54LS174	
	SGS	T54LS174	
	Signetics	54LS174	
	TI	SN54LS174	
54LS175	**Motorola**	**SN54LS175**	**1126**
	National	DM54LS175	
	SGS	T54LS175	
	Signetics	54LS175	
	TI	SN54LS175	
54LS181	**Motorola**	**SN54LS181**	**1132**
	SGS	T54LS181	
	Signetics	54LS181	
	TI	SN54LS181	
54LS192	**Motorola**	**SN54LS192**	**1127**
	National	DM54LS192	
	Raytheon	54LS192	
	SGS	T54LS192	
	Signetics	54LS192	
	TI	SN54LS192	
54LS193	**Motorola**	**SN54LS193**	**1127**
	National	DM54LS193	
	SGS	T54LS193	
	Signetics	54LS193	
	TI	SN54LS193	
54LS194A	**Motorola**	**SN54LS194A**	**1128**
	SGS	T54LS194	
	TI	SN54LS194A	
54LS195A	**Motorola**	**SN54LS195A**	**1128**
	SGS	T54LS195	
	Signetics	54LS195A	
	TI	SN54LS195A	
54LS20	**Motorola**	**SN54LS20**	**1122**
	National	DM54LS20	
	SGS	T54LS20	
	Signetics	54LS20	
	TI	**SN54LS20**	**715**
54LS21	**Motorola**	**SN54LS21**	**1122**
	National	DM54LS21	
	SGS	T54LS21	
	TI	**SN54LS21**	**715**
54LS22	**Motorola**	**SN54LS22**	**1122**
	National	DM54LS22	
	SGS	T54LS22	
	TI	**SN54LS22**	**715**
54LS240	MMI	SN54LS240	
	Motorola	**SN54LS240**	**1124**
	SGS	T54LS240	
	TI	SN54LS240	
54LS241	MMI	SN54LS241	
	Motorola	**SN54LS241**	**1124**
	SGS	T54LS241	
	TI	SN54LS241	
54LS244	MMI	SN54LS244	
	Motorola	**SN54LS244**	**1124**
	SGS	T54LS244	
	TI	SN54LS244	
54LS245	MMI	SN54LS245	
	Motorola	**SN54LS245**	**1124**
	National	DM54LS245	
	Signetics	54LS245	
	TI	SN54LS245	
54LS247	**Motorola**	**SN54LS247**	**1130**
	National	DM54LS247	
	TI	SN54LS247	
54LS248	**Motorola**	**SN54LS248**	**1130**
	National	DM54LS248	
	Signetics	54LS248	
	TI	SN54LS248	
54LS249	**Motorola**	**SN54LS249**	**1130**
	National	DM54LS249	
	TI	SN54LS249	
54LS251	**Motorola**	**SN54LS251**	**1129**
	SGS	T54LS251	
		(Continued)	
54LS251	Signetics	54LS251	
	TI	SN54LS251	
54LS253	**Motorola**	**SN54LS253**	**1129**
	National	DM54LS253	
		DM7214	
	SGS	T54LS253	
	Signetics	54LS253	
	TI	SN54LS253	
54LS256	**Motorola**	**SN54LS256**	**1126**
	SGS	T54LS256	
54LS257A	National	DM54LS257	
	SGS	T54LS257	
54LS258A	**Motorola**	**SN54LS258A**	**1129**
	TI	SN54LS258B	
54LS259	**Motorola**	**SN54LS259**	**1126**
	SGS	T54LS259	
	TI	SN54LS259B	
54LS26	**Motorola**	**SN54LS26**	**1122**
	National	DM54LS26	
	SGS	T54LS26	
	TI	**SN54LS26**	**715**
54LS260	Motorola	SN54LS260A	
	SGS	T54LS260	
	Signetics	54LS260A	
54LS266	**Motorola**	**SN54LS266**	**1123**
	National	DM54LS266	
	SGS	T54LS266	
	Signetics	54LS266	
	TI	**SN54LS266**	**715**
54LS27	**Motorola**	**SN54LS27**	**1122**
	National	DM54LS27	
	SGS	T54LS27	
	TI	**SN54LS27**	**715**
54LS273	MMI	SN54LS273	
	Motorola	**SN54LS273**	**1126**
	SGS	T54LS273	
	Signetics	54LS273	
	TI	**SN54LS273**	**715**
54LS279	**Motorola**	**SN54LS279**	**1126**
	National	DM54LS279	
	SGS	T54LS279	
	Signetics	54LS279	
	TI	SN54LS279	
54LS28	**Motorola**	**SN54LS28**	**1122**
	SGS	T54LS28	
	Signetics	54LS194A	
		54LS28	
	TI	**SN54LS28**	**715**
54LS283	**Motorola**	**SN54LS283**	**1132**
	National	DM54LS283	
	SGS	T54LS283	
	Signetics	54LS283	
	TI	**SN54LS283**	**715**
54LS295A	**Motorola**	**SN54LS295A**	**1129**
	SGS	T54LS295	
	TI	SN54LS295B	
54LS298	SGS	T54LS298	
54LS30	**Motorola**	**SN54LS30**	**1122**
	National	DM54LS30	
	SGS	T54LS30	
	Signetics	54LS30	
	TI	**SN54LS30**	**715**
54LS32	**Motorola**	**SN54LS32**	**1122**
	National	DM54LS32	
	SGS	T54LS32	
	Signetics	54LS32	
	TI	**SN54LS32**	**715**
54LS322	**TI**	**SN54LS322A**	**715**
54LS323	AMD	SN74LS323	
	Fairchild	**74LS323**	**5311**
	Motorola	**SN74LS323**	**1129**
	TI	**SN54LS323**	**715**
		SN74LS323	
54LS33	**Motorola**	**SN54LS33**	**1122**
	SGS	T54LS33	
	TI	**SN54LS33**	**715**
54LS347	**TI**	**SN54LS347**	**715**
54LS352	**Motorola**	**SN54LS352**	**1129**
	National	DM54LS352	
	SGS	T54LS352	
	TI	**SN54LS352**	**715**
54LS353	**Motorola**	**SN54LS353**	**1129**
	National	DM54LS353	
	SGS	T54LS353	
		T54LS354	
	TI	**SN54LS353**	**715**
54LS365A	**Motorola**	**SN54LS365A**	**1124**
	SGS	T54LS365	
	Signetics	54LS365	
		54LS365A	
	TI	SN54LS365A	

◆ Discontinued

The manufacturers report their devices can be used as direct replacements.
Performance details often differ, so compare the specifications considering your requirements.

Manufacturer Device	Replacement Source	Device	IC Master Page
Fairchild		**(Cont'd)**	
54LS366A	Motorola	SN54LS366A	
	National	DM54LS366	
	SGS	T54LS366	
	Signetics	54LS366A	
	TI	SN54LS366A	
54LS367A	**Motorola**	**SN54LS367A**	1124
	National	DM54LS367	
	SGS	T54LS367	
	Signetics	54LS367	
		54LS367A	
	TI	SN54LS367A	
54LS368A	**Motorola**	**SN54LS368A**	1124
	National	DM54LS368	
	SGS	T54LS368	
	Signetics	54LS368	
		54LS368A	
	TI	SN54LS368A	
54LS37	**Motorola**	**SN54LS37**	1122
	National	DM54LS37	
	SGS	T54LS37	
	Signetics	54LS37	
	TI	**SN54LS37**	715
54LS374	MMI	SN54LS374	
	Motorola	**SN54LS374**	1126
	National	DM54LS374	
	SGS	T54LS374	
	TI	**SN54LS374**	715
54LS375	**Motorola**	**SN54LS375**	1126
	Signetics	54LS375	
	TI	**SN54LS375**	715
54LS377	MMI	SN54LS377	
	Motorola	**SN54LS377**	1126
	SGS	T54LS377	
	Signetics	54LS377	
	TI	**SN54LS377**	715
54LS378	SGS	T54LS378	
54LS379	SGS	T54LS379	
54LS38	**Motorola**	**SN54LS38**	1122
	National	DM54LS38	
	SGS	T54LS38	
	TI	**SN54LS38**	715
54LS395	SGS	T54LS395	
	Signetics	54LS395	
54LS40	**Motorola**	**SN54LS40**	1122
	National	DM54LS40	
	SGS	T54LS40	
	TI	**SN54LS40**	715
54LS42	**Motorola**	**SN54LS42**	1130
	National	DM54LS42	
	SGS	T54LS42	
	Signetics	54LS42	
	TI	**SN54LS42**	715
54LS47	**Motorola**	**SN54LS47**	1130
	National	DM54LS47	
	TI	**SN54LS47**	715
54LS48	**Motorola**	**SN54LS48**	1130,1131
	National	DM54LS48	
	TI	**SN54LS48**	715
54LS49	**Motorola**	**SN54LS49**	1130
	National	DM54LS49	
	TI	**SN54LS49**	715
54LS490	**Motorola**	**SN54LS490**	1127
	SGS	T54LS490	
	TI	**SN54LS490**	716
54LS51	**Motorola**	**SN54LS51**	1123
	National	DM54LS51	
	SGS	T54LS51	
	Signetics	54LS51	
	TI	**SN54LS51**	715
54LS54	**Motorola**	**SN54LS54**	1123
	National	DM54LS54	
	SGS	T54LS54	
	TI	**SN54LS54**	715
54LS55	**Motorola**	**SN54LS55**	1123
	National	DM54LS55	
	SGS	T54LS55	
54LS670	**Motorola**	**SN54LS670**	1128
	National	DM54LS670	
	SGS	T54LS670	
	Signetics	54LS670	
	TI	**SN54LS670**	716
54LS74	**Motorola**	**SN54LS74A**	1126
	National	DM54LS74	
		DM54LS74A	
	SGS	T54LS74	
	Signetics	54LS74	
	TI	**SN54LS74A**	715
54LS83A	**Motorola**	**SN54LS83A**	1132
	National	DM54LS83A	
		(Continued)	
54LS83A	SGS	T54LS83	
	Signetics	54LS83	
		54LS83A	
	TI	**SN54LS83A**	715
54LS85	**Motorola**	**SN54LS85**	1131
	National	DM54LS85	
	Signetics	54LS85	
	TI	**SN54LS85**	715
54LS95B	**Motorola**	**SN54LS95B**	1128
	National	DM54LS95B	
	SGS	T54LS95	
	Signetics	54LS95B	
	TI	SN54LS95B	
◆55107	Motorola	MC55107	
	National	DS55107	
		LM55107A	
	TI	**SN55107A**	721
		SN55107B	721
55108	Motorola	MC55108	
	National	DS55108	
		LM55108A	
	TI	**SN55108A**	721
		SN55108B	721
◆55110	**TI**	**SN55110A**	721
◆55450	Signetics	55450	
	SiliconG	SG55450	
	TI	SN55450	
55451	National	DS55451	
	Signetics	55451	
	SiliconG	SG55451	
	TI	SN55451	
◆55452	National	DS55452	
	Signetics	55452	
	SiliconG	SG55452	
	TI	SN55452	
55453	National	DS55453	
		LM55453	
	Signetics	55453	
	SiliconG	SG55453	
	TI	SN55453	
◆55454	National	DS55454	
	Signetics	55454	
	SiliconG	SG55454	
	TI	SN55454	
7400	National	DM7400	
	Signetics	**7400**	1156
	TI	SN7400	
	Toshiba	TC7400	
7401	National	DM7401	
	TI	SN7401	
7402	National	DM7402	
	Signetics	**7402**	1156
	TI	SN7402	
7403	National	DM7403	
	Signetics	**7403**	1156
	TI	SN7403	
7404	National	DM7404	
	Signetics	**7404**	1156
	TI	SN7404	
	Toshiba	TC7404	
7405	National	DM7405	
	Signetics	**7405**	1156
	TI	SN7405	
7406	National	DM7406	
	Signetics	**7406**	1156
	TI	SN7406	
7407	Hitachi	HD7407	
	National	DM7407	
	Signetics	**7407**	1156
	TI	SN7407	
7408	National	DM7408	
	Signetics	**7408**	1156
	TI	SN7408	
7409	National	DM7409	
	TI	SN7409	
7410	National	DM7410	
	Signetics	**7410**	1156
	TI	SN7410	
	Toshiba	TC7410	
74107	National	DM74107	
	Signetics	**74107**	1156
	TI	SN74107	
7411	Hitachi	HD7411	
	National	DM7411	
	Signetics	**7411**	1156
7412	TI	SN7412	
74121	National	DM74121	
	Signetics	**74121**	1157
	TI	SN74121	
74122	Fairchild	9601	
	National	DM8601	
		DM9601	
		(Continued)	
74122	Raytheon	RF8601	
		RF9601	
	Signetics	**N8T22**	1175
		S8T22	
	TI	SN74122	
74123	National	DM74123	
	Signetics	**74123**	1157
	TI	SN74123	
74125	National	DM74125	
		DM8093	
	Signetics	**74125**	1157
	TI	SN74125	
		SN74425	
74126	National	DM74126	
		DM8094	
	Signetics	**74126**	1157
	TI	SN74126	
		SN74426	
7413	National	DM7413	
	Signetics	**7413**	1156
	TI	SN7413	
74132	National	DM74132	
	Signetics	**74132**	1157
	TI	SN74132	
74136	TI	SN74136	
7414	National	DM7414	
	Signetics	**7414**	1156
	TI	SN7414	
74141	Fairchild	93141	
	Hitachi	HD7441	
	National	DM74141	
		DM7441	
	Signetics	74141	
		7441	
	TI	SN74141	
74145	National	DM74145	
	Signetics	**74145**	1157
	TI	SN74145	
74150	National	DM74150	
	Signetics	**74150**	1157
	TI	SN74150	
74153	National	DM74153	
	Signetics	**74153**	1157
	TI	SN74153	
74155	National	DM74155	
	Signetics	**74155**	1157
	TI	SN74155	
74156	National	DM74156	
	Signetics	**74156**	1157
	TI	SN74156	
74159	TI	SN74159	
7416	National	DM7416	
	Signetics	**7416**	1156
	TI	SN7416	
74160	National	DM74160	
	Signetics	**74160**	1157
	TI	SN74160	
74161	National	DM74161	
	Signetics	**74161**	1157
	TI	SN74161	
74162	National	DM74162	
	TI	SN74162	
74163	National	DM74163	
	Signetics	**74163**	1157
	TI	SN74163	
74165	National	DM74165	
		DM8590	
	Signetics	**74165**	1157
	TI	SN74165	
74166	National	DM74166	
	Signetics	**74166**	1157
	TI	SN74166	
7417	National	DM7417	
	Signetics	**7417**	1156
	TI	SN7417	
74170	Hitachi	HD74170	
	National	DM74170	
	Signetics	**74170**	1157
	TI	SN74170	
74173	National	DM74173	
		DM8551	
	Raytheon	RC8T10	
	Signetics	**N8T10**	1175
	TI	SN74173	
74174	National	DM74174	
	Signetics	**74174**	1157
	TI	SN74174	
74175	National	DM74175	
	Signetics	**74175**	1157
	TI	SN74175	
74176	Fairchild	96176	
	National	DM74176	
		(Continued)	
74176	National	DM8280	
	Raytheon	RC8280	
	Signetics	74176	
	TI	SN74176	
74177	National	DM74177	
		DM8281	
	Raytheon	RC8281	
	Signetics	74177	
	TI	SN74177	
74179	Raytheon	RC8271	
	Signetics	**N8271**	1175
	TI	SN74179	
74180	National	DM74180	
	Signetics	**74180**	1157
	TI	SN74180	
74190	National	DM74190	
	Signetics	**74190**	1157
	TI	SN74190	
74191	National	DM74191	
	Signetics	**74191**	1157
	TI	SN74191	
74192	National	DM74192	
		DM8560	
	Raytheon	RC9360	
	Signetics	**74192**	1157
	TI	SN74192	
74194	National	DM74194	
	Signetics	**74194**	1157
	TI	SN74194	
74195	National	DM74195	
	Signetics	**74195**	1157
	TI	SN74195	
74196	National	DM74196	
		DM8290	
	Raytheon	RC8290	
	Signetics	74196	
	TI	SN74196	
74197	National	DM74197	
		DM8291	
	Raytheon	RC8291	
	Signetics	74197	
	TI	SN74197	
74198	National	DM74198	
	Signetics	74198	
	TI	SN74198	
74199	National	DM74199	
	Signetics	**74199**	1157
	TI	SN74199	
7420	Fairchild	9004	
	National	DM7420	
		DM9004C	
	Signetics	**7420**	1156
	TI	SN7420	
	Toshiba	TC7420	
7421	**Signetics**	**7421**	1156
7422	TI	SN7422	
7423	National	DM7423	
	TI	SN7423	
7425	National	DM7425	
	TI	SN7425	
7426	National	DM7426	
		DM8810	
	Signetics	**7426**	1156
	TI	SN7426	
7427	National	DM7427	
	Signetics	**7427**	1156
	TI	SN7427	
74279	**Signetics**	**74279**	1158
	TI	SN74279	
74283	TI	SN74283	
74290	TI	SN74290	
74293	TI	SN74293	
74298	**Signetics**	**74298**	1158
	TI	SN74298	
7430	National	DM7430	
	Signetics	**7430**	1156
	TI	SN7430	
7432	National	DM7432	
	Signetics	**7432**	1156
	TI	SN7432	
7437	National	DM7437	
	Signetics	**7437**	1156
	TI	SN7437	
7438	National	DM7438	
	Signetics	**7438**	1156
	TI	SN7438	
7439	**Signetics**	**7439**	1156
7440	National	DM7440	
	Signetics	**7440**	1156
	TI	SN7440	
7442	National	DM7442	
		DM8842	
		(Continued)	

◆ Discontinued

Bold face device numbers indicate manufacturers data is provided in the IC Master on the pages noted.

ALTERNATE SOURCE DIRECTORY

Fairchild (Cont'd)

Manufacturer Device	Replacement Source	Device	IC Master Page
7442	**Signetics**	**7442**	**1156**
	TI	SN7442A	
7445	National	DM7445	
	Signetics	**7445**	**1156**
	TI	SN7445	
7446	TI	SN7446A	
7450	National	DM7450	
	Signetics	**7450**	**1156**
	TI	SN7450	
7451	Hitachi	HD7451	
	National	DM7451	
	Signetics	**7451**	**1156**
	TI	SN7451	
7453	National	DM7453	
	TI	SN7453	
7454	National	DM7454	
	TI	SN7454	
7460	National	DM7460	
	TI	SN7460	
7470	Hitachi	HD7470	
	National	DM7470	
	TI	SN7470	
7472	National	DM7472	
	TI	SN7472	
7473	National	DM7473	
	Signetics	**7473**	**1156**
	TI	SN7473	
7474	National	DM7474	
	Signetics	**7474**	**1156**
	TI	SN7474	
7475	National	DM7475	
	Signetics	**7475**	**1156**
	TI	SN7475	
7476	National	DM7476	
	Signetics	**7476**	**1156**
	TI	SN7476	
7485	National	DM7485	
	Signetics	**7485**	**1156**
	TI	SN7485	
7486	National	DM7486	
	Signetics	**7486**	**1156**
	TI	SN7486	
7489	National	DM7489	
		DM74S289	
		DM8589	
		MM74S289	
	Signetics	74S289	
		N82S25	
	TI	SN74S289B	
7494	Hitachi	HD7494	
	Signetics	**7494**	**1156**
	TI	SN7494	
7496	National	DM7496	
	Signetics	**7496**	**1156**
	TI	SN7496	
7497	TI	SN7497	
74F00	**Motorola**	**MC74F00**	**1122**
	Signetics	**74F00**	**1156**
74F02	**Motorola**	**MC74F02**	**1122**
	Signetics	**74F02**	**1156**
74F04	**Motorola**	**MC74F04**	**1124**
	Signetics	**74F04**	**1156**
74F08	**Motorola**	**MC74F08**	**1122**
	Signetics	**74F08**	**1156**
74F10	**Motorola**	**MC74F10**	**1122**
	Signetics	**74F10**	**1156**
74F109	**Motorola**	**MC74F109**	**1126**
	Signetics	**74F109**	**1156**
74F11	**Motorola**	**MC74F11**	**1122**
	Signetics	**74F11**	**1156**
74F138	**Motorola**	**MC74F138**	**1130**
	Signetics	**74F138**	**1157**
74F139	**Motorola**	**MC74F139**	**1130**
	Signetics	**74F139**	**1157**
74F157	**Signetics**	**74F157**	**1157**
74F158	**Signetics**	**74F158**	**1157**
74F189	Cypress	CY7F189	
	Motorola	MC74F189	
74F20	**Motorola**	**MC74F20**	**1122**
	Signetics	**74F20**	**1156**
74F240	**Motorola**	**MC74F240**	**1124**
	Signetics	**74F240**	**1157**
74F241	**Motorola**	**MC74F241**	**1124**
	Signetics	**74F241**	**1157**
74F242	**Motorola**	**MC74F242**	**1124**
	Signetics	**74F242**	**1158**
74F243	**Motorola**	**MC74F243**	**1124**
	Signetics	**74F243**	**1158**
74F244	**Motorola**	**MC74F244**	**1124**
	Signetics	**74F244**	**1158**
74F257	**Signetics**	**74F257**	**1158**
74F258	**Signetics**	**74F258**	**1158**
74F32	**Motorola**	**MC74F32**	**1122**
	Signetics	**74F32**	**1156**
74F373	**Motorola**	**MC74F373**	**1126**
	Signetics	**74F373**	**1158**
74F374	**Motorola**	**MC74F374**	**1126**
	Signetics	**74F374**	**1158**
74F413	Cypress	CY7C401	
	MMI	**57401**	**691**
	National	DM77S401	
74F521	**Signetics**	**74F521**	**1159**
74F533	**Motorola**	**MC74F533**	**1126**
	Signetics	**74F533**	**1159**
74F534	**Motorola**	**MC74F534**	**1127**
	Signetics	**74F534**	**1159**
74F557	MMI	74S557	
74F558	AMD	AM25S557	
		AM25S558	
	LogicDev	LMU558	
	MMI	74S558	
		SN54558	
		SN74558	
74F74	**Motorola**	**MC74F74**	**1126**
	Signetics	**74F74**	**1156**
74F86	**Signetics**	**74F86**	**1156**
74H00	National	DM74H00	
	TI	SN74H00	
74H01	Fairchild	74H08	
	National	DM74H01	
		DM74H08	
	TI	SN74H01	
74H04	National	DM74H04	
	TI	SN74H04	
74H05	TI	SN74H05	
74H08	Fairchild	74H01	
	National	DM74H01	
		DM74H08	
	TI	SN74H01	
74H10	National	DM74H10	
	TI	SN74H10	
74H101	Signetics	74H101	
	TI	SN74H101	
74H103	National	DM74H103	
	TI	SN74H103	
74H106	National	DM74H106	
	TI	SN74H106	
74H108	National	DM74H108	
	TI	SN74H108	
74H11	National	DM74H11	
	TI	SN74H11	
74H183	TI	SN74H183	
74H20	National	DM74H20	
	TI	SN74H20	
74H21	National	DM74H21	
	TI	SN74H21	
74H22	TI	SN74H22	
74H30	National	DM74H30	
	TI	SN74H30	
74H40	National	DM74H40	
	TI	SN74H40	
74H50	National	DM74H50	
	TI	SN74H50	
74H51	National	DM74H51	
	TI	SN74H51	
74H52	TI	SN74H52	
74H53	TI	SN74H53	
74H54	TI	SN74H54	
74H55	TI	SN74H55	
74H61	TI	SN74H61	
74H62	National	DM74H62	
	TI	SN74H62	
74H73	TI	SN74H73	
74H74	National	DM74H74	
	TI	SN74H74	
74H87	TI	SN74H87	
74LS00	Hitachi	HD74LS00	
	Motorola	**SN74LS00**	**1122**
	National	DM74LS00	
	Panasonic	DN74LS00	
	SGS	T74LS00	
	Signetics	**74LS00**	**1156**
	TI	SN74LS00	
74LS01	Hitachi	HD74LS01	
	Motorola	**SN74LS01**	**1122**
	National	DM74LS01	
	Panasonic	DN74LS01	
	Signetics	**74LS01**	**1156**
	TI	SN74LS01	
74LS02	Hitachi	HD74LS02	
	Motorola	**SN74LS02**	**1122**
	National	DM74LS02	
			(Continued)
74LS02	Panasonic	DN74LS02	
	SGS	T74LS02	
	Signetics	**74LS02**	**1156**
	TI	SN74LS02	
74LS03	Hitachi	HD74LS03	
	Motorola	**SN74LS03**	**1122**
	National	DM74LS03	
	Panasonic	DN74LS03	
	SGS	T74LS03	
	TI	SN74LS03	
74LS04	Hitachi	HD74LS04	
	Motorola	**SN74LS04**	**1124**
	National	DM74LS04	
	Panasonic	DN74LS04	
	SGS	T74LS04	
	Signetics	**74LS04**	**1156**
	TI	SN74LS04	
74LS05	Hitachi	HD74LS05	
	Motorola	**SN74LS05**	**1124**
	National	DM74LS05	
	Panasonic	DN74LS05	
	SGS	T74LS05	
	Signetics	**74LS05**	**1156**
	TI	SN74LS05	
74LS08	Hitachi	HD74LS08	
	Motorola	**SN74LS08**	**1122**
	National	DM74LS08	
	Panasonic	DN74LS08	
	SGS	T74LS08	
	Signetics	**74LS08**	**1156**
	TI	SN74LS08	
74LS09	Hitachi	HD74LS09	
	Motorola	**SN74LS09**	**1122**
	National	DM74LS09	
	Panasonic	DN74LS09	
	SGS	T74LS09	
	TI	SN74LS09	
74LS10	Hitachi	HD74LS10	
	Motorola	**SN74LS10**	**1122**
	National	DM74LS10	
	Panasonic	DN74LS10	
	SGS	T74LS10	
	Signetics	**74LS10**	**1156**
	TI	SN74LS10	
74LS109	Hitachi	HD74LS109	
	Motorola	SN74LS109	
		SN74LS109A	**1126**
	National	DM74LS109	
	Panasonic	DN74LS109	
	SGS	T74LS109	
	Signetics	**74LS109**	**1156**
	TI	SN74LS109A	
74LS11	Hitachi	HD74LS11	
	Motorola	**SN74LS11**	**1122**
	National	DM74LS11	
	Panasonic	DN74LS11	
	SGS	T74LS11	
	Signetics	**74LS11**	**1156**
	TI	SN74LS11	
74LS112	Hitachi	HD74LS112	
	Motorola	**SN74LS112A**	**1126**
	National	DM74LS112	
	Panasonic	DN74LS112	
	SGS	T74LS112	
	Signetics	**74LS112**	**1156**
	TI	SN74LS112A	
74LS113	Hitachi	HD74LS113	
	Motorola	**SN74LS113A**	**1126**
	National	DM74LS113	
	Panasonic	DN74LS113	
	SGS	T74LS113	
	Signetics	**74LS113**	**1156**
	TI	SN74LS113A	
74LS114	Hitachi	HD74LS114	
	Motorola	**SN74LS114A**	**1126**
	National	DM74LS114	
	Panasonic	DN74LS114	
	SGS	T74LS114	
	TI	SN74LS114A	
74LS125A	**Motorola**	**SN74LS125A**	**1124**
	National	DM74LS125	
	Panasonic	DN74LS125A	
	SGS	T74LS125	
	Signetics	**74LS125A**	**1157**
	TI	SN74LS125A	
74LS126	**Motorola**	**SN74LS126A**	**1124**
	National	DM74LS126	
	SGS	T74LS126	
	Signetics	**74LS126A**	**1157**
	TI	SN74LS126A	
74LS13	Hitachi	HD74LS13	
	Motorola	**SN74LS13**	**1125**
			(Continued)
74LS13	National	DM74LS13	
	Panasonic	DN74LS13	
	SGS	T74LS13	
	Signetics	**74LS13**	**1156**
	TI	SN74LS13	
74LS132	Hitachi	HD74LS132	
	Motorola	**SN74LS132**	**1125**
	National	DM74LS132	
	Panasonic	DN74LS132	
	SGS	T74LS132	
	Signetics	**74LS132**	**1157**
	TI	SN74LS132	
74LS133	**Motorola**	**SN74LS133**	**1122**
	SGS	TL74LS133	
74LS136	Hitachi	HD74LS136	
	Motorola	**SN74LS136**	**1123**
	National	DM74LS136	
	Panasonic	DN74LS136	
	SGS	T74LS136	
	Signetics	**74LS136**	**1157**
	TI	SN74LS136	
74LS138	Hitachi	HD74LS138	
	Motorola	**SN74LS138**	**1130**
	National	DM74LS138	
	Panasonic	DN74LS138	
	SGS	T74LS138	
	Signetics	**74LS138**	**1157**
	TI	SN74LS138	
74LS139	Hitachi	HD74LS139	
	Motorola	**SN74LS139**	**1130**
	National	DM74LS139	
	Panasonic	DN74LS139	
	SGS	T74LS139	
	Signetics	**74LS139**	**1157**
	TI	SN74LS139A	
74LS14	Hitachi	HD74LS14	
	Motorola	**SN74LS14**	**1125**
	National	DM74LS14	
	Panasonic	DN74LS14	
	Signetics	**74LS14**	**1156**
	TI	SN74LS14	
74LS145	**Motorola**	**SN74LS145**	**1130**
	Panasonic	DN74LS145	
	TI	SN74LS145	
74LS15	**Motorola**	**SN74LS15**	**1122**
	National	DM74LS15	
	Panasonic	DN74LS15	
	SGS	T74LS15	
	TI	SN74LS15	
74LS151	Hitachi	HD74LS151	
		HD74LS151A	
	Motorola	**SN74LS151**	**1129**
	National	DM74LS151	
	Panasonic	DN74LS151	
	SGS	T74LS151	
	Signetics	**74LS151**	**1157**
	TI	SN74LS151	
74LS153	Hitachi	HD74LS153	
	Motorola	**SN74LS153**	**1129**
	National	DM74LS153	
	Panasonic	DN74LS153	
	SGS	T74LS153	
	Signetics	**74LS153**	**1157**
	TI	SN74LS153	
74LS155	Hitachi	HD74LS155	
	Motorola	**SN74LS155**	**1130**
	National	DM74LS155	
	Panasonic	DN74LS155	
	Signetics	**74LS155**	**1157**
	TI	SN74LS155A	
74LS156	Hitachi	HD74LS156	
	Motorola	**SN74LS156**	**1130**
	National	DM74LS156	
	Panasonic	DN74LS156	
	SGS	T74LS156	
	Signetics	**74LS156**	**1157**
	TI	SN74LS156	
74LS157	Hitachi	HD74LS157	
	Motorola	**SN74LS157**	**1129**
	National	DM74LS157	
	Panasonic	DN74LS157	
	SGS	T74LS157	
	Signetics	**74LS157**	**1157**
	TI	SN74LS157	
74LS158	Hitachi	HD74LS158	
	Motorola	**SN74LS158**	**1129**
	National	DM74LS158	
	Panasonic	DN74LS158	
	SGS	T74LS158	
	Signetics	**74LS158**	**1157**
	TI.	SN74LS158	

◆ Discontinued

The manufacturers report their devices can be used as direct replacements.
Performance details often differ, so compare the specifications considering your requirements.

Fairchild (Cont'd)

Manufacturer Device	Replacement Source	Device	IC Master Page
74LS160	Hitachi	HD74LS160A	
	Motorola	**SN74LS160A**	1127
	National	DM74LS160	
	Panasonic	DN74LS160A	
	SGS	T74LS160	
	Signetics	74LS160	
		74LS160A	1157
	TI	SN74LS160A	
74LS161A	Hitachi	HD74LS161A	
	Motorola	**SN74LS161A**	1127
	National	DM74LS161	
	Panasonic	DN74LS161A	
	SGS	T74LS161	
	Signetics	**74LS161A**	1157
	TI	SN74LS161A	
74LS162	Hitachi	HD74LS162A	
	Motorola	**SN74LS162A**	1127
	National	DM74LS162	
	Panasonic	DN74LS162A	
	SGS	T74LS162	
	Signetics	**74LS162A**	1157
	TI	SN74LS162A	
74LS163	Hitachi	HD74LS163	
		HD74LS163A	
	Motorola	**SN74LS163A**	1127
	National	DM74LS163	
	Panasonic	DN74LS163A	
	SGS	T74LS163	
	Signetics	**74LS163A**	1157
	TI	SN74LS163A	
74LS164	Hitachi	HD74LS164	
	Motorola	SN74LS164A	
	National	DM74LS164	
	Panasonic	DN74LS164	
	SGS	T74LS164	
	Signetics	**74LS164**	1157
		74LS164A	
	TI	SN74LS164	
74LS165	**Motorola**	**SN74LS165**	1128
	SGS	T74LS165	
	TI	SN74LS165A	
74LS168	SGS	T74LS168	
74LS169	Hitachi	HD74LS169	
	Motorola	**SN74LS169**	1127
	National	DM74LS169	
	SGS	T74LS169	
	Signetics	**74LS169A**	1157
	TI	SN74LS169	
74LS170	**Motorola**	**SN74LS170**	1128
	National	DM74LS170	
	Panasonic	DN74LS170	
	SGS	T74LS170	
	Signetics	**74LS170**	1157
	TI	SN74LS170	
74LS173	**Motorola**	**SN74LS173A**	1126
	National	DM74LS173	
	Panasonic	DN74LS173	
	SGS	T74LS173	
	Signetics	**74LS173**	1157,1158
	TI	SN74LS173A	
74LS174	Hitachi	HD74LS174	
	Motorola	**SN74LS174**	1126
	National	DM74LS174	
	Panasonic	DN74LS174	
	SGS	T74LS174	
	Signetics	**74LS174**	1157
	TI	SN74LS174	
74LS175	Hitachi	HD74LS175	
	Motorola	**SN74LS175**	1126
	Panasonic	DN74LS175	
	SGS	T74LS175	
	Signetics	74LS175	
	TI	SN74LS175	
74LS181	Hitachi	HD74LS181	
	Motorola	**SN74LS181**	1132
	SGS	T74LS181	
	Signetics	**74LS181**	1157
	TI	SN74LS181	
74LS189	Cypress	CY74S189	
	National	DM74LS189	
	TI	SN74LS189A	
74LS190	Hitachi	HD74LS190	
	Motorola	**SN74LS190**	1127
	National	DM74LS190	
	Panasonic	DN74LS190	
	SGS	T74LS190	
	TI	SN74LS190	
74LS191	Hitachi	HD74LS191	
	Motorola	**SN74LS191**	1127
			(Continued)
74LS191	National	DM74LS191	
	Panasonic	DN74LS191	
	SGS	T74LS191	
	Signetics	**74LS191**	1157
	TI	SN74LS191	
74LS192	Hitachi	HD74LS192	
	Motorola	**SN74LS192**	1127
	National	DM74LS192	
	Panasonic	DN74LS192	
	SGS	T74LS192	
	Signetics	**74LS192**	1157
	TI	SN74LS192	
74LS193	Hitachi	HD74LS193	
	Motorola	**SN74LS193**	1127
	National	DM74LS193	
	Panasonic	DN74LS193	
	SGS	T74LS193	
	Signetics	**74LS193**	1157
	TI	SN74LS193	
74LS194A	Hitachi	HD74LS194A	
	Motorola	**SN74LS194A**	1128
	National	DM74LS194	
	Panasonic	DN74LS194A	
	SGS	T74LS194A	
	Signetics	**74LS194A**	1157
	TI	SN74LS194A	
74LS195A	Hitachi	HD74LS195A	
	Motorola	**SN74LS195A**	1128
	National	DM74LS195	
	Panasonic	DN74LS195A	
	SGS	L7924	
		T74LS195A	
	Signetics	**74LS195A**	1157
	TI	SN74LS195A	
74LS196	Hitachi	HD74LS196	
	Motorola	**SN74LS196**	1127
	National	DM74LS196	
	Panasonic	DN74LS196	
	SGS	574LS196	
	Signetics	N82S80	
	TI	SN74LS196	
74LS197	Hitachi	HD74LS197	
	Motorola	**SN74LS197**	1127
	National	DM74LS197	
	Panasonic	DN74LS197	
	SGS	T74LS197	
	Signetics	**74LS197**	1157
	TI	SN74LS197	
74LS20	Hitachi	HD74LS20	
	Motorola	**SN74LS20**	1122
	National	DM74LS20	
	Panasonic	DN74LS20	
	SGS	T74LS20	
	Signetics	**74LS20**	1156
	TI	SN74LS20	
74LS21	Hitachi	HD74LS21	
	Motorola	**SN74LS21**	1122
	National	DM74LS21	
	Panasonic	DN74LS21	
	SGS	T74LS21	
	Signetics	**74LS21**	1156
	TI	SN74LS21	
74LS22	Hitachi	HD74LS22	
	Motorola	**SN74LS22**	1122
	National	DM74LS22	
	Panasonic	DN74LS22	
	SGS	T74LS22	
	TI	SN74LS22	
74LS221	Hitachi	HD74LS221	
	Motorola	**SN74LS221**	1131
	National	DM74LS221	
	TI	SN74LS221	
74LS240	Hitachi	HD74LS240	
	MMI	SN74LS240	
	Motorola	**SN74LS240**	1124
	Panasonic	DN74LS240	
	SGS	T74LS240	
	Signetics	**74LS240**	1157
	TI	SN74LS240	
74LS241	Hitachi	HD74LS241	
	MMI	SN74LS241	
	Motorola	**SN74LS241**	1124
	Panasonic	DN74LS241	
	SGS	T74LS241	
	Signetics	**74LS241**	1157
	TI	SN74LS241	
74LS242A	**Motorola**	**SN74LS242**	1124
	Signetics	**74LS242**	1158
	TI	SN74LS242	
74LS243A	**Motorola**	**SN74LS243**	1124
	Signetics	**74LS243**	1158
	TI	SN74LS243	
74LS244	Hitachi	HD74LS244	
	MMI	SN74LS244	
	Motorola	**SN74LS244**	1124
	Panasonic	DN74LS244	
	SGS	T74LS244	
	Signetics	**74LS244**	1158
	TI	SN74LS244	
74LS247	Hitachi	HD74LS247	
	Motorola	**SN74LS247**	1130
	National	DM74LS247	
	TI	SN74LS247	
74LS248	Hitachi	HD74LS248	
	Motorola	**SN74LS248**	1130
	National	DM74LS248	
	SGS	T74LS248	
	TI	SN74LS248	
74LS249	Hitachi	HD74LS249	
	Motorola	**SN74LS249**	1130
	National	DM74LS249	
	SGS	T74LS249	
	TI	SN74LS249	
74LS251	Hitachi	HD74LS251	
	Motorola	**SN74LS251**	1129
	National	DM74LS251	
	Panasonic	DN74LS251	
	SGS	T74LS251	
	Signetics	**74LS251**	1158
	TI	SN74LS251	
74LS253	Hitachi	HD74LS253	
	Motorola	**SN74LS253**	1129
	National	DM74LS253	
		DM8214	
	Panasonic	DN74LS253	
	SGS	T74LS253	
	Signetics	**74LS253**	1158
	TI	SN74LS253	
74LS256	**Motorola**	**SN74LS256**	1126
	Signetics	**74LS256**	1158
74LS257A	Hitachi	HD74LS257	
	Motorola	**SN74LS257A**	1129
	National	DM74LS257	
	SGS	T74LS257	
	Signetics	74LS257	
		74LS257A	1158
	TI	SN74LS257B	
74LS258A	Hitachi	HD74LS258	
	Motorola	**SN74LS258A**	1129
	National	DM74LS258	
	Panasonic	DN74LS258A	
	SGS	T74LS258	
	Signetics	74LS258	
	TI	SN74LS258B	
74LS259	**Motorola**	**SN74LS259**	1126
	SGS	T74LS259	
	Signetics	**74LS259**	1158
	TI	SN74LS259B	
74LS26	Hitachi	HD74LS26	
	Motorola	**SN74LS26**	1122
	National	DM74LS26	
	Panasonic	DN74LS26	
	SGS	T74LS26	
	Signetics	**74LS26**	1156
	TI	SN74LS26	
74LS260	**Motorola**	**SN74LS260**	1122
	Signetics	**74LS260**	1158
74LS266	**Motorola**	**SN74LS266**	1123
	National	DM74LS266	
	Panasonic	DN74LS266	
	Raytheon	RC8242	
	SGS	T74LS266	
	Signetics	**74LS266**	1158
		N8242	1175
	TI	SN74LS266	
74LS27	Hitachi	HD74LS27	
	Motorola	**SN74LS27**	1122
	National	DM74LS27	
	Panasonic	DN74LS27	
	SGS	T74LS27	
	Signetics	**74LS27**	1156
	TI	SN74LS27	
74LS273	MMI	SN74LS273	
	Motorola	**SN74LS273**	1126
	SGS	T74LS273	
	Signetics	74LS273	
	TI	SN74LS273	
74LS279	Hitachi	HD74LS279	
	Motorola	**SN74LS279**	1126
	National	DM74LS279	
	Panasonic	DN74LS279	
	SGS	T74LS279	
	Signetics	74LS279	
	TI	SN74LS279A	
74LS28	**Motorola**	**SN74LS28**	1122
	SGS	T74LS28	
	TI	SN74LS28	
74LS283	Hitachi	HD74LS283	
		HD74LS283A	
	Motorola	**SN74LS283**	1132
	National	DM74LS283	
	Panasonic	DN74LS283	
	SGS	T74LS283	
	Signetics	**74LS283**	1158
	TI	SN74LS283	
74LS289	National	DM74LS289	
	TI	SN74LS289A	
74LS290	Hitachi	HD74LS290	
	Motorola	**SN74LS290**	1127
	National	DM74LS290	
	Panasonic	DN74LS290	
	SGS	T74LS290	
	Signetics	**74LS290**	1158
	TI	SN74LS290	
74LS293	Hitachi	HD74LS293	
	Motorola	**SN74LS293**	1127
	National	DM74LS293	
	Panasonic	DN74LS293	
	SGS	T74LS293	
	Signetics	**74LS293**	1158
	TI	SN74LS293	
74LS295A	**Motorola**	**SN74LS295A**	1129
	SGS	T74LS295A	
	Signetics	74LS295A	
		74LS295B	1158
	TI	SN74LS295B	
74LS298	Hitachi	HD74LS298	
	Motorola	**SN74LS298**	1129
	SGS	T74LS298	
	Signetics	**74LS298**	1158
	TI	SN74LS298	
74LS299	AMD	SN74LS299	
	Hitachi	HD74LS299	
	Motorola	**SN74LS299**	1129
	SGS	T74LS299	
	TI	SN74LS299	
74LS30	Hitachi	HD74LS30	
	Motorola	**SN74LS30**	1122
	National	DM74LS30	
	Panasonic	DN74LS30	
	SGS	T74LS30	
	Signetics	**74LS30**	1156
	TI	SN74LS30	
74LS322	AMD	SN74LS322	
	Motorola	SN74LS322	
	TI	SN74LS322A	
74LS323	AMD	SN74LS323	
	Fairchild	**54LS323**	614
	Motorola	**SN74LS323**	1129
	TI	**SN54LS323**	715
		SN74LS323	
74LS33	**Motorola**	**SN74LS33**	1122
	Panasonic	DN74LS33	
	SGS	T74LS33	
	Signetics	**74LS33**	1156
	TI	SN74LS33	
74LS352	**Motorola**	**SN74LS352**	1129
	National	DM74LS352	
	SGS	T74LS352	
	TI	SN74LS352	
74LS353	**Motorola**	**SN74LS353**	1129
	National	DM74LS353	
	SGS	T74LS353	
	TI	SN74LS353	
74LS365A	**Motorola**	**SN74LS365A**	1124
	National	DM74LS365	
	Panasonic	DN74LS365A	
	SGS	T74LS365	
		T74LS365A	
	Signetics	74LS365	
		74LS365A	1158
	TI	SN74LS365A	
74LS366A	**Motorola**	**SN74LS366A**	1124
	National	DM74LS366	
	Panasonic	DN74LS366A	
	SGS	T74LS366	
		T74LS366A	
	Signetics	**74LS366A**	1158
	TI	SN74LS366A	
74LS367A	Hitachi	HD74LS367	
		HD74LS367A	
	Motorola	**SN74LS367A**	1124
	National	DM74LS367	
	Panasonic	DN74LS367A	
	SGS	T74LS367	
		T74LS367A	
			(Continued)

◆ Discontinued

Bold face device numbers indicate manufacturers data is provided in the IC Master on the pages noted.

Fairchild (Cont'd)

Manufacturer Device	Replacement Source	Device	IC Master Page
74LS367A	Signetics	74LS367	
		74LS367A	**1158**
	TI	SN74LS367A	
74LS368A	Hitachi	HD74LS368	
	Motorola	**SN74LS368A**	**1124**
	National	DM74LS368	
	Panasonic	DN74LS368A	
	SGS	T74LS368	
	Signetics	74LS368	
		74LS368A	**1158**
	TI	SN74LS368A	
74LS37	Hitachi	HD74LS37	
	Motorola	**SN74LS37**	**1122**
	National	DM74LS37	
	Panasonic	DN74LS37	
	SGS	T74LS37	
	Signetics	**74LS37**	**1156**
	TI	SN74LS37	
74LS373	MMI	SN74LS373	
	Motorola	**SN74LS373**	**1126**
	Panasonic	DN74LS373	
	SGS	T74LS373	
	Signetics	**74LS373**	**1158**
	TI	SN74LS373	
74LS374	MMI	SN74LS374	
	Motorola	**SN74LS374**	**1126**
	National	DM74LS374	
	SGS	T74LS374	
	Signetics	**74LS374**	**1158**
	TI	SN74LS374	
74LS375	**Motorola**	**SN74LS375**	**1126**
	Signetics	**74LS375**	**1158**
	TI	SN74LS375	
74LS377	MMI	SN74LS377	
	Motorola	**SN74LS377**	**1126**
	SGS	T74LS377	
	Signetics	**74LS377**	**1158**
	TI	SN74LS377	
74LS378	AMD	SN74LS378	
	Motorola	**SN74LS378**	**1126**
	SGS	T74LS378	
	Signetics	**74LS378**	**1158**
	TI	SN74LS378	
74LS379	AMD	SN74LS379	
	Motorola	**SN74LS379**	**1126**
	SGS	T74LS379	
	TI	SN74LS379	
74LS38	Hitachi	HD74LS38	
	Motorola	**SN74LS38**	**1122**
	National	DM74LS38	
	Panasonic	DN74LS38	
	SGS	T74LS38	
	Signetics	**74LS38**	**1156**
	TI	SN74LS38	
74LS390	**Motorola**	**SN74LS390**	**1127**
	Panasonic	DN74LS390	
	SGS	T74LS390	
	TI	SN74LS390	
74LS393	**Motorola**	**SN74LS393**	**1127**
	Panasonic	DN74LS393	
	SGS	T74LS393	
	Signetics	**74LS393**	**1158**
	TI	SN74LS393	
74LS395	National	DM74LS395	
	Panasonic	DN74LS395A	
	SGS	T74LS395	
	Signetics	74LS395	
	TI	SN74LS395A	
74LS40	Hitachi	HD74LS40	
	Motorola	**SN74LS40**	**1122**
	National	DM74LS40	
	Panasonic	DN74LS40	
	SGS	T74LS40	
	Signetics	**74LS40**	**1156**
	TI	SN74LS40	
74LS42	Hitachi	HD74LS42	
	Motorola	**SN74LS42**	**1130**
	National	DM74LS42	
	Panasonic	DN74LS42	
	SGS	T74LS42	
	Signetics	**74LS42**	**1156**
	TI	SN74LS42	
74LS47	Hitachi	HD74LS47	
	Motorola	**SN74LS47**	**1130**
	National	DM74LS47	
	SGS	T74LS47	
	TI	SN74LS47	
74LS48	Hitachi	HD74LS48	
	Motorola	**SN74LS48**	**1130**
	National	DM74LS48	

(Continued)

Manufacturer Device	Replacement Source	Device	IC Master Page
74LS48	SGS	T74LS48	
	Signetics	74LS48	
	TI	SN74LS48	
74LS49	Hitachi	HD74LS49	
	Motorola	**SN74LS49**	**1130**
	National	DM74LS49	
	SGS	T74LS49	
	TI	SN74LS49	
74LS490	**Motorola**	**SN74LS490**	**1127**
	Panasonic	DN74LS490	
	SGS	T74LS490	
	Signetics	**74LS490**	**1159**
	TI	SN74LS490	
74LS51	Hitachi	HD74LS51	
	Motorola	**SN74LS51**	**1123**
	National	DM74LS51	
	Panasonic	DN74LS51	
	SGS	T74LS51	
	Signetics	**74LS51**	**1156**
	TI	SN74LS51	
74LS54	Hitachi	HD74LS54	
	Motorola	**SN74LS54**	**1123**
	National	DM74LS54	
	Panasonic	DN74LS54	
	SGS	T74LS54	
	Signetics	**74LS54**	**1156**
	TI	SN74LS54	
74LS540	**Motorola**	**SN74LS540**	**1125**
	Signetics	**74LS540**	**1159**
	TI	SN74LS540	
74LS541	**Motorola**	**SN74LS541**	**1125**
	Signetics	**74LS541**	**1159**
	TI	SN74LS541	
74LS55	Hitachi	HD74LS55	
	Motorola	**SN74LS55**	**1123**
	National	DM74LS55	
	Panasonic	DN74LS55	
	SGS	T74LS55	
	TI	SN74LS55	
74LS670	**Motorola**	**SN74LS670**	**1128**
	National	DM74LS670	
	SGS	T74LS670	
	Signetics	74LS670	
	TI	SN74LS670	
74LS74	Hitachi	HD74LS74	
		HD74LS74A	
	Motorola	**SN74LS74A**	**1126**
	National	DM74LS74	
	Panasonic	DN74LS74A	
	SGS	T74LS74	
	Signetics	74LS74	
	TI	SN74LS74A	
74LS83A	Hitachi	HD74LS183A	
		HD74LS83A	
	Motorola	**SN74LS83A**	**1132**
	National	DM74LS83A	
	Panasonic	DN74LS83A	
	SGS	T74LS83	
	Signetics	74LS83	
		74LS83A	**1156**
	TI	SN74LS83A	
74LS85	Hitachi	HD74LS85	
	Motorola	**SN74LS85**	**1131**
	National	DM74LS85	
	Panasonic	DN74LS85	
	Signetics	**74LS85**	**1156**
	TI	SN74LS85	
74LS86	Hitachi	HD74LS86	
	Motorola	**SN74LS86**	**1123**
	National	DM74LS86	
	Panasonic	DN74LS86	
	SGS	T74LS86	
	Signetics	**74LS86**	**1156**
	TI	SN74LS86A	
74LS90	**Motorola**	**SN74LS90**	**1127**
	National	DM74LS90	
	Panasonic	DN74LS90	
	SGS	T74LS90	
	Signetics	**74LS90**	**1156**
	TI	SN74LS90	
74LS92	Hitachi	HD74LS92	
	Motorola	**SN74LS92**	**1127**
	National	DM74LS92	
	Panasonic	DN74LS92	
	SGS	T74LS92	
	Signetics	**74LS92**	**1156**
	TI	SN74LS92	
74LS93	Hitachi	HD74LS93	
	Motorola	**SN74LS93**	**1127**
	National	DM74LS93	
	Panasonic	DN74LS93	
	SGS	T74LS93	

(Continued)

Manufacturer Device	Replacement Source	Device	IC Master Page
74LS93	**Signetics**	**74LS93**	**1156**
	TI	SN74LS93	
74LS95B	Hitachi	HD74LS95B	
	Motorola	**SN74LS95B**	**1128**
	National	DM74LS95B	
	Panasonic	DN74LS95B	
	SGS	T74LS95	
		T74LS95B	
	Signetics	**74LS95B**	**1156**
	TI	SN74LS95B	
74S00	National	DM74S00	
	Signetics	**74S00**	**1156**
	TI	SN74S00	
74S02	National	DM74S02	
	Signetics	**74S02**	**1156**
	TI	SN74S02	
		SN74S32	
74S03	National	DM74S03	
	Signetics	**74S03**	**1156**
	TI	SN74S03	
74S04	National	DM74S04	
	Signetics	**74S04**	**1156**
	TI	SN74S04	
74S05	National	DM74S05	
	Signetics	**74S05**	**1156**
	TI	SN74S05	
74S08	**Signetics**	**74S08**	**1156**
	TI	SN74S08	
74S10	National	DM74S10	
	Signetics	**74S10**	**1156**
	TI	SN74S10	
74S11	National	DM74S11	
	Signetics	**74S11**	**1156**
	TI	SN74S11	
74S112	Motorola	SN74S112	
	National	DM74S112	
	Signetics	**74S112**	**1156**
	TI	SN74S112	
74S113	National	DM74S113	
	Signetics	**74S113**	**1156**
	TI	SN74S113	
74S132	TI	SN74S132	
74S133	National	DM74S133	
	Signetics	**74S133**	**1157**
	TI	SN74S133	
74S135	National	DM74S135	
	Signetics	**74S135**	**1157**
	TI	SN74S135	
74S138	AMD	SN74S138	
	National	DM74S138	
	Signetics	**74S138**	**1157**
	TI	SN74S138	
74S140	National	DM74S140	
	Signetics	**74S140**	**1157**
	TI	SN74S140	
74S15	National	DM74S15	
	TI	SN74S15	
74S182	MMI	SN74S182	
	National	DM74S182	
	Signetics	**74S182**	**1157**
	TI	SN74S182	
74S189	AMD	AM27LS03	
		AM27S03	
		SN74S189	
	Cypress	CY27S03	
		CY74S189	
		CY7C189	
		CY7CS189	
	Fairchild	93405	
	National	DM74S189	
		DM7599	
		DM8599	
	TI	SN74S189B	
74S20	National	DM74S20	
	Signetics	**74S20**	**1156**
	TI	SN74S20	
74S22	National	DM74S22	
	TI	SN74S22	
74S30	National	DM74S30	
	TI	SN74S30	
74S32	**Signetics**	**74S32**	**1156**
74S40	National	DM74S40	
	Signetics	**74S40**	**1156**
	TI	SN74S40	
74S51	National	DM74S51	
	Signetics	**74S51**	**1156**
	TI	SN74S51	
74S65	National	DM74S65	
	TI	SN74S65	
74S74	Hitachi	HD74S74	
	National	DM74S74	

(Continued)

Manufacturer Device	Replacement Source	Device	IC Master Page
74S74	**Signetics**	**74S74**	**1156**
	TI	SN74S74	
74S86	National	DM74S86	
	Signetics	**74S86**	**1156**
	TI	SN74S86	
75107	**Motorola**	**MC75107**	**3211**
	National	DS75107	
		LM75107A	
	TI	SN75107B	
75108	**Motorola**	**MC75108**	**3211**
	National	DS75108	
		LM75108A	
	TI	SN75108B	
75110	Motorola	MC75110	
	National	LM75110	
	TI	SN75110A	
75150	National	DS75150	
	TI	SN75150	
75154	National	DS75154	
	TI	SN75154	
7520	Motorola	MC7520	
	TI	SN7520	
7521	Motorola	MC7521	
	National	LM7521	
	TI	SN7521	
◆75234	Fairchild	75S234	
	TI	SN75234	
7525	Motorola	MC7525	
	National	LM7525	
7529	Motorola	MC7529	
	National	LM7529	
	Raytheon	RC7529	
7538	Motorola	MC7538	
	National	LM7538	
7539	Motorola	MC7539	
	National	LM7539	
75430	TI	SN75430	
75450	National	DS75450	
	SiliconG	SG75450	
75451	National	DS75451	
	SiliconG	SG75451	
75452	National	DS75452	
	SiliconG	SG75452	
	TI	SN75452B	
75453	Motorola	MC75453	
	National	DS75453	
		LM75453	
	SiliconG	SG75453	
	TI	SN75453B	
75461	Motorola	MC75401	
	National	DS75461	
	SiliconG	SG75461	
	TI	SN75461	
75462	Motorola	MC75402	
	National	DS75462	
	SiliconG	SG75462	
	TI	SN75462	
75S234	TI	SN75234	
75S24	Motorola	MC7524	
	National	DS75S24	
	Signetics	7524	
	TI	SN75224	
		SN7524	
9001	Fairchild	74H105	
9004	Fairchild	7420	
	National	DM7420	
		DM9004C	
	Signetics	**7420**	**1156**
	TI	SN7420	
	Toshiba	TC7420	
9016	**Fairchild**	**5404**	**609,616,622,623**
	National	DM5404	
		DM9016C	
	TI	**SN5404**	**712**
9031	Fairchild	9301	
	National	DM8301	
		DM9301	
	Raytheon	RC8252	
	Signetics	S8252	
9093	Motorola	MC853	
		MC953	
	National	DM9093	
	Raytheon	RM993	
9094	Motorola	MC856	
		MC956	
	National	DM9094	
	Raytheon	RM9094	
		RM994	
9097	Motorola	MC855	
		MC955	

(Continued)

◆ Discontinued

The manufacturers report their devices can be used as direct replacements.
Performance details often differ, so compare the specifications considering your requirements.

Fairchild (Cont'd)

Manufacturer Device	Replacement Source	Device	IC Master Page
9097	National	DM9097	
	Raytheon	RM997	
9099	Motorola	MC952	
	Raytheon	RM952	
		RM999	
9135	Fairchild	9935	
	Motorola	MC835	
		MC935	
	National	DM935	
9157	Motorola	MC857	
		MC957	
	National	DM9567	
		DM957	
	Raytheon	RM957	
9158	Motorola	MC858	
		MC958	
	National	DM958	
	Raytheon	RM958	
930	Fairchild	9930	
	Motorola	MC830	
		MC930	
	National	DM930	
	Raytheon	RM930	
9300	National	DM54195	
	TI	**SN54195**	712
9301	Fairchild	9031	
	National	DM8301	
		DM9301	
	Raytheon	RC8252	
	Signetics	S8252	
9308	Raytheon	RC9308	
	TI	SN74116	
9309	National	DM8309	
		DM9309	
9311	National	DM7213	
		DM74154	
		DM8311	
	Raytheon	RC9311	
	Signetics	**74154**	1157
	TI	SN74154	
9312	National	DM8312	
	Raytheon	RC8230	
		RC9312	
93141	Fairchild	74141	
	Hitachi	HD7441	
	National	DM74141	
		DM7441	
	Signetics	74141	
		7441	
	TI	SN74141	
9316	Raytheon	RC9316	
932	Fairchild	9932	
	Motorola	MC932	
	National	DM932	
	Raytheon	RM932	
9322	National	DM8322	
	Raytheon	RC9322	
932451	AMD	AM27S181M	
	Cypress	CY7C282M	
	Fairchild	93451	
	Fujitsu	MB7132	
	Harris	7681	
	Hitachi	HN25089	
	MMI	5381-1	
		6381	4102
		6381-1	
	Motorola	**MCM7681**	4124
	National	DM77S181	
		DM77S281	
		DM87S281	
	Raytheon	29631AM	
		29632	
	Signetics	82S181	
		NS82HS195	
		S82HS181	
		S82S181	
	TI	28S86	
		TBP28S86AM	
932511	AMD	27S191	
		AM27S191	
	Fujitsu	MB7138	
	Harris	76161	
		HM76161	
	Hitachi	HN25169	
	MMI	**63S1681**	4101,4103
	Motorola	MCM76101	
	National	77S191	
		87S191	
		DM87S191	
		(Continued)	
932511	**Raytheon**	**29681**	4134
	Signetics	82S191	
		N82S191	4167
	TI	28S166	
		TBP28S166	
932511M	EXEL	XL46C16	
	Fujitsu	MB7138E	
	Harris	HM6616	
		HM76161	
	Hitachi	HN25169S	
	MMI	**53S1681**	4101
	Motorola	**MCM76161**	4124
	National	DM77S191	
		DM77S191A	
		DM77S291	
		DM77S291A	
	Raytheon	**29681**	4134
		29681A	4134
		29683	4134
		29683A	4134
	ThomsonCSF	SFC71191A	
9334	National	DM8334	
	TI	SN74259	
93405	AMD	AM27LS03	
		AM27S03	
		SN74S189	
	Cypress	CY27S03	
		CY74S189	
		CY7C189	
		CY7CS189	
	Fairchild	74S189	
	National	DM74S189	
		DM7599	
		DM8599	
	TI	SN74S189B	
◆93412	AMD	AM93412	
◆93417	AMD	AM27S20	
	Fujitsu	MB7113	
	MMI	6300-1	
		63S140	4101,4102
	National	DM74S387	
	Signetics	**N82S126**	4166
	TI	TBP24SA10	
93419	Signetics	S82S09	
93422	AMD	AM93422	
	Cypress	CY7C122	
	Motorola	MCM93422	
◆93436	AMD	AM27S12	
	Fujitsu	MB7115	
	MMI	6305-1	
		63S240	4101,4102
	National	DM74S570	
	Signetics	**N82S130**	4166
◆93438	AMD	AM27S30	
	MMI	6340-1	
	National	DM74S475	
		DM77S475	
		DM87S475	
	Signetics	N82S140	
	TI	TBP28SA46	
◆93448	AMD	AM27S31	
	MMI	6341-1	
	Motorola	**MCM7641**	4124
	National	DM74S474	
	Signetics	N82S141	
	TI	TBP28S46	
◆93450	AMD	AM27S180	
	Fujitsu	MB7131	
	MMI	6380-1	
	National	DM87S180	
		DM87S229	
	Signetics	N82S180	
	TI	TBP28SA86A	
93451	AMD	AM27S181M	
	Cypress	CY7C282M	
	Fairchild	932451	
	Fujitsu	MB7132	
	Harris	7681	
	Hitachi	HN25089	
	MMI	5381-1	
		6381	4102
		6381-1	
	Motorola	**MCM7681**	4124
	National	DM77S181	
		DM77S281	
		DM87S281	
	Raytheon	29631AM	
		29632	
	Signetics	82S181	
		NS82HS195	
		S82HS181	
		S82S181	
		(Continued)	
93451	TI	28S86	
		TBP28S86AM	
◆93451M	AMD	AM27S181M	
	Cypress	CY7C282M	
	Fairchild	932451	
		93451	
	Fujitsu	MB7132	
	Harris	7681	
	Hitachi	HN25089	
	MMI	5381-1	
		6381	4102
		6381-1	
	Motorola	**MCM7681**	4124
	National	DM77S181	
		DM77S281	
		DM87S281	
	Raytheon	29631AM	
		29632	
	Signetics	82S181	
		NS82HS195	
		S82HS181	
		S82S181	
	TI	28S86	
		TBP28S86AM	
93452	AMD	AM27S32	
	Fujitsu	MB7121	
	Hitachi	HN25044	
	MMI	5352-1	
		6352	4102
	National	DM54S572	
	Signetics	S82S136	
	TI	TBP24SA41M	
93453	AMD	AM27S33	
	Fujitsu	MB7122	
	Hitachi	HN25045	
	MMI	5353-1	
		535441	
		6353-1	
		63S441	4101,4102
		G35441	
	Motorola	**MCM7643**	4124
	National	DM74S573	
	NEC	UPB426	
	Signetics	N72HS137	
		N825137	
		N82S137	4166
		S82S195	
	TI	TBP24S41	
◆93453C	AMD	AM27S33	
	Fairchild	93453	
	Fujitsu	MB7122	
	Hitachi	HN25045	
	MMI	5353-1	
		535441	
		6353-1	
		63S441	4101,4102
		G35441	
	Motorola	**MCM7643**	4124
	National	DM74S573	
	NEC	UPB426	
	Signetics	N72HS137	
		N825137	
		N82S137	4166
		S82S195	
	TI	TBP24S41	
◆93453M	AMD	AM27S33M	
	MMI	**53S441**	4101
	Motorola	MCM7643M	
	National	DM54S573	
		DM54S573A	
	Signetics	S82HS137	
		S82S137	
		S82S195	
	TI	TBP24S41M	
◆93458	Signetics	N82S101	
		S82S101	
93459	Signetics	N82S100	
		S82S100	
◆93475	AMD	AM2148	
		AM2149	
	Cypress	CY2148	
		CY2149	
		CY7C148	
		CY7C149	
	Intel	2148H	
		2149H	
	National	NMC2148	
	NEC	UPD2149	
	ThomsonCSF	ET2148	
	UMC	UM2148	
		UM2149	
93479	**Signetics**	**N82S212**	4166
		S82S212	
93513	Motorola	MCM76165	
93564	Fujitsu	MB7143	
93565	AMD	27S49	
		AM27S49	
	Cypress	CY7C264	
	Fairchild	32Z565	
	Fujitsu	7144H	
		MB7144	
	Harris	76641	
	Raytheon	**29VP864**	4137
	Signetics	82641	
936	Fairchild	9936	
	Motorola	MC936	
	National	DM936	
937	Fairchild	9937	
	Motorola	MC837	
		MC937	
	National	DM937	
9374	Signetics	N8T74	
937510	AMD	AM27S190	
	Fujitsu	MB7137	
	Hitachi	HN25168	
	National	DM77S190	
		DM87S190	
	Signetics	S82S190	
	TI	TBP28SA166	
944	Fairchild	9944	
	Motorola	MC944	
	National	DM944	
945	Fairchild	9945	
	Motorola	MC945	
	National	DM945	
946	Fairchild	9946	
	Motorola	MC946	
	National	DM946	
948	Fairchild	9948	
	Motorola	MC948	
	National	DM948	
949	Motorola	MC949	
	National	DM949	
	Raytheon	RM949	
◆95H90	Plessey	SP8640	
		SP8647	
9601	Fairchild	74122	
	National	DM8601	
		DM9601	
	Raytheon	RF8601	
		RF9601	
	Signetics	**N8T22**	1175
		S8T22	
	TI	SN74122	
9602	National	DM8602	
		DM9602	
	Raytheon	RF8602	
		RF9602	
96114	**TI**	**SN55114**	721
		SN75114	
96115	**TI**	**SN55115**	721
		SN75115	
96176	Fairchild	74176	
	National	DM74176	
		DM8280	
	Raytheon	RC8280	
	Signetics	74176	
	TI	SN74176	
962	Fairchild	9962	
	Motorola	MC962	
	National	DM962	
◆9644	TI	9644	
97L412	AMD	AM93L412	
9930	**Fairchild**	**930**	609,618,622,623
	Motorola	MC830	
		MC930	
	National	DM930	
	Raytheon	RM930	
9932	**Fairchild**	**932**	618
	Motorola	MC932	
	National	DM932	
	Raytheon	RM932	
9933	Motorola	MC933	
	National	DM933	
9935	Fairchild	9135	
	Motorola	MC835	
		MC935	
	National	DM935	
9936	**Fairchild**	**936**	609,618,622,623
	Motorola	MC936	
	National	DM936	

◆ Discontinued

Bold face device numbers indicate manufacturers data is provided in the IC Master on the pages noted.

Fairchild (Cont'd)

Manufacturer Device	Replacement Source	Device	IC Master Page
9937	**Fairchild**	**937**	**618**
	Motorola	MC837	
		MC937	
	National	DM937	
9941	Motorola	MC941	
	Raytheon	RM941	
9944	**Fairchild**	**944**	**618**
	Motorola	MC944	
	National	DM944	
9945	**Fairchild**	**945**	**618**
	Motorola	MC945	
	National	DM945	
9946	**Fairchild**	**946**	**609,618,622,623**
	Motorola	MC946	
	National	DM946	
9948	**Fairchild**	**948**	**618**
	Motorola	MC948	
	National	DM948	
9950	Motorola	MC950	
9951	Motorola	MC851	
		MC852	
		MC951	
	Raytheon	RM951	
9961	Motorola	MC961	
	National	DM961	
9962	**Fairchild**	**962**	**609,618,622,623**
	Motorola	MC962	
	National	DM962	
9963	Motorola	MC963	
	National	DM963	
	Raytheon	RM963	
DAC-08	AMD	AM1408	
		DAC-08	
		SSS1408	
	AD	AD1408	
		ADDAC-08	
	Datel	DAC-08B	
		DAC-I8BC	
		DAC-IC8B	
		DAC-IC8BC	**3162**
	Fairchild	MA0802M	
		μA0801	
		μA0802	
	Hitachi	HA17408	
	Motorola	**DAC-08**	**3630**
		MC1408	
	National	DAC0801	
		DAC0802	
		DAC0806	
		DAC0807	
		DAC0808	
	NEC	μPC624	
	PMI	**DAC-08**	**3637,3639**
		DAC-1408	
	Raytheon	**DAC-08**	**3664**
	Signetics	MC1408	
F100101	Hitachi	HD100101	
F100102	Hitachi	HD100102	
F100107	Hitachi	HD100107	
F100112	Hitachi	HD100112	
	Signetics	**100112**	**1173,1174**
F100113	**Signetics**	**100113**	**1173,1174**
F100114	Hitachi	HD100114	
F100117	Hitachi	HD100117	
F100118	Hitachi	HD100118	
F100122	Hitachi	HD100122	
F100123	Hitachi	HD100123	
	Signetics	**100123**	**1173,1174**
F100125	Hitachi	HD100125	
F100126	**Signetics**	**100126**	**1173,1174**
F100130	Hitachi	HD100130	
F100131	Hitachi	HD100131	
	Signetics	**100131**	**1173,1174**
F100136	Hitachi	HD100136	
	Signetics	**100136**	**1173,1174**
F100141	Hitachi	HD100141	
	Signetics	**100141**	**1173,1174**
F100142	Hitachi	HD100142	
F100145	Hitachi	HD100145	
	Signetics	**100145**	**1173,1174**
F100150	Hitachi	HD100150	
	Signetics	**100150**	**1173,1174**
F100151	Hitachi	HD100151	
	Signetics	**100151**	**1173,1174**
F100155	Hitachi	HD100155	
F100156	Hitachi	HD100156	
F100158	Hitachi	HD100158	
F100160	Hitachi	HD100160	
F100163	Hitachi	HD100163	
F100164	Hitachi	HD100164	
	Signetics	**100164**	**1173,1174**
F100165	Cypress	PAL20L8	
	Hitachi	HD100165	
	MMI	PAL20L8	
	Signetics	**100165**	**1173,1174**
F100166	Cypress	PAL20R8	
	Hitachi	HD100166	
	MMI	PAL20R8	
F100170	Cypress	PAL20R6	
	Hitachi	HD100170	
	MMI	PAL20R6	
	Signetics	**100170**	**1173,1174**
F100171	Hitachi	HD100171	
	Signetics	**100171**	**1173,1174**
F100179	Cypress	PAL20R4	
	MMI	PAL20R4	
F100180	Cypress	CY7C510	
	Hitachi	HD100179	
		HD100180	
	Signetics	**100180**	**1173,1174**
	TRW-LSI	TMC2010	
F100181	Cypress	CY7C164	
	Hitachi	HD100181	
	IDT	IDT7188	
	Signetics	**100181**	**1173,1174**
F100182	Cypress	CY7C166	
	Hitachi	HD100182	
	IDT	IDT7198	
F100183	Cypress	CY7C161	
	Hitachi	HD100183	
	IDT	IDT71981	
F100415	Cypress	CY7C162	
	Hitachi	HM100415	
	IDT	IDT71982	
F100422	Fujitsu	MB8118	
		MBM100422	
		MBM100422A	
	Hitachi	HM100422	
		HM4816	
	Intel	2118	
	Mostek	MK4516	
	Motorola	MCM4517	
	National	DM100422	
		NMC5295	
	NEC	UPB100422	
	Signetics	100422	
		GBX100422	
◆F100470	AMD	AM100470	
	Fujitsu	MBM100470A	
	NEC	UPB100470	
	Signetics	100470	
		GBX100470	
F100474	AMD	AM100474	
	Fujitsu	MBM100474	
		MBM100474A	
	Hitachi	100474	
		HM100474	
	NEC	UPB100474	
	Signetics	100474	
F100480	AMD	AM100480	
	Fujitsu	MBM100480	
	Hitachi	HM100480	
	NEC	UPB100480	
F100484	AMD	AM100484	
	Fujitsu	MBM100484	
	Hitachi	HM100484	
F10100	**Motorola**	**MC10100**	**1123**
	Signetics	**10100**	**1173,1174**
F10101	Hitachi	HD10101	
	Motorola	**MC10101**	**1123**
	Signetics	**10101**	**1173,1174**
F10102	Hitachi	HD10102	
	Motorola	**MC10102**	**1122**
	Signetics	**10102**	**1173,1174**
F10103	**Motorola**	**MC10103**	**1122**
	Signetics	**10103**	**1173,1174**
F10104	Hitachi	HD10104	
	Motorola	**MC10104**	**1122**
	Signetics	**10104**	**1173,1174**
F10105	Hitachi	HD10105	
	Motorola	**MC10105**	**1123**
	Signetics	**10105**	**1173,1174**
F10106	Hitachi	HD10106	
	Motorola	**MC10106**	**1123**
	Signetics	**10106**	**1173,1174**
F10107	Hitachi	HD10107	
	Motorola	**MC10107**	**1123**
	Signetics	**10107**	**1173,1174**
F10109	Hitachi	HD10109	
	Motorola	**MC10109**	**1123**
	Signetics	**10109**	**1173,1174**
F10110	Hitachi	HD10110	
	Motorola	**MC10110**	**1122**
	Signetics	**10110**	**1173,1174**
F10111	Hitachi	HD10111	
	Motorola	**MC10111**	**1123**
	Signetics	**10111**	**1173,1174**
F10113	**Motorola**	**MC10113**	**1123**
	Signetics	**10113**	**1173,1174**
F10114	**Motorola**	**MC10114**	**1131**
	Signetics	**10114**	**1173,1174**
F10115	**Motorola**	**MC10115**	**1131**
	Signetics	**10115**	**1173,1174**
F10116	Hitachi	HD10116	
	Motorola	**MC10116**	**1131**
	National	DM10116	
	Signetics	**10116**	**1173,1174**
F10117	Hitachi	HD10117	
	Motorola	**MC10117**	**1123**
	Signetics	**10117**	**1173,1174**
F10118	Hitachi	HD10118	
	Motorola	**MC10118**	**1123**
	Signetics	**10118**	**1173,1174**
F10119	Hitachi	HD10119	
	Motorola	**MC10119**	**1123**
	Signetics	**10119**	**1173,1174**
F10121	Hitachi	HD10121	
	Motorola	**MC10121**	**1123**
	Signetics	**10121**	**1173,1174**
F10123	**Motorola**	**MC10123**	**1125**
	Signetics	**10123**	**1173,1174**
F10124	Hitachi	HD10124	
	Motorola	**MC10124**	**1124**
	Signetics	**10124**	**1173,1174**
F10125	Hitachi	HD10125	
	Motorola	**MC10125**	**1124**
	Signetics	**10125**	**1173,1174**
F10130	Hitachi	HD10130	
	Motorola	**MC10130**	**1126**
	Signetics	**10130**	**1173,1174**
F10131	Hitachi	HD10131	
	Motorola	**MC10131**	**1126**
	Signetics	**10131**	**1173,1174**
F10132	Hitachi	HD10132	
	Motorola	**MC10132**	**1129**
	Signetics	**10132**	**1173,1174**
F10133	Hitachi	HD10133	
	Motorola	**MC10133**	**1126**
	Signetics	**10133**	**1173,1174**
F10134	Hitachi	HD10134	
	Motorola	**MC10134**	**1130**
	Signetics	**10134**	**1173,1174**
F10135	**Motorola**	**MC10135**	**1126**
	Signetics	**10135**	**1173,1174**
F10136	Hitachi	HD10136	
	Motorola	**MC10136**	**1127**
	Signetics	**10136**	**1173,1174**
F10137	**Motorola**	**MC10137**	**1127**
	Signetics	**10137**	**1173,1174**
F10141	**Motorola**	**MC10141**	**1128**
	Signetics	**10141**	**1173,1174**
F10144	**Motorola**	**MCM10144**	**4123**
	Signetics	10144	
	TI	SN10144	
F10145A	**Motorola**	**MCM10145**	**4123**
	Signetics	10145	
F10158	**Motorola**	**MC10158**	**1129**
	Signetics	**10158**	**1173,1174**
F10159	**Motorola**	**MC10159**	**1129**
	Signetics	**10159**	**1173,1174**
F10160	Hitachi	HD10160	
	Motorola	**MC10160**	**1132**
	Signetics	**10160**	**1173,1174**
F10161	Hitachi	HD10161	
	Motorola	**MC10161**	**1130**
	Signetics	**10161**	**1173,1174**
F10162	Hitachi	HD10162	
	Motorola	**MC10162**	**1130**
	Signetics	**10162**	**1173,1174**
F10164	Hitachi	HD10164	
	Motorola	**MC10164**	**1129**
	Signetics	**10164**	**1173,1174**
	TI	SN10164	
F10165	Hitachi	HD10165	
	Motorola	**MC10165**	**1131**
	Signetics	**10165**	**1173,1174**
F10168	**Motorola**	**MC10168**	**1126**
F10171	**Motorola**	**MC10171**	**1130**
	Signetics	**10171**	**1173,1174**
F10172	**Motorola**	**MC10172**	**1130**
	Signetics	**10172**	**1173,1174**
F10173	**Motorola**	**MC10173**	**1129**
	Signetics	**10173**	**1173,1174**
F10174	Hitachi	HD10174	
	Motorola	**MC10174**	**1129**
	Signetics	**10174**	**1173,1174**
	TI	SN10174	
F10175	Hitachi	HD10175	
	Motorola	**MC10175**	**1126**
	Signetics	**10175**	**1173,1174**
F10176	**Motorola**	**MC10176**	**1126**
	Signetics	**10176**	**1173,1174**
F10177	**Motorola**	**MC10177**	**1124**
F10178	**Motorola**	**MC10178**	**1127**
	Signetics	10178	
F10179	Hitachi	HD10179	
	Motorola	**MC10179**	**1132**
	Signetics	**10179**	**1173,1174**
F10180	Hitachi	HD10180	
	Motorola	**MC10180**	**1132**
	Signetics	**10180**	**1173,1174**
F10181	Hitachi	HD10181	
	Motorola	**MC10181**	**1132**
	Signetics	**10181**	**1173,1174**
F10186	**Motorola**	**MC10186**	**1126**
	Signetics	10186	
F10192	Motorola	MC10192	
	Signetics	**10192**	**1173,1174**
F10210	**Motorola**	**MC10210**	**1122**
	Signetics	**10210**	**1173,1174**
F10211	**Motorola**	**MC10211**	**1123**
	Signetics	**10211**	**1173,1174**
F10212	**Motorola**	**MC10212**	**1123**
	Signetics	10212	
F10216	**Motorola**	**MC10216**	**1131**
	Signetics	**10216**	**1173,1174**
F10231	**Motorola**	**MC10231**	**1127**
	Signetics	**10231**	**1173,1174**
F10402	**Motorola**	**MC10H145**	**1128,4123**
◆F10414	AMD	AM99C641	
	Fairchild	F1600	
		F1601	
	Fujitsu	MB8171	
		MB81C71	
	Hitachi	HM10414	
	Motorola	MCM6287	
F10415	AMD	AM10415	
	Fujitsu	MBM100470A	
		MBM10415	
	Hitachi	HM2110	
		HM2112	
	Motorola	**MCM10146**	**4123**
	National	DM10415	
	Siemens	GXB10415	
	Signetics	10415	
◆F10416	**Motorola**	**MCM10149**	**4124**
	Signetics	**10149**	**1173,1174,4166**
F10422	Fujitsu	MBM10422A	
	Motorola	**MCM10422**	**4123**
	National	DM10422	
	NEC	UPB10422	
	Signetics	10422	
◆F10470	AMD	AM10470	
	Fujitsu	MBM10470A	
	Hitachi	HM10470	
		HM2142	
	Motorola	MCM10470	
	National	DM10470	
	NEC	UPB10470	
	Signetics	10470	
F10474	AMD	AM10474	
	Fujitsu	MBM10474A	
	Hitachi	HM10474	
	Motorola	**MCM10474**	**4123**
	National	DM10474	
	NEC	UPB10474	
	Signetics	10474	
F10480	AMD	AM10480	
	Fujitsu	**MBM10480**	**4021**
	Hitachi	HM10480	
	NEC	UPB10480	
F10484	AMD	HM10484	
	Fujitsu	MBM10484	
	Hitachi	HM10484	
F10501	Motorola	MC10501	
F10502	Motorola	MC10502	
F10504	Motorola	MC10504	
F10514	Motorola	MC10514	
F10515	Motorola	MC10515	

◆ Discontinued

The manufacturers report their devices can be used as direct replacements.
Performance details often differ, so compare the specifications considering your requirements.

Fairchild (Cont'd)

Manufacturer Device	Replacement Source	Device	IC Master Page
F10516	Motorola	MC10516	
F10524	Motorola	MC10524	
F10525	Motorola	MC10525	
F10535	Motorola	MC10535	
F10558	Motorola	MC10558	
F10562	Motorola	MC10562	
F1600	Cypress	CY7C187	
	Hitachi	HM6287	
		HM6787	**4035**
	Inmos	IMS1600	
	IDT	IDT7187	
	Motorola	MCM6287	
	NEC	MPD4361	
	RCA	**CD74HC4515**	**1150**
	SGS	M74HC4515	
	Signetics	PC74HC4515	
	Toshiba	TC5561	
		TC5562	
◆F16008	National	NS16008	
F1601	AMD	AM99C641	
	Fairchild	F1600	
	Fujitsu	MB8171	
		MB81C71	
	Hitachi	HM10414	
	Motorola	MCM6287	
◆F16016	National	NS16016	
◆F16105	National	NS16105	
◆F16413	National	NS16413	
◆F16425	National	NS16425	
◆F16802	National	NS16802	
F2114	AMD	AM9114	
	Hitachi	HM472114	
	Intel	2114	
		2114A	
	Mitsubishi	M5L2114	
	Motorola	M5L2114	
		MCM2114	
		MCM21L14	
	National	NMC2114A	
	OKI	MSM2114	
	SSS	SCM2114A	
		SCM21C14	
	Synertek	SY2114	
	Toshiba	TMM2114A	
		TMM314A	
	UMC	UM2114	
◆F2716	Hitachi	HN462716	
	National	MM2716	
	OKI	MSM2716	
	SGS	M2716	
	ThomsonCSF	ET2716	
◆F2732	AMD	AM2732	
	Hitachi	HN462732	
	Intel	2732	
		2732A	
		M2732	
	National	MM2732	
		NMC2732	
	Rockwell	R27C32	
	SGS	M2732A	
	Toshiba	TMM324C	
F2847	AMD	AM2847	
F2901A	**Fairchild**	**29F01**	**1028**
	National	IDM2901A	
	ThomsonCSF	SFC2901	
◆F2910	Fairchild	29F10	
	Motorola	MC2910	
	ThomsonCSF	SFC2910	
◆F3528	AMD	AM9128	
		AM9218	
	Cypress	CY7C128	
	Fujitsu	MB8128	
		MB8416	
	Harris	HM6116	
		HM6516	
	IDT	IDT6116	
	Intel	2128	
	MicroPwr	MP6116	
	Mitsubishi	M58275	
		M5M116	
		M5M5116	
		M5M5117	
		M5M5118	
		MS8725	
	Motorola	MCM2016	
		MCM2016H	
		MCM2128	
		MCM6116	**4119**
		MCM61L16	**4119**
		MCM65116	
			(Continued)
◆F3528	National	MMC2116	
	NEC	μPD4016	
	OKI	MSM2128	
		MSM5128	**4732,4733**
	RCA	MWS6116A	
	SSS	883C21C16	
		BCM21C16	
		SCM21C16	
		SCM6116	
	TI	TMS4016	
	ThomsonCSF	ET2128	
	Toshiba	**TC5516A**	**4263**
		TMM2015A	
		TMM2016	
		TMM2016A	**4263**
	Samsung	KM6816	
	UMC	UM2128	
	Universal	US574HC133	
F3532	AMD	AM9232	
	CSG	MPS2332	
	GI	R03-9332	
	GouldAMI	S2333	
		S68A332	
	GTEMicro	G2332	
	Hitachi	HN46332	
	Intech	IM7332	
	Intel	2332	
	Mitsubishi	M58333	
	Motorola	**MCM68A332**	**4120**
	National	NM52132	
	NCR	NCR2332	
	NEC	UPD2332A	
	Panasonic	MN2332	
	RCA	**CDM5333**	**1673,1677**
	Rockwell	R2332	
	SGS	M2332	
	Sharp	LH2332	
	Siemens	SA88332	
		SAB8332	
	Signetics	2332	
		2632A	
	SiliconG	SG3532	
	SSS	SCM23C32	
	SMC	ROM4732	
	Supertex	23SC32	
		CM3200	
	Synertek	SY2332	
	TI	TM2332	
		TMS2332	
		TMS4732	
	Toshiba	TMM2332	
		TMM333P	
	VTI	VT2332	
F3533	Amperex	AM9233	
	CSG	MPS2333	
	GI	R03-9333	
	GouldAMI	S2333	
	NEC	UPD23328	
	RCA	**CDM5332**	**1673,1677,1678**
	Signetics	2332	
	SSS	SCM23C33	
	Supertex	23C32	
	Synertek	SY2333	
	Toshiba	TMM2332	
	Universal	UM2333	
F3568	AMD	AM9265	
	Fairchild	F3569	
		F3570	
	GI	R03-9365	
		R09864	
	GouldAMI	S2364	
		S6364	
	GTEMicro	G5364	
	Hitachi	HN61364	
	Intel	2364A	
	Mitsubishi	M5M2364	
		M5M2365	
		M5M23C64	
	Mostek	MK37000	
	Motorola	MCM68369	
		MCM68370	
	National	MM52264	
		NM52264	
	OKI	**MSM3864**	**4733**
	Panasonic	MN2364	
		MN4864	
	RCA	**CDM5365**	**1673,1677**
	Rockwell	R2364B	
			(Continued)
F3568	SSS	SCM23C65	
	Supertex	23SC64	
		23SC64/A	
		CM6400	
	Synertek	SY2365/A	
	TI	TMS2364	
		TMS4764	
	Toshiba	TMM2365	
	UMC	UM2366	
	VTI	VT2365	
F3569	AMD	AM9265	
	Fairchild	F3568	
		F3570	
	GI	R03-9365	
		R09864	
	GouldAMI	S2364	
		S6364	
	GTEMicro	G5364	
	Hitachi	HN61364	
	Intel	2364A	
	Mitsubishi	M5M2364	
		M5M2365	
		M5M23C64	
	Mostek	MK37000	
	Motorola	MCM68369	
		MCM68370	
	National	MM52264	
		NM52264	
	OKI	**MSM3864**	**4733**
	Panasonic	MN2364	
		MN4864	
	RCA	**CDM5365**	**1673,1677**
	Rockwell	R2364B	
	SSS	SCM23C65	
	Supertex	23SC64	
		23SC64/A	
		CM6400	
	Synertek	SY2365/A	
	TI	TMS2364	
		TMS4764	
	Toshiba	TMM2365	
	UMC	UM2366	
	VTI	VT2365	
F3570	AMD	AM9265	
	Fairchild	F3568	
		F3569	
	GI	R03-9365	
		R09864	
	GouldAMI	S2364	
		S6364	
	GTEMicro	G5364	
	Hitachi	HN61364	
	Intel	2364A	
	Mitsubishi	M5M2364	
		M5M2365	
		M5M23C64	
	Mostek	MK37000	
	Motorola	MCM68369	
		MCM68370	
	National	MM52264	
		NM52264	
	OKI	**MSM3864**	**4733**
	Panasonic	MN2364	
		MN4864	
	RCA	**CDM5365**	**1673,1677**
	Rockwell	R2364B	
	SSS	SCM23C65	
	Supertex	23SC64	
		23SC64/A	
		CM6400	
	Synertek	SY2365/A	
	TI	TMS2364	
		TMS4764	
	Toshiba	TMM2365	
	UMC	UM2366	
	VTI	VT2365	
F3870	Mostek	MK3870	
	SGS	M3870	
F3872	SGS	M3872	
F4001	Motorola	MC14001	
	National	CD4001	
		MM74C02	
	OKI	MSM4001	
	RCA	CD4001	
	Sanyo	LC4001B	
	SGS	HCC/HCF4001	
	Signetics	HEF4001	
	Solitron	CM4001	
	SSS	SCL4001	
	Toshiba	TC4001	
F40014	Motorola	MC14584	
	National	CD40106	
		CD4584	
		MM54C14	
		MM74C14	
	RCA	CD40106	
	SGS	HCC/HCF40106	
	Signetics	HEF40106	
	SSS	SCL4584	
F4002	Motorola	MC14002	
	National	CD4002	
	RCA	CD4002	
	SGS	HCC/HCF4002	
	Signetics	HEF4002	
	Solitron	CM4002	
	SSS	SCL4002	
	Toshiba	TC4002	
F4006	National	CD4006	
	RCA	CD4006	
	SGS	HCC/HCF4006	
	Signetics	HEF4006	
	Solitron	CM4006	
	SSS	SCL4006	
	Toshiba	TC4006	
F4006B	Motorola	MC14006B	
	National	CD4006	
	RCA	**CD4006B**	**704**
F4007	Motorola	MC14007	
	National	CD4007	
	RCA	CD4007	
	SGS	HCC/HCF4007	
	Signetics	HEF4007	
	Solitron	CM4007	
	SSS	SCL4007	
	Toshiba	TC4007	
F4008	Motorola	MC14008	
	National	CD4008	
		MM74C83	
	RCA	CD4008	
	SGS	HCC/HCF4008	
	Signetics	HEF4008	
	Solitron	CM4008	
	SSS	SCL4008	
	Toshiba	TC4008	
F40085	Motorola	MC14585	
	National	MM74C85	
	RCA	CD4585	
	SGS	HCC/HCF4585	
	Signetics	HEF4585	
	SSS	SCL4585	
	Toshiba	TC4585	
F40089	National	MM74C89	
F40097B	Motorola	MC14503	
		MC14503B	
	National	CD4503	
	RCA	CD4503	
	SGS	HCC/CFH4503	
F40098	National	MM80C98	
F4011	Motorola	MC14011	
	National	CD4011	
		MM74C00	
	OKI	MSM4011	
	RCA	CD4011	
	Sanyo	LC4011	
	SGS	HCC/HCF4011	
	Signetics	HEF4011	
	Solitron	CM4011	
	SSS	SCL4011	
	Toshiba	TC4011	
F4012	Motorola	MC14012	
	National	CD4012	
	RCA	CD4012	
	SGS	HCC/HCF4012	
	Signetics	HEF4012	
	Solitron	CM4012	
	SSS	SCL4012	
	Toshiba	TC4012	
F4013	Motorola	MC14013	
	National	CD4013	
		MM74C74	
	OKI	MSM4013	
	RCA	CD4013	
	Sanyo	LC4013	
	SGS	HCC/HCF4013	
	Signetics	HEF4013	
	Solitron	CM4013	
	SSS	SCL4013	
	Toshiba	TC4013	
F4014	Motorola	MC14014	
	National	CD4014	
	RCA	CD4014	
	SGS	HCC/HCF4014	
			(Continued)

◆ Discontinued

Bold face device numbers indicate manufacturers data is provided in the IC Master on the pages noted.

Fairchild (Cont'd)

Manufacturer Device	Replacement Source	Device	IC Master Page
F4014	Signetics	HEF4014	
	Solitron	CM4014	
	SSS	SCL4014	
	Toshiba	TC4014	
F4015	Motorola	MC14015	
	National	CD4015	
		MM74C164	
	OKI	MSM4015	
	RCA	CD4015	
	Sanyo	LC4015	
	SGS	HCC/HCF4015	
	Signetics	HEF4015	
	Solitron	CM4015	
	SSS	SCL4015	
	Toshiba	TC4015	
F4016	Fairchild	F4066	
	Motorola	MC14016	
		MC14066	
	National	CD4016	
		CD4066	
	RCA	CD4016	
		CD4066	
	Sanyo	LC4016	
		LC4066	
	SGS	HCC/HCF4016	
		HCC/HCF4066	
	Signetics	HEF4016	
		HEF4066	
	Solitron	CM4016	
		CM4066	
		HCF4016	
	SSS	SCL4016	
		SCL4066	
	Toshiba	TC4016	
		TC4066	
F40160	Motorola	MC14160	
	National	CD40160	
	RCA	CD40160	
	SSS	SCL4160	
F40161	Motorola	MC14161	
	National	CD40161	
	RCA	CD40161	
	SSS	SCL4161	
F40162	Motorola	MC14162B	
	National	CD40162	
	RCA	CD40162	
	SSS	SCL4162	
F40163	Motorola	MC14163B	
	National	CD40163	
	RCA	CD40163	
	SSS	SCL4163	
F4017	Motorola	MC14017	
	National	CD4017	
	RCA	CD4017	
	SGS	HCC/HCF4017	
	Signetics	HEF4017	
	Solitron	CM4017	
	SSS	SCL4017	
	Toshiba	TC4017	
F40174B	Motorola	MC14174B	
	National	CD40174B	
	RCA	**CD40174B**	**704,1146**
	SSS	SCL4174B	
F40175	Motorola	MC14175	
	National	CD40175	
		MM54C175	
		MM74C175	
	Signetics	HEF40175	
	Toshiba	TC40175	
F4018	Motorola	MC14018	
	National	CD4018	
	RCA	CD4018	
	SGS	HCC/HCF4018	
	Signetics	HEF4018	
	Solitron	CM4018	
	SSS	SCL4018	
	Toshiba	TC4018	
F4019	National	CD4019	
	OKI	MSM4019	
	RCA	CD4019	
	Sanyo	LC4019	
	SGS	HCC/HCF4019	
	Signetics	HEF4019	
	Solitron	CM4019	
	SSS	SCL4019	
	Toshiba	TC4019	
F40192	National	MM54C192	
		MM74C192	
F40193	National	CD40193	
		MM54C193	
		MM74C193	
	RCA	CD40193	
	SGS	HCC/HCF40193	
	Signetics	HEF40193	
	SSS	SCL4193	
	Toshiba	**TC40193**	**1363**
F40194	Motorola	MC14194	
	RCA	CD40194	
	SGS	HCC/HCF40194	
	Signetics	HEF40194	
F40195	National	CD40195	
		MM74C195	
F4019B	Motorola	MC14519B	
F4020	Motorola	MC14020	
	National	CD4020	
	RCA	CD4020	
	SGS	HCC/HCF4020	
	Signetics	HEF4020	
	Solitron	CM4020	
	SSS	SCL4020	
	Toshiba	TC4020	
F4021	Motorola	MC14021	
	National	CD4021	
	RCA	CD4021	
	SGS	HCC/HCF4021	
	Signetics	HEF4021	
	SSS	SCL4021	
	Toshiba	TC4021	
F4022	Motorola	MC14022	
	National	CD4022	
	RCA	CD4022	
	SGS	HCC/HCF4022	
	Signetics	HEF4022	
	Solitron	CM4022	
	SSS	SCL4022	
	Toshiba	TC4022	
F4023	Motorola	MC14023	
	National	CD4023	
		MM74C10	
	RCA	CD4023	
	SGS	HCC/HCF4023	
	Signetics	HEF4023	
	Solitron	CM4023	
	SSS	SCL4023	
	Toshiba	TC4023	
F4024	Motorola	MC14024	
	National	CD4024	
	RCA	CD4024	
	SGS	HCC/HCF4024	
	Signetics	HEF4024	
	Solitron	CM4024	
	SSS	SCL4024	
	Toshiba	TC4024	
F4025	Motorola	MC14025	
	National	CD4025	
	RCA	CD4025	
	SGS	HCC/HCF4025	
	Signetics	HEF4025	
	Solitron	CM4025	
	SSS	SCL4025	
	Toshiba	TC4025	
F4027	Motorola	MC14027	
	National	CD4027	
		MM74C76	
	OKI	MSM4027	
	RCA	CD4027	
	Sanyo	LC4027	
	SGS	HCC/HCF4027	
	Signetics	HEF4027	
	Solitron	CM4027	
	SSS	SCL4027	
F4028	Motorola	MC14028	
	National	CD4028	
		MM74C42	
	OKI	MSM4028	
	RCA	CD4028	
	Sanyo	LC4028	
	SGS	HCC/HCF4028	
	Signetics	HEF4028	
	Solitron	CM4028	
	SSS	SCL4028	
	Toshiba	TC4028	
F4029	Motorola	MC14029	
	National	CD40192	
		CD4029	
	RCA	CD40192	
		CD4029	
	SGS	HCC/HCF40192	
		HCC/HCF4029	
	Signetics	HEF40192	
			(Continued)
F4029	Solitron	CM4029	
	SSS	SCL4029	
		SCL4192	
	Toshiba	TC40192	
		TC4029	
F4030	National	CD4030	
	RCA	CD4030	
	SGS	HCC/HCF4030	
	Signetics	HEF4030	
	Solitron	CM4030	
	SSS	SCL4030	
	Toshiba	TC4030	
F4031	National	CD4031	
	RCA	CD4031	
	SGS	HCC/HCF4031	
	Signetics	HEF4731	
F4034	Motorola	MC14034	
	National	CD4034	
	RCA	CD4034	
	SGS	HCC/HCF4034	
	Solitron	CM4034	
	SSS	SCL4034	
	Toshiba	TC4034	
F4035	Motorola	MC14035	
	RCA	CD4035	
	SGS	HCC/HCF4035	
	Signetics	HEF4035	
	Solitron	CM4035	
	Toshiba	TC4035	
F4040	Motorola	MC14040	
	National	CD4040	
	RCA	CD4040	
	SGS	HCC/HCF4040	
	Signetics	HEF4040	
	Solitron	CM4040	
	SSS	SCL4040	
	Toshiba	TC4040	
F4041	National	CD4041	
	RCA	CD4041	
	SGS	HCC/HCF4041	
	Signetics	HEF4041	
	Solitron	CM4041	
	SSS	SCL4041	
F4042	Motorola	MC14042	
	National	CD4042	
	RCA	CD4042	
	SGS	HCC/HCF4042	
	Signetics	HEF4042	
	Solitron	CM4042	
	SSS	SCL4042	
	Toshiba	TC4042	
F4044	Motorola	MC14044	
	National	CD4044	
	RCA	CD4044	
	SGS	HCC/HCF4044	
	Signetics	HEF4044	
	Solitron	CM4044	
	Toshiba	TC4044	
F4046	Motorola	MC14046	
	National	CD4046	
	RCA	CD4046	
	SGS	HCC/HCF4046	
	Solitron	CM4046	
	SSS	SCL4046	
F4047	National	CD4047	
	RCA	CD4047	
	SGS	HCC/HCF4047	
	Signetics	HEF4047	
	Solitron	CM4047	
	SSS	SCL4047	
	Toshiba	TC4047	
F4049	Motorola	MC14049	
	National	CD4049	
	OKI	MSM4049	
	RCA	CD4049	
	Sanyo	LC4049	
	SGS	HCC/HCF4049	
	Signetics	HEF4049	
	Solitron	CM4049	
	SSS	SCL4049	
	Toshiba	TC4049	
F4050	Motorola	MC14050	
	National	CD4050	
	RCA	CD4050	
	SGS	HCC/HCF4050	
	Signetics	HEF4050	
	Solitron	CM4050	
	SSS	SCL4050	
	Toshiba	TC4050	
F4051	Motorola	MC14051	
	National	CD4051	
	RCA	CD4051	
			(Continued)
F4051	SGS	HCC/HCF4051	
	Signetics	HEF4051	
	Solitron	CM4051	
	SSS	SCL4051	
	Toshiba	TC4051	
F4052	Motorola	MC14052	
	RCA	CD4052	
	SGS	HCC/HCF4052	
	Signetics	HEF4052	
F4053	Motorola	MC14053	
	National	CD4053	
	RCA	CD4053	
	SGS	HCC/HCF4053	
	Signetics	HEF4053	
	Solitron	CM4053	
	SSS	SCL4053	
	Toshiba	**TC4053B**	**1363**
F4066	Fairchild	F4016	
	Motorola	MC14016	
		MC14066	
	National	CD4016	
		CD4066	
	RCA	CD4016	
		CD4066	
	Sanyo	LC4016	
		LC4066	
	SGS	HCC/HCF4016	
		HCC/HCF4066	
	Signetics	HEF4016	
		HEF4066	
	Solitron	CM4016	
		CM4066	
		HCF4016	
	SSS	SCL4016	
		SCL4066	
	Toshiba	TC4016	
		TC4066	
F4067	Motorola	MC14067	
	RCA	CD4067	
	SGS	HCC/HCF4067	
	Signetics	HEF4067	
F4068	Motorola	MC14068	
	RCA	CD4068	
	SGS	HCC/HCF4068	
	Signetics	HEF4068	
	Solitron	CM4068	
	SSS	SCL4068	
	Toshiba	TC4068	
F4069	Motorola	MC14069	
	National	CD4069	
		MM54C04	
		MM74C04	
	OKI	MSM4069	
	RCA	CD4069	
	Sanyo	LC4069	
	SGS	HCC/HCF4069	
	Signetics	HEF4069	
	Solitron	CM4069	
	SSS	SCL4069	
		SCL4449	
	Toshiba	TC4069	
F4070	Motorola	MC14070	
	National	CD4070	
		MM74C86	
	RCA	CD4070	
	SGS	HCC/HCF4070	
	Signetics	HEF4070	
	Solitron	CM4070	
	SSS	SCL4070	
F4071	Motorola	MC14071	
	National	CD4071	
		MM74C32	
	OKI	MSM4071	
	RCA	CD4071	
	Sanyo	LC4071	
	SGS	HCC/HCF4071	
	Signetics	HEF4071	
	Solitron	CM4071	
	SSS	SCL4071	
	Toshiba	TC4071	
F4072	Motorola	MC14072	
	National	CD4072	
	RCA	CD4072	
	SGS	HCC/HCF4072	
	Signetics	HEF4072	
	SSS	SCL4072	
	Toshiba	TC4072	
F4073	Motorola	MC14073	
	National	CD4073	
	RCA	CD4073	
	SGS	HCC/HCF4073	
	Signetics	HEF4073	
			(Continued)

◆ Discontinued

The manufacturers report their devices can be used as direct replacements.
Performance details often differ, so compare the specifications considering your requirements.

Fairchild (Cont'd)

Manufacturer Device	Replacement Source	Device	IC Master Page
F4073	Solitron	CM4073	
	SSS	SCL4073	
	Toshiba	TC4073	
F4075	Motorola	MC14075	
	National	CD4075	
	RCA	CD4075	
	SGS	HCC/HCF4075	
	Signetics	HEF4075	
	Solitron	CM4075	
	SSS	SCL4075	
	Toshiba	TC4075	
F4076	Motorola	MC14076	
	National	CD4076	
		MM54C173	
		MM74C173	
	RCA	CD4076	
	SGS	HCC/HCF4076	
	Signetics	HEF4076	
	Solitron	CM4076	
	SSS	SCL4076	
	Toshiba	TC4076	
F4077	Motorola	MC14077	
	National	CD4077	
	RCA	CD4077	
	SGS	HCC/HCF4077	
	Signetics	HEF4077	
	Solitron	CM4077	
	SSS	SCL4077	
F4078	Motorola	MC14078	
	RCA	CD4078	
	SGS	HCC/HCF4078	
	Signetics	HEF4078	
	Solitron	CM4078	
	SSS	SCL4078	
	Toshiba	TC4078	
F4081	Motorola	MC14081	
	National	CD4081	
		MM74C08	
	OKI	MSM4081	
	RCA	CD4081	
	Sanyo	LC4081	
	SGS	HCC/HCF4081	
	Signetics	HEF4081	
	Solitron	CM4081	
	SSS	SCL4081	
	Toshiba	TC4081	
F4082	Motorola	MC14082	
	National	CD4082	
	RCA	CD4082	
	SGS	HCC/HCF4082	
	Signetics	HEF4082	
	SSS	SCL4082	
	Toshiba	TC4082	
F4093B	Motorola	MC14093B	
	National	CD4093B	
	RCA	**CD4093B**	**704,1145**
	SSS	SCL4093B	
F4097	Motorola	MC14097	
	RCA	CD4097	
	SGS	HCC/HCF4097	
F4510	Motorola	MC14510	
	National	CD4510	
	RCA	CD4510	
	SGS	HCC/HCF4510	
	Signetics	HEF4510	
	Solitron	CM4510	
	SSS	SCL4510	
	Toshiba	TC4510	
F4511	Mitel	MD4511	
	MMI	4511	
	Motorola	MC14511	
	National	CD4511	
	NEC	µPD4511	
	RCA	CD4511	
	SGS	HCC/HCF4511	
	Signetics	HEF4511	
	Solitron	CM4511	
	SSS	SCL4511	
	Toshiba	TC4511	
F4512	Motorola	MC14512	
	National	CD4512	
	RCA	CD4512	
	SGS	HCC/HCF4512	
	SSS	SCL4512	
	Toshiba	TC4512	
F4514	Motorola	MC14514	
	National	CD4514	
	RCA	CD4514	
	SGS	HCC/HCF4514	
	Signetics	HEF4514	
		(Continued)	
F4514	Solitron	CM4514	
	SSS	SCL4514	
	Toshiba	TC4514	
F4515	Motorola	MC14515	
	National	CD4515	
	RCA	CD4515	
	SGS	HCC/HCF4515	
	Signetics	HEF4515	
	Solitron	CM4515	
	SSS	SCL4515	
	Toshiba	TC4515	
F4516	Motorola	MC14516	
	National	CD4516	
	RCA	CD4516	
	SGS	HCC/HCF4516	
	Signetics	HEF4516	
	Solitron	CM4516	
	SSS	SCL4516	
	Toshiba	TC4516	
F4518	Motorola	MC14518	
	National	CD4518	
	RCA	CD4518	
	SGS	HCC/HCF4518	
	Signetics	HEF4518	
	Solitron	CM4518	
	SSS	SCL4518	
	Toshiba	TC4518	
F4520	Motorola	MC14520	
	National	CD4520	
	OKI	MSM4520	
	RCA	CD4520	
	Sanyo	LC4520	
	SGS	HCC/HCF4520	
	Signetics	HEF4520	
	Solitron	CM4520	
	SSS	SCL4520	
	Toshiba	TC4520	
F4521	Motorola	MC14521	
	RCA	CD4045	
	SGS	HCC/HCF4045	
	Signetics	HEF4521	
	Solitron	CM4045	
	SSS	SCL4445	
	Toshiba	TC4521	
F4522	Motorola	MC14522B	
	National	CD4522	
	RCA	CD4522	
	SSS	SCL4522	
F4526	Motorola	MC14526	
	National	CD4526	
	Signetics	HEF4526	
	SSS	SCL4526	
	Toshiba	TC4526	
F4527	Motorola	MC14527	
	National	CD4527	
	RCA	CD4527	
	SGS	HCC/HCF4527	
	Signetics	HEF4527	
	SSS	SCL4527	
	Toshiba	TC4527	
F4528	Motorola	MC14528	
	National	CD4528	
		MM74C221	
	RCA	CD4098	
	SGS	HCC/HCF4098	
	Signetics	HEF4528	
	SSS	SCL4528	
	Toshiba	TC4528	
F4531	Motorola	MC14531	
	RCA	CD40101	
	SGS	HCC/HCF40101	
	Signetics	HEF4531	
	SSS	SCL4531	
	Toshiba	TC4531	
F4532	Motorola	MC14532	
	RCA	CD4532	
	SGS	HCC/HCF4532	
	Signetics	HEF4532	
	SSS	SCL4532	
	Toshiba	TC4532	
F4539	Motorola	MC14539	
	Signetics	HEF4539	
	Toshiba	TC4539	
F4543	Motorola	MC14543	
		MC14543B	
	National	CD4543	
	RCA	CD4543	
	Signetics	HEF4543	
	SSS	SCL4S43B	
	Toshiba	TC4543	
F4553	Motorola	MC14533	
		MC14553	
F4555	Motorola	MC14555	
	RCA	CD4555	
	SGS	HCC/HCF4555	
	Signetics	HEF4555	
	SSS	SCL4555	
	Toshiba	TC4555	
F4556	Motorola	MC14556	
	RCA	CD4556	
	SGS	HCC/HCF4556	
	Signetics	HEF4556	
	SSS	SCL4556	
	Toshiba	TC4556	
F4557	Motorola	MC14557	
	Signetics	HEF4557	
F4582	Motorola	MC14582	
	National	74C182	
	RCA	CD40182	
	SGS	HCC/HCF40182	
	SSS	SCL4582	
F4583	Motorola	MC14583	
	Toshiba	TC4583	
F4702	Harris	HD4702	
F4720	Signetics	HEF4720	
F4723	National	CD4723	
F4724	RCA	CD4724	
F4727	Signetics	HEF4724	
F64K	Fujitsu	MB8264A	
		MB8266A	
	Hitachi	HM4864	
	Inmos	IMS2600	
	MicronTech	MT4264	
	Motorola	MCM4164B	
		MCM6665B	
	National	NMC4164	
	NEC	µPD4164	
	OKI	MSM3764	
	ThomsonCSF	ET4164	
	Toshiba	TMM4164	
	Samsung	KM4164	
F6800A	Hitachi	HD6800	
		HD68A00	
		HD68B00	
	Motorola	**MC6800**	**1660**
	ThomsonCSF	EF6800	
F6802	GouldAMI	S6802	
	Hitachi	HD6802	
	Motorola	**MC6802**	**1660**
	ThomsonCSF	EF6802	
F6808	GouldAMI	S6808	
	Motorola	**MC6808**	**1660**
	ThomsonCSF	EF6808	
F6810	GouldAMI	S6810	
	Hitachi	HD6810	
		HD68A10	
	Motorola	MC6810	
		MCM6810	**1662,4119**
	ThomsonCSF	EF6810	
F681488	National	NS32488	
F6821	GouldAMI	S6821	
	Hitachi	HD6821	
		HD68A21	
		HD68B21	
	ThomsonCSF	EF6821	
F6840	GouldAMI	S6840	
	Hitachi	HD6840	
	Motorola	**MC6840**	**1663**
F6845	GouldAMI	S684SE	
	Hitachi	HD6845	
	Motorola	**MC6845**	**1661**
F68456	National	NS32456	
F6845A	Hitachi	HD6845A	
	Motorola	MC6845A	
F6846	GouldAMI	S6846	
	Hitachi	HD6846	
	ThomsonCSF	EF6846	
F6850	GouldAMI	S1602	
	Hitachi	HD6850	
	Motorola	**MC6850**	**1663**
	ThomsonCSF	EF6850	
F6852	GouldAMI	S6852	
	Hitachi	HD6852	
	Motorola	**MC6852**	**1663**
F6854	GouldAMI	S6854	
	ThomsonCSF	EF6854	
F6860	**Motorola**	**MC6860**	**1663,3633**
F6862	Motorola	MC6862	
F68B10	**Motorola**	**MCM68B10**	**4119**
F8804	Mitel	MT8804	
	Plessey	MV8804	
F93419	Fujitsu	MBM93419	
F9401	Motorola	MC8503	
	Signetics	9401	
F9403	Signetics	9403	
FQ3724	Motorola	MQ3724	
	Raytheon	SP3724	
FQ3725	Motorola	MQ3725	
	National	DH3725	
	Raytheon	SP3725	
LF156A	AMD	LF156A	
	AD	AD544	
	Burr-Brown	**OPA156A**	**3149,3150**
	LinearTech	LF156A	
	National	LF156A	
	PMI	PM156A	
	TI	**TL081**	**718**
LF157A	AMD	27S29	
		LF157A	
	Harris	7649	
	MMI	5349-1	
		6349-1	
	National	545472	
		74S472	
		LF157A	
	PMI	PM157A	
	Raytheon	**29621**	**4134**
	Signetics	825147	
	◆TI	28S42	
MA0802M	AMD	AM1408	
		DAC-08	
		SSS1408	
	AD	AD1408	
		ADDAC-08	
	Datel	DAC-08B	
		DAC-I8BC	
		DAC-IC8B	
		DAC-IC8BC	**3162**
	Fairchild	DAC-08	
		µA0801	
		µA0802	
	Hitachi	HA17408	
	Motorola	**DAC-08**	**3630**
		MC1408	
	National	DAC0801	
		DAC0802	
		DAC0806	
		DAC0807	
		DAC0808	
	NEC	µPC624	
	PMI	**DAC-08**	**3637,3639**
		DAC-1408	
	Raytheon	**DAC-08**	**3664**
	Signetics	MC1408	
MB8875	Fujitsu	F6854	
MC1412	Exar	XR2002C	
		XR2202C	
	Mitsubishi	M54525	
	Motorola	**MC1412**	**3212**
		ULN2002	**3212**
	NEC	µPA2002	
	RIFA	PBD352304	
	Sanyo	LB1232	
	SGS	L202	
		ULN2002	
	Signetics	NE5602	
	SiliconG	SG2002	
	Sprague	ULN-2002	
	TI	ULN2002A	
	Toshiba	TD62002	
MC1413	Exar	XR2003C	
		XR2203C	
	Mitsubishi	M54523	
	Motorola	**MC1413**	**3212**
		ULN2003	**3212**
	NEC	µPA2003	
	RIFA	PBD352303	
	Sanyo	LB1233	
	SGS	L203	
		ULN2003	
	Signetics	NE5603	
		ULN2003	**3721**
	SiliconG	SG2003	
	Sprague	ULN-2003	
	Telefunken	TDA2003	
	TI	ULN2003A	
	Toshiba	TD62003	
		TD62103	
MC5524	Motorola	MC5524	
	National	LM5524	
	Raytheon	RM5524	
	TI	SN5524	

◆ Discontinued

Bold face device numbers indicate manufacturers data is provided in the IC Master on the pages noted.

ALTERNATE SOURCE DIRECTORY

Fairchild (Cont'd)

Manufacturer Device	Replacement Source	Device	IC Master Page
MC5525	Motorola	MC5525	
	National	LM5525	
MC5528	Motorola	MC5528	
	National	LM5528	
MC5529	Motorola	MC5529	
	National	LM5529	
MC5534	Motorola	MC5534	
	National	LM5534	
MC7905	Lambda	LMC7905	
	Motorola	MC7905	
	SGS	L7905	
	SiliconG	SG7905	
	Samsung	MC7905	
MC7908	Fairchild	μA7908	
		μA79M08	
	Lambda	LMC7908	
		LμA7908	
	Motorola	MC7908	
	SGS	L7908	
	SiliconG	SG7908	
	TI	μA7908	
		μA79M08	
	Samsung	MC7908	
SH0323	Fairchild	SH323	
		μA323	
		μA78H05	
	IPS	IP123-5	
		IP323	**3599**
	Lambda	LAS1405	
		LAS1905	
	LinearTech	LM323	
	Micropac	M78H05	
	Motorola	**LM323**	**3622**
		MC78T05C	**3622**
	SiliconG	SG323	
	ThomsonCSF	LM323	
SH123	Fairchild	UA138	
		μA123	
	IPS	**IP123**	**3599**
	LinearTech	LM123	
	Motorola	**LM123**	**3622**
		MC78T05	**3622**
	National	LM123	
	SiliconG	SG123	
SH2001	Motorola	MC943	
SH223	Fairchild	μA223	
	IPS	**IP223**	**3599**
	Lambda	LLM223	
	Motorola	**LM223**	**3622**
	National	LM223	
	SiliconG	SG223	
	ThomsonCSF	TDE0123	
SH3002	**Siliconix**	**SI3002**	**3223**
SH323	Fairchild	SH0323	
		μA323	
		μA78H05	
	IPS	IP123-5	
		IP323	**3599**
	Lambda	LAS1405	
		LAS1905	
	LinearTech	LM323	
	Micropac	M78H05	
	Motorola	**LM323**	**3622**
		MC78T05C	**3622**
	SiliconG	SG323	
	ThomsonCSF	LM323	
TBA800	Plessey	TBA800	
	SGS	TBA800	
	Telefunken	TDA800	
	ThomsonCSF	TBA800	
TBA810	SGS	TBA810	
	Telefunken	TDA810	
TDA2002A	National	LM2002	
		LM383	
TDA2003	Sprague	ULN-3703	
	ThomsonCSF	TDA2003	
UA108A	AMD	LM108A	
	AD	AD108A	
	Harris	LM108A	
	LinearTech	LM108A	
	MicroPwr	**MP108A**	**688,3607**
	Motorola	**LM108A**	**3615**
	PMI	PM108A	
UA138	Fairchild	SH123	
		μA123	
	IPS	**IP123**	**3599**
	LinearTech	LM123	
	Motorola	**LM123**	**3622**
		MC78T05	**3622**
			(Continued)
UA138	National	LM123	
	SiliconG	SG123	
UA1458HC	Harris	CM1458	
		HA5102	
	MicroPwr	MPOP14	
	Motorola	**MC1458**	**3617**
	National	LF412	
	NEC	MPC251	
	PMI	OP14	
	RCA	**CA1458**	**3672**
	SGS	MC1458	
	Signetics	**SA1458**	**3729**
	ThomsonCSF	μA1458	
	Samsung	**MC1458**	**3679**
		MC4558	**3679**
UA150	**Exar**	**XR1489A**	**3561**
	Fairchild	UA212A	
		μA1489A	
	Motorola	**MC1489A**	**3211,3212**
	National	DS1489A	
	SGS	MC1489	
	Signetics	**MC1489A**	**3720,3726**
	SiliconG	SG1489A	
	TI	MC1489A	
		SN75189A	
UA208A	AMD	LM208A	
	AD	AD208A	
	MicroPwr	**MP208A**	**3607**
	Motorola	**LM208A**	**3615**
	National	LM208A	
	PMI	PM208A	
		PM308A	
UA212A	**Exar**	**XR1489A**	**3561**
	Fairchild	UA150	
		μA1489A	
	Motorola	**MC1489A**	**3211,3212**
	National	DS1489A	
	SGS	MC1489	
	Signetics	**MC1489A**	**3720,3726**
	SiliconG	SG1489A	
	TI	MC1489A	
		SN75189A	
UA238	Exar	XR2240	
	Fairchild	μA2240	
	Intersil	ICL8240	
	TI	μA2240	
UA250	Fairchild	UA26LS31	
		UA26LS32	
		μA239	
	Motorola	**LM239**	**3631**
	National	LM239	
	PMI	CMP-04	
		PM239	
	Raytheon	LM239	
	RCA	**CA239**	**3672,3677**
	Signetics	LM239	
	TI	LM239	
	ThomsonCSF	TDE0139	
UA26LS31	Fairchild	UA250	
		UA26LS32	
		μA239	
	Motorola	**LM239**	**3631**
	National	LM239	
	PMI	CMP-04	
		PM239	
	Raytheon	LM239	
	RCA	**CA239**	**3672,3677**
	Signetics	LM239	
	TI	LM239	
	ThomsonCSF	TDE0139	
UA26LS32	Fairchild	UA250	
		UA26LS31	
		μA239	
	Motorola	**LM239**	**3631**
	National	LM239	
	PMI	CMP-04	
		PM239	
	Raytheon	LM239	
	RCA	**CA239**	**3672,3677**
	Signetics	LM239	
	TI	LM239	
	ThomsonCSF	TDE0139	
UA3045	National	LM3045	
	Plessey	SL3086	
	Sanyo	LA3045	
	Sprague	ULS-2045	
UA3046	**Motorola**	**MC3346**	**3614**
	National	LM3046	
			(Continued)
UA3046	Plessey	SL3046	
		SL3146	
	RCA	**CA3046**	**3678**
		CA3146	**3678**
	Sanyo	LA3046	
	SGS	CA3046	
		TBA331	
	SiliconG	SG3046	
		SG3146	
		SG3821	
	Sprague	ULN-2046	
	ThomsonCSF	SFC	
UA3054	**Motorola**	**CA3054**	**3614**
	National	LM3054	
	RCA	**CA3054**	**3678**
	Sprague	ULN-2054	
	ThomsonCSF	SFC2054	
UA3086	**Motorola**	**MC3386**	**3614**
	National	LM3086	
	Plessey	SL3086	
	RCA	**CA3086**	**3678**
	Sanyo	LA3086	
	SiliconG	SG3086	
		SG3886	
	Sprague	ULN-2086	
	ThomsonCSF	SFC2086	
UA308A	AMD	LM308A	
	AD	AD308A	
	Harris	LM308A	
	LinearTech	LM308A	
	MicroPwr	**MP308A**	**3607**
	Motorola	**LM308A**	**3615**
	National	LM308A	
UA338	Fairchild	μA3303	
	Motorola	**MC3303**	**3618**
	SGS	MC3303	
	Signetics	**MC3303**	**3729**
	TI	MC3303	
UA3486	Fairchild	UA3487	
		UA350	
		μA3448A	
	Motorola	**MC3448A**	**3210**
UA3487	Fairchild	UA3486	
		UA350	
		μA3448A	
	Motorola	**MC3448A**	**3210**
UA350	Fairchild	UA3486	
		UA3487	
		μA3448A	
	Motorola	**MC3448A**	**3210**
UA4136	MicroPwr	MPOP09	
	PMI	OP09	
	RCA	RC4136	
UA565	AD	AD565	
		AD565A	
	Harris	HI565A	
	MicroNet	MN565A	
	Motorola	MC3412	
	TeledyneP	TP565A	
UA714	AD	AD517	
		OP-07	
	Harris	HA-OP07	
		HA5130	
		HA5135	
	LinearTech	OP-07	
	Micra	MC0021	
	MicroPwr	MPOP07	
	NEC	UPC264	
	PMI	OP07	
	Raytheon	OP07	
	TI	OP07D	
UA771	AnalogSys	MA333	
	Motorola	**MC34001**	**3616**
	NEC	UPC4081	
	TI	TL071	
		TL081C	
UA772	AnalogSys	MA336	
	Harris	HA5082	
	Motorola	**MC34002**	**3617**
	NEC	UPC4082	
	TI	TL072	
		TL082C	
UA774	AnalogSys	MA374	
	Motorola	**MC33074**	**3618**
		MC34004	**3618**
		MC34004A	
		MC34074	**3618**
	NEC	UPC4084	
	TI	TL074	
		TL084BC	
UA7805	**Motorola**	**MC7805**	**3622**
UA96172	Fairchild	UA96173	
		UA96174	
		UA96175	
		UA96176	
		UA96177	
		UA96178	
		μA8T28	
	National	DS8T28	
UA96173	Fairchild	UA96172	
		UA96174	
		UA96175	
		UA96176	
		UA96177	
		UA96178	
		μA8T28	
	National	DS8T28	
UA96174	Fairchild	UA96172	
		UA96173	
		UA96175	
		UA96176	
		UA96177	
		UA96178	
		μA8T28	
	National	DS8T28	
UA96175	Fairchild	UA96172	
		UA96173	
		UA96174	
		UA96176	
		UA96177	
		UA96178	
		μA8T28	
	National	DS8T28	
UA96176	Fairchild	UA96172	
		UA96173	
		UA96174	
		UA96175	
		UA96177	
		UA96178	
		μA8T28	
	National	DS8T28	
UA96177	Fairchild	UA96172	
		UA96173	
		UA96174	
		UA96175	
		UA96176	
		UA96178	
		μA8T28	
	National	DS8T28	
UA96178	Fairchild	UA96172	
		UA96173	
		UA96174	
		UA96175	
		UA96176	
		UA96177	
		μA8T28	
	National	DS8T28	
UA9679	Fairchild	μA9638	
	TI	μA9638	
VGC0500	VTI	FGC0500	
VGC0900	VTI	FGC0900	
VGC1200	VTI	FGC1200	
VGC1900	VTI	FGC1900	
VGC2400	VTI	FGC2400	
VGC3200	VTI	FGC3200	
VGC4000	VTI	FGC4000	
VGC6000	VTI	FGC6000	
μA0801	AMD	AM1408	
		DAC-08	
		SSS1408	
	AD	AD1408	
		ADDAC-08	
	Datel	DAC-08B	
		DAC-I8BC	
		DAC-IC8B	
		DAC-IC8BC	**3162**
	Fairchild	DAC-08	
		MA0802M	
		μA0802	
	Hitachi	HA17408	
	Motorola	**DAC-08**	**3630**
		MC1408	
	National	DAC0801	
		DAC0802	
		DAC0806	
		DAC0807	
		DAC0808	
	NEC	μPC624	
	PMI	**DAC-08**	**3637,3639**
		DAC-1408	
	Raytheon	**DAC-08**	**3664**
	Signetics	MC1408	

◆ Discontinued

The manufacturers report their devices can be used as direct replacements.
Performance details often differ, so compare the specifications considering your requirements.

Fairchild (Cont'd)

Manufacturer Device	Replacement Source	Device	IC Master Page
µA0802	AMD	AM1408	
		DAC-08	
		SSS1408	
	AD	AD1408	
		ADDAC-08	
	Datel	DAC-08B	
		DAC-I8BC	
		DAC-IC8B	
		DAC-IC8BC	**3162**
	Fairchild	DAC-08	
		MA0802M	
		µA0801	
	Hitachi	HA17408	
	Motorola	**DAC-08**	**3630**
		MC1408	
	National	DAC0801	
		DAC0802	
		DAC0806	
		DAC0807	
		DAC0808	
	NEC	µPC624	
	PMI	**DAC-08**	**3637,3639**
		DAC-1408	
	Raytheon	**DAC-08**	**3664**
	Signetics	MC1408	
µA101	AMD	LM101	
	AD	AD101	
	Intersil	AD101	
	LinearTech	LM101	
	Motorola	LM101	
	Raytheon	LM101	
	SiliconG	SG101	
	ThomsonCSF	LM101	
µA105	AMD	LM105	
	Intersil	LM105	
	National	LM105	
	SiliconG	SG105	
	ThomsonCSF	LM105	
µA108	AD	AD108	
	Harris	LM108	
	Intersil	**LM108**	**3600,3601**
	LinearTech	LM108	
	MicroPwr	**MP108**	**688,3607**
	Motorola	**LM108**	**3615**
	National	LM108	
	PMI	PM108	
	SGS	M108	
	SiliconSys	**SSI108**	**3736**
	TI	LM108	
µA109	**IPS**	**IP140-5**	**3599**
	Motorola	LM109	
	National	LM109	
	SiliconG	SG109	
	ThomsonCSF	SFC2109	
◆µA110	AMD	LM110	
	National	LM110	
µA111	AD	AD111	
	LinearTech	LM111	
	Motorola	**LM111**	**3631**
	National	LM111	
	Raytheon	LM111	
	Signetics	**LM111**	**3725**
	SiliconG	SG111	
	TI	**LM111**	**719**
	ThomsonCSF	LM111	
µA117	**IPS**	**IP117**	**3599**
	LinearTech	LM117	
	MCE	MCE-LM117	
	Motorola	**LM117**	**3625**
	SiliconG	SG117	
	TI	LM117	
	ThomsonCSF	LM117	
		TDC0117	
	Unitrode	UC117	
µA123	Fairchild	SH123	
		UA138	
	IPS	**IP123**	**3599**
	LinearTech	LM123	
	Motorola	**LM123**	**3622**
		MC78T05	**3622**
	National	LM123	
	SiliconG	SG123	
◆µA124A	AMD	LM124A	
	LinearTech	LT1014	
	Motorola	LM124A	
	National	LM124A	
	RCA	CA124A	
	Signetics	LM124A	
	SiliconG	SG124	
	TI	LM124A	
◆µA1310	Exar	XR1310	
	National	LM1310	
	TI	SN76115	
	Toshiba	TA7157	
µA139	**Motorola**	**LM139**	**3631**
	National	LM139	
	PMI	CMP-04	
		PM139	
	Raytheon	LM139	
	RCA	**CA139**	**3672,3677**
	Signetics	LM139	
	TI	**LM139**	**719**
µA1489A	**Exar**	**XR1489A**	**3561**
	Fairchild	UA150	
		UA212A	
	Motorola	**MC1489A**	**3211,3212**
	National	DS1489A	
	SGS	MC1489	
	Signetics	**MC1489A**	**3720,3726**
	SiliconG	SG1489A	
	TI	MC1489A	
		SN75189A	
◆µA193	**Motorola**	**LM193**	**3631**
	National	LM193A	
	Signetics	**LM193**	**3725**
	TI	**LM193**	**719**
◆µA211	AD	AD211	
	Motorola	**LM211**	**3631**
	National	LM211	
	RCA	LM211	
	Signetics	**LM211**	**3725**
	SiliconG	SG211	
	TI	LM211	
	ThomsonCSF	LM211	
◆µA217	**IPS**	**IP217**	**3599**
	MCE	MCE-LM217	
	Motorola	**LM217**	**3625**
	National	LM217	
	SiliconG	SG217	
	TI	LM217	
	ThomsonCSF	TDE0117	
	Unitrode	UC217	
µA223	Fairchild	SH223	
	IPS	**IP223**	**3599**
	Lambda	LLM223	
	Motorola	**LM223**	**3622**
	National	LM223	
	SiliconG	SG223	
	ThomsonCSF	TDE0123	
µA2240	Exar	XR2240	
	Fairchild	UA238	
	Intersil	ICL8240	
	TI	µA2240	
µA239	Fairchild	UA250	
		UA26LS31	
		UA26LS32	
	Motorola	**LM239**	**3631**
	National	LM239	
	PMI	CMP-04	
		PM239	
	Raytheon	LM239	
	RCA	**CA239**	**3672,3677**
	Signetics	LM239	
	TI	LM239	
	ThomsonCSF	TDE0139	
µA2901	Cypress	CY7C901	
	Fairchild	µA3302	
	Motorola	**LM2901**	**3631**
		MC3302	**3631**
	National	LM2901	
		LM3302	
	NEC	µPC2901	
	PMI	CMP-04	
	Raytheon	LM2901	
		RC3302	
	RCA	CA3302	
	SGS	LM2901	
		MC3302	
	Signetics	**LM2901**	**3721,3722**
		MC3302	**3721**
	SiliconG	SG324A	
	TI	LM2901	
		LM3302	
	ThomsonCSF	LM2901	
µA2902	Hitachi	HA17902	
	Motorola	**LM2902**	**3618**
	National	LM2902	
	NEC	µPC2902	
	Raytheon	LM2902	
	SGS	LM2902	
			(Continued)
µA2902	TI	LM2902	
	ThomsonCSF	LM2902	
◆µA2903	AD	AD311	
	Fairchild	µA311	
	LinearTech	LM311	
	Motorola	**LM2903**	**3631**
		LM311	**3631**
	National	LM2903	
		LM311	
	NEC	µPC271	
		µPC311	
	Raytheon	LM311	
	RCA	**CA311**	**3672,3677**
		LM311	
	SGS	LM2903	
		LM311	
	Signetics	**LM2903**	**3725**
		LM311	**3721**
	SiliconG	SG311	
	TI	LM2903	
		LM311	
	ThomsonCSF	LM2903	
		LM311	
		SFC3111	
◆µA293	**Motorola**	**LM293**	**3631**
	National	LM293	
	Signetics	LM293	
	TI	LM293	
µA301A	AD	AD301	
	Intersil	AD301	
	LinearTech	LM301	
		LM301A	
	Motorola	LM301	
	National	LM301	
		LM301A	
	NEC	µPC157	
		µPC301	
	Raytheon	LM301	
	RCA	CA301	
		LM301	
	SiliconG	SG301	
	TI	LM301	
		LM301A	
	ThomsonCSF	LM301A	
	Toshiba	TA7506	
µA3054	**Harris**	**HC5554**	**3595**
	National	TP3054	
	Sierra	SC11301	
	Sprague	ULN-3054	
µA3057	**Harris**	**HC5557**	**3595**
	National	TP3057	
	Sierra	SC11302	
◆µA3065	Motorola	LM3065	
		M5140	
	National	LM3064	
	RCA	CA3065	
	Sanyo	LA1365	
	TI	SN76666	
◆µA3075	National	LM3075	
	RCA	CA3075	
	TI	SN76675	
µA308	AD	AD308	
	Burr-Brown	3500	
		3501	
	Intersil	AD308	
		LM308	**3600,3601**
	MicroPwr	**MP308**	**3607**
	Motorola	**LM308**	**3615**
	National	LM308	
	Raytheon	LM308	
µA311	AD	AD311	
	LinearTech	LM311	
	Motorola	**LM2903**	**3631**
		LM311	**3631**
	National	LM2903	
		LM311	
	NEC	µPC271	
		µPC311	
	Raytheon	LM311	
	RCA	**CA311**	**3672,3677**
		LM311	
	SGS	LM2903	
		LM311	
	Signetics	**LM2903**	**3725**
		LM311	**3721**
	SiliconG	SG311	
	TI	LM2903	
		LM311	
	ThomsonCSF	LM2903	
		LM311	
		SFC3111	
µA317	**IPS**	**IP317**	**3599**
	LinearTech	LM317	
	MCE	MCE-LM317	
	Motorola	**LM317**	**3625**
	National	LM317	
	SGS	LM317	
	SiliconG	SG317	
	TI	LM317	
	ThomsonCSF	LM317	
		TDB0117	
	Unitrode	UC317	
◆µA318	AD	AD518	
	Harris	LM318	
	LinearTech	LM318	
	National	LM318	
	NEC	µPC159	
	TI	LM318	
	ThomsonCSF	LM318	
		TDB0118	
µA323	Fairchild	SH0323	
		SH323	
		µA78H05	
	IPS	IP123-5	
		IP323	**3599**
	Lambda	LAS1405	
		LAS1905	
	LinearTech	LM323	
	Micropac	M78H05	
	Motorola	**LM323**	**3622**
		MC78T05C	**3622**
	SiliconG	SG323	
	ThomsonCSF	LM323	
µA3302	Cypress	CY7C901	
	Fairchild	µA2901	
	Motorola	**LM2901**	**3631**
		MC3302	**3631**
	National	LM2901	
		LM3302	
	NEC	µPC2901	
	PMI	CMP-04	
	Raytheon	LM2901	
		RC3302	
	RCA	CA3302	
	SGS	LM2901	
		MC3302	
	Signetics	**LM2901**	**3721,3722**
		MC3302	**3721**
	SiliconG	SG324A	
	TI	LM2901	
		LM3302	
	ThomsonCSF	LM2901	
µA3303	Fairchild	UA338	
	Motorola	**MC3303**	**3618**
	SGS	MC3303	
	Signetics	**MC3303**	**3729**
	TI	MC3303	
◆µA338	**IPS**	**IP338**	**3599**
	LinearTech	LM338	
	Micropac	MLM338	
	National	LM338	
µA339	AMD	LM339A	
	Hitachi	HA17901	
	Motorola	**LM339**	**3631**
	National	LM339	
	NEC	µPC339	
	PMI	CMP-04	
		PM339A	
	Raytheon	LM339	
	RCA	**CA339**	**3672,3677**
		CA339A	**3672,3677**
		LM339	
	SGS	LM339	
	TI	LM339	
	ThomsonCSF	LM339	
		TDB0139	
µA3448A	Fairchild	UA3486	
		UA3487	
		UA350	
	Motorola	**MC3448A**	**3210**
µA376	National	LM376	
◆µA376T	NEC	µPC305	
◆µA393	**Motorola**	**LM393**	**3631**
	Sanyo	LA6393	
	Signetics	LM393	
	TI	LM393	
◆µA4151	**Exar**	**XR4151**	**3561**
	Raytheon	**RC4151**	**3665**
		RM4151	
		RV4151	
	TI	XR4151	
µA431	Motorola	TL431	
	TI	**TL431**	**720**

◆ Discontinued

Bold face device numbers indicate manufacturers data is provided in the IC Master on the pages noted.

ALTERNATE SOURCE DIRECTORY

Fairchild (Cont'd)

Manufacturer Device	Replacement Source	Device	IC Master Page
μA4558	Exar	XR4558	
	Motorola	**MC4558**	**3617**
	National	LM1458	
	Raytheon	RC4558	
	TI	RC4558	
μA494	Cherry	CS494M	
	Exar	**XR494**	**3557**
	IPS	**IP494A**	**3599**
	Motorola	TL494	
	Sprague	ULN8194A	
		ULS-8194	
	TI	**TL494M**	**720**
		TL594M	**720**
	Unitrode	**UC494A**	**3739,3739**
μA555	Exar	XR555	
	Hitachi	HA17555	
	Intersil	NE555	
	Mitsubishi	M51841	
		M51848	
		M5251	
		M5E555	
	Motorola	MC1455	
	NEC	μPC1555	
	Raytheon	RC555	
	RCA	CA555	
	Sanyo	LB8555	
	SGS	NE555	
	Signetics	**NE555**	**3721**
		NE555N	
	TI	NE555	
	ThomsonCSF	LM555	
	Samsung	**NE555**	**3679**
μA565	Harris	HI565A	
	MicroNet	MN565A	
	Motorola	MC3412	
	National	DAC1265	
	TeledyneP	TP565A	
μA571	AD	AD571	
	MCE	MCE-571	
μA705	**Motorola**	**MC1309**	**3614**
		MC1311	
	National	LM1800	
	RCA	CA3145	
		CA3195	
	Sanyo	LA705	
		LA758	
	Signetics	**μA758**	**3727**
	Sprague	ULN-3809	
		ULN-3812	
	TI	SN76111	
		SN76116	
μA709	Hitachi	HA1303	
	Motorola	**MC1709**	**3615**
	National	LM1709	
		LM709	
	NEC	μPC255	
		μPC55	
	RCA	**CA3038**	**3672**
	TI	μA709	
	ThomsonCSF	SFC2709	
	Toshiba	TA7502	
μA714	LinearTech	OP-07	
	MicroPwr	MPOP07	
μA715	AMD	715	
◆μA720	National	LM1820	
	TI	SN76635	
μA723	Hitachi	HA17723	
	Intersil	LM723	
	Motorola	**MC1723**	**3625**
	National	LM723	
	Raytheon	RC723	
		RM723	
	RCA	CA723	
		LM723	
	SGS	L123	
		LM723	
	Signetics	**μA723**	**3721,3730**
	SiliconG	SG723	
	TI	μA723	
	ThomsonCSF	LM723	
μA725	AMD	SSS725	
	National	LM725	
	PMI	OP06	
	Raytheon	RM725	
μA7327	SGS	TDA1170	
	Sprague	ULN-2270	
	Telefunken	TDA1170	
	ThomsonCSF	TDA1170	
μA733	Hitachi	HA17733	
	Intersil	μA733	
μA733	**Motorola**	**MC1733**	**3616**
		NE592	
	National	LM733	
	Signetics	**μA733**	**3721,3729**
	TI	μA733	
μA739	Exar	XR4739	
	Fairchild	μA749	
	National	LM1303	
	Raytheon	RC4739	
	SGS	TBA231	
	TI	SN76131	
		SN76149	
◆μA740	Intersil	LM740	
μA741	**Elantec**	**EHA2600**	**3538**
	Harris	HA-2600	
	Motorola	**MC1556**	**3616**
	TeledyneP	1326	
	TI	MC1556	
μA747	AMD	747	
	Hitachi	HA17747	
	MicroPwr	MPOP04	
	Motorola	**MC1747**	**3617**
	National	LM747	
	NEC	μPC251	
	PMI	**OP-04**	**3636**
		PM747	
	Raytheon	RC747	
		RM747	
	RCA	**CA747**	**3672**
	Signetics	**μA747**	**3721**
	TeledyneS	747	
	TI	μA747	
μA749	Exar	XR4739	
	Fairchild	μA739	
	National	LM1303	
	Raytheon	RC4739	
	SGS	TBA231	
	TI	SN76131	
		SN76149	
◆μA751	Hitachi	HA17715	
◆μA753	TI	SN76678	
◆μA758	Fairchild	μA705	
	Motorola	**MC1309**	**3614**
		MC1311	
	National	LM1800	
	RCA	CA3145	
		CA3195	
	Sanyo	LA705	
		LA758	
	Signetics	**μA758**	**3727**
	Sprague	ULN-3809	
		ULN-3812	
	TI	SN76111	
		SN76116	
μA760	National	LM160	
	PMI	CMP-05	
◆μA7810	TI	μA7810	
μA7812	**IPS**	**IP140-12**	**3599**
		IP340-12	**3599**
		IP7812	**3599**
	Lambda	LMC7812	
		LμA7812	
	Motorola	**MC7812**	**3623**
	National	LM7812	
	NEC	μPC7812	
	SGS	L7812	
	SiliconG	SG340-12	
		SG7812	
	TI	μA7812	
	Toshiba	TA78012	
	Samsung	MC7812	
	Unitrode	UC7812	
μA7815	Fairchild	μA78L15	
	IPS	**IP140-15**	**3599**
		IP340-15	**3599**
		IP7815	**3599**
	Lambda	LAS1515	
		LMC7815	
		LμA7815	
	Motorola	**MC7815**	**3624**
		MC78L15	
	National	LM340-15	
		LM340LA-15	
		LM340T-15	
		LM7815	
		LM78L15	
	NEC	μPC7815	
		μPC78L15	
	SGS	L7815	
	SiliconG	SG340-15	
		SG7815	
	TI	LM340-15	
μA7815	TI	μA7815	
		μA78L15	
	ThomsonCSF	μA7815	
	Toshiba	TA78015	
	Samsung	MC7815	
	Unitrode	UC7815	
◆μA787	National	LM1829	
		LM3126	
	RCA	CA3126	
◆μA7885	TI	μA7885	
μA78H05	Fairchild	SH0323	
		SH323	
		μA323	
	IPS	IP123-5	
		IP323	**3599**
	Lambda	LAS1405	
		LAS1905	
	LinearTech	LM323	
	Micropac	M78H05	
	Motorola	**LM323**	**3622**
		MC78T05C	**3622**
	SiliconG	SG323	
	ThomsonCSF	LM323	
μA78H12A	Lambda	LAS1412	
		LAS1912	
	Micropac	M78H12	
μA78HGA	**IPS**	**IP350**	**3599**
	Lambda	LAS14U	
		LAS19U	
	LinearTech	LM350	
	Motorola	**LM350**	**3625**
	National	LM350	
	SiliconG	SG350	
	TI	LM350	
μA78L02	Motorola	MC7802	
	TI	μA78L02	
μA78L02A	TI	μA78L02A	
μA78L05	Motorola	MC78L05	
	National	LM340LA-5	
		LM78L05	
	NEC	μPC78L05	
	TI	μA78L05	
	ThomsonCSF	μA7805	
μA78L05A	TI	μA78L05A	
μA78L06	Motorola	MC78L06	
	TI	μA78L06	
		μA87L06	
μA78L06A	TI	μA78L06A	
◆μA78L08	Motorola	MC78L08	
	NEC	μPC78L08	
	TI	μA78L08	
μA78L08A	TI	μA78L08A	
◆μA78L09	TI	μA78L09	
μA78L09A	TI	μA78L09A	
◆μA78L10	TI	μA78L10	
μA78L10A	TI	μA78L10A	
μA78L12	Motorola	MC78L12	
	National	LM340LA-12	
		LM78L12	
	NEC	μPC78L12	
	TI	μA78L12	
	ThomsonCSF	SFC2812	
		μA7812	
μA78L12A	TI	μA78L12A	
μA78L15	Fairchild	μA7815	
	IPS	**IP140-15**	**3599**
		IP340-15	**3599**
		IP7815	**3599**
	Lambda	LAS1515	
		LMC7815	
		LμA7815	
	Motorola	**MC7815**	**3624**
		MC78L15	
	National	LM340-15	
		LM340LA-15	
		LM340T-15	
		LM7815	
		LM78L15	
	NEC	μPC7815	
		μPC78L15	
	SGS	L7815	
	SiliconG	SG340-15	
		SG7815	
	TI	LM340-15	
		μA7815	
		μA78L15	
	ThomsonCSF	μA7815	
	Toshiba	TA78015	
	Samsung	MC7815	
	Unitrode	UC7815	
μA78L15A	TI	μA78L15A	
◆μA78L26	Fairchild	μA78L02	
	Motorola	MC7802	
	TI	μA78L02	
μA78M05	Motorola	MC78M05	
	National	LM341-5	
		LM342-05	
		LM78M05	
	NEC	μPC78M05	
	Sanyo	L78M05	
	SGS	L78M05CV	
	TI	μA78M05	
	Samsung	MC78M05	
μA78M06	Motorola	MC78M06	
	Sanyo	L78M06	
	SGS	L78M06CV	
	TI	μA78M06	
	Samsung	MC78M06	
μA78M08	Motorola	MC78M08	
	NEC	μPC78M08	
	Sanyo	L78M08	
	SGS	L78M08CV	
	TI	μA78M08	
	Samsung	MC78M08	
μA78M10	TI	μA78M10	
μA78M12	Motorola	MC78M12	
	National	LM341-12	
		LM342-12	
		LM78M12	
	NEC	μPC78M12	
	Sanyo	L78M12	
	SGS	L78M12CV	
	Samsung	MC78M12	
μA78M15	Motorola	MC78M15	
	National	LM341-15	
		LM342-15	
		LM78M15	
	NEC	μPC78M15	
	Sanyo	L78M15	
	SGS	L78M15CV	
	Samsung	MC78M15	
◆μA78M18	Motorola	MC78M18	
	Sanyo	L78M18	
	Samsung	MC78M18	
μA78M24	Motorola	MC78M24	
	Sanyo	L78M24	
	SGS	L78M24CV	
	TI	μA78M24	
	Samsung	MC78M24	
μA78P05	Lambda	LAS3905	
	Micropac	M78P05	
		MLAS3905	
μA78S40	**Motorola**	**μA78S40**	**3626**
μA7902	Lambda	LMC7902	
	Motorola	MC7902	
	Samsung	MC7902	
μA7905	Fairchild	μA79M05	
	IPS	**IP120-5**	**3599**
		IP320-5	**3599**
		IP7905	**3599**
	Lambda	LμA7905	
	National	LM320MP5	
		LM7905	
		LM79M05	
	NEC	μPC7905	
	SiliconG	SG120-5	
		SG320-05	
		SG320P-5	
	TI	μA7905	
	Unitrode	UC7905	
◆μA7905	Lambda	LμA7905	
μA7908	Fairchild	MC7908	
		μA79M08	
	Lambda	LMC7908	
		LμA7908	
	Motorola	MC7908	
	SGS	L7908	
	SiliconG	SG7908	
	TI	μA7908	
		μA79M08	
	Samsung	MC7908	
◆μA791	ThomsonCSF	μA791	
μA7912	Fairchild	μA79M12	
	IPS	**IP320-12**	**3599**
		IP7912	**3599**
	Motorola	MC7912	
	National	LM320MP12	
		LM7912	
		LM79M12	
	NEC	μPC7912	
	SGS	L7912	
	SiliconG	SG320P-12	
		SG7912	

(Continued)

◆ Discontinued

The manufacturers report their devices can be used as direct replacements.
Performance details often differ, so compare the specifications considering your requirements.

Fairchild (Cont'd)

Manufacturer Device	Replacement Source	Device	IC Master Page
μA7912	TI	LM320-12	
		μA7912	
	ThomsonCSF	μA7912	
	Samsung	MC7912	
	Unitrode	UC7912	
μA7915	**IPS**	**IP320-15**	**3599**
		IP7915	**3599**
	Motorola	MC7915	
	National	LM320-15	
		LM320T15	
		LM7915	
	NEC	μPC7915	
	SGS	L7915	
	SiliconG	SG320-15	
		SG7915	
	TI	LM320-5	
		μA7915	
	ThomsonCSF	μA7915	
	Samsung	MC7915	
	Unitrode	UC7915	
◆μA7918	Motorola	MC7918	
	SGS	L7918	
	SiliconG	SG7918	
	TI	μA7918	
	Samsung	MC7918	
◆μA7952	TI	μA7952	
μA796	Motorola	MC1496	
	National	LM1496	
	Plessey	SL1496	
	Signetics	**MC1496**	**3722**
	SiliconG	SG1496	
μA798	**Motorola**	**MC3458**	**3617**
		MC3558	**3617**
μA79HG	Lambda	LAS18U	
μA79M05	Fairchild	μA7905	
	IPS	**IP120-5**	**3599**
		IP320-5	**3599**
		IP7905	**3599**
	Lambda	LμA7905	
	National	LM320MP5	
		LM7905	
		LM79M05	
	NEC	μPC7905	
	SiliconG	SG120-5	
		SG320-05	
		SG320P-5	
	TI	μA7905	
	Unitrode	UC7905	
μA79M06	TI	μA79M06	
μA79M08	Fairchild	MC7908	
		μA7908	
	Lambda	LMC7908	
		LμA7908	
	Motorola	MC7908	
	SGS	L7908	
	SiliconG	SG7908	
	TI	μA7908	
		μA79M08	
	Samsung	MC7908	
μA79M12	Fairchild	μA7912	
	IPS	**IP320-12**	**3599**
		IP7912	**3599**
	Motorola	MC7912	
	National	LM320MP12	
		LM7912	
		LM79M12	
	NEC	μPC7912	
	SGS	L7912	
	SiliconG	SG320P-12	
		SG7912	
	TI	LM320-12	
		μA7912	
	ThomsonCSF	μA7912	
	Samsung	MC7912	
	Unitrode	UC7912	
◆μA79M20	TI	μA79M20	
◆μA79M24	TI	μA79M24	
μA8T26A	**Motorola**	**MC8T26A**	**3210**
	National	DS8T26A	
	Signetics	**N8T26A**	**1175**
	TI	N8T26A	
μA8T28	Fairchild	UA96172	
		UA96173	
		UA96174	
		UA96175	
		UA96176	
		UA96177	
		UA96178	
	National	DS8T28	
◆μA9622	Raytheon	RM9622	
μA9636A	TI	μA9636A	
μA9637A	TI	μA9637A	
μA9638	Fairchild	UA9679	
	TI	μA9638	
μA9665	SGS	ULQ2001	
μA9666	SGS	ULQ2002	
μA9667	SGS	ULQ2003	
μA9668	SGS	ULQ2004	
μA9708	Hitachi	HD14443	
		HD14447	
	Motorola	**MC14443**	**3629**
		MC14447	**3629**
◆μAF255	MicroPwr	MP255	
	National	LF255	
	PMI	PM255	
	ThomsonCSF	TDE0155	
◆μAF256	National	LF256	
	ThomsonCSF	TDE0156	
◆μAF355	LinearTech	LF355	
	Motorola	**LF355**	**3616**
	National	LF355	
	PMI	PM355	
	ThomsonCSF	LF355	
◆μAF356	LinearTech	LF356	
	Motorola	**LF356**	**3616**
	National	LF356	
	PMI	PM356	
	ThomsonCSF	LF356	
◆μAF398	LinearTech	LF398	
	National	LF398	
		LM298	
	PMI	SMP-10	
	Signetics	**LF398**	**3725**
		NE5537	**3692,3720**
◆μAF771	PMI	OP-16	
	RCA	**CA081**	**3672,3676**
	ThomsonCSF	LF351	
		TL081	
μAF774	Exar	XR084	
	RCA	**CA084**	**3672,3676**
	SGS	TL084	
	TI	TL084	

Ferranti Interdesign

Manufacturer Device	Replacement Source	Device	IC Master Page
ULA1G000	Interdesign	1G000	
ULA1U000	Interdesign	1U000	
ULA2000	Interdesign	MUA	
ULA2C000	Interdesign	MSA	
ULA2H000	Interdesign	MUC	
ULA2L000	Interdesign	MUB	
ULA2U000	Interdesign	2U000	
ULA3U000	Interdesign	3U000	
ULA5C000	Interdesign	MSB	
ULA9C000	Interdesign	MSC	
ZN1060	**Signetics**	**NE5560**	**3713,3730**
	Sprague	ULN-8160	
ZN423	AD	AD589	
	Intersil	**ICL8069**	**3604**
	Maxim	ICL8069	
	MicroPwr	**MP5010**	**688,3607**
	National	LM113	
		LM313	
	TeledyneS	9491	
		T-SC9491	
ZN425	Datel	ADC-MC8	
ZN433	Datel	ADC-856	
ZN447E	**Datel**	**ADC-847A**	**3157,3162**
ZN447J	**Datel**	**ADC-847B**	**3157,3162**
ZN449	Datel	ADC-847	
ZN449E	Datel	ADC-847C	
ZN458	Datel	VR-182	
ZN459	AnalogSys	MA459	

Fujitsu Microelectronics, Inc.

Manufacturer Device	Replacement Source	Device	IC Master Page
7144H	AMD	27S49	
		AM27S49	
	Cypress	CY7C264	
	Fairchild	32Z565	
		93565	
	Fujitsu	MB7144	
	Harris	76641	
	Raytheon	**29VP864**	**4137**
	Signetics	82641	
80186	AMD	80186	
	Intel	80186	
	IMI	IMI6080	
	Siemens	80186	
80188	AMD	80188	
	Intel	80188	
	Siemens	80188	
8401	GouldAMI	6508	
	Harris	HM6508	
	Intersil	6508	
		IM6508-1	
	MicroPwr	6508	
	National	6508	
		74C929	
	NEC	443	
	RCA	6508	
	Toshiba	5508	
F6854	Fairchild	MB8875	
◆MB2716	Hitachi	HN462716	
	National	MM2716	
	OKI	MSM2716	
	SGS	M2716	
	ThomsonCSF	ET2716	
MB3759	Cherry	CS594	
	IPS	IP494	
	Sprague	ULN-8194	
	TI	**TL494M**	**720**
		TL594M	**720**
	Unitrode	**UC494A**	**3739,3739**
MB3760	Sprague	ULQ-8195	
	TI	TL495I	
		TL595I	
MB4111	SiliconSys	104	
MB4112	SiliconSys	105	
MB7111	AMD	AM27S18	
	Harris	HM7602	
	MMI	**6330**	**4102**
	National	DM74S188	
	Signetics	**N82S23**	**4166**
	TI	TBP18SA30	
MB7112	AMD	AM27LS19	
		AM27S19	
	MMI	5331-1	
		53S081	**4101**
		6331-1	
		63S081	**4101,4102**
	Motorola	MCM27S19	
	National	DM74S288	
		DM8578	
	Signetics	**N82S123**	**4166**
		S82S123	
	TI	**TBP18S030**	**729**
MB7113	AMD	AM27S20	
	MMI	6300-1	
		63S140	**4101,4102**
	National	DM74S387	
	Signetics	**N82S126**	**4166**
	TI	TBP24SA10	
MB7114	AMD	27521	
		AM27S11	
		AM27S21	
	MMI	6301-1	
		63S141	**4101,4102**
	National	DM74S287	
	Signetics	**N82S129**	**4166**
	TI	**TBP24S10**	**729**
MB7115	AMD	AM27S12	
	MMI	6305-1	
		63S240	**4101,4102**
	National	DM74S570	
	Signetics	**N82S130**	**4166**
MB7116	AMD	AM27S13	
	Harris	HM7621	
	MMI	6306-1	
		63S241	**4101,4102**
	Motorola	**MCM7621**	**4124**
	National	DM74S571	
	Signetics	**N82S131**	**4166**
MB7117	MMI	6308-1	
	TI	TBP28LA22	
MB7118	MMI	6309-1	
	TI	**TBP28L22**	**729**
MB7121	AMD	AM27S32	
	Fairchild	93452	
	Hitachi	HN25044	
	MMI	5352-1	
		6352	**4102**
	National	DM54S572	
	Signetics	S82S136	
	TI	TBP24SA41M	
MB7122	AMD	AM27S33	
	Fairchild	93453	
	Hitachi	HN25045	
	MMI	5353-1	
		535441	
		6353-1	
		(Continued)	
MB7122	**MMI**	**63S441**	**4101,4102**
		G35441	
	Motorola	**MCM7643**	**4124**
	National	DM74S573	
	NEC	UPB426	
	Signetics	N72HS137	
		N825137	
		N82S137	**4166**
		S82S195	
	TI	TBP24S41	
MB7123	AMD	AM27S28	
	MMI	6348-1	
	National	DM74S473	
	Signetics	N82S146	
	TI	TBP28SA42	
MB7124	AMD	AM27S29	
	MMI	6349-2	
	National	DM54S472	
		DM74S472	
	Raytheon	**29623**	**4134**
	Signetics	N82S147	
MB7127	AMD	AM27S184	
	Hitachi	HM25045	
	MMI	6388	
		6388-1	
	National	DM87S184	
	Signetics	N82S184	
	TI	TBP24SA81	
MB7128	AMD	27S185	
		AM27S185	
	Hitachi	HN25085	
	MMI	5389	
		6389	**4102**
		6389-1	
		63S841	**4101,4102**
	Motorola	**MCM7685**	**4124**
	National	77S185	
		87S185	
		DM87S185	
	Raytheon	29651	
		29651A	**4134**
	Signetics	82S185	
		N82HS185	
		N82S185	**4166**
	TI	24S81	
		TBP24S81	
MB7131	AMD	AM27S180	
	MMI	6380-1	
	National	DM87S180	
		DM87S229	
	Signetics	N82S180	
	TI	TBP28SA86A	
MB7132	AMD	AM27S181M	
	Cypress	CY7C282M	
	Fairchild	932451	
		93451	
	Harris	7681	
	Hitachi	HN25089	
	MMI	5381-1	
		6381	**4102**
		6381-1	
	Motorola	**MCM7681**	**4124**
	National	DM77S181	
		DM77S281	
		DM87S281	
	Raytheon	29631AM	
		29632	
	Signetics	82S181	
		NS82HS195	
		S82HS181	
		S82S181	
	TI	28S86	
		TBP28S86AM	
MB7133	AMD	AM27540	
MB7134	AMD	AM27541	
		AM27S41	
	Fujitsu	MB7152	
	MMI	**53S1641**	**4101**
		63S1641	**4101,4103**
	Motorola	**MCM76161**	**4124**
	National	DM77S195	
		DM87S195	
	Signetics	NS82HS195	
		NS82S195	
MB7137	AMD	AM27S190	
	Fairchild	937510	
	Hitachi	HN25168	
	National	DM77S190	
		DM87S190	
	Signetics	S82S190	
	TI	TBP28SA166	

◆ Discontinued

Bold face device numbers indicate manufacturers data is provided in the IC Master on the pages noted.

Fujitsu Microelectronics, Inc. (Cont'd)

Manufacturer Device	Replacement Source	Device	IC Master Page
MB7138	AMD	27S191	
		AM27S191	
	Fairchild	932511	
	Harris	76161	
		HM76161	
	Hitachi	HN25169	
	MMI	**63S1681**	**4101,4103**
	Motorola	MCM76101	
	National	77S191	
		87S191	
		DM87S191	
	Raytheon	**29681**	**4134**
	Signetics	82S191	
		N82S191	**4167**
	TI	28S166	
		TBP28S166	
MB7138E	EXEL	XL46C16	
	Fairchild	932511M	
	Harris	HM6616	
		HM76161	
	Hitachi	HN25169S	
	MMI	**53S1681**	**4101**
	Motorola	**MCM76161**	**4124**
	National	DM77S191	
		DM77S191A	
		DM77S291	
		DM77S291A	
	Raytheon	**29681**	**4134**
		29681A	**4134**
		29683	**4134**
		29683A	**4134**
	ThomsonCSF	SFC71191A	
MB7138H	AMD	AM27S191	
		AM27S291	
	Fairchild	932511	
	Harris	HM76161	
	MMI	63S181	
	Motorola	MCM76	
	National	DM878291	
	NEC	µPB429	
	Raytheon	**29683A**	**4134**
MB7142	AMD	27S43	
		AM27S43	
	MMI	**53S3281**	**691,4101**
		63S3281	**4101,4103**
	National	77S321	
		87S321	
		DM87S321	
	Raytheon	**29671**	**4134**
	Signetics	82S321	
		N82S321	**4167**
MB7143	Fairchild	93564	
MB7144	AMD	27S49	
		AM27S49	
	Cypress	CY7C264	
	Fairchild	32Z565	
		93565	
	Fujitsu	7144H	
	Harris	76641	
	Raytheon	**29VP864**	**4137**
	Signetics	82641	
MB7151	AMD	AM27S40	
MB7152	AMD	AM27541	
		AM27S41	
	Fujitsu	MB7134	
	MMI	**53S1641**	**4101**
		63S1641	**4101,4103**
	Motorola	**MCM76161**	**4124**
	National	DM77S195	
		DM87S195	
	Signetics	NS82HS195	
		NS82S195	
MB7226	AMD	AM21L49	
		AM27S25	
	Cypress	CY7C225	
	MMI	**53RA481**	**4101**
		63RA481	**4101**
	Motorola	MCM27S25	
	National	DM87SR25	
		DM87SR474	
MB7232	AMD	AM27S35	
		AM27S37	
	Cypress	CY7C235	
	MMI	53RA881	
		63RA881	
			(Continued)
MB7232	**MMI**	**63RS881**	**4101,4103**
	Motorola	MCM27S35	
	National	DM87SR181	
◆MB8116	Hitachi	HM4716A	
	OKI	MSM3716	
	ThomsonCSF	ET4116	
	Toshiba	TMM416	
MB8118	**Fairchild**	**F100422**	**4014**
	Fujitsu	MBM100422	
		MBM100422A	
	Hitachi	HM100422	
		HM4816	
	Intel	2118	
	Mostek	MK4516	
	Motorola	MCM4517	
	National	DM100422	
		NMC5295	
	NEC	UPB100422	
	Signetics	100422	
		GBX100422	
MB81256	AMD	MCM6256	
	AT&T	WCM41256	
	Hitachi	HM50256	
		HM50257	
	MicronTech	MT1256	
	Mitsubishi	M5M4256	
		MSM4257	
	Motorola	MCM6256	
		MCM6257	
	NEC	MPD41257	
		µPD41256	
	OKI	M5M37256	
		MSM37256	
		MSM41256	
	Panasonic	MM41256	
	TI	TMS4257	
	Toshiba	TMM41256	
	Samsung	KM1256	
MB81257	Hitachi	HM50257	
	Mitsubishi	MSM4257	
	NEC	UPD41257	
	TI	TMS4257	
	Toshiba	TMM41257	
MB8128	AMD	AM9128	
		AM9218	
	Cypress	CY7C128	
	Fujitsu	MB8416	
	Harris	HM6116	
		HM6516	
	IDT	IDT6116	
	Intel	2128	
	MicroPwr	MP6116	
	Mitsubishi	M58275	
		M5M116	
		M5M5116	
		M5M5117	
		M5M5118	
		MS8725	
	Motorola	MCM2016	
		MCM2016H	
		MCM2128	
		MCM6116	**4119**
		MCM61L16	**4119**
		MCM65116	
	National	MMC2116	
	NEC	µPD4016	
	OKI	MSM2128	
		MSM5128	**4732,4733**
	RCA	MWS6116A	
	SSS	883C21C16	
		BCM21C16	
		SCM21C16	
		SCM6116	
	TI	TMS4016	
	ThomsonCSF	ET2128	
	Toshiba	**TC5516A**	**4263**
		TMM2015A	
		TMM2016	
		TMM2016A	**4263**
	Samsung	KM6816	
	UMC	UM2128	
	Universal	US574HC133	
MB81416	Hitachi	HM48416	
	Inmos	IMS2620	
	Mitsubishi	M5M4416	
	TI	TMS4416	
MB81461	Hitachi	HM53464	
	NEC	µPD41254	
	TI	TMS4461	
MB81464	Hitachi	HM50464	
	Mitsubishi	MSM4464P	
	NEC	UPD41464C	
	Toshiba	TMM41464	
MB8164A	Cypress	CY7C167	
	Hitachi	HM6167H	
	Inmos	IMS1400	
	Intel	51C66	
		51C67	
	NEC	µPD2167	
		µPD4311	
MB8167A	AMD	AM2167	
	Cypress	CY7C167	
	Fujitsu	MB81C67	
	Harris	HM65262	
	Hitachi	HM6167	
		HM6167H	
		HM6267	
	Inmos	IMS1400	
		IMS1403	**4042**
	IDT	IDT6167	
	Intel	51C67	
	Mitsubishi	M5M2167	
	Motorola	MCM2167H	
	NEC	UPD2167	
MB8168	AMD	AM2168	
		AM99C68	
	Cypress	CY7C168	
	Hitachi	HM6168	
	Inmos	IMS1420	
		IMS1421	
		IMS1423	
	IDT	IDT6168	
	Mitsubishi	M5M2168	
	Motorola	MCM6168	
	TI	TMS2168	
MB8171	Fairchild	F1600	
	Hitachi	HM6287	
	Inmos	IMS1600	
	IDT	IDT7M164	
	Motorola	MCM6164	
	NEC	µPD4361	
	Toshiba	TC5561	
	VTI	VT64KD1	
MB81C258	Hitachi	HM51258	
MB81C67	AMD	AM2167	
	Cypress	CY7C167	
	Fujitsu	MB8167A	
	Harris	HM65262	
	Hitachi	HM6167	
		HM6167H	
		HM6267	
	Inmos	IMS1400	
		IMS1403	**4042**
	IDT	IDT6167	
	Intel	51C67	
	Mitsubishi	M5M2167	
	Motorola	MCM2167H	
	NEC	UPD2167	
MB81C68A	Cypress	CY7C168	
		CY7C169	
	Motorola	MCM6169	
	Toshiba	TMM2068	
		TMM2069	
MB81C71	AMD	AM99C641	
	Fairchild	F1600	
		F1601	
	Fujitsu	MB8171	
	Hitachi	HM10414	
	Motorola	MCM6287	
MB81C74	Lattice	SR64KX4	
◆MB8227	Fairchild	M4027	
MB8264A	Fairchild	F64K	
	Fujitsu	MB8266A	
	Hitachi	HM4864	
	Inmos	IMS2600	
	MicronTech	MT4264	
	Motorola	MCM4164B	
		MCM6665B	
	National	NMC4164	
	NEC	µPD4164	
	OKI	MSM3764	
	ThomsonCSF	ET4164	
	Toshiba	TMM4164	
	Samsung	KM4164	
MB8266A	Fairchild	F64K	
	Fujitsu	MB8264A	
	Hitachi	HM4864	
	Inmos	IMS2600	
	MicronTech	MT4264	
	Motorola	MCM4164B	
		MCM6665B	
			(Continued)
MB8266A	National	NMC4164	
	NEC	µPD4164	
	OKI	MSM3764	
	ThomsonCSF	ET4164	
	Toshiba	TMM4164	
	Samsung	KM4164	
MB831000	Fujitsu	MB831124	
	GI	R091000	
	Hitachi	HN62301	
	NEC	UPD23100	
		UPD231000	
	Toshiba	TC531000	
MB831124	Fujitsu	MB831000	
	GI	R091000	
	Hitachi	HN62301	
	NEC	UPD23100	
		UPD231000	
	Toshiba	TC531000	
MB83256	AMD	AM92256	
	GI	R09256	
	GouldAMI	S23256	
		S38256	
	GTEMicro	G53256	
	Hitachi	HN613256	
	Mitsubishi	M5M23256	
	Mostek	MK38000	
	Motorola	MCM63256	
		MCM65256	
	NCR	NCR23256	
		NCR23257	
	NEC	UPD23256	
		UPD23256A	
		UPD23C256E	
	OKI	**MSM38256**	**4733**
	Panasonic	MN23256	
		MN23257	
	RCA	CDM52356	
		CDM53256	**1673,1678**
	S-MOS	**SMM2326**	**4178**
		SMM6325	**4178**
		SMM6326	**4178**
	Signetics	23256	
		23256A	
	SSS	SCM23C256	
	Supertex	CM2560	
	Toshiba	**TMM23256**	**4263**
	UMC	UM23256	
	VTI	23257	
		VT23256	
		VT23257	
MB8364	Mitsubishi	M58334	
	SSS	SCM23C64	
◆MB8404	GouldAMI	6504	
	Harris	HM6504	
	Hitachi	4315	
		6147	
	Mitsubishi	58981	
	Motorola	6504	
	National	NMC6504	
	OKI	5104	
	RCA	CDM5104	
	Rockwell	R6504	
	Synertek	SY6504	
	Toshiba	TC5504	
◆MB8411	Harris	HM6561	
◆MB8414	Harris	HM6514	
	Hitachi	6148	
		HM4334	
	Mitsubishi	58981	
	Motorola	6514	
	NEC	444	
	OKI	5114	
	RCA	MWS5514	
	Rockwell	R6514	
	Synertek	SY6514	
	Toshiba	TC5514	
MB8416	AMD	AM9128	
		AM9218	
	Cypress	CY7C128	
	Fujitsu	MB8128	
	Harris	HM6116	
		HM6516	
	IDT	IDT6116	
	Intel	2128	
	MicroPwr	MP6116	
	Mitsubishi	M58275	
		M5M116	
		M5M5116	
		M5M5117	
		M5M5118	
		MS8725	
			(Continued)

◆ Discontinued

The manufacturers report their devices can be used as direct replacements.
Performance details often differ, so compare the specifications considering your requirements.

Fujitsu Microelectronics, Inc. (Cont'd)

Manufacturer Device	Replacement Source	Device	IC Master Page
MB8416	Motorola	MCM2016	
		MCM2016H	
		MCM2128	
		MCM6116	**4119**
		MCM61L16	**4119**
		MCM65116	
	National	MMC2116	
	NEC	μPD4016	
	OKI	MSM2128	
		MSM5128	**4732,4733**
	RCA	MWS6116A	
	SSS	883C21C16	
		BCM21C16	
		SCM21C16	
		SCM6116	
	TI	TMS4016	
	ThomsonCSF	ET2128	
	Toshiba	**TC5516A**	**4263**
		TMM2015A	
		TMM2016	
		TMM2016A	**4263**
	Samsung	KM6816	
	UMC	UM2128	
	Universal	US574HC133	
MB8417	RCA	CDM6117	
	S-MOS	SRM2017	
	Toshiba	**TC5516A**	**4263**
MB8418	Hitachi	HM6117	
	NEC	μPD449	
	RCA	CDM6118	
	S-MOS	SRM2018	
	Toshiba	TC5518B	
	UMC	UM2167	
MB84256	Hitachi	HM64456	
	NEC	μPD43256	
	Toshiba	**TC55257**	**4263**
MB8464	AMD	AM9988	
		AM9988C	
	Cypress	CY7C186	
	Fujitsu	MB8464A	
	Hitachi	HM6264	
		HM6464	
	IDT	IDT7188	
		IDT7M864	
	Mitsubishi	M5M5165	
	Motorola	MCM6164	
	NEC	μPD4364	
		μPD4464	
	OKI	MSM5164	
		MSM5165	
	RCA	CDM6264	
	S-MOS	SRM2064	
		SRM2264	**4177,4178**
	Sharp	LH5164	
	Toshiba	TC5564	
		TC5565	
		TMM2063	
		TMM2064	
	Samsung	KM6264	
MB8464A	AMD	AM9988	
		AM9988C	
	Cypress	CY7C186	
	Fujitsu	MB8464	
	Hitachi	HM6264	
		HM6464	
	IDT	IDT7188	
		IDT7M864	
	Mitsubishi	M5M5165	
	Motorola	MCM6164	
	NEC	μPD4364	
		μPD4464	
	OKI	MSM5164	
		MSM5165	
	RCA	CDM6264	
	S-MOS	SRM2064	
		SRM2264	**4177,4178**
	Sharp	LH5164	
	Toshiba	TC5564	
		TC5565	
		TMM2063	
		TMM2064	
	Samsung	KM6264	
MB85101A	TI	TM4164	
◆MBL8035	AMD	8035	
	Intel	8035	
	National	INS8035	
			(Continued)
◆MBL8035	NEC	μPD8035	
	Signetics	SCN8035	
	Toshiba	**TMP8035**	**1750**
◆MBL8048	AMD	8048	
	Intel	8048	
	National	INS8048	
	NEC	μPD8048	
	Signetics	SCN8048	
	Toshiba	**TMP8048**	**1750**
◆MBL8049	Intel	8049	
	National	INS8049	
	NEC	μPD8049	
	Signetics	SCN8049	
	Toshiba	**TMP8049**	**1750**
MBL8088	AMD	8088	
	Intel	8088	
MBL80C31	Intel	80C31	
MBL80C51	Intel	80C51	
MBL8259	AMD	D8259	
	Harris	**82C59A**	**682,1619,1621,1631**
		CP82C59A	
	Intel	8259	
		82C59A	
	National	INS8259	
	NEC	UPD8259A/A-2	
	Nitron	NC82C59A	
	OKI	**MSM82C59A**	**4732**
	S-MOS	SMC82C59AC	
	Toshiba	TMP8259	
MBL8282	**Harris**	**82C82**	**682,1619,1622,1631**
	Intel	8282	
		82C82	
	NEC	UPD71082	
		μPB8282	
	Nitron	NC82C82	
	OKI	82C82	
MBL8284	AMD	8284	
	Harris	82C84	
		82C84A	**682,1619,1623,1631**
	Intel	8284	
		82C84	
		82C84A	
	NEC	UPD71084	
		μPB8284	
	Nitron	NC82C84A	
MBL8286	AMD	8304	
		DP8304	
	Harris	**82C86**	**1619,1622**
	Intel	8286	
		82C86	
	National	DP8304	
	NEC	μPB8286	
		μPD71086	
	Nitron	NC82C86	
	OKI	82C86	
MBL8288	AMD	8288	
	Harris	**82C88**	**682,1619,1623,1631**
	Intel	8288	
		82C88	
	NEC	UPD71088	
		μPB8288	
	Nitron	NC82C88	
	OKI	82C88	
MBL8289	**Harris**	**82C89**	**682,1619,1623,1631**
	Intel	8289	
	NEC	UPB8289	
	Nitron	NC82C89	
MBM100422	**Fairchild**	**F100422**	**4014**
	Fujitsu	MB8118	
		MBM100422A	
	Hitachi	HM100422	
		HM4816	
	Intel	2118	
	Mostek	MK4516	
	Motorola	MCM4517	
	National	DM100422	
		NMC5295	
	NEC	UPB100422	
	Signetics	100422	
		GBX100422	
MBM100422A	**Fairchild**	**F100422**	**4014**
	Fujitsu	MB8118	
		MBM100422	
	Hitachi	HM100422	
		HM4816	
	Intel	2118	
	Mostek	MK4516	
			(Continued)
MBM100422A	Motorola	MCM4517	
	National	DM100422	
		NMC5295	
	NEC	UPB100422	
	Signetics	100422	
		GBX100422	
MBM100470A	AMD	AM10415	
	Fairchild	**F10415**	**4014**
	Fujitsu	MBM10415	
	Hitachi	HM2110	
		HM2112	
	Motorola	**MCM10146**	**4123**
	National	DM10415	
	Siemens	GXB10415	
	Signetics	10415	
MBM100474	AMD	AM100474	
	Fairchild	F100474	
	Fujitsu	MBM100474A	
	Hitachi	100474	
		HM100474	
	NEC	UPB100474	
	Signetics	100474	
MBM100474A	AMD	AM100474	
	Fairchild	F100474	
	Fujitsu	MBM100474	
	Hitachi	100474	
		HM100474	
	NEC	UPB100474	
	Signetics	100474	
MBM100480	AMD	AM100480	
	Fairchild	F100480	
	Hitachi	HM100480	
	NEC	UPB100480	
MBM100484	AMD	AM100484	
	Fairchild	F100484	
	Hitachi	HM100484	
◆MBM10410	Hitachi	HM2105	
MBM10415	AMD	AM10415	
	Fairchild	**F10415**	**4014**
	Fujitsu	MBM100470A	
	Hitachi	HM2110	
		HM2112	
	Motorola	**MCM10146**	**4123**
	National	DM10415	
	Siemens	GXB10415	
	Signetics	10415	
MBM10422A	**Fairchild**	**F10422**	**4014**
	Motorola	**MCM10422**	**4123**
	National	DM10422	
	NEC	UPB10422	
	Signetics	10422	
MBM10470A	AMD	AM10470	
	Hitachi	HM10470	
		HM2142	
	Motorola	MCM10470	
	National	DM10470	
	NEC	UPB10470	
	Signetics	10470	
MBM10474A	AMD	AM10474	
	Fairchild	F10474	
	Hitachi	HM10474	
	Motorola	**MCM10474**	**4123**
	National	DM10474	
	NEC	UPB10474	
	Signetics	10474	
MBM10480	AMD	AM10480	
	Fairchild	F10480	
	Hitachi	HM10480	
	NEC	UPB10480	
MBM10484	AMD	HM10484	
	Fairchild	F10484	
	Hitachi	HM10484	
◆MBM2147H	Cypress	CY2147	
		CY7C147	
	Hitachi	HM6147	
	Intel	2141	
		2147	
		2147-3	
	Motorola	MCM6147	
		MCM61L47	
	National	MM2147	
		NMC2141	
	NEC	MPD2147	
	OKI	MSM5104	
	TI	TMS2147	
	Toshiba	TMM3150	
	UMC	UM2147	
◆MBM2148	AMD	AM2148	
		AM2149	
	Cypress	CY2148	
		CY2149	
		CY7C148	
			(Continued)
◆MBM2148	Cypress	CY7C149	
	Intel	2148H	
		2149H	
	National	NMC2148	
	NEC	UPD2149	
	ThomsonCSF	ET2148	
	UMC	UM2148	
		UM2149	
◆MBM2149	AMD	AM2148	
		AM2149	
	Cypress	CY2148	
		CY2149	
		CY7C148	
		CY7C149	
	Intel	2148H	
		2149H	
	National	NMC2148	
	NEC	UPD2149	
	ThomsonCSF	ET2148	
	UMC	UM2148	
		UM2149	
MBM27128	AMD	AM27128	
	Hitachi	HM4827128	
	Intel	27128	
		27128A	**4074**
	Mitsubishi	M5L27128	
		M5L27C128	
	NEC	μPD27128	
	SEEQ	27128	
	SGS	M27128	
	TI	**TMS27C128**	**4210**
	Toshiba	TMM27128	
◆MBM2716	Hitachi	HN462716	
	National	MM2716	
	OKI	MSM2716	
	SGS	M2716	
	ThomsonCSF	ET2716	
MBM27256	AMD	AM27256	
	Fujitsu	MBM27C256	
	GI	R09256	
	Hitachi	HM4827256	
		HN27256	
		HN27C256	**4037**
	Intel	27256	
		27C256	**4079**
	Mitsubishi	M5L27256	
		MSL27256	
	Motorola	MCM67256	
	National	NMC27C256	
	NEC	MPD27256	
		UPD27256	
		UPD27C256	
		UPD27C256A	
	SEEQ	27256	
		27C256	
	SGS	M27256	
	SSS	SCM27C128	
	Toshiba	TC57256	
		TMM27256	
		TMM27C256	
	VTI	**VT27C256**	**4265,4273**
◆MBM2732	AMD	AM2732	
	Hitachi	HN462732	
	Intel	2732	
		2732A	
		M2732	
	National	MM2732	
		NMC2732	
	Rockwell	R27C32	
	SGS	M2732A	
	Toshiba	TMM324C	
◆MBM2732A	AMD	AM2732	
	Hitachi	HN462732	
	Intel	2732	
		2732A	
		M2732	
	National	MM2732	
		NMC2732	
	Rockwell	R27C32	
	SGS	M2732A	
	Toshiba	TMM324C	
MBM27512	AMD	AM27512	
	Fujitsu	MBM27C512	
	Hitachi	HN27512	
	Intel	**27512**	**4076**
	Mitsubishi	M5L27512	
	NEC	MPD27C512	
	Toshiba	**TMM27512**	**4263**
MBM2764	AMD	AM2764	
	Fujitsu	MBM27C64	
	Hitachi	HM482764	
			(Continued)

◆ Discontinued

Bold face device numbers indicate manufacturers data is provided in the IC Master on the pages noted.

Fujitsu Microelectronics, Inc. (Cont'd)

Manufacturer Device	Replacement Source	Device	IC Master Page
MBM2764	Hitachi	HN2764	
		HN27C64	
		HN482764	
	Intel	2764	
		2764A	
		27C64	**4078**
		87C64	**4078**
	Mitsubishi	M5L2764	
	NEC	UPD2764	
		UPD27C64	
	OKI	MSM2764	
		MSM2764A	**4732**
		MSM27C64	
	Rockwell	R2764	
		R27C64	
		R87C64	
	S-MOS	SPM27C64	
	SEEQ	2764	
		5133	
	SGS	M2764	
	Signetics	27C64	
	SSS	SCM27C64	
	TI	TMS27C64	
	ThomsonCSF	ET2764	
	Toshiba	**TMM2764**	**4263**
MBM27C1024	AMD	AM27C1024	
	NEC	MPD27C1000	
MBM27C256	AMD	AM27256	
	Fujitsu	MBM27256	
	GI	R09256	
	Hitachi	HM4827256	
		HN27256	
		HN27C256	**4037**
	Intel	27256	
		27C256	**4079**
	Mitsubishi	M5L27256	
		MSL27256	
	Motorola	MCM67256	
	National	NMC27C256	
	NEC	MPD27256	
		UPD27256	
		UPD27C256	
		UPD27C256A	
	SEEQ	27256	
		27C256	
	SGS	M27256	
	SSS	SCM27C128	
	Toshiba	TC57256	
		TMM27256	
		TMM27C256	
	VTI	**VT27C256**	**4265,4273**
MBM27C512	AMD	AM27512	
	Fujitsu	MBM27512	
	Hitachi	HN27512	
	Intel	**27512**	**4076**
	Mitsubishi	M5L27512	
	NEC	MPD27C512	
	Toshiba	**TMM27512**	**4263**
MBM27C64	AMD	AM2764	
	Fujitsu	MBM2764	
	Hitachi	HM482764	
		HN2764	
		HN27C64	
		HN482764	
	Intel	2764	
		2764A	
		27C64	**4078**
		87C64	**4078**
	Mitsubishi	M5L2764	
	NEC	UPD2764	
		UPD27C64	
	OKI	MSM2764	
		MSM2764A	**4732**
		MSM27C64	
	Rockwell	R2764	
		R27C64	
		R87C64	
	S-MOS	SPM27C64	
	SEEQ	2764	
		5133	
	SGS	M2764	
	Signetics	27C64	
	SSS	SCM27C64	
	TI	TMS27C64	
	ThomsonCSF	ET2764	
	Toshiba	**TMM2764**	**4263**

Manufacturer Device	Replacement Source	Device	IC Master Page
MBM28C65	AMD	AM9864	
	EXEL	XL48C64	
	Intel	**2864**	**4068**
MBM7124	National	DM54S472	
	Signetics	S82S147	
	TI	DM54S472	
◆MBM8114	AMD	AM9114	
	Fairchild	F2114	
	Hitachi	HM472114	
	Intel	2114	
		2114A	
	Mitsubishi	M5L2114	
	Motorola	M5L2114	
		MCM2114	
		MCM21L14	
	National	NMC2114A	
	OKI	MSM2114	
	SSS	SCM2114A	
		SCM21C14	
	Synertek	SY2114	
	Toshiba	TMM2114A	
		TMM314A	
	UMC	UM2114	
MBM93419	Fairchild	F93419	
UBM28C64	AMD	AM2864B	
		AM9864	
	EXEL	XL2864A	
		XLS2864A	
	Hitachi	HN58064	
	SEEQ	2864	
	Xicor	**X2864A**	**734,4280**

General Instrument

Manufacturer Device	Replacement Source	Device	IC Master Page
32010	TI	TMS32010	
◆AY3-0215	Mostek	MK50240	
◆AY3-1014A	Fairchild	F6850	
	GouldAMI	S1602	
	Hitachi	HD6850	
	Motorola	**MC6850**	**1663**
	ThomsonCSF	EF6850	
AY3-8913	NCR	NCR8489	
	TI	SN76489	
◆AY5-1013A	Fairchild	F6850	
	GouldAMI	S1602	
	Hitachi	HD6850	
	Motorola	**MC6850**	**1663**
	ThomsonCSF	EF6850	
◆AY5-3507	Plessey	MP3202	
AY5-8116	SMC	COM8116	
	Western	WD1943	
AY5-8136	SMC	COM8136	
◆AY6-1013	Fairchild	F6850	
	GouldAMI	S1602	
	Hitachi	HD6850	
	Motorola	**MC6850**	**1663**
	ThomsonCSF	EF6850	
ER3400	Hughes	HNVM3104A	
ER5904	**Xicor**	**X2804A**	**734,4279**
ER5911	Hyundai	HY93C46	
	National	COP495	
		NMC9346	
	NCR	59346	
		NCR59308	**4128**
	SGS	M9346	
	Sierra	SC22011	
ER59256	National	COP494	
		NMC9306	
	NCR	**NCR59306**	**4128**
◆MEM4053	Fairchild	F4053	
	Motorola	MC14053	
	National	CD4053	
	RCA	CD4053	
	SGS	HCC/HCF4053	
	Signetics	HEF4053	
	Solitron	CM4053	
	SSS	SCL4053	
	Toshiba	**TC4053B**	**1363**
PIC1650A	Plessey	PIC1650A	
PIC1654	Plessey	PIC1654	
PIC1655A	Plessey	PIC1655A	
PIC1656	Plessey	PIC1656	
PIC1670	Plessey	PIC1670	
PIC7000	TI	TMS7000	
PIC7020	TI	TMS7020	
PIC7040	TI	TMS7040	
PIC7041	TI	TMS7041	
PIC70C00	TI	TMS70C00	
PIC70C20	TI	TMS70C20	
R03-9333	Amperex	AM9233	
	CSG	MPS2333	
	Fairchild	F3533	

(Continued)

Manufacturer Device	Replacement Source	Device	IC Master Page
R03-9333	GouldAMI	S2333	
	NEC	UPD23328	
	RCA	**CDM5332**	**1673,1677,1678**
	Signetics	2332	
	SSS	SCM23C33	
	Supertex	23C32	
	Synertek	SY2333	
	Toshiba	TMM2332	
	Universal	UM2333	
R091000	Fujitsu	MB831000	
		MB831124	
	Hitachi	HN62301	
	NEC	UPD23100	
		UPD231000	
	Toshiba	TC531000	
R09128	AMD	AM92128	
	GI	SPR-128	
	GouldAMI	S23128	
		S3630A	
	GTEMicro	G53128	
	Hitachi	HN613128	
		HN613128P	
	Mitsubishi	M5M23128	
	Motorola	MCM63128	
	NCR	NCR23128	
	NEC	UPD23128	
		UPD23128A	
		UPD23128E	
		UPD23C128	
		UPD23C128E	
	RCA	**CDM53128**	**1673,1677**
	Rockwell	R23128	
	Signetics	23128	
	SSS	SCM23C128	
	Supertex	CM1310	
	Synertek	SY23128	
	Toshiba	TMM23128	
	UMC	UM23128	
	VTI	23131	
		VT23128	
		VT23129	
		VT23129A	
		VT23130	
		VT23138	
R09256	AMD	AM92256	
	Fujitsu	MB83256	
	GouldAMI	S23256	
		S38256	
	GTEMicro	G53256	
	Hitachi	HN613256	
	Mitsubishi	M5M23256	
	Mostek	MK38000	
	Motorola	MCM63256	
		MCM65256	
	NCR	NCR23256	
		NCR23257	
	NEC	UPD23256	
		UPD23256A	
		UPD23C256E	
	OKI	**MSM38256**	**4733**
	Panasonic	MN23256	
		MN23257	
	RCA	CDM52356	
		CDM53256	**1673,1678**
	S-MOS	**SMM2326**	**4178**
		SMM6325	**4178**
		SMM6326	**4178**
	Signetics	23256	
		23256A	
	SSS	SCM23C256	
	Supertex	CM2560	
	Toshiba	**TMM23256**	**4263**
	UMC	UM23256	
	VTI	23257	
		VT23256	
		VT23257	
R03-9332	AMD	AM9232	
	CSG	MPS2332	
	Fairchild	F3532	
	GouldAMI	S2333	
		S68A332	
	GTEMicro	G2332	
	Hitachi	HN46332	
	Intech	IM7332	
	Intel	2332	
	Mitsubishi	M58333	
	Motorola	**MCM68A332**	**4120**
	National	NM52132	
	NCR	NCR2332	

(Continued)

Manufacturer Device	Replacement Source	Device	IC Master Page
R03-9332	NEC	UPD2332A	
	Panasonic	MN2332	
	RCA	**CDM5333**	**1673,1677**
	Rockwell	R2332	
	SGS	M2332	
	Sharp	LH2332	
	Siemens	SA88332	
		SAB8332	
	Signetics	2332	
		2632A	
	SiliconG	SG3532	
	SSS	SCM23C32	
	SMC	ROM4732	
	Supertex	23SC32	
		CM3200	
	Synertek	SY2332	
	TI	TM2332	
		TMS2332	
		TMS4732	
	Toshiba	TMM2332	
		TMM333P	
	VTI	VT2332	
R03-9364	AMD	9264	
	GouldAMI	S68A364	
	Hitachi	HN48364	
	Intech	IM7364	
	MicroPwr	MP2364C	
	Mitsubishi	M58334	
	Mostek	MK36000	
	Motorola	**MCM68364**	**4120**
		MCM68365	**4120**
		MCM68366	**4120**
	National	MM52164	
	NEC	UPD2364	
	Rockwell	R2364A	
	SGS	M2362	
		M36000	
	Signetics	2664	
		26S64	
	SSS	SCM23C64	
	SMC	ROM36000	
	Synertek	SY2364/A	
	TI	TMS4764	
	Toshiba	TMM2366	
R03-9365	AMD	AM9265	
	Fairchild	F3568	
		F3569	
		F3570	
	GI	R09864	
	GouldAMI	S2364	
		S6364	
	GTEMicro	G5364	
	Hitachi	HN61364	
	Intel	2364A	
	Mitsubishi	M5M2364	
		M5M2365	
		M5M23C64	
	Mostek	MK37000	
	Motorola	MCM68369	
		MCM68370	
	National	MM52264	
		NM52264	
	OKI	**MSM3864**	**4733**
	Panasonic	MN2364	
		MN4864	
	RCA	**CDM5365**	**1673,1677**
	Rockwell	R2364B	
	SSS	SCM23C65	
	Supertex	23SC64	
		23SC64/A	
		CM6400	
	Synertek	SY2365/A	
	TI	TMS2364	
		TMS4764	
	Toshiba	TMM2365	
	UMC	UM2366	
	VTI	VT2365	
◆R03-9367	AMD	AM9265	
	Fairchild	F3568	
		F3569	
		F3570	
	GI	R03-9365	
		R09864	
	GouldAMI	S2364	
		S6364	
	GTEMicro	G5364	
	Hitachi	HN61364	
	Intel	2364A	
	Mitsubishi	M5M2364	
		M5M2365	

(Continued)

◆ Discontinued

The manufacturers report their devices can be used as direct replacements.
Performance details often differ, so compare the specifications considering your requirements.

General Instrument (Cont'd)

Manufacturer Device	Replacement Source	Device	IC Master Page
◆R03-9367	Mitsubishi	M5M23C64	
	Mostek	MK37000	
	Motorola	MCM68369	
		MCM68370	
	National	MM52264	
		NM52264	
	OKI	**MSM3864**	**4733**
	Panasonic	MN2364	
		MN4864	
	RCA	**CDM5365**	**1673,1677**
	Rockwell	R2364B	
	SSS	SCM23C65	
	Supertex	23SC64	
		23SC64/A	
		CM6400	
	Synertek	SY2365/A	
	TI	TMS2364	
		TMS4764	
	Toshiba	TMM2365	
	UMC	UM2366	
	VTI	VT2365	
R09256	AMD	AM27256	
	Fujitsu	MBM27256	
		MBM27C256	
	Hitachi	HM4827256	
		HN27256	
		HN27C256	**4037**
	Intel	27256	
		27C256	**4079**
	Mitsubishi	M5L27256	
		MSL27256	
	Motorola	MCM67256	
	National	NMC27C256	
	NEC	MPD27256	
		UPD27256	
		UPD27C256	
		UPD27C256A	
	SEEQ	27256	
		27C256	
	SGS	M27256	
	SSS	SCM27C128	
	Toshiba	TC57256	
		TMM27256	
		TMM27C256	
	VTI	**VT27C256**	**4265,4273**
R09508	AMD	9240	
R09580	AMD	9280	
R09864	AMD	AM9265	
	Fairchild	F3568	
		F3569	
		F3570	
	GI	R03-9365	
	GouldAMI	S2364	
		S6364	
	GTEMicro	G5364	
	Hitachi	HN61364	
	Intel	2364A	
	Mitsubishi	M5M2364	
		M5M2365	
		M5M23C64	
	Mostek	MK37000	
	Motorola	MCM68369	
		MCM68370	
	National	MM52264	
		NM52264	
	OKI	**MSM3864**	**4733**
	Panasonic	MN2364	
		MN4864	
	RCA	**CDM5365**	**1673,1677**
	Rockwell	R2364B	
	SSS	SCM23C65	
	Supertex	23SC64	
		23SC64/A	
		CM6400	
	Synertek	SY2365/A	
	TI	TMS2364	
		TMS4764	
	Toshiba	TMM2365	
	UMC	UM2366	
	VTI	VT2365	
SPR-128	AMD	AM92128	
	GI	R09128	
	GouldAMI	S23128	
		S3630A	
	GTEMicro	G53128	
	Hitachi	HN613128	
		HN613128P	
	Mitsubishi	M5M23128	
	Motorola	MCM63128	
	NCR	NCR23128	
	NEC	UPD23128	
		UPD23128A	
		UPD23128E	
		UPD23C128	
		UPD23C128E	
	RCA	**CDM53128**	**1673,1677**
	Rockwell	R23128	
	Signetics	23128	
	SSS	SCM23C128	
	Supertex	CM1310	
	Synertek	SY23128	
	Toshiba	TMM23128	
	UMC	UM23128	
	VTI	23131	
		VT23128	
		VT23129	
		VT23129A	
		VT23130	
		VT23138	

Gould AMI Semiconductors

Manufacturer Device	Replacement Source	Device	IC Master Page
1010	SBE	1010	
1020	SBE	1020	
1120	SBE	1120	
560	SBE	560	
590	SBE	590	
6504	Harris	HM6504	
	Hitachi	4315	
		6147	
	Mitsubishi	58981	
	Motorola	6504	
	National	NMC6504	
	OKI	5104	
	RCA	CDM5104	
	Rockwell	R6504	
	Synertek	SY6504	
	Toshiba	TC5504	
6508	Fujitsu	8401	
	Harris	HM6508	
	Intersil	6508	
		IM6508-1	
	MicroPwr	6508	
	National	6508	
		74C929	
	NEC	443	
	RCA	6508	
	Toshiba	5508	
6516	Harris	HM6516	
	National	6516	
6518	Harris	HM6518	
	MicroPwr	6518	
	Motorola	6518	
	National	MM74C930	
◆733	Fairchild	μA733	
	Hitachi	HA17733	
	Intersil	μA733	
	Motorola	**MC1733**	**3616**
		NE592	
	National	LM733	
	Signetics	**μA733**	**3721,3729**
	TI	μA733	
7720	NEC	μPD7720A	
GA1000D	Mostek	GA1000D	
GA2000D	Mostek	GA2000D	
GA3000D	Mostek	GA3000D	
GA4000D	Mostek	GA4000D	
S1602	Fairchild	F6850	
	Hitachi	HD6850	
	Motorola	**MC6850**	**1663**
	ThomsonCSF	EF6850	
◆S1863	Fairchild	F6850	
	GouldAMI	S1602	
	Hitachi	HD6850	
	Motorola	**MC6850**	**1663**
	ThomsonCSF	EF6850	
S2182	Fairchild	3347	
	GouldAMI	S2183	
		S2185	
	SMC	SR5015	
S2183	Fairchild	3347	
	GouldAMI	S2182	
		S2185	
	SMC	SR5015	
S2185	Fairchild	3347	
	GouldAMI	S2182	
		S2183	
	SMC	SR5015	
S23128	AMD	AM92128	
	GI	R09128	
		SPR-128	
	GouldAMI	S3630A	
	GTEMicro	G53128	
	Hitachi	HN613128	
		HN613128P	
	Mitsubishi	M5M23128	
	Motorola	MCM63128	
	NCR	NCR23128	
	NEC	UPD23128	
		UPD23128A	
		UPD23128E	
		UPD23C128	
		UPD23C128E	
	RCA	**CDM53128**	**1673,1677**
	Rockwell	R23128	
	Signetics	23128	
	SSS	SCM23C128	
	Supertex	CM1310	
	Synertek	SY23128	
	Toshiba	TMM23128	
	UMC	UM23128	
	VTI	23131	
		VT23128	
		VT23129	
		VT23129A	
		VT23130	
		VT23138	
S23256	AMD	AM92256	
	Fujitsu	MB83256	
	GI	R09256	
	GouldAMI	S38256	
	GTEMicro	G53256	
	Hitachi	HN613256	
	Mitsubishi	M5M23256	
	Mostek	MK38000	
	Motorola	MCM63256	
		MCM65256	
	NCR	NCR23256	
		NCR23257	
	NEC	UPD23256	
		UPD23256A	
		UPD23C256E	
	OKI	**MSM38256**	**4733**
	Panasonic	MN23256	
		MN23257	
	RCA	CDM52356	
		CDM53256	**1673,1678**
	S-MOS	**SMM2326**	**4178**
		SMM6325	**4178**
		SMM6326	**4178**
	Signetics	23256	
		23256A	
	SSS	SCM23C256	
	Supertex	CM2560	
	Toshiba	**TMM23256**	**4263**
	UMC	UM23256	
	VTI	23257	
		VT23256	
		VT23257	
S2333	AMD	AM9232	
	CSG	MPS2332	
	Fairchild	F3532	
	GI	R03-9332	
	GouldAMI	S68A332	
	GTEMicro	G2332	
	Hitachi	HN46332	
	Intech	IM7332	
	Intel	2332	
	Mitsubishi	M58333	
	Motorola	**MCM68A332**	**4120**
	National	NM52132	
	NCR	NCR2332	
	NEC	UPD2332A	
	Panasonic	MN2332	
	RCA	**CDM5333**	**1673,1677**
	Rockwell	R2332	
	SGS	M2332	
	Sharp	LH2332	
	Siemens	SA88332	
		SAB8332	
	Signetics	2332	
		2632A	
	SiliconG	SG3532	
	SSS	SCM23C32	
	SMC	ROM4732	
	Supertex	23SC32	
		CM3200	
S2333	Synertek	SY2332	
	TI	TM2332	
		TMS2332	
		TMS4732	
	Toshiba	TMM2332	
		TMM333P	
	VTI	VT2332	
S2364	AMD	AM9265	
	Fairchild	F3568	
		F3569	
		F3570	
	GI	R03-9365	
		R09864	
	GouldAMI	S6364	
	GTEMicro	G5364	
	Hitachi	HN61364	
	Intel	2364A	
	Mitsubishi	M5M2364	
		M5M2365	
		M5M23C64	
	Mostek	MK37000	
	Motorola	MCM68369	
		MCM68370	
	National	MM52264	
		NM52264	
	OKI	**MSM3864**	**4733**
	Panasonic	MN2364	
		MN4864	
	RCA	**CDM5365**	**1673,1677**
	Rockwell	R2364B	
	SSS	SCM23C65	
	Supertex	23SC64	
		23SC64/A	
		CM6400	
	Synertek	SY2365/A	
	TI	TMS2364	
		TMS4764	
	Toshiba	TMM2365	
	UMC	UM2366	
	VTI	VT2365	
S2560	SGS	M2560	
S2560A	S-MOS	STC2560C	
	SGS	M2560A	
S2569	SGS	M2569	
◆S2688	National	MM5837	
S3506	Plessey	MV3506	
S3507	Plessey	MV3507	
S35212	Reticon	R5632	
	GouldAMI	**S35212A**	**3582**
	Mitel	S35212A	
	Sierra	SC11000	
		SC11005	
S35212A	Reticon	R5632	
	GouldAMI	**S35212**	**3582**
	Mitel	S35212A	
	Sierra	SC11000	
		SC11005	
S35213	Mitel	MT35213	
S3525A	GouldAMI	S3525B	
	SiliconSys	SSI3525	
S3525B	GouldAMI	S3525A	
	SiliconSys	SSI3525	
S3530	Mitel	MT3530	
S3630A	AMD	AM92128	
	GI	R09128	
		SPR-128	
	GouldAMI	S23128	
	GTEMicro	G53128	
	Hitachi	HN613128	
		HN613128P	
	Mitsubishi	M5M23128	
	Motorola	MCM63128	
	NCR	NCR23128	
	NEC	UPD23128	
		UPD23128A	
		UPD23128E	
		UPD23C128	
		UPD23C128E	
	RCA	**CDM53128**	**1673,1677**
	Rockwell	R23128	
	Signetics	23128	
	SSS	SCM23C128	
	Supertex	CM1310	
	Synertek	SY23128	
	Toshiba	TMM23128	
	UMC	UM23128	
	VTI	23131	
		VT23128	
		VT23129	
		VT23129A	

(Continued)

◆ Discontinued

Bold face device numbers indicate manufacturers data is provided in the IC Master on the pages noted.

Gould AMI Semiconductors (Cont'd)

Manufacturer Device	Replacement Source	Device	IC Master Page
S3630A	VTI	VT23130	
		VT23138	
S38256	AMD	AM92256	
	Fujitsu	MB83256	
	GI	R09256	
	GouldAMI	S23256	
	GTEMicro	G53256	
	Hitachi	HN613256	
	Mitsubishi	M5M23256	
	Mostek	MK38000	
	Motorola	MCM63256	
		MCM65256	
	NCR	NCR23256	
		NCR23257	
	NEC	UPD23256	
		UPD23256A	
		UPD23C256E	
	OKI	**MSM38256**	**4733**
	Panasonic	MN23256	
		MN23257	
	RCA	CDM52356	
		CDM53256	**1673,1678**
	S-MOS	**SMM2326**	**4178**
		SMM6325	**4178**
		SMM6326	**4178**
	Signetics	23256	
		23256A	
	SSS	SCM23C256	
	Supertex	CM2560	
	Toshiba	**TMM23256**	**4263**
	UMC	UM23256	
	VTI	23257	
		VT23256	
		VT23257	
S44231	Hitachi	HD44231	
S44232	Hitachi	HD44232	
S44233	Hitachi	HD44233	
S44234	Hitachi	HD44234	
S44235	Hitachi	HD44235	
S44236	Hitachi	HD44236	
S44237	Hitachi	HD44237	
S44238	Hitachi	HD44238	
S4521	Hughes	HLCD0438	
	National	MM58438	
S4534	Sprague	UCN-5810	
	TI	UCN4810A	
S4535	Sprague	UCN-5818	
	TI	SN75518	
◆S50240	Mostek	MK50240	
S5101	GouldAMI	S6501	
	Harris	MH6501	
	Hitachi	HM435101	
	Intel	5101	
	Motorola	MCM5101	
		MCMS1L01	
	National	MM74C920	
	Panasonic	MNS101	
	RCA	**MWS5101**	**1673,1676**
	Sharp	LH5101	
	SSS	SCM5101	
	Synertek	SY2101	
	Toshiba	TC5501	
S6364	AMD	AM9265	
	Fairchild	F3568	
		F3569	
		F3570	
	GI	R03-9365	
		R09864	
	GouldAMI	S2364	
	GTEMicro	G5364	
	Hitachi	HN61364	
	Intel	2364A	
	Mitsubishi	M5M2364	
		M5M2365	
		M5M23C64	
	Mostek	MK37000	
	Motorola	MCM68369	
		MCM68370	
	National	MM52264	
		NM52264	
	OKI	**MSM3864**	**4733**
	Panasonic	MN2364	
		MN4864	
	RCA	**CDM5365**	**1673,1677**
	Rockwell	R2364B	
	SSS	SCM23C65	
S6364	Supertex	23SC64	
		23SC64/A	
		CM6400	
	Synertek	SY2365/A	
	TI	TMS2364	
		TMS4764	
	Toshiba	TMM2365	
	UMC	UM2366	
	VTI	VT2365	
S6501	GouldAMI	S5101	
	Harris	MH6501	
	Hitachi	HM435101	
	Intel	5101	
	Motorola	MCM5101	
		MCMS1L01	
	National	MM74C920	
	Panasonic	MNS101	
	RCA	**MWS5101**	**1673,1676**
	Sharp	LH5101	
	SSS	SCM5101	
	Synertek	SY2101	
	Toshiba	TC5501	
◆S6514	Harris	HM6514	
	Hitachi	6148	
		HM4334	
	Mitsubishi	58981	
	Motorola	6514	
	NEC	444	
	OKI	5114	
	RCA	MWS5514	
	Rockwell	R6514	
	Synertek	SY6514	
	Toshiba	TC5514	
S6551	National	6551	
	RCA	1822	
	Rockwell	R6551	
	Toshiba	5101	
S6801	Hitachi	HD6801	
	ThomsonCSF	EF6801	
S6802	Fairchild	F6802	
	Hitachi	HD6802	
	Motorola	**MC6802**	**1660**
	ThomsonCSF	EF6802	
S6805	Hitachi	HD6805	
	Motorola	**MC6805**	**1664,1667,1905**
	ThomsonCSF	EF6805	
S6808	Fairchild	F6808	
	Motorola	**MC6808**	**1660**
	ThomsonCSF	EF6808	
S6809	Hitachi	HD6809	
		HD68A09	
		HD68B09	
	Motorola	**MC6809**	**1660,1905**
	ThomsonCSF	EF6809	
S6810	Fairchild	F6810	
	Hitachi	HD6810	
		HD68A10	
	Motorola	MC6810	
		MCM6810	**1662,4119**
	ThomsonCSF	EF6810	
S6821	Fairchild	F6821	
	Hitachi	HD6821	
		HD68A21	
		HD68B21	
	ThomsonCSF	EF6821	
S68364	AMD	AM9264	
	Motorola	**MCM68364**	**4120**
		MCM68365	**4120**
		MCM68366	**4120**
	NCR	NCR2365	
	NEC	UPD2364E	
	Rockwell	R2364	
	Signetics	2364	
		2664	
	VTI	VT2365	
S6840	Fairchild	F6840	
	Hitachi	HD6840	
	Motorola	**MC6840**	**1663**
S6846	Fairchild	F6846	
	Hitachi	HD6846	
	ThomsonCSF	EF6846	
S684SE	Fairchild	F6845	
	Hitachi	HD6845	
	Motorola	**MC6845**	**1661**
S6852	Fairchild	F6852	
	Hitachi	HD6852	
	Motorola	**MC6852**	**1663**
S6854	Fairchild	F6854	
	ThomsonCSF	EF6854	
S68A00	Motorola	MC68A00	
S68A10	Motorola	MC68A10	
S68A21	Motorola	MC68A21	
S68A332	AMD	AM9232	
	CSG	MPS2332	
	Fairchild	F3532	
	GI	R03-9332	
	GouldAMI	S2333	
	GTEMicro	G2332	
	Hitachi	HN46332	
	Intech	IM7332	
	Intel	2332	
	Mitsubishi	M58333	
	Motorola	**MCM68A332**	**4120**
	National	NM52132	
	NCR	NCR2332	
	NEC	UPD2332A	
	Panasonic	MN2332	
	RCA	**CDM5333**	**1673,1677**
	Rockwell	R2332	
	SGS	M2332	
	Sharp	LH2332	
	Siemens	SA88332	
		SAB8332	
	Signetics	2332	
		2632A	
	SiliconG	SG3532	
	SSS	SCM23C32	
	SMC	ROM4732	
	Supertex	23SC32	
		CM3200	
	Synertek	SY2332	
	TI	TM2332	
		TMS2332	
		TMS4732	
	Toshiba	TMM2332	
		TMM333P	
	VTI	VT2332	
S68A364	AMD	9264	
	GI	R03-9364	
	Hitachi	HN48364	
	Intech	IM7364	
	MicroPwr	MP2364C	
	Mitsubishi	M58334	
	Mostek	MK36000	
	Motorola	**MCM68364**	**4120**
		MCM68365	**4120**
		MCM68366	**4120**
	National	MM52164	
	NEC	UPD2364	
	Rockwell	R2364A	
	SGS	M2362	
		M36000	
	Signetics	2664	
		26S64	
	SSS	SCM23C64	
	SMC	ROM36000	
	Synertek	SY2364/A	
	TI	TMS4764	
	Toshiba	TMM2366	
S68A50	Motorola	MC68A50	
S68A54	Motorola	MC68A54	
S68B00	Motorola	MC68B00	
S68B10	Motorola	MC68B10	
S68B21	Motorola	MC68B21	
S68B50	Motorola	MC68B50	
S68B54	Motorola	MC68B54	
S7720	NEC	UPD7720	
S8940	Mitel	MT8940	
S8964	Mitel	MT8964	
	Plessey	MV8964	
S8965	Mitel	MT8965	
	Plessey	MV8965	
S8970	Mitel	MT8970	
S8975	Mitel	MT8975	
S8978	Mitel	MT8978	
S8980	Mitel	MT8980	
S8981	Mitel	MT8981	
S9224	SMC	HDC9224	
S9900	TI	TMS9900	
S9901	**TI**	**TMS9901**	**731**
S9902	TI	TMS9902	
S9980	TI	TMS9980	
UA-1	CalDevices	HC3100	
UA-2	CalDevices	HC4100	
UA-3	CalDevices	HC5400	
UA-4	CalDevices	HC7700	
UA-5	CalDevices	HC10000	
UA-6	CalDevices	HC12600	

GTE Microcircuits

Manufacturer Device	Replacement Source	Device	IC Master Page
G2332	AMD	AM9232	
	CSG	MPS2332	
	Fairchild	F3532	
	GI	R03-9332	
	GouldAMI	S2333	
		S68A332	
	Hitachi	HN46332	
	Intech	IM7332	
	Intel	2332	
	Mitsubishi	M58333	
	Motorola	**MCM68A332**	**4120**
	National	NM52132	
	NCR	NCR2332	
	NEC	UPD2332A	
	Panasonic	MN2332	
	RCA	**CDM5333**	**1673,1677**
	Rockwell	R2332	
	SGS	M2332	
	Sharp	LH2332	
	Siemens	SA88332	
		SAB8332	
	Signetics	2332	
		2632A	
	SiliconG	SG3532	
	SSS	SCM23C32	
	SMC	ROM4732	
	Supertex	23SC32	
		CM3200	
	Synertek	SY2332	
	TI	TM2332	
		TMS2332	
		TMS4732	
	Toshiba	TMM2332	
		TMM333P	
	VTI	VT2332	
◆G4200	NEC	μPD410	
◆G4300	NEC	μPD410	
◆G4320	ITT	DF320	
	Mitel	MT4320	
G53128	AMD	AM92128	
	GI	R09128	
		SPR-128	
	GouldAMI	S23128	
		S3630A	
	Hitachi	HN613128	
		HN613128P	
	Mitsubishi	M5M23128	
	Motorola	MCM63128	
	NCR	NCR23128	
	NEC	UPD23128	
		UPD23128A	
		UPD23128E	
		UPD23C128	
		UPD23C128E	
	RCA	**CDM53128**	**1673,1677**
	Rockwell	R23128	
	Signetics	23128	
	SSS	SCM23C128	
	Supertex	CM1310	
	Synertek	SY23128	
	Toshiba	TMM23128	
	UMC	UM23128	
	VTI	23131	
		VT23128	
		VT23129	
		VT23129A	
		VT23130	
		VT23138	
G53256	AMD	AM92256	
	Fujitsu	MB83256	
	GI	R09256	
	GouldAMI	S23256	
		S38256	
	Hitachi	HN613256	
	Mitsubishi	M5M23256	
	Mostek	MK38000	
	Motorola	MCM63256	
		MCM65256	
	NCR	NCR23256	
		NCR23257	
	NEC	UPD23256	
		UPD23256A	
		UPD23C256E	
	OKI	**MSM38256**	**4733**
	Panasonic	MN23256	
		MN23257	
	RCA	CDM52356	

(Continued)

◆ Discontinued

The manufacturers report their devices can be used as direct replacements.
Performance details often differ, so compare the specifications considering your requirements.

GTE Microcircuits (Cont'd)

Manufacturer Device	Replacement Source	Device	IC Master Page
G53256	**RCA**	**CDM53256**	**1673,1678**
	S-MOS	**SMM2326**	**4178**
		SMM6325	**4178**
		SMM6326	**4178**
	Signetics	23256	
		23256A	
	SSS	SCM23C256	
	Supertex	CM2560	
	Toshiba	**TMM23256**	**4263**
	UMC	UM23256	
	VTI	23257	
		VT23256	
		VT23257	
G5364	AMD	AM9265	
	Fairchild	F3568	
		F3569	
		F3570	
	GI	R03-9365	
		R09864	
	GouldAMI	S2364	
		S6364	
	Hitachi	HN61364	
	Intel	2364A	
	Mitsubishi	M5M2364	
		M5M2365	
		M5M23C64	
	Mostek	MK37000	
	Motorola	MCM68369	
		MCM68370	
	National	MM52264	
		NM52264	
	OKI	**MSM3864**	**4733**
	Panasonic	MN2364	
		MN4864	
	RCA	**CDM5365**	**1673,1677**
	Rockwell	R2364B	
	SSS	SCM23C65	
	Supertex	23SC64	
		23SC64/A	
		CM6400	
	Synertek	SY2365/A	
	TI	TMS2364	
		TMS4764	
	Toshiba	TMM2365	
	UMC	UM2366	
	VTI	VT2365	
G65C51	Rockwell	R65C51	
G65SC02	**NCR**	**NCR65C02**	**1671**
	Rockwell	R65C02	
G65SC102	Rockwell	R65SC102	
G65SC112	Rockwell	R65SC112	
G65SC21	Rockwell	R65C21	
G65SC51	Rockwell	R65C51	
G65SC802	GTEMicro	G65SC816	
	WDC	65C802	
G65SC816	**GTEMicro**	**G65SC802**	**1617**
	WDC	65C802	
G74SC245	CTI	74HCT245	
	Hitachi	HD74HCT245	
	Micrel	MIC74HCT245	
	MicroTech	74HCTR245	
	Mitel	MD74HCT245	
	Motorola	MC74HCT245	
	National	MM74HCT245	
	Plessey	MV74HCT245	
		MV74SC245	
	RCA	**CD74HCT245**	**1149**
	SPI	SP74HCT245	
	SGS	M74HCT245	
	Signetics	**74HCT245**	**1158**
	SSS	SS74HCT245	
	TI	SN74HCT245	
	Toshiba	**TC74HCT245**	**1363**
	Universal	US74HCT245	
G74SC373	CTI	74HCT373	
	Hitachi	HD74HCT373	
	Micrel	MIC74HCT373	
	MicroTech	74HCTR373	
	Mitel	MD74HCT373	
	Motorola	MC74HCT373	
	National	MM74HCT373	
	Nitron	NC74HCT373	
	Plessey	MV74HCT373	
		MV74SC373	
	RCA	**CD74HCT373**	**1150**
	SPI	SP74HCT373	
	SGS	M74HCT373	
	Signetics	**74HCT373**	**1158**

(Continued)

Manufacturer Device	Replacement Source	Device	IC Master Page
G74SC373	SSS	SS74HCT373	
	Supertex	SI74HCT373	
	TI	SN74HCT373	
	Toshiba	**TC74HCT373**	**1363**
	Universal	US74HCT373	
	Zytrex	ZX74HCT373-2	
G74SC374	CTI	74HCT374	
	Hitachi	HD74HCT374	
	Micrel	MIC74HCT374	
	MicroTech	74HCTR374	
	Mitel	MD74HCT374	
	Motorola	MC74HCT374	
	National	MM74HCT374	
	Nitron	NC74HCT374	
	Plessey	MV74HCT374	
		MV74SC374	
	RCA	CD74HCT374	
	SPI	SP74HCT374	
	SGS	M74HCT374	
	Signetics	**74HCT374**	**1158**
	SSS	SS74HCT374	
	Supertex	SI74HCT374	
	TI	SN74HCT374	
	Toshiba	**TC74HCT374**	**1363**
	Universal	US74HCT374	
	Zytrex	ZX74HCT374-2	
G8860	Mitel	MT8860	
	Plessey	MB8860	
◆G8865	Mitel	MT8865	
	Mostek	MK8865	
	Plessey	MV8865	
G8870	Mitel	MT8870	
	Plessey	MV8870	
G8912B	**Harris**	**HC5512**	**3596**
	Intel	2912	
		ID2912	
	National	TP3040	
	Plessey	MV8912	
	SGS	M5912	
	TI	TCM2912B	

Harris Semiconductor

Manufacturer Device	Replacement Source	Device	IC Master Page
29C51C	Intel	29C51C	
76161	AMD	27S191	
		AM27S191	
	Fairchild	932511	
	Fujitsu	MB7138	
	Harris	HM76161	
	Hitachi	HN25169	
	MMI	**63S1681**	**4101,4103**
	Motorola	MCM76101	
	National	77S191	
		87S191	
		DM87S191	
	Raytheon	**29681**	**4134**
	Signetics	82S191	
		N82S191	**4167**
	TI	28S166	
		TBP28S166	
7649	AMD	27S29	
		LF157A	
	Fairchild	LF157A	
	MMI	5349-1	
		6349-1	
	National	545472	
		74S472	
		LF157A	
	PMI	PM157A	
	Raytheon	**29621**	**4134**
	Signetics	825147	
	TI	28S42	
76641	AMD	27S49	
		AM27S49	
	Cypress	CY7C264	
	Fairchild	32Z565	
		93565	
	Fujitsu	7144H	
		MB7144	
	Raytheon	**29VP864**	**4137**
	Signetics	82641	
7681	AMD	AM27S181M	
	Cypress	CY7C282M	
	Fairchild	932451	
		93451	
	Fujitsu	MB7132	
	Hitachi	HN25089	
	MMI	5381-1	
		6381	**4102**
		6381-1	
	Motorola	**MCM7681**	**4124**

(Continued)

Manufacturer Device	Replacement Source	Device	IC Master Page
7681	National	DM77S181	
		DM77S281	
		DM87S281	
	Raytheon	29631AM	
		29632	
	Signetics	82S181	
		NS82HS195	
		S82HS181	
		S82S181	
	TI	28S86	
		TBP28S86AM	
80C86	Intel	80C86	
80C88	Intel	80C88	
82C37A	AMD	AM8237A	
		AM9517A-4	
	Intel	8237A-4	
	Nitron	NC72C37A	
82C51	Intel	82C51	
	NEC	μPD71051	
	OKI	82C51	
82C54	Harris	CP82C54	
	Intel	8254	
		82C54	
	NEC	UPD71054	
	Nitron	NC82C54	
	OKI	82C54	
	S-MOS	SMC82C54AC	
82C55	Harris	CP82C55A	
	Intel	8255	
		82C55	
		P8255	
	NEC	UPD71055	
		UPD8255A	
	OKI	82C55	
		MSM82C55A	**4732**
	S-MOS	SMC82C55AC	
	Toshiba	TMP8255	
		TMP82C55	**1750**
82C55A	Intel	82C55A	
	Nitron	NC82C55A	
82C57	Intel	82C57	
	NEC	μPD71057	
	OKI	82C57	
82C59A	AMD	D8259	
	Fujitsu	MBL8259	
	Harris	CP82C59A	
	Intel	8259	
		82C59A	
	National	INS8259	
	NEC	UPD8259A/A-2	
	Nitron	NC82C59A	
	OKI	**MSM82C59A**	**4732**
	S-MOS	SMC82C59AC	
	Toshiba	TMP8259	
82C82	**Fujitsu**	**MBL8282**	**1611**
	Intel	8282	
		82C82	
	NEC	UPD71082	
		μPB8282	
	Nitron	NC82C82	
	OKI	82C82	
82C83	Intel	82C83	
	NEC	UPD71083	
	Nitron	NC82C83	
	OKI	82C83	
82C84	AMD	8284	
	Fujitsu	MBL8284	
	Harris	**82C84A**	**682,1619,1623,1631**
	Intel	8284	
		82C84	
		82C84A	
	NEC	UPD71084	
		μPB8284	
	Nitron	NC82C84A	
82C84A	AMD	8284	
	Fujitsu	MBL8284	
	Harris	82C84	
	Intel	8284	
		82C84	
		82C84A	
	NEC	UPD71084	
		μPB8284	
	Nitron	NC82C84A	
82C86	AMD	8304	
		DP8304	
	Fujitsu	**MBL8286**	**1611**
	Intel	8286	
		82C86	
	National	DP8304	
	NEC	μPB8286	
		μPD71086	

(Continued)

Manufacturer Device	Replacement Source	Device	IC Master Page
82C86	Nitron	NC82C86	
	OKI	82C86	
82C87	AMD	8287	
	Intel	8287	
		82C87	
	NEC	UPS71087	
		μPD8287	
	Nitron	NC82C87	
	OKI	82C87	
82C88	AMD	8288	
	Fujitsu	**MBL8288**	**1611**
	Intel	8288	
		82C88	
	NEC	UPD71088	
		μPB8288	
	Nitron	NC82C88	
	OKI	82C88	
82C89	**Fujitsu**	**MBL8289**	**1611**
	Intel	8289	
	NEC	UPB8289	
	Nitron	NC82C89	
CM1458	Fairchild	UA1458HC	
	Harris	HA5102	
	MicroPwr	MPOP14	
	Motorola	**MC1458**	**3617**
	National	LF412	
	NEC	MPC251	
	PMI	OP14	
	RCA	**CA1458**	**3672**
	SGS	MC1458	
	Signetics	**SA1458**	**3729**
	ThomsonCSF	μA1458	
	Samsung	**MC1458**	**3679**
		MC4558	**3679**
CP82C54	**Harris**	**82C54**	**682,1619,1620,1631**
	Intel	8254	
		82C54	
	NEC	UPD71054	
	Nitron	NC82C54	
	OKI	82C54	
	S-MOS	SMC82C54AC	
CP82C55A	Harris	82C55	
	Intel	8255	
		82C55	
		P8255	
	NEC	UPD71055	
		UPD8255A	
	OKI	82C55	
		MSM82C55A	**4732**
	S-MOS	SMC82C55AC	
	Toshiba	TMP8255	
		TMP82C55	**1750**
CP82C59A	AMD	D8259	
	Fujitsu	MBL8259	
	Harris	**82C59A**	**682,1619,1621,1631**
	Intel	8259	
		82C59A	
	National	INS8259	
	NEC	UPD8259A/A-2	
	Nitron	NC82C59A	
	OKI	**MSM82C59A**	**4732**
	S-MOS	SMC82C59AC	
	Toshiba	TMP8259	
HA-23080	**RCA**	**CA3080**	**3674**
HA-2425	AD	AD583	
	Datel	**SHM-IC-1**	**3163**
	PMI	SMP-10	
		SMP-11	
	TeledyneP	4856	
HA-2500	**Elantec**	**EHA2500**	**3538**
HA-2502	Datel	AM-450-2M	
	Elantec	**EHA2502**	**3538**
HA-2505	AD	AD540	
	Datel	**AM-450-2**	**3163**
	Elantec	**EHA2505**	**3538**
HA-2510	**Elantec**	**EHA2510**	**3538**
HA-2512	**Elantec**	**EHA2512**	**3538**
HA-2515	**Elantec**	**EHA2515**	**3538**
HA-2520	**Elantec**	**EHA2520**	**3538**
HA-2522	Datel	AM-452-2M	
	Elantec	**EHA2522**	**3538**
HA-2525	**Elantec**	**EHA2525**	**3538**
HA-2539	**Signetics**	**NE5539**	**3710,3729**
	TeledyneP	1342	
HA-2540	TeledyneP	1341	
HA-2600	**Elantec**	**EHA2600**	**3538**
	Fairchild	μA741	
	Motorola	**MC1556**	**3616**
	TeledyneP	1326	
	TI	MC1556	

◆ Discontinued

Bold face device numbers indicate manufacturers data is provided in the IC Master on the pages noted.

ALTERNATE SOURCE DIRECTORY

Harris Semiconductor (Cont'd)

Manufacturer Device	Replacement Source	Device	IC Master Page
HA-2602	Datel	AM-460-2M	
	Elantec	**EHA2602**	**3538**
HA-2605	**Datel**	**AM-460-2**	**3163**
	Elantec	**EHA2605**	**3538**
	Motorola	**MC1456**	**3616**
	TI	MC1456	
HA-2620	AD	AD507	
	Burr-Brown	3508	
	Datel	AM-462-1	
		AM-462-2	
	Elantec	**EHA2620**	**3538**
		EHA2622	**3538**
		EHA2625	**3538**
	Harris	HA-2622	
		HA-2625	
	Intersil	A561	
HA-2622	AD	AD507	
	Burr-Brown	3508	
	Datel	AM-462-1	
		AM-462-2	
	Elantec	**EHA2620**	**3538**
		EHA2622	**3538**
		EHA2625	**3538**
	Harris	HA-2620	
		HA-2625	
	Intersil	A561	
HA-2625	AD	AD507	
	Burr-Brown	3508	
	Datel	AM-462-1	
		AM-462-2	
	Elantec	**EHA2620**	**3538**
		EHA2622	**3538**
		EHA2625	**3538**
	Harris	HA-2620	
		HA-2622	
	Intersil	A561	
HA-2640	Datel	AM-464-2M	
	Exar	XR1527A	
	Harris	LM143	
	Motorola	**MC1536**	**3616**
	National	LM143	
		LM1536	
	SiliconG	SG143	
		SG1536	
HA-2645	Datel	AM-464-2	
	Harris	LM343	
	Motorola	**MC1436**	**3616**
		MC1439	**3615**
	National	LM1436	
		LM343	
	SiliconG	SG1436	
		SG343	
	TeledyneP	1332	
◆HA-2700	Datel	AM-470-2	
		AM-470-2C	
		AM-470-2M	
	TeledyneP	1323	
◆HA-2704	Datel	AM-470-2	
		AM-470-2C	
		AM-470-2M	
	TeledyneP	1323	
◆HA-2705	Datel	AM-470-2	
		AM-470-2C	
		AM-470-2M	
	TeledyneP	1323	
HA-2720	Intersil	ICL7611	
		ICL8021	
		LM4250	
	Maxim	ICL7611	
	Motorola	**MC1776**	**3616**
	National	LF441	
		LM4250	
	PMI	OP20	
		OP21	
		OP22	
	SGS	MC1776	
	Solitron	UC4250	
	TI	TLC251	
		TLC271	
	ThomsonCSF	µA776	
HA-5033	**Elantec**	**EL2004**	**3537,3540**
		EL2005	**3537,3541**
		ELH0033	**3537**
	Maxim	LH0033	
	Micra	MC0033	
	National	LH0033	
	TeledyneC	LH0033	
	TeledyneP	1359	
HA-5100	Datel	AM-410-2M	
HA-5105	Datel	AM-410-2	
HA-5110	Datel	AM-411-2M	
HA-5115	Datel	AM-411-2	
HA-5160	TeledyneP	1344	
HA-5162	TeledyneP	1345	
HA-5180	TeledyneP	1346	
HA-5180A	TeledyneP	1347	
HA-5190	TeledyneP	1343	
HA-5195	TeledyneP	1343	
HA-5320	Burr-Brown	SHC5320	
	Datel	SHM-20	
	TeledyneP	4866	
HA-5320-2	**Datel**	**SHM-20M**	**3159,3163**
HA-5320-5	**Datel**	**SHM-20C**	**3159,3163**
HA-OP07	AD	AD517	
		OP-07	
	Fairchild	UA714	
	Harris	HA5130	
		HA5135	
	LinearTech	OP-07	
	Micra	MC0021	
	MicroPwr	MPOP07	
	NEC	UPC264	
	PMI	OP07	
	Raytheon	OP07	
	TI	OP07D	
HAOP27	AD	AD510	
		AD517	
	Burr-Brown	OPA27	
	LinearTech	OP27	
		LT1007	
	PMI	OP27	
	Raytheon	OP27	
		RC714	**3666**
HAOP37	Burr-Brown	OPA37	
	LinearTech	OP37	
		LT1037	
	PMI	OP37	
	Raytheon	OP37	
HA1608	AD	AD581	
	LinearTech	LTREF01	
		REF-01A	
	Maxim	REF01	
	MicroPwr	MP5531	
		MPREF01	
	Motorola	MC1400AG10	
		MC1400AU10	
		MC1500AU10	
	PMI	REF-01AZ	
		REF01	
	Raytheon	**REF-01**	**3652**
		REF01	
	TeledyneS	TSC9495	
HA2520	AD	AD509	
	Burr-Brown	3507	
	TeledyneP	1322	
HA2525	Burr-Brown	3507	
	Datel	AM452	
	Intronics	A560	
HA2541	**Elantec**	**EL2006**	**3537,3542**
		ELH0032	**3537**
	Micra	MC0032	
	National	LH0032	
	TeledyneC	LH0032	
	TeledyneP	0032	
HA2740	Exar	XR346	
	National	LM346	
	ThomsonCSF	LM346	
HA5082	AnalogSys	MA336	
	Fairchild	UA772	
	Motorola	**MC34002**	**3617**
	NEC	UPC4082	
	TI	TL072	
		TL082C	
HA5084	**Motorola**	**MC35004**	**3618**
	TI	**TL084M**	**719**
HA5102	Fairchild	UA1458HC	
	Harris	CM1458	
	MicroPwr	MPOP14	
	Motorola	**MC1458**	**3617**
	National	LF412	
	NEC	MPC251	
	PMI	OP14	
	RCA	**CA1458**	**3672**
	SGS	MC1458	
	Signetics	**SA1458**	**3729**
	ThomsonCSF	µA1458	
	Samsung	**MC1458**	**3679**
		MC4558	**3679**
HA5130	AD	AD517	
		OP-07	
	Fairchild	UA714	
	Harris	HA-OP07	
		HA5135	
	LinearTech	OP-07	
	Micra	MC0021	
	MicroPwr	MPOP07	
	NEC	UPC264	
	PMI	OP07	
	Raytheon	OP07	
	TI	OP07D	
HA5135	AD	AD517	
		OP-07	
	Fairchild	UA714	
	Harris	HA-OP07	
		HA5130	
	LinearTech	OP-07	
	Micra	MC0021	
	MicroPwr	MPOP07	
	NEC	UPC264	
	PMI	OP07	
	Raytheon	OP07	
	TI	OP07D	
HA5170	AD	AD547	
	Burr-Brown	OPA1100	
	National	LH0052	
	PMI	OP41	
HA5280	Burr-Brown	3522	
HA5320	TeledyneP	4866	
HC5510	Intel	2910A	
	TI	TCM2910A	
HC5511	Intel	2911	
	TI	TMC2911A	
HC5512	GTEMicro	G8912B	
	Intel	2912	
		ID2912	
	National	TP3040	
	Plessey	MV8912	
	SGS	M5912	
	TI	TCM2912B	
HC5554	**Fairchild**	**µA3054**	**3575**
	National	TP3054	
	Sierra	SC11301	
	Sprague	ULN-3054	
HC5557	**Fairchild**	**µA3057**	**3575**
	National	TP3057	
	Sierra	SC11302	
HD4702	Fairchild	F4702	
HF-10	Maxim	MF10	
HI-1818A	**Datel**	**MVD-409**	**3163**
	Harris	HI1828A	
HI-518	Burr-Brown	MPC801	
HI1818A	AD	AD7503	
	Datel	**MV-808**	**3163**
	HybridSys	MUX201	
	MicroPwr	MP7503	
HI1828A	AD	AD7502	
	Datel	MVD409	
	MicroPwr	MP7502	
	National	CD4052	
	Solitron	CM4052	
	SSS	SCL4052	
	Toshiba	TC4052	
◆HI1840	**Burr-Brown**	**MPC16S**	**3149**
	Datel	**MV-1606**	**3163**
		MX-1606	**3163**
	Harris	HI506	
	Intersil	IH6116	
	MicroPwr	MP7506	
	PMI	MUX-16	
	Siliconix	DG506A	
HI200	AD	ADG200	
	Intersil	**DG200**	**3196**
		IH200	
		IH5200	**3196**
	MicroPwr	MP200	
	PMI	SW05	
	Siliconix	DG200A	
HI201	AD	ADG201	
	Intersil	DG201	
		IH201	
		IH5201	
	MicroPwr	MP201	
	National	LF11201	
		LF13201	
	PMI	SW201	
	Siliconix	DG201A	
HI300	Siliconix	DG300A	
HI301	Siliconix	DG301A	
HI302	**MicroPwr**	**MP302**	**3207,3605**
	Siliconix	DG302A	
HI303	**MicroPwr**	**MP303**	**3207,3605**
	Siliconix	DG303A	
HI304	Siliconix	DG304A	
HI305	Siliconix	DG305A	
HI306	Siliconix	DG306A	
HI307	Siliconix	DG307A	
HI381	Harris	HI5048	
	Intersil	DG181	
		IH5048	
	Siliconix	DG181	
		DG381A	
HI384	Harris	HI5049	
	Intersil	DG184	
		IH5049	
	Siliconix	DG184	
		DG384A	
HI387	Harris	HI5050	
	Intersil	DG187	
		IH5050	
	Siliconix	DG187	
		DG387A	
HI390	Siliconix	DG390A	
HI5040	Intersil	IH5040	
	Siliconix	DG5040	
HI5041	Intersil	IH5041	
	Siliconix	DG5041	
HI5042	Intersil	DG188	
		IH5042	
	Siliconix	DG188	
		DG5042	
HI5043	Intersil	DG191	
		IH5043	
	Siliconix	DG191	
		DG243	
		DG5043	
HI5044	Intersil	IH5044	
	Siliconix	DG5044	
HI5045	Intersil	DG185	
		IH5045	
	Siliconix	DG185	
		DG5045	
	TI	TL185	
HI5046	Intersil	IH5046	
HI5047	Intersil	IH5047	
HI5048	Harris	HI381	
	Intersil	DG181	
		IH5048	
	Siliconix	DG181	
		DG381A	
HI5049	Harris	HI384	
	Intersil	DG184	
		IH5049	
	Siliconix	DG184	
		DG384A	
HI5050	Harris	HI387	
	Intersil	DG187	
		IH5050	
	Siliconix	DG187	
		DG387A	
HI5051	Intersil	DG190	
		IH5051	
	Siliconix	DG190	
HI506	**Burr-Brown**	**MPC16S**	**3149**
	Datel	**MV-1606**	**3163**
		MX-1606	**3163**
	Intersil	IH6116	
	MicroPwr	MP7506	
	PMI	MUX-16	
	Siliconix	DG506A	
HI506A	**Burr-Brown**	**MPC16S**	**3149**
	Datel	MX1606	
	TeledyneP	4552	
HI507	AD	AD7507	
	Burr-Brown	**MPC8D**	**3149**
	Datel	**MVD-807**	**3163**
		MXD-807	**3163**
	Intersil	IH6216	
	MicroPwr	MP7507	
	PMI	MUX-28	
	Siliconix	DG507A	
	TeledyneP	4551	
HI507A	**Burr-Brown**	**MPC8D**	**3149**
	Datel	MXD807	
	TeledyneP	4551	
HI508	AD	AD7501	
	Burr-Brown	**MPC8S**	**3149**
	Datel	MUX808	
		MX-808	**3163**
	Intersil	IH6108	
	MicroPwr	MP7501	
		MP7508	
	National	LF11508	

(Continued)

◆ Discontinued

The manufacturers report their devices can be used as direct replacements.
Performance details often differ, so compare the specifications considering your requirements.

Harris Semiconductor (Cont'd)

Manufacturer Device	Replacement Source	Device	IC Master Page
HI508	National	LF13508	
	PMI	DMX-88	
		MUX-08	
		MUX-88	
	Siliconix	DG508A	
	TeledyneP	4554	
HI508A	**Burr-Brown**	**MPC8S**	**3149**
	Datel	**MX-808**	**3163**
	Intersil	IH-5108	
HI509	**Burr-Brown**	**MPC4D**	**3149**
	Intersil	IH6208	
	MicroPwr	MP7509	
		MP7509DI	
	National	LF11509	
		LF13509	
	PMI	MUX-24	
	Siliconix	DG509A	
	TeledyneP	4553	
HI509A	**Burr-Brown**	**MPC4D**	**3149**
	Burr-Brown	**MPC4D**	**3149**
	Intersil	IH5208	
	TeledyneP	4553	
HI516	Burr-Brown	MPC800	
	Datel	**MX-1616**	**3159,3163**
HI562A	AD	AD562	
	Datel	DAC562	
	MicroPwr	MP562	
	PMI	**PM562**	**3637**
HI565A	AD	AD565	
		AD565A	
	Fairchild	UA565	
	MicroNet	MN565A	
	Motorola	MC3412	
	TeledyneP	TP565A	
HI5685	AD	ADDAC80	
		ADDAC85	
		DAC80	
	Burr-Brown	DAC80	
		DAC800	
		DAC85	
		DAC850	
	Datel	DAC-85	
		DAC-85C	
		DAC-HZ12B	
	HybridSys	DAC9356	
		HSDAC80	
	MicroNet	**DAC80**	**3204**
		DAC85	
	National	DAC1280	
		DAC1285	
	TeledyneP	TPDAC80	
HI5687	AD	ADDAC87	
	Burr-Brown	DAC851	
		DAC87	
	Datel	DAC-687	
		DAC-87	
	HybridSys	DAC335	
		HSDAC87	
	MicroNet	MNDAC87	
HI574A	AD	AD574	
	Burr-Brown	ADC574A	
	Datel	ADC574A	
	HybridSys	HS574	
	MCE	MCE574	
	MicroNet	**MN574A**	**3203**
	MicroPwr	MP574	
	TeledyneP	TP574A	
HI674A	Burr-Brown	ADC674A	
HI7541	AD	AD7541	
	Datel	**DAC-7541**	**3162**
	HybridSys	DAC331	
		HS7541	
	Intersil	AD7541	
		ICL7541	
	MicroPwr	MP7541	
		MP7621	
	National	AD7521	
	Siliconix	SI7541	
	TeledyneP	TP7541	
HM6116	AMD	AM9128	
		AM9218	
	Cypress	CY7C128	
	Fujitsu	MB8128	
		MB8416	
	Harris	HM6516	
	IDT	IDT6116	
	Intel	2128	
	MicroPwr	MP6116	
HM6116	Mitsubishi	M58275	
		M5M116	
		M5M5116	
		M5M5117	
		M5M5118	
		MS8725	
	Motorola	MCM2016	
		MCM2016H	
		MCM2128	
		MCM6116	**4119**
		MCM61L16	**4119**
		MCM65116	
	National	MMC2116	
	NEC	µPD4016	
	OKI	MSM2128	
		MSM5128	**4732,4733**
	RCA	MWS6116A	
	SSS	883C21C16	
		BCM21C16	
		SCM21C16	
		SCM6116	
	TI	TMS4016	
	ThomsonCSF	ET2128	
	Toshiba	**TC5516A**	**4263**
		TMM2015A	
		TMM2016	
		TMM2016A	**4263**
	Samsung	KM6816	
	UMC	UM2128	
	Universal	US574HC133	
◆HM6402	Fairchild	F6850	
	GouldAMI	S1602	
	Hitachi	HD6850	
	Motorola	**MC6850**	**1663**
	ThomsonCSF	EF6850	
◆HM6503	Rockwell	R6503	
	Synertek	SY6503	
HM6504	GouldAMI	6504	
	Hitachi	4315	
		6147	
	Mitsubishi	58981	
	Motorola	6504	
	National	NMC6504	
	OKI	5104	
	RCA	CDM5104	
	Rockwell	R6504	
	Synertek	SY6504	
	Toshiba	TC5504	
HM6508	Fujitsu	8401	
	GouldAMI	6508	
	Intersil	6508	
		IM6508-1	
	MicroPwr	6508	
	National	6508	
		74C929	
	NEC	443	
	RCA	6508	
	Toshiba	5508	
HM6514	Hitachi	6148	
		HM4334	
	Mitsubishi	58981	
	Motorola	6514	
	NEC	444	
	OKI	5114	
	RCA	MWS5514	
	Rockwell	R6514	
	Synertek	SY6514	
	Toshiba	TC5514	
HM6516	AMD	AM9128	
		AM9218	
	Cypress	CY7C128	
	Fujitsu	MB8128	
		MB8416	
	Harris	HM6116	
	IDT	IDT6116	
	Intel	2128	
	MicroPwr	MP6116	
	Mitsubishi	M58275	
		M5M116	
		M5M5116	
		M5M5117	
		M5M5118	
		MS8725	
	Motorola	MCM2016	
		MCM2016H	
		MCM2128	
		MCM6116	**4119**
		MCM61L16	**4119**
		MCM65116	
	National	MMC2116	
	NEC	µPD4016	
HM6516	OKI	MSM2128	
		MSM5128	**4732,4733**
	RCA	MWS6116A	
	SSS	883C21C16	
		BCM21C16	
		SCM21C16	
		SCM6116	
	TI	TMS4016	
	ThomsonCSF	ET2128	
	Toshiba	**TC5516A**	**4263**
		TMM2015A	
		TMM2016	
		TMM2016A	**4263**
	Samsung	KM6816	
	UMC	UM2128	
	Universal	US574HC133	
HM65162	Fujitsu	MB8416	
	IDT	6116	
		IDT6116	
	Mitsubishi	5117	
	Mostek	MK6116	
	National	6116	
	NEC	µPD446	
	Nitron	NC6116	
	OKI	**MSM5128**	**4732,4733**
	RCA	CDM6116	
	S-MOS	SRM2016	
	Toshiba	**TC5517A**	**4263**
		TC5517B	
HM6518	GouldAMI	6518	
	MicroPwr	6518	
	Motorola	6518	
	National	MM74C930	
HM65262	AMD	AM2167	
	Cypress	CY7C167	
	Fujitsu	MB8167A	
		MB81C67	
	Hitachi	HM6167	
		HM6167H	
		HM6267	
	Inmos	IMS1400	
		IMS1403	**4042**
	IDT	IDT6167	
	Intel	51C67	
	Mitsubishi	M5M2167	
	Motorola	MCM2167H	
	NEC	UPD2167	
◆HM65642	AMD	AM9988	
		AM9988C	
	Cypress	CY7C186	
	Fujitsu	MB8464	
		MB8464A	
	Hitachi	HM6264	
		HM6464	
	IDT	IDT7188	
		IDT7M864	
	Mitsubishi	M5M5165	
	Motorola	MCM6164	
	NEC	µPD4364	
		µPD4464	
	OKI	MSM5164	
		MSM5165	
	RCA	CDM6264	
	S-MOS	SRM2064	
		SRM2264	**4177,4178**
	Sharp	LH5164	
	Toshiba	TC5564	
		TC5565	
		TMM2063	
		TMM2064	
	Samsung	KM6264	
HM6616	EXEL	XL46C16	
	Fairchild	932511M	
	Fujitsu	MB7138E	
	Harris	HM76161	
	Hitachi	HN25169S	
	MMI	**53S1681**	**4101**
	Motorola	**MCM76161**	**4124**
	National	DM77S191	
		DM77S191A	
		DM77S291	
		DM77S291A	
	Raytheon	**29681**	**4134**
		29681A	**4134**
		29683	**4134**
		29683A	**4134**
	ThomsonCSF	SFC71191A	
HM7602	AMD	AM27S18	
	Fujitsu	MB7111	
HM7602	**MMI**	**6330**	**4102**
	National	DM74S188	
	Signetics	**N82S23**	**4166**
	TI	TBP18SA30	
◆HM7603	AMD	AM27LS19	
		AM27S19	
	Fujitsu	MB7112	
	MMI	5331-1	
		53S081	**4101**
		6331-1	
		63S081	**4101,4102**
	Motorola	MCM27S19	
	National	DM74S288	
		DM8578	
	Signetics	**N82S123**	**4166**
		S82S123	
	TI	**TBP18S030**	**729**
◆HM7608	Signetics	N82S2708	
		S82S2708	
	TI	TBP28S2708A	
◆HM7610	AMD	AM27S20	
	Fujitsu	MB7113	
	MMI	6300-1	
		63S140	**4101,4102**
	National	DM74S387	
	Signetics	**N82S126**	**4166**
	TI	TBP24SA10	
◆HM7610-2	MMI	5300-1	
		53S140	**4101**
	National	DM54S387	
	Signetics	S82S126	
	TI	TBP24SA10M	
◆HM7611	AMD	27521	
		AM27S11	
		AM27S21	
	Fujitsu	MB7114	
	MMI	6301-1	
		63S141	**4101,4102**
	National	DM74S287	
	Signetics	**N82S129**	**4166**
	TI	**TBP24S10**	**729**
◆HM7611-2	MMI	5301-1	
		53S141	**4101**
	National	DM54S287	
	Signetics	S82S129	
HM76161	EXEL	XL46C16	
	Fairchild	932511M	
	Fujitsu	MB7138E	
	Harris	HM6616	
	Hitachi	HN25169S	
	MMI	**53S1681**	**4101**
	Motorola	**MCM76161**	**4124**
	National	DM77S191	
		DM77S191A	
		DM77S291	
		DM77S291A	
	Raytheon	**29681**	**4134**
		29681A	**4134**
		29683	**4134**
		29683A	**4134**
	ThomsonCSF	SFC71191A	
◆HM76164	AMD	AM27S40	
	Fujitsu	MB7151	
◆HM76165	AMD	AM27541	
		AM27S41	
	Fujitsu	MB7134	
		MB7152	
	MMI	**53S1641**	**4101**
		63S1641	**4101,4103**
	Motorola	**MCM76161**	**4124**
	National	DM77S195	
		DM87S195	
	Signetics	NS82HS195	
		NS82S195	
◆HM7620	AMD	AM27S12	
	Fujitsu	MB7115	
	MMI	6305-1	
		63S240	**4101,4102**
	National	DM74S570	
	Signetics	**N82S130**	**4166**
HM7621	AMD	AM27S13	
	Fujitsu	MB7116	
	MMI	6306-1	
		63S241	**4101,4102**
	Motorola	**MCM7621**	**4124**
	National	DM74S571	
	Signetics	**N82S131**	**4166**
◆HM76321	AMD	27S43	
		AM27S43	
	Fujitsu	MB7142	
	MMI	**53S3281**	**691,4101**

(Continued)

◆ Discontinued

Bold face device numbers indicate manufacturers data is provided in the IC Master on the pages noted.

Harris Semiconductor (Cont'd)

Manufacturer Device	Replacement Source	Device	IC Master Page
◆HM76321	**MMI**	**63S3281**	**4101,4103**
	National	77S321	
		87S321	
		DM87S321	
	Raytheon	**29671**	**4134**
	Signetics	82S321	
		N82S321	**4167**
◆HM7640	AMD	AM27S30	
	MMI	6340-1	
	National	DM74S475	
		DM77S475	
		DM87S475	
	Signetics	N82S140	
	TI	TBP28SA46	
◆HM7641	AMD	AM27S31	
	MMI	6341-1	
	Motorola	**MCM7641**	**4124**
	National	DM74S474	
	Signetics	N82S141	
	TI	TBP28S46	
◆HM7642-2	AMD	AM27S32	
	Fairchild	93452	
	Fujitsu	MB7121	
	Hitachi	HN25044	
	MMI	5352-1	
		6352	**4102**
	National	DM54S572	
	Signetics	S82S136	
	TI	TBP24SA41M	
◆HM7643	AMD	AM27S33	
	Fairchild	93453	
	Fujitsu	MB7122	
	Hitachi	HN25045	
	MMI	5353-1	
		535441	
		6353-1	
		63S441	**4101,4102**
		G35441	
	Motorola	**MCM7643**	**4124**
	National	DM74S573	
	NEC	UPB426	
	Signetics	N72HS137	
		N825137	
		N82S137	**4166**
		S82S195	
	TI	TBP24S41	
◆HM7643-2	AMD	AM27S33M	
	MMI	**53S441**	**4101**
	Motorola	MCM7643M	
	National	DM54S573	
		DM54S573A	
	Signetics	S82HS137	
		S82S137	
		S82S195	
	TI	TBP24S41M	
◆HM7643A	AMD	AM27S33	
	Fairchild	93453	
	Fujitsu	MB7122	
	Hitachi	HN25045	
	MMI	5353-1	
		535441	
		6353-1	
		63S441	**4101,4102**
		G35441	
	Motorola	**MCM7643**	**4124**
	National	DM74S573	
	NEC	UPB426	
	Signetics	N72HS137	
		N825137	
		N82S137	**4166**
		S82S195	
	TI	TBP24S41	
◆HM7647R	AMD	AM27S15	
	Signetics	**N82S115**	**4166**
◆HM7648	AMD	AM27S28	
	Fujitsu	MB7123	
	MMI	6348-1	
	National	DM74S473	
	Signetics	N82S146	
	TI	TBP28SA42	
◆HM7649	AMD	AM27S29	
	Fujitsu	MB7124	
	MMI	6349-2	
	National	DM54S472	
		DM74S472	
	Raytheon	**29623**	**4134**
	Signetics	N82S147	
◆HM76641	**Xicor**	**X2664**	**4280**
◆HM7680	AMD	AM27S180	
	Fujitsu	MB7131	
	MMI	6380-1	
	National	DM87S180	
		DM87S229	
	Signetics	N82S180	
	TI	TBP28SA86A	
◆HM7681-2	AMD	AM27S181M	
	Cypress	CY7C282M	
	Fairchild	932451	
		93451	
	Fujitsu	MB7132	
	Harris	7681	
	Hitachi	HN25089	
	MMI	5381-1	
		6381	**4102**
		6381-1	
	Motorola	**MCM7681**	**4124**
	National	DM77S181	
		DM77S281	
		DM87S281	
	Raytheon	29631AM	
		29632	
	Signetics	82S181	
		NS82HS195	
		S82HS181	
		S82S181	
	TI	28S86	
		TBP28S86AM	
◆HM7684	AMD	AM27S184	
	Fujitsu	MB7127	
	Hitachi	HM25045	
	MMI	6388	
		6388-1	
	National	DM87S184	
	Signetics	N82S184	
	TI	TBP24SA81	
◆HM7685	AMD	27S185	
		AM27S185	
	Fujitsu	MB7128	
	Hitachi	HN25085	
	MMI	5389	
		6389	**4102**
		6389-1	
		63S841	**4101,4102**
	Motorola	**MCM7685**	**4124**
	National	77S185	
		87S185	
		DM87S185	
	Raytheon	29651	
		29651A	**4134**
	Signetics	82S185	
		N82HS185	
		N82S185	**4166**
	TI	24S81	
		TBP24S81	
◆HM7685-2	MMI	5389	
		5389-1	
	National	DM77S185	
	Raytheon	29651AM	
	Signetics	S82HS185	
		S82S185	
	TI	TBP24S81M	
◆HM7686	National	DM87S186	
◆HM7687	National	DM87S187	
HS81C55	AMD	8155	
	Intel	8155	
	NEC	μPD8155	
	Toshiba	**TMP8155**	**1750**
HS81C56	AMD	8156	
	Intel	8156	
	NEC	μPD8156	
LF147	National	LF147	
LF153	National	LF153	
LF247	National	LF247	
LF253	National	LF253	
LF353	Burr-Brown	0P37	
LM108	AD	AD108	
	Fairchild	μA108	
	Intersil	**LM108**	**3600,3601**
	LinearTech	LM108	
	MicroPwr	**MP108**	**688,3607**
	Motorola	**LM108**	**3615**
	National	LM108	
	PMI	PM108	
	SGS	M108	
	SiliconSys	**SSI108**	**3736**
	TI	LM108	
LM108A	AMD	LM108A	
	AD	AD108A	
	Fairchild	UA108A	
	LinearTech	LM108A	
			(Continued)
LM108A	**MicroPwr**	**MP108A**	**688,3607**
	Motorola	**LM108A**	**3615**
	PMI	PM108A	
LM118	LinearTech	LM118	
	National	LM118	
	TI	LM118	
LM143	Datel	AM-464-2M	
	Exar	XR1527A	
	Harris	HA-2640	
	Motorola	**MC1536**	**3616**
	National	LM143	
		LM1536	
	SiliconG	SG143	
		SG1536	
LM308A	AMD	LM308A	
	AD	AD308A	
	Fairchild	UA308A	
	LinearTech	LM308A	
	MicroPwr	**MP308A**	**3607**
	Motorola	**LM308A**	**3615**
	National	LM308A	
LM318	AD	AD518	
	LinearTech	LM318	
	National	LM318	
	NEC	μPC159	
	TI	LM318	
	ThomsonCSF	LM318	
		TDB0118	
LM343	Datel	AM-464-2	
	Harris	HA-2645	
	Motorola	**MC1436**	**3616**
		MC1439	**3615**
	National	LM1436	
		LM343	
	SiliconG	SG1436	
		SG343	
	TeledyneP	1332	
MH6501	GouldAMI	S5101	
		S6501	
	Hitachi	HM435101	
	Intel	5101	
	Motorola	MCM5101	
		MCMS1L01	
	National	MM74C920	
	Panasonic	MNS101	
	RCA	**MWS5101**	**1673,1676**
	Sharp	LH5101	
	SSS	SCM5101	
	Synertek	SY2101	
	Toshiba	TC5501	

Hitachi America, Ltd.

Manufacturer Device	Replacement Source	Device	IC Master Page
100474	AMD	AM100474	
	Fairchild	F100474	
	Fujitsu	MBM100474	
		MBM100474A	
	Hitachi	HM100474	
	NEC	UPB100474	
	Signetics	100474	
4315	GouldAMI	6504	
	Harris	HM6504	
	Hitachi	6147	
	Mitsubishi	58981	
	Motorola	6504	
	National	NMC6504	
	OKI	5104	
	RCA	CDM5104	
	Rockwell	R6504	
	Synertek	SY6504	
	Toshiba	TC5504	
6147	GouldAMI	6504	
	Harris	HM6504	
	Hitachi	4315	
	Mitsubishi	58981	
	Motorola	6504	
	National	NMC6504	
	OKI	5104	
	RCA	CDM5104	
	Rockwell	R6504	
	Synertek	SY6504	
	Toshiba	TC5504	
6148	Harris	HM6514	
	Hitachi	HM4334	
	Mitsubishi	58981	
	Motorola	6514	
	NEC	444	
	OKI	5114	
	RCA	MWS5514	
	Rockwell	R6514	
			(Continued)
6148	Synertek	SY6514	
	Toshiba	TC5514	
HA1110	RCA	CA3001	
	SiliconG	SG3001	
HA1148	RCA	CA3217	
◆HA1156	Exar	XR1310	
	National	LM1310	
	TI	SN76115	
	Toshiba	TA7157	
HA1197	Sanyo	LA1240	
HA1199	Sprague	ULN-2249	
◆HA12402	Sprague	ULN-2204	
	Telefunken	TDA1083	
		U417B	
	Toshiba	TA7613	
HA1303	Fairchild	μA709	
	Motorola	**MC1709**	**3615**
	National	LM1709	
		LM709	
	NEC	μPC255	
		μPC55	
	RCA	**CA3038**	**3672**
	TI	μA709	
	ThomsonCSF	SFC2709	
	Toshiba	TA7502	
◆HA1364	RCA	CA1190	
	SGS	TDA1190	
		TDA1190Z	
		TDA3190	
	Sprague	ULN-2290	
HA17301	**Motorola**	**LM2900**	**3618**
		MC3301	**3618**
	National	LM2900	
		LM3301	
	Raytheon	LM2900	
		RC3301	
	TI	LM2900	
HA17408	AMD	AM1408	
		DAC-08	
		SSS1408	
	AD	AD1408	
		ADDAC-08	
	Datel	DAC-08B	
		DAC-I8BC	
		DAC-IC8B	
		DAC-IC8BC	**3162**
	Fairchild	DAC-08	
		MA0802M	
		μA0801	
		μA0802	
	Motorola	**DAC-08**	**3630**
		MC1408	
	National	DAC0801	
		DAC0802	
		DAC0806	
		DAC0807	
		DAC0808	
	NEC	μPC624	
	PMI	**DAC-08**	**3637,3639**
		DAC-1408	
	Raytheon	**DAC-08**	**3664**
	Signetics	MC1408	
HA17555	Exar	XR555	
	Fairchild	μA555	
	Intersil	NE555	
	Mitsubishi	M51841	
		M51848	
		M5251	
		M5E555	
	Motorola	MC1455	
	NEC	μPC1555	
	Raytheon	RC555	
	RCA	CA555	
	Sanyo	LB8555	
	SGS	NE555	
	Signetics	**NE555**	**3721**
		NE555N	
	TI	NE555	
	ThomsonCSF	LM555	
	Samsung	**NE555**	**3679**
HA17723	Fairchild	μA723	
	Intersil	LM723	
	Motorola	**MC1723**	**3625**
	National	LM723	
	Raytheon	RC723	
		RM723	
	RCA	CA723	
		LM723	
	SGS	L123	
		LM723	
	Signetics	**μA723**	**3721,3730**
	SiliconG	SG723	
			(Continued)

◆ Discontinued

The manufacturers report their devices can be used as direct replacements.
Performance details often differ, so compare the specifications considering your requirements.

Hitachi America, Ltd. (Cont'd)

Manufacturer Device	Replacement Source	Device	IC Master Page
HA17723	TI	µA723	
	ThomsonCSF	LM723	
HA17733	Fairchild	µA733	
	Intersil	µA733	
	Motorola	**MC1733**	**3616**
		NE592	
	National	LM733	
	Signetics	**µA733**	**3721,3729**
	TI	µA733	
HA17747	AMD	747	
	Fairchild	µA747	
	MicroPwr	MPOP04	
	Motorola	**MC1747**	**3617**
	National	LM747	
	NEC	µPC251	
	PMI	**OP-04**	**3636**
		PM747	
	Raytheon	RC747	
		RM747	
	RCA	**CA747**	**3672**
	Signetics	**µA747**	**3721**
	TeledyneS	747	
	TI	µA747	
HA17901	AMD	LM339A	
	Fairchild	µA339	
	Motorola	**LM339**	**3631**
	National	LM339	
	NEC	µPC339	
	PMI	CMP-04	
		PM339A	
	Raytheon	LM339	
	RCA	**CA339**	**3672,3677**
		CA339A	**3672,3677**
		LM339	
	SGS	LM339	
	TI	LM339	
	ThomsonCSF	LM339	
		TDB0139	
HA17902	Fairchild	µA2902	
	Motorola	**LM2902**	**3618**
	National	LM2902	
	NEC	µPC2902	
	Raytheon	LM2902	
	SGS	LM2902	
	TI	LM2902	
	ThomsonCSF	LM2902	
◆HA1902	Fairchild	75S24	
	Motorola	MC7524	
	National	DS75S24	
	Signetics	7524	
	TI	SN75224	
		SN7524	
HD100101	Fairchild	F100101	
HD100102	Fairchild	F100102	
HD100107	Fairchild	F100107	
HD100112	Fairchild	F100112	
	Signetics	**100112**	**1173,1174**
HD100114	Fairchild	F100114	
HD100117	Fairchild	F100117	
HD100118	Fairchild	F100118	
HD100122	Fairchild	F100122	
HD100123	Fairchild	F100123	
	Signetics	**100123**	**1173,1174**
◆HD100124	Fairchild	F100124	
HD100125	Fairchild	F100125	
HD100130	Fairchild	F100130	
HD100131	Fairchild	F100131	
	Signetics	**100131**	**1173,1174**
HD100136	Fairchild	F100136	
	Signetics	**100136**	**1173,1174**
HD100141	Fairchild	F100141	
	Signetics	**100141**	**1173,1174**
HD100142	Fairchild	F100142	
HD100145	Fairchild	F100145	
	Signetics	**100145**	**1173,1174**
HD100150	Fairchild	F100150	
	Signetics	**100150**	**1173,1174**
HD100151	Fairchild	F100151	
	Signetics	**100151**	**1173,1174**
HD100155	Fairchild	F100155	
HD100156	Fairchild	F100156	
HD100158	Fairchild	F100158	
HD100160	Fairchild	F100160	
HD100163	Fairchild	F100163	
HD100164	Fairchild	F100164	
	Signetics	**100164**	**1173,1174**
HD100165	Cypress	PAL20L8	
	Fairchild	F100165	
	MMI	PAL20L8	
	Signetics	**100165**	**1173,1174**
HD100166	Cypress	PAL20R8	
	Fairchild	F100166	
	MMI	PAL20R8	
HD100170	Cypress	PAL20R6	
	Fairchild	F100170	
	MMI	PAL20R6	
	Signetics	**100170**	**1173,1174**
HD100171	Fairchild	F100171	
	Signetics	**100171**	**1173,1174**
HD100179	Cypress	CY7C510	
	Fairchild	F100180	
	Hitachi	HD100180	
	Signetics	**100180**	**1173,1174**
	TRW-LSI	TMC2010	
HD100180	Cypress	CY7C510	
	Fairchild	F100180	
	Hitachi	HD100179	
	Signetics	**100180**	**1173,1174**
	TRW-LSI	TMC2010	
HD100181	Cypress	CY7C164	
	Fairchild	F100181	
	IDT	IDT7188	
	Signetics	**100181**	**1173,1174**
HD100182	Cypress	CY7C166	
	Fairchild	F100182	
	IDT	IDT7198	
HD100183	Cypress	CY7C161	
	Fairchild	F100183	
	IDT	IDT71981	
HD10101	Fairchild	F10101	
	Motorola	**MC10101**	**1123**
	Signetics	**10101**	**1173,1174**
HD10102	Fairchild	F10102	
	Motorola	**MC10102**	**1122**
	Signetics	**10102**	**1173,1174**
HD10104	Fairchild	F10104	
	Motorola	**MC10104**	**1122**
	Signetics	**10104**	**1173,1174**
HD10105	Fairchild	F10105	
	Motorola	**MC10105**	**1123**
	Signetics	**10105**	**1173,1174**
HD10106	Fairchild	F10106	
	Motorola	**MC10106**	**1123**
	Signetics	**10106**	**1173,1174**
HD10107	Fairchild	F10107	
	Motorola	**MC10107**	**1123**
	Signetics	**10107**	**1173,1174**
HD10109	Fairchild	F10109	
	Motorola	**MC10109**	**1123**
	Signetics	**10109**	**1173,1174**
HD10110	Fairchild	F10110	
	Motorola	**MC10110**	**1122**
	Signetics	**10110**	**1173,1174**
HD10111	Fairchild	F10111	
	Motorola	**MC10111**	**1123**
	Signetics	**10111**	**1173,1174**
HD10116	Fairchild	F10116	
	Motorola	**MC10116**	**1131**
	National	DM10116	
	Signetics	**10116**	**1173,1174**
HD10117	Fairchild	F10117	
	Motorola	**MC10117**	**1123**
	Signetics	**10117**	**1173,1174**
HD10118	Fairchild	F10118	
	Motorola	**MC10118**	**1123**
	Signetics	**10118**	**1173,1174**
HD10119	Fairchild	F10119	
	Motorola	**MC10119**	**1123**
	Signetics	**10119**	**1173,1174**
HD10121	Fairchild	F10121	
	Motorola	**MC10121**	**1123**
	Signetics	**10121**	**1173,1174**
HD10124	Fairchild	F10124	
	Motorola	**MC10124**	**1124**
	Signetics	**10124**	**1173,1174**
HD10125	Fairchild	F10125	
	Motorola	**MC10125**	**1124**
	Signetics	**10125**	**1173,1174**
HD10130	Fairchild	F10130	
	Motorola	**MC10130**	**1126**
	Signetics	**10130**	**1173,1174**
HD10131	Fairchild	F10131	
	Motorola	**MC10131**	**1126**
	Signetics	**10131**	**1173,1174**
HD10132	Fairchild	F10132	
	Motorola	**MC10132**	**1129**
	Signetics	**10132**	**1173,1174**
HD10133	Fairchild	F10133	
	Motorola	**MC10133**	**1126**
	Signetics	**10133**	**1173,1174**
HD10134	Fairchild	F10134	
	Motorola	**MC10134**	**1130**
	Signetics	**10134**	**1173,1174**
HD10136	Fairchild	F10136	
	Motorola	**MC10136**	**1127**
	Signetics	**10136**	**1173,1174**
HD10148	**Motorola**	**MCM10148**	**4123**
	Signetics	10148	
	TI	SN10148	
HD10160	Fairchild	F10160	
	Motorola	**MC10160**	**1132**
	Signetics	**10160**	**1173,1174**
HD10161	Fairchild	F10161	
	Motorola	**MC10161**	**1130**
	Signetics	**10161**	**1173,1174**
HD10162	Fairchild	F10162	
	Motorola	**MC10162**	**1130**
	Signetics	**10162**	**1173,1174**
HD10164	Fairchild	F10164	
	Motorola	**MC10164**	**1129**
	Signetics	**10164**	**1173,1174**
	TI	SN10164	
HD10165	Fairchild	F10165	
	Motorola	**MC10165**	**1131**
	Signetics	**10165**	**1173,1174**
HD10174	Fairchild	F10174	
	Motorola	**MC10174**	**1129**
	Signetics	**10174**	**1173,1174**
	TI	SN10174	
HD10175	Fairchild	F10175	
	Motorola	**MC10175**	**1126**
	Signetics	**10175**	**1173,1174**
HD10179	Fairchild	F10179	
	Motorola	**MC10179**	**1132**
	Signetics	**10179**	**1173,1174**
HD10180	Fairchild	F10180	
	Motorola	**MC10180**	**1132**
	Signetics	**10180**	**1173,1174**
HD10181	Fairchild	F10181	
	Motorola	**MC10181**	**1132**
	Signetics	**10181**	**1173,1174**
◆HD14001	Fairchild	F4001	
	Motorola	MC14001	
	National	CD4001	
		MM74C02	
	OKI	MSM4001	
	RCA	CD4001	
	Sanyo	LC4001B	
	SGS	HCC/HCF4001	
	Signetics	HEF4001	
	Solitron	CM4001	
	SSS	SCL4001	
	Toshiba	TC4001	
◆HD14002	Fairchild	F4002	
	Motorola	MC14002	
	National	CD4002	
	RCA	CD4002	
	SGS	HCC/HCF4002	
	Signetics	HEF4002	
	Solitron	CM4002	
	SSS	SCL4002	
	Toshiba	TC4002	
◆HD14006	Fairchild	F4006	
	National	CD4006	
	RCA	CD4006	
	SGS	HCC/HCF4006	
	Signetics	HEF4006	
	Solitron	CM4006	
	SSS	SCL4006	
	Toshiba	TC4006	
◆HD14007	Fairchild	F4007	
	Motorola	MC14007	
	National	CD4007	
	RCA	CD4007	
	SGS	HCC/HCF4007	
	Signetics	HEF4007	
	Solitron	CM4007	
	SSS	SCL4007	
	Toshiba	TC4007	
◆HD14008	Fairchild	F4008	
	Motorola	MC14008	
	National	CD4008	
		MM74C83	
	RCA	CD4008	
	SGS	HCC/HCF4008	
	Signetics	HEF4008	
	Solitron	CM4008	
	SSS	SCL4008	
	Toshiba	TC4008	
◆HD14009	National	CD4009	
	RCA	CD4009	
	SGS	HCC/HCF4009	
◆HD14009	Solitron	CM4009	
	SSS	SCL4009	
	Toshiba	TC4009	
◆HD14010	National	CD4010	
	RCA	CD4010	
	SGS	HCC/HCF4010	
	Solitron	CM4010	
	SSS	SCL4010	
	Toshiba	TC4010	
◆HD14011	Fairchild	F4011	
	Motorola	MC14011	
	National	CD4011	
		MM74C00	
	OKI	MSM4011	
	RCA	CD4011	
	Sanyo	LC4011	
	SGS	HCC/HCF4011	
	Signetics	HEF4011	
	Solitron	CM4011	
	SSS	SCL4011	
	Toshiba	TC4011	
◆HD14012	Fairchild	F4012	
	Motorola	MC14012	
	National	CD4012	
	RCA	CD4012	
	SGS	HCC/HCF4012	
	Signetics	HEF4012	
	Solitron	CM4012	
	SSS	SCL4012	
	Toshiba	TC4012	
◆HD14013	Fairchild	F4013	
	Motorola	MC14013	
	National	CD4013	
		MM74C74	
	OKI	MSM4013	
	RCA	CD4013	
	Sanyo	LC4013	
	SGS	HCC/HCF4013	
	Signetics	HEF4013	
	Solitron	CM4013	
	SSS	SCL4013	
	Toshiba	TC4013	
◆HD14014	Fairchild	F4014	
	Motorola	MC14014	
	National	CD4014	
	RCA	CD4014	
	SGS	HCC/HCF4014	
	Signetics	HEF4014	
	Solitron	CM4014	
	SSS	SCL4014	
	Toshiba	TC4014	
◆HD14015	Fairchild	F4015	
	Motorola	MC14015	
	National	CD4015	
		MM74C164	
	OKI	MSM4015	
	RCA	CD4015	
	Sanyo	LC4015	
	SGS	HCC/HCF4015	
	Signetics	HEF4015	
	Solitron	CM4015	
	SSS	SCL4015	
	Toshiba	TC4015	
◆HD14016	Fairchild	F4016	
		F4066	
	Motorola	MC14016	
		MC14066	
	National	CD4016	
		CD4066	
	RCA	CD4016	
		CD4066	
	Sanyo	LC4016	
		LC4066	
	SGS	HCC/HCF4016	
		HCC/HCF4066	
	Signetics	HEF4016	
		HEF4066	
	Solitron	CM4016	
		CM4066	
		HCF4016	
	SSS	SCL4016	
		SCL4066	
	Toshiba	TC4016	
		TC4066	
◆HD14017	Fairchild	F4017	
	Motorola	MC14017	
	National	CD4017	
	RCA	CD4017	
	SGS	HCC/HCF4017	
	Signetics	HEF4017	
	Solitron	CM4017	

(Continued)

◆ Discontinued

Bold face device numbers indicate manufacturers data is provided in the IC Master on the pages noted.

Hitachi America, Ltd. (Cont'd)

Manufacturer Device	Replacement Source	Device	IC Master Page
◆HD14017	SSS	SCL4017	
	Toshiba	TC4017	
◆HD14018	Fairchild	F4018	
	Motorola	MC14018	
	National	CD4018	
	RCA	CD4018	
	SGS	HCC/HCF4018	
	Signetics	HEF4018	
	Solitron	CM4018	
	SSS	SCL4018	
	Toshiba	TC4018	
◆HD14020	Fairchild	F4020	
	Motorola	MC14020	
	National	CD4020	
	RCA	CD4020	
	SGS	HCC/HCF4020	
	Signetics	HEF4020	
	Solitron	CM4020	
	SSS	SCL4020	
	Toshiba	TC4020	
◆HD14021	Fairchild	F4021	
	Motorola	MC14021	
	National	CD4021	
	RCA	CD4021	
	SGS	HCC/HCF4021	
	Signetics	HEF4021	
	SSS	SCL4021	
	Toshiba	TC4021	
◆HD14022	Fairchild	F4022	
	Motorola	MC14022	
	National	CD4022	
	RCA	CD4022	
	SGS	HCC/HCF4022	
	Signetics	HEF4022	
	Solitron	CM4022	
	SSS	SCL4022	
	Toshiba	TC4022	
◆HD14023	Fairchild	F4023	
	Motorola	MC14023	
	National	CD4023	
		MM74C10	
	RCA	CD4023	
	SGS	HCC/HCF4023	
	Signetics	HEF4023	
	Solitron	CM4023	
	SSS	SCL4023	
	Toshiba	TC4023	
◆HD14024	Fairchild	F4024	
	Motorola	MC14024	
	National	CD4024	
	RCA	CD4024	
	SGS	HCC/HCF4024	
	Signetics	HEF4024	
	Solitron	CM4024	
	SSS	SCL4024	
	Toshiba	TC4024	
◆HD14025	Fairchild	F4025	
	Motorola	MC14025	
	National	CD4025	
	RCA	CD4025	
	SGS	HCC/HCF4025	
	Signetics	HEF4025	
	Solitron	CM4025	
	SSS	SCL4025	
	Toshiba	TC4025	
◆HD14027	Fairchild	F4027	
	Motorola	MC14027	
	National	CD4027	
		MM74C76	
	OKI	MSM4027	
	RCA	CD4027	
	Sanyo	LC4027	
	SGS	HCC/HCF4027	
	Signetics	HEF4027	
	Solitron	CM4027	
	SSS	SCL4027	
◆HD14028	Fairchild	F4028	
	Motorola	MC14028	
	National	CD4028	
		MM74C42	
	OKI	MSM4028	
	RCA	CD4028	
	Sanyo	LC4028	
	SGS	HCC/HCF4028	
	Signetics	HEF4028	
	Solitron	CM4028	
	SSS	SCL4028	
	Toshiba	TC4028	
◆HD14032	Motorola	MC14032	
	RCA	CD4032	
			(Continued)
◆HD14032	SGS	HCC/HCF4032	
	Solitron	CM4032	
	Toshiba	TC4032	
◆HD14034	Fairchild	F4034	
	Motorola	MC14034	
	National	CD4034	
	RCA	CD4034	
	SGS	HCC/HCF4034	
	Solitron	CM4034	
	SSS	SCL4034	
	Toshiba	TC4034	
◆HD14035	Fairchild	F4035	
	Motorola	MC14035	
	RCA	CD4035	
	SGS	HCC/HCF4035	
	Signetics	HEF4035	
	Solitron	CM4035	
	Toshiba	TC4035	
◆HD14038	Motorola	MC14038	
	RCA	CD4038	
	SGS	HCC/HCF4038	
	Solitron	CM4038	
	Toshiba	TC4038	
◆HD14040	Fairchild	F4040	
	Motorola	MC14040	
	National	CD4040	
	RCA	CD4040	
	SGS	HCC/HCF4040	
	Signetics	HEF4040	
	Solitron	CM4040	
	SSS	SCL4040	
	Toshiba	TC4040	
◆HD14042	Fairchild	F4042	
	Motorola	MC14042	
	National	CD4042	
	RCA	CD4042	
	SGS	HCC/HCF4042	
	Signetics	HEF4042	
	Solitron	CM4042	
	SSS	SCL4042	
	Toshiba	TC4042	
◆HD14043	Motorola	MC14043	
	National	CD4043	
	RCA	CD4043	
	SGS	HCC/HCF4043	
	Signetics	HEF4043	
	Solitron	CM4043	
	SSS	SCL4043	
	Toshiba	TC4043	
◆HD14044	Fairchild	F4044	
	Motorola	MC14044	
	National	CD4044	
	RCA	CD4044	
	SGS	HCC/HCF4044	
	Signetics	HEF4044	
	Solitron	CM4044	
	Toshiba	TC4044	
◆HD14046	Fairchild	F4046	
	Motorola	MC14046	
	National	CD4046	
	RCA	CD4046	
	SGS	HCC/HCF4046	
	Solitron	CM4046	
	SSS	SCL4046	
◆HD14049	Fairchild	F4049	
	Motorola	MC14049	
	National	CD4049	
	OKI	MSM4049	
	RCA	CD4049	
	Sanyo	LC4049	
	SGS	HCC/HCF4049	
	Signetics	HEF4049	
	Solitron	CM4049	
	SSS	SCL4049	
	Toshiba	TC4049	
◆HD14050	Fairchild	F4050	
	Motorola	MC14050	
	National	CD4050	
	RCA	CD4050	
	SGS	HCC/HCF4050	
	Signetics	HEF4050	
	Solitron	CM4050	
	SSS	SCL4050	
	Toshiba	TC4050	
◆HD14051	Fairchild	F4051	
	Motorola	MC14051	
	National	CD4051	
	RCA	CD4051	
	SGS	HCC/HCF4051	
	Signetics	HEF4051	
	Solitron	CM4051	
			(Continued)
◆HD14051	SSS	SCL4051	
	Toshiba	TC4051	
◆HD14052	AD	AD7502	
	Datel	MVD409	
	Harris	HI1828A	
	MicroPwr	MP7502	
	National	CD4052	
	Solitron	CM4052	
	SSS	SCL4052	
	Toshiba	TC4052	
◆HD14053	Fairchild	F4053	
	Motorola	MC14053	
	National	CD4053	
	RCA	CD4053	
	SGS	HCC/HCF4053	
	Signetics	HEF4053	
	Solitron	CM4053	
	SSS	SCL4053	
	Toshiba	**TC4053B**	**1363**
◆HD14066	Fairchild	F4016	
		F4066	
	Motorola	MC14016	
		MC14066	
	National	CD4016	
		CD4066	
	RCA	CD4016	
		CD4066	
	Sanyo	LC4016	
		LC4066	
	SGS	HCC/HCF4016	
		HCC/HCF4066	
	Signetics	HEF4016	
		HEF4066	
	Solitron	CM4016	
		CM4066	
		HCF4016	
	SSS	SCL4016	
		SCL4066	
	Toshiba	TC4016	
		TC4066	
◆HD14068	Fairchild	F4068	
	Motorola	MC14068	
	RCA	CD4068	
	SGS	HCC/HCF4068	
	Signetics	HEF4068	
	Solitron	CM4068	
	SSS	SCL4068	
	Toshiba	TC4068	
◆HD14069	Fairchild	F4069	
	Motorola	MC14069	
	National	CD4069	
		MM54C04	
		MM74C04	
	OKI	MSM4069	
	RCA	CD4069	
	Sanyo	LC4069	
	SGS	HCC/HCF4069	
	Signetics	HEF4069	
	Solitron	CM4069	
	SSS	SCL4069	
		SCL4449	
	Toshiba	TC4069	
◆HD14070	Fairchild	F4070	
	Motorola	MC14070	
	National	CD4070	
		MM74C86	
	RCA	CD4070	
	SGS	HCC/HCF4070	
	Signetics	HEF4070	
	Solitron	CM4070	
	SSS	SCL4070	
◆HD14071	Fairchild	F4071	
	Motorola	MC14071	
	National	CD4071	
		MM74C32	
	OKI	MSM4071	
	RCA	CD4071	
	Sanyo	LC4071	
	SGS	HCC/HCF4071	
	Signetics	HEF4071	
	Solitron	CM4071	
	SSS	SCL4071	
	Toshiba	TC4071	
◆HD14072	Fairchild	F4072	
	Motorola	MC14072	
	National	CD4072	
	RCA	CD4072	
	SGS	HCC/HCF4072	
	Signetics	HEF4072	
	SSS	SCL4072	
	Toshiba	TC4072	
◆HD14073	Fairchild	F4073	
	Motorola	MC14073	
	National	CD4073	
	RCA	CD4073	
	SGS	HCC/HCF4073	
	Signetics	HEF4073	
	Solitron	CM4073	
	SSS	SCL4073	
	Toshiba	TC4073	
◆HD14075	Fairchild	F4075	
	Motorola	MC14075	
	National	CD4075	
	RCA	CD4075	
	SGS	HCC/HCF4075	
	Signetics	HEF4075	
	Solitron	CM4075	
	SSS	SCL4075	
	Toshiba	TC4075	
◆HD14076	Fairchild	F4076	
	Motorola	MC14076	
	National	CD4076	
		MM54C173	
		MM74C173	
	RCA	CD4076	
	SGS	HCC/HCF4076	
	Signetics	HEF4076	
	Solitron	CM4076	
	SSS	SCL4076	
	Toshiba	TC4076	
◆HD14077	Fairchild	F4077	
	Motorola	MC14077	
	National	CD4077	
	RCA	CD4077	
	SGS	HCC/HCF4077	
	Signetics	HEF4077	
	Solitron	CM4077	
	SSS	SCL4077	
◆HD14078	Fairchild	F4078	
	Motorola	MC14078	
	RCA	CD4078	
	SGS	HCC/HCF4078	
	Signetics	HEF4078	
	Solitron	CM4078	
	SSS	SCL4078	
	Toshiba	TC4078	
◆HD14081	Fairchild	F4081	
	Motorola	MC14081	
	National	CD4081	
		MM74C08	
	OKI	MSM4081	
	RCA	CD4081	
	Sanyo	LC4081	
	SGS	HCC/HCF4081	
	Signetics	HEF4081	
	Solitron	CM4081	
	SSS	SCL4081	
	Toshiba	TC4081	
◆HD14082	Fairchild	F4082	
	Motorola	MC14082	
	National	CD4082	
	RCA	CD4082	
	SGS	HCC/HCF4082	
	Signetics	HEF4082	
	SSS	SCL4082	
	Toshiba	TC4082	
◆HD14175	Fairchild	F40175	
	Motorola	MC14175	
	National	CD40175	
		MM54C175	
		MM74C175	
	Signetics	HEF40175	
	Toshiba	TC40175	
◆HD14194	Fairchild	F40194	
	Motorola	MC14194	
	RCA	CD40194	
	SGS	HCC/HCF40194	
	Signetics	HEF40194	
HD14443	Fairchild	µA9708	
	Hitachi	HD14447	
	Motorola	**MC14443**	**3629**
		MC14447	**3629**
HD14447	Fairchild	µA9708	
	Hitachi	HD14443	
	Motorola	**MC14443**	**3629**
		MC14447	**3629**
◆HD14502	Motorola	MC14502	
	RCA	CD4502	
	SGS	HCC/HCF4502	
	Signetics	HEF4502	
	SSS	SCL4502	
◆HD14503	Fairchild	F40097B	
	Motorola	MC14503	
			(Continued)

◆ Discontinued

The manufacturers report their devices can be used as direct replacements.
Performance details often differ, so compare the specifications considering your requirements.

Hitachi America, Ltd. (Cont'd)

Manufacturer Device	Replacement Source	Device	IC Master Page
◆HD14503	Motorola	MC14503B	
	National	CD4503	
	RCA	CD4503	
	SGS	HCC/CFH4503	
◆HD14508	Motorola	MC14508	
	National	DM74147	
	RCA	CD4508	
	SGS	HCC/HCF4508	
	Signetics	**74147**	1157
		HEF4508	
		N82147	
	Solitron	CM4508	
	SSS	SCL4508	
	TI	SN74147	
	Toshiba	TC4508	
◆HD14510	Fairchild	F4510	
	Motorola	MC14510	
	National	CD4510	
	RCA	CD4510	
	SGS	HCC/HCF4510	
	Signetics	HEF4510	
	Solitron	CM4510	
	SSS	SCL4510	
	Toshiba	TC4510	
◆HD14511	Fairchild	F4511	
	Mitel	MD4511	
	MMI	4511	
	Motorola	MC14511	
	National	CD4511	
	NEC	μPD4511	
	RCA	CD4511	
	SGS	HCC/HCF4511	
	Signetics	HEF4511	
	Solitron	CM4511	
	SSS	SCL4511	
	Toshiba	TC4511	
◆HD14512	Fairchild	F4512	
	Motorola	MC14512	
	National	CD4512	
	RCA	CD4512	
	SGS	HCC/HCF4512	
	SSS	SCL4512	
	Toshiba	TC4512	
◆HD14514	Fairchild	F4514	
	Motorola	MC14514	
	National	CD4514	
	RCA	CD4514	
	SGS	HCC/HCF4514	
	Signetics	HEF4514	
	Solitron	CM4514	
	SSS	SCL4514	
	Toshiba	TC4514	
◆HD14515	Fairchild	F4515	
	Motorola	MC14515	
	National	CD4515	
	RCA	CD4515	
	SGS	HCC/HCF4515	
	Signetics	HEF4515	
	Solitron	CM4515	
	SSS	SCL4515	
	Toshiba	TC4515	
◆HD14516	Fairchild	F4516	
	Motorola	MC14516	
	National	CD4516	
	RCA	CD4516	
	SGS	HCC/HCF4516	
	Signetics	HEF4516	
	Solitron	CM4516	
	SSS	SCL4516	
	Toshiba	TC4516	
◆HD14517	Motorola	MC14517	
	RCA	CD4517	
	SGS	HCC/HCF4517	
	Signetics	HEF4517	
	SSS	SCL4517	
◆HD14518	Fairchild	F4518	
	Motorola	MC14518	
	National	CD4518	
	RCA	CD4518	
	SGS	HCC/HCF4518	
	Signetics	HEF4518	
	Solitron	CM4518	
	SSS	SCL4518	
	Toshiba	TC4518	
◆HD14519	Hitachi	HD4519	
	Motorola	MC14519	
	National	CD4519	
	RCA	CD4519	
	Signetics	HEF4519	
◆HD14520	Fairchild	F4520	
	Motorola	MC14520	
	National	CD4520	
	OKI	MSM4520	
	RCA	CD4520	
	Sanyo	LC4520	
	SGS	HCC/HCF4520	
	Signetics	HEF4520	
	Solitron	CM4520	
	SSS	SCL4520	
	Toshiba	TC4520	
◆HD14526	Fairchild	F4526	
	Motorola	MC14526	
	National	CD4526	
	Signetics	HEF4526	
	SSS	SCL4526	
	Toshiba	TC4526	
◆HD14527	Fairchild	F4527	
	Motorola	MC14527	
	National	CD4527	
	RCA	CD4527	
	SGS	HCC/HCF4527	
	Signetics	HEF4527	
	SSS	SCL4527	
	Toshiba	TC4527	
◆HD14528	Fairchild	F4528	
	Motorola	MC14528	
	National	CD4528	
		MM74C221	
	RCA	CD4098	
	SGS	HCC/HCF4098	
	Signetics	HEF4528	
	SSS	SCL4528	
	Toshiba	TC4528	
◆HD14531	Fairchild	F4531	
	Motorola	MC14531	
	RCA	CD40101	
	SGS	HCC/HCF40101	
	Signetics	HEF4531	
	SSS	SCL4531	
	Toshiba	TC4531	
◆HD14532	Fairchild	F4532	
	Motorola	MC14532	
	RCA	CD4532	
	SGS	HCC/HCF4532	
	Signetics	HEF4532	
	SSS	SCL4532	
	Toshiba	TC4532	
◆HD14534	Motorola	MC14534	
	Signetics	HEF4534	
◆HD14539	Fairchild	F4539	
	Motorola	MC14539	
	Signetics	HEF4539	
	Toshiba	TC4539	
◆HD14543	Fairchild	F4543	
	Motorola	MC14543	
		MC14543B	
	National	CD4543	
	RCA	CD4543	
	Signetics	HEF4543	
	SSS	SCL4S43B	
	Toshiba	TC4543	
◆HD14553	Fairchild	F4553	
	Motorola	MC14533	
		MC14553	
◆HD14555	Fairchild	F4555	
	Motorola	MC14555	
	RCA	CD4555	
	SGS	HCC/HCF4555	
	Signetics	HEF4555	
	SSS	SCL4555	
	Toshiba	TC4555	
◆HD14557	Fairchild	F4557	
	Motorola	MC14557	
	Signetics	HEF4557	
◆HD14558	RCA	CD4055	
◆HD14560	Motorola	MC14560	
	Toshiba	TC4560	
◆HD14561	Motorola	MC14561	
	Toshiba	TC4561	
◆HD14566	Motorola	MC14566	
◆HD14568	Motorola	MC14568	
◆HD14569	Motorola	MC14569	
	RCA	CD4059	
	Signetics	HEF4059	
◆HD14572	Motorola	MC14572	
	Toshiba	TC4572	
◆HD14580	Motorola	MC14580	
	RCA	CD40108	
	SGS	HCC/HCF40108	
◆HD14581	Motorola	MC14581	
	National	74C181	
◆HD14581	RCA	CD40181	
		CD4057	
	SGS	HCC/HCF40181	
	SSS	SCL4581	
◆HD14582	Fairchild	F4582	
	Motorola	MC14582	
	National	74C182	
	RCA	CD40182	
	SGS	HCC/HCF40182	
	SSS	SCL4582	
◆HD14583	Fairchild	F4583	
	Motorola	MC14583	
	Toshiba	TC4583	
◆HD14584	Fairchild	F40014	
	Motorola	MC14584	
	National	CD40106	
		CD4584	
		MM54C14	
		MM74C14	
	RCA	CD40106	
	SGS	HCC/HCF40106	
	Signetics	HEF40106	
	SSS	SCL4584	
◆HD14585	Fairchild	F40085	
	Motorola	MC14585	
	National	MM74C85	
	RCA	CD4585	
	SGS	HCC/HCF4585	
	Signetics	HEF4585	
	SSS	SCL4585	
	Toshiba	TC4585	
HD146818	**Motorola**	**MC146818**	1663
	RCA	**CDP6818**	1673,1679
HD268T26	**Motorola**	**MC6880A**	3210
		MC8T26	
	Signetics	N8T26	
HD44231	GouldAMI	S44231	
HD44232	GouldAMI	S44232	
HD44233	GouldAMI	S44233	
HD44234	GouldAMI	S44234	
HD44235	GouldAMI	S44235	
HD44236	GouldAMI	S44236	
HD44237	GouldAMI	S44237	
HD44238	GouldAMI	S44238	
HD4519	Motorola	MC14519	
	National	CD4519	
	RCA	CD4519	
	Signetics	HEF4519	
HD6301	Hitachi	HD6303	
	Motorola	MC68HC01	
		MC68HC03	
HD6303	Hitachi	HD6301	
	Motorola	MC68HC01	
		MC68HC03	
HD6800	Fairchild	F6800A	
	Hitachi	HD68A00	
		HD68B00	
	Motorola	**MC6800**	1660
	ThomsonCSF	EF6800	
HD68000	**Mostek**	**MK68000**	1647
	Motorola	MC68000	
	Rockwell	R68000	
	Signetics	**SCN68000**	1720
	ThomsonCSF	EF68000	
HD6801	GouldAMI	S6801	
	ThomsonCSF	EF6801	
HD6802	Fairchild	F6802	
	GouldAMI	S6802	
	Motorola	**MC6802**	1660
	ThomsonCSF	EF6802	
HD6803	ThomsonCSF	EF6803	
HD6805	GouldAMI	S6805	
	Motorola	**MC6805**	1664,1667,1905
	ThomsonCSF	EF6805	
◆HD6808	Fairchild	F6808	
	GouldAMI	S6808	
	Motorola	**MC6808**	1660
	ThomsonCSF	EF6808	
HD6809	GouldAMI	S6809	
	Hitachi	HD68A09	
		HD68B09	
	Motorola	**MC6809**	1660,1905
	ThomsonCSF	EF6809	
HD6810	Fairchild	F6810	
	GouldAMI	S6810	
	Hitachi	HD68A10	
	Motorola	MC6810	
		MCM6810	1662,4119
	ThomsonCSF	EF6810	
HD6821	Fairchild	F6821	
	GouldAMI	S6821	
	Hitachi	HD68A21	
		HD68B21	
	ThomsonCSF	EF6821	
HD6840	Fairchild	F6840	
	GouldAMI	S6840	
	Motorola	**MC6840**	1663
HD6843	Motorola	MC6843	
HD6844	**Motorola**	**MC6844**	1662
HD6845	Fairchild	F6845	
	GouldAMI	S684SE	
	Motorola	**MC6845**	1661
HD68450	**Motorola**	**MC68450**	1656
HD6845A	Fairchild	F6845A	
	Motorola	MC6845A	
HD6846	Fairchild	F6846	
	GouldAMI	S6846	
	ThomsonCSF	EF6846	
HD6850	Fairchild	F6850	
	GouldAMI	S1602	
	Motorola	**MC6850**	1663
	ThomsonCSF	EF6850	
HD6852	Fairchild	F6852	
	GouldAMI	S6852	
	Motorola	**MC6852**	1663
HD68A00	Fairchild	F6800A	
	Hitachi	HD6800	
		HD68B00	
	Motorola	**MC6800**	1660
	ThomsonCSF	EF6800	
HD68A09	GouldAMI	S6809	
	Hitachi	HD6809	
		HD68B09	
	Motorola	**MC6809**	1660,1905
	ThomsonCSF	EF6809	
HD68A10	Fairchild	F6810	
	GouldAMI	S6810	
	Hitachi	HD6810	
	Motorola	MC6810	
		MCM6810	1662,4119
	ThomsonCSF	EF6810	
HD68A21	Fairchild	F6821	
	GouldAMI	S6821	
	Hitachi	HD6821	
		HD68B21	
	ThomsonCSF	EF6821	
HD68A45	Synertek	SY6845R	
HD68B00	Fairchild	F6800A	
	Hitachi	HD6800	
		HD68A00	
	Motorola	**MC6800**	1660
	ThomsonCSF	EF6800	
HD68B09	GouldAMI	S6809	
	Hitachi	HD6809	
		HD68A09	
	Motorola	**MC6809**	1660,1905
	ThomsonCSF	EF6809	
HD68B21	Fairchild	F6821	
	GouldAMI	S6821	
	Hitachi	HD6821	
		HD68A21	
	ThomsonCSF	EF6821	
HD68B45	Synertek	SY6845R	
◆HD7400	Fairchild	7400	
	National	DM7400	
	Signetics	**7400**	1156
	TI	SN7400	
	Toshiba	TC7400	
◆HD7401	Fairchild	7401	
	National	DM7401	
	TI	SN7401	
◆HD7402	Fairchild	7402	
	National	DM7402	
	Signetics	**7402**	1156
	TI	SN7402	
◆HD7403	Fairchild	7403	
	National	DM7403	
	Signetics	**7403**	1156
	TI	SN7403	
◆HD7404	Fairchild	7404	
	National	DM7404	
	Signetics	**7404**	1156
	TI	SN7404	
	Toshiba	TC7404	
◆HD7405	Fairchild	7405	
	National	DM7405	
	Signetics	**7405**	1156
	TI	SN7405	
◆HD7406	Fairchild	7406	
	National	DM7406	

(Continued)

◆ Discontinued

Bold face device numbers indicate manufacturers data is provided in the IC Master on the pages noted.

Hitachi America, Ltd. (Cont'd)

Manufacturer Device	Replacement Source	Device	IC Master Page
◆HD7406	**Signetics**	**7406**	**1156**
	TI	SN7406	
HD7407	Fairchild	7407	
	National	DM7407	
	Signetics	**7407**	**1156**
	TI	SN7407	
◆HD7408	Fairchild	7408	
	National	DM7408	
	Signetics	**7408**	**1156**
	TI	SN7408	
◆HD7409	Fairchild	7409	
	National	DM7409	
	TI	SN7409	
◆HD7410	Fairchild	7410	
	National	DM7410	
	Signetics	**7410**	**1156**
	TI	SN7410	
	Toshiba	TC7410	
◆HD74107	Fairchild	74107	
	National	DM74107	
	Signetics	**74107**	**1156**
	TI	SN74107	
HD7411	Fairchild	7411	
	National	DM7411	
	Signetics	**7411**	**1156**
◆HD7412	Fairchild	7412	
	TI	SN7412	
◆HD74121	Fairchild	74121	
	National	DM74121	
	Signetics	**74121**	**1157**
	TI	SN74121	
◆HD74125	Fairchild	74125	
	National	DM74125	
		DM8093	
	Signetics	**74125**	**1157**
	TI	SN74125	
		SN74425	
◆HD74126	Fairchild	74126	
	National	DM74126	
		DM8094	
	Signetics	**74126**	**1157**
	TI	SN74126	
		SN74426	
◆HD7413	Fairchild	7413	
	National	DM7413	
	Signetics	**7413**	**1156**
	TI	SN7413	
◆HD74132	Fairchild	74132	
	National	DM74132	
	Signetics	**74132**	**1157**
	TI	SN74132	
◆HD74136	Fairchild	74136	
	TI	SN74136	
◆HD7414	Fairchild	7414	
	National	DM7414	
	Signetics	**7414**	**1156**
	TI	SN7414	
◆HD74141	Fairchild	74141	
		93141	
	Hitachi	HD7441	
	National	DM74141	
		DM7441	
	Signetics	74141	
		7441	
	TI	SN74141	
◆HD74145	Fairchild	74145	
	National	DM74145	
	Signetics	**74145**	**1157**
	TI	SN74145	
◆HD74147	Motorola	MC14508	
	National	DM74147	
	RCA	CD4508	
	SGS	HCC/HCF4508	
	Signetics	**74147**	**1157**
		HEF4508	
		N82147	
	Solitron	CM4508	
	SSS	SCL4508	
	TI	SN74147	
	Toshiba	TC4508	
◆HD74148	National	DM74148	
		DM8318	
	Signetics	**74148**	**1157**
		N82148	
	TI	SN74148	
◆HD74150	Fairchild	74150	
	National	DM74150	
	Signetics	**74150**	**1157**
	TI	SN74150	
◆HD74153	Fairchild	74153	
	National	DM74153	
	Signetics	**74153**	**1157**
	TI	SN74153	
◆HD74156	Fairchild	74156	
	National	DM74156	
	Signetics	**74156**	**1157**
	TI	SN74156	
◆HD74157	National	DM74157	
	Signetics	**74157**	**1157**
	TI	SN74157	
◆HD7416	Fairchild	7416	
	National	DM7416	
	Signetics	**7416**	**1156**
	TI	SN7416	
◆HD74160	Fairchild	74160	
	National	DM74160	
	Signetics	**74160**	**1157**
	TI	SN74160	
◆HD74161	Fairchild	74161	
	National	DM74161	
	Signetics	**74161**	**1157**
	TI	SN74161	
◆HD74162	Fairchild	74162	
	National	DM74162	
	TI	SN74162	
◆HD74163	Fairchild	74163	
	National	DM74163	
	Signetics	**74163**	**1157**
	TI	SN74163	
◆HD74166	Fairchild	74166	
	National	DM74166	
	Signetics	**74166**	**1157**
	TI	SN74166	
◆HD7417	Fairchild	7417	
	National	DM7417	
	Signetics	**7417**	**1156**
	TI	SN7417	
HD74170	Fairchild	74170	
	National	DM74170	
	Signetics	**74170**	**1157**
	TI	SN74170	
◆HD74174	Fairchild	74174	
	National	DM74174	
	Signetics	**74174**	**1157**
	TI	SN74174	
◆HD74175	Fairchild	74175	
	National	DM74175	
	Signetics	**74175**	**1157**
	TI	SN74175	
◆HD74180	Fairchild	74180	
	National	DM74180	
	Signetics	**74180**	**1157**
	TI	SN74180	
HD74181	National	DM74181	
	Raytheon	RC9341	
	Signetics	**74181**	**1157**
	TI	SN74181	
◆HD74182	National	DM74182	
	TI	SN74182	
◆HD74190	Fairchild	74190	
	National	DM74190	
	Signetics	**74190**	**1157**
	TI	SN74190	
◆HD74191	Fairchild	74191	
	National	DM74191	
	Signetics	**74191**	**1157**
	TI	SN74191	
◆HD74194	Fairchild	74194	
	National	DM74194	
	Signetics	**74194**	**1157**
	TI	SN74194	
◆HD74198	Fairchild	74198	
	National	DM74198	
	Signetics	74198	
	TI	SN74198	
◆HD7420	Fairchild	7420	
		9004	
	National	DM7420	
		DM9004C	
	Signetics	**7420**	**1156**
	TI	SN7420	
	Toshiba	TC7420	
◆HD7422	Fairchild	7422	
	TI	SN7422	
◆HD7426	Fairchild	7426	
	National	DM7426	
		DM8810	
	Signetics	**7426**	**1156**
	TI	SN7426	
◆HD7427	Fairchild	7427	
	National	DM7427	
◆HD7427	**Signetics**	**7427**	**1156**
	TI	SN7427	
◆HD7430	Fairchild	7430	
	National	DM7430	
	Signetics	**7430**	**1156**
	TI	SN7430	
◆HD7432	Fairchild	7432	
	National	DM7432	
	Signetics	**7432**	**1156**
	TI	SN7432	
◆HD7437	Fairchild	7437	
	National	DM7437	
	Signetics	**7437**	**1156**
	TI	SN7437	
◆HD7438	Fairchild	7438	
	National	DM7438	
	Signetics	**7438**	**1156**
	TI	SN7438	
◆HD7440	Fairchild	7440	
	National	DM7440	
	Signetics	**7440**	**1156**
	TI	SN7440	
HD7441	Fairchild	74141	
		93141	
	National	DM74141	
		DM7441	
	Signetics	74141	
		7441	
	TI	SN74141	
◆HD7442	Fairchild	7442	
	National	DM7442	
		DM8842	
	Signetics	**7442**	**1156**
	TI	SN7442A	
◆HD7443	TI	SN7443	
		SN7443A	
◆HD7444	TI	SN7444A	
◆HD7445	Fairchild	7445	
	National	DM7445	
	Signetics	**7445**	**1156**
	TI	SN7445	
◆HD7446	Fairchild	7446	
	TI	SN7446A	
◆HD7450	Fairchild	7450	
	National	DM7450	
	Signetics	**7450**	**1156**
	TI	SN7450	
HD7451	Fairchild	7451	
	National	DM7451	
	Signetics	**7451**	**1156**
	TI	SN7451	
◆HD7453	Fairchild	7453	
	National	DM7453	
	TI	SN7453	
◆HD7454	Fairchild	7454	
	National	DM7454	
	TI	SN7454	
◆HD7460	Fairchild	7460	
	National	DM7460	
	TI	SN7460	
HD7470	Fairchild	7470	
	National	DM7470	
	TI	SN7470	
◆HD7472	Fairchild	7472	
	National	DM7472	
	TI	SN7472	
◆HD7473	Fairchild	7473	
	National	DM7473	
	Signetics	**7473**	**1156**
	TI	SN7473	
◆HD7474	Fairchild	7474	
	National	DM7474	
	Signetics	**7474**	**1156**
	TI	SN7474	
◆HD7475	Fairchild	7475	
	National	DM7475	
	Signetics	**7475**	**1156**
	TI	SN7475	
◆HD7476	Fairchild	7476	
	National	DM7476	
	Signetics	**7476**	**1156**
	TI	SN7476	
HD7482	National	DM7482	
	TI	SN7482	
◆HD7485	Fairchild	7485	
	National	DM7485	
	Signetics	**7485**	**1156**
	TI	SN7485	
◆HD7486	Fairchild	7486	
	National	DM7486	
	Signetics	**7486**	**1156**
	TI	SN7486	
◆HD7489	Fairchild	7489	
	National	DM7489	
		DM74S289	
		DM8589	
		MM74S289	
	Signetics	74S289	
		N82S25	
	TI	SN74S289B	
HD7494	Fairchild	7494	
	Signetics	**7494**	**1156**
	TI	SN7494	
◆HD7496	Fairchild	7496	
	National	DM7496	
	Signetics	**7496**	**1156**
	TI	SN7496	
HD74HC00	**Motorola**	**MC74HC00**	**1122**
	National	MM74HC00	
	RCA	**CD74HC00**	**1149**
	SPI	SP74HC00	
	SGS	M74HC00	
	Signetics	**74HC00**	**1156**
	TI	SN74HC00	
	Toshiba	**TC40H000**	**1363**
	Universal	US74HC00	
HD74HC01	TI	SN74HC01	
HD74HC02	**Motorola**	**MC74HC02**	**1122**
	National	MM74HC02	
	RCA	**CD74HC02**	**1149**
	SPI	SP74HC02	
	SGS	M74HC02	
	Signetics	**74HC02**	**1156**
	TI	SN74HC02	
	Toshiba	**TC40H002**	**1363**
	Universal	US74HC02	
HD74HC04	**Motorola**	**MC74HC04**	**1124**
	National	MM74HC04	
	RCA	**CD74HC04**	**1149**
	SPI	SP74HC04	
	SGS	M74HC04	
	TI	SN74HC04	
	Toshiba	**TC40H004**	**1363**
	Universal	US74HC04	
HD74HC08	**Motorola**	**MC74HC08**	**1122**
	National	MM74HC08	
	RCA	**CD74HC08**	**1149**
	SPI	SP74HC08	
	SGS	M74HC08	
	Signetics	**74HC08**	**1156**
	TI	SN74HC08	
	Universal	US74HC08	
HD74HC09	TI	SN74HC09	
HD74HC10	**Motorola**	**MC74HC10**	**1122**
	National	MM74HC10	
	RCA	**CD74HC10**	**1149**
	SPI	SP74HC10	
	SGS	M74HC10	
	Signetics	**74HC10**	**1156**
	SiliconG	SG75474	
	TI	SN74HC10	
	Toshiba	**TC40H010**	**1363**
	Universal	US74HC10	
HD74HC107	**Motorola**	**MC74HC107**	**1126**
	National	MM74HC107	
	Nitron	NC74HC107	
	RCA	**CD74HC107**	**1149**
	SPI	SP74HC107	
	SGS	M74HC107	
	Signetics	**74HC107**	**1156**
	TI	SN74HC107	
	Toshiba	**TC40H107**	**1363**
	Universal	US74HC107	
HD74HC109	Hitachi	HD74HC14	
	Motorola	**MC74HC109**	**1126**
	National	MM74HC109	
	Nitron	NC74HC109	
	RCA	**CD74HC109**	**1149**
	SPI	SP74HC109	
	SGS	M74HC109	
	Signetics	**74HC109**	**1156**
	TI	SN74HC109	
	Toshiba	**TC74HC109**	**1363**
	Universal	US74HC109	
HD74HC11	**Motorola**	**MC74HC11**	**1122**
	National	MM74HC11	
	RCA	**CD74HC11**	**1149**
	SPI	SP74HC11	
	SGS	M74HC11	
	Signetics	**74HC11**	**1156**
	TI	SN74HC11	
	Toshiba	**TC40H011**	**1363**
	Universal	US74HC11	

(Continued)

◆ Discontinued

The manufacturers report their devices can be used as direct replacements.
Performance details often differ, so compare the specifications considering your requirements.

Hitachi America, Ltd. (Cont'd)

Manufacturer Device	Replacement Source	Device	IC Master Page
HD74HC112	**Motorola**	**MC74HC112**	1126
	National	MM74HC112	
	RCA	**CD74HC112**	1149
	SPI	SP74HC112N	
	SGS	M74HC112	
	Signetics	**74HC112**	1156
	TI	SN74HC112	
	Universal	US74HC112	
HD74HC113	**Motorola**	**MC74HC113**	1126
	National	MM74HC113	
	SPI	SP74HC113	
	SGS	M74HC113	
	TI	SN74HC113	
	Universal	US74HC113	
HD74HC114	TI	SN74HC114	
HD74HC123	Motorola	MC74HC123	
	National	MM74HC123	
	SGS	M74HC123	
	Signetics	**74HC123**	1157
	TI	SN74HC123	
	Universal	US74HC123	
HD74HC125	**Motorola**	**MC74HC125**	1124
	National	MM74HC125	
	SPI	SP74HC125	
	SGS	M74HC125	
	TI	SN74HC125	
	Toshiba	**TC74HC125**	1363
	Universal	US74HC125	
HD74HC126	**Motorola**	**MC74HC126**	1124
	National	MM74HC126	
	SPI	SP74HC126	
	SGS	M74HC126	
	TI	SN74HC126	
	Toshiba	**TC74HC126**	1363
	Universal	US74HC126	
HD74HC132	**Motorola**	**MC74HC132**	1125
	National	MM74HC132	
	RCA	**CD74HC132**	1149
	SPI	SP74HC132	
	SGS	M74HC132	
	Signetics	**74HC132**	1157
	TI	SN74HC132	
	Universal	US74HC132	
HD74HC137	Motorola	MC74HC137	
	National	MM74HC137	
	SPI	SP74HC137	
	SGS	M74HC137	
	TI	SN74HC137	
	Toshiba	**TC74HC137**	1363
	Universal	US74HC137	
HD74HC138	**Motorola**	**MC74HC138**	1130
	National	MM74HC138	
	Nitron	NC74HC138	
	RCA	**CD74HC138**	1150
	SPI	SP74HC138	
	SGS	M74HC138	
	Signetics	**74HC138**	1157
	SSS	SS74HC138	
	TI	SN74HC138	
	Universal	US74HC138	
HD74HC139	**Motorola**	**MC74HC139**	1130
	National	MM74HC139	
	Nitron	NC74HC139	
	RCA	**CD74HC139**	1150
	SPI	SP74HC139	
	SGS	M74HC139	
	Signetics	**74HC139**	1157
	SSS	SS74HC139	
	TI	SN74HC139	
	Toshiba	**TC40H139**	1363
	Universal	US74HC139	
HD74HC14	Hitachi	HD74HC109	
	Motorola	**MC74HC109**	1126
	National	MM74HC109	
	Nitron	NC74HC109	
	RCA	**CD74HC109**	1149
	SPI	SP74HC109	
	SGS	M74HC109	
	Signetics	**74HC109**	1156
	TI	SN74HC109	
	Toshiba	**TC74HC109**	1363
	Universal	US74HC109	
HD74HC147	**Motorola**	**MC74HC147**	1131
	National	MM74HC147	
	RCA	**CD74HC147**	1150
	SPI	SP74HC147	
	SGS	M74HC147	
	Signetics	**74HC147**	1157
	TI	SN74HC147	
	Universal	US74HC147	
HD74HC148	Nitron	NC74HC148	
	SPI	SP74HC148	
	SGS	M74HC148	
	TI	SN74HC148	
	Toshiba	**TC74HC148**	1363
HD74HC151	**Motorola**	**MC74HC151**	1129
	National	MM74HC151	
	RCA	**CD74HC151**	1150
	SPI	SP74HC151	
	SGS	M74HC151	
	Signetics	**74HC151**	1157
	TI	SN74HC151	
	Universal	US74HC151	
HD74HC152	TI	SN74HC152	
HD74HC153	**Motorola**	**MC74HC153**	1129
	National	MM74HC153	
	RCA	**CD74HC153**	1150
	SPI	SP74HC153	
	SGS	M74HC153	
	Signetics	**74HC153**	1157
	TI	SN74HC153	
	Toshiba	**TC40H153**	1363
	Universal	US74HC153	
HD74HC154	**Motorola**	**MC74HC154**	1130
	National	MM74HC154	
	RCA	**CD74HC154**	1150
	SGS	M74HC154	
	Signetics	**74HC154**	1157
	TI	SN74HC154	
	Universal	US74HC154	
HD74HC157	**Motorola**	**MC74HC157**	1129
	National	MM74HC157	
	Nitron	NC74HC157	
	RCA	**CD74HC157**	1150
	SPI	SP74HC157	
	SGS	M74HC157	
	Signetics	**74HC157**	1157
	TI	SN74HC157	
	Toshiba	**TC40H157**	1363
	Universal	US74HC157	
HD74HC158	**Motorola**	**MC74HC158**	1129
	National	MM74HC158	
	RCA	**CD74HC158**	1150
	SPI	SP74HC158	
	SGS	M74HC158	
	Signetics	**74HC158**	1157
	TI	SN74HC158	
	Toshiba	**TC40H158**	1363
	Universal	US74HC158	
HD74HC161	**Motorola**	**MC74HC161**	1127
	National	MM74HC161	
	RCA	**CD74HC161**	1150
	SPI	SP74HC161	
	SGS	M74HC161	
	Signetics	**74HC161**	1157
	TI	SN74HC161	
	Universal	US74HC161	
HD74HC162	**Motorola**	**MC74HC162**	1127
	National	MM74HC162	
	RCA	**CD74HC162**	1150
	SPI	SP74HC162	
	SGS	M74HC162	
	Signetics	**74HC162**	1157
	TI	SN74HC162	
	Universal	US74HC162	
HD74HC163	**Motorola**	**MC74HC163**	1127
	National	MM74HC163	
	RCA	**CD74HC163**	1150
	SPI	SP74HC163	
	SGS	M74HC163	
	Signetics	**74HC163**	1157
	TI	SN74HC163	
	Universal	US74HC163	
HD74HC164	**Motorola**	**MC74HC164**	1128
	National	MM74HC164	
	RCA	**CD74HC164**	1149
	SPI	SP74HC164	
	SGS	M74HC164	
	Signetics	**74HC164**	1157
	TI	SN74HC164	
	Universal	US74HC164	
HD74HC165	**Motorola**	**MC74HC165**	1128
	National	MM74HC165	
	RCA	**CD74HC165**	1149
	SPI	SP74HC165	
	SGS	M74HC165	
	Signetics	**74HC165**	1157
	TI	SN74HC165	
	Universal	US74HC165	
HD74HC173	**Motorola**	**MC74HC173**	1126
	National	MM74HC173	
	RCA	**CD74HC173**	1149
		(Continued)	
HD74HC173	SPI	SP74HC173	
	SGS	M74HC173	
	Signetics	**74HC173**	1157
	TI	SN74HC173	
	Universal	US74HC173	
HD74HC174	**Motorola**	**MC74HC174**	1126
	National	MM74HC174	
	Nitron	NC74HC174	
	RCA	**CD74HC174**	1149
	SPI	SP74HC174	
	SGS	M74HC174	
	Signetics	74HC174	
	TI	SN74HC174	
	Toshiba	**TC40H174**	1363
	Universal	US74HC174	
HD74HC175	**Motorola**	**MC74HC175**	1126
	National	MM74HC175	
	Nitron	NC74HC175	
	RCA	**CD74HC175**	1149
	SPI	SP74HC175	
	SGS	M74HC175	
	Signetics	**74HC175**	1157
	TI	SN74HC175	
	Toshiba	**TC40H175**	1363
	Universal	US74HC175	
HD74HC190	Motorola	MC74HC190	
	RCA	**CD74HC190**	1150
	SGS	M74HC190	
	Signetics	PC74HC190	
		PCF74HC190	
	TI	SN74HC190	
	Toshiba	**TC74HC190**	1363
	Universal	US74HC190	
HD74HC191	Nitron	NC74HC191	
	RCA	**CD74HC191**	1150
	SGS	M74HC191	
	Signetics	**74HC191**	1157
	TI	SN74HC191	
	Universal	US74HC191	
HD74HC192	**Motorola**	**MC74HC192**	1127
	National	MM74HC192	
	RCA	**CD74HC192**	1150
	SPI	SP74HC192	
	SGS	M74HC192	
	Signetics	**74HC192**	1157
	TI	SN74HC192	
	Toshiba	**TC40H192**	1363
	Universal	US74HC192	
HD74HC193	**Motorola**	**MC74HC193**	1127
	National	MM74HC193	
	RCA	**CD74HC193**	1150
	SPI	SP74HC193	
	SGS	M74HC193	
	Signetics	**74HC193**	1157
	TI	SN74HC193	
	Toshiba	**TC40H193**	1363
	Universal	US74HC193	
HD74HC194	**Motorola**	**MC74HC194**	1128
	National	MM74HC194	
	RCA	**CD74HC194**	1149
	SPI	SP74HC194	
	SGS	M74HC194	
	Signetics	**74HC194**	1157
	TI	SN74HC194	
	Universal	US74HC194	
HD74HC195	**Motorola**	**MC74HC195**	1128
	National	MM74HC195	
	RCA	**CD74HC195**	1149
	SPI	SP74HC195	
	SGS	M74HC195	
	Signetics	**74HC195**	1157
	TI	SN74HC195	
	Universal	US74HC195	
HD74HC20	**Motorola**	**MC74HC20**	1122
	National	MM74HC20	
	RCA	**CD74HC20**	1149
	SPI	SP74HC20	
	SGS	M74HC20	
	Signetics	**74HC20**	1156
	TI	SN74HC20	
	Toshiba	**TC40H020**	1363
	Universal	US74HC20	
HD74HC21	TI	SN74HC21	
	Toshiba	**TC74HC21**	1363
	Universal	US74HC21	
HD74HC221	TI	SN74HC221	
HD74HC237	Motorola	MC74HC237	
	SGS	M74HC237	
	TI	SN74HC137	
		SN74HC237	
	Toshiba	**TC74HC237**	1363
	Universal	US74HC237	
HD74HC240	Mitel	MD74HC240	
	Motorola	**MC74HC240**	1124
	National	MM74HC240	
	Nitron	NC74HC240	
	RCA	**CD74HC240**	1149
	SPI	SP74HC240	
	SGS	M74HC240	
	Signetics	**74HC240**	1157
	SSS	SS74HC240	
	Supertex	SI74HC240	
	TI	SN74HC240	
	Toshiba	**TC40H240**	1363
	Universal	US74HC240	
	Zytrex	ZX74HC240	
HD74HC241	Mitel	MD74HC241	
	Motorola	**MC74HC241**	1124
	National	MM74HC241	
	Nitron	NC74HC241	
	RCA	**CD74HC241**	1149
	SPI	SP74HC241	
	SGS	M74HC241	
	Signetics	**74HC241**	1157
	SSS	SS74HC241	
	Supertex	SI74HC241	
	TI	SN74HC241	
	Universal	US74HC240	
	Zytrex	ZX74HC241	
HD74HC242	**Motorola**	**MC74HC242**	1124
	National	MM74HC242	
	Nitron	NC74HC242	
	RCA	**CD74HC242**	1149
		SGN	
	SPI	SP74HC242	
	SGS	M74HC242	
	Signetics	**74HC242**	1158
	TI	SN74HC242	
	Universal	US74HC242	
HD74HC243	**Motorola**	**MC74HC243**	1124
		MC74HC245	1124
	National	MM74HC243	
	RCA	**CD74HC243**	1149
	SPI	SP74HC243	
	SGS	M74HC243	
		M74HC245	
	Signetics	**74HC243**	1158
	TI	SN74HC243	
	Universal	US74HC243	
HD74HC244	Mitel	MD74HC244	
	Motorola	**MC74HC244**	1124
	National	MM74HC244	
	Nitron	NC74HC244	
	RCA	**CD74HC244**	1149
	SPI	SP74HC244	
	SGS	M74HC244	
	Signetics	**74HC244**	1158
	SSS	SS74HC244	
	Supertex	SI74HC244	
	TI	SN74HC244	
	Universal	US74HC244	
	Zytrex	ZX74HC244	
HD74HC245	**Motorola**	**MC74HC245**	1124
	National	MM74HC245	
	Nitron	NC74HC245	
	RCA	**CD74HC245**	1149
	Signetics	**74HC245**	1158
	SSS	SS74HC245	
	TI	SN74HC245	
	Universal	US74HC245	
HD74HC251	**Motorola**	**MC74HC251**	1129
	National	MM74HC251	
	RCA	**CD74HC251**	1150
	SPI	SP74HC251	
	SGS	M74HC251	
	Signetics	**74HC251**	1158
	TI	SN74HC251	
	Universal	US74HC251	
HD74HC253	**Motorola**	**MC74HC253**	1129
	National	MM74HC253	
	RCA	**CD74HC253**	1150
	SPI	SP74HC253	
	SGS	M74HC253	
	Signetics	**74HC253**	1158
	TI	SN74HC253	
	Universal	US74HC253	
HD74HC257	**Motorola**	**MC74HC257**	1129
	National	MM74HC257	
	Nitron	NC74HC257	
	RCA	**CD74HC257**	1150
	SPI	SP74HC257	
	SGS	M74HC257	
	Signetics	**74HC257**	1158
		(Continued)	

◆ Discontinued

Bold face device numbers indicate manufacturers data is provided in the IC Master on the pages noted.

Hitachi America, Ltd. (Cont'd)

Manufacturer Device	Replacement Source	Device	IC Master Page
HD74HC257	TI	SN74HC257	
	Universal	US74HC257	
HD74HC258	Motorola	MC74HC258	
	TI	SN74HC258	
	Toshiba	**TC74HC258**	1363
	Universal	US74HC258	
HD74HC259	**Motorola**	**MC74HC259**	1126
	National	MM74HC259	
	RCA	**CD74HC259**	1150
	SPI	SP74HC259	
	Signetics	**74HC259**	1158
	TI	SN74HC259	
	Universal	US74HC259	
HD74HC266	**Motorola**	**MC74HC266**	1123
	National	MM74HC266	
	SPI	SP74HC266	
	SGS	M74HC266	
	Signetics	**74HC266**	1158
	TI	SN74HC266	
	Universal	US74HC266	
HD74HC27	Hitachi	HD74HC32	
	Motorola	**MC74HC32**	1122
	National	MM74HC32	
	RCA	**CD74HC32**	1149
	SPI	SP74HC32	
	SGS	M74HC32	
	Signetics	**74HC32**	1156
	TI	SN74HC32	
	Toshiba	**TC40H032**	1363
	Universal	US74HC32	
HD74HC273	CTI	74HC273	
	Motorola	**MC74HC273**	1126
	Nitron	NC74HC273	
	RCA	**CD74HC273**	1149
	SPI	SP74HC273	
	SGS	M74HC273	
	Signetics	**74HC273**	1158
	TI	SN74HC273	
	Universal	US74HC273	
HD74HC280	**Motorola**	**MC74HC280**	1132
	National	MM74HC280	
	RCA	**CD74HC280**	1150
	SPI	SP74HC280	
	SGS	M74HC280	
	Signetics	**74HC280**	1158
	TI	SN74HC280	
HD74HC298	Motorola	MC74HC298	
	SPI	SP74HC298	
	SGS	M74HC298	
	TI	SN74HC298	
	Universal	US74HC298	
HD74HC299	TI	SN74HC299	
HD74HC30	**Motorola**	**MC74HC30**	1122
	National	MM74HC30	
	RCA	**CD74HC30**	1149
	SPI	SP74HC30	
	SGS	M74HC30	
	Signetics	**74HC30**	1156
	TI	SN74HC30	
	Universal	US74HC30	
HD74HC32	Hitachi	HD74HC27	
	Motorola	**MC74HC32**	1122
	National	MM74HC32	
	RCA	**CD74HC32**	1149
	SPI	SP74HC32	
	SGS	M74HC32	
	Signetics	**74HC32**	1156
	TI	SN74HC32	
	Toshiba	**TC40H032**	1363
	Universal	US74HC32	
HD74HC354	**Motorola**	**MC74HC354**	1130
	National	MM74HC354	
	RCA	**CD74HC354**	1150
	SGS	M74HC354	
	Signetics	**74HC354**	1158
	TI	SN74HC354	
	Universal	US74HC354	
HD74HC356	**Motorola**	**MC74HC356**	1130
	National	MM74HC356	
	RCA	**CD74HC356**	1150
	SGS	M74HC356	
	Signetics	**74HC356**	1158
	TI	SN74HC356	
	Universal	US74HC356	
HD74HC365	**Motorola**	**MC74HC365**	1124
	National	MM74HC365	
	RCA	**CD74HC365**	1149
	SPI	SP74HC365	
	SGS	M74HC365	
HD74HC365	TI	SN74HC365	
	Universal	US74HC365	
HD74HC366	**Motorola**	**MC74HC366**	1124
	National	MM74HC366	
	RCA	**CD74HC366**	1149
	SPI	SP74HC366	
	SGS	M74HC366	
	Signetics	**74HC366**	1158
	TI	SN74HC366	
	Universal	US74HC366	
HD74HC367	**Motorola**	**MC74HC367**	1124
	National	MM74HC367	
	Nitron	NC74HC367	
	RCA	**CD74HC367**	1149
	SPI	SP74HC367	
	SGS	M74HC367	
	Signetics	**74HC367**	1158
	TI	SN74HC367	
	Universal	US74HC367	
HD74HC368	**Motorola**	**MC74HC368**	1124
	National	MM74HC368	
	RCA	**CD74HC368**	1149
	SGS	M74HC368	
	Signetics	**74HC368**	1158
	TI	SN74HC368	
	Universal	US74HC368	
HD74HC373	Mitel	MD74HC373	
	Motorola	**MC74HC373**	1126
	National	MM74HC373	
	Nitron	NC74HC373	
	RCA	**CD74HC373**	1150
	SPI	SP74HC373	
	SGS	M74HC373	
	Signetics	**74HC373**	1158
	SSS	SS74HC373	
	Supertex	SI74HC373	
	TI	SN74HC373	
	Universal	US74HC373	
	Zytrex	ZX74HC373	
HD74HC374	Mitel	MD74HC374	
	Motorola	**MC74HC374**	1126
	National	MM74HC374	
	Nitron	NC74HC374	
	RCA	**CD74HC374**	1149
	SPI	SP74HC374	
	SGS	M74HC374	
	Signetics	**74HC374**	1158
	SSS	SS74HC374	
	TI	SN74HC374	
	Universal	US74HC374	
	Zytrex	ZX74HC374	
HD74HC375	Motorola	MC74HC375	
	TI	SN74HC375	
	Toshiba	**TC74HC375**	1363
	Universal	US74HC375	
HD74HC377	Motorola	MC74HC377	
	RCA	**CD74HC377**	1149
	SGS	M74HC377	
	Signetics	**74HC377**	1158
	TI	SN74HC377	
	Universal	US74HC377	
HD74HC390	**Motorola**	**MC74HC390**	1127
	National	MM74HC390	
	RCA	**CD74HC390**	1150
	SPI	SP74HC390	
	SGS	M74HC390	
	Signetics	**74HC390**	1158
	TI	SN74HC390	
	Universal	US74HC390	
HD74HC393	**Motorola**	**MC74HC393**	1127
	National	MM74HC393	
	Nitron	NC74HC393	
	RCA	**CD74HC393**	1150
	SPI	SP74HC393	
	SGS	M74HC393	
	Signetics	**74HC393**	1158
	TI	SN74HC393	
	Universal	US74HC393	
HD74HC4020	**Motorola**	**MC74HC4020**	1128
	National	MM74HC4020	
	RCA	**CD74HC4020**	1150
	SPI	SP74HC4020	
	SGS	M74HC4020	
	Signetics	**74HC4020**	1160
	TI	SN74HC4020	
	Universal	US74HC4020	
HD74HC4024	Motorola	MC74HC4024	
	RCA	**CD74HC4024**	1150
	SGS	M74HC4024	
	Signetics	**74HC4024**	1160
	TI	SN74HC4024	
	Universal	US74HC4024	
HD74HC4040	**Motorola**	**MC74HC4040**	1128
	National	MM74HC4040	
	RCA	**CD74HC4040**	1150
	SPI	SP74HC4040	
	SGS	M74HC4040	
	Signetics	**74HC4040**	1160
	TI	SN74HC4040	
	Universal	US74HC4040	
HD74HC42	**Motorola**	**MC74HC42**	1130
	National	MM74HC42	
	Nitron	NC74HC42	
	RCA	**CD74HC42**	1150
	SPI	SP74HC42	
	SGS	M74HC42	
	Signetics	**74HC42**	1156
	TI	SN74HC42	
	Universal	US74HC42	
HD74HC423	TI	SN74HC423	
	Toshiba	**TC74HC423**	1363
	Universal	US74HC423	
HD74HC4514	**Motorola**	**MC74HC4514**	1130
	National	MM74HC4514	
	RCA	**CD74HC4514**	1150
	SGS	M74HC4514	
	Signetics	**74HC4514**	1161
	TI	SN74HC4514	
	Universal	US74HC4514	
HD74HC490	TI	SN74HC490	
HD74HC51	Motorola	MC74HC51	
	National	MM74HC51	
	Nitron	NC74HC51	
	TI	SN74HC51	
	Toshiba	**TC74HC51**	1363
	Universal	US74HC51	
HD74HC533	**Motorola**	**MC74HC533**	1126
	National	MM74HC533	
	RCA	**CD74HC533**	1150
	SPI	SP74HC533	
	SGS	M74HC533	
	Signetics	**74HC533**	1159
	SSS	SS74HC533	
	TI	SN74HC533	
	Universal	US74HC533	
HD74HC534	**Motorola**	**MC74HC534**	1127
	National	MM74HC534	
	RCA	**CD74HC534**	1149
	SPI	SP74HC534	
	SGS	M74HC534	
	Signetics	**74HC534**	1159
	SSS	SS74HC534	
	TI	SN74HC534	
	Universal	US74HC534	
HD74HC540	**Motorola**	**MC74HC540**	1125
	RCA	**CD74HC540**	1149
	SGS	M74HC540	
	Signetics	**74HC540**	1159
	SSS	SS74HC540	
	TI	SN74HC540	
	Toshiba	**TC74HC540**	1363
	Universal	US74HC540	
HD74HC541	**Motorola**	**MC74HC541**	1125
	RCA	**CD74HC541**	1149
	SGS	M74HC541	
	Signetics	**74HC541**	1159
	SSS	SS74HC541	
	TI	SN74HC541	
	Universal	US74HC541	
HD74HC563	**Motorola**	**MC74HC563**	1126
	National	MM74HC563	
	RCA	**CD74HC563**	1150
	SPI	SP74HC563	
	SGS	M74HC563	
	Signetics	**74HC563**	1159
	SSS	SS74HC563	
	TI	SN74HC563	
	Universal	US74HC563	
HD74HC564	**Motorola**	**MC74HC564**	1127
	National	MM74HC564	
	RCA	**CD74HC564**	1149
		MC74HC564	
	SGS	M74HC564	
	Signetics	**74HC564**	1159
	SSS	SS74HC564	
	TI	SN74HC564	
	Universal	US74HC564	
HD74HC573	**Motorola**	**MC74HC573**	1126
	National	MM74HC573	
	RCA	**CD74HC573**	1150
	SPI	SP74HC573	
	SGS	M74HC573	
	Signetics	**74HC573**	1159
	SSS	SS74HC573	
HD74HC573	TI	SN74HC573	
	Toshiba	**TC74HC573**	1363
	Universal	US74HC573	
HD74HC574	**Motorola**	**MC74HC574**	1127
	National	MM74HC574	
	RCA	**CD74HC574**	1149
	SPI	SP74HC574	
	SGS	M74HC574	
	Signetics	**74HC574**	1159
	SSS	SS74HC574	
	TI	SN74HC574	
	Universal	US74HC574	
HD74HC590	Motorola	MC74HC590	
	TI	SN74HC590	
	Universal	US74HC590	
HD74HC592	Motorola	MC74HC592	
	TI	SN74HC592	
	Universal	US74HC592	
HD74HC593	Motorola	MC74HC593	
	TI	SN74HC593	
	Universal	US74HC593	
HD74HC595	Cypress	CY7C164	
	Inmos	IMS1620	
	Motorola	MC74HC595	
	NEC	MPD4362	
	SGS	M74HC595	
	TI	SN74HC595	
	Universal	US74HC595	
HD74HC597	TI	SNN74HC597	
	Universal	US74HC597	
HD74HC620	TI	SN74HC620	
	Toshiba	**TC74HC620**	1363
HD74HC623	TI	SN74HC623	
	Toshiba	**TC74HC623**	1363
HD74HC640	**Motorola**	**MC74HC640**	1125
	National	MM74HC640	
	Nitron	NC74HC640	
	RCA	**CD74HC640**	1149
	Signetics	**74HC640**	1159
	SSS	SS74HC640	
	TI	SN74HC640	
	Universal	US74HC640	
HD74HC643	**Motorola**	**MC74HC643**	1125
	National	MM74HC643	
	RCA	**CD74HC643**	1149
	SGS	M74HC643	
	Signetics	**74HC643**	1159
	SSS	SS74HC643	
	TI	SN74HC643	
	Universal	US74HC643	
HD74HC646	**Motorola**	**MC74HC646**	1125
	National	MM74HC646	
	Nitron	NC74HC646	
	RCA	**CD74HC646**	1149
	SGS	M74HC646	
	Signetics	**74HC646**	1159
	TI	SN74HC646	
	Universal	US74HC646	
HD74HC648	**Motorola**	**MC74HC648**	1125
	National	MM74HC648	
	RCA	**CD74HC648**	1149
	SGS	M74HC648	
	Signetics	**74HC648**	1159
	TI	SN74HC648	
	Universal	US74HC648	
HD74HC651	Motorola	MC74HC651	
	TI	SN74HC651	
	Toshiba	**TC74HC651**	1363
HD74HC652	Motorola	MC74HC652	
	TI	SN74HC652	
	Toshiba	**TC74HC652**	1363
HD74HC73	**Motorola**	**MC74HC73**	1126
	National	MM74HC73	
	RCA	**CD74HC73**	1149
	SPI	SP74HC73	
	SGS	M74HC73	
	Signetics	**74HC73**	1156
	TI	SN74HC73	
	Toshiba	**TC74HC73**	1363
	Universal	US74HC73	
HD74HC74	**Motorola**	**MC74HC74**	1126
	National	MM74HC74	
	Nitron	NC74HC74	
	RCA	**CD74HC74**	1149
	SPI	SP74HC74	
	SGS	M74HC74	
	Signetics	**74HC74**	1156
	TI	SN74HC74	
	Toshiba	**TC40H074**	1363
	Universal	US74HC74	
HD74HC75	**Motorola**	**MC74HC75**	1126
	National	MM74HC75	

(Continued)

◆ Discontinued

The manufacturers report their devices can be used as direct replacements.
Performance details often differ, so compare the specifications considering your requirements.

Hitachi America, Ltd. (Cont'd)

Manufacturer Device	Replacement Source	Device	IC Master Page
HD74HC75	**RCA**	**CD74HC75**	**1150**
	SPI	SP74HC75	
	SGS	M74HC75	
	Signetics	**74HC75**	**1156**
	TI	SN74HC75	
	Toshiba	**TC74HC75**	**1363**
	Universal	US74HC75	
HD74HC76	**Motorola**	**MC74HC76**	**1126**
	National	MM74HC76	
	SPI	SP74HC76	
	SGS	M74HC76	
	Signetics	74HC76	
	TI	SN74HC76	
	Toshiba	**TC40H076**	**1363**
	Universal	US74HC76	
HD74HC77	National	MM74HC77	
	RCA	CD74HC77	
	SPI	SP74HC77	
	TI	SN74HC77	
	Toshiba	**TC74HC77**	**1363**
HD74HC78	TI	SN74HC78	
HD74HC86	**Motorola**	**MC74HC86**	**1123**
	National	MM74HC86	
	RCA	**CD74HC86**	**1149**
	SPI	SP74HC86N	
	SGS	M74HC86	
	Signetics	**74HC86**	**1156**
	TI	SN74HC86	
	Universal	US74HC86	
HD74HCT125	Motorola	MC74HCT125	
	TI	SN74HCT125	
	Universal	US74HCT125	
HD74HCT126	Motorola	MC74HCT126	
	TI	SN74HCT126	
	Universal	US74HCT126	
HD74HCT240	CTI	74HCT240	
	Micrel	MIC74HCT240	
	MicroTech	74HCTR240	
	Mitel	MD74HCT240	
	Motorola	MC74HCT240	
	National	MM74HCT240	
	Nitron	NC74HCT240	
	Plessey	MV74HCT240	
	RCA	**CD74HCT240**	**1149**
	SPI	SP74HCT240	
	SGS	M74HCT240	
	Signetics	**74HCT240**	**1157**
	SSS	SS74HCT240	
	Supertex	SI74HCT240	
	TI	SN74HCT240	
	Toshiba	**TC74HCT240**	**1363**
	Universal	US74HCT240	
	Zytrex	ZX74HCT240-2	
HD74HCT241	CTI	74HCT241	
	Micrel	MIC74HCT241	
	MicroTech	74HCTR241	
	Mitel	MD74HCT241	
	Motorola	MC74HCT241	
	National	MM74HCT241	
	Nitron	NC74HCT241	
	Plessey	MV74HCT241	
	RCA	**CD74HCT241**	**1149**
	SPI	SP74HCT241	
	SGS	M74HCT241	
	Signetics	**74HCT241**	**1157**
	SSS	SS74HCT241	
	Supertex	SI74HCT241	
	TI	SN74HCT241	
	Toshiba	**TC74HCT241**	**1363**
	Universal	US74HCT241	
	Zytrex	ZX74HCT241-2	
HD74HCT242	Micrel	MIC74HCT242	
	Nitron	NC74HCT242	
	RCA	**CD74HCT242**	**1149**
	Signetics	**74HCT242**	**1158**
	TI	SN74HCT242	
	Universal	US74HCT242	
HD74HCT243	Micrel	MIC74HCT243	
	RCA	CD74HCT243	
	Signetics	**74HCT243**	**1158**
	TI	SN74HCT243	
	Universal	US74HCT243	
HD74HCT244	CTI	74HCT244	
	Micrel	MIC74HCT244	
	MicroTech	74HCTR244	
	Mitel	MD74HCT244	
	Motorola	MC74HCT244	
	National	MM74HCT244	
	Nitron	NC74HCT244	
	Plessey	MV74HCT244	
HD74HCT244	**RCA**	**CD74HCT244**	**1149**
	SPI	SP74HCT244	
	SGS	M74HCT244	
	Signetics	**74HCT244**	**1158**
	SSS	SS74HCT244	
	Supertex	SI74HCT244	
	TI	SN74HCT244	
	Toshiba	**TC74HCT244**	**1363**
	Universal	US74HCT244	
	Zytrex	ZX74HCT244-2	
HD74HCT245	CTI	74HCT245	
	GTEMicro	G74SC245	
	Micrel	MIC74HCT245	
	MicroTech	74HCTR245	
	Mitel	MD74HCT245	
	Motorola	MC74HCT245	
	National	MM74HCT245	
	Plessey	MV74HCT245	
		MV74SC245	
	RCA	**CD74HCT245**	**1149**
	SPI	SP74HCT245	
	SGS	M74HCT245	
	Signetics	**74HCT245**	**1158**
	SSS	SS74HCT245	
	TI	SN74HCT245	
	Toshiba	**TC74HCT245**	**1363**
	Universal	US74HCT245	
HD74HCT373	CTI	74HCT373	
	GTEMicro	G74SC373	
	Micrel	MIC74HCT373	
	MicroTech	74HCTR373	
	Mitel	MD74HCT373	
	Motorola	MC74HCT373	
	National	MM74HCT373	
	Nitron	NC74HCT373	
	Plessey	MV74HCT373	
		MV74SC373	
	RCA	**CD74HCT373**	**1150**
	SPI	SP74HCT373	
	SGS	M74HCT373	
	Signetics	**74HCT373**	**1158**
	SSS	SS74HCT373	
	Supertex	SI74HCT373	
	TI	SN74HCT373	
	Toshiba	**TC74HCT373**	**1363**
	Universal	US74HCT373	
	Zytrex	ZX74HCT373-2	
HD74HCT374	CTI	74HCT374	
	GTEMicro	G74SC374	
	Micrel	MIC74HCT374	
	MicroTech	74HCTR374	
	Mitel	MD74HCT374	
	Motorola	MC74HCT374	
	National	MM74HCT374	
	Nitron	NC74HCT374	
	Plessey	MV74HCT374	
		MV74SC374	
	RCA	CD74HCT374	
	SPI	SP74HCT374	
	SGS	M74HCT374	
	Signetics	**74HCT374**	**1158**
	SSS	SS74HCT374	
	Supertex	SI74HCT374	
	TI	SN74HCT374	
	Toshiba	**TC74HCT374**	**1363**
	Universal	US74HCT374	
	Zytrex	ZX74HCT374-2	
HD74HCT533	CTI	74HCT533	
	Micrel	MIC74HCT533	
	MicroTech	74HCTR533	
	Motorola	MC74HCT533	
	Plessey	MV74HCT533	
	RCA	**CD74HCT533**	**1150**
	Signetics	**74HCT533**	**1159**
	SSS	SS74HCT533	
	TI	SN74HCT533	
	Universal	US74HCT533	
	Zytrex	ZX74HCT533	
HD74HCT534	CTI	74HCT534	
	Micrel	MIC74HCT534	
	MicroTech	74HCTR534	
	Motorola	MC74HCT534	
	Plessey	MV74HCT534	
	RCA	CD74HCT534	
	Signetics	**74HCT534**	**1159**
	SSS	SS74HCT534	
	TI	SN74HCT534	
	Universal	US74HCT534	
	Zytrex	ZX74HCT534-2	
HD74HCT540	CTI	74HCT540	
	Micrel	MIC74HCT540	
	MicroTech	74HCTR540	
HD74HCT540	Mitel	MD74HCT540	
	Motorola	MC74HCT540	
	Plessey	MV74HCT540	
	RCA	**CD74HCT540**	**1149**
	SPI	SP74HCT540	
	SGS	M74HCT540	
	Signetics	**74HCT540**	**1159**
	SSS	SS74HCT540	
	TI	SN74HCT540	
	Toshiba	**TC74HCT540**	**1363**
	Universal	US74HCT540	
	Zytrex	ZX74HCT540-2	
HD74HCT541	CTI	74HCT541	
	Micrel	MIC74HCT541	
	MicroTech	74HCTR541	
	Mitel	MD74HCT541	
	Motorola	MC74HCT541	
	Plessey	MV74HCT541	
	RCA	**CD74HCT541**	**1149**
	SPI	SP74HCT541	
	SGS	M74HCT541	
	Signetics	**74HCT541**	**1159**
	SSS	SS74HCT541	
	TI	SN74HCT541	
	Toshiba	**TC74HCT541**	**1363**
	Universal	US74HCT541	
	Zytrex	ZX74HCT541-2	
HD74HCT563	CTI	74HCT563	
	Micrel	MIC74HCT563	
	MicroTech	74HCTR563	
	Motorola	MC74HCT563	
	Plessey	MV74HCT563	
	RCA	**CD74HCT563**	**1150**
	SGS	M74HCT563	
	Signetics	**74HCT563**	**1159**
	SSS	SS74HCT563	
	TI	SN74HCT563	
	Toshiba	**TC74HCT563**	**1363**
	Universal	US74HCT563	
HD74HCT564	CTI	74HCT564	
	Micrel	MIC74HCT564	
	MicroTech	74HCTR564	
	Motorola	MC74HCT564	
	Plessey	MV74HCT564	
		MV74HCT573	
	RCA	CD74HCT564	
	SGS	M74HCT564	
	Signetics	**74HCT564**	**1159**
	SSS	SS74HCT564	
	TI	SN74HCT564	
	Toshiba	**TC74HCT564**	**1363**
	Universal	US74HCT564	
HD74HCT573	CTI	74HCT573	
	Micrel	MIC74HCT573	
	MicroTech	74HCTR573	
	Mitel	MD74HCT573	
	Motorola	MC74HCT573	
	RCA	**CD74HCT573**	**1150**
	SPI	SP74HCT573	
	SGS	M74HCT573	
	Signetics	**74HCT573**	**1159**
	SSS	SS74HCT573	
	TI	SN74HCT573	
	Toshiba	TC74HCT573	
	Universal	US74HCT573	
HD74HCT574	CTI	74HCT574	
	MicroTech	74HCTR574	
	Mitel	MD74HCT574	
	Motorola	MC74HCT574	
	Plessey	MV74HCT574	
	RCA	CD74HCT574	
	SPI	SP74HCT574	
	SGS	M74HCT574	
	Signetics	**74HCT574**	**1159**
	SSS	SS74HCT574	
	TI	SN74HCT574	
	Toshiba	**TC74HCT574**	**1363**
	Universal	US74HCT574	
		US75HCT574	
HD74HCT640	MicroTech	74HCTR640	
	Motorola	MC74HCT640	
	Nitron	NC74HCT640	
	RCA	**CD74HCT640**	**1149**
	SGS	M74HCT640	
	Signetics	**74HCT640**	**1159**
	SSS	SS74HCT640	
	TI	SN74HCT640	
	Toshiba	**TC74HCT640**	**1363**
	Universal	US74HCT640	
	Zytrex	ZX74HCT640-2	
HD74HCT643	MicroTech	74HCTR643	
	Motorola	MC74HCT643	
HD74HCT643	**RCA**	**CD74HCT643**	**1149**
	SGS	M74HCT643	
	Signetics	**74HCT643**	**1159**
	TI	SN74HCT643	
	Toshiba	**TC74HCT643**	**1363**
	Universal	US74HCT643	
	Zytrex	ZX74HCT643-2	
HD74HCT646	Nitron	NC74HCT646	
	RCA	**CD74HCT646**	**1149**
	SGS	M74HCT646	
	Signetics	**74HCT646**	**1159**
	TI	SN74HCT646	
	Toshiba	**TC74HCT646**	**1363**
	Universal	US74HCT646	
HD74HCT648	**RCA**	**CD74HCT648**	**1149**
	SGS	M74HCT648	
	Signetics	**74HCT648**	**1159**
	TI	SN74HCT648	
	Toshiba	**TC74HCT648**	**1363**
	Universal	US74HCT648	
HD74HCT651	Motorola	MC74HCT651	
	TI	SN74HCT651	
	Toshiba	**TC74HCT651**	**1363**
HD74HCT652	Motorola	MC74HCT652	
	TI	SN74HCT652	
	Toshiba	**TC74HCT652**	**1363**
HD74LS00	**Fairchild**	**74LS00**	**5311**
	Motorola	**SN74LS00**	**1122**
	National	DM74LS00	
	Panasonic	DN74LS00	
	SGS	T74LS00	
	Signetics	**74LS00**	**1156**
	TI	SN74LS00	
HD74LS01	Fairchild	74LS01	
	Motorola	**SN74LS01**	**1122**
	National	DM74LS01	
	Panasonic	DN74LS01	
	Signetics	**74LS01**	**1156**
	TI	SN74LS01	
HD74LS02	**Fairchild**	**74LS02**	**5311**
	Motorola	**SN74LS02**	**1122**
	National	DM74LS02	
	Panasonic	DN74LS02	
	SGS	T74LS02	
	Signetics	**74LS02**	**1156**
	TI	SN74LS02	
HD74LS03	**Fairchild**	**74LS03**	**5311**
	Motorola	**SN74LS03**	**1122**
	National	DM74LS03	
	Panasonic	DN74LS03	
	SGS	T74LS03	
	TI	SN74LS03	
HD74LS04	**Fairchild**	**74LS04**	**5311**
	Motorola	**SN74LS04**	**1124**
	National	DM74LS04	
	Panasonic	DN74LS04	
	SGS	T74LS04	
	Signetics	**74LS04**	**1156**
	TI	SN74LS04	
HD74LS05	**Fairchild**	**74LS05**	**5311**
	Motorola	**SN74LS05**	**1124**
	National	DM74LS05	
	Panasonic	DN74LS05	
	SGS	T74LS05	
	Signetics	**74LS05**	**1156**
	TI	SN74LS05	
HD74LS08	**Fairchild**	**74LS08**	**5311**
	Motorola	**SN74LS08**	**1122**
	National	DM74LS08	
	Panasonic	DN74LS08	
	SGS	T74LS08	
	Signetics	**74LS08**	**1156**
	TI	SN74LS08	
HD74LS09	**Fairchild**	**74LS09**	**5311**
	Motorola	**SN74LS09**	**1122**
	National	DM74LS09	
	Panasonic	DN74LS09	
	SGS	T74LS09	
	TI	SN74LS09	
HD74LS10	**Fairchild**	**74LS10**	**5311**
	Motorola	**SN74LS10**	**1122**
	National	DM74LS10	
	Panasonic	DN74LS10	
	SGS	T74LS10	
	Signetics	**74LS10**	**1156**
	TI	SN74LS10	
HD74LS109	**Fairchild**	**74LS109**	**5311**
	Motorola	SN74LS109	
		SN74LS109A	**1126**
	National	DM74LS109	
	Panasonic	DN74LS109	
	SGS	T74LS109	

(Continued)

◆ Discontinued

Bold face device numbers indicate manufacturers data is provided in the IC Master on the pages noted.

ALTERNATE SOURCE DIRECTORY

Hitachi America, Ltd. (Cont'd)

Manufacturer Device	Replacement Source	Device	IC Master Page
HD74LS109	**Signetics**	**74LS109**	**1156**
	TI	SN74LS109A	
HD74LS11	**Fairchild**	**74LS11**	**5311**
	Motorola	**SN74LS11**	**1122**
	National	DM74LS11	
	Panasonic	DN74LS11	
	SGS	T74LS11	
	Signetics	**74LS11**	**1156**
	TI	SN74LS11	
HD74LS112	**Fairchild**	**74LS112**	**5311**
	Motorola	**SN74LS112A**	**1126**
	National	DM74LS112	
	Panasonic	DN74LS112	
	SGS	T74LS112	
	Signetics	**74LS112**	**1156**
	TI	SN74LS112A	
HD74LS113	**Fairchild**	**74LS113**	**5311**
	Motorola	**SN74LS113A**	**1126**
	National	DM74LS113	
	Panasonic	DN74LS113	
	SGS	T74LS113	
	Signetics	**74LS113**	**1156**
	TI	SN74LS113A	
HD74LS114	**Fairchild**	**74LS114**	**5311**
	Motorola	**SN74LS114A**	**1126**
	National	DM74LS114	
	Panasonic	DN74LS114	
	SGS	T74LS114	
	Ti	SN74LS114A	
HD74LS12	**Motorola**	**SN74LS12**	**1122**
	National	DM74LS12	
	Panasonic	DN74LS12	
	Signetics	74LS12	
	TI	SN74LS12	
◆HD74LS122	**Motorola**	**SN74LS122**	**1131**
	National	DM74LS122	
	TI	SN74LS122	
HD74LS123	**Motorola**	**SN74LS123**	**1131**
	National	DM74LS123	
	Panasonic	DN74LS123	
	TI	SN74LS123	
HD74LS13	**Fairchild**	**74LS13**	**5311**
	Motorola	**SN74LS13**	**1125**
	National	DM74LS13	
	Panasonic	DN74LS13	
	SGS	T74LS13	
	Signetics	**74LS13**	**1156**
	TI	SN74LS13	
HD74LS132	**Fairchild**	**74LS132**	**5311**
	Motorola	**SN74LS132**	**1125**
	National	DM74LS132	
	Panasonic	DN74LS132	
	SGS	T74LS132	
	Signetics	**74LS132**	**1157**
	TI	SN74LS132	
HD74LS136	**Fairchild**	**74LS136**	**5311**
	Motorola	**SN74LS136**	**1123**
	National	DM74LS136	
	Panasonic	DN74LS136	
	SGS	T74LS136	
	Signetics	**74LS136**	**1157**
	TI	SN74LS136	
HD74LS138	**Fairchild**	**74LS138**	**5311**
	Motorola	**SN74LS138**	**1130**
	National	DM74LS138	
	Panasonic	DN74LS138	
	SGS	T74LS138	
	Signetics	**74LS138**	**1157**
	TI	SN74LS138	
HD74LS139	**Fairchild**	**74LS139**	**5311**
	Motorola	**SN74LS139**	**1130**
	National	DM74LS139	
	Panasonic	DN74LS139	
	SGS	T74LS139	
	Signetics	**74LS139**	**1157**
	TI	SN74LS139A	
HD74LS14	**Fairchild**	**74LS14**	**5311**
	Motorola	**SN74LS14**	**1125**
	National	DM74LS14	
	Panasonic	DN74LS14	
	Signetics	**74LS14**	**1156**
	TI	SN74LS14	
HD74LS148	**Motorola**	**SN74LS148**	**1131**
	TI	SN74LS148	
◆HD74LS15	**Fairchild**	**74LS15**	**5311**
	Motorola	**SN74LS15**	**1122**
	National	DM74LS15	
	Panasonic	DN74LS15	
	SGS	T74LS15	
	TI	SN74LS15	
HD74LS151	**Fairchild**	**74LS151**	**5311**
	Hitachi	HD74LS151A	
	Motorola	**SN74LS151**	**1129**
	National	DM74LS151	
	Panasonic	DN74LS151	
	SGS	T74LS151	
	Signetics	**74LS151**	**1157**
	TI	SN74LS151	
HD74LS151A	**Fairchild**	**74LS151**	**5311**
	Hitachi	HD74LS151	
	Motorola	**SN74LS151**	**1129**
	National	DM74LS151	
	Panasonic	DN74LS151	
	SGS	T74LS151	
	Signetics	**74LS151**	**1157**
	TI	SN74LS151	
HD74LS152	Signetics	74LS152	
HD74LS153	**Fairchild**	**74LS153**	**5311**
	Motorola	**SN74LS153**	**1129**
	National	DM74LS153	
	Panasonic	DN74LS153	
	SGS	T74LS153	
	Signetics	**74LS153**	**1157**
	TI	SN74LS153	
HD74LS155	**Fairchild**	**74LS155**	**5311**
	Motorola	**SN74LS155**	**1130**
	National	DM74LS155	
	Panasonic	DN74LS155	
	Signetics	**74LS155**	**1157**
	TI	SN74LS155A	
HD74LS156	**Fairchild**	**74LS156**	**5311**
	Motorola	**SN74LS156**	**1130**
	National	DM74LS156	
	Panasonic	DN74LS156	
	SGS	T74LS156	
	Signetics	**74LS156**	**1157**
	TI	SN74LS156	
HD74LS157	**Fairchild**	**74LS157**	**5311**
	Motorola	**SN74LS157**	**1129**
	National	DM74LS157	
	Panasonic	DN74LS157	
	SGS	T74LS157	
	Signetics	**74LS157**	**1157**
	TI	SN74LS157	
HD74LS158	**Fairchild**	**74LS158**	**5311**
	Motorola	**SN74LS158**	**1129**
	National	DM74LS158	
	Panasonic	DN74LS158	
	SGS	T74LS158	
	Signetics	**74LS158**	**1157**
	TI	SN74LS158	
HD74LS160A	**Fairchild**	**74LS160**	**5311**
	Motorola	**SN74LS160A**	**1127**
	National	DM74LS160	
	Panasonic	DN74LS160A	
	SGS	T74LS160	
	Signetics	74LS160	
		74LS160A	**1157**
	TI	SN74LS160A	
HD74LS161A	Fairchild	74LS161A	
	Motorola	**SN74LS161A**	**1127**
	National	DM74LS161	
	Panasonic	DN74LS161A	
	SGS	T74LS161	
	Signetics	**74LS161A**	**1157**
	TI	SN74LS161A	
HD74LS162A	**Fairchild**	**74LS162**	**5311**
	Motorola	**SN74LS162A**	**1127**
	National	DM74LS162	
	Panasonic	DN74LS162A	
	SGS	T74LS162	
	Signetics	**74LS162A**	**1157**
	TI	SN74LS162A	
HD74LS163	**Fairchild**	**74LS163**	**5311**
	Hitachi	HD74LS163A	
	Motorola	**SN74LS163A**	**1127**
	National	DM74LS163	
	Panasonic	DN74LS163A	
	SGS	T74LS163	
	Signetics	**74LS163A**	**1157**
	TI	SN74LS163A	
HD74LS163A	**Fairchild**	**74LS163**	**5311**
	Hitachi	HD74LS163	
	Motorola	**SN74LS163A**	**1127**
	National	DM74LS163	
	Panasonic	DN74LS163A	
	SGS	T74LS163	
	Signetics	**74LS163A**	**1157**
	TI	SN74LS163A	
HD74LS164	**Fairchild**	**74LS164**	**5311**
	Motorola	SN74LS164A	
	National	DM74LS164	
			(Continued)
HD74LS164	Panasonic	DN74LS164	
	SGS	T74LS164	
	Signetics	**74LS164**	**1157**
		74LS164A	
	TI	SN74LS164	
HD74LS169	**Fairchild**	**74LS169**	**5311**
	Motorola	**SN74LS169**	**1127**
	National	DM74LS169	
	SGS	T74LS169	
	Signetics	**74LS169A**	**1157**
	TI	SN74LS169	
HD74LS174	**Fairchild**	**74LS174**	**5311**
	Motorola	**SN74LS174**	**1126**
	National	DM74LS174	
	Panasonic	DN74LS174	
	SGS	T74LS174	
	Signetics	**74LS174**	**1157**
	TI	SN74LS174	
HD74LS175	**Fairchild**	**74LS175**	**5311**
	Motorola	**SN74LS175**	**1126**
	Panasonic	DN74LS175	
	SGS	T74LS175	
	Signetics	74LS175	
	TI	SN74LS175	
HD74LS181	**Fairchild**	**74LS181**	**5311**
	Motorola	**SN74LS181**	**1132**
	SGS	T74LS181	
	Signetics	**74LS181**	**1157**
	TI	SN74LS181	
HD74LS183A	Fairchild	74LS83A	
	Hitachi	HD74LS83A	
	Motorola	**SN74LS83A**	**1132**
	National	DM74LS83A	
	Panasonic	DN74LS83A	
	SGS	T74LS83	
	Signetics	74LS83	
		74LS83A	**1156**
	TI	SN74LS83A	
HD74LS190	Fairchild	74LS190	
	Motorola	**SN74LS190**	**1127**
	National	DM74LS190	
	Panasonic	DN74LS190	
	SGS	T74LS190	
	TI	SN74LS190	
HD74LS191	Fairchild	74LS191	
	Motorola	**SN74LS191**	**1127**
	National	DM74LS191	
	Panasonic	DN74LS191	
	SGS	T74LS191	
	Signetics	**74LS191**	**1157**
	TI	SN74LS191	
HD74LS192	**Fairchild**	**74LS192**	**5311**
	Motorola	**SN74LS192**	**1127**
	National	DM74LS192	
	Panasonic	DN74LS192	
	SGS	T74LS192	
	Signetics	**74LS192**	**1157**
	TI	SN74LS192	
HD74LS193	**Fairchild**	**74LS193**	**5311**
	Motorola	**SN74LS193**	**1127**
	National	DM74LS193	
	Panasonic	DN74LS193	
	SGS	T74LS193	
	Signetics	**74LS193**	**1157**
	TI	SN74LS193	
HD74LS194A	**Fairchild**	**74LS194A**	**5311**
	Motorola	**SN74LS194A**	**1128**
	National	DM74LS194	
	Panasonic	DN74LS194A	
	SGS	T74LS194A	
	Signetics	**74LS194A**	**1157**
	TI	SN74LS194A	
HD74LS195A	**Fairchild**	**74LS195A**	**5311**
	Motorola	**SN74LS195A**	**1128**
	National	DM74LS195	
	Panasonic	DN74LS195A	
	SGS	L7924	
		T74LS195A	
	Signetics	**74LS195A**	**1157**
	TI	SN74LS195A	
HD74LS196	**Fairchild**	**74LS196**	**5311**
	Motorola	**SN74LS196**	**1127**
	National	DM74LS196	
	Panasonic	DN74LS196	
	SGS	574LS196	
	Signetics	N82S80	
	TI	SN74LS196	
HD74LS197	**Fairchild**	**74LS197**	**5311**
	Motorola	**SN74LS197**	**1127**
	National	DM74LS197	
	Panasonic	DN74LS197	
	SGS	T74LS197	
			(Continued)
HD74LS197	**Signetics**	**74LS197**	**1157**
	TI	SN74LS197	
HD74LS20	**Fairchild**	**74LS20**	**5311**
	Motorola	**SN74LS20**	**1122**
	National	DM74LS20	
	Panasonic	DN74LS20	
	SGS	T74LS20	
	Signetics	**74LS20**	**1156**
	TI	SN74LS20	
HD74LS21	**Fairchild**	**74LS21**	**5311**
	Motorola	**SN74LS21**	**1122**
	National	DM74LS21	
	Panasonic	DN74LS21	
	SGS	T74LS21	
	Signetics	**74LS21**	**1156**
	TI	SN74LS21	
HD74LS22	Fairchild	74LS22	
	Motorola	**SN74LS22**	**1122**
	National	DM74LS22	
	Panasonic	DN74LS22	
	SGS	T74LS22	
	TI	SN74LS22	
HD74LS221	Fairchild	74LS221	
	Motorola	**SN74LS221**	**1131**
	National	DM74LS221	
	TI	SN74LS221	
HD74LS240	**Fairchild**	**74LS240**	**5311**
	MMI	SN74LS240	
	Motorola	**SN74LS240**	**1124**
	Panasonic	DN74LS240	
	SGS	T74LS240	
	Signetics	**74LS240**	**1157**
	TI	SN74LS240	
HD74LS241	**Fairchild**	**74LS241**	**5311**
	MMI	SN74LS241	
	Motorola	**SN74LS241**	**1124**
	Panasonic	DN74LS241	
	SGS	T74LS241	
	Signetics	**74LS241**	**1157**
	TI	SN74LS241	
HD74LS244	**Fairchild**	**74LS244**	**5311**
	MMI	SN74LS244	
	Motorola	**SN74LS244**	**1124**
	Panasonic	DN74LS244	
	SGS	T74LS244	
	Signetics	**74LS244**	**1158**
	TI	SN74LS244	
HD74LS247	**Fairchild**	**74LS247**	**5311**
	Motorola	**SN74LS247**	**1130**
	National	DM74LS247	
	TI	SN74LS247	
HD74LS248	**Fairchild**	**74LS248**	**5311**
	Motorola	**SN74LS248**	**1130**
	National	DM74LS248	
	SGS	T74LS248	
	TI	SN74LS248	
HD74LS249	**Fairchild**	**74LS249**	**5311**
	Motorola	**SN74LS249**	**1130**
	National	DM74LS249	
	SGS	T74LS249	
	TI	SN74LS249	
HD74LS251	**Fairchild**	**74LS251**	**5311**
	Motorola	**SN74LS251**	**1129**
	National	DM74LS251	
	Panasonic	DN74LS251	
	SGS	T74LS251	
	Signetics	**74LS251**	**1158**
	TI	SN74LS251	
HD74LS253	**Fairchild**	**74LS253**	**5311**
	Motorola	**SN74LS253**	**1129**
	National	DM74LS253	
		DM8214	
	Panasonic	DN74LS253	
	SGS	T74LS253	
	Signetics	**74LS253**	**1158**
	TI	SN74LS253	
HD74LS257	Fairchild	74LS257A	
	Motorola	**SN74LS257A**	**1129**
	National	DM74LS257	
	SGS	T74LS257	
	Signetics	74LS257	
		74LS257A	**1158**
	TI	SN74LS257B	
HD74LS258	Fairchild	74LS258A	
	Motorola	**SN74LS258A**	**1129**
	National	DM74LS258	
	Panasonic	DN74LS258A	
	SGS	T74LS258	
	Signetics	74LS258	
	TI	SN74LS258B	
HD74LS26	**Fairchild**	**74LS26**	**5311**
	Motorola	**SN74LS26**	**1122**
			(Continued)

◆ Discontinued

The manufacturers report their devices can be used as direct replacements.
Performance details often differ, so compare the specifications considering your requirements.

Hitachi America, Ltd. (Cont'd)

Manufacturer Device	Replacement Source	Device	IC Master Page
HD74LS26	National	DM74LS26	
	Panasonic	DN74LS26	
	SGS	T74LS26	
	Signetics	**74LS26**	1156
	TI	SN74LS26	
HD74LS27	**Fairchild**	**74LS27**	5311
	Motorola	**SN74LS27**	1122
	National	DM74LS27	
	Panasonic	DN74LS27	
	SGS	T74LS27	
	Signetics	**74LS27**	1156
	TI	SN74LS27	
HD74LS279	**Fairchild**	**74LS279**	5311
	Motorola	**SN74LS279**	1126
	National	DM74LS279	
	Panasonic	DN74LS279	
	SGS	T74LS279	
	Signetics	74LS279	
	TI	SN74LS279A	
HD74LS280	**Motorola**	**SN74LS280**	1132
	Panasonic	DN74LS280	
	SGS	T74LS280	
	TI	SN74LS280	
HD74LS283	**Fairchild**	**74LS283**	5311
	Hitachi	HD74LS283A	
	Motorola	**SN74LS283**	1132
	National	DM74LS283	
	Panasonic	DN74LS283	
	SGS	T74LS283	
	Signetics	**74LS283**	1158
	TI	SN74LS283	
HD74LS283A	**Fairchild**	**74LS283**	5311
	Hitachi	HD74LS283	
	Motorola	**SN74LS283**	1132
	National	DM74LS283	
	Panasonic	DN74LS283	
	SGS	T74LS283	
	Signetics	**74LS283**	1158
	TI	SN74LS283	
HD74LS290	**Fairchild**	**74LS290**	5311
	Motorola	**SN74LS290**	1127
	National	DM74LS290	
	Panasonic	DN74LS290	
	SGS	T74LS290	
	Signetics	**74LS290**	1158
	TI	SN74LS290	
HD74LS293	**Fairchild**	**74LS293**	5311
	Motorola	**SN74LS293**	1127
	National	DM74LS293	
	Panasonic	DN74LS293	
	SGS	T74LS293	
	Signetics	**74LS293**	1158
	TI	SN74LS293	
HD74LS298	**Fairchild**	**74LS298**	5311
	Motorola	**SN74LS298**	1129
	SGS	T74LS298	
	Signetics	**74LS298**	1158
	TI	SN74LS298	
HD74LS299	AMD	SN74LS299	
	Fairchild	**74LS299**	5311
	Motorola	**SN74LS299**	1129
	SGS	T74LS299	
	TI	SN74LS299	
HD74LS30	**Fairchild**	**74LS30**	5311
	Motorola	**SN74LS30**	1122
	National	DM74LS30	
	Panasonic	DN74LS30	
	SGS	T74LS30	
	Signetics	**74LS30**	1156
	TI	SN74LS30	
HD74LS367	Fairchild	74LS367A	
	Hitachi	HD74LS367A	
	Motorola	**SN74LS367A**	1124
	National	DM74LS367	
	Panasonic	DN74LS367A	
	SGS	T74LS367	
		T74LS367A	
	Signetics	74LS367	
		74LS367A	1158
	TI	SN74LS367A	
HD74LS367A	Fairchild	74LS367A	
	Hitachi	HD74LS367	
	Motorola	**SN74LS367A**	1124
	National	DM74LS367	
	Panasonic	DN74LS367A	
	SGS	T74LS367	
		T74LS367A	
	Signetics	74LS367	
		74LS367A	1158
	TI	SN74LS367A	
HD74LS368	Fairchild	74LS368A	
	Motorola	**SN74LS368A**	1124
	National	DM74LS368	
	Panasonic	DN74LS368A	
	SGS	T74LS368	
	Signetics	74LS368	
		74LS368A	1158
	TI	SN74LS368A	
HD74LS37	**Fairchild**	**74LS37**	5311
	Motorola	**SN74LS37**	1122
	National	DM74LS37	
	Panasonic	DN74LS37	
	SGS	T74LS37	
	Signetics	**74LS37**	1156
	TI	SN74LS37	
HD74LS38	**Fairchild**	**74LS38**	5311
	Motorola	**SN74LS38**	1122
	National	DM74LS38	
	Panasonic	DN74LS38	
	SGS	T74LS38	
	Signetics	**74LS38**	1156
	TI	SN74LS38	
HD74LS386	**Motorola**	**SN74LS386**	1123
	National	DM74LS386	
	Panasonic	DN74LS386	
	TI	SN74LS386A	
HD74LS40	**Fairchild**	**74LS40**	5311
	Motorola	**SN74LS40**	1122
	National	DM74LS40	
	Panasonic	DN74LS40	
	SGS	T74LS40	
	Signetics	**74LS40**	1156
	TI	SN74LS40	
HD74LS42	**Fairchild**	**74LS42**	5311
	Motorola	**SN74LS42**	1130
	National	DM74LS42	
	Panasonic	DN74LS42	
	SGS	T74LS42	
	Signetics	**74LS42**	1156
	TI	SN74LS42	
HD74LS47	**Fairchild**	**74LS47**	5311
	Motorola	**SN74LS47**	1130
	National	DM74LS47	
	SGS	T74LS47	
	TI	SN74LS47	
HD74LS48	**Fairchild**	**74LS48**	5311
	Motorola	**SN74LS48**	1130
	National	DM74LS48	
	SGS	T74LS48	
	Signetics	74LS48	
	TI	SN74LS48	
HD74LS49	Fairchild	74LS49	
	Motorola	**SN74LS49**	1130
	National	DM74LS49	
	SGS	T74LS49	
	TI	SN74LS49	
HD74LS51	**Fairchild**	**74LS51**	5311
	Motorola	**SN74LS51**	1123
	National	DM74LS51	
	Panasonic	DN74LS51	
	SGS	T74LS51	
	Signetics	**74LS51**	1156
	TI	SN74LS51	
HD74LS54	**Fairchild**	**74LS54**	5311
	Motorola	**SN74LS54**	1123
	National	DM74LS54	
	Panasonic	DN74LS54	
	SGS	T74LS54	
	Signetics	**74LS54**	1156
	TI	SN74LS54	
HD74LS55	**Fairchild**	**74LS55**	5311
	Motorola	**SN74LS55**	1123
	National	DM74LS55	
	Panasonic	DN74LS55	
	SGS	T74LS55	
	TI	SN74LS55	
HD74LS73	**Motorola**	**SN74LS73A**	1126
	National	DM74LS73	
	Panasonic	DN74LS73	
	Signetics	**74LS73**	1156
	TI	SN74LS73A	
HD74LS74	**Fairchild**	**74LS74**	5311
	Hitachi	HD74LS74A	
	Motorola	**SN74LS74A**	1126
	National	DM74LS74	
	Panasonic	DN74LS74A	
	SGS	T74LS74	
	Signetics	74LS74	
	TI	SN74LS74A	
HD74LS74A	**Fairchild**	**74LS74**	5311
	Hitachi	HD74LS74	
	Motorola	**SN74LS74A**	1126
		(Continued)	
HD74LS74A	National	DM74LS74	
	Panasonic	DN74LS74A	
	SGS	T74LS74	
	Signetics	74LS74	
	TI	SN74LS74A	
HD74LS75	**Motorola**	**SN74LS75**	1126
	National	DM74LS75	
	Panasonic	DN74LS75	
	Signetics	**74LS75**	1156
	TI	SN74LS75	
HD74LS76	**Motorola**	**SN74LS76A**	1126
	National	DM74LS76	
	Panasonic	DN74LS76	
	Signetics	**74LS76**	1156
	TI	SN74LS76A	
HD74LS78	**Motorola**	**SN74LS78A**	1126
	National	DM74LS78	
	Panasonic	DN74LS78	
	TI	SN74LS78A	
HD74LS83A	Fairchild	74LS83A	
	Hitachi	HD74LS183A	
	Motorola	**SN74LS83A**	1132
	National	DM74LS83A	
	Panasonic	DN74LS83A	
	SGS	T74LS83	
	Signetics	74LS83	
		74LS83A	1156
	TI	SN74LS83A	
HD74LS85	**Fairchild**	**74LS85**	5311
	Motorola	**SN74LS85**	1131
	National	DM74LS85	
	Panasonic	DN74LS85	
	Signetics	**74LS85**	1156
	TI	SN74LS85	
HD74LS86	**Fairchild**	**74LS86**	5311
	Motorola	**SN74LS86**	1123
	National	DM74LS86	
	Panasonic	DN74LS86	
	SGS	T74LS86	
	Signetics	**74LS86**	1156
	TI	SN74LS86A	
HD74LS91	**Motorola**	**SN74LS91**	1128
	TI	SN74LS91	
HD74LS92	**Fairchild**	**74LS92**	5311
	Motorola	**SN74LS92**	1127
	National	DM74LS92	
	Panasonic	DN74LS92	
	SGS	T74LS92	
	Signetics	**74LS92**	1156
	TI	SN74LS92	
HD74LS93	**Fairchild**	**74LS93**	5311
	Motorola	**SN74LS93**	1127
	National	DM74LS93	
	Panasonic	DN74LS93	
	SGS	T74LS93	
	Signetics	**74LS93**	1156
	TI	SN74LS93	
HD74LS95B	**Fairchild**	**74LS95B**	5311
	Motorola	**SN74LS95B**	1128
	National	DM74LS95B	
	Panasonic	DN74LS95B	
	SGS	T74LS95	
		T74LS95B	
	Signetics	**74LS95B**	1156
	TI	SN74LS95B	
◆HD74S00	Fairchild	74S00	
	National	DM74S00	
	Signetics	**74S00**	1156
	TI	SN74S00	
◆HD74S02	Fairchild	74S02	
	National	DM74S02	
	Signetics	**74S02**	1156
	TI	SN74S02	
		SN74S32	
◆HD74S03	Fairchild	74S03	
	National	DM74S03	
	Signetics	**74S03**	1156
	TI	SN74S03	
◆HD74S04	Fairchild	74S04	
	National	DM74S04	
	Signetics	**74S04**	1156
	TI	SN74S04	
◆HD74S05	Fairchild	74S05	
	National	DM74S05	
	Signetics	**74S05**	1156
	TI	SN74S05	
◆HD74S10	Fairchild	74S10	
	National	DM74S10	
	Signetics	**74S10**	1156
	TI	SN74S10	
◆HD74S11	Fairchild	74S11	
	National	DM74S11	
		(Continued)	
◆HD74S11	**Signetics**	**74S11**	1156
	TI	SN74S11	
◆HD74S112	Fairchild	74S112	
	Motorola	SN74S112	
	National	DM74S112	
	Signetics	**74S112**	1156
	TI	SN74S112	
◆HD74S113	Fairchild	74S113	
	National	DM74S113	
	Signetics	**74S113**	1156
	TI	SN74S113	
◆HD74S114	National	DM74S114	
	TI	SN74S114	
◆HD74S133	Fairchild	74S133	
	National	DM74S133	
	Signetics	**74S133**	1157
	TI	SN74S133	
◆HD74S134	National	DM74S134	
	Signetics	**74S134**	1157
	TI	SN74S134	
◆HD74S135	Fairchild	74S135	
	National	DM74S135	
	Signetics	**74S135**	1157
	TI	SN74S135	
◆HD74S140	Fairchild	74S140	
	National	DM74S140	
	Signetics	**74S140**	1157
	TI	SN74S140	
◆HD74S15	Fairchild	74S15	
	National	DM74S15	
	TI	SN74S15	
◆HD74S182	Fairchild	74S182	
	MMI	SN74S182	
	National	DM74S182	
	Signetics	**74S182**	1157
	TI	SN74S182	
◆HD74S189	AMD	AM27LS03	
		AM27S03	
		SN74S189	
	Cypress	CY27S03	
		CY74S189	
		CY7C189	
		CY7CS189	
	Fairchild	74S189	
		93405	
	National	DM74S189	
		DM7599	
		DM8599	
	TI	SN74S189B	
◆HD74S20	Fairchild	74S20	
	National	DM74S20	
	Signetics	**74S20**	1156
	TI	SN74S20	
◆HD74S22	Fairchild	74S22	
	National	DM74S22	
	TI	SN74S22	
◆HD74S251	AMD	SN74S251	
	National	DM74S251	
	Signetics	**74S251**	1158
	TI	SN74S251	
◆HD74S280	National	DM74S280	
	Signetics	**74S280**	1158
	TI	SN74S280	
◆HD74S289	Fairchild	7489	
	National	DM7489	
		DM74S289	
		DM8589	
		MM74S289	
	Signetics	74S289	
		N82S25	
	TI	SN74S289B	
◆HD74S40	Fairchild	74S40	
	National	DM74S40	
	Signetics	**74S40**	1156
	TI	SN74S40	
◆HD74S51	Fairchild	74S51	
	National	DM74S51	
	Signetics	**74S51**	1156
	TI	SN74S51	
◆HD74S65	Fairchild	74S65	
	National	DM74S65	
	TI	SN74S65	
HD74S74	Fairchild	74S74	
	National	DM74S74	
	Signetics	**74S74**	1156
	TI	SN74S74	
◆HD74S86	Fairchild	74S86	
	National	DM74S86	
	Signetics	**74S86**	1156
	TI	SN74S86	
HD75107A	TI	SN75107A	
HD75108A	TI	SN75108A	

◆ Discontinued

Bold face device numbers indicate manufacturers data is provided in the IC Master on the pages noted.

Hitachi America, Ltd. (Cont'd)

Manufacturer Device	Replacement Source	Device	IC Master Page
◆HD75110	Fairchild	75110	
	Motorola	MC75110	
	National	LM75110	
	TI	SN75110A	
◆HD75154	Fairchild	75154	
	National	DS75154	
	TI	SN75154	
HD75450A	TI	SN75450B	
HD75451A	TI	SN75451B	
◆HD75452	Fairchild	75452	
	National	DS75452	
	SiliconG	SG75452	
	TI	SN75452B	
◆HD75453	Fairchild	75453	
	Motorola	MC75453	
	National	DS75453	
		LM75453	
	SiliconG	SG75453	
	TI	SN75453B	
HM100415	Cypress	CY7C162	
	Fairchild	**F100415**	**4014**
	IDT	IDT71982	
HM100422	**Fairchild**	**F100422**	**4014**
	Fujitsu	MB8118	
		MBM100422	
		MBM100422A	
	Hitachi	HM4816	
	Intel	2118	
	Mostek	MK4516	
	Motorola	MCM4517	
	National	DM100422	
		NMC5295	
	NEC	UPB100422	
	Signetics	100422	
		GBX100422	
◆HM100470	AT&T	WCM41256	
	Inmos	IMS2800	
	Motorola	MCM6256	
HM100474	AMD	AM100474	
	Fairchild	F100474	
	Fujitsu	MBM100474	
		MBM100474A	
	Hitachi	100474	
	NEC	UPB100474	
	Signetics	100474	
HM100480	AMD	AM100480	
	Fairchild	F100480	
	Fujitsu	MBM100480	
	NEC	UPB100480	
HM100484	AMD	AM100484	
	Fairchild	F100484	
	Fujitsu	MBM100484	
HM10414	AMD	AM99C641	
	Fairchild	F1600	
		F1601	
	Fujitsu	MB8171	
		MB81C71	
	Motorola	MCM6287	
◆HM10422	**Fairchild**	**F10422**	**4014**
	Fujitsu	MBM10422A	
	Motorola	**MCM10422**	**4123**
	National	DM10422	
	NEC	UPB10422	
	Signetics	10422	
HM10470	AMD	AM10470	
	Fujitsu	MBM10470A	
	Hitachi	HM2142	
	Motorola	MCM10470	
	National	DM10470	
	NEC	UPB10470	
	Signetics	10470	
HM10474	AMD	AM10474	
	Fairchild	F10474	
	Fujitsu	MBM10474A	
	Motorola	**MCM10474**	**4123**
	National	DM10474	
	NEC	UPB10474	
	Signetics	10474	
HM10480	AMD	AM10480	
	Fairchild	F10480	
	Fujitsu	**MBM10480**	**4021**
	NEC	UPB10480	
HM10484	AMD	HM10484	
	Fairchild	F10484	
	Fujitsu	MBM10484	
HM2110	AMD	AM10415	
	Fairchild	**F10415**	**4014**
	Fujitsu	MBM100470A	
		MBM10415	
	Hitachi	HM2112	
HM2110	**Motorola**	**MCM10146**	**4123**
	National	DM10415	
	Siemens	GXB10415	
	Signetics	10415	
HM2112	AMD	AM10415	
	Fairchild	**F10415**	**4014**
	Fujitsu	MBM100470A	
		MBM10415	
	Hitachi	HM2110	
	Motorola	**MCM10146**	**4123**
	National	DM10415	
	Siemens	GXB10415	
	Signetics	10415	
HM2142	AMD	AM10470	
	Fujitsu	MBM10470A	
	Hitachi	HM10470	
	Motorola	MCM10470	
	National	DM10470	
	NEC	UPB10470	
	Signetics	10470	
◆HM2148	AMD	AM2148	
		AM2149	
	Cypress	CY2148	
		CY2149	
		CY7C148	
		CY7C149	
	Intel	2148H	
		2149H	
	National	NMC2148	
	NEC	UPD2149	
	ThomsonCSF	ET2148	
	UMC	UM2148	
		UM2149	
HM25045	AMD	AM27S184	
	Fujitsu	MB7127	
	MMI	6388	
		6388-1	
	National	DM87S184	
	Signetics	N82S184	
	TI	TBP24SA81	
HM4334	Harris	HM6514	
	Hitachi	6148	
	Mitsubishi	58981	
	Motorola	6514	
	NEC	444	
	OKI	5114	
	RCA	MWS5514	
	Rockwell	R6514	
	Synertek	SY6514	
	Toshiba	TC5514	
HM435101	GouldAMI	S5101	
		S6501	
	Harris	MH6501	
	Intel	5101	
	Motorola	MCM5101	
		MCMS1L01	
	National	MM74C920	
	Panasonic	MNS101	
	RCA	**MWS5101**	**1673,1676**
	Sharp	LH5101	
	SSS	SCM5101	
	Synertek	SY2101	
	Toshiba	TC5501	
HM468A10	**Motorola**	**MCM68A10**	**4119**
HM4816	**Fairchild**	**F100422**	**4014**
	Fujitsu	MB8118	
		MBM100422	
		MBM100422A	
	Hitachi	HM100422	
	Intel	2118	
	Mostek	MK4516	
	Motorola	MCM4517	
	National	DM100422	
		NMC5295	
	NEC	UPB100422	
	Signetics	100422	
		GBX100422	
HM4827128	AMD	AM27128	
	Fujitsu	MBM27128	
	Intel	27128	
		27128A	**4074**
	Mitsubishi	M5L27128	
		M5L27C128	
	NEC	μPD27128	
	SEEQ	27128	
	SGS	M27128	
	TI	**TMS27C128**	**4210**
	Toshiba	TMM27128	
HM4827256	AMD	AM27256	
	Fujitsu	MBM27256	
		MBM27C256	
HM4827256	GI	R09256	
	Hitachi	HN27256	
		HN27C256	**4037**
	Intel	27256	
		27C256	**4079**
	Mitsubishi	M5L27256	
		MSL27256	
	Motorola	MCM67256	
	National	NMC27C256	
	NEC	MPD27256	
		UPD27256	
		UPD27C256	
		UPD27C256A	
	SEEQ	27256	
		27C256	
	SGS	M27256	
	SSS	SCM27C128	
	Toshiba	TC57256	
		TMM27256	
		TMM27C256	
	VTI	**VT27C256**	**4265,4273**
HM482764	AMD	AM2764	
	Fujitsu	MBM2764	
		MBM27C64	
	Hitachi	HN2764	
		HN27C64	
		HN482764	
	Intel	2764	
		2764A	
		27C64	**4078**
		87C64	**4078**
	Mitsubishi	M5L2764	
	NEC	UPD2764	
		UPD27C64	
	OKI	MSM2764	
		MSM2764A	**4732**
		MSM27C64	
	Rockwell	R2764	
		R27C64	
		R87C64	
	S-MOS	SPM27C64	
	SEEQ	2764	
		5133	
	SGS	M2764	
	Signetics	27C64	
	SSS	SCM27C64	
	TI	TMS27C64	
	ThomsonCSF	ET2764	
	Toshiba	**TMM2764**	**4263**
HM48416	Fujitsu	MB81416	
	Inmos	IMS2620	
	Mitsubishi	M5M4416	
	TI	TMS4416	
HM4864	Fairchild	F64K	
	Fujitsu	MB8264A	
		MB8266A	
	Inmos	IMS2600	
	MicronTech	MT4264	
	Motorola	MCM4164B	
		MCM6665B	
	National	NMC4164	
	NEC	μPD4164	
	OKI	MSM3764	
	ThomsonCSF	ET4164	
	Toshiba	TMM4164	
	Samsung	KM4164	
HM50256	AMD	MCM6256	
	AT&T	WCM41256	
	Fujitsu	MB81256	
	Hitachi	HM50257	
	MicronTech	MT1256	
	Mitsubishi	M5M4256	
		MSM4257	
	Motorola	MCM6256	
		MCM6257	
	NEC	MPD41257	
		μPD41256	
	OKI	M5M37256	
		MSM37256	
		MSM41256	
	Panasonic	MM41256	
	TI	TMS4257	
	Toshiba	TMM41256	
	Samsung	KM1256	
HM50257	AMD	MCM6256	
	AT&T	WCM41256	
	Fujitsu	MB81256	
	Hitachi	HM50256	
	MicronTech	MT1256	
	Mitsubishi	M5M4256	
		MSM4257	
HM50257	Motorola	MCM6256	
		MCM6257	
	NEC	MPD41257	
		μPD41256	
	OKI	M5M37256	
		MSM37256	
		MSM41256	
	Panasonic	MM41256	
	TI	TMS4257	
	Toshiba	TMM41256	
	Samsung	KM1256	
HM50464	Fujitsu	MB81464	
	Mitsubishi	MSM4464P	
	NEC	UPD41464C	
	Toshiba	TMM41464	
HM51101	Hitachi	HM51102	
	NEC	μPD411000	
		μPD411001	
	Toshiba	TC511001C	
HM51102	Hitachi	HM51101	
	NEC	μPD411000	
		μPD411001	
	Toshiba	TC511001C	
HM51258	Fujitsu	MB81C258	
HM53464	Fujitsu	MB81461	
	NEC	μPD41254	
	TI	TMS4461	
◆HM6116	AMD	AM9128	
		AM9218	
	Cypress	CY7C128	
	Fujitsu	MB8128	
		MB8416	
	Harris	HM6116	
		HM6516	
	IDT	IDT6116	
	Intel	2128	
	MicroPwr	MP6116	
	Mitsubishi	M58275	
		M5M116	
		M5M5116	
		M5M5117	
		M5M5118	
		MS8725	
	Motorola	MCM2016	
		MCM2016H	
		MCM2128	
		MCM6116	**4119**
		MCM61L16	**4119**
		MCM65116	
	National	MMC2116	
	NEC	μPD4016	
	OKI	MSM2128	
		MSM5128	**4732,4733**
	RCA	MWS6116A	
	SSS	883C21C16	
		BCM21C16	
		SCM21C16	
		SCM6116	
	TI	TMS4016	
	ThomsonCSF	ET2128	
	Toshiba	**TC5516A**	**4263**
		TMM2015A	
		TMM2016	
		TMM2016A	**4263**
	Samsung	KM6816	
	UMC	UM2128	
	Universal	US574HC133	
HM6117	Fujitsu	MB8418	
	NEC	μPD449	
	RCA	CDM6118	
	S-MOS	SRM2018	
	Toshiba	TC5518B	
	UMC	UM2167	
HM6147	Cypress	CY2147	
		CY7C147	
	Intel	2141	
		2147	
		2147-3	
	Motorola	MCM6147	
		MCM61L47	
	National	MM2147	
		NMC2141	
	NEC	MPD2147	
	OKI	MSM5104	
	TI	TMS2147	
	Toshiba	TMM3150	
	UMC	UM2147	
HM6147H	AMD	AM2147	
	Cypress	CY7C147	
	Intel	2147H	
	Motorola	MCM6147	

(Continued)

◆ Discontinued

The manufacturers report their devices can be used as direct replacements.
Performance details often differ, so compare the specifications considering your requirements.

Hitachi America, Ltd. (Cont'd)

Manufacturer Device	Replacement Source	Device	IC Master Page
HM6147H	National	NMC2147H	
	NEC	µPD2147A	
◆HM6148	AMD	AM2148	
		AM2149	
	Cypress	CY2148	
		CY2149	
		CY7C148	
		CY7C149	
	Intel	2148H	
		2149H	
	National	NMC2148	
	NEC	UPD2149	
	ThomsonCSF	ET2148	
	UMC	UM2148	
		UM2149	
HM6167	AMD	AM2167	
	Cypress	CY7C167	
	Fujitsu	MB8167A	
		MB81C67	
	Harris	HM65262	
	Hitachi	HM6167H	
		HM6267	
	Inmos	IMS1400	
		IMS1403	**4042**
	IDT	IDT6167	
	Intel	51C67	
	Mitsubishi	M5M2167	
	Motorola	MCM2167H	
	NEC	UPD2167	
HM6167H	AMD	AM2167	
	Cypress	CY7C167	
	Fujitsu	MB8167A	
		MB81C67	
	Harris	HM65262	
	Hitachi	HM6167	
		HM6267	
	Inmos	IMS1400	
		IMS1403	**4042**
	IDT	IDT6167	
	Intel	51C67	
	Mitsubishi	M5M2167	
	Motorola	MCM2167H	
	NEC	UPD2167	
HM6168	AMD	AM2168	
		AM99C68	
	Cypress	CY7C168	
	Fujitsu	MB8168	
	Inmos	IMS1420	
		IMS1421	
		IMS1423	
	IDT	IDT6168	
	Mitsubishi	M5M2168	
	Motorola	MCM6168	
	TI	TMS2168	
HM62256	Fujitsu	MB84256	
	NEC	UPD43256	
HM6264	AMD	AM9988	
		AM9988C	
	Cypress	CY7C186	
	Fujitsu	MB8464	
		MB8464A	
	Hitachi	HM6464	
	IDT	IDT7188	
		IDT7M864	
	Mitsubishi	M5M5165	
	Motorola	MCM6164	
	NEC	µPD4364	
		µPD4464	
	OKI	MSM5164	
		MSM5165	
	RCA	CDM6264	
	S-MOS	SRM2064	
		SRM2264	**4177,4178**
	Sharp	LH5164	
	Toshiba	TC5564	
		TC5565	
		TMM2063	
		TMM2064	
	Samsung	KM6264	
HM6267	AMD	AM2167	
	Cypress	CY7C167	
	Fujitsu	MB8167A	
		MB81C67	
	Harris	HM65262	
	Hitachi	HM6167	
		HM6167H	
	Inmos	IMS1400	
		IMS1403	**4042**
	IDT	IDT6167	
HM6267	Intel	51C67	
	Mitsubishi	M5M2167	
	Motorola	MCM2167H	
	NEC	UPD2167	
HM6287	Cypress	CY7C187	
	Fairchild	F1600	
	Hitachi	**HM6787**	**4035**
	Inmos	IMS1600	
	IDT	IDT7187	
	Motorola	MCM6287	
	NEC	MPD4361	
	RCA	**CD74HC4515**	**1150**
	SGS	M74HC4515	
	Signetics	PC74HC4515	
	Toshiba	TC5561	
		TC5562	
HM64456	Fujitsu	MB84256	
	NEC	µPD43256	
	Toshiba	**TC55257**	**4263**
HM6464	AMD	AM9988	
		AM9988C	
	Cypress	CY7C186	
	Fujitsu	MB8464	
		MB8464A	
	Hitachi	HM6264	
	IDT	IDT7188	
		IDT7M864	
	Mitsubishi	M5M5165	
	Motorola	MCM6164	
	NEC	µPD4364	
		µPD4464	
	OKI	MSM5164	
		MSM5165	
	RCA	CDM6264	
	S-MOS	SRM2064	
		SRM2264	**4177,4178**
	Sharp	LH5164	
	Toshiba	TC5564	
		TC5565	
		TMM2063	
		TMM2064	
	Samsung	KM6264	
HM65256	NEC	µPD42832	
	Toshiba	TMM41832	
HM6787	Cypress	CY7C187	
	Fairchild	F1600	
	Hitachi	HM6287	
	Inmos	IMS1600	
	IDT	IDT7187	
	Motorola	MCM6287	
	NEC	MPD4361	
	RCA	**CD74HC4515**	**1150**
	SGS	M74HC4515	
	Signetics	PC74HC4515	
	Toshiba	TC5561	
		TC5562	
HN25044	AMD	AM27S32	
	Fairchild	93452	
	Fujitsu	MB7121	
	MMI	5352-1	
		6352	**4102**
	National	DM54S572	
	Signetics	S82S136	
	TI	TBP24SA41M	
HN25045	AMD	AM27S33	
	Fairchild	93453	
	Fujitsu	MB7122	
	MMI	5353-1	
		535441	
		6353-1	
		63S441	**4101,4102**
		G35441	
	Motorola	**MCM7643**	**4124**
	National	DM74S573	
	NEC	UPB426	
	Signetics	N72HS137	
		N825137	
		N82S137	**4166**
		S82S195	
	TI	TBP24S41	
HN25085	AMD	27S185	
		AM27S185	
	Fujitsu	MB7128	
	MMI	5389	
		6389	**4102**
		6389-1	
		63S841	**4101,4102**
	Motorola	**MCM7685**	**4124**
	National	77S185	
		87S185	
		DM87S185	
HN25085	Raytheon	29651	
		29651A	**4134**
	Signetics	82S185	
		N82HS185	
		N82S185	**4166**
	TI	24S81	
		TBP24S81	
◆HN25088	AMD	AM27S180	
	Fujitsu	MB7131	
	MMI	6380-1	
	National	DM87S180	
		DM87S229	
	Signetics	N82S180	
	TI	TBP28SA86A	
HN25089	AMD	AM27S181M	
	Cypress	CY7C282M	
	Fairchild	932451	
		93451	
	Fujitsu	MB7132	
	Harris	7681	
	MMI	5381-1	
		6381	**4102**
		6381-1	
	Motorola	**MCM7681**	**4124**
	National	DM77S181	
		DM77S281	
		DM87S281	
	Raytheon	29631AM	
		29632	
	Signetics	82S181	
		NS82HS195	
		S82HS181	
		S82S181	
	TI	28S86	
		TBP28S86AM	
HN25168	AMD	AM27S190	
	Fairchild	937510	
	Fujitsu	MB7137	
	National	DM77S190	
		DM87S190	
	Signetics	S82S190	
	TI	TBP28SA166	
HN25169	AMD	27S191	
		AM27S191	
	Fairchild	932511	
	Fujitsu	MB7138	
	Harris	76161	
		HM76161	
	MMI	**63S1681**	**4101,4103**
	Motorola	MCM76101	
	National	77S191	
		87S191	
		DM87S191	
	Raytheon	**29681**	**4134**
	Signetics	82S191	
		N82S191	**4167**
	TI	28S166	
		TBP28S166	
HN25169S	EXEL	XL46C16	
	Fairchild	932511M	
	Fujitsu	MB7138E	
	Harris	HM6616	
		HM76161	
	MMI	**53S1681**	**4101**
	Motorola	**MCM76161**	**4124**
	National	DM77S191	
		DM77S191A	
		DM77S291	
		DM77S291A	
	Raytheon	**29681**	**4134**
		29681A	**4134**
		29683	**4134**
		29683A	**4134**
	ThomsonCSF	SFC71191A	
HN27256	AMD	AM27256	
	Fujitsu	MBM27256	
		MBM27C256	
	GI	R09256	
	Hitachi	HM4827256	
		HN27C256	**4037**
	Intel	27256	
		27C256	**4079**
	Mitsubishi	M5L27256	
		MSL27256	
	Motorola	MCM67256	
	National	NMC27C256	
	NEC	MPD27256	
		UPD27256	
		UPD27C256	
		UPD27C256A	
	SEEQ	27256	
HN27256	SEEQ	27C256	
	SGS	M27256	
	SSS	SCM27C128	
	Toshiba	TC57256	
		TMM27256	
		TMM27C256	
	VTI	**VT27C256**	**4265,4273**
HN27512	AMD	AM27512	
	Fujitsu	MBM27512	
		MBM27C512	
	Intel	**27512**	**4076**
	Mitsubishi	M5L27512	
	NEC	MPD27C512	
	Toshiba	**TMM27512**	**4263**
HN2764	AMD	AM2764	
	Fujitsu	MBM2764	
		MBM27C64	
	Hitachi	HM482764	
		HN27C64	
		HN482764	
	Intel	2764	
		2764A	
		27C64	**4078**
		87C64	**4078**
	Mitsubishi	M5L2764	
	NEC	UPD2764	
		UPD27C64	
	OKI	MSM2764	
		MSM2764A	**4732**
		MSM27C64	
	Rockwell	R2764	
		R27C64	
		R87C64	
	S-MOS	SPM27C64	
	SEEQ	2764	
		5133	
	SGS	M2764	
	Signetics	27C64	
	SSS	SCM27C64	
	TI	TMS27C64	
	ThomsonCSF	ET2764	
	Toshiba	**TMM2764**	**4263**
HN27C256	AMD	AM27256	
	Fujitsu	MBM27256	
		MBM27C256	
	GI	R09256	
	Hitachi	HM4827256	
		HN27256	
	Intel	27256	
		27C256	**4079**
	Mitsubishi	M5L27256	
		MSL27256	
	Motorola	MCM67256	
	National	NMC27C256	
	NEC	MPD27256	
		UPD27256	
		UPD27C256	
		UPD27C256A	
	SEEQ	27256	
		27C256	
	SGS	M27256	
	SSS	SCM27C128	
	Toshiba	TC57256	
		TMM27256	
		TMM27C256	
	VTI	**VT27C256**	**4265,4273**
HN27C64	AMD	AM2764	
	Fujitsu	MBM2764	
		MBM27C64	
	Hitachi	HM482764	
		HN2764	
		HN482764	
	Intel	2764	
		2764A	
		27C64	**4078**
		87C64	**4078**
	Mitsubishi	M5L2764	
	NEC	UPD2764	
		UPD27C64	
	OKI	MSM2764	
		MSM2764A	**4732**
		MSM27C64	
	Rockwell	R2764	
		R27C64	
		R87C64	
	S-MOS	SPM27C64	
	SEEQ	2764	
		5133	
	SGS	M2764	
	Signetics	27C64	

(Continued)

◆ Discontinued

Bold face device numbers indicate manufacturers data is provided in the IC Master on the pages noted.

Hitachi America, Ltd. (Cont'd)

Manufacturer Device	Replacement Source	Device	IC Master Page
HN27C64	SSS	SCM27C64	
	TI	TMS27C64	
	ThomsonCSF	ET2764	
	Toshiba	**TMM2764**	**4263**
HN462532	National	MM2532	
		NMC2532	
		TDA2530	
		TDA2532	
	Plessey	TDA2530	
	Siemens	TDA2530	
	SiliconG	SG2532	
HN462716	National	MM2716	
	OKI	MSM2716	
	SGS	M2716	
	ThomsonCSF	ET2716	
HN462732	AMD	AM2732	
	Intel	2732	
		2732A	
		M2732	
	National	MM2732	
		NMC2732	
	Rockwell	R27C32	
	SGS	M2732A	
	Toshiba	TMM324C	
HN46332	AMD	AM9232	
	CSG	MPS2332	
	Fairchild	F3532	
	GI	R03-9332	
	GouldAMI	S2333	
		S68A332	
	GTEMicro	G2332	
	Intech	IM7332	
	Intel	2332	
	Mitsubishi	M58333	
	Motorola	**MCM68A332**	**4120**
	National	NM52132	
	NCR	NCR2332	
	NEC	UPD2332A	
	Panasonic	MN2332	
	RCA	**CDM5333**	**1673,1677**
	Rockwell	R2332	
	SGS	M2332	
	Sharp	LH2332	
	Siemens	SA88332	
		SAB8332	
	Signetics	2332	
		2632A	
	SiliconG	SG3532	
	SSS	SCM23C32	
	SMC	ROM4732	
	Supertex	23SC32	
		CM3200	
	Synertek	SY2332	
	TI	TM2332	
		TMS2332	
		TMS4732	
	Toshiba	TMM2332	
		TMM333P	
	VTI	VT2332	
HN482764	AMD	AM2764	
	Fujitsu	MBM2764	
		MBM27C64	
	Hitachi	HM482764	
		HN2764	
		HN27C64	
	Intel	2764	
		2764A	
		27C64	**4078**
		87C64	**4078**
	Mitsubishi	M5L2764	
	NEC	UPD2764	
		UPD27C64	
	OKI	MSM2764	
		MSM2764A	**4732**
		MSM27C64	
	Rockwell	R2764	
		R27C64	
		R87C64	
	S-MOS	SPM27C64	
	SEEQ	2764	
		5133	
	SGS	M2764	
	Signetics	27C64	
	SSS	SCM27C64	
	TI	TMS27C64	
	ThomsonCSF	ET2764	
	Toshiba	**TMM2764**	**4263**
HN48364	AMD	9264	
	GI	R03-9364	
	GouldAMI	S68A364	
	Intech	IM7364	
	MicroPwr	MP2364C	
	Mitsubishi	M58334	
	Mostek	MK36000	
	Motorola	**MCM68364**	**4120**
		MCM68365	**4120**
		MCM68366	**4120**
	National	MM52164	
	NEC	UPD2364	
	Rockwell	R2364A	
	SGS	M2362	
		M36000	
	Signetics	2664	
		26S64	
	SSS	SCM23C64	
	SMC	ROM36000	
	Synertek	SY2364/A	
	TI	TMS4764	
	Toshiba	TMM2366	
HN58064	AMD	AM2864B	
		AM9864	
	EXEL	XL2864A	
		XLS2864A	
	Fujitsu	UBM28C64	
	SEEQ	2864	
	Xicor	**X2864A**	**734,4280**
HN613128	AMD	AM92128	
	GI	R09128	
		SPR-128	
	GouldAMI	S23128	
		S3630A	
	GTEMicro	G53128	
	Hitachi	HN613128P	
	Mitsubishi	M5M23128	
	Motorola	MCM63128	
	NCR	NCR23128	
	NEC	UPD23128	
		UPD23128A	
		UPD23128E	
		UPD23C128	
		UPD23C128E	
	RCA	**CDM53128**	**1673,1677**
	Rockwell	R23128	
	Signetics	23128	
	SSS	SCM23C128	
	Supertex	CM1310	
	Synertek	SY23128	
	Toshiba	TMM23128	
	UMC	UM23128	
	VTI	23131	
		VT23128	
		VT23129	
		VT23129A	
		VT23130	
		VT23138	
HN613128P	AMD	AM92128	
	GI	R09128	
		SPR-128	
	GouldAMI	S23128	
		S3630A	
	GTEMicro	G53128	
	Hitachi	HN613128	
	Mitsubishi	M5M23128	
	Motorola	MCM63128	
	NCR	NCR23128	
	NEC	UPD23128	
		UPD23128A	
		UPD23128E	
		UPD23C128	
		UPD23C128E	
	RCA	**CDM53128**	**1673,1677**
	Rockwell	R23128	
	Signetics	23128	
	SSS	SCM23C128	
	Supertex	CM1310	
	Synertek	SY23128	
	Toshiba	TMM23128	
	UMC	UM23128	
	VTI	23131	
		VT23128	
		VT23129	
		VT23129A	
		VT23130	
		VT23138	
HN613256	AMD	AM92256	
	Fujitsu	MB83256	
	GI	R09256	
	GouldAMI	S23256	
		S38256	
	GTEMicro	G53256	
	Mitsubishi	M5M23256	
	Mostek	MK38000	
	Motorola	MCM63256	
		MCM65256	
	NCR	NCR23256	
		NCR23257	
	NEC	UPD23256	
		UPD23256A	
		UPD23C256E	
	OKI	**MSM38256**	**4733**
	Panasonic	MN23256	
		MN23257	
	RCA	CDM52356	
		CDM53256	**1673,1678**
	S-MOS	**SMM2326**	**4178**
		SMM6325	**4178**
		SMM6326	**4178**
	Signetics	23256	
		23256A	
	SSS	SCM23C256	
	Supertex	CM2560	
	Toshiba	**TMM23256**	**4263**
	UMC	UM23256	
	VTI	23257	
		VT23256	
		VT23257	
HN61364	AMD	AM9265	
	Fairchild	F3568	
		F3569	
		F3570	
	GI	R03-9365	
		R09864	
	GouldAMI	S2364	
		S6364	
	GTEMicro	G5364	
	Intel	2364A	
	Mitsubishi	M5M2364	
		M5M2365	
		M5M23C64	
	Mostek	MK37000	
	Motorola	MCM68369	
		MCM68370	
	National	MM52264	
		NM52264	
	OKI	**MSM3864**	**4733**
	Panasonic	MN2364	
		MN4864	
	RCA	**CDM5365**	**1673,1677**
	Rockwell	R2364B	
	SSS	SCM23C65	
	Supertex	23SC64	
		23SC64/A	
		CM6400	
	Synertek	SY2365/A	
	TI	TMS2364	
		TMS4764	
	Toshiba	TMM2365	
	UMC	UM2366	
	VTI	VT2365	
HN62301	Fujitsu	MB831000	
		MB831124	
	GI	R091000	
	NEC	UPD23100	
		UPD231000	
	Toshiba	TC531000	
TDA2002	NEC	µPC2002	
	SGS	TDA2002	

Holt Inc.

Manufacturer Device	Replacement Source	Device	IC Master Page
HI8573	Motorola	MC14573	
HI8574	Motorola	MC14574	

Hughes Aircraft, Solid State Products

Manufacturer Device	Replacement Source	Device	IC Master Page
H7211	**Intersil**	**ICM7211**	**1091**
	Maxim	ICM7211	
	RCA	**CD22104**	**1147**
		CD22105	**1147**
	TeledyneS	TSC7211	
HCMP1802A	**RCA**	**CDP1802**	**1673**
HCMP1823	**RCA**	**CDP1823**	**1673,1676**
HCMP1824	**RCA**	**CDP1824**	**1673,1676**
HCMP1831	**RCA**	**CDP1831**	**1673,1677**
HCMP1832	**RCA**	**CDP1832**	**1673,1677**
HCMP1833	**RCA**	**CDP1833**	**1673,1677,1678**
HCMP1834	**RCA**	**CDP1834**	**1673,1677**
HCMP1835	RCA	CDP1835	
HCMP1837	RCA	CDP1837	
◆HCMP1851	**RCA**	**CDP1851**	**1673,1679**
HCMP1852	**RCA**	**CDP1852**	**1673,1679**
HCMP1853	**RCA**	**CDP1853**	**1673,1679**
◆HCMP1854	RCA	CDP1854	
HCMP1855	**RCA**	**CDP1855**	**1673,1679**
HCMP1856	**RCA**	**CDP1856**	**1673,1679**
HCMP1857	**RCA**	**CDP1857**	**1673,1679**
HCMP1858	**RCA**	**CDP1858**	**1673,1676,1679**
HCMP1859	**RCA**	**CDP1859**	**1673,1676,1679**
HLCD0438	GouldAMI	S4521	
	National	MM58438	
HLCD0538	National	MM58538	
HLCD0539	National	MM58539	
HLCD0540	National	MM58540	
HLCD0548	National	MM58548	
HLCD7211	Intersil	ICL7211	
	RCA	**CD22104**	**1147**
	TeledyneS	TSC7211	
◆HMPC1802	**RCA**	**CDP1802**	**1673**
HNVM3104A	GI	ER3400	

Hybrid Systems

Manufacturer Device	Replacement Source	Device	IC Master Page
ADC542	Burr-Brown	ADC82	
	HybridSys	HSADC82	
ADC581	AD	ADADC84	
		ADADC85	
		ADADC85S	
	Burr-Brown	ADC84	
		ADC85	
	Datel	ADC-84	
		ADC-85	
		ADC-87	
		ADC-HX12B	
		ADC-HZ12B	
		ADC-HZ12BGZ	
	HybridSys	ADC581B	
		HSADC85	
		HSADC85C	
	DDC	ADH-8585-1	
		DDC-5240	
		DDCADC85	
		DDCADC87	
	MicroNet	MN5240	
		MNADC84	
		MNADC85	
		MNADC87	**3203**
ADC581B	AD	ADADC84	
		ADADC85	
		ADADC85S	
	Burr-Brown	ADC84	
		ADC85	
	Datel	ADC-84	
		ADC-85	
		ADC-87	
		ADC-HX12B	
		ADC-HZ12B	
		ADC-HZ12BGZ	
	HybridSys	ADC581	
		HSADC85	
		HSADC85C	
	DDC	ADH-8585-1	
		DDC-5240	
		DDCADC85	
		DDCADC87	
	MicroNet	MN5240	
		MNADC84	
		MNADC85	
		MNADC87	**3203**
DAC331	AD	AD7541	
	Datel	**DAC-7541**	**3162**
	Harris	HI7541	
	HybridSys	HS7541	
	Intersil	AD7541	
		ICL7541	
	MicroPwr	MP7541	
		MP7621	

(Continued)

◆ Discontinued

The manufacturers report their devices can be used as direct replacements.
Performance details often differ, so compare the specifications considering your requirements.

Hybrid Systems (Cont'd)

Manufacturer Device	Replacement Source	Device	IC Master Page
DAC331	National	AD7521	
	Siliconix	SI7541	
	TeledyneP	TP7541	
DAC331-12	AD	AD7521	
	Datel	DAC-HA12B	
	Intersil	AD7521	
	MicroPwr	MP7521	
	National	AD7521	
		DAC1220	
		DAC1221	
		DAC1222	
DAC335	AD	ADDAC87	
	Burr-Brown	DAC851	
		DAC87	
	Datel	DAC-687	
		DAC-87	
	Harris	HI5687	
	HybridSys	HSDAC87	
	MicroNet	MNDAC87	
DAC346	AD	AD370	
		AD371	
	HybridSys	DAC347	
		DAC356	
	MicroNet	**MN370**	**3204**
		MN371	
DAC347	AD	AD370	
		AD371	
	HybridSys	DAC346	
		DAC356	
	MicroNet	**MN370**	**3204**
		MN371	
DAC349	**MicroNet**	**MN3349**	**3204**
DAC356	AD	AD370	
		AD371	
	HybridSys	DAC346	
		DAC347	
	MicroNet	**MN370**	**3204**
		MN371	
DAC370	MicroPwr	MP370	
DAC377-18	MicroPwr	MP377-18	
DAC397-12	HyComp	DA4000	
	DDC	ADH030	
DAC9331	MicroPwr	MP9331	
DAC9356	AD	ADDAC80	
		ADDAC85	
		DAC80	
	Burr-Brown	DAC80	
		DAC800	
		DAC85	
		DAC850	
	Datel	DAC-85	
		DAC-85C	
		DAC-HZ12B	
	Harris	HI5685	
	HybridSys	HSDAC80	
	MicroNet	**DAC80**	**3204**
		DAC85	
	National	DAC1280	
		DAC1285	
	TeledyneP	TPDAC80	
DAC9377	MicroPwr	MP9377	
DAC9377-16	MicroPwr	MP9377-16	
HS2020	**MicroNet**	**MN2020**	**3202**
HS3020	**MicroNet**	**MN3020**	**3204**
HS3120	AD	AD7622	
	MicroPwr	MP7622	
	Siliconix	MP7622	
HS3140	Datel	DAC-HA14	
	MicroPwr	MP3140	
HS3860	AD	AD3860	
	DDC	DAC-SL	
	MicroNet	**MN3860**	**3204**
HS5131	MicroNet	MN5131	
HS5150	**MicroNet**	**MN5150**	**3203**
HS5216	**Datel**	**ADC-5216**	**3160,3162**
	DDC	DDC-5216	
	MicroNet	MN5216	
HS5250	**MicroNet**	**MN5250**	**3203**
HS5251	MicroNet	MN5251	
HS5252	MicroNet	MN5252	
HS5253	MicroNet	MN5253	
HS574	AD	AD574	
	Burr-Brown	ADC574A	
	Datel	ADC574A	
	Harris	HI574A	
	MCE	MCE574	
	MicroNet	**MN574A**	**3203**
	MicroPwr	MP574	
	TeledyneP	TP574A	
HS7541	AD	AD7541	
	Datel	**DAC-7541**	**3162**
	Harris	HI7541	
	HybridSys	DAC331	
	Intersil	AD7541	
		ICL7541	
	MicroPwr	MP7541	
		MP7621	
	National	AD7521	
	Siliconix	SI7541	
	TeledyneP	TP7541	
HSADC82	Burr-Brown	ADC82	
	HybridSys	ADC542	
HSADC85	AD	ADADC84	
		ADADC85	
		ADADC85S	
	Burr-Brown	ADC84	
		ADC85	
	Datel	ADC-84	
		ADC-85	
		ADC-87	
		ADC-HX12B	
		ADC-HZ12B	
		ADC-HZ12BGZ	
	HybridSys	ADC581	
		ADC581B	
		HSADC85C	
	DDC	ADH-8585-1	
		DDC-5240	
		DDCADC85	
		DDCADC87	
	MicroNet	MN5240	
		MNADC84	
		MNADC85	
		MNADC87	**3203**
HSADC85C	AD	ADADC84	
		ADADC85	
		ADADC85S	
	Burr-Brown	ADC84	
		ADC85	
	Datel	ADC-84	
		ADC-85	
		ADC-87	
		ADC-HX12B	
		ADC-HZ12B	
		ADC-HZ12BGZ	
	HybridSys	ADC581	
		ADC581B	
		HSADC85	
	DDC	ADH-8585-1	
		DDC-5240	
		DDCADC85	
		DDCADC87	
	MicroNet	MN5240	
		MNADC84	
		MNADC85	
		MNADC87	**3203**
HSDAC80	AD	ADDAC80	
		ADDAC85	
		DAC80	
	Burr-Brown	DAC80	
		DAC800	
		DAC85	
		DAC850	
	Datel	DAC-85	
		DAC-85C	
		DAC-HZ12B	
	Harris	HI5685	
	HybridSys	DAC9356	
	MicroNet	**DAC80**	**3204**
		DAC85	
	National	DAC1280	
		DAC1285	
	TeledyneP	TPDAC80	
HSDAC87	AD	ADDAC87	
	Burr-Brown	DAC851	
		DAC87	
	Datel	DAC-687	
		DAC-87	
	Harris	HI5687	
	HybridSys	DAC335	
	MicroNet	MNDAC87	
MN5214	AD	AD5214	
	Datel	**ADC-5214**	**3160,3162**
	MicroNet	MN5214	
	TeledyneP	TP5214	
MUX201	AD	AD7503	
	Datel	**MV-808**	**3163**
	Harris	HI1818A	
	MicroPwr	MP7503	
R675-3	AD	AD2702	
	HyComp	HC2702	
		HC2712	
R675-4	AD	AD2700	
	HyComp	HC2700	
		HC2710	
R675-5	AD	AD2701	
	HyComp	HC2701	
		HC2710	
	Maxim	AD2701	

HyComp

Manufacturer Device	Replacement Source	Device	IC Master Page
DA4000	HybridSys	DAC397-12	
	DDC	ADH030	
HC1437	TeledyneP	1437	
HC2711	AD	AD2710	
	HyComp	HC201	
	Maxim	AD2710	
HC4000	DDC	ADH-030-11	

Hyundai Electronics America

Manufacturer Device	Replacement Source	Device	IC Master Page
HY93C46	GI	ER5911	
	National	COP495	
		NMC9346	
	NCR	59346	
		NCR59308	**4128**
	SGS	M9346	
	Sierra	SC22011	

Inmos Corporation

Manufacturer Device	Replacement Source	Device	IC Master Page
IMS1400	AMD	AM2167	
	Cypress	CY7C167	
	Fujitsu	MB8167A	
		MB81C67	
	Harris	HM65262	
	Hitachi	HM6167	
		HM6167H	
		HM6267	
	Inmos	**IMS1403**	**4042**
	IDT	IDT6167	
	Intel	51C67	
	Mitsubishi	M5M2167	
	Motorola	MCM2167H	
	NEC	UPD2167	
IMS1403	AMD	AM2167	
	Cypress	CY7C167	
	Fujitsu	MB8167A	
		MB81C67	
	Harris	HM65262	
	Hitachi	HM6167	
		HM6167H	
		HM6267	
	Inmos	IMS1400	
	IDT	IDT6167	
	Intel	51C67	
	Mitsubishi	M5M2167	
	Motorola	MCM2167H	
	NEC	UPD2167	
IMS1420	AMD	AM2168	
		AM99C68	
	Cypress	CY7C168	
	Fujitsu	MB8168	
	Hitachi	HM6168	
	Inmos	IMS1421	
		IMS1423	
	IDT	IDT6168	
	Mitsubishi	M5M2168	
	Motorola	MCM6168	
	TI	TMS2168	
IMS1421	AMD	AM2168	
		AM99C68	
	Cypress	CY7C168	
	Fujitsu	MB8168	
	Hitachi	HM6168	
	Inmos	IMS1420	
		IMS1423	
	IDT	IDT6168	
	Mitsubishi	M5M2168	
	Motorola	MCM6168	
	TI	TMS2168	
IMS1423	AMD	AM2168	
		AM99C68	
	Cypress	CY7C168	
	Fujitsu	MB8168	
	Hitachi	HM6168	
	Inmos	IMS1420	
		IMS1421	
	IDT	IDT6168	
	Mitsubishi	M5M2168	
IMS1423	Motorola	MCM6168	
	TI	TMS2168	
IMS1600	Cypress	CY7C187	
	Fairchild	F1600	
	Hitachi	HM6287	
		HM6787	**4035**
	IDT	IDT7187	
	Motorola	MCM6287	
	NEC	MPD4361	
	RCA	**CD74HC4515**	**1150**
	SGS	M74HC4515	
	Signetics	PC74HC4515	
	Toshiba	TC5561	
		TC5562	
IMS1620	Cypress	CY7C164	
	Hitachi	HD74HC595	
	Motorola	MC74HC595	
	NEC	MPD4362	
	SGS	M74HC595	
	TI	SN74HC595	
	Universal	US74HC595	
IMS2600	Fairchild	F64K	
	Fujitsu	MB8264A	
		MB8266A	
	Hitachi	HM4864	
	MicronTech	MT4264	
	Motorola	MCM4164B	
		MCM6665B	
	National	NMC4164	
	NEC	μPD4164	
	OKI	MSM3764	
	ThomsonCSF	ET4164	
	Toshiba	TMM4164	
	Samsung	KM4164	
IMS2600M	TI	SMJ4164	
IMS2620	Fujitsu	MB81416	
	Hitachi	HM48416	
	Mitsubishi	M5M4416	
	TI	TMS4416	
IMS2630	Intel	2187A	
	NEC	μPD4168	
IMS2800	AT&T	WCM41256	
	Motorola	MCM6256	

(Continued)

Intech Microcircuits Division

Manufacturer Device	Replacement Source	Device	IC Master Page
0405H	**AD**	**HDG-0405**	**3115**
0605H	**AD**	**HDG-0605**	**3115**
0805H	**AD**	**HDG-0805**	**3115**
		MDG	
DAC-HK12BGC	**Datel**	**DAC-HK12BGC**	**3160,3162**
DAC-HK12BMM	**Datel**	**DAC-HK12BMM**	**3160,3162**
DAS5712	DataTrans	DT5712	
DAS5714	DataTrans	DT5714	
DAS5716	DataTrans	DT5716	
IM7332	AMD	AM9232	
	CSG	MPS2332	
	Fairchild	F3532	
	GI	RO3-9332	
	GouldAMI	S2333	
		S68A332	
	GTEMicro	G2332	
	Hitachi	HN46332	
	Intel	2332	
	Mitsubishi	M58333	
	Motorola	**MCM68A332**	**4120**
	National	NM52132	
	NCR	NCR2332	
	NEC	UPD2332A	
	Panasonic	MN2332	
	RCA	**CDM5333**	**1673,1677**
	Rockwell	R2332	
	SGS	M2332	
	Sharp	LH2332	
	Siemens	SA88332	
		SAB8332	
	Signetics	2332	
		2632A	
	SiliconG	SG3532	
	SSS	SCM23C32	
	SMC	ROM4732	
	Supertex	23SC32	
		CM3200	
	Synertek	SY2332	
	TI	TM2332	
		TMS2332	
		TMS4732	
	Toshiba	TMM2332	

(Continued)

◆ Discontinued

Bold face device numbers indicate manufacturers data is provided in the IC Master on the pages noted.

Intech Microcircuits Division (Cont'd)

Manufacturer Device	Replacement Source	Device	IC Master Page
IM7332	Toshiba	TMM333P	
	VTI	VT2332	
IM7364	AMD	9264	
	GI	R03-9364	
	GouldAMI	S68A364	
	Hitachi	HN48364	
	MicroPwr	MP2364C	
	Mitsubishi	M58334	
	Mostek	MK36000	
	Motorola	**MCM68364**	**4120**
		MCM68365	**4120**
		MCM68366	**4120**
	National	MM52164	
	NEC	UPD2364	
	Rockwell	R2364A	
	SGS	M2362	
		M36000	
	Signetics	2664	
		26S64	
	SSS	SCM23C64	
	SMC	ROM36000	
	Synertek	SY2364/A	
	TI	TMS4764	
	Toshiba	TMM2366	
VDAC444	Brooktree	Bt444	

Integrated Device Technology

Manufacturer Device	Replacement Source	Device	IC Master Page
6116	Fujitsu	MB8416	
	Harris	HM65162	
	IDT	IDT6116	
	Mitsubishi	5117	
	Mostek	MK6116	
	National	6116	
	NEC	µPD446	
	Nitron	NC6116	
	OKI	**MSM5128**	**4732,4733**
	RCA	CDM6116	
	S-MOS	SRM2016	
	Toshiba	**TC5517A**	**4263**
		TC5517B	
7217	AMD	AM29517	
	Cypress	CY7C517	
	LogicDev	LMU17	
	Weitek	WTL2517	
IDT54HCT138	CTI	54HCT138	
	Mitel	MD54HCT138	
	Motorola	MC54HCT138	
	SPI	SP54HCT138	
	Signetics	54HCT138	
	SSS	SS54HCT138	
	TI	**SN54HCT138**	**714**
IDT54HCT139	CTI	54HCT139	
	Mitel	MD54HCT139	
	RCA	**CD54HCT139**	**1150**
	SPI	SP54HCT139	
	Signetics	54HCT139	
	SSS	SS54HCT139	
IDT6116	AMD	AM9128	
		AM9218	
	Cypress	CY7C128	
	Fujitsu	MB8128	
		MB8416	
	Harris	HM6116	
		HM6516	
	Intel	2128	
	MicroPwr	MP6116	
	Mitsubishi	M58275	
		M5M116	
		M5M5116	
		M5M5117	
		M5M5118	
		MS8725	
	Motorola	MCM2016	
		MCM2016H	
		MCM2128	
		MCM6116	**4119**
		MCM61L16	**4119**
		MCM65116	
	National	MMC2116	
	NEC	µPD4016	
	OKI	MSM2128	
		MSM5128	**4732,4733**
	RCA	MWS6116A	
	SSS	883C21C16	
		BCM21C16	
		SCM21C16	

(Continued)

Manufacturer Device	Replacement Source	Device	IC Master Page
IDT6116	SSS	SCM6116	
	TI	TMS4016	
	ThomsonCSF	ET2128	
	Toshiba	**TC5516A**	**4263**
		TMM2015A	
		TMM2016	
		TMM2016A	**4263**
	Samsung	KM6816	
	UMC	UM2128	
	Universal	US574HC133	
IDT6167	AMD	AM2167	
	Cypress	CY7C167	
	Fujitsu	MB8167A	
		MB81C67	
	Harris	HM65262	
	Hitachi	HM6167	
		HM6167H	
		HM6267	
	Inmos	IMS1400	
		IMS1403	**4042**
	Intel	51C67	
	Mitsubishi	M5M2167	
	Motorola	MCM2167H	
	NEC	UPD2167	
IDT7127	LogicDev	LMU17	
IDT7164	Cypress	CY7C186	
	RCA	**CD74HC4094**	**1149**
	SGS	M74HC4094	
	Signetics	PC74HC4094	
IDT71681	Cypress	CY7C171	
	RCA	**CD74HC4518**	**1150**
	SGS	M74HC4518	
	Signetics	PC74HC4518	
IDT71682	Cypress	CY7C172	
	Motorola	**MC74HC4543**	**1130**
	National	MM74HC4543	
	RCA	**CD74HC4543**	**1150**
	SGS	M74HC4543	
	Signetics	PC74HC4543	
	Toshiba	**TC74HC4543**	**1363**
	Universal	US74HC4543	
IDT7187	Cypress	CY7C187	
	Fairchild	F1600	
	Hitachi	HM6287	
		HM6787	**4035**
	Inmos	IMS1600	
	Motorola	MCM6287	
	NEC	MPD4361	
	RCA	**CD74HC4515**	**1150**
	SGS	M74HC4515	
	Signetics	PC74HC4515	
	Toshiba	TC5561	
		TC5562	
IDT7188	AMD	AM9988	
		AM9988C	
	Cypress	CY7C186	
	Fujitsu	MB8464	
		MB8464A	
	Hitachi	HM6264	
		HM6464	
	IDT	IDT7M864	
	Mitsubishi	M5M5165	
	Motorola	MCM6164	
	NEC	µPD4364	
		µPD4464	
	OKI	MSM5164	
		MSM5165	
	RCA	CDM6264	
	S-MOS	SRM2064	
		SRM2264	**4177,4178**
	Sharp	LH5164	
	Toshiba	TC5564	
		TC5565	
		TMM2063	
		TMM2064	
	Samsung	KM6264	
IDT7198	Cypress	CY7C166	
	Fairchild	F100182	
	Hitachi	HD100182	
IDT71981	Cypress	CY7C161	
	Fairchild	F100183	
	Hitachi	HD100183	
IDT71982	Cypress	CY7C162	
	Fairchild	**F100415**	**4014**
	Hitachi	HM100415	
IDT7210	AMD	AM29510	
		AMD29510	
		AMD29L510	
	AD	ADSP1010	
		ADSP1010A	
	Cypress	CY7C510	

(Continued)

Manufacturer Device	Replacement Source	Device	IC Master Page
IDT7210	LogicDev	LMA1010	
	MicroPwr	**MP1010**	**688**
	TI	74HCT9510	
		SN74HCT9510	
	TRW-LSI	TDC1010	
		TDC2010	
		TMC2010	
		TMC2110	
	Weitek	WTL1010	
		WTL2010	
		WTL2044	
		WTL2245	
IDT7213	LogicDev	LMU13	
IDT7216	AMD	AM29516	
		AM29C516	
	AD	ADSP1016	
	LogicDev	LMU16	
	TRW-LSI	MPY016	
		MPY016K	
	Weitek	WTL1016	
		WTL1516	
		WTL2516	
IDT7217	AMD	AM29517	
		AM29C517	
	Cypress	CY7C517	
	LogicDev	LMU17	
	Weitek	WTL1517	
		WTL2517	
		WTL9517	
IDT74HCT138	CTI	74HCT138	
	Mitel	MD74HCT138	
	Motorola	MC74HCT138	
	Nitron	NC74HCT138	
	Plessey	MV74HCT138	
	RCA	**CD74HCT138**	**1150**
	SPI	SP74HCT138	
	SGS	M74HCT138	
	Signetics	**74HCT138**	**1157**
	SSS	SS74HCT138	
	TI	SN74HCT138	
	Toshiba	**TC74HCT138**	**1363**
	Zytrex	ZX74HCT138-2	
IDT74HCT139	Mitel	MD74HCT139	
	Nitron	NC74HCT139	
	Plessey	MV74HCT139	
	SPI	SP74HCT139	
	Signetics	**74HCT139**	**1157**
	Universal	US74HCT139	
	Zytrex	ZX74HCT139-2	
IDT7M164	Fairchild	F1600	
	Fujitsu	MB8171	
	Hitachi	HM6287	
	Inmos	IMS1600	
	Motorola	MCM6164	
	NEC	µPD4361	
	Toshiba	TC5561	
	VTI	VT64KD1	
IDT7M864	AMD	AM9988	
		AM9988C	
	Cypress	CY7C186	
	Fujitsu	MB8464	
		MB8464A	
	Hitachi	HM6264	
		HM6464	
	IDT	IDT7188	
	Mitsubishi	M5M5165	
	Motorola	MCM6164	
	NEC	µPD4364	
		µPD4464	
	OKI	MSM5164	
		MSM5165	
	RCA	CDM6264	
	S-MOS	SRM2064	
		SRM2264	**4177,4178**
	Sharp	LH5164	
	Toshiba	TC5564	
		TC5565	
		TMM2063	
		TMM2064	
	Samsung	KM6264	
IDT8M864	Toshiba	TMM5565	
	Samsung	KM6266	

Integrated Power Semiconductors

Manufacturer Device	Replacement Source	Device	IC Master Page
IP117	Fairchild	µA117	
	LinearTech	LM117	
	MCE	MCE-LM117	
	Motorola	**LM117**	**3625**
	SiliconG	SG117	

(Continued)

Manufacturer Device	Replacement Source	Device	IC Master Page
IP117	TI	LM117	
	ThomsonCSF	LM117	
		TDC0117	
	Unitrode	UC117	
IP120-12	National	LM120-12	
	SiliconG	SG120-12	
IP120-15	National	LM120-15	
	SiliconG	SG120-15	
IP120-5	Fairchild	µA7905	
		µA79M05	
	IPS	**IP320-5**	**3599**
		IP7905	**3599**
	Lambda	LµA7905	
	National	LM320MP5	
		LM7905	
		LM79M05	
	NEC	µPC7905	
	SiliconG	SG120-5	
		SG320-05	
		SG320P-5	
	TI	µA7905	
	Unitrode	UC7905	
IP123	Fairchild	SH123	
		UA138	
		µA123	
	LinearTech	LM123	
	Motorola	**LM123**	**3622**
		MC78T05	**3622**
	National	LM123	
	SiliconG	SG123	
IP123-12	**IPS**	**IP323-12**	**3599**
	Motorola	**MC78T12**	**3623**
IP123-15	**IPS**	**IP323-15**	**3599**
	Motorola	**MC78T15**	**3624**
IP123-5	Fairchild	SH0323	
		SH323	
		µA323	
		µA78H05	
	IPS	**IP323**	**3599**
	Lambda	LAS1405	
		LAS1905	
	LinearTech	LM323	
	Micropac	M78H05	
	Motorola	**LM323**	**3622**
		MC78T05C	**3622**
	SiliconG	SG323	
	ThomsonCSF	LM323	
IP137	LinearTech	LM137	
	MCE	MCE-LM137	
	Motorola	**LM137**	**3625**
	National	LM137	
	ThomsonCSF	LM137	
		TDC0137	
	Unitrode	UC137	
IP138	LinearTech	LM138	
	Micropac	MLM138	
	National	LM138	
IP140-12	Fairchild	µA7812	
	IPS	**IP340-12**	**3599**
		IP7812	**3599**
	Lambda	LMC7812	
		LµA7812	
	Motorola	**MC7812**	**3623**
	National	LM7812	
	NEC	µPC7812	
	SGS	L7812	
	SiliconG	SG340-12	
		SG7812	
	TI	µA7812	
	Toshiba	TA78012	
	Samsung	MC7812	
	Unitrode	UC7812	
IP140-15	Fairchild	µA7815	
		µA78L15	
	IPS	**IP340-15**	**3599**
		IP7815	**3599**
	Lambda	LAS1515	
		LMC7815	
		LµA7815	
	Motorola	**MC7815**	**3624**
		MC78L15	
	National	LM340-15	
		LM340LA-15	
		LM340T-15	
		LM7815	
		LM78L15	
	NEC	µPC7815	
		µPC78L15	
	SGS	L7815	
	SiliconG	SG340-15	
		SG7815	
	TI	LM340-15	

(Continued)

◆ Discontinued

The manufacturers report their devices can be used as direct replacements.
Performance details often differ, so compare the specifications considering your requirements.

Integrated Power Semiconductors (Cont'd)

Manufacturer Device	Replacement Source	Device	IC Master Page
IP140-15	TI	µA7815	
		µA78L15	
	ThomsonCSF	µA7815	
	Toshiba	TA78015	
	Samsung	MC7815	
	Unitrode	UC7815	
IP140-5	Fairchild	µA109	
	Motorola	LM109	
	National	LM109	
	SiliconG	SG109	
	ThomsonCSF	SFC2109	
IP150	LinearTech	LM150	
	Motorola	**LM150**	**3625**
	National	LM150	
	SiliconG	SG150	
	Unitrode	UC150	
IP1524	Cherry	CS1524	
	Exar	**XR1524**	**3558**
	LinearTech	LT1524	
	National	LM1524	
	RCA	CA1524	
	SGS	SG1524	
		UC1524A	
	SiliconG	SG1524	
	Sprague	ULS-8124	
	TI	**SG1524**	**720**
	Unitrode	**UC1524A**	**3739,3739**
IP1524B	Cherry	CS1524A	
IP1525A	Cherry	CS1525A	
	Exar	**XR1525A**	**3559**
	LinearTech	LT1525A	
	Motorola	**SG1525A**	**3626**
	SGS	SG1524A	
	SiliconG	SG1525A	
	Siliconix	PWM125	
	Sprague	ULS-8125	
	TI	SG1525A	
	Unitrode	**UC1525A**	**3739**
IP1526	**Motorola**	**SG1526**	**3626**
		SG3526	**3626**
	SiliconG	SG1526	
	Sprague	ULN8126	
		ULQ8126	
		ULS8126	
	Unitrode	UC1526	
IP1526A	**Signetics**	**SG1526A**	**3716,3730**
IP1527A	Cherry	CS1527A	
	LinearTech	LT1527A	
	Motorola	**SG1527A**	**3626**
	SGS	SG1527A	
	SiliconG	SG1527A	
	Siliconix	PWM27	
	Sprague	ULS-8125	
	TI	SG1527A	
	Unitrode	**UC1527A**	**3739**
IP1544	SiliconG	SG1544	
IP1842	**Unitrode**	**UC1842**	**3739**
IP1843	**Unitrode**	**UC1843**	**3739**
IP2007	TI	SN75077	
IP2064	Mitsubishi	M54532	
	Motorola	ULN2064	
	SGS	ULN2064	
	Sprague	ULN-2064	
	TI	SN75064	
		ULN2064	
	Toshiba	TD62064	
IP2065	Motorola	ULN2065	
	SGS	ULN2065	
	Sprague	ULN-2065	
	TI	SN75065	
		ULN2065	
IP2066	Motorola	ULN2066	
	SGS	ULN2066	
	Sprague	ULN-2066	
	TI	SN75066	
		ULN2066	
IP2067	Motorola	ULN2067	
	SGS	ULN2067	
	Sprague	ULN-2067	
	TI	SN75067	
		ULN2067	
IP2068	**Motorola**	**ULN2068**	**3212**
	SGS	ULN2068	
	Sprague	ULN-2068	
	TI	SN75068	
		ULN2068	
IP2069	Motorola	ULN2069	
	SGS	ULN2069	
	Sprague	ULN-2069	
	TI	SN75069	
		ULN2069	
IP2070	TI	SN75070	
IP2074	**Motorola**	**ULN2074**	**3212**
	SGS	ULN2074	
	Sprague	ULN-2074	
	TI	SN75074	
		ULN2074	
	Toshiba	TD62074	
IP2075	Motorola	ULN2075	
	SGS	ULN2075	
	Sprague	ULN-2075	
	TI	SN75075	
		ULN2075	
IP2076	TI	SN75076	
IP217	MCE	MCE-LM217	
	Motorola	**LM217**	**3625**
	National	LM217	
	SiliconG	SG217	
	TI	LM217	
	ThomsonCSF	TDE0117	
	Unitrode	UC217	
IP220-12	National	LM220-12	
	SiliconG	SG220-12	
IP220-15	National	LM220-15	
	SiliconG	SG220-15	
IP220-5	SiliconG	SG220-5	
IP223	Fairchild	SH223	
		µA223	
	Lambda	LLM223	
	Motorola	**LM223**	**3622**
	National	LM223	
	SiliconG	SG223	
	ThomsonCSF	TDE0123	
IP237	MCE	MCE-LM237	
	Motorola	**LM237**	**3625**
	National	LM237	
	TI	LM237	
	Unitrode	UC237	
IP238	SiliconG	SG238	
IP250	**Motorola**	**LM250**	**3625**
	National	LM250	
	SiliconG	SG250	
	Unitrode	UC250	
IP2524	Cherry	CS2524	
	Exar	XR2524	
	RCA	CA2524	
	SGS	SG2524	
		UC2524A	
	SiliconG	SG2524	
	Sprague	ULQ-8124	
	TI	SG2524	
	Unitrode	**UC2524A**	**3739,3739**
IP2524B	Cherry	CS2524A	
IP2525A	Cherry	CS2525A	
	Exar	XR2525A	
	LinearTech	LT2525A	
	Motorola	**SG2525A**	**3626**
	SiliconG	SG2525A	
	Siliconix	PWM25B	
	Sprague	ULQ-8125	
	TI	SG2525A	
	Unitrode	**UC2525A**	**3739**
IP2526	**Motorola**	**SG2526**	**3626**
	SiliconG	SG2526	
	Sprague	ULQ-8126	
	Unitrode	UC2526	
IP2526A	**Signetics**	**SG2526A**	**3716,3730**
IP2527A	Cherry	CS2527A	
	Exar	XR2527A	
	LinearTech	LT2527A	
	Motorola	**SG2527A**	**3626**
	SiliconG	SG2527A	
	TI	SG2527A	
	Unitrode	**UC2527A**	**3739**
IP2543	Exar	XR2543	
	SiliconG	SG2543	
IP2544	SiliconG	SG2544	
IP2842	**Unitrode**	**UC2842**	**3739**
IP2843	**Unitrode**	**UC2843**	**3739**
IP293	Polycore	PL293	
	SGS	L293	
IP317	Fairchild	µA317	
	LinearTech	LM317	
	MCE	MCE-LM317	
	Motorola	**LM317**	**3625**
	National	LM317	
			(Continued)
IP317	SGS	LM317	
	SiliconG	SG317	
	TI	LM317	
	ThomsonCSF	LM317	
		TDB0117	
	Unitrode	UC317	
IP320-12	Fairchild	µA7912	
		µA79M12	
	IPS	**IP7912**	**3599**
	Motorola	MC7912	
	National	LM320MP12	
		LM7912	
		LM79M12	
	NEC	µPC7912	
	SGS	L7912	
	SiliconG	SG320P-12	
		SG7912	
	TI	LM320-12	
		µA7912	
	ThomsonCSF	µA7912	
	Samsung	MC7912	
	Unitrode	UC7912	
IP320-15	Fairchild	µA7915	
	IPS	**IP7915**	**3599**
	Motorola	MC7915	
	National	LM320-15	
		LM320T15	
		LM7915	
	NEC	µPC7915	
	SGS	L7915	
	SiliconG	SG320-15	
		SG7915	
	TI	LM320-5	
		µA7915	
	ThomsonCSF	µA7915	
	Samsung	MC7915	
	Unitrode	UC7915	
IP320-5	Fairchild	µA7905	
		µA79M05	
	IPS	**IP120-5**	**3599**
		IP7905	**3599**
	Lambda	LµA7905	
	National	LM320MP5	
		LM7905	
		LM79M05	
	NEC	µPC7905	
	SiliconG	SG120-5	
		SG320-05	
		SG320P-5	
	TI	µA7905	
	Unitrode	UC7905	
IP323	Fairchild	SH0323	
		SH323	
		µA323	
		µA78H05	
	IPS	IP123-5	
	Lambda	LAS1405	
		LAS1905	
	LinearTech	LM323	
	Micropac	M78H05	
	Motorola	**LM323**	**3622**
		MC78T05C	**3622**
	SiliconG	SG323	
	ThomsonCSF	LM323	
IP323-12	**IPS**	**IP123-12**	**3599**
	Motorola	**MC78T12**	**3623**
IP323-15	**IPS**	**IP123-15**	**3599**
	Motorola	**MC78T15**	**3624**
IP33060	Motorola	MC33060	
IP33063	**Motorola**	**MC33063**	**3626**
IP337	LinearTech	LM337	
	MCE	MCE-LM337	
	Motorola	**LM337**	**3625**
	National	LM337	
	SiliconG	SG337	
	TI	LM337	
	ThomsonCSF	TDB0137	
	Unitrode	UC337	
IP338	LinearTech	LM338	
	Micropac	MLM338	
	National	LM338	
IP340-12	Fairchild	µA7812	
	IPS	**IP140-12**	**3599**
		IP7812	**3599**
	Lambda	LMC7812	
		LµA7812	
	Motorola	**MC7812**	**3623**
	National	LM7812	
	NEC	µPC7812	
	SGS	L7812	
	SiliconG	SG340-12	
		SG7812	
			(Continued)
IP340-12	TI	µA7812	
	Toshiba	TA78012	
	Samsung	MC7812	
	Unitrode	UC7812	
IP340-15	Fairchild	µA7815	
		µA78L15	
	IPS	**IP140-15**	**3599**
		IP7815	**3599**
	Lambda	LAS1515	
		LMC7815	
		LµA7815	
	Motorola	**MC7815**	**3624**
		MC78L15	
	National	LM340-15	
		LM340LA-15	
		LM340T-15	
		LM7815	
		LM78L15	
	NEC	µPC7815	
		µPC78L15	
	SGS	L7815	
	SiliconG	SG340-15	
		SG7815	
	TI	LM340-15	
		µA7815	
		µA78L15	
	ThomsonCSF	µA7815	
	Toshiba	TA78015	
	Samsung	MC7815	
	Unitrode	UC7815	
IP34060	**Motorola**	**MC34060**	**3626**
IP34063	**Motorola**	**MC34063**	**3626**
IP350	Fairchild	µA78HGA	
	Lambda	LAS14U	
		LAS19U	
	LinearTech	LM350	
	Motorola	**LM350**	**3625**
	National	LM350	
	SiliconG	SG350	
	TI	LM350	
IP35060	**Motorola**	**MC35060**	**3626**
IP35063	**Motorola**	**MC35063**	**3626**
IP3524	Cherry	CS3524	
	Exar	**XR3524**	**3558**
	IPS	**IP3524B**	**3599**
	National	LM3524	
	RCA	CA3524	
	SGS	SG3524	
		UC3524A	
	Signetics	**SG3524**	**3715,3720,3730**
	SiliconG	SG3524B	
	Sprague	ULN-8124	
	TI	SG3524	
	Unitrode	**UC3524A**	**3739,3739**
IP3524B	Cherry	CS3524A	
IP3525A	Exar	XR3525A	
	LinearTech	LT3525A	
	Motorola	**SG3525A**	**3626**
	SGS	SG3525A	
	SiliconG	SG3525A	
	Siliconix	PWM25	
	TI	SG3525A	
	Unitrode	**UC3525A**	**3739**
IP3526	SiliconG	SG3526	
	Sprague	ULN-8126	
	Unitrode	UC3526	
IP3526A	**Signetics**	**SG3526A**	**3716,3730**
IP3527	Cherry	CS3527	
		CS3527A	
	Exar	**XR3527A**	**3559**
	LinearTech	LT3527A	
	Motorola	**SG3527A**	**3626**
	SGS	SG3527A	
	SiliconG	SG3527A	
	TI	SG3527A	
IP3543	Exar	XR3543	
	SiliconG	SG3543	
IP3544	SiliconG	SG3544	
IP3842	**Unitrode**	**UC3842**	**3739**
IP3843	**Unitrode**	**UC3843**	**3739**
IP494	Cherry	CS594	
	Fujitsu	**MB3759**	**1611**
	Sprague	ULN-8194	
	TI	**TL494M**	**720**
		TL594M	**720**
	Unitrode	**UC494A**	**3739,3739**
IP494A	Cherry	CS494M	
	Exar	**XR494**	**3557**
	Fairchild	µA494	
			(Continued)

◆ Discontinued

Bold face device numbers indicate manufacturers data is provided in the IC Master on the pages noted.

Integrated Power Semiconductors (Cont'd)

Manufacturer Device	Replacement Source	Device	IC Master Page
IP494A	Motorola	TL494	
	Sprague	ULN8194A	
		ULS-8194	
	TI	**TL494M**	**720**
		TL594M	**720**
	Unitrode	**UC494A**	**3739,3739**
IP494AC	Cherry	CS594C	
IP494C	TI	TL494C	
		TL594C	
	Unitrode	**UC494AC**	**3739,3739**
IP5560	Cherry	CS5560S	
IP5560C	Cherry	CS5560N	
	Signetics	**NE5560**	**3713,3730**
IP5561	Cherry	CS5561S	
	Signetics	**SE5561**	**3713,3730**
	Sprague	ULS-8161	
IP5561C	Cherry	CS5561	
		CS5561N	
	Signetics	**NE5561**	**3713,3730**
	Sprague	ULN-8161	
IP7805	National	LM340-5	
	SiliconG	SG7805	
	Samsung	MC7805	
	Unitrode	UC7805	
IP780SAC	Motorola	TL780-05C	
	TI	TL780-05C	
IP7812	Fairchild	μA7812	
	IPS	**IP140-12**	**3599**
		IP340-12	**3599**
	Lambda	LMC7812	
		LμA7812	
	Motorola	**MC7812**	**3623**
	National	LM7812	
	NEC	μPC7812	
	SGS	L7812	
	SiliconG	SG340-12	
		SG7812	
	TI	μA7812	
	Toshiba	TA78012	
	Samsung	MC7812	
	Unitrode	UC7812	
IP7812AC	**Motorola**	**TL780-12C**	**3622,3623,3624**
	TI	TL780-12C	
IP7815	Fairchild	μA7815	
		μA78L15	
	IPS	**IP140-15**	**3599**
		IP340-15	**3599**
	Lambda	LAS1515	
		LMC7815	
		LμA7815	
	Motorola	**MC7815**	**3624**
		MC78L15	
	National	LM340-15	
		LM340LA-15	
		LM340T-15	
		LM7815	
		LM78L15	
	NEC	μPC7815	
		μPC78L15	
	SGS	L7815	
	SiliconG	SG340-15	
		SG7815	
	TI	LM340-15	
		μA7815	
		μA78L15	
	ThomsonCSF	μA7815	
	Toshiba	TA78015	
	Samsung	MC7815	
	Unitrode	UC7815	
IP7815AC	Motorola	TL	
	TI	TL780-15C	
IP7905	Fairchild	μA7905	
		μA79M05	
	IPS	**IP120-5**	**3599**
		IP320-5	**3599**
	Lambda	LμA7905	
	National	LM320MP5	
		LM7905	
		LM79M05	
	NEC	μPC7905	
	SiliconG	SG120-5	
		SG320-05	
		SG320P-5	
	TI	μA7905	
	Unitrode	UC7905	
IP7912	Fairchild	μA7912	
		μA79M12	
IP7912	**IPS**	**IP320-12**	**3599**
	Motorola	MC7912	
	National	LM320MP12	
		LM7912	
		LM79M12	
	NEC	μPC7912	
	SGS	L7912	
	SiliconG	SG320P-12	
		SG7912	
	TI	LM320-12	
		μA7912	
	ThomsonCSF	μA7912	
	Samsung	MC7912	
	Unitrode	UC7912	
IP7915	Fairchild	μA7915	
	IPS	**IP320-15**	**3599**
	Motorola	MC7915	
	National	LM320-15	
		LM320T15	
		LM7915	
	NEC	μPC7915	
	SGS	L7915	
	SiliconG	SG320-15	
		SG7915	
	TI	LM320-5	
		μA7915	
	ThomsonCSF	μA7915	
	Samsung	MC7915	
	Unitrode	UC7915	

Intel

Manufacturer Device	Replacement Source	Device	IC Master Page
2004	**NCR**	**NCR52004**	**4128,4130**
	Xicor	**X2004**	**735,4277**
2114	AMD	AM9114	
	Fairchild	F2114	
	Hitachi	HM472114	
	Intel	2114A	
	Mitsubishi	M5L2114	
	Motorola	M5L2114	
		MCM2114	
		MCM21L14	
	National	NMC2114A	
	OKI	MSM2114	
	SSS	SCM2114A	
		SCM21C14	
	Synertek	SY2114	
	Toshiba	TMM2114A	
		TMM314A	
	UMC	UM2114	
2118	**Fairchild**	**F100422**	**4014**
	Fujitsu	MB8118	
		MBM100422	
		MBM100422A	
	Hitachi	HM100422	
		HM4816	
	Mostek	MK4516	
	Motorola	MCM4517	
	National	DM100422	
		NMC5295	
	NEC	UPB100422	
	Signetics	100422	
		GBX100422	
2128	AMD	AM9128	
		AM9218	
	Cypress	CY7C128	
	Fujitsu	MB8128	
		MB8416	
	Harris	HM6116	
		HM6516	
	IDT	IDT6116	
	MicroPwr	MP6116	
	Mitsubishi	M58275	
		M5M116	
		M5M5116	
		M5M5117	
		M5M5118	
		MS8725	
	Motorola	MCM2016	
		MCM2016H	
		MCM2128	
		MCM6116	**4119**
		MCM61L16	**4119**
		MCM65116	
	National	MMC2116	
	NEC	μPD4016	
	OKI	MSM2128	
		MSM5128	**4732,4733**
	RCA	MWS6116A	
	SSS	883C21C16	
2128	SSS	BCM21C16	
		SCM21C16	
		SCM6116	
	TI	TMS4016	
	ThomsonCSF	ET2128	
	Toshiba	**TC5516A**	**4263**
		TMM2015A	
		TMM2016	
		TMM2016A	**4263**
	Samsung	KM6816	
	UMC	UM2128	
	Universal	US574HC133	
2141	Cypress	CY2147	
		CY7C147	
	Hitachi	HM6147	
	Intel	2147	
		2147-3	
	Motorola	MCM6147	
		MCM61L47	
	National	MM2147	
		NMC2141	
	NEC	MPD2147	
	OKI	MSM5104	
	TI	TMS2147	
	Toshiba	TMM3150	
	UMC	UM2147	
◆2142	National	MM2142	
2147	Cypress	CY2147	
		CY7C147	
	Hitachi	HM6147	
	Intel	2141	
		2147-3	
	Motorola	MCM6147	
		MCM61L47	
	National	MM2147	
		NMC2141	
	NEC	MPD2147	
	OKI	MSM5104	
	TI	TMS2147	
	Toshiba	TMM3150	
	UMC	UM2147	
2147-3	Cypress	CY2147	
		CY7C147	
	Hitachi	HM6147	
	Intel	2141	
		2147	
	Motorola	MCM6147	
		MCM61L47	
	National	MM2147	
		NMC2141	
	NEC	MPD2147	
	OKI	MSM5104	
	TI	TMS2147	
	Toshiba	TMM3150	
	UMC	UM2147	
2147H	AMD	AM2147	
	Cypress	CY7C147	
	Hitachi	HM6147H	
	Motorola	MCM6147	
	National	NMC2147H	
	NEC	μPD2147A	
2148H	AMD	AM2148	
		AM2149	
	Cypress	CY2148	
		CY2149	
		CY7C148	
		CY7C149	
	Intel	2149H	
	National	NMC2148	
	NEC	UPD2149	
	ThomsonCSF	ET2148	
	UMC	UM2148	
		UM2149	
2149H	AMD	AM2148	
		AM2149	
	Cypress	CY2148	
		CY2149	
		CY7C148	
		CY7C149	
	Intel	2148H	
	National	NMC2148	
	NEC	UPD2149	
	ThomsonCSF	ET2148	
	UMC	UM2148	
		UM2149	
◆2164	Fairchild	F64K	
	Fujitsu	MB8264A	
		MB8266A	
	Hitachi	HM4864	
	Inmos	IMS2600	
	MicronTech	MT4264	
	Motorola	MCM4164B	
◆2164	Motorola	MCM6665B	
	National	NMC4164	
	NEC	μPD4164	
	OKI	MSM3764	
	ThomsonCSF	ET4164	
	Toshiba	TMM4164	
	Samsung	KM4164	
2168	Fujitsu	MB8168	
	TI	TMS2168	
	UMC	UM2168	
2187A	Inmos	IMS2630	
	NEC	μPD4168	
2332	AMD	AM9232	
	CSG	MPS2332	
	Fairchild	F3532	
	GI	R03-9332	
	GouldAMI	S2333	
		S68A332	
	GTEMicro	G2332	
	Hitachi	HN46332	
	Intech	IM7332	
	Mitsubishi	M58333	
	Motorola	**MCM68A332**	**4120**
	National	NM52132	
	NCR	NCR2332	
	NEC	UPD2332A	
	Panasonic	MN2332	
	RCA	**CDM5333**	**1673,1677**
	Rockwell	R2332	
	SGS	M2332	
	Sharp	LH2332	
	Siemens	SA88332	
		SAB8332	
	Signetics	2332	
		2632A	
	SiliconG	SG3532	
	SSS	SCM23C32	
	SMC	ROM4732	
	Supertex	23SC32	
		CM3200	
	Synertek	SY2332	
	TI	TM2332	
		TMS2332	
		TMS4732	
	Toshiba	TMM2332	
		TMM333P	
	VTI	VT2332	
2364A	AMD	AM9265	
	Fairchild	F3568	
		F3569	
		F3570	
	GI	R03-9365	
		R09864	
	GouldAMI	S2364	
		S6364	
	GTEMicro	G5364	
	Hitachi	HN61364	
	Mitsubishi	M5M2364	
		M5M2365	
		M5M23C64	
	Mostek	MK37000	
	Motorola	MCM68369	
		MCM68370	
	National	MM52264	
		NM52264	
	OKI	**MSM3864**	**4733**
	Panasonic	MN2364	
		MN4864	
	RCA	**CDM5365**	**1673,1677**
	Rockwell	R2364B	
	SSS	SCM23C65	
	Supertex	23SC64	
		23SC64/A	
		CM6400	
	Synertek	SY2365/A	
	TI	TMS2364	
		TMS4764	
	Toshiba	TMM2365	
	UMC	UM2366	
	VTI	VT2365	
27128	AMD	AM27128	
	Fujitsu	MBM27128	
	Hitachi	HM4827128	
	Intel	**27128A**	**4074**
	Mitsubishi	M5L27128	
		M5L27C128	
	NEC	μPD27128	
	SEEQ	27128	
	SGS	M27128	

(Continued)

◆ Discontinued

The manufacturers report their devices can be used as direct replacements.
Performance details often differ, so compare the specifications considering your requirements.

Intel (Cont'd)

Manufacturer Device	Replacement Source	Device	IC Master Page
27128	**TI**	**TMS27C128**	**4210**
	Toshiba	TMM27128	
27128A	AMD	AM27128	
	Fujitsu	MBM27128	
	Hitachi	HM4827128	
	Intel	27128	
	Mitsubishi	M5L27128	
		M5L27C128	
	NEC	µPD27128	
	SEEQ	27128	
	SGS	M27128	
	TI	**TMS27C128**	**4210**
	Toshiba	TMM27128	
27256	AMD	AM27256	
	Fujitsu	MBM27256	
		MBM27C256	
	GI	R09256	
	Hitachi	HM4827256	
		HN27256	
		HN27C256	**4037**
	Intel	**27C256**	**4079**
	Mitsubishi	M5L27256	
		MSL27256	
	Motorola	MCM67256	
	National	NMC27C256	
	NEC	MPD27256	
		UPD27256	
		UPD27C256	
		UPD27C256A	
	SEEQ	27256	
		27C256	
	SGS	M27256	
	SSS	SCM27C128	
	Toshiba	TC57256	
		TMM27256	
		TMM27C256	
	VTI	**VT27C256**	**4265,4273**
2732	AMD	AM2732	
	Hitachi	HN462732	
	Intel	2732A	
		M2732	
	National	MM2732	
		NMC2732	
	Rockwell	R27C32	
	SGS	M2732A	
	Toshiba	TMM324C	
2732A	AMD	AM2732	
	Hitachi	HN462732	
	Intel	2732	
		M2732	
	National	MM2732	
		NMC2732	
	Rockwell	R27C32	
	SGS	M2732A	
	Toshiba	TMM324C	
27512	AMD	AM27512	
	Fujitsu	MBM27512	
		MBM27C512	
	Hitachi	HN27512	
	Mitsubishi	M5L27512	
	NEC	MPD27C512	
	Toshiba	**TMM27512**	**4263**
2764	AMD	AM2764	
	Fujitsu	MBM2764	
		MBM27C64	
	Hitachi	HM482764	
		HN2764	
		HN27C64	
		HN482764	
	Intel	2764A	
		27C64	**4078**
		87C64	**4078**
	Mitsubishi	M5L2764	
	NEC	UPD2764	
		UPD27C64	
	OKI	MSM2764	
		MSM2764A	**4732**
		MSM27C64	
	Rockwell	R2764	
		R27C64	
		R87C64	
	S-MOS	SPM27C64	
	SEEQ	2764	
		5133	
	SGS	M2764	
	Signetics	27C64	
	SSS	SCM27C64	
	TI	TMS27C64	
2764	ThomsonCSF	ET2764	
	Toshiba	**TMM2764**	**4263**
2764A	AMD	AM2764	
	Fujitsu	MBM2764	
		MBM27C64	
	Hitachi	HM482764	
		HN2764	
		HN27C64	
		HN482764	
	Intel	2764	
		27C64	**4078**
		87C64	**4078**
	Mitsubishi	M5L2764	
	NEC	UPD2764	
		UPD27C64	
	OKI	MSM2764	
		MSM2764A	**4732**
		MSM27C64	
	Rockwell	R2764	
		R27C64	
		R87C64	
	S-MOS	SPM27C64	
	SEEQ	2764	
		5133	
	SGS	M2764	
	Signetics	27C64	
	SSS	SCM27C64	
	TI	TMS27C64	
	ThomsonCSF	ET2764	
	Toshiba	**TMM2764**	**4263**
27C256	AMD	AM27256	
	Fujitsu	MBM27256	
		MBM27C256	
	GI	R09256	
	Hitachi	HM4827256	
		HN27256	
		HN27C256	**4037**
	Intel	27256	
	Mitsubishi	M5L27256	
		MSL27256	
	Motorola	MCM67256	
	National	NMC27C256	
	NEC	MPD27256	
		UPD27256	
		UPD27C256	
		UPD27C256A	
	SEEQ	27256	
		27C256	
	SGS	M27256	
	SSS	SCM27C128	
	Toshiba	TC57256	
		TMM27256	
		TMM27C256	
	VTI	**VT27C256**	**4265,4273**
27C64	AMD	AM2764	
	Fujitsu	MBM2764	
		MBM27C64	
	Hitachi	HM482764	
		HN2764	
		HN27C64	
		HN482764	
	Intel	2764	
		2764A	
		87C64	**4078**
	Mitsubishi	M5L2764	
	NEC	UPD2764	
		UPD27C64	
	OKI	MSM2764	
		MSM2764A	**4732**
		MSM27C64	
	Rockwell	R2764	
		R27C64	
		R87C64	
	S-MOS	SPM27C64	
	SEEQ	2764	
		5133	
	SGS	M2764	
	Signetics	27C64	
	SSS	SCM27C64	
	TI	TMS27C64	
	ThomsonCSF	ET2764	
	Toshiba	**TMM2764**	**4263**
2816A	EXEL	XL2816A	
	Rockwell	R5516A/2816A	
	SEEQ	2816A	
	Samsung	**KM2816A**	**4140**
2817A	EXEL	XL2817A	
	SEEQ	2817A	
	Samsung	KM2817A	
2864	AMD	AM9864	
	EXEL	XL48C64	
	Fujitsu	MBM28C65	
2910	TI	TCM4910	
2910A	**Harris**	**HC5510**	**3595**
	TI	TCM2910A	
2911	**Harris**	**HC5511**	**3595**
	TI	TMC2911A	
2912	GTEMicro	G8912B	
	Harris	**HC5512**	**3596**
	Intel	ID2912	
	National	TP3040	
	Plessey	MV8912	
	SGS	M5912	
	TI	TCM2912B	
2913	TI	TCM2913	
		TCM4913	
2914	TI	TCM2914	
		TCM4914	
29C51C	Harris	29C51C	
◆3245	Motorola	MC3245	
	National	DS3245	
◆3404	Signetics	N8T3404	
◆3604A	AMD	AM27S30	
	MMI	6340-1	
	National	DM74S475	
		DM77S475	
		DM87S475	
	Signetics	N82S140	
	TI	TBP28SA46	
◆3608	AMD	AM27S180	
	Fujitsu	MB7131	
	MMI	6380-1	
	National	DM87S180	
		DM87S229	
	Signetics	N82S180	
	TI	TBP28SA86A	
◆3624A	AMD	AM27S31	
	MMI	6341-1	
	Motorola	**MCM7641**	**4124**
	National	DM74S474	
	Signetics	N82S141	
	TI	TBP28S46	
5101	GouldAMI	S5101	
		S6501	
	Harris	MH6501	
	Hitachi	HM435101	
	Motorola	MCM5101	
		MCMS1L01	
	National	MM74C920	
	Panasonic	MNS101	
	RCA	**MWS5101**	**1673,1676**
	Sharp	LH5101	
	SSS	SCM5101	
	Synertek	SY2101	
	Toshiba	TC5501	
51C66	Cypress	CY7C167	
	Fujitsu	MB8164A	
	Hitachi	HM6167H	
	Inmos	IMS1400	
	Intel	51C67	
	NEC	µPD2167	
		µPD4311	
51C67	AMD	AM2167	
	Cypress	CY7C167	
	Fujitsu	MB8167A	
		MB81C67	
	Harris	HM65262	
	Hitachi	HM6167	
		HM6167H	
		HM6267	
	Inmos	IMS1400	
		IMS1403	**4042**
	IDT	IDT6167	
	Mitsubishi	M5M2167	
	Motorola	MCM2167H	
	NEC	UPD2167	
80186	AMD	80186	
	Fujitsu	80186	
	IMI	IMI6080	
	Siemens	80186.	
80188	AMD	80188	
	Fujitsu	80188	
	Siemens	80188	
◆8022	Toshiba	TMP8022	
8035	AMD	8035	
	National	INS8035	
	NEC	µPD8035	
	Signetics	SCN8035	
	Toshiba	**TMP8035**	**1750**
8039	**Toshiba**	**TMP8039**	**1750**
8041A	AMD	8041	
	NEC	µPD8041A	
8042	Mitsubishi	M5L8042	
8048	AMD	8048	
	National	INS8048	
	NEC	µPD8048	
	Signetics	SCN8048	
	Toshiba	**TMP8048**	**1750**
8049	National	INS8049	
	NEC	µPD8049	
	Signetics	SCN8049	
	Toshiba	**TMP8049**	**1750**
8085	AMD	8085	
		8085A	
	Intel	8085A	
	NEC	µPD8085	
	Toshiba	**TMP8085A**	**1750**
8085A	AMD	8085	
		8085A	
	Intel	8085	
	NEC	µPD8085	
	Toshiba	**TMP8085A**	**1750**
8088	AMD	8088	
	Fujitsu	**MBL8088**	**1611**
80C31	**Signetics**	**SCC80C31**	**1716**
80C35	Toshiba	TMP80C35	
80C39	Mitsubishi	M5M80C39	
	Signetics	**SCC80C39**	**1710**
	Toshiba	TMP80C39	
80C48	NEC	µPD80C48	
	Toshiba	TMP80C48	
80C49	NEC	µPD80C49	
	Signetics	**SCC80C49**	**1710**
	Toshiba	TMP80C49	
80C50	NEC	µPD80C50	
	Toshiba	TMP80C50	
80C51	**Signetics**	**SCC80C51**	**1716**
80C86	**Harris**	**80C86**	**682,1618,1631**
80C88	**Harris**	**80C88**	**1618**
8155	AMD	8155	
	Harris	HS81C55	
	NEC	µPD8155	
	Toshiba	**TMP8155**	**1750**
8156	AMD	8156	
	Harris	HS81C56	
	NEC	µPD8156	
8156-2	NEC	µPD8156-2	
8212	Motorola	MC14575	
	NEC	µPB8212	
8216	National	DP8216	
		INS8216	
	NEC	µPB8216	
8224	AMD	8224	
	National	DP8224	
		INS8224	
8226	Mitsubishi	M5L8226	
	National	DP8226	
		INS8226	
	NEC	µPB8226	
8228	AMD	8228	
	National	DP8228	
		INS8228	
	NEC	µPB8228	
	TI	SN74S428	
		TIM8228	
8231	AMD	AM9511	
		AM9511A	
8237	AMD	AM9517	
		AM9517A	
8237-5	NEC	UPD8237A-5	
8237A-4	AMD	AM8237A	
		AM9517A-4	
	Harris	82C37A	
	Nitron	NC72C37A	
8237A-5	AMD	AM9517A-5	
8243	NEC	UPD8243	
	Toshiba	**TMP8243**	**1750**
82501	SEEQ	8023A	
8253	AMD	8253	
	National	INS8253	
	NEC	UPD8253-2/-5	
	Toshiba	TMP8253	
8254	**Harris**	**82C54**	**682,1619,1620,1631**
		CP82C54	
	Intel	82C54	
	NEC	UPD71054	
	Nitron	NC82C54	
	OKI	82C54	
	S-MOS	SMC82C54AC	

(Continued)

◆ Discontinued

Bold face device numbers indicate manufacturers data is provided in the IC Master on the pages noted.

Intel (Cont'd)

Manufacturer Device	Replacement Source	Device	IC Master Page
8255	Harris	82C55	
		CP82C55A	
	Intel	82C55	
		P8255	
	NEC	UPD71055	
		UPD8255A	
	OKI	82C55	
		MSM82C55A	**4732**
	S-MOS	SMC82C55AC	
	Toshiba	TMP8255	
		TMP82C55	**1750**
8255A	NEC	μPD8255A-21-5	
8257	AMD	8257	
	NEC	UPD8257-2/-5	
8259	AMD	D8259	
	Fujitsu	MBL8259	
	Harris	**82C59A**	**682,1619,1621,1631**
		CP82C59A	
	Intel	82C59A	
	National	INS8259	
	NEC	UPD8259A/A-2	
	Nitron	NC82C59A	
	OKI	**MSM82C59A**	**4732**
	S-MOS	SMC82C59AC	
	Toshiba	TMP8259	
8272	NEC	UPD72066	
	Rockwell	R6765	
8279	AMD	8279-5	
	NEC	μPD8279-5	
8282	**Fujitsu**	**MBL8282**	**1611**
	Harris	**82C82**	**682,1619,1622,1631**
	Intel	82C82	
	NEC	UPD71082	
		μPB8282	
	Nitron	NC82C82	
	OKI	82C82	
8284	AMD	8284	
	Fujitsu	MBL8284	
	Harris	82C84	
		82C84A	**682,1619,1623,1631**
	Intel	82C84	
		82C84A	
	NEC	UPD71084	
		μPB8284	
	Nitron	NC82C84A	
8286	AMD	8304	
		DP8304	
	Fujitsu	**MBL8286**	**1611**
	Harris	**82C86**	**1619,1622**
	Intel	82C86	
	National	DP8304	
	NEC	μPB8286	
		μPD71086	
	Nitron	NC82C86	
	OKI	82C86	
8287	AMD	8287	
	Harris	**82C87**	**1619,1622**
	Intel	82C87	
	NEC	UPS71087	
		μPD8287	
	Nitron	NC82C87	
	OKI	82C87	
8288	AMD	8288	
	Fujitsu	**MBL8288**	**1611**
	Harris	**82C88**	**682,1619,1623,1631**
	Intel	82C88	
	NEC	UPD71088	
		μPB8288	
	Nitron	NC82C88	
	OKI	82C88	
8289	**Fujitsu**	**MBL8289**	**1611**
	Harris	**82C89**	**682,1619,1623,1631**
	NEC	UPB8289	
	Nitron	NC82C89	
82C51	Harris	82C51	
	NEC	μPD71051	
	OKI	82C51	
82C54	**Harris**	**82C54**	**682,1619,1620,1631**
		CP82C54	
	Intel	8254	
	NEC	UPD71054	
	Nitron	NC82C54	
	OKI	82C54	
	S-MOS	SMC82C54AC	

Manufacturer Device	Replacement Source	Device	IC Master Page
82C55	Harris	82C55	
		CP82C55A	
	Intel	8255	
		P8255	
	NEC	UPD71055	
		UPD8255A	
	OKI	82C55	
		MSM82C55A	**4732**
	S-MOS	SMC82C55AC	
	Toshiba	TMP8255	
		TMP82C55	**1750**
82C55A	**Harris**	**82C55A**	**682,1619,1621,1631**
	Nitron	NC82C55A	
82C57	Harris	82C57	
	NEC	μPD71057	
	OKI	82C57	
82C59A	AMD	D8259	
	Fujitsu	MBL8259	
	Harris	**82C59A**	**682,1619,1621,1631**
		CP82C59A	
	Intel	8259	
	National	INS8259	
	NEC	UPD8259A/A-2	
	Nitron	NC82C59A	
	OKI	**MSM82C59A**	**4732**
	S-MOS	SMC82C59AC	
	Toshiba	TMP8259	
82C82	**Fujitsu**	**MBL8282**	**1611**
	Harris	**82C82**	**682,1619,1622,1631**
	Intel	8282	
	NEC	UPD71082	
		μPB8282	
	Nitron	NC82C82	
	OKI	82C82	
82C83	**Harris**	**82C83**	**1619,1622**
	NEC	UPD71083	
	Nitron	NC82C83	
	OKI	82C83	
82C84	AMD	8284	
	Fujitsu	MBL8284	
	Harris	82C84	
		82C84A	**682,1619,1623,1631**
	Intel	8284	
		82C84A	
	NEC	UPD71084	
		μPB8284	
	Nitron	NC82C84A	
82C84A	AMD	8284	
	Fujitsu	MBL8284	
	Harris	82C84	
		82C84A	**682,1619,1623,1631**
	Intel	8284	
		82C84	
	NEC	UPD71084	
		μPB8284	
	Nitron	NC82C84A	
82C86	AMD	8304	
		DP8304	
	Fujitsu	**MBL8286**	**1611**
	Harris	**82C86**	**1619,1622**
	Intel	8286	
	National	DP8304	
	NEC	μPB8286	
		μPD71086	
	Nitron	NC82C86	
	OKI	82C86	
82C87	AMD	8287	
	Harris	**82C87**	**1619,1622**
	Intel	8287	
	NEC	UPS71087	
		μPD8287	
	Nitron	NC82C87	
	OKI	82C87	
	AMD	8288	
	Fujitsu	**MBL8288**	**1611**
	Harris	**82C88**	**682,1619,1623,1631**
	Intel	8288	
	NEC	UPD71088	
		μPB8288	
	Nitron	NC82C88	
	OKI	82C88	
82S191	**Motorola**	**MCM76161**	**4124**
	Raytheon	**29681A**	**4134**
	Xicor	X2616	
8316A	Micrel	MIC2316A	
8355	**Toshiba**	**TMP8355**	**1750**

Manufacturer Device	Replacement Source	Device	IC Master Page
8741A	NEC	μPD8741A	
8748	National	NS80CX48	
	NEC	μPD8748	
8755	NEC	μPD8755	
8755A	NEC	μPD8755A	
87C64	AMD	AM2764	
	Fujitsu	MBM2764	
		MBM27C64	
	Hitachi	HM482764	
		HN2764	
		HN27C64	
		HN482764	
	Intel	2764	
		2764A	
		27C64	**4078**
	Mitsubishi	M5L2764	
	NEC	UPD2764	
		UPD27C64	
	OKI	MSM2764	
		MSM2764A	**4732**
		MSM27C64	
	Rockwell	R2764	
		R27C64	
		R87C64	
	S-MOS	SPM27C64	
	SEEQ	2764	
		5133	
	SGS	M2764	
	Signetics	27C64	
	SSS	SCM27C64	
	TI	TMS27C64	
	ThomsonCSF	ET2764	
	Toshiba	**TMM2764**	**4263**
ID2910	**Harris**	**HC5510**	**3595**
	National	TP3020	
ID2911	**Harris**	**HC5511**	**3595**
	National	TP3021	
ID2912	GTEMicro	G8912B	
	Harris	**HC5512**	**3596**
	Intel	2912	
	National	TP3040	
	Plessey	MV8912	
	SGS	M5912	
	TI	TCM2912B	
ISBC80/30	National	BLC80/316	
M2164A	Mostek	MKB4564	
M2716	National	MM2716M	
M2732	AMD	AM2732	
	Hitachi	HN462732	
	Intel	2732	
		2732A	
	National	MM2732	
		NMC2732	
	Rockwell	R27C32	
	SGS	M2732A	
	Toshiba	TMM324C	
P2732A	TI	TMS27P32A	
P2764A	TI	TMS27PG4	
P8251	AMD	8251	
	NEC	UPD8251A/AF	
	OKI	**MSM82C51A**	**4732**
	S-MOS	SMC82C51AC	
	Toshiba	TMP8251	
P8255	Harris	82C55	
		CP82C55A	
	Intel	8255	
		82C55	
	NEC	UPD71055	
		UPD8255A	
	OKI	82C55	
		MSM82C55A	**4732**
	S-MOS	SMC82C55AC	
	Toshiba	TMP8255	
		TMP82C55	**1750**

Interdesign

Manufacturer Device	Replacement Source	Device	IC Master Page
1G000	Ferranti	ULA1G000	
1U000	Ferranti	ULA1U000	
2U000	Ferranti	ULA2U000	
3U000	Ferranti	ULA3U000	
ADVFC32	Cherry	CS4000	
MCF	Cherry	CS3000	
	Exar	XRF100	
	Interdesign	MOF	
	MCE	MCE-A20F	
MOA	Exar	XRA100	
		XRM100	
	Interdesign	MOM	
	MCE	MCE-A20	
		MCE-A20A	

Manufacturer Device	Replacement Source	Device	IC Master Page
MOB	Exar	XRB100	
	MCE	MCE-A20B	
MOC	Exar	XRC100A	
	MCE	MCE-A20C	
MOD	Exar	XRD100	
	MCE	MCE-A40D	
MOE	Cherry	CS2000	
	Exar	XRE100	
	MCE	MCE-A20E	
MOF	Cherry	CS3000	
	Exar	XRF100	
	Interdesign	MCF	
	MCE	MCE-A20F	
MOG	Cherry	CS2500	
	Exar	XRG100	
	MCE	MCE-A20G	
MOH	Exar	XRH100	
	MCE	MCE-A20H	
MOJ	Exar	XRJ100	
	MCE	MCE-A20J	
MOL	Cherry	CS3200	
	Exar	XRL100	
	MCE	MCE-A20L	
MOM	Exar	XRA100	
		XRM100	
	Interdesign	MOA	
	MCE	MCE-A20	
		MCE-A20A	
MON	MCE	MCE-A20N	
MOP	MCE	MCE-A20P	
MSA	Ferranti	ULA2C000	
MSB	Ferranti	ULA5C000	
MSC	Ferranti	ULA9C000	
MUA	Ferranti	ULA2000	
MUB	Ferranti	ULA2L000	
MUC	Ferranti	ULA2H000	

International Microcircuits, Inc.

Manufacturer Device	Replacement Source	Device	IC Master Page
6080	**S-MOS**	**SLA6080**	**4752**
IMI145155	Motorola	MC145155	
IMI145156	Motorola	MC145156	
IMI145157	Motorola	MC145157	
IMI145158	Motorola	MC145158	
IMI6080	AMD	80186	
	Fujitsu	80186	
	Intel	80186	
	Siemens	80186	
IMI6140	**S-MOS**	**SLA6140**	**4752**
IMI6170	**S-MOS**	**SLA6170**	**4752**
IMI6270	**S-MOS**	**SLA6270**	**4752**
IMI6330	**S-MOS**	**SLA6330**	**4752**
IMI6430	**S-MOS**	**SLA6430**	**4752**
IMI6620	**S-MOS**	**SLA6620**	**4752**
MPY012	SiliconG	SM656	
	Unitrode	PIC656	
MPY12IMI	AD	ADSP1012	
	IDT	**IDT7212**	**1087,1088**
	LogicDev	LMU12	
	TRW-LSI	MPY0121H	
		MPY012H	

Intersil

Manufacturer Device	Replacement Source	Device	IC Master Page
6508	Fujitsu	8401	
	GouldAMI	6508	
	Harris	HM6508	
	Intersil	IM6508-1	
	MicroPwr	6508	
	National	6508	
		74C929	
	NEC	443	
	RCA	6508	
	Toshiba	5508	
A561	AD	AD507	
	Burr-Brown	3508	
	Datel	AM-462-1	
		AM-462-2	
	Elantec	**EHA2620**	**3538**
		EHA2622	**3538**
		EHA2625	**3538**
	Harris	HA-2620	
		HA-2622	
		HA-2625	
AD101	AMD	LM101	
	AD	AD101	
	Fairchild	μA101	
	LinearTech	LM101	
	Motorola	LM101	
	Raytheon	LM101	

(Continued)

◆ Discontinued

The manufacturers report their devices can be used as direct replacements.
Performance details often differ, so compare the specifications considering your requirements.

Intersil (Cont'd)

Manufacturer Device	Replacement Source	Device	IC Master Page
AD101	SiliconG	SG101	
	ThomsonCSF	LM101	
AD301	AD	AD301	
	Fairchild	µA301A	
	LinearTech	LM301	
		LM301A	
	Motorola	LM301	
	National	LM301	
		LM301A	
	NEC	µPC157	
		µPC301	
	Raytheon	LM301	
	RCA	CA301	
		LM301	
	SiliconG	SG301	
	TI	LM301	
		LM301A	
	ThomsonCSF	LM301A	
	Toshiba	TA7506	
AD308	AD	AD308	
	Burr-Brown	3500	
		3501	
	Fairchild	µA308	
	Intersil	**LM308**	**3600,3601**
	MicroPwr	**MP308**	**3607**
	Motorola	**LM308**	**3615**
	National	LM308	
	Raytheon	LM308	
AD503	AD	AD0042	
		AD503	
	Intersil	LH0042	
	National	LH0042	
AD590	AD	AD590	
AD7520	AD	AD7520	
	Datel	DAC-HA10B	
	MicroPwr	MP7520	
	National	AD7520	
		DAC1020	
		DAC1021	
		DAC1022	
AD7521	AD	AD7521	
	Datel	DAC-HA12B	
	HybridSys	DAC331-12	
	MicroPwr	MP7521	
	National	AD7521	
		DAC1220	
		DAC1221	
		DAC1222	
AD7523	AD	AD7523	
	Datel	**DAC-7523**	**3162**
	MicroPwr	MP7523	
AD7533	AD	AD7533	
	Datel	**DAC-7533**	**3162**
	MicroPwr	MP7533	
	National	AD7533	
AD7541	AD	AD7541	
	Datel	**DAC-7541**	**3162**
	Harris	HI7541	
	HybridSys	DAC331	
		HS7541	
	Intersil	ICL7541	
	MicroPwr	MP7541	
		MP7621	
	National	AD7521	
	Siliconix	SI7541	
	TeledyneP	TP7541	
◆ADC0801	National	ADC0801	
	TI	ADC0801	
ADC0802	National	ADC0802	
	TI	ADC0802	
ADC0803	**Datel**	**ADC-830**	**3157,3162**
	National	ADC0803	
	TI	ADC0803	
ADC0804	National	ADC0804	
	TI	ADC0804	
D125	Siliconix	D125	
	TeledyneC	CDR125	
DG118	Siliconix	DG172	
DG123	Siliconix	DG123	
DG125	Siliconix	DG125	
DG126	National	AH0126	
	Siliconix	DG126	
DG129	National	AH0129	
	Siliconix	DG129	
DG133	National	AH0133	
	Siliconix	DG133	
DG134	National	AH0134	
	Siliconix	DG134	
DG139	National	AH0139	
	Siliconix	DG139	
DG140	National	AH0140	
	Siliconix	DG140	
DG141	National	AH0141	
	Siliconix	DG141	
DG142	National	AH0142	
	Siliconix	DG142	
DG143	National	AH0143	
	Siliconix	DG143	
DG144	National	AH0144	
	Siliconix	DG144	
DG145	National	AH0145	
	Siliconix	DG145	
DG146	National	AH0146	
	Siliconix	DG146	
DG151	National	AH0151	
DG152	National	AH0152	
DG153	National	AH0153	
DG154	National	AH0154	
		AM0154	
DG161	National	AH0161	
DG162	National	AH0162	
DG163	National	AH0163	
		AM0163	
DG164	National	AH0164	
		AM0164	
DG180	Siliconix	DG180	
DG181	Harris	HI381	
		HI5048	
	Intersil	IH5048	
	Siliconix	DG181	
		DG381A	
DG182	Siliconix	DG182	
DG183	Siliconix	DG183	
DG184	Harris	HI384	
		HI5049	
	Intersil	IH5049	
	Siliconix	DG184	
		DG384A	
DG185	Harris	HI5045	
	Intersil	IH5045	
	Siliconix	DG185	
		DG5045	
	TI	TL185	
DG186	Siliconix	DG186	
DG187	Harris	HI387	
		HI5050	
	Intersil	IH5050	
	Siliconix	DG187	
		DG387A	
DG188	Harris	HI5042	
	Intersil	IH5042	
	Siliconix	DG188	
		DG5042	
DG189	Siliconix	DG189	
DG190	Harris	HI5051	
	Intersil	IH5051	
	Siliconix	DG190	
DG191	Harris	HI5043	
	Intersil	IH5043	
	Siliconix	DG191	
		DG243	
		DG5043	
DG200	AD	ADG200	
	Harris	HI200	
	Intersil	IH200	
		IH5200	**3196**
	MicroPwr	MP200	
	PMI	SW05	
	Siliconix	DG200A	
DG201	AD	ADG201	
	Harris	HI201	
	Intersil	IH201	
		IH5201	
	MicroPwr	MP201	
	National	LF11201	
		LF13201	
	PMI	SW201	
	Siliconix	DG201A	
G118	Siliconix	G118	
G119	Siliconix	G119	
◆HA2500	**Elantec**	**EHA2500**	**3538**
	Harris	HA-2500	
◆HA2502	Datel	AM-450-2M	
	Elantec	**EHA2502**	**3538**
	Harris	HA-2502	
◆HA2505	AD	AD540	
	Datel	**AM-450-2**	**3163**
	Elantec	**EHA2505**	**3538**
	Harris	HA-2505	
◆HA2510	**Elantec**	**EHA2510**	**3538**
	Harris	HA-2510	
◆HA2512	**Elantec**	**EHA2512**	**3538**
	Harris	HA-2512	
◆HA2515	**Elantec**	**EHA2515**	**3538**
	Harris	HA-2515	
◆HA2520	AD	AD509	
	Burr-Brown	3507	
	Harris	HA2520	
	TeledyneP	1322	
◆HA2522	Datel	AM-452-2M	
	Elantec	**EHA2522**	**3538**
	Harris	HA-2522	
◆HA2525	AD	AD540	
	Datel	**AM-450-2**	**3163**
	Elantec	**EHA2505**	**3538**
	Harris	HA-2505	
◆HA2600	**Elantec**	**EHA2600**	**3538**
	Fairchild	µA741	
	Harris	HA-2600	
	Motorola	**MC1556**	**3616**
	TeledyneP	1326	
	TI	MC1556	
◆HA2602	Datel	AM-460-2M	
	Elantec	**EHA2602**	**3538**
	Harris	HA-2602	
◆HA2605	**Datel**	**AM-460-2**	**3163**
	Elantec	**EHA2605**	**3538**
	Harris	HA-2605	
	Motorola	**MC1456**	**3616**
	TI	MC1456	
◆HA2620	AD	AD507	
	Burr-Brown	3508	
	Datel	AM-462-1	
		AM-462-2	
	Elantec	**EHA2620**	**3538**
		EHA2622	**3538**
		EHA2625	**3538**
	Harris	HA-2620	
		HA-2622	
		HA-2625	
	Intersil	A561	
◆HA2622	AD	AD507	
	Burr-Brown	3508	
	Datel	AM-462-1	
		AM-462-2	
	Elantec	**EHA2620**	**3538**
		EHA2622	**3538**
		EHA2625	**3538**
	Harris	HA-2620	
		HA-2622	
		HA-2625	
	Intersil	A561	
◆HA2625	AD	AD507	
	Burr-Brown	3508	
	Datel	AM-462-1	
		AM-462-2	
	Elantec	**EHA2620**	**3538**
		EHA2622	**3538**
		EHA2625	**3538**
	Harris	HA-2620	
		HA-2622	
		HA-2625	
	Intersil	A561	
ICL7106	Maxim	ICL7106	
	TeledyneS	TSC7106	
ICL7107	Maxim	ICL7107	
	TeledyneS	TSC7107	
ICL7109	**Datel**	**ADC-7109**	**3159**
	Maxim	ICL7109	
	TeledyneS	TSC7109	
ICL7116	Maxim	ICL7116	
	TeledyneS	TSC7116	
ICL7117	Maxim	ICL7117	
		ICL7126	
	TeledyneC	TSC7117	
	TeledyneS	TSC7117	
ICL7126	Maxim	ICL7126	
	TeledyneS	TSC7126	
ICL7129	Maxim	ICL7129	
ICL7135	Maxim	ICL7135	
	Siliconix	**SI7135**	**3248,3254**
		Si7135	
	TeledyneS	TSC7135	
ICL7136	Maxim	ICL7136	
ICL7211	Hughes	HLCD7211	
	RCA	**CD22104**	**1147**
	TeledyneS	TSC7211	
ICL7541	AD	AD7541	
	Datel	**DAC-7541**	**3162**
	Harris	HI7541	
	HybridSys	DAC331	
		HS7541	
	Intersil	AD7541	
			(Continued)
ICL7541	MicroPwr	MP7541	
		MP7621	
	National	AD7521	
	Siliconix	SI7541	
	TeledyneP	TP7541	
ICL7555	Exar	XRL555	
ICL7556	Exar	XRL556	
ICL7611	Harris	HA-2720	
	Intersil	ICL8021	
		LM4250	
	Maxim	ICL7611	
	Motorola	**MC1776**	**3616**
	National	LF441	
		LM4250	
	PMI	OP20	
		OP21	
		OP22	
	SGS	MC1776	
	Solitron	UC4250	
	TI	TLC251	
		TLC271	
	ThomsonCSF	µA776	
ICL7612	Maxim	ICL7612	
ICL7614	Maxim	ICL7614	
ICL7616	Maxim	ICL7616	
ICL7621	Maxim	ICL7621	
	PMI	OP220	
		OP221	
	TI	TLC252	
		TLC272	
ICL7622	Maxim	ICL7622	
ICL7631	Maxim	ICL7631	
ICL7632	Maxim	ICL7632	
ICL7641	Maxim	ICL7641	
	TI	TLC254	
		TLC274	
ICL7642	Maxim	ICL7642	
ICL7650	**Datel**	**AM-7650**	**3158,3163**
	LinearTech	LTC1052	
		LTC7652	
	Maxim	ICL7650	
	Siliconix	**SI7135**	**3248,3254**
	TeledyneC	TSC7650	
ICL7652	LinearTech	LTC1052	
	Maxim	ICL7652	
	Siliconix	SI7652	
ICL7660	Datel	VI-7660	
	LinearTech	LTC1044	
	Maxim	ICL7660	
	Siliconix	SI7660	
	TeledyneC	TSC7660	
ICL7662	Siliconix	SI7661	
ICL7663	Maxim	ICL7663	
ICL7664	Maxim	ICL7664	
ICL7665	Maxim	ICL7665	
ICL8007	AD	AD8007	
ICL8013	AD	AD530	
		AD533	
	Burr-Brown	**4203**	**3151**
		MPY100	**3151**
ICL8021	Harris	HA-2720	
	Intersil	ICL7611	
		LM4250	
	Maxim	ICL7611	
	Motorola	**MC1776**	**3616**
	National	LF441	
		LM4250	
	PMI	OP20	
		OP21	
		OP22	
	SGS	MC1776	
	Solitron	UC4250	
	TI	TLC251	
		TLC271	
	ThomsonCSF	µA776	
ICL8038	**Exar**	**XR8038**	**3554**
ICL8069	AD	AD589	
	Ferranti	ZN423	
	Maxim	ICL8069	
	MicroPwr	**MP5010**	**688,3607**
	National	LM113	
		LM313	
	TeledyneS	9491	
		T-SC9491	
ICL8240	Exar	XR2240	
	Fairchild	UA238	
		µA2240	
	TI	µA2240	
ICM7211	Hughes	H7211	
	Maxim	ICM7211	
	RCA	**CD22104**	**1147**
			(Continued)

◆ Discontinued

Bold face device numbers indicate manufacturers data is provided in the IC Master on the pages noted.

ALTERNATE SOURCE DIRECTORY

Intersil (Cont'd)

Manufacturer Device	Replacement Source	Device	IC Master Page
ICM7211	**RCA**	**CD22105**	**1147**
	TeledyneS	TSC7211	
ICM7212	Maxim	ICM7212	
	TeledyneS	TSC7212	
ICM7217	Maxim	ICL7217	
ICM7218	Maxim	ICM7218	
ICM7224	Maxim	ICM7224	
ICM7225	Maxim	ICM7225	
ICM7231	Maxim	ICM7231	
ICM7232	Maxim	ICM7232	
ICM7233	Maxim	ICM7233	
ICM7234	Maxim	ICM7234	
ICM7240	Exar	XR2240	
	Maxim	ICM7240	
ICM7250	Maxim	ICM7250	
ICM7260	Maxim	ICM7260	
ICM7555	Maxim	ICM7555	
	TI	TLC555	
ICM7556	Maxim	ICM7556	
IH-5108	**Burr-Brown**	**MPC8S**	**3149**
	Datel	**MX-808**	**3163**
	Harris	HI508A	
IH200	AD	ADG200	
	Harris	HI200	
	Intersil	**DG200**	**3196**
		IH5200	**3196**
	MicroPwr	MP200	
	PMI	SW05	
	Siliconix	DG200A	
IH201	AD	ADG201	
	Harris	HI201	
	Intersil	DG201	
		IH5201	
	MicroPwr	MP201	
	National	LF11201	
		LF13201	
	PMI	SW201	
	Siliconix	DG201A	
IH5009	National	AH5009	
		AM9709	
		AM97C09	
IH5010	National	AH5010	
		AM9710	
IH5011	National	AH5011	
		AM9711	
IH5012	National	AH5012	
		AM9712	
IH5013	National	AH5013	
IH5014	National	AH5014	
IH5015	National	AH5015	
IH5016	National	AH5016	
IH5040	Harris	HI5040	
	Siliconix	DG5040	
IH5041	Harris	HI5041	
	Siliconix	DG5041	
IH5042	Harris	HI5042	
	Intersil	DG188	
	Siliconix	DG188	
		DG5042	
IH5043	Harris	HI5043	
	Intersil	DG191	
	Siliconix	DG191	
		DG243	
		DG5043	
IH5044	Harris	HI5044	
	Siliconix	DG5044	
IH5045	Harris	HI5045	
	Intersil	DG185	
	Siliconix	DG185	
		DG5045	
	TI	TL185	
IH5046	Harris	HI5046	
IH5047	Harris	HI5047	
IH5048	Harris	HI381	
		HI5048	
	Intersil	DG181	
	Siliconix	DG181	
		DG381A	
IH5049	Harris	HI384	
		HI5049	
	Intersil	DG184	
	Siliconix	DG184	
		DG384A	
IH5050	Harris	HI387	
		HI5050	
	Intersil	DG187	
	Siliconix	DG187	
		DG387A	
IH5051	Harris	HI5051	
	Intersil	DG190	
	Siliconix	DG190	
IH5052	Siliconix	DG211	
IH5140	Siliconix	DG5140	
IH5141	Siliconix	DG5141	
IH5142	Siliconix	DG5142	
IH5143	Siliconix	DG5143	
IH5144	Siliconix	DG5144	
IH5145	Siliconix	DG5145	
IH5200	AD	ADG200	
	Harris	HI200	
	Intersil	**DG200**	**3196**
		IH200	
	MicroPwr	MP200	
	PMI	SW05	
	Siliconix	DG200A	
IH5201	AD	ADG201	
	Harris	HI201	
	Intersil	DG201	
		IH201	
	MicroPwr	MP201	
	National	LF11201	
		LF13201	
	PMI	SW201	
	Siliconix	DG201A	
IH5208	**Burr-Brown**	**MPC4D**	**3149**
	Burr-Brown	**MPC4D**	**3149**
	Harris	HI509A	
	TeledyneP	4553	
IH6108	AD	AD7501	
	Burr-Brown	**MPC8S**	**3149**
	Datel	MUX808	
		MX-808	**3163**
	Harris	HI508	
	MicroPwr	MP7501	
		MP7508	
	National	LF11508	
		LF13508	
	PMI	DMX-88	
		MUX-08	
		MUX-88	
	Siliconix	DG508A	
	TeledyneP	4554	
IH6116	**Burr-Brown**	**MPC16S**	**3149**
	Datel	**MV-1606**	**3163**
		MX-1606	**3163**
	Harris	HI506	
	MicroPwr	MP7506	
	PMI	MUX-16	
	Siliconix	DG506A	
IH6208	**Burr-Brown**	**MPC4D**	**3149**
	Harris	HI509	
	MicroPwr	MP7509	
		MP7509DI	
	National	LF11509	
		LF13509	
	PMI	MUX-24	
	Siliconix	DG509A	
	TeledyneP	4553	
IH6216	AD	AD7507	
	Burr-Brown	**MPC8D**	**3149**
	Datel	**MVD-807**	**3163**
		MXD-807	**3163**
	Harris	HI507	
	MicroPwr	MP7507	
	PMI	MUX-28	
	Siliconix	DG507A	
	TeledyneP	4551	
◆IM5603	AMD	AM27S20	
	Fujitsu	MB7113	
	MMI	6300-1	
		63S140	**4101,4102**
	National	DM74S387	
	Signetics	**N82S126**	**4166**
	TI	TBP24SA10	
◆IM5605	AMD	AM27S30	
	MMI	6340-1	
	National	DM74S475	
		DM77S475	
		DM87S475	
	Signetics	N82S140	
	TI	TBP28SA46	
◆IM5610	AMD	AM27LS19	
		AM27S19	
	Fujitsu	MB7112	
	MMI	5331-1	
		53S081	**4101**
		6331-1	
		63S081	**4101,4102**
	Motorola	MCM27S19	
	National	DM74S288	
			(Continued)
◆IM5610	National	DM8578	
	Signetics	**N82S123**	**4166**
		S82S123	
	TI	**TBP18S030**	**729**
◆IM5623	AMD	27521	
		AM27S11	
		AM27S21	
	Fujitsu	MB7114	
	MMI	6301-1	
		63S141	**4101,4102**
	National	DM74S287	
	Signetics	**N82S129**	**4166**
	TI	**TBP24S10**	**729**
◆IM5625	AMD	AM27S31	
	MMI	6341-1	
	Motorola	**MCM7641**	**4124**
	National	DM74S474	
	Signetics	N82S141	
	TI	TBP28S46	
◆IM56S04	AMD	AM27S12	
	Fujitsu	MB7115	
	MMI	6305-1	
		63S240	**4101,4102**
	National	DM74S570	
	Signetics	**N82S130**	**4166**
◆IM6100	Harris	HM6100	
◆IM6402	Fairchild	F6850	
	GouldAMI	S1602	
	Hitachi	HD6850	
	Motorola	**MC6850**	**1663**
	ThomsonCSF	EF6850	
◆IM6504	GouldAMI	6504	
	Harris	HM6504	
	Hitachi	4315	
		6147	
	Mitsubishi	58981	
	Motorola	6504	
	National	NMC6504	
	OKI	5104	
	RCA	CDM5104	
	Rockwell	R6504	
	Synertek	SY6504	
	Toshiba	TC5504	
IM6508-1	Fujitsu	8401	
	GouldAMI	6508	
	Harris	HM6508	
	Intersil	6508	
	MicroPwr	6508	
	National	6508	
		74C929	
	NEC	443	
	RCA	6508	
	Toshiba	5508	
◆IM6514	Harris	HM6514	
	Hitachi	6148	
		HM4334	
	Mitsubishi	58981	
	Motorola	6514	
	NEC	444	
	OKI	5114	
	RCA	MWS5514	
	Rockwell	R6514	
	Synertek	SY6514	
	Toshiba	TC5514	
◆IM6518-1	GouldAMI	6518	
	Harris	HM6518	
	MicroPwr	6518	
	Motorola	6518	
	National	MM74C930	
◆IM6551	GouldAMI	S5101	
		S6501	
	Harris	MH6501	
	Hitachi	HM435101	
	Intel	5101	
	Motorola	MCM5101	
		MCMS1L01	
	National	MM74C920	
	Panasonic	MNS101	
	RCA	**MWS5101**	**1673,1676**
	Sharp	LH5101	
	SSS	SCM5101	
	Synertek	SY2101	
	Toshiba	TC5501	
◆IM6561	Harris	HM6561	
◆LD110	Siliconix	LD110	
◆LD111	Siliconix	LD111	
◆LF255	MicroPwr	MP255	
	National	LF255	
	PMI	PM255	
	ThomsonCSF	TDE0155	
◆LF256	National	LF256	
	ThomsonCSF	TDE0156	
◆LF355	LinearTech	LF355	
	Motorola	**LF355**	**3616**
	National	LF355	
	PMI	PM355	
	ThomsonCSF	LF355	
◆LF356	LinearTech	LF356	
	Motorola	**LF356**	**3616**
	National	LF356	
	PMI	PM356	
	ThomsonCSF	LF356	
LH0042	AD	AD0042	
		AD503	
	Intersil	AD503	
	National	LH0042	
LH2101	AMD	LH2101	
	National	LH2101	
	Raytheon	LH2101	
LH2108	LinearTech	LH2108	
	National	LH2108	
	PMI	MP2108	
		PM2108	
LH2108A	National	LH2108A	
	PMI	PM2108A	
LH2110	National	LH2110	
◆LH2111	National	LH2111	
	Raytheon	LH2111	
LH2208A	**MicroPwr**	**MP2208A**	**3607**
	National	LH2208A	
LH2308	National	LH2308	
LH2308A	National	LH2308A	
LH2310	National	LH2310	
LH2311	National	LH2311	
LM105	AMD	LM105	
	Fairchild	μA105	
	National	LM105	
	SiliconG	SG105	
	ThomsonCSF	LM105	
◆LM107	AMD	LM107	
	AD	**AD741S**	**3507**
	Burr-Brown	3500	
	LinearTech	LM107	
	National	LH741A	
		LM107	
	PMI	PM741	
	Raytheon	RC741	
	SiliconG	SG107	
	TI	**LM107**	**718**
	ThomsonCSF	LM107	
LM108	AD	AD108	
	Fairchild	μA108	
	Harris	LM108	
	LinearTech	LM108	
	MicroPwr	**MP108**	**688,3607**
	Motorola	**LM108**	**3615**
	National	LM108	
	PMI	PM108	
	SGS	M108	
	SiliconSys	**SSI108**	**3736**
	TI	LM108	
◆LM110	AMD	LM110	
	National	LM110	
◆LM111	AD	AD111	
	Fairchild	μA111	
	LinearTech	LM111	
	Motorola	**LM111**	**3631**
	National	LM111	
	Raytheon	LM111	
	Signetics	**LM111**	**3725**
	SiliconG	SG111	
	TI	**LM111**	**719**
	ThomsonCSF	LM111	
LM308	AD	AD308	
	Burr-Brown	3500	
		3501	
	Fairchild	μA308	
	Intersil	AD308	
	MicroPwr	**MP308**	**3607**
	Motorola	**LM308**	**3615**
	National	LM308	
	Raytheon	LM308	
◆LM311	AD	AD311	
	Fairchild	μA311	
	LinearTech	LM311	
	Motorola	**LM2903**	**3631**
		LM311	**3631**
	National	LM2903	
		LM311	
	NEC	μPC271	
		μPC311	
	Raytheon	LM311	
			(Continued)

◆ Discontinued

The manufacturers report their devices can be used as direct replacements.
Performance details often differ, so compare the specifications considering your requirements.

Intersil (Cont'd)

Manufacturer Device	Replacement Source	Device	IC Master Page
◆LM311	**RCA**	**CA311**	**3672,3677**
		LM311	
	SGS	LM2903	
		LM311	
	Signetics	**LM2903**	**3725**
		LM311	**3721**
	SiliconG	SG311	
	TI	LM2903	
		LM311	
	ThomsonCSF	LM2903	
		LM311	
		SFC3111	
◆LM339	AMD	LM339A	
	Fairchild	μA339	
	Hitachi	HA17901	
	Motorola	**LM339**	**3631**
	National	LM339	
	NEC	μPC339	
	PMI	CMP-04	
		PM339A	
	Raytheon	LM339	
	RCA	**CA339**	**3672,3677**
		CA339A	**3672,3677**
		LM339	
	SGS	LM339	
	TI	LM339	
	ThomsonCSF	LM339	
		TDB0139	
LM348	Exar	XR4751	
	Motorola	**MC4741**	**3618**
	National	LM348	
	Raytheon	HA4741	
LM4250	Harris	HA-2720	
	Intersil	ICL7611	
		ICL8021	
	Maxim	ICL7611	
	Motorola	**MC1776**	**3616**
	National	LF441	
		LM4250	
	PMI	OP20	
		OP21	
		OP22	
	SGS	MC1776	
	Solitron	UC4250	
	TI	TLC251	
		TLC271	
	ThomsonCSF	μA776	
LM723	Fairchild	μA723	
	Hitachi	HA17723	
	Motorola	**MC1723**	**3625**
	National	LM723	
	Raytheon	RC723	
		RM723	
	RCA	CA723	
		LM723	
	SGS	L123	
		LM723	
	Signetics	**μA723**	**3721,3730**
	SiliconG	SG723	
	TI	μA723	
	ThomsonCSF	LM723	
◆MC3302	Cypress	CY7C901	
	Fairchild	μA2901	
		μA3302	
	Motorola	**LM2901**	**3631**
		MC3302	**3631**
	National	LM2901	
		LM3302	
	NEC	μPC2901	
	PMI	CMP-04	
	Raytheon	LM2901	
		RC3302	
	RCA	CA3302	
	SGS	LM2901	
		MC3302	
	Signetics	**LM2901**	**3721,3722**
		MC3302	**3721**
	SiliconG	SG324A	
	TI	LM2901	
		LM3302	
	ThomsonCSF	LM2901	
NE555	Exar	XR555	
	Fairchild	μA555	
	Hitachi	HA17555	
	Mitsubishi	M51841	
		M51848	
		M5251	
		M5E555	
	Motorola	MC1455	
	NEC	μPC1555	
NE555	Raytheon	RC555	
	RCA	CA555	
	Sanyo	LB8555	
	SGS	NE555	
	Signetics	**NE555**	**3721**
		NE555N	
	TI	NE555	
	ThomsonCSF	LM555	
	Samsung	**NE555**	**3679**
NE592	**Signetics**	**NE592**	**3722,3729**
NE592-8	TI	NE592-8	
SE555	Exar	XR555M	
	Motorola	MC1555	
	Raytheon	RM555	
	Signetics	**SE555**	**3724,3728**
	TI	**SE555**	**720**
SE592	Motorola	SE592	
	Signetics	**SE592**	**3722,3729**
μA733	Fairchild	μA733	
	Hitachi	HA17733	
	Motorola	**MC1733**	**3616**
		NE592	
	National	LM733	
	Signetics	**μA733**	**3721,3729**
	TI	μA733	

Intronics

Manufacturer Device	Replacement Source	Device	IC Master Page
A560	Burr-Brown	3507	
	Datel	AM452	
	Harris	HA2525	

ITT Semiconductors

Manufacturer Device	Replacement Source	Device	IC Master Page
DF320	Mitel	MT4320	
ITT2167	AMD	AM2167	
	Fujitsu	MB8167A	
	Hitachi	HM6167	
	IDT	IDT6167	
	Motorola	MCM2167H	
ITT505	Dionics	DI230	
TBA950	National	TBA950	

Lambda Semiconductors

Manufacturer Device	Replacement Source	Device	IC Master Page
LAS1405	Fairchild	SH0323	
		SH323	
		μA323	
		μA78H05	
	IPS	IP123-5	
		IP323	**3599**
	Lambda	LAS1905	
	LinearTech	LM323	
	Micropac	M78H05	
	Motorola	**LM323**	**3622**
		MC78T05C	**3622**
	SiliconG	SG323	
	ThomsonCSF	LM323	
LAS1412	Fairchild	μA78H12A	
	Lambda	LAS1912	
	Micropac	M78H12	
LAS14U	Fairchild	μA78HGA	
	IPS	**IP350**	**3599**
	Lambda	LAS19U	
	LinearTech	LM350	
	Motorola	**LM350**	**3625**
	National	LM350	
	SiliconG	SG350	
	TI	LM350	
LAS1515	Fairchild	μA7815	
		μA78L15	
	IPS	**IP140-15**	**3599**
		IP340-15	**3599**
		IP7815	**3599**
	Lambda	LMC7815	
		LμA7815	
	Motorola	**MC7815**	**3624**
		MC78L15	
	National	LM340-15	
		LM340LA-15	
		LM340T-15	
		LM7815	
		LM78L15	
	NEC	μPC7815	
		μPC78L15	
	SGS	L7815	
	SiliconG	SG340-15	
		SG7815	
	TI	LM340-15	
		μA7815	
		μA78L15	
	ThomsonCSF	μA7815	
LAS1515	Toshiba	TA78015	
	Samsung	MC7815	
	Unitrode	UC7815	
LAS18U	Fairchild	μA79HG	
LAS1905	Fairchild	SH0323	
		SH323	
		μA323	
		μA78H05	
	IPS	IP123-5	
		IP323	**3599**
	Lambda	LAS1405	
	LinearTech	LM323	
	Micropac	M78H05	
	Motorola	**LM323**	**3622**
		MC78T05C	**3622**
	SiliconG	SG323	
	ThomsonCSF	LM323	
LAS1912	Fairchild	μA78H12A	
	Lambda	LAS1412	
	Micropac	M78H12	
LAS19U	Fairchild	μA78HGA	
	IPS	**IP350**	**3599**
	Lambda	LAS14U	
	LinearTech	LM350	
	Motorola	**LM350**	**3625**
	National	LM350	
	SiliconG	SG350	
	TI	LM350	
LAS3905	Fairchild	μA78P05	
	Micropac	M78P05	
		MLAS3905	
LAS3912	Micropac	MLAS3912	
LAS3915	Micropac	MLAS3915	
LAS7812	**IPS**	**IP320-12**	**3599**
LLM220	National	LM220	
LLM223	Fairchild	SH223	
		μA223	
	IPS	**IP223**	**3599**
	Motorola	**LM223**	**3622**
	National	LM223	
	SiliconG	SG223	
	ThomsonCSF	TDE0123	
LLM320	National	LM320	
LLM340	National	LM340	
LMC7806	Lambda	LμA7806	
	Motorola	**MC7806**	**3623**
	SiliconG	SG340-6	
		SG7806	
	TI	μA7806	
	ThomsonCSF	μA7806	
	Samsung	MC7806	
LMC7808	Lambda	LμA7808	
	Motorola	**MC7808**	**3623**
	NEC	μPC7808	
	SiliconG	SG340-8	
		SG7808	
	TI	μA7808	
	ThomsonCSF	μA7808	
	Samsung	MC7808	
LMC7812	Fairchild	μA7812	
	IPS	**IP140-12**	**3599**
		IP340-12	**3599**
		IP7812	**3599**
	Lambda	LμA7812	
	Motorola	**MC7812**	**3623**
	National	LM7812	
	NEC	μPC7812	
	SGS	L7812	
	SiliconG	SG340-12	
		SG7812	
	TI	μA7812	
	Toshiba	TA78012	
	Samsung	MC7812	
	Unitrode	UC7812	
LMC7815	Fairchild	μA7815	
		μA78L15	
	IPS	**IP140-15**	**3599**
		IP340-15	**3599**
		IP7815	**3599**
	Lambda	LAS1515	
		LμA7815	
	Motorola	**MC7815**	**3624**
		MC78L15	
	National	LM340-15	
		LM340LA-15	
		LM340T-15	
		LM7815	
		LM78L15	
	NEC	μPC7815	
		μPC78L15	
	SGS	L7815	
	SiliconG	SG340-15	
LMC7815	SiliconG	SG7815	
	TI	LM340-15	
		μA7815	
		μA78L15	
	ThomsonCSF	μA7815	
	Toshiba	TA78015	
	Samsung	MC7815	
	Unitrode	UC7815	
LMC7818	NEC	μPC7818	
	SiliconG	SG340-18	
		SG7818	
	TI	LM340-18	
		μA7818	
	ThomsonCSF	μA7818	
LMC7824	Lambda	LμA7824	
	Motorola	**MC7824**	**3624**
	NEC	μPC7824	
	SGS	L7824	
	SiliconG	SG7824	
	TI	LM340-24	
		μA7824	
	ThomsonCSF	μA7824	
	Samsung	MC7824	
LMC7902	Fairchild	μA7902	
	Motorola	MC7902	
	Samsung	MC7902	
LMC7905	Fairchild	MC7905	
	Motorola	MC7905	
	SGS	L7905	
	SiliconG	SG7905	
	Samsung	MC7905	
LMC7908	Fairchild	MC7908	
		μA7908	
		μA79M08	
	Lambda	LμA7908	
	Motorola	MC7908	
	SGS	L7908	
	SiliconG	SG7908	
	TI	μA7908	
		μA79M08	
	Samsung	MC7908	
LμA7806	Lambda	LMC7806	
	Motorola	**MC7806**	**3623**
	SiliconG	SG340-6	
		SG7806	
	TI	μA7806	
	ThomsonCSF	μA7806	
	Samsung	MC7806	
LμA7808	Lambda	LMC7808	
	Motorola	**MC7808**	**3623**
	NEC	μPC7808	
	SiliconG	SG340-8	
		SG7808	
	TI	μA7808	
	ThomsonCSF	μA7808	
	Samsung	MC7808	
LμA7812	Fairchild	μA7812	
	IPS	**IP140-12**	**3599**
		IP340-12	**3599**
		IP7812	**3599**
	Lambda	LMC7812	
	Motorola	**MC7812**	**3623**
	National	LM7812	
	NEC	μPC7812	
	SGS	L7812	
	SiliconG	SG340-12	
		SG7812	
	TI	μA7812	
	Toshiba	TA78012	
	Samsung	MC7812	
	Unitrode	UC7812	
LμA7815	Fairchild	μA7815	
		μA78L15	
	IPS	**IP140-15**	**3599**
		IP340-15	**3599**
		IP7815	**3599**
	Lambda	LAS1515	
		LMC7815	
	Motorola	**MC7815**	**3624**
		MC78L15	
	National	LM340-15	
		LM340LA-15	
		LM340T-15	
		LM7815	
		LM78L15	
	NEC	μPC7815	
		μPC78L15	
	SGS	L7815	
	SiliconG	SG340-15	
		SG7815	
	TI	LM340-15	
		μA7815	

(Continued)

◆ Discontinued

Bold face device numbers indicate manufacturers data is provided in the IC Master on the pages noted.

ALTERNATE SOURCE DIRECTORY

Lambda Semiconductors (Cont'd)

Manufacturer Device	Replacement Source	Device	IC Master Page
LμA7815	TI	μA78L15	
	ThomsonCSF	μA7815	
	Toshiba	TA78015	
	Samsung	MC7815	
	Unitrode	UC7815	
LμA7824	Lambda	LMC7824	
	Motorola	**MC7824**	**3624**
	NEC	μPC7824	
	SGS	L7824	
	SiliconG	SG7824	
	TI	LM340-24	
		μA7824	
	ThomsonCSF	μA7824	
	Samsung	MC7824	
LμA7905	Fairchild	μA7905	
		μA79M05	
	IPS	**IP120-5**	**3599**
		IP320-5	**3599**
		IP7905	**3599**
	National	LM320MP5	
		LM7905	
		LM79M05	
	NEC	μPC7905	
	SiliconG	SG120-5	
		SG320-05	
		SG320P-5	
	TI	μA7905	
	Unitrode	UC7905	
LμA7908	Fairchild	MC7908	
		μA7908	
		μA79M08	
	Lambda	LMC7908	
	Motorola	MC7908	
	SGS	L7908	
	SiliconG	SG7908	
	TI	μA7908	
		μA79M08	
	Samsung	MC7908	

Lattice Semiconductor

Manufacturer Device	Replacement Source	Device	IC Master Page
SR64K4	AMD	AM99C164	
	Inmos	IMS1620	
	Motorola	MCM6288	
SR64KX4	Fujitsu	MB81C74	

Linear Technology Corp.

Manufacturer Device	Replacement Source	Device	IC Master Page
OP27	AD	AD510	
		AD517	
	Burr-Brown	OPA27	
	Harris	HAOP27	
	LinearTech	LT1007	
	PMI	OP27	
	Raytheon	OP27	
		RC714	**3666**
OP37	Burr-Brown	OPA37	
	Harris	HAOP37	
	LinearTech	LT1037	
	PMI	OP37	
	Raytheon	OP37	
LF155	AD	AD381	
		AD544	
	Burr-Brown	OPA606	
	LinearTech	LT1022	
		LT1055	
		LT1056	
		OP-15	
	National		
		LF155	
	PMI	OP-15	
	ThomsonCSF	LF155	
LF155A	National	LF155A	
	PMI	PM155A	
LF156	Burr-Brown	OPA156A	
	LinearTech	OP-16	
	MicroPwr	MPOP16	
	National	LF156	
	PMI	OP-16	
	ThomsonCSF	LF156	
LF156A	AMD	LF156A	
	AD	AD544	
	Burr-Brown	**OPA156A**	**3149,3150**
	Fairchild	LF156A	
	National	LF156A	
	PMI	PM156A	
	TI	**TL081**	**718**
LF198	AMD	LF198	
	National	LF198	
	Signetics	**LF198**	**3725**
LF355	**Motorola**	**LF355**	**3616**
	National	LF355	
	PMI	PM355	
	ThomsonCSF	LF355	
LF355A	AMD	LF355A	
	Motorola	LF355A	
	National	LF355A	
	PMI	PM355A	
LF356	**Motorola**	**LF356**	**3616**
	National	LF356	
	PMI	PM356	
	ThomsonCSF	LF356	
LF356A	AMD	LF356A	
	Burr-Brown	**OPA356A**	**3149,3150**
	Motorola	LF356A	
	National	LF356A	
	PMI	PM356A	
LF398	National	LF398	
		LM298	
	PMI	SMP-10	
	Signetics	**LF398**	**3725**
		NE5537	**3692,3720**
LH2108	Intersil	LH2108	
	National	LH2108	
	PMI	MP2108	
		PM2108	
LM10	MCE	MCE-LM10	
	National	LM10	
LM101	AMD	LM101	
	AD	AD101	
	Fairchild	μA101	
	Intersil	AD101	
	Motorola	LM101	
	Raytheon	LM101	
	SiliconG	SG101	
	ThomsonCSF	LM101	
LM101A	National	LM101A	
	TI	LM101A	
LM107	AMD	LM107	
	AD	**AD741S**	**3507**
	Burr-Brown	3500	
	National	LH741A	
		LM107	
	PMI	PM741	
	Raytheon	RC741	
	SiliconG	SG107	
	TI	**LM107**	**718**
	ThomsonCSF	LM107	
LM108	AD	AD108	
	Fairchild	μA108	
	Harris	LM108	
	Intersil	**LM108**	**3600,3601**
	MicroPwr	**MP108**	**688,3607**
	Motorola	**LM108**	**3615**
	National	LM108	
	PMI	PM108	
	SGS	M108	
	SiliconSys	**SSI108**	**3736**
	TI	LM108	
LM108A	AMD	LM108A	
	AD	AD108A	
	Fairchild	UA108A	
	Harris	LM108A	
	MicroPwr	**MP108A**	**688,3607**
	Motorola	**LM108A**	**3615**
	PMI	PM108A	
LM11	**Motorola**	**LM11**	**3616**
	National	LM11	
LM111	AD	AD111	
	Fairchild	μA111	
	Motorola	**LM111**	**3631**
	National	LM111	
	Raytheon	LM111	
	Signetics	**LM111**	**3725**
	SiliconG	SG111	
	TI	**LM111**	**719**
	ThomsonCSF	LM111	
LM117	Fairchild	μA117	
	IPS	**IP117**	**3599**
	MCE	MCE-LM117	
	Motorola	**LM117**	**3625**
	SiliconG	SG117	
	TI	LM117	
	ThomsonCSF	LM117	
		TDC0117	
	Unitrode	UC117	
LM118	Harris	LM118	
	National	LM118	
	TI	LM118	
LM119	National	LM119	
	Signetics	**LM119**	**3723**
LM123	Fairchild	SH123	
		UA138	
		μA123	
	IPS	**IP123**	**3599**
	Motorola	**LM123**	**3622**
		MC78T05	**3622**
	National	LM123	
	SiliconG	SG123	
LM129	National	LM129	
LM134	National	LM134	
LM136	National	LM136	
LM137	**IPS**	**IP137**	**3599**
	MCE	MCE-LM137	
	Motorola	**LM137**	**3625**
	National	LM137	
	ThomsonCSF	LM137	
		TDC0137	
	Unitrode	UC137	
LM138	**IPS**	**IP138**	**3599**
	Micropac	MLM138	
	National	LM138	
LM150	**IPS**	**IP150**	**3599**
	Motorola	**LM150**	**3625**
	National	LM150	
	SiliconG	SG150	
	Unitrode	UC150	
LM185	National	LM185	
LM199	National	LM199	
LM199A	National	LM199A	
LM234	National	LM234	
LM301	AD	AD301	
	Fairchild	μA301A	
	Intersil	AD301	
	LinearTech	LM301A	
	Motorola	LM301	
	National	LM301	
		LM301A	
	NEC	μPC157	
		μPC301	
	Raytheon	LM301	
	RCA	CA301	
		LM301	
	SiliconG	SG301	
	TI	LM301	
		LM301A	
	ThomsonCSF	LM301A	
	Toshiba	TA7506	
LM301A	AD	AD301	
	Fairchild	μA301A	
	Intersil	AD301	
	LinearTech	LM301	
	Motorola	LM301	
	National	LM301	
		LM301A	
	NEC	μPC157	
		μPC301	
	Raytheon	LM301	
	RCA	CA301	
		LM301	
	SiliconG	SG301	
	TI	LM301	
		LM301A	
	ThomsonCSF	LM301A	
	Toshiba	TA7506	
LM308A	AMD	LM308A	
	AD	AD308A	
	Fairchild	UA308A	
	Harris	LM308A	
	MicroPwr	**MP308A**	**3607**
	Motorola	**LM308A**	**3615**
	National	LM308A	
LM311	AD	AD311	
	Fairchild	μA311	
	Motorola	**LM2903**	**3631**
		LM311	**3631**
	National	LM2903	
		LM311	
	NEC	μPC271	
		μPC311	
	Raytheon	LM311	
	RCA	**CA311**	**3672,3677**
		LM311	
	SGS	LM2903	
		LM311	
	Signetics	**LM2903**	**3725**
		LM311	**3721**
	SiliconG	SG311	

(Continued)

Manufacturer Device	Replacement Source	Device	IC Master Page
LM311	TI	LM2903	
		LM311	
	ThomsonCSF	LM2903	
		LM311	
		SFC3111	
LM317	Fairchild	μA317	
	IPS	**IP317**	**3599**
	MCE	MCE-LM317	
	Motorola	**LM317**	**3625**
	National	LM317	
	SGS	LM317	
	SiliconG	SG317	
	TI	LM317	
	ThomsonCSF	LM317	
		TDB0117	
	Unitrode	UC317	
LM318	AD	AD518	
	Harris	LM318	
	National	LM318	
	NEC	μPC159	
	TI	LM318	
	ThomsonCSF	LM318	
		TDB0118	
LM323	Fairchild	SH0323	
		SH323	
		μA323	
		μA78H05	
	IPS	IP123-5	
		IP323	**3599**
	Lambda	LAS1405	
		LAS1905	
	Micropac	M78H05	
	Motorola	**LM323**	**3622**
		MC78T05C	**3622**
	SiliconG	SG323	
	ThomsonCSF	LM323	
LM329	National	LM329	
LM334	National	LM334	
LM336	National	LM336	
LM337	**IPS**	**IP337**	**3599**
	MCE	MCE-LM337	
	Motorola	**LM337**	**3625**
	National	LM337	
	SiliconG	SG337	
	TI	LM337	
	ThomsonCSF	TDB0137	
	Unitrode	UC337	
LM338	**IPS**	**IP338**	**3599**
	Micropac	MLM338	
	National	LM338	
LM350	Fairchild	μA78HGA	
	IPS	**IP350**	**3599**
	Lambda	LAS14U	
		LAS19U	
	Motorola	**LM350**	**3625**
	National	LM350	
	SiliconG	SG350	
	TI	LM350	
LM385	Motorola	LM385	
	National	LM385	
LM399	National	LM399	
LM399A	National	LM399A	
LT1002	MicroPwr	MP207	
		MPOP-207	
	PMI	OP-207	
LT1007	AD	AD510	
		AD517	
	Burr-Brown	OPA27	
	Harris	HAOP27	
	LinearTech	OP27	
	PMI	OP27	
	Raytheon	OP27	
		RC714	**3666**
LT1008	AD	AD517	
	MicroPwr	MPOP08	
	PMI	**OP-08**	**3636**
LT1009	**AD**	**AD1403**	**3136**
	Motorola	**MC1403**	**3628**
	SiliconG	SG3503	
		SG3505	
LT1010	Elantec	EL2002	
		EL2003	**3537,3539**
		ELH0002	**3537**
	Micra	MC0002	
		MC0021	
	National	LH0002	
	OEI	9910	
	TeledyneC	LH0002	
LT1012	MicroPwr	MPOP-12	
	PMI	**OP-12**	**3636**
	TI	OP-12	

◆ Discontinued

The manufacturers report their devices can be used as direct replacements.
Performance details often differ, so compare the specifications considering your requirements.

Linear Technology Corp. (Cont'd)

Manufacturer Device	Replacement Source	Device	IC Master Page
LT1013	**Motorola**	**LM158**	**3617**
	National	LM158A	
	Raytheon	RM4139	
	RCA	**CA158A**	**3672**
	Signetics	**LM158**	**3729**
	TI	**LM158**	**718**
LT1014	MicroPwr	OP11	
	National	LM148	
	PMI	OP11	
	Raytheon	LM148	
		RM4156	
		RM4158	
	TI	**LM148**	**719**
LT1021	**Burr-Brown**	**REF10**	**3151**
	MicroPwr	**MPREF-10**	**688,3607**
	PMI	REF-10	
LT1022	AD	AD381	
		AD544	
	Burr-Brown	OPA606	
	LinearTech	LF155	
		LT1055	
		LT1056	
		OP-15	
	National		
		LF155	
	PMI	OP-15	
	ThomsonCSF	LF155	
LT1033	National	LM133	
		LM333	
LT1037	Burr-Brown	OPA37	
	Harris	HAOP37	
	LinearTech	OP37	
	PMI	OP37	
	Raytheon	OP37	
LT1055	AD	AD381	
		AD544	
	Burr-Brown	OPA606	
	LinearTech	LF155	
		LT1022	
		LT1056	
		OP-15	
	National		
		LF155	
	PMI	OP-15	
	ThomsonCSF	LF155	
LT1056	AD	AD381	
		AD544	
	Burr-Brown	OPA606	
	LinearTech	LF155	
		LT1022	
		LT1055	
		OP-15	
	National		
		LF155	
	PMI	OP-15	
	ThomsonCSF	LF155	
LT1524	Cherry	CS1524	
	Exar	**XR1524**	**3558**
	IPS	**IP1524**	**3599**
	National	LM1524	
	RCA	CA1524	
	SGS	SG1524	
		UC1524A	
	SiliconG	SG1524	
	Sprague	ULS-8124	
	TI	**SG1524**	**720**
	Unitrode	**UC1524A**	**3739,3739**
LT1525A	Cherry	CS1525A	
	Exar	**XR1525A**	**3559**
	IPS	**IP1525A**	**3599**
	Motorola	**SG1525A**	**3626**
	SGS	SG1524A	
	SiliconG	SG1525A	
	Siliconix	PWM125	
	Sprague	ULS-8125	
	TI	SG1525A	
	Unitrode	**UC1525A**	**3739**
LT1527A	Cherry	CS1527A	
	IPS	IP1527A	
	Motorola	**SG1527A**	**3626**
	SGS	SG1527A	
	SiliconG	SG1527A	
	Siliconix	PWM27	
	Sprague	ULS-8125	
	TI	SG1527A	
	Unitrode	**UC1527A**	**3739**
LT2525A	Cherry	CS2525A	
	Exar	XR2525A	
	IPS	**IP2525A**	**3599**
	Motorola	**SG2525A**	**3626**
	SiliconG	SG2525A	
	Siliconix	PWM25B	
	Sprague	ULQ-8125	
	TI	SG2525A	
	Unitrode	**UC2525A**	**3739**
LT2527A	Cherry	CS2527A	
	Exar	XR2527A	
	IPS	IP2527A	
	Motorola	**SG2527A**	**3626**
	SiliconG	SG2527A	
	TI	SG2527A	
	Unitrode	**UC2527A**	**3739**
LT3525A	Exar	XR3525A	
	IPS	**IP3525A**	**3599**
	Motorola	**SG3525A**	**3626**
	SGS	SG3525A	
	SiliconG	SG3525A	
	Siliconix	PWM25	
	TI	SG3525A	
	Unitrode	**UC3525A**	**3739**
LT3527A	Cherry	CS3527	
		CS3527A	
	Exar	**XR3527A**	**3559**
	IPS	**IP3527**	**3599**
	Motorola	**SG3527A**	**3626**
	SGS	SG3527A	
	SiliconG	SG3527A	
	TI	SG3527A	
LTC1044	Datel	VI-7660	
	Intersil	**ICL7660**	**3603**
	Maxim	ICL7660	
	Siliconix	SI7660	
	TeledyneC	TSC7660	
LTC1052	**Datel**	**AM-7650**	**3158,3163**
	Intersil	ICL7650	
	LinearTech	LTC7652	
	Maxim	ICL7650	
	Siliconix	**SI7135**	**3248,3254**
	TeledyneC	TSC7650	
LTC7652	**Datel**	**AM-7650**	**3158,3163**
	Intersil	ICL7650	
	LinearTech	LTC1052	
	Maxim	ICL7650	
	Siliconix	**SI7135**	**3248,3254**
	TeledyneC	TSC7650	
LTREF01	AD	AD581	
	Harris	HA1608	
	LinearTech	REF-01A	
	Maxim	REF01	
	MicroPwr	MP5531	
		MPREF01	
	Motorola	MC1400AG10	
		MC1400AU10	
		MC1500AU10	
	PMI	REF-01AZ	
		REF01	
	Raytheon	**REF-01**	**3652**
		REF01	
	TeledyneS	TSC9495	
LTREF02	LinearTech	REF-02E	
	Maxim	REF02	
	MicroPwr	MP5532	
	Motorola	MC1400AU5	
		MC1500AU5	
	PMI	REF-02EZ	
		REF02	
	Raytheon	REF02	
	TeledyneS	TSC9496	
OP-07	AD	AD517	
		OP-07	
	Fairchild	UA714	
	Harris	HA-OP07	
		HA5130	
		HA5135	
	Micra	MC0021	
	MicroPwr	MPOP07	
	NEC	UPC264	
	PMI	OP07	
	Raytheon	OP07	
	TI	OP07D	
OP-15	AD	AD381	
		AD544	
	Burr-Brown	OPA606	
	LinearTech	LF155	
		LT1022	
		LT1055	
OP-15	LinearTech	LT1056	
	National		
		LF155	
	PMI	OP-15	
	ThomsonCSF	LF155	
OP-16	Burr-Brown	OPA156A	
	LinearTech	LF156	
	MicroPwr	MPOP16	
	National	LF156	
	PMI	OP-16	
	ThomsonCSF	LF156	
OP-227	MicroPwr	MPOP-227	
	PMI	OP-227	
OP05	AD	AD510	
	MicroPwr	MPOP05	
	PMI	OP05	
OP27	Burr-Brown	OP27	
	MicroPwr	MP027	
	PMI	OP27	
	Raytheon	OP-27	
OP37	Burr-Brown	OP37	
	MicroPwr	MPOP37	
	PMI	OP37	
	Raytheon	OP-37	
REF-01A	AD	AD581	
	Harris	HA1608	
	LinearTech	LTREF01	
	Maxim	REF01	
	MicroPwr	MP5531	
		MPREF01	
	Motorola	MC1400AG10	
		MC1400AU10	
		MC1500AU10	
	PMI	REF-01AZ	
		REF01	
	Raytheon	**REF-01**	**3652**
		REF01	
	TeledyneS	TSC9495	
REF-01E	Motorola	MC1400AU10	
	PMI	REF-01EZ	
REF-02A	Motorola	MC1500AU5	
	PMI	REF-02AZ	
REF-02E	LinearTech	LTREF02	
	Maxim	REF02	
	MicroPwr	MP5532	
	Motorola	MC1400AU5	
		MC1500AU5	
	PMI	REF-02EZ	
		REF02	
	Raytheon	REF02	
	TeledyneS	TSC9496	

(Continued)

LMS Electronics

Manufacturer Device	Replacement Source	Device	IC Master Page
NVR2	Mostek	MK48Z02	

Logic Devices Inc.

Manufacturer Device	Replacement Source	Device	IC Master Page
L10C23	TRW-LSI	TDC1023	
L29C520	AMD	AM29520	
	LogicDev	L29CS20	
L29C521	AMD	AM29521	
L29CS20	AMD	AM29520	
	LogicDev	L29C520	
L429C01	AMD	AM29C101	
LMA1009	AD	ADSP1009	
	TRW-LSI	TDC1009	
		TDC2009	
		TMC2009	
LMA1010	AMD	AM29510	
		AMD29510	
		AMD29L510	
	AD	ADSP1010	
		ADSP1010A	
	Cypress	CY7C510	
	IDT	**IDT7210**	**1084,1088**
	MicroPwr	**MP1010**	**688**
	TI	74HCT9510	
		SN74HCT9510	
	TRW-LSI	TDC1010	
		TDC2010	
		TMC2010	
		TMC2110	
	Weitek	WTL1010	
		WTL2010	
		WTL2044	
		WTL2245	
LMU08	AMD	AM25S557	
	AD	ADSP1080	
	TRW-LSI	MPY08HU	
		MPY8UHJ	
LMU13	**IDT**	**IDT7213**	**1087,1088**
LMU16	AMD	AM29516	
		AM29C516	
	AD	ADSP1016	
	Cypress	CY7C516	
	IDT	**IDT7216**	**1086,1088**
	TRW-LSI	MPY016H	
		MPY016K	
		MPY16HJ	
	Weitek	WTL1016	
		WTL1516	
		WTL2516	
LMU17	AMD	AM29517	
	Cypress	CY7C517	
	IDT	7217	
	Weitek	WTL2517	
LMU18	MMI	SN54556	
		SN74556	
LMU557	AMD	AM25S557	
	MMI	SN54557	
		SN74557	
		SN74S557	**1103**
LMU558	AMD	AM25S557	
		AM25S558	
	Fairchild	74F558	
	MMI	74S558	
		SN54558	
		SN74558	
LMU8U	AD	ADSP1081	

LSI Computer Systems

Manufacturer Device	Replacement Source	Device	IC Master Page
LS7231	Siemens	S576A	
LS7232	Siemens	S576B	
LS7233	Siemens	S576C	
LS7234	Siemens	S576D	

LSI logic

Manufacturer Device	Replacement Source	Device	IC Master Page
◆LC10000	CalDevices	HC10000	
	GouldAMI	UA-5	
◆LC12600	CalDevices	HC12600	
	GouldAMI	UA-6	
◆LC3100	CalDevices	HC3100	
	GouldAMI	UA-1	
◆LC4100	CalDevices	HC4100	
	GouldAMI	UA-2	
◆LC5400	CalDevices	HC5400	
	GouldAMI	UA-3	
◆LC7700	CalDevices	HC7700	
	GouldAMI	UA-4	
LL-5220	**RCA**	**PA52200**	**4742**
LL5080	**Motorola**	**HCA6306**	**4718**
	National	SCX6306	
	RCA	PAS0800	
	Toshiba	**TC15G008**	**4799**
LL5140	**Motorola**	**HCA6312**	**4718**
	National	SCX6312	
	RCA	**PA51400**	**4742**
	Toshiba	**TC15G014**	**4799**
LL5220	**Motorola**	**HCA6324**	**4718**
	National	SCX6324	
		SCX6325	
	RCA	**PA52200**	**4742**
	Toshiba	**TC15G022**	**4799**
LL5320	**RCA**	**PA53200**	**4742**
	Toshiba	**TC15G032**	**4799**
LL5420	**Motorola**	**HCA6348**	**4718**
	National	SCX6348	
	RCA	**PA54200**	**4742**
	Toshiba	**TC15G042**	**4799**
LL5600	**RCA**	**PA56000**	**4742**
	Toshiba	**TC15G060**	**4799**
LL7050	**Toshiba**	**TC17G005**	**4799**
LL7080	**Toshiba**	**TC17G008**	**4799**
LL71000	Toshiba	TC17G100	
LL7140	National	SCX6212	
	Toshiba	**TC17G014**	**4799**
LL7220	National	SCX6224	
		SCX6225	
	Toshiba	**TC17G022**	**4799**
LL7320	**Toshiba**	**TC17G032**	**4799**
LL7420	National	SCX6248	
	Toshiba	**TC17G042**	**4799**
LL7600	National	SCX6260	
	Toshiba	TC17G060	

Master Logic Corporation

Manufacturer Device	Replacement Source	Device	IC Master Page
MASG-050	Nitron	MA-050	
MASG-100	Nitron	MA-100	
MASG-200	Nitron	MA-200	
MASG-400	Nitron	MA-400	

◆ Discontinued

Bold face device numbers indicate manufacturers data is provided in the IC Master on the pages noted.

Master Logic Corporation (Cont'd)

Manufacturer Device	Replacement Source	Device	IC Master Page
MASG1200	Nitron	MA1200	
MASG800	Nitron	MA800	
ML7003	SPI	SP7003	
ML7005	SPI	SP7005	
ML7010	SPI	SP7010	
ML7015	SPI	SP7015	
ML7020	SPI	SP7020	

Matra Design Systems

Manufacturer Device	Replacement Source	Device	IC Master Page
MA0250	Nitron	MH0250	
MA0400	Nitron	MH0400	
MA0800	Nitron	MH0800	
MA1200	Nitron	MH1200	

Maxim Integrated Products

Manufacturer Device	Replacement Source	Device	IC Master Page
AD2701	AD	AD2701	
	HybridSys	R675-5	
	HyComp	HC2701	
		HC2710	
AD2710	AD	AD2710	
	HyComp	HC201	
		HC2711	
AD578	AD	AD578	
ICL7106	**Intersil**	**ICL7106**	**3198**
	TeledyneS	TSC7106	
ICL7107	**Intersil**	**ICL7107**	**3198**
	TeledyneS	TSC7107	
ICL7109	**Datel**	**ADC-7109**	**3159**
	Intersil	**ICL7109**	**3199**
	TeledyneS	TSC7109	
ICL7116	**Intersil**	**ICL7116**	**3198**
	TeledyneS	TSC7116	
ICL7117	**Intersil**	**ICL7117**	**3198**
	Maxim	ICL7126	
	TeledyneC	TSC7117	
	TeledyneS	TSC7117	
ICL7126	**Intersil**	**ICL7117**	**3198**
	Maxim	ICL7117	
	TeledyneC	TSC7117	
	TeledyneS	TSC7117	
ICL7129	**Intersil**	**ICL7129**	**3198**
ICL7135	**Intersil**	**ICL7135**	**3199**
	Siliconix	**SI7135**	**3248,3254**
		Si7135	
	TeledyneS	TSC7135	
ICL7136	**Intersil**	**ICL7136**	**3198**
ICL7217	**Intersil**	**ICM7217**	**1089**
ICL7611	Harris	HA-2720	
	Intersil	ICL7611	
		ICL8021	
		LM4250	
	Motorola	**MC1776**	**3616**
	National	LF441	
		LM4250	
	PMI	OP20	
		OP21	
		OP22	
	SGS	MC1776	
	Solitron	UC4250	
	TI	TLC251	
		TLC271	
	ThomsonCSF	μA776	
ICL7612	Intersil	ICL7612	
ICL7614	Intersil	ICL7614	
ICL7616	Intersil	ICL7616	
ICL7621	Intersil	ICL7621	
	PMI	OP220	
		OP221	
	TI	TLC252	
		TLC272	
ICL7622	Intersil	ICL7622	
ICL7631	Intersil	ICL7631	
ICL7632	Intersil	ICL7632	
ICL7641	Intersil	ICL7641	
	TI	TLC254	
		TLC274	
ICL7642	Intersil	ICL7642	
ICL7650	**Datel**	**AM-7650**	**3158,3163**
	Intersil	ICL7650	
	LinearTech	LTC1052	
		LTC7652	
	Siliconix	**SI7135**	**3248,3254**
	TeledyneC	TSC7650	
ICL7652	**Intersil**	**ICL7652**	**3601**
	LinearTech	LTC1052	
	Siliconix	SI7652	
ICL7660	Datel	VI-7660	
	Intersil	**ICL7660**	**3603**
	LinearTech	LTC1044	
	Siliconix	SI7660	
	TeledyneC	TSC7660	
ICL7663	**Intersil**	**ICL7663**	**3603**
ICL7664	**Intersil**	**ICL7664**	**3603**
ICL7665	**Intersil**	**ICL7665**	**3604**
ICL8069	AD	AD589	
	Ferranti	ZN423	
	Intersil	**ICL8069**	**3604**
	MicroPwr	**MP5010**	**688,3607**
	National	LM113	
		LM313	
	TeledyneS	9491	
		T-SC9491	
ICM7211	Hughes	H7211	
	Intersil	**ICM7211**	**1091**
	RCA	**CD22104**	**1147**
		CD22105	**1147**
	TeledyneS	TSC7211	
ICM7212	**Intersil**	**ICM7212**	**1091**
	TeledyneS	TSC7212	
ICM7218	Intersil	ICM7218	
ICM7224	**Intersil**	**ICM7224**	**1089**
ICM7225	**Intersil**	**ICM7225**	**1089**
ICM7231	**Intersil**	**ICM7231**	**1091**
ICM7232	**Intersil**	**ICM7232**	**1091**
ICM7233	**Intersil**	**ICM7233**	**1091**
ICM7234	**Intersil**	**ICM7234**	**1091**
ICM7240	Exar	XR2240	
	Intersil	**ICM7240**	**1090**
ICM7242	Exar	XR2242	
ICM7250	**Intersil**	**ICM7250**	**1090**
ICM7260	**Intersil**	**ICM7260**	**1090**
ICM7555	**Intersil**	**ICM7555**	**1090**
	TI	TLC555	
ICM7556	**Intersil**	**ICM7556**	**1090**
LH0033	**Elantec**	**EL2004**	**3537,3540**
		EL2005	**3537,3541**
		ELH0033	**3537**
	Harris	HA-5033	
	Micra	MC0033	
	National	LH0033	
	TeledyneC	LH0033	
	TeledyneP	1359	
LH0063	National	LH0063	
	OEI	9963	
LH0101	**Apex**	**PA02**	**3525**
	Elantec	**ELH0101**	**3537**
	National	LH0101	
MF10	Harris	HF-10	
MM74C945	National	MM74C945	
MM74C946	National	MM74C946	
MM74C947	National	MM74C947	
REF01	AD	AD581	
	Harris	HA1608	
	LinearTech	LTREF01	
		REF-01A	
	MicroPwr	MP5531	
		MPREF01	
	Motorola	MC1400AG10	
		MC1400AU10	
		MC1500AU10	
	PMI	REF-01AZ	
		REF01	
	Raytheon	**REF-01**	**3652**
		REF01	
	TeledyneS	TSC9495	
REF02	LinearTech	LTREF02	
		REF-02E	
	MicroPwr	MP5532	
	Motorola	MC1400AU5	
		MC1500AU5	
	PMI	REF-02EZ	
		REF02	
	Raytheon	REF02	
	TeledyneS	TSC9496	

MCE Semiconductor

Manufacturer Device	Replacement Source	Device	IC Master Page
MCE-386	National	LM386	
MCE-4194	Exar	XR4194	
	Raytheon	RC4194	
		RM4194	
MCE-565	AD	AD565	
	Fairchild	μA565	
	Harris	HI565A	
MCE-567	Exar	XR2567	
		XR567	
	National	LM567	
	Signetics	**NE567**	**3720**
MCE-567	**Signetics**	**SE567**	**3728**
	Samsung	LM567	
MCE-571	AD	AD571	
	Fairchild	μA571	
MCE-820	SGS	TBA820	
	TI	SN76001	
	ThomsonCSF	TBA820	
MCE-A20	Exar	XRA100	
		XRM100	
	Interdesign	MOA	
		MOM	
	MCE	MCE-A20A	
MCE-A20A	Exar	XRA100	
		XRM100	
	Interdesign	MOA	
		MOM	
	MCE	MCE-A20	
MCE-A20B	Exar	XRB100	
	Interdesign	MOB	
MCE-A20C	Exar	XRC100A	
	Interdesign	MOC	
MCE-A20E	Cherry	CS2000	
	Exar	XRE100	
	Interdesign	MOE	
MCE-A20F	Cherry	CS3000	
	Exar	XRF100	
	Interdesign	MCF	
		MOF	
MCE-A20G	Cherry	CS2500	
	Exar	XRG100	
	Interdesign	MOG	
MCE-A20H	Exar	XRH100	
	Interdesign	MOH	
MCE-A20J	Exar	XRJ100	
	Interdesign	MOJ	
MCE-A20L	Cherry	CS3200	
	Exar	XRL100	
	Interdesign	MOL	
MCE-A20N	Interdesign	MON	
MCE-A20P	Interdesign	MOP	
MCE-A40D	Exar	XRD100	
	Interdesign	MOD	
◆MCE-AD15	**Exar**	**XR400**	**4618**
	MCE	MCE-AD15C	
MCE-AD15C	**Exar**	**XR400**	**4618**
MCE-D15B	**Exar**	**XR500**	**4618**
MCE-LM10	LinearTech	LM10	
	National	LM10	
MCE-LM117	Fairchild	μA117	
	IPS	**IP117**	**3599**
	LinearTech	LM117	
	Motorola	**LM117**	**3625**
	SiliconG	SG117	
	TI	LM117	
	ThomsonCSF	LM117	
		TDC0117	
	Unitrode	UC117	
MCE-LM137	**IPS**	**IP137**	**3599**
	LinearTech	LM137	
	Motorola	**LM137**	**3625**
	National	LM137	
	ThomsonCSF	LM137	
		TDC0137	
	Unitrode	UC137	
MCE-LM217	**IPS**	**IP217**	**3599**
	Motorola	**LM217**	**3625**
	National	LM217	
	SiliconG	SG217	
	TI	LM217	
	ThomsonCSF	TDE0117	
	Unitrode	UC217	
MCE-LM237	**IPS**	**IP237**	**3599**
	Motorola	**LM237**	**3625**
	National	LM237	
	TI	LM237	
	Unitrode	UC237	
MCE-LM317	Fairchild	μA317	
	IPS	**IP317**	**3599**
	LinearTech	LM317	
	Motorola	**LM317**	**3625**
	National	LM317	
	SGS	LM317	
	SiliconG	SG317	
	TI	LM317	
	ThomsonCSF	LM317	
		TDB0117	
	Unitrode	UC317	
MCE-LM337	**IPS**	**IP337**	**3599**
	LinearTech	LM337	
	Motorola	**LM337**	**3625**
	National	LM337	
	SiliconG	SG337	
MCE-LM337	TI	LM337	
	ThomsonCSF	TDB0137	
	Unitrode	UC337	
MCE-VFC32	AD	ADVFC32	
	Burr-Brown	**VFC32**	**3148,3153**
	MicroPwr	MPVFC32	
MCE566	AD	AD566	
MCE570	AD	AD570	
MCE574	AD	AD574	
	Burr-Brown	ADC574A	
	Datel	ADC574A	
	Harris	HI574A	
	HybridSys	HS574	
	MicroNet	**MN574A**	**3203**
	MicroPwr	MP574	
	TeledyneP	TP574A	

Micra Corp.

Manufacturer Device	Replacement Source	Device	IC Master Page
MC0002	Elantec	EL2002	
		EL2003	**3537,3539**
		ELH0002	**3537**
	LinearTech	LT1010	
	Micra	MC0021	
	National	LH0002	
	OEI	9910	
	TeledyneC	LH0002	
MC0003	National	LH0003	
MC0004	National	LH0004	
MC0006	National	DH0006	
MC0008	National	DH0008	
MC0021	AD	AD517	
		OP-07	
	Fairchild	UA714	
	Harris	HA-OP07	
		HA5130	
		HA5135	
	LinearTech	OP-07	
	MicroPwr	MPOP07	
	NEC	UPC264	
	PMI	OP07	
	Raytheon	OP07	
	TI	OP07D	
MC0024	National	LH0024	
MC0032	**Elantec**	**EL2006**	**3537,3542**
		ELH0032	**3537**
	Harris	HA2541	
	National	LH0032	
	TeledyneC	LH0032	
	TeledyneP	0032	
MC0033	**Elantec**	**EL2004**	**3537,3540**
		EL2005	**3537,3541**
		ELH0033	**3537**
	Harris	HA-5033	
	Maxim	LH0033	
	National	LH0033	
	TeledyneC	LH0033	
	TeledyneP	1359	
MC0041	Elantec	LH0041	
	National	LH0041	

Micrel

Manufacturer Device	Replacement Source	Device	IC Master Page
M-IC2260	Motorola	MC2260	
MIC2257	Motorola	MC2257	
MIC2259	Motorola	MC2259	
MIC5009	Mostek	MK5009	
MIC50396	Mostek	MK50396	
MIC50397	Mostek	MK50397	
MIC50398	Mostek	MK50398	
MIC50399	Mostek	MK50399	
MIC74HCT240	CTI	74HCT240	
	Hitachi	HD74HCT240	
	MicroTech	74HCTR240	
	Mitel	MD74HCT240	
	Motorola	MC74HCT240	
	National	MM74HCT240	
	Nitron	NC74HCT240	
	Plessey	MV74HCT240	
	RCA	**CD74HCT240**	**1149**
	SPI	SP74HCT240	
	SGS	M74HCT240	
	Signetics	**74HCT240**	**1157**
	SSS	SS74HCT240	
	Supertex	SI74HCT240	
	TI	SN74HCT240	
	Toshiba	**TC74HCT240**	**1363**
	Universal	US74HCT240	
	Zytrex	ZX74HCT240-2	
MIC74HCT241	CTI	74HCT241	
	Hitachi	HD74HCT241	
	MicroTech	74HCTR241	

(Continued)

◆ Discontinued

The manufacturers report their devices can be used as direct replacements.
Performance details often differ, so compare the specifications considering your requirements.

Micrel (Cont'd)

Manufacturer Device	Replacement Source	Device	IC Master Page
MIC74HCT241	Mitel	MD74HCT241	
	Motorola	MC74HCT241	
	National	MM74HCT241	
	Nitron	NC74HCT241	
	Plessey	MV74HCT241	
	RCA	**CD74HCT241**	**1149**
	SPI	SP74HCT241	
	SGS	M74HCT241	
	Signetics	**74HCT241**	**1157**
	SSS	SS74HCT241	
	Supertex	SI74HCT241	
	TI	SN74HCT241	
	Toshiba	**TC74HCT241**	**1363**
	Universal	US74HCT241	
	Zytrex	ZX74HCT241-2	
MIC74HCT242	Hitachi	HD74HCT242	
	Nitron	NC74HCT242	
	RCA	**CD74HCT242**	**1149**
	Signetics	**74HCT242**	**1158**
	TI	SN74HCT242	
	Universal	US74HCT242	
MIC74HCT243	Hitachi	HD74HCT243	
	RCA	CD74HCT243	
	Signetics	**74HCT243**	**1158**
	TI	SN74HCT243	
	Universal	US74HCT243	
MIC74HCT244	CTI	74HCT244	
	Hitachi	HD74HCT244	
	MicroTech	74HCTR244	
	Mitel	MD74HCT244	
	Motorola	MC74HCT244	
	National	MM74HCT244	
	Nitron	NC74HCT244	
	Plessey	MV74HCT244	
	RCA	**CD74HCT244**	**1149**
	SPI	SP74HCT244	
	SGS	M74HCT244	
	Signetics	**74HCT244**	**1158**
	SSS	SS74HCT244	
	Supertex	SI74HCT244	
	TI	SN74HCT244	
	Toshiba	**TC74HCT244**	**1363**
	Universal	US74HCT244	
	Zytrex	ZX74HCT244-2	
MIC74HCT245	CTI	74HCT245	
	GTEMicro	G74SC245	
	Hitachi	HD74HCT245	
	MicroTech	74HCTR245	
	Mitel	MD74HCT245	
	Motorola	MC74HCT245	
	National	MM74HCT245	
	Plessey	MV74HCT245	
		MV74SC245	
	RCA	**CD74HCT245**	**1149**
	SPI	SP74HCT245	
	SGS	M74HCT245	
	Signetics	**74HCT245**	**1158**
	SSS	SS74HCT245	
	TI	SN74HCT245	
	Toshiba	**TC74HCT245**	**1363**
	Universal	US74HCT245	
MIC74HCT373	CTI	74HCT373	
	GTEMicro	G74SC373	
	Hitachi	HD74HCT373	
	MicroTech	74HCTR373	
	Mitel	MD74HCT373	
	Motorola	MC74HCT373	
	National	MM74HCT373	
	Nitron	NC74HCT373	
	Plessey	MV74HCT373	
		MV74SC373	
	RCA	**CD74HCT373**	**1150**
	SPI	SP74HCT373	
	SGS	M74HCT373	
	Signetics	**74HCT373**	**1158**
	SSS	SS74HCT373	
	Supertex	SI74HCT373	
	TI	SN74HCT373	
	Toshiba	**TC74HCT373**	**1363**
	Universal	US74HCT373	
	Zytrex	ZX74HCT373-2	
MIC74HCT374	CTI	74HCT374	
	GTEMicro	G74SC374	
	Hitachi	HD74HCT374	
	MicroTech	74HCTR374	
	Mitel	MD74HCT374	
	Motorola	MC74HCT374	
	National	MM74HCT374	
	Nitron	NC74HCT374	
	Plessey	MV74HCT374	
			(Continued)
MIC74HCT374	Plessey	MV74SC374	
	RCA	CD74HCT374	
	SPI	SP74HCT374	
	SGS	M74HCT374	
	Signetics	**74HCT374**	**1158**
	SSS	SS74HCT374	
	Supertex	SI74HCT374	
	TI	SN74HCT374	
	Toshiba	**TC74HCT374**	**1363**
	Universal	US74HCT374	
	Zytrex	ZX74HCT374-2	
MIC74HCT533	CTI	74HCT533	
	Hitachi	HD74HCT533	
	MicroTech	74HCTR533	
	Motorola	MC74HCT533	
	Plessey	MV74HCT533	
	RCA	**CD74HCT533**	**1150**
	Signetics	**74HCT533**	**1159**
	SSS	SS74HCT533	
	TI	SN74HCT533	
	Universal	US74HCT533	
	Zytrex	ZX74HCT533	
MIC74HCT534	CTI	74HCT534	
	Hitachi	HD74HCT534	
	MicroTech	74HCTR534	
	Motorola	MC74HCT534	
	Plessey	MV74HCT534	
	RCA	CD74HCT534	
	Signetics	**74HCT534**	**1159**
	SSS	SS74HCT534	
	TI	SN74HCT534	
	Universal	US74HCT534	
	Zytrex	ZX74HCT534-2	
MIC74HCT540	CTI	74HCT540	
	Hitachi	HD74HCT540	
	MicroTech	74HCTR540	
	Mitel	MD74HCT540	
	Motorola	MC74HCT540	
	Plessey	MV74HCT540	
	RCA	**CD74HCT540**	**1149**
	SPI	SP74HCT540	
	SGS	M74HCT540	
	Signetics	**74HCT540**	**1159**
	SSS	SS74HCT540	
	TI	SN74HCT540	
	Toshiba	**TC74HCT540**	**1363**
	Universal	US74HCT540	
	Zytrex	ZX74HCT540-2	
MIC74HCT541	CTI	74HCT541	
	Hitachi	HD74HCT541	
	MicroTech	74HCTR541	
	Mitel	MD74HCT541	
	Motorola	MC74HCT541	
	Plessey	MV74HCT541	
	RCA	**CD74HCT541**	**1149**
	SPI	SP74HCT541	
	SGS	M74HCT541	
	Signetics	**74HCT541**	**1159**
	SSS	SS74HCT541	
	TI	SN74HCT541	
	Toshiba	**TC74HCT541**	**1363**
	Universal	US74HCT541	
	Zytrex	ZX74HCT541-2	
MIC74HCT563	CTI	74HCT563	
	Hitachi	HD74HCT563	
	MicroTech	74HCTR563	
	Motorola	MC74HCT563	
	Plessey	MV74HCT563	
	RCA	**CD74HCT563**	**1150**
	SGS	M74HCT563	
	Signetics	**74HCT563**	**1159**
	SSS	SS74HCT563	
	TI	SN74HCT563	
	Toshiba	**TC74HCT563**	**1363**
	Universal	US74HCT563	
MIC74HCT564	CTI	74HCT564	
	Hitachi	HD74HCT564	
	MicroTech	74HCTR564	
	Motorola	MC74HCT564	
	Plessey	MV74HCT564	
		MV74HCT573	
	RCA	CD74HCT564	
	SGS	M74HCT564	
	Signetics	**74HCT564**	**1159**
	SSS	SS74HCT564	
	TI	SN74HCT564	
	Toshiba	**TC74HCT564**	**1363**
	Universal	US74HCT564	
MIC74HCT573	CTI	74HCT573	
	Hitachi	HD74HCT573	
	MicroTech	74HCTR573	
	Mitel	MD74HCT573	
			(Continued)
MIC74HCT573	Motorola	MC74HCT573	
	RCA	**CD74HCT573**	**1150**
	SPI	SP74HCT573	
	SGS	M74HCT573	
	Signetics	**74HCT573**	**1159**
	SSS	SS74HCT573	
	TI	SN74HCT573	
	Toshiba	TC74HCT573	
	Universal	US74HCT573	

Micro Networks

Manufacturer Device	Replacement Source	Device	IC Master Page
DAC80	AD	ADDAC80	
		ADDAC85	
		DAC80	
	Burr-Brown	DAC80	
		DAC800	
		DAC85	
		DAC850	
	Datel	DAC-85	
		DAC-85C	
		DAC-HZ12B	
	Harris	HI5685	
	HybridSys	DAC9356	
		HSDAC80	
	MicroNet	DAC85	
	National	DAC1280	
		DAC1285	
	TeledyneP	TPDAC80	
DAC85	AD	ADDAC80	
		ADDAC85	
		DAC80	
	Burr-Brown	DAC80	
		DAC800	
		DAC85	
		DAC850	
	Datel	DAC-85	
		DAC-85C	
		DAC-HZ12B	
	Harris	HI5685	
	HybridSys	DAC9356	
		HSDAC80	
	MicroNet	**DAC80**	**3204**
	National	DAC1280	
		DAC1285	
	TeledyneP	TPDAC80	
MN0300A	AD	HTC0300A	
	MicroNet	**MN376**	**3205**
		MN377	
	TeledyneP	4860	
MN0405	**AD**	**HDG-0405**	**3115**
MN050	DDC	ADH-050	
MN0605	**AD**	**HDG-0605**	**3115**
MN0805	**AD**	**HDG-0805**	**3115**
MN2020	HybridSys	HS2020	
MN3020	HybridSys	HS3020	
MN3349	HybridSys	DAC349	
MN346	**AD**	**AD346**	**3140**
MN370	AD	AD370	
		AD371	
	HybridSys	DAC346	
		DAC347	
		DAC356	
	MicroNet	MN371	
MN371	AD	AD370	
		AD371	
	HybridSys	DAC346	
		DAC347	
		DAC356	
	MicroNet	**MN370**	**3204**
MN376	AD	HTC0300A	
	MicroNet	**MN0300A**	**3205**
		MN377	
	TeledyneP	4860	
MN377	AD	HTC0300A	
	MicroNet	**MN0300A**	**3205**
		MN376	**3205**
	TeledyneP	4860	
MN3860	AD	AD3860	
	HybridSys	HS3860	
	DDC	DAC-SL	
◆MN5065	Motorola	LM3065	
		M5140	
	National	LM3064	
	RCA	CA3065	
	Sanyo	LA1365	
	TI	SN76666	
MN5101	**Datel**	**ADC-5101**	**3160,3162**
	DDC	DDC-5101	
MN5131	HybridSys	HS5131	
MN5150	HybridSys	HS5150	
MN5201	AD	AD5201	
MN5202	AD	AD5202	
MN5203	AD	AD5203	
MN5204	AD	AD5204	
MN5205	AD	AD5205	
MN5206	AD	AD5206	
MN5207	AD	AD5207	
MN5210	AD	AD5210	
	Datel	**ADC-5210**	**3160,3162**
	DDC	DDC-5210	
MN5211	AD	AD5211	
	Datel	**ADC-5211**	**3160,3162**
	DDC	DDC-5211	
MN5212	AD	AD5212	
	Datel	**ADC-5212**	**3160,3162**
	DDC	DDC-5212	
MN5213	AD	AD5213	
	Datel	**ADC-5213**	**3160,3162**
MN5214	AD	AD5214	
	Datel	**ADC-5214**	**3160,3162**
	HybridSys	MN5214	
	TeledyneP	TP5214	
MN5215	AD	AD5215	
	Datel	**ADC-5215**	**3160,3162**
MN5216	**Datel**	**ADC-5216**	**3160,3162**
	HybridSys	HS5216	
	DDC	DDC-5216	
MN5240	AD	ADADC84	
		ADADC85	
		ADADC85S	
	Burr-Brown	ADC84	
		ADC85	
	Datel	ADC-84	
		ADC-85	
		ADC-87	
		ADC-HX12B	
		ADC-HZ12B	
		ADC-HZ12BGZ	
	HybridSys	ADC581	
		ADC581B	
		HSADC85	
		HSADC85C	
	DDC	ADH-8585-1	
		DDC-5240	
		DDCADC85	
		DDCADC87	
	MicroNet	MNADC84	
		MNADC85	
		MNADC87	**3203**
MN5243	DDC	ADC-00401	
MN5250	HybridSys	HS5250	
MN5251	HybridSys	HS5251	
MN5252	HybridSys	HS5252	
MN5253	HybridSys	HS5253	
MN565A	AD	AD565	
		AD565A	
	Fairchild	UA565	
	Harris	HI565A	
	Motorola	MC3412	
	TeledyneP	TP565A	
MN574A	AD	AD574	
	Burr-Brown	ADC574A	
	Datel	ADC574A	
	Harris	HI574A	
	HybridSys	HS574	
	MCE	MCE574	
	MicroPwr	MP574	
	TeledyneP	TP574A	
MN7150	Datel	HDAS-16	
		HDAS-8	
MN815	Datel	ADC815	
MN825	Datel	ADC825	
MNADC80	AD	ADADC80	
	Burr-Brown	ADC80	
MNADC84	AD	ADADC84	
		ADADC85	
		ADADC85S	
	Burr-Brown	ADC84	
		ADC85	
	Datel	ADC-84	
		ADC-85	
		ADC-87	
		ADC-HX12B	
		ADC-HZ12B	
		ADC-HZ12BGZ	
	HybridSys	ADC581	
			(Continued)

◆ Discontinued

Bold face device numbers indicate manufacturers data is provided in the IC Master on the pages noted.

Micro Networks (Cont'd)

Manufacturer Device	Replacement Source	Device	IC Master Page
MNADC84	HybridSys	ADC581B	
		HSADC85	
		HSADC85C	
	DDC	ADH-8585-1	
		DDC-5240	
		DDCADC85	
		DDCADC87	
	MicroNet	MN5240	
		MNADC85	
		MNADC87	**3203**
MNADC85	AD	ADADC84	
		ADADC85	
		ADADC85S	
	Burr-Brown	ADC84	
		ADC85	
	Datel	ADC-84	
		ADC-85	
		ADC-87	
		ADC-HX12B	
		ADC-HZ12B	
		ADC-HZ12BGZ	
	HybridSys	ADC581	
		ADC581B	
		HSADC85	
		HSADC85C	
	DDC	ADH-8585-1	
		DDC-5240	
		DDCADC85	
		DDCADC87	
	MicroNet	MN5240	
		MNADC84	
		MNADC87	**3203**
MNADC87	AD	ADADC84	
		ADADC85	
		ADADC85S	
	Burr-Brown	ADC84	
		ADC85	
	Datel	ADC-84	
		ADC-85	
		ADC-87	
		ADC-HX12B	
		ADC-HZ12B	
		ADC-HZ12BGZ	
	HybridSys	ADC581	
		ADC581B	
		HSADC85	
		HSADC85C	
	DDC	ADH-8585-1	
		DDC-5240	
		DDCADC85	
		DDCADC87	
	MicroNet	MN5240	
		MNADC84	
		MNADC85	
MNDAC71	AD	ADDAC71	
	Burr-Brown	DAC700	
		DAC701	
		DAC702	
		DAC71	
		DAC72	
MNDAC87	AD	ADDAC87	
	Burr-Brown	DAC851	
		DAC87	
	Datel	DAC-687	
		DAC-87	
	Harris	HI5687	
	HybridSys	DAC335	
		HSDAC87	
MNDACHK	Datel	DAC-HK	

Micro Power Systems

Manufacturer Device	Replacement Source	Device	IC Master Page
6508	Fujitsu	8401	
	GouldAMI	6508	
	Harris	HM6508	
	Intersil	6508	
		IM6508-1	
	National	6508	
		74C929	
	NEC	443	
	RCA	6508	
	Toshiba	5508	
6518	GouldAMI	6518	
	Harris	HM6518	
	Motorola	6518	
	National	MM74C930	
DAC-01	MicroPwr	MP5520	
	PMI	**DAC-01**	**3637**
◆DAC-100	PMI	DAC-100	
MP027	Burr-Brown	OP27	
	LinearTech	OP27	
	PMI	OP27	
	Raytheon	OP-27	
MPOP11	Motorola	MC471CP	
	PMI	OP11	
MPOP37	Burr-Brown	OP37	
	LinearTech	OP37	
	PMI	OP37	
	Raytheon	OP-37	
MP1010	AMD	AM29510	
		AMD29510	
		AMD29L510	
	AD	ADSP1010	
		ADSP1010A	
	Cypress	CY7C510	
	IDT	**!DT7210**	**1084,1088**
	LogicDev	LMA1010	
	TI	74HCT9510	
		SN74HCT9510	
	TRW-LSI	TDC1010	
		TDC2010	
		TMC2010	
		TMC2110	
	Weitek	WTL1010	
		WTL2010	
		WTL2044	
		WTL2245	
MP108	AD	AD108	
	Fairchild	μA108	
	Harris	LM108	
	Intersil	**LM108**	**3600,3601**
	LinearTech	LM108	
	Motorola	**LM108**	**3615**
	National	LM108	
	PMI	PM108	
	SGS	M108	
	SiliconSys	**SSI108**	**3736**
	TI	LM108	
MP108A	AMD	LM108A	
	AD	AD108A	
	Fairchild	UA108A	
	Harris	LM108A	
	LinearTech	LM108A	
	Motorola	**LM108A**	**3615**
	PMI	PM108A	
MP1208	**Datel**	**DAC-612**	**3157,3162**
	National	DAC1208	
MP1209	National	DAC1209	
MP1210	National	DAC1210	
MP1230	National	DAC1230	
MP1231	National	DAC1231	
MP1232	National	DAC1232	
MP200	AD	ADG200	
	Harris	HI200	
	Intersil	**DG200**	**3196**
		IH200	
		IH5200	**3196**
	PMI	SW05	
	Siliconix	DG200A	
MP201	AD	ADG201	
	Harris	HI201	
	Intersil	DG201	
		IH201	
		IH5201	
	National	LF11201	
		LF13201	
	PMI	SW201	
	Siliconix	DG201A	
MP207	LinearTech	LT1002	
	MicroPwr	MPOP-207	
	PMI	OP-207	
MP208A	AMD	LM208A	
	AD	AD208A	
	Fairchild	UA208A	
	Motorola	**LM208A**	**3615**
	National	LM208A	
	PMI	PM208A	
		PM308A	
MP2208A	Intersil	LH2208A	
	National	LH2208A	
◆MP2325	AMD	AM92256	
	Fujitsu	MB83256	
	GI	R09256	
	GouldAMI	S23256	
		S38256	
	GTEMicro	G53256	
	Hitachi	HN613256	
	Mitsubishi	M5M23256	
	Mostek	MK38000	
	Motorola	MCM63256	
		MCM65256	
◆MP2325	NCR	NCR23256	
		NCR23257	
	NEC	UPD23256	
		UPD23256A	
		UPD23C256E	
	OKI	**MSM38256**	**4733**
	Panasonic	MN23256	
		MN23257	
	RCA	CDM52356	
		CDM53256	**1673,1678**
	S-MOS	**SMM2326**	**4178**
		SMM6325	**4178**
		SMM6326	**4178**
	Signetics	23256	
		23256A	
	SSS	SCM23C256	
	Supertex	CM2560	
	Toshiba	**TMM23256**	**4263**
	UMC	UM23256	
	VTI	23257	
		VT23256	
		VT23257	
MP2364C	AMD	9264	
	GI	R03-9364	
	GouldAMI	S68A364	
	Hitachi	HN48364	
	Intech	IM7364	
	Mitsubishi	M58334	
	Mostek	MK36000	
	Motorola	**MCM68364**	**4120**
		MCM68365	**4120**
		MCM68366	**4120**
	National	MM52164	
	NEC	UPD2364	
	Rockwell	R2364A	
	SGS	M2362	
		M36000	
	Signetics	2664	
		26S64	
	SSS	SCM23C64	
	SMC	ROM36000	
	Synertek	SY2364/A	
	TI	TMS4764	
	Toshiba	TMM2366	
◆MP2365	Hitachi	HN61364	
	S-MOS	**SMM2365**	**4178**
	Toshiba	**TC5364**	**4263**
MP255	National	LF255	
	PMI	PM255	
	ThomsonCSF	TDE0155	
MP302	Harris	HI302	
	Siliconix	DG302A	
MP303	Harris	HI303	
	Siliconix	DG303A	
MP308	AD	AD308	
	Burr-Brown	3500	
		3501	
	Fairchild	μA308	
	Intersil	AD308	
		LM308	**3600,3601**
	Motorola	**LM308**	**3615**
	National	LM308	
	Raytheon	LM308	
MP308A	AMD	LM308A	
	AD	AD308A	
	Fairchild	UA308A	
	Harris	LM308A	
	LinearTech	LM308A	
	Motorola	**LM308A**	**3615**
	National	LM308A	
MP3140	Datel	DAC-HA14	
	HybridSys	HS3140	
◆MP355	LinearTech	LF355	
	Motorola	**LF355**	**3616**
	National	LF355	
	PMI	PM355	
	ThomsonCSF	LF355	
◆MP356	LinearTech	LF356	
	Motorola	**LF356**	**3616**
	National	LF356	
	PMI	PM356	
	ThomsonCSF	LF356	
MP370	HybridSys	DAC370	
MP377-18	HybridSys	DAC377-18	
MP5010	AD	AD589	
	Ferranti	ZN423	
	Intersil	**ICL8069**	**3604**
	Maxim	ICL8069	
	National	LM113	
		LM313	
MP5010	TeledyneS	9491	
		T-SC9491	
MP5071	**Motorola**	**MC3357**	**3613**
MP5078	**Motorola**	**MC3420**	**3626**
		MC3520	**3626**
◆MP5507	AD	AD517	
		OP-07	
	Fairchild	UA714	
	Harris	HA-OP07	
		HA5130	
		HA5135	
	LinearTech	OP-07	
	Micra	MC0021	
	MicroPwr	MPOP07	
	NEC	UPC264	
	PMI	OP07	
	Raytheon	OP07	
	TI	OP07D	
MP5520	MicroPwr	DAC-01	
	PMI	**DAC-01**	**3637**
◆MP5524	Motorola	OP-24G	
MP5531	AD	AD581	
	Harris	HA1608	
	LinearTech	LTREF01	
		REF-01A	
	Maxim	REF01	
	MicroPwr	MPREF01	
	Motorola	MC1400AG10	
		MC1400AU10	
		MC1500AU10	
	PMI	REF-01AZ	
		REF01	
	Raytheon	**REF-01**	**3652**
		REF01	
	TeledyneS	TSC9495	
MP5532	LinearTech	LTREF02	
		REF-02E	
	Maxim	REF02	
	Motorola	MC1400AU5	
		MC1500AU5	
	PMI	REF-02EZ	
		REF02	
	Raytheon	REF02	
	TeledyneS	TSC9496	
MP5532C	PMI	REF02CP	
	TeledyneS	TSC9496	
◆MP561	AD	AD561	
MP562	AD	AD562	
	Datel	DAC562	
	Harris	HI562A	
	PMI	**PM562**	**3637**
◆MP571	AD	AD571	
	Fairchild	μA571	
	MCE	MCE-571	
MP574	AD	AD574	
	Burr-Brown	ADC574A	
	Datel	ADC574A	
	Harris	HI574A	
	HybridSys	HS574	
	MCE	MCE574	
	MicroNet	**MN574A**	**3203**
	TeledyneP	TP574A	
MP6116	AMD	AM9128	
		AM9218	
	Cypress	CY7C128	
	Fujitsu	MB8128	
		MB8416	
	Harris	HM6116	
		HM6516	
	IDT	IDT6116	
	Intel	2128	
	Mitsubishi	M58275	
		M5M116	
		M5M5116	
		M5M5117	
		M5M5118	
		MS8725	
	Motorola	MCM2016	
		MCM2016H	
		MCM2128	
		MCM6116	**4119**
		MCM61L16	**4119**
		MCM65116	
	National	MMC2116	
	NEC	μPD4016	
	OKI	MSM2128	
		MSM5128	**4732,4733**
	RCA	MWS6116A	
	SSS	883C21C16	
		BCM21C16	
		SCM21C16	

(Continued)

◆ Discontinued

The manufacturers report their devices can be used as direct replacements.
Performance details often differ, so compare the specifications considering your requirements.

Micro Power Systems (Cont'd)

Manufacturer Device	Replacement Source	Device	IC Master Page
MP6116	SSS	SCM6116	
	TI	TMS4016	
	ThomsonCSF	ET2128	
	Toshiba	**TC5516A**	**4263**
		TMM2015A	
		TMM2016	
		TMM2016A	**4263**
	Samsung	KM6816	
	UMC	UM2128	
	Universal	US574HC133	
◆MP6117	Fujitsu	MB8418	
	Hitachi	HM6117	
	NEC	μPD449	
	RCA	CDM6118	
	S-MOS	SRM2018	
	Toshiba	TC5518B	
	UMC	UM2167	
◆MP6118	Fujitsu	MB8417	
	RCA	CDM6117	
	S-MOS	SRM2017	
	Toshiba	**TC5516A**	**4263**
◆MP6504	GouldAMI	6504	
	Harris	HM6504	
	Hitachi	4315	
		6147	
	Mitsubishi	58981	
	Motorola	6504	
	National	NMC6504	
	OKI	5104	
	RCA	CDM5104	
	Rockwell	R6504	
	Synertek	SY6504	
	Toshiba	TC5504	
◆MP6514	Harris	HM6514	
	Hitachi	6148	
		HM4334	
	Mitsubishi	58981	
	Motorola	6514	
	NEC	444	
	OKI	5114	
	RCA	MWS5514	
	Rockwell	R6514	
	Synertek	SY6514	
	Toshiba	TC5514	
MP7501	AD	AD7501	
	Burr-Brown	**MPC8S**	**3149**
	Datel	MUX808	
		MX-808	**3163**
	Harris	HI508	
	Intersil	IH6108	
	MicroPwr	MP7508	
	National	LF11508	
		LF13508	
	PMI	DMX-88	
		MUX-08	
		MUX-88	
	Siliconix	DG508A	
	TeledyneP	4554	
MP7502	AD	AD7502	
	Datel	MVD409	
	Harris	HI1828A	
	National	CD4052	
	Solitron	CM4052	
	SSS	SCL4052	
	Toshiba	TC4052	
MP7503	AD	AD7503	
	Datel	**MV-808**	**3163**
	Harris	HI1818A	
	HybridSys	MUX201	
MP7506	**Burr-Brown**	**MPC16S**	**3149**
	Datel	**MV-1606**	**3163**
		MX-1606	**3163**
	Harris	HI506	
	Intersil	IH6116	
	PMI	MUX-16	
	Siliconix	DG506A	
MP7507	AD	AD7507	
	Burr-Brown	**MPC8D**	**3149**
	Datel	**MVD-807**	**3163**
		MXD-807	**3163**
	Harris	HI507	
	Intersil	IH6216	
	PMI	MUX-28	
	Siliconix	DG507A	
	TeledyneP	4551	
MP7508	AD	AD7501	
	Burr-Brown	**MPC8S**	**3149**
	Datel	MUX808	
		MX-808	**3163**
	Harris	HI508	
	Intersil	IH6108	
	MicroPwr	MP7501	
	National	LF11508	
		LF13508	
	PMI	DMX-88	
		MUX-08	
		MUX-88	
	Siliconix	DG508A	
	TeledyneP	4554	
MP7509	**Burr-Brown**	**MPC4D**	**3149**
	Harris	HI509	
	Intersil	IH6208	
	MicroPwr	MP7509DI	
	National	LF11509	
		LF13509	
	PMI	MUX-24	
	Siliconix	DG509A	
	TeledyneP	4553	
MP7509DI	**Burr-Brown**	**MPC4D**	**3149**
	Harris	HI509	
	Intersil	IH6208	
	MicroPwr	MP7509	
	National	LF11509	
		LF13509	
	PMI	MUX-24	
	Siliconix	DG509A	
	TeledyneP	4553	
MP7510	AD	AD7510	
	PMI	SW7510	
MP7511	AD	AD7511	
	PMI	SW7511	
MP7512	AD	AD7512	
◆MP7513	AD	ADG200	
	Harris	HI200	
	Intersil	**DG200**	**3196**
		IH200	
		IH5200	**3196**
	MicroPwr	MP200	
	PMI	SW05	
	Siliconix	DG200A	
◆MP7516	Fairchild	F4016	
		F4066	
	Motorola	MC14016	
		MC14066	
	National	CD4016	
		CD4066	
	RCA	CD4016	
		CD4066	
	Sanyo	LC4016	
		LC4066	
	SGS	HCC/HCF4016	
		HCC/HCF4066	
	Signetics	HEF4016	
		HEF4066	
	Solitron	CM4016	
		CM4066	
		HCF4016	
	SSS	SCL4016	
		SCL4066	
	Toshiba	TC4016	
		TC4066	
MP7520	AD	AD7520	
	Datel	DAC-HA10B	
	Intersil	AD7520	
	National	AD7520	
		DAC1020	
		DAC1021	
		DAC1022	
MP7521	AD	AD7521	
	Datel	DAC-HA12B	
	HybridSys	DAC331-12	
	Intersil	AD7521	
	National	AD7521	
		DAC1220	
		DAC1221	
		DAC1222	
MP7522	AD	AD7522	
MP7523	AD	AD7523	
	Datel	**DAC-7523**	**3162**
	Intersil	AD7523	
MP7524	AD	AD7524	
MP7528	AD	AD7528	
MP7530	AD	AD7530	
MP7531	AD	AD7531	
MP7533	AD	AD7533	
	Datel	**DAC-7533**	**3162**
	Intersil	AD7533	
	National	AD7533	
MP7541	AD	AD7541	
	Datel	**DAC-7541**	**3162**
	Harris	HI7541	
	HybridSys	DAC331	
	HybridSys	HS7541	
	Intersil	AD7541	
		ICL7541	
	MicroPwr	MP7621	
	National	AD7521	
	Siliconix	SI7541	
	TeledyneP	TP7541	
MP7542	AD	AD7542	
MP7543	AD	AD7543	
MP7545	AD	AD7545	
MP7550	AD	AD7550	
MP7570	AD	AD7570	
MP7574	AD	AD7574	
MP7581	AD	AD7581	
MP7621	AD	AD7541	
	Datel	**DAC-7541**	**3162**
	Harris	HI7541	
	HybridSys	DAC331	
		HS7541	
	Intersil	AD7541	
		ICL7541	
	MicroPwr	MP7541	
	National	AD7521	
	Siliconix	SI7541	
	TeledyneP	TP7541	
MP7622	AD	AD7622	
	HybridSys	HS3120	
	Siliconix	MP7622	
◆MP7623	AD	AD7546	
MP7682	Datel	ADC-883	
	RCA	**CA3300**	**3216,3218**
MP9331	HybridSys	DAC9331	
MP9377	HybridSys	DAC9377	
MP9377-16	HybridSys	DAC9377-16	
MPINA101	**Burr-Brown**	**INA101**	**3150**
MPOP-12	LinearTech	LT1012	
	PMI	**OP-12**	**3636**
	TI	OP-12	
MPOP-207	LinearTech	LT1002	
	MicroPwr	MP207	
	PMI	OP-207	
MPOP-227	LinearTech	OP-227	
	PMI	OP-227	
MPOP02	**PMI**	**OP-02**	**3636**
MPOP04	AMD	747	
	Fairchild	μA747	
	Hitachi	HA17747	
	Motorola	**MC1747**	**3617**
	National	LM747	
	NEC	μPC251	
	PMI	**OP-04**	**3636**
		PM747	
	Raytheon	RC747	
		RM747	
	RCA	**CA747**	**3672**
	Signetics	**μA747**	**3721**
	TeledyneS	747	
	TI	μA747	
MPOP05	AD	AD510	
	LinearTech	OP05	
	PMI	OP05	
MPOP07	AD	AD517	
		OP-07	
	Fairchild	UA714	
	Harris	HA-OP07	
		HA5130	
		HA5135	
	LinearTech	OP-07	
	Micra	MC0021	
	NEC	UPC264	
	PMI	OP07	
	Raytheon	OP07	
	TI	OP07D	
MPOP08	AD	AD517	
	LinearTech	LT1008	
	PMI	**OP-08**	**3636**
MPOP09	Fairchild	UA4136	
	PMI	OP09	
	RCA	RC4136	
MPOP10	LinearTech	LT1002	
	PMI	OP-10	
MPOP14	Fairchild	UA1458HC	
	Harris	CM1458	
		HA5102	
	Motorola	**MC1458**	**3617**
	National	LF412	
	NEC	MPC251	
	PMI	OP14	
	RCA	**CA1458**	**3672**
	SGS	MC1458	
	Signetics	**SA1458**	**3729**
	ThomsonCSF	μA1458	
MPOP14	**Samsung**	**MC1458**	**3679**
		MC4558	**3679**
◆MPOP24	Motorola	OP-24G	
MPREF-02	PMI	REF02	
MPREF-05	PMI	REF-05	
MPREF-10	**Burr-Brown**	**REF10**	**3151**
	LinearTech	LT1021	
	PMI	REF-10	
MPREF01	AD	AD581	
	Harris	HA1608	
	LinearTech	LTREF01	
		REF-01A	
	Maxim	REF01	
	MicroPwr	MP5531	
	Motorola	MC1400AG10	
		MC1400AU10	
		MC1500AU10	
	PMI	REF-01AZ	
		REF01	
	Raytheon	**REF-01**	**3652**
		REF01	
	TeledyneS	TSC9495	
MPS531C	PMI	REF01CP	
	TeledyneS	TSC9495	
MPT-01A	PMI	MAT-01	
MPT-01GH	PMI	MAT-01GH	
MPT-02A	National	LM194	
	PMI	MAT-02	
MPT-02BH	PMI	MPT-02BH	
MPT-02EH	PMI	MAT-02EH	
MPT-02FH	PMI	MAT-02FH	
MPVFC32	AD	ADVFC32	
	Burr-Brown	**VFC32**	**3148,3153**
	MCE	MCE-VFC32	
OP11	LinearTech	LT1014	
	National	LM148	
	PMI	OP11	
	Raytheon	LM148	
		RM4156	
		RM4158	
	TI	**LM148**	**719**

Microcircuits Technology

Manufacturer Device	Replacement Source	Device	IC Master Page
74HCT137	CTI	74HCT137	
	MicroTech	74HCTR137	
	SGS	M74HCT137	
	Supertex	74HCT137	
	TI	SN74HCT137	
	Toshiba	**TC74HCT137**	**1363**
	Universal	US74HCT137	
74HCTR137	CTI	74HCT137	
	MicroTech	74HCT137	
	SGS	M74HCT137	
	Supertex	74HCT137	
	TI	SN74HCT137	
	Toshiba	**TC74HCT137**	**1363**
	Universal	US74HCT137	
74HCTR154	TI	SN74HCT154	
74HCTR240	CTI	74HCT240	
	Hitachi	HD74HCT240	
	Micrel	MIC74HCT240	
	Mitel	MD74HCT240	
	Motorola	MC74HCT240	
	National	MM74HCT240	
	Nitron	NC74HCT240	
	Plessey	MV74HCT240	
	RCA	**CD74HCT240**	**1149**
	SPI	SP74HCT240	
	SGS	M74HCT240	
	Signetics	**74HCT240**	**1157**
	SSS	SS74HCT240	
	Supertex	SI74HCT240	
	TI	SN74HCT240	
	Toshiba	**TC74HCT240**	**1363**
	Universal	US74HCT240	
	Zytrex	ZX74HCT240-2	
74HCTR241	CTI	74HCT241	
	Hitachi	HD74HCT241	
	Micrel	MIC74HCT241	
	Mitel	MD74HCT241	
	Motorola	MC74HCT241	
	National	MM74HCT241	
	Nitron	NC74HCT241	
	Plessey	MV74HCT241	
	RCA	**CD74HCT241**	**1149**
	SPI	SP74HCT241	
	SGS	M74HCT241	
	Signetics	**74HCT241**	**1157**
	SSS	SS74HCT241	
	Supertex	SI74HCT241	
	TI	SN74HCT241	

(Continued)

◆ Discontinued

Bold face device numbers indicate manufacturers data is provided in the IC Master on the pages noted.

Microcircuits Technology (Cont'd)

Manufacturer Device	Replacement Source	Device	IC Master Page
74HCTR241	**Toshiba**	**TC74HCT241**	**1363**
	Universal	US74HCT241	
	Zytrex	ZX74HCT241-2	
74HCTR244	CTI	74HCT244	
	Hitachi	HD74HCT244	
	Micrel	MIC74HCT244	
	Mitel	MD74HCT244	
	Motorola	MC74HCT244	
	National	MM74HCT244	
	Nitron	NC74HCT244	
	Plessey	MV74HCT244	
	RCA	**CD74HCT244**	**1149**
	SPI	SP74HCT244	
	SGS	M74HCT244	
	Signetics	**74HCT244**	**1158**
	SSS	SS74HCT244	
	Supertex	SI74HCT244	
	TI	SN74HCT244	
	Toshiba	**TC74HCT244**	**1363**
	Universal	US74HCT244	
	Zytrex	ZX74HCT244-2	
74HCTR245	CTI	74HCT245	
	GTEMicro	G74SC245	
	Hitachi	HD74HCT245	
	Micrel	MIC74HCT245	
	Mitel	MD74HCT245	
	Motorola	MC74HCT245	
	National	MM74HCT245	
	Plessey	MV74HCT245	
		MV74SC245	
	RCA	**CD74HCT245**	**1149**
	SPI	SP74HCT245	
	SGS	M74HCT245	
	Signetics	**74HCT245**	**1158**
	SSS	SS74HCT245	
	TI	SN74HCT245	
	Toshiba	**TC74HCT245**	**1363**
	Universal	US74HCT245	
74HCTR280	TI	SN74HCT280	
74HCTR373	CTI	74HCT373	
	GTEMicro	G74SC373	
	Hitachi	HD74HCT373	
	Micrel	MIC74HCT373	
	Mitel	MD74HCT373	
	Motorola	MC74HCT373	
	National	MM74HCT373	
	Nitron	NC74HCT373	
	Plessey	MV74HCT373	
		MV74SC373	
	RCA	**CD74HCT373**	**1150**
	SPI	SP74HCT373	
	SGS	M74HCT373	
	Signetics	**74HCT373**	**1158**
	SSS	SS74HCT373	
	Supertex	SI74HCT373	
	TI	SN74HCT373	
	Toshiba	**TC74HCT373**	**1363**
	Universal	US74HCT373	
	Zytrex	ZX74HCT373-2	
74HCTR374	CTI	74HCT374	
	GTEMicro	G74SC374	
	Hitachi	HD74HCT374	
	Micrel	MIC74HCT374	
	Mitel	MD74HCT374	
	Motorola	MC74HCT374	
	National	MM74HCT374	
	Nitron	NC74HCT374	
	Plessey	MV74HCT374	
		MV74SC374	
	RCA	CD74HCT374	
	SPI	SP74HCT374	
	SGS	M74HCT374	
	Signetics	**74HCT374**	**1158**
	SSS	SS74HCT374	
	Supertex	SI74HCT374	
	TI	SN74HCT374	
	Toshiba	**TC74HCT374**	**1363**
	Universal	US74HCT374	
	Zytrex	ZX74HCT374-2	
74HCTR533	CTI	74HCT533	
	Hitachi	HD74HCT533	
	Micrel	MIC74HCT533	
	Motorola	MC74HCT533	
	Plessey	MV74HCT533	
	RCA	**CD74HCT533**	**1150**
	Signetics	**74HCT533**	**1159**
	SSS	SS74HCT533	
	TI	SN74HCT533	
74HCTR533	Universal	US74HCT533	
	Zytrex	ZX74HCT533	
74HCTR534	CTI	74HCT534	
	Hitachi	HD74HCT534	
	Micrel	MIC74HCT534	
	Motorola	MC74HCT534	
	Plessey	MV74HCT534	
	RCA	CD74HCT534	
	Signetics	**74HCT534**	**1159**
	SSS	SS74HCT534	
	TI	SN74HCT534	
	Universal	US74HCT534	
	Zytrex	ZX74HCT534-2	
74HCTR540	CTI	74HCT540	
	Hitachi	HD74HCT540	
	Micrel	MIC74HCT540	
	Mitel	MD74HCT540	
	Motorola	MC74HCT540	
	Plessey	MV74HCT540	
	RCA	**CD74HCT540**	**1149**
	SPI	SP74HCT540	
	SGS	M74HCT540	
	Signetics	**74HCT540**	**1159**
	SSS	SS74HCT540	
	TI	SN74HCT540	
	Toshiba	**TC74HCT540**	**1363**
	Universal	US74HCT540	
	Zytrex	ZX74HCT540-2	
74HCTR541	CTI	74HCT541	
	Hitachi	HD74HCT541	
	Micrel	MIC74HCT541	
	Mitel	MD74HCT541	
	Motorola	MC74HCT541	
	Plessey	MV74HCT541	
	RCA	**CD74HCT541**	**1149**
	SPI	SP74HCT541	
	SGS	M74HCT541	
	Signetics	**74HCT541**	**1159**
	SSS	SS74HCT541	
	TI	SN74HCT541	
	Toshiba	**TC74HCT541**	**1363**
	Universal	US74HCT541	
	Zytrex	ZX74HCT541-2	
74HCTR563	CTI	74HCT563	
	Hitachi	HD74HCT563	
	Micrel	MIC74HCT563	
	Motorola	MC74HCT563	
	Plessey	MV74HCT563	
	RCA	**CD74HCT563**	**1150**
	SGS	M74HCT563	
	Signetics	**74HCT563**	**1159**
	SSS	SS74HCT563	
	TI	SN74HCT563	
	Toshiba	**TC74HCT563**	**1363**
	Universal	US74HCT563	
74HCTR564	CTI	74HCT564	
	Hitachi	HD74HCT564	
	Micrel	MIC74HCT564	
	Motorola	MC74HCT564	
	Plessey	MV74HCT564	
		MV74HCT573	
	RCA	CD74HCT564	
	SGS	M74HCT564	
	Signetics	**74HCT564**	**1159**
	SSS	SS74HCT564	
	TI	SN74HCT564	
	Toshiba	**TC74HCT564**	**1363**
	Universal	US74HCT564	
74HCTR573	CTI	74HCT573	
	Hitachi	HD74HCT573	
	Micrel	MIC74HCT573	
	Mitel	MD74HCT573	
	Motorola	MC74HCT573	
	RCA	**CD74HCT573**	**1150**
	SPI	SP74HCT573	
	SGS	M74HCT573	
	Signetics	**74HCT573**	**1159**
	SSS	SS74HCT573	
	TI	SN74HCT573	
	Toshiba	TC74HCT573	
	Universal	US74HCT573	
74HCTR574	CTI	74HCT574	
	Hitachi	HD74HCT574	
	Mitel	MD74HCT574	
	Motorola	MC74HCT574	
	Plessey	MV74HCT574	
	RCA	CD74HCT574	
	SPI	SP74HCT574	
	SGS	M74HCT574	
	Signetics	**74HCT574**	**1159**
	SSS	SS74HCT574	
	TI	SN74HCT574	
74HCTR574	**Toshiba**	**TC74HCT574**	**1363**
	Universal	US74HCT574	
		US75HCT574	
74HCTR620	TI	SN74HCT620	
74HCTR623	TI	SN74HCT623	
74HCTR640	Hitachi	HD74HCT640	
	Motorola	MC74HCT640	
	Nitron	NC74HCT640	
	RCA	**CD74HCT640**	**1149**
	SGS	M74HCT640	
	Signetics	**74HCT640**	**1159**
	SSS	SS74HCT640	
	TI	SN74HCT640	
	Toshiba	**TC74HCT640**	**1363**
	Universal	US74HCT640	
	Zytrex	ZX74HCT640-2	
74HCTR643	Hitachi	HD74HCT643	
	Motorola	MC74HCT643	
	RCA	**CD74HCT643**	**1149**
	SGS	M74HCT643	
	Signetics	**74HCT643**	**1159**
	TI	SN74HCT643	
	Toshiba	**TC74HCT643**	**1363**
	Universal	US74HCT643	
	Zytrex	ZX74HCT643-2	

Micron Technology

Manufacturer Device	Replacement Source	Device	IC Master Page
MT1256	AMD	MCM6256	
	AT&T	WCM41256	
	Fujitsu	MB81256	
	Hitachi	HM50256	
		HM50257	
	Mitsubishi	M5M4256	
		MSM4257	
	Motorola	MCM6256	
		MCM6257	
	NEC	MPD41257	
		μPD41256	
	OKI	M5M37256	
		MSM37256	
		MSM41256	
	Panasonic	MM41256	
	TI	TMS4257	
	Toshiba	TMM41256	
	Samsung	KM1256	
MT4264	Fairchild	F64K	
	Fujitsu	MB8264A	
		MB8266A	
	Hitachi	HM4864	
	Inmos	IMS2600	
	Motorola	MCM4164B	
		MCM6665B	
	National	NMC4164	
	NEC	μPD4164	
	OKI	MSM3764	
	ThomsonCSF	ET4164	
	Toshiba	TMM4164	
	Samsung	KM4164	

Micropac Industries

Manufacturer Device	Replacement Source	Device	IC Master Page
M78H05	Fairchild	SH0323	
		SH323	
		μA323	
		μA78H05	
	IPS	IP123-5	
		IP323	**3599**
	Lambda	LAS1405	
		LAS1905	
	LinearTech	LM323	
	Motorola	**LM323**	**3622**
		MC78T05C	**3622**
	SiliconG	SG323	
	ThomsonCSF	LM323	
M78H12	Fairchild	μA78H12A	
	Lambda	LAS1412	
		LAS1912	
M78P05	Fairchild	μA78P05	
	Lambda	LAS3905	
	Micropac	MLAS3905	
MASG600	Nitron	MA600	
MLAS3905	Fairchild	μA78P05	
	Lambda	LAS3905	
	Micropac	M78P05	
MLAS3912	Lambda	LAS3912	
MLAS3915	Lambda	LAS3915	
MLM138	**IPS**	**IP138**	**3599**
	LinearTech	LM138	
	National	LM138	
MLM196	National	LM196	
MLM338	**IPS**	**IP338**	**3599**
	LinearTech	LM338	
	National	LM338	
MLM396	National	LM396	

Mitel Semiconductor

Manufacturer Device	Replacement Source	Device	IC Master Page
MD4055	RCA	CD4055	
	SGS	HCC/HCF4055	
	Toshiba	TC4055	
MD4511	Fairchild	F4511	
	MMI	4511	
	Motorola	MC14511	
	National	CD4511	
	NEC	μPD4511	
	RCA	CD4511	
	SGS	HCC/HCF4511	
	Signetics	HEF4511	
	Solitron	CM4511	
	SSS	SCL4511	
	Toshiba	TC4511	
MD54HC240	**Motorola**	**MC54HC240**	**1124**
	National	MM54HC240	
	RCA	**CD54HC240**	**1149**
	Signetics	54HC240	
	SSS	SS54HC240	
	Supertex	SI54HC240	
	TI	**SN54HC240**	**714**
MD54HC241	**Motorola**	**MC54HC241**	**1124**
	National	MM54HC241	
	RCA	**CD54HC241**	**1149**
	Signetics	54HC241	
	SSS	SS54HC241	
	Supertex	SI54HC241	
	TI	**SN54HC241**	**714**
MD54HC244	**Motorola**	**MC54HC244**	**1124**
	National	MM54HC244	
	RCA	**CD54HC244**	**1149**
	Signetics	54HC244	
	SSS	SS54HC244	
	Supertex	SI54HC244	
	Telmos	TMD54HC244	
	TI	**SN54HC244**	**714**
MD54HC373	**Motorola**	**MC54HC373**	**1126**
	National	MM54HC373	
	RCA	**CD54HC373**	**1150**
	Signetics	54HC373	
	SSS	SS54HC373	
	Supertex	SI54HC373	
	TI	**SN54HC373**	**714**
MD54HC374	**Motorola**	**MC54HC374**	**1126**
	National	MM54HC374	
	RCA	**CD54HC374**	**1149**
	Signetics	54HC374	
	SSS	SS54HC374	
	Supertex	SI54HC374	
	TI	**SN54HC374**	**714**
MD54HCT138	CTI	54HCT138	
	IDT	IDT54HCT138	
	Motorola	MC54HCT138	
	SPI	SP54HCT138	
	Signetics	54HCT138	
	SSS	SS54HCT138	
	TI	**SN54HCT138**	**714**
MD54HCT139	CTI	54HCT139	
	IDT	IDT54HCT139	
	RCA	**CD54HCT139**	**1150**
	SPI	SP54HCT139	
	Signetics	54HCT139	
	SSS	SS54HCT139	
MD54HCT240	CTI	54HCT240	
	Motorola	MC54HCT240	
	National	MM54HCT240	
	RCA	**CD54HCT240**	**1149**
	SPI	SP54HCT240	
	Supertex	SI54HCT240	
	TI	**SN54HCT240**	**714**
MD54HCT241	CTI	54HCT241	
	Motorola	MC54HCT241	
	National	MM54HCT241	
	RCA	**CD54HCT241**	**1149**
	SPI	SP54HCT241	
	Signetics	54HCT241	
	SSS	SS54HCT241	
	Supertex	SI54HCT241	
	TI	**SN54HCT241**	**714**
MD54HCT244	CTI	54HCT244	
	Motorola	MC54HCT244	
	National	MM54HCT244	
	RCA	**CD54HCT244**	**1149**
	SPI	SP54HCT244	
	Signetics	54HCT244	

(Continued)

◆ Discontinued

The manufacturers report their devices can be used as direct replacements.
Performance details often differ, so compare the specifications considering your requirements.

Mitel Semiconductor (Cont'd)

Manufacturer Device	Replacement Source	Device	IC Master Page
MD54HCT244	SSS	SS54HCT244	
	Supertex	SI54HCT244	
	TI	**SN54HCT244**	714
MD54HCT245	CTI	54HCT245	
	Motorola	MC54HCT245	
	RCA	**CD54HCT245**	1149
	SPI	SP54HCT245	
	Signetics	54HCT245	
	SSS	SS54HCT245	
	TI	**SN54HCT245**	714
MD54HCT343	CTI	54HCT373	
	Mitel	MD54HCT373	
	Motorola	MC54HCT373	
	National	MM54HCT373	
	RCA	**CD54HCT373**	1150
	SPI	SP54HCT373	
	Signetics	54HCT373	
	SSS	SS54HCT373	
	Supertex	SI54HCT373	
	TI	**SN54HCT373**	714
MD54HCT373	CTI	54HCT373	
	Mitel	MD54HCT343	
	Motorola	MC54HCT373	
	National	MM54HCT373	
	RCA	**CD54HCT373**	1150
	SPI	SP54HCT373	
	Signetics	54HCT373	
	SSS	SS54HCT373	
	Supertex	SI54HCT373	
	TI	**SN54HCT373**	714
MD54HCT374	CTI	54HCT374	
	Motorola	MC54HCT374	
	National	MM54HCT374	
	RCA	**CD54HCT374**	1149
	SPI	SP54HCT374	
	SSS	SS54HCT374	
	Supertex	SI54HCT374	
	TI	**SN54HCT374**	714
MD54HCT540	CTI	54HCT540	
	Motorola	MC54HCT540	
	RCA	**CD54HCT540**	1149
	SPI	SP54HCT540	
	Signetics	54HCT540	
	SSS	SS54HCT540	
	TI	**SN54HCT540**	714
MD54HCT541	CTI	54HCT541	
	Motorola	MC54HCT541	
	RCA	**CD54HCT541**	1149
	SPI	SP54HCT541	
	Signetics	54HCT541	
	SSS	SS54HCT541	
	TI	**SN54HCT541**	714
MD54HCT573	CTI	54HCT573	
	RCA	**CD54HCT573**	1150
	SPI	SP54HCT573	
	Signetics	54HCT573	
	SSS	SS54HCT573	
MD54HCT574	CTI	54HCT574	
	RCA	**CD54HCT574**	1149
	SPI	SP54HCT574	
	Signetics	54HCT574	
	SSS	SS54HCT574	
MD74HC240	Hitachi	HD74HC240	
	Motorola	**MC74HC240**	1124
	National	MM74HC240	
	Nitron	NC74HC240	
	RCA	**CD74HC240**	1149
	SPI	SP74HC240	
	SGS	M74HC240	
	Signetics	**74HC240**	1157
	SSS	SS74HC240	
	Supertex	SI74HC240	
	TI	SN74HC240	
	Toshiba	**TC40H240**	1363
	Universal	US74HC240	
	Zytrex	ZX74HC240	
MD74HC241	Hitachi	HD74HC241	
	Motorola	**MC74HC241**	1124
	National	MM74HC241	
	Nitron	NC74HC241	
	RCA	**CD74HC241**	1149
	SPI	SP74HC241	
	SGS	M74HC241	
	Signetics	**74HC241**	1157
	SSS	SS74HC241	
	Supertex	SI74HC241	
	TI	SN74HC241	
	Universal	US74HC240	
	Zytrex	ZX74HC241	
MD74HC244	Hitachi	HD74HC244	
	Motorola	**MC74HC244**	1124
	National	MM74HC244	
	Nitron	NC74HC244	
	RCA	**CD74HC244**	1149
	SPI	SP74HC244	
	SGS	M74HC244	
	Signetics	**74HC244**	1158
	SSS	SS74HC244	
	Supertex	SI74HC244	
	TI	SN74HC244	
	Universal	US74HC244	
	Zytrex	ZX74HC244	
MD74HC373	Hitachi	HD74HC373	
	Motorola	**MC74HC373**	1126
	National	MM74HC373	
	Nitron	NC74HC373	
	RCA	**CD74HC373**	1150
	SPI	SP74HC373	
	SGS	M74HC373	
	Signetics	**74HC373**	1158
	SSS	SS74HC373	
	Supertex	SI74HC373	
	TI	SN74HC373	
	Universal	US74HC373	
	Zytrex	ZX74HC373	
MD74HC374	Hitachi	HD74HC374	
	Motorola	**MC74HC374**	1126
	National	MM74HC374	
	Nitron	NC74HC374	
	RCA	**CD74HC374**	1149
	SPI	SP74HC374	
	SGS	M74HC374	
	Signetics	**74HC374**	1158
	SSS	SS74HC374	
	TI	SN74HC374	
	Universal	US74HC374	
	Zytrex	ZX74HC374	
MD74HCT138	CTI	74HCT138	
	IDT	IDT74HCT138	
	Motorola	MC74HCT138	
	Nitron	NC74HCT138	
	Plessey	MV74HCT138	
	RCA	**CD74HCT138**	1150
	SPI	SP74HCT138	
	SGS	M74HCT138	
	Signetics	**74HCT138**	1157
	SSS	SS74HCT138	
	TI	SN74HCT138	
	Toshiba	**TC74HCT138**	1363
	Zytrex	ZX74HCT138-2	
MD74HCT139	IDT	IDT74HCT139	
	Nitron	NC74HCT139	
	Plessey	MV74HCT139	
	SPI	SP74HCT139	
	Signetics	**74HCT139**	1157
	Universal	US74HCT139	
	Zytrex	ZX74HCT139-2	
MD74HCT240	CTI	74HCT240	
	Hitachi	HD74HCT240	
	Micrel	MIC74HCT240	
	MicroTech	74HCTR240	
	Motorola	MC74HCT240	
	National	MM74HCT240	
	Nitron	NC74HCT240	
	Plessey	MV74HCT240	
	RCA	**CD74HCT240**	1149
	SPI	SP74HCT240	
	SGS	M74HCT240	
	Signetics	**74HCT240**	1157
	SSS	SS74HCT240	
	Supertex	SI74HCT240	
	TI	SN74HCT240	
	Toshiba	**TC74HCT240**	1363
	Universal	US74HCT240	
	Zytrex	ZX74HCT240-2	
MD74HCT241	CTI	74HCT241	
	Hitachi	HD74HCT241	
	Micrel	MIC74HCT241	
	MicroTech	74HCTR241	
	Motorola	MC74HCT241	
	National	MM74HCT241	
	Nitron	NC74HCT241	
	Plessey	MV74HCT241	
	RCA	**CD74HCT241**	1149
	SPI	SP74HCT241	
	SGS	M74HCT241	
	Signetics	**74HCT241**	1157
	SSS	SS74HCT241	
	Supertex	SI74HCT241	
	TI	SN74HCT241	
	Toshiba	**TC74HCT241**	1363
		(Continued)	
MD74HCT241	Universal	US74HCT241	
	Zytrex	ZX74HCT241-2	
MD74HCT244	CTI	74HCT244	
	Hitachi	HD74HCT244	
	Micrel	MIC74HCT244	
	MicroTech	74HCTR244	
	Motorola	MC74HCT244	
	National	MM74HCT244	
	Nitron	NC74HCT244	
	Plessey	MV74HCT244	
	RCA	**CD74HCT244**	1149
	SPI	SP74HCT244	
	SGS	M74HCT244	
	Signetics	**74HCT244**	1158
	SSS	SS74HCT244	
	Supertex	SI74HCT244	
	TI	SN74HCT244	
	Toshiba	**TC74HCT244**	1363
	Universal	US74HCT244	
	Zytrex	ZX74HCT244-2	
MD74HCT245	CTI	74HCT245	
	GTEMicro	G74SC245	
	Hitachi	HD74HCT245	
	Micrel	MIC74HCT245	
	MicroTech	74HCTR245	
	Motorola	MC74HCT245	
	National	MM74HCT245	
	Plessey	MV74HCT245	
		MV74SC245	
	RCA	**CD74HCT245**	1149
	SPI	SP74HCT245	
	SGS	M74HCT245	
	Signetics	**74HCT245**	1158
	SSS	SS74HCT245	
	TI	SN74HCT245	
	Toshiba	**TC74HCT245**	1363
	Universal	US74HCT245	
MD74HCT373	CTI	74HCT373	
	GTEMicro	G74SC373	
	Hitachi	HD74HCT373	
	Micrel	MIC74HCT373	
	MicroTech	74HCTR373	
	Motorola	MC74HCT373	
	National	MM74HCT373	
	Nitron	NC74HCT373	
	Plessey	MV74HCT373	
		MV74SC373	
	RCA	**CD74HCT373**	1150
	SPI	SP74HCT373	
	SGS	M74HCT373	
	Signetics	**74HCT373**	1158
	SSS	SS74HCT373	
	Supertex	SI74HCT373	
	TI	SN74HCT373	
	Toshiba	**TC74HCT373**	1363
	Universal	US74HCT373	
	Zytrex	ZX74HCT373-2	
MD74HCT374	CTI	74HCT374	
	GTEMicro	G74SC374	
	Hitachi	HD74HCT374	
	Micrel	MIC74HCT374	
	MicroTech	74HCTR374	
	Motorola	MC74HCT374	
	National	MM74HCT374	
	Nitron	NC74HCT374	
	Plessey	MV74HCT374	
		MV74SC374	
	RCA	CD74HCT374	
	SPI	SP74HCT374	
	SGS	M74HCT374	
	Signetics	**74HCT374**	1158
	SSS	SS74HCT374	
	Supertex	SI74HCT374	
	TI	SN74HCT374	
	Toshiba	**TC74HCT374**	1363
	Universal	US74HCT374	
	Zytrex	ZX74HCT374-2	
MD74HCT540	CTI	74HCT540	
	Hitachi	HD74HCT540	
	Micrel	MIC74HCT540	
	MicroTech	74HCTR540	
	Motorola	MC74HCT540	
	Plessey	MV74HCT540	
	RCA	**CD74HCT540**	1149
	SPI	SP74HCT540	
	SGS	M74HCT540	
	Signetics	**74HCT540**	1159
	SSS	SS74HCT540	
	TI	SN74HCT540	
	Toshiba	**TC74HCT540**	1363
	Universal	US74HCT540	
	Zytrex	ZX74HCT540-2	
MD74HCT541	CTI	74HCT541	
	Hitachi	HD74HCT541	
	Micrel	MIC74HCT541	
	MicroTech	74HCTR541	
	Motorola	MC74HCT541	
	Plessey	MV74HCT541	
	RCA	**CD74HCT541**	1149
	SPI	SP74HCT541	
	SGS	M74HCT541	
	Signetics	**74HCT541**	1159
	SSS	SS74HCT541	
	TI	SN74HCT541	
	Toshiba	**TC74HCT541**	1363
	Universal	US74HCT541	
	Zytrex	ZX74HCT541-2	
MD74HCT573	CTI	74HCT573	
	Hitachi	HD74HCT573	
	Micrel	MIC74HCT573	
	MicroTech	74HCTR573	
	Motorola	MC74HCT573	
	RCA	**CD74HCT573**	1150
	SPI	SP74HCT573	
	SGS	M74HCT573	
	Signetics	**74HCT573**	1159
	SSS	SS74HCT573	
	TI	SN74HCT573	
	Toshiba	TC74HCT573	
	Universal	US74HCT573	
MD74HCT574	CTI	74HCT574	
	Hitachi	HD74HCT574	
	MicroTech	74HCTR574	
	Motorola	MC74HCT574	
	Plessey	MV74HCT574	
	RCA	CD74HCT574	
	SPI	SP74HCT574	
	SGS	M74HCT574	
	Signetics	**74HCT574**	1159
	SSS	SS74HCT574	
	TI	SN74HCT574	
	Toshiba	**TC74HCT574**	1363
	Universal	US74HCT574	
		US75HCT574	
ML8204	Cherry	CS8204	
	Plessey	MV8204	
	Samsung	ML8204	
ML8205	Cherry	CS8205	
	Exar	XRT8205	
	Samsung	ML8205	
◆MT3506	**GouldAMI**	**S3506**	3590
	Plessey	MV3506	
◆MT3507	**GouldAMI**	**S3507**	3590
	Plessey	MV3507	
MT35213	**GouldAMI**	**S35213**	3584
MT3530	**GouldAMI**	**S3530**	3586
MT4320	ITT	DF320	
MT8804	Fairchild	F8804	
	Plessey	MV8804	
MT8860	GTEMicro	G8860	
	Plessey	MB8860	
MT8865	Mostek	MK8865	
	Plessey	MV8865	
MT8870	**GTEMicro**	**G8870**	3594
	Plessey	MV8870	
◆MT8912	GTEMicro	G8912B	
	Harris	**HC5512**	3596
	Intel	2912	
		ID2912	
	National	TP3040	
	Plessey	MV8912	
	SGS	M5912	
	TI	TCM2912B	
MT8940	GouldAMI	S8940	
MT8960	Plessey	MV8960	
MT8961	Plessey	MV8961	
MT8962	Plessey	MV8962	
MT8963	Plessey	MV8963	
MT8964	GouldAMI	S8964	
	Plessey	MV8964	
MT8965	GouldAMI	S8965	
	Plessey	MV8965	
MT8970	GouldAMI	S8970	
MT8975	GouldAMI	S8975	
MT8978	GouldAMI	S8978	
MT8980	GouldAMI	S8980	
MT8981	GouldAMI	S8981	
S35212A	Reticon	R5632	
	GouldAMI	**S35212**	3582
		S35212A	3582
	Sierra	SC11000	
		SC11005	

◆ Discontinued

Bold face device numbers indicate manufacturers data is provided in the IC Master on the pages noted.

Mitsubishi Electronics America, Inc.

Manufacturer Device	Replacement Source	Device	IC Master Page
5117	Fujitsu	MB8416	
	Harris	HM65162	
	IDT	6116	
		IDT6116	
	Mostek	MK6116	
	National	6116	
	NEC	μPD446	
	Nitron	NC6116	
	OKI	**MSM5128**	**4732,4733**
	RCA	CDM6116	
	S-MOS	SRM2016	
	Toshiba	**TC5517A**	**4263**
		TC5517B	
58981	GouldAMI	6504	
	Harris	HM6504	
	Hitachi	4315	
		6147	
	Motorola	6504	
	National	NMC6504	
	OKI	5104	
	RCA	CDM5104	
	Rockwell	R6504	
	Synertek	SY6504	
	Toshiba	TC5504	
M51841	Exar	XR555	
	Fairchild	μA555	
	Hitachi	HA17555	
	Intersil	NE555	
	Mitsubishi	M51848	
		M5251	
		M5E555	
	Motorola	MC1455	
	NEC	μPC1555	
	Raytheon	RC555	
	RCA	CA555	
	Sanyo	LB8555	
	SGS	NE555	
	Signetics	**NE555**	**3721**
		NE555N	
	TI	NE555	
	ThomsonCSF	LM555	
	Samsung	**NE555**	**3679**
M54516	Sanyo	LB1288	
M54523	Exar	XR2003C	
		XR2203C	
	Fairchild	MC1413	
	Motorola	**MC1413**	**3212**
		ULN2003	**3212**
	NEC	μPA2003	
	RIFA	PBD352303	
	Sanyo	LB1233	
	SGS	L203	
		ULN2003	
	Signetics	NE5603	
		ULN2003	**3721**
	SiliconG	SG2003	
	Sprague	ULN-2003	
	Telefunken	TDA2003	
	TI	ULN2003A	
	Toshiba	TD62003	
		TD62103	
M54524	Exar	XR2001	
		XR2001C	
		XR2201C	
	Motorola	**MC1411**	**3212**
		ULN2001	**3212**
	NEC	μPA2001	
	RIFA	PBD3523-11	
	Sanyo	LB1231	
	SGS	L201	
		ULN2001	
	SiliconG	SG2001	
	Sprague	**ULN-2001**	**3269**
		ULQ-2001	
	TI	ULN2001A	
	Toshiba	TD62001	
		TD62101	
M54525	Exar	XR2002C	
		XR2202C	
	Fairchild	MC1412	
	Motorola	**MC1412**	**3212**
		ULN2002	**3212**
	NEC	μPA2002	
	RIFA	PBD352304	
	Sanyo	LB1232	
	SGS	L202	
		ULN2002	
	Signetics	NE5602	

(Continued)

Manufacturer Device	Replacement Source	Device	IC Master Page
M54525	SiliconG	SG2002	
	Sprague	ULN-2002	
	TI	ULN2002A	
	Toshiba	TD62002	
M54526	Exar	XR2204C	
	Motorola	**MC1416**	**3212**
		ULN2004	**3212**
	NEC	μPA2004	
	RIFA	PBD352302	
	Sanyo	LB1234	
	SGS	L204	
		ULN2004	
	Signetics	NE5604	
		ULN2004	**3721**
	SiliconG	SG2004	
	Sprague	ULN-2004	
		ULS-2004	
	TI	ULN2004A	
	Toshiba	TD62004	
		TD62104	
M54527	Sanyo	LB1271	
M54532	**IPS**	**IP2064**	**3599**
	Motorola	ULN2064	
	SGS	ULN2064	
	Sprague	ULN-2064	
	TI	SN75064	
		ULN2064	
	Toshiba	TD62064	
M54535	Sanyo	LB1260	
M54563	Sprague	UDN-2981	
M58275	AMD	AM9128	
		AM9218	
	Cypress	CY7C128	
	Fujitsu	MB8128	
		MB8416	
	Harris	HM6116	
		HM6516	
	IDT	IDT6116	
	Intel	2128	
	MicroPwr	MP6116	
	Mitsubishi	M5M116	
		M5M5116	
		M5M5117	
		M5M5118	
		MS8725	
	Motorola	MCM2016	
		MCM2016H	
		MCM2128	
		MCM6116	**4119**
		MCM61L16	**4119**
		MCM65116	
	National	MMC2116	
	NEC	μPD4016	
	OKI	MSM2128	
		MSM5128	**4732,4733**
	RCA	MWS6116A	
	SSS	883C21C16	
		BCM21C16	
		SCM21C16	
		SCM6116	
	TI	TMS4016	
	ThomsonCSF	ET2128	
	Toshiba	**TC5516A**	**4263**
		TMM2015A	
		TMM2016	
		TMM2016A	**4263**
	Samsung	KM6816	
	UMC	UM2128	
	Universal	US574HC133	
M58333	AMD	AM9232	
	CSG	MPS2332	
	Fairchild	F3532	
	GI	R03-9332	
	GouldAMI	S2333	
		S68A332	
	GTEMicro	G2332	
	Hitachi	HN46332	
	Intech	IM7332	
	Intel	2332	
	Motorola	**MCM68A332**	**4120**
	National	NM52132	
	NCR	NCR2332	
	NEC	UPD2332A	
	Panasonic	MN2332	
	RCA	**CDM5333**	**1673,1677**
	Rockwell	R2332	
	SGS	M2332	
	Sharp	LH2332	
	Siemens	SA88332	
		SAB8332	

(Continued)

Manufacturer Device	Replacement Source	Device	IC Master Page
M58333	Signetics	2332	
		2632A	
	SiliconG	SG3532	
	SSS	SCM23C32	
	SMC	ROM4732	
	Supertex	23SC32	
		CM3200	
	Synertek	SY2332	
	TI	TM2332	
		TMS2332	
		TMS4732	
	Toshiba	TMM2332	
		TMM333P	
	VTI	VT2332	
M58334	AMD	9264	
	GI	R03-9364	
	GouldAMI	S68A364	
	Hitachi	HN48364	
	Intech	IM7364	
	MicroPwr	MP2364C	
	Mostek	MK36000	
	Motorola	**MCM68364**	**4120**
		MCM68365	**4120**
		MCM68366	**4120**
	National	MM52164	
	NEC	UPD2364	
	Rockwell	R2364A	
	SGS	M2362	
		M36000	
	Signetics	2664	
		26S64	
	SSS	SCM23C64	
	SMC	ROM36000	
	Synertek	SY2364/A	
	TI	TMS4764	
	Toshiba	TMM2366	
◆M58653	GI	ER1451	
M5E555	Exar	XR555	
	Fairchild	μA555	
	Hitachi	HA17555	
	Intersil	NE555	
	Mitsubishi	M51841	
		M51848	
		M5251	
	Motorola	MC1455	
	NEC	μPC1555	
	Raytheon	RC555	
	RCA	CA555	
	Sanyo	LB8555	
	SGS	NE555	
	Signetics	**NE555**	**3721**
		NE555N	
	TI	NE555	
	ThomsonCSF	LM555	
	Samsung	**NE555**	**3679**
M5E556	SGS	NE556	
	Signetics	**NE556**	**3721**
	ThomsonCSF	LM556	
	Samsung	**NE556**	**3679**
◆M5G1400	GI	ER1400	
◆M5K4116	Hitachi	HM4716A	
	OKI	MSM3716	
	ThomsonCSF	ET4116	
	Toshiba	TMM416	
◆M5K4164	Fairchild	F64K	
	Fujitsu	MB8264A	
		MB8266A	
	Hitachi	HM4864	
	Inmos	IMS2600	
	MicronTech	MT4264	
	Motorola	MCM4164B	
		MCM6665B	
	National	NMC4164	
	NEC	μPD4164	
	OKI	MSM3764	
	ThomsonCSF	ET4164	
	Toshiba	TMM4164	
	Samsung	KM4164	
M5L2114	AMD	AM9114	
	Fairchild	F2114	
	Hitachi	HM472114	
	Intel	2114	
		2114A	
	Motorola	M5L2114	
		MCM2114	
		MCM21L14	
	National	NMC2114A	
	OKI	MSM2114	
	SSS	SCM2114A	
		SCM21C14	
	Synertek	SY2114	
	Toshiba	TMM2114A	

(Continued)

Manufacturer Device	Replacement Source	Device	IC Master Page
M5L2114	Toshiba	TMM314A	
	UMC	UM2114	
M5L27128	AMD	AM27128	
	Fujitsu	MBM27128	
	Hitachi	HM4827128	
	Intel	27128	
		27128A	**4074**
	Mitsubishi	M5L27C128	
	NEC	μPD27128	
	SEEQ	27128	
	SGS	M27128	
	TI	**TMS27C128**	**4210**
	Toshiba	TMM27128	
◆M5L2716	Hitachi	HN462716	
	National	MM2716	
	OKI	MSM2716	
	SGS	M2716	
	ThomsonCSF	ET2716	
M5L27256	AMD	AM27256	
	Fujitsu	MBM27256	
		MBM27C256	
	GI	R09256	
	Hitachi	HM4827256	
		HN27256	
		HN27C256	**4037**
	Intel	27256	
		27C256	**4079**
	Mitsubishi	MSL27256	
	Motorola	MCM67256	
	National	NMC27C256	
	NEC	MPD27256	
		UPD27256	
		UPD27C256	
		UPD27C256A	
	SEEQ	27256	
		27C256	
	SGS	M27256	
	SSS	SCM27C128	
	Toshiba	TC57256	
		TMM27256	
		TMM27C256	
	VTI	**VT27C256**	**4265,4273**
◆M5L2732	AMD	AM2732	
	Hitachi	HN462732	
	Intel	2732	
		2732A	
		M2732	
	National	MM2732	
		NMC2732	
	Rockwell	R27C32	
	SGS	M2732A	
	Toshiba	TMM324C	
M5L27512	AMD	AM27512	
	Fujitsu	MBM27512	
		MBM27C512	
	Hitachi	HN27512	
	Intel	**27512**	**4076**
	NEC	MPD27C512	
	Toshiba	**TMM27512**	**4263**
M5L2764	AMD	AM2764	
	Fujitsu	MBM2764	
		MBM27C64	
	Hitachi	HM482764	
		HN2764	
		HN27C64	
		HN482764	
	Intel	2764	
		2764A	
		27C64	**4078**
		87C64	**4078**
	NEC	UPD2764	
		UPD27C64	
	OKI	MSM2764	
		MSM2764A	**4732**
		MSM27C64	
	Rockwell	R2764	
		R27C64	
		R87C64	
	S-MOS	SPM27C64	
	SEEQ	2764	
		5133	
	SGS	M2764	
	Signetics	27C64	
	SSS	SCM27C64	
	TI	TMS27C64	
	ThomsonCSF	ET2764	
	Toshiba	**TMM2764**	**4263**
M5L27C128	AMD	AM27128	
	Fujitsu	MBM27128	
	Hitachi	HM4827128	
	Intel	27128	

(Continued)

◆ Discontinued

The manufacturers report their devices can be used as direct replacements.
Performance details often differ, so compare the specifications considering your requirements.

Mitsubishi Electronics America, Inc. (Cont'd)

Manufacturer Device	Replacement Source	Device	IC Master Page
M5L27C128	**Intel**	**27128A**	**4074**
	Mitsubishi	M5L27128	
	NEC	µPD27128	
	SEEQ	27128	
	SGS	M27128	
	TI	**TMS27C128**	**4210**
	Toshiba	TMM27128	
◆M5L8039	Intel	8039	
	Toshiba	**TMP8039**	**1750**
M5L8042	Intel	8042	
M5L8226	Intel	8226	
	National	DP8226	
		INS8226	
	NEC	µPB8226	
M5M116	AMD	AM9128	
		AM9218	
	Cypress	CY7C128	
	Fujitsu	MB8128	
		MB8416	
	Harris	HM6116	
		HM6516	
	IDT	IDT6116	
	Intel	2128	
	MicroPwr	MP6116	
	Mitsubishi	M58275	
		M5M5116	
		M5M5117	
		M5M5118	
		MS8725	
	Motorola	MCM2016	
		MCM2016H	
		MCM2128	
		MCM6116	**4119**
		MCM61L16	**4119**
		MCM65116	
	National	MMC2116	
	NEC	µPD4016	
	OKI	MSM2128	
		MSM5128	**4732,4733**
	RCA	MWS6116A	
	SSS	883C21C16	
		BCM21C16	
		SCM21C16	
		SCM6116	
	TI	TMS4016	
	ThomsonCSF	ET2128	
	Toshiba	**TC5516A**	**4263**
		TMM2015A	
		TMM2016	
		TMM2016A	**4263**
	Samsung	KM6816	
	UMC	UM2128	
	Universal	US574HC133	
M5M2167	AMD	AM2167	
	Cypress	CY7C167	
	Fujitsu	MB8167A	
		MB81C67	
	Harris	HM65262	
	Hitachi	HM6167	
		HM6167H	
		HM6267	
	Inmos	IMS1400	
		IMS1403	**4042**
	IDT	IDT6167	
	Intel	51C67	
	Motorola	MCM2167H	
	NEC	UPD2167	
M5M2168	AMD	AM2168	
		AM99C68	
	Cypress	CY7C168	
	Fujitsu	MB8168	
	Hitachi	HM6168	
	Inmos	IMS1420	
		IMS1421	
		IMS1423	
	IDT	IDT6168	
	Motorola	MCM6168	
	TI	TMS2168	
M5M23128	AMD	AM92128	
	GI	R09128	
		SPR-128	
	GouldAMI	S23128	
		S3630A	
	GTEMicro	G53128	
	Hitachi	HN613128	
		HN613128P	
	Motorola	MCM63128	
	NCR	NCR23128	
M5M23128	NEC	UPD23128	
		UPD23128A	
		UPD23128E	
		UPD23C128	
		UPD23C128E	
	RCA	**CDM53128**	**1673,1677**
	Rockwell	R23128	
	Signetics	23128	
	SSS	SCM23C128	
	Supertex	CM1310	
	Synertek	SY23128	
	Toshiba	TMM23128	
	UMC	UM23128	
	VTI	23131	
		VT23128	
		VT23129	
		VT23129A	
		VT23130	
		VT23138	
M5M23256	AMD	AM92256	
	Fujitsu	MB83256	
	GI	R09256	
	GouldAMI	S23256	
		S38256	
	GTEMicro	G53256	
	Hitachi	HN613256	
	Mostek	MK38000	
	Motorola	MCM63256	
		MCM65256	
	NCR	NCR23256	
		NCR23257	
	NEC	UPD23256	
		UPD23256A	
		UPD23C256E	
	OKI	**MSM38256**	**4733**
	Panasonic	MN23256	
		MN23257	
	RCA	CDM52356	
		CDM53256	**1673,1678**
	S-MOS	**SMM2326**	**4178**
		SMM6325	**4178**
		SMM6326	**4178**
	Signetics	23256	
		23256A	
	SSS	SCM23C256	
	Supertex	CM2560	
	Toshiba	**TMM23256**	**4263**
	UMC	UM23256	
	VTI	23257	
		VT23256	
		VT23257	
M5M2364	AMD	AM9265	
	Fairchild	F3568	
		F3569	
		F3570	
	GI	R03-9365	
		R09864	
	GouldAMI	S2364	
		S6364	
	GTEMicro	G5364	
	Hitachi	HN61364	
	Intel	2364A	
	Mitsubishi	M5M2365	
		M5M23C64	
	Mostek	MK37000	
	Motorola	MCM68369	
		MCM68370	
	National	MM52264	
		NM52264	
	OKI	**MSM3864**	**4733**
	Panasonic	MN2364	
		MN4864	
	RCA	**CDM5365**	**1673,1677**
	Rockwell	R2364B	
	SSS	SCM23C65	
	Supertex	23SC64	
		23SC64/A	
		CM6400	
	Synertek	SY2365/A	
	TI	TMS2364	
		TMS4764	
	Toshiba	TMM2365	
	UMC	UM2366	
	VTI	VT2365	
M5M2365	AMD	AM9265	
	Fairchild	F3568	
		F3569	
		F3570	
	GI	R03-9365	
M5M2365	GI	R09864	
	GouldAMI	S2364	
		S6364	
	GTEMicro	G5364	
	Hitachi	HN61364	
	Intel	2364A	
	Mitsubishi	M5M2364	
		M5M23C64	
	Mostek	MK37000	
	Motorola	MCM68369	
		MCM68370	
	National	MM52264	
		NM52264	
	OKI	**MSM3864**	**4733**
	Panasonic	MN2364	
		MN4864	
	RCA	**CDM5365**	**1673,1677**
	Rockwell	R2364B	
	SSS	SCM23C65	
	Supertex	23SC64	
		23SC64/A	
		CM6400	
	Synertek	SY2365/A	
	TI	TMS2364	
		TMS4764	
	Toshiba	TMM2365	
	UMC	UM2366	
	VTI	VT2365	
M5M23C64	AMD	AM9265	
	Fairchild	F3568	
		F3569	
		F3570	
	GI	R03-9365	
		R09864	
	GouldAMI	S2364	
		S6364	
	GTEMicro	G5364	
	Hitachi	HN61364	
	Intel	2364A	
	Mitsubishi	M5M2364	
		M5M2365	
	Mostek	MK37000	
	Motorola	MCM68369	
		MCM68370	
	National	MM52264	
		NM52264	
	OKI	**MSM3864**	**4733**
	Panasonic	MN2364	
		MN4864	
	RCA	**CDM5365**	**1673,1677**
	Rockwell	R2364B	
	SSS	SCM23C65	
	Supertex	23SC64	
		23SC64/A	
		CM6400	
	Synertek	SY2365/A	
	TI	TMS2364	
		TMS4764	
	Toshiba	TMM2365	
	UMC	UM2366	
	VTI	VT2365	
M5M4256	AMD	MCM6256	
	AT&T	WCM41256	
	Fujitsu	MB81256	
	Hitachi	HM50256	
		HM50257	
	MicronTech	MT1256	
	Mitsubishi	MSM4257	
	Motorola	MCM6256	
		MCM6257	
	NEC	MPD41257	
		µPD41256	
	OKI	M5M37256	
		MSM37256	
		MSM41256	
	Panasonic	MM41256	
	TI	TMS4257	
	Toshiba	TMM41256	
	Samsung	KM1256	
M5M4257	Toshiba	TMM41257	
M5M4416	Fujitsu	MB81416	
	Hitachi	HM48416	
	Inmos	IMS2620	
	TI	TMS4416	
M5M5116	AMD	AM9128	
		AM9218	
	Cypress	CY7C128	
	Fujitsu	MB8128	
		MB8416	
	Harris	HM6116	
M5M5116	Harris	HM6516	
	IDT	IDT6116	
	Intel	2128	
	MicroPwr	MP6116	
	Mitsubishi	M58275	
		M5M116	
		M5M5117	
		M5M5118	
		MS8725	
	Motorola	MCM2016	
		MCM2016H	
		MCM2128	
		MCM6116	**4119**
		MCM61L16	**4119**
		MCM65116	
	National	MMC2116	
	NEC	µPD4016	
	OKI	MSM2128	
		MSM5128	**4732,4733**
	RCA	MWS6116A	
	SSS	883C21C16	
		BCM21C16	
		SCM21C16	
		SCM6116	
	TI	TMS4016	
	ThomsonCSF	ET2128	
	Toshiba	**TC5516A**	**4263**
		TMM2015A	
		TMM2016	
		TMM2016A	**4263**
	Samsung	KM6816	
	UMC	UM2128	
	Universal	US574HC133	
M5M5117	AMD	AM9128	
		AM9218	
	Cypress	CY7C128	
	Fujitsu	MB8128	
		MB8416	
	Harris	HM6116	
		HM6516	
	IDT	IDT6116	
	Intel	2128	
	MicroPwr	MP6116	
	Mitsubishi	M58275	
		M5M116	
		M5M5116	
		M5M5118	
		MS8725	
	Motorola	MCM2016	
		MCM2016H	
		MCM2128	
		MCM6116	**4119**
		MCM61L16	**4119**
		MCM65116	
	National	MMC2116	
	NEC	µPD4016	
	OKI	MSM2128	
		MSM5128	**4732,4733**
	RCA	MWS6116A	
	SSS	883C21C16	
		BCM21C16	
		SCM21C16	
		SCM6116	
	TI	TMS4016	
	ThomsonCSF	ET2128	
	Toshiba	**TC5516A**	**4263**
		TMM2015A	
		TMM2016	
		TMM2016A	**4263**
	Samsung	KM6816	
	UMC	UM2128	
	Universal	US574HC133	
M5M5118	AMD	AM9128	
		AM9218	
	Cypress	CY7C128	
	Fujitsu	MB8128	
		MB8416	
	Harris	HM6116	
		HM6516	
	IDT	IDT6116	
	Intel	2128	
	MicroPwr	MP6116	
	Mitsubishi	M58275	
		M5M116	
		M5M5116	
		M5M5117	
		MS8725	
	Motorola	MCM2016	
		MCM2016H	
		MCM2128	

(Continued)

◆ Discontinued

Bold face device numbers indicate manufacturers data is provided in the IC Master on the pages noted.

Mitsubishi Electronics America, Inc. (Cont'd)

Manufacturer Device	Replacement Source	Device	IC Master Page
M5M5118	**Motorola**	**MCM6116**	**4119**
		MCM61L16	**4119**
		MCM65116	
	National	MMC2116	
	NEC	μPD4016	
	OKI	MSM2128	
		MSM5128	**4732,4733**
	RCA	MWS6116A	
	SSS	883C21C16	
		BCM21C16	
		SCM21C16	
		SCM6116	
	TI	TMS4016	
	ThomsonCSF	ET2128	
	Toshiba	**TC5516A**	**4263**
		TMM2015A	
		TMM2016	
		TMM2016A	**4263**
	Samsung	KM6816	
	UMC	UM2128	
	Universal	US574HC133	
M5M5165	AMD	AM9988	
		AM9988C	
	Cypress	CY7C186	
	Fujitsu	MB8464	
		MB8464A	
	Hitachi	HM6264	
		HM6464	
	IDT	IDT7188	
		IDT7M864	
	Motorola	MCM6164	
	NEC	μPD4364	
		μPD4464	
	OKI	MSM5164	
		MSM5165	
	RCA	CDM6264	
	S-MOS	SRM2064	
		SRM2264	**4177,4178**
	Sharp	LH5164	
	Toshiba	TC5564	
		TC5565	
		TMM2063	
		TMM2064	
	Samsung	KM6264	
M5M80C39	Intel	80C39	
	Signetics	**SCC80C39**	**1710**
	Toshiba	TMP80C39	
MS8725	AMD	AM9128	
		AM9218	
	Cypress	CY7C128	
	Fujitsu	MB8128	
		MB8416	
	Harris	HM6116	
		HM6516	
	IDT	IDT6116	
	Intel	2128	
	MicroPwr	MP6116	
	Mitsubishi	M58275	
		M5M116	
		M5M5116	
		M5M5117	
		M5M5118	
	Motorola	MCM2016	
		MCM2016H	
		MCM2128	
		MCM6116	**4119**
		MCM61L16	**4119**
		MCM65116	
	National	MMC2116	
	NEC	μPD4016	
	OKI	MSM2128	
		MSM5128	**4732,4733**
	RCA	MWS6116A	
	SSS	883C21C16	
		BCM21C16	
		SCM21C16	
		SCM6116	
	TI	TMS4016	
	ThomsonCSF	ET2128	
	Toshiba	**TC5516A**	**4263**
		TMM2015A	
		TMM2016	
		TMM2016A	**4263**
	Samsung	KM6816	
	UMC	UM2128	
	Universal	US574HC133	
MSL27256	AMD	AM27256	
	Fujitsu	MBM27256	
		MBM27C256	
	GI	R09256	
	Hitachi	HM4827256	
		HN27256	
		HN27C256	**4037**
	Intel	27256	
		27C256	**4079**
	Mitsubishi	M5L27256	
	Motorola	MCM67256	
	National	NMC27C256	
	NEC	MPD27256	
		UPD27256	
		UPD27C256	
		UPD27C256A	
	SEEQ	27256	
		27C256	
	SGS	M27256	
	SSS	SCM27C128	
	Toshiba	TC57256	
		TMM27256	
		TMM27C256	
	VTI	**VT27C256**	**4265,4273**
MSM4257	AMD	MCM6256	
	AT&T	WCM41256	
	Fujitsu	MB81256	
	Hitachi	HM50256	
		HM50257	
	MicronTech	MT1256	
	Mitsubishi	M5M4256	
	Motorola	MCM6256	
		MCM6257	
	NEC	MPD41257	
		μPD41256	
	OKI	M5M37256	
		MSM37256	
		MSM41256	
	Panasonic	MM41256	
	TI	TMS4257	
	Toshiba	TMM41256	
	Samsung	KM1256	
MSM4464P	Fujitsu	MB81464	
	Hitachi	HM50464	
	NEC	UPD41464C	
	Toshiba	TMM41464	

Monolithic Memories, Inc.

Manufacturer Device	Replacement Source	Device	IC Master Page
4511	Fairchild	F4511	
	Mitel	MD4511	
	Motorola	MC14511	
	National	CD4511	
	NEC	μPD4511	
	RCA	CD4511	
	SGS	HCC/HCF4511	
	Signetics	HEF4511	
	Solitron	CM4511	
	SSS	SCL4511	
	Toshiba	TC4511	
5300-1	**MMI**	**53S140**	**4101**
	National	DM54S387	
	Signetics	S82S126	
	TI	TBP24SA10M	
5301-1	**MMI**	**53S141**	**4101**
	National	DM54S287	
	Signetics	S82S129	
5305-1	**MMI**	**53S240**	**4101**
	National	DM54S570	
	Signetics	S82S130	
5306-1	**MMI**	**53S241**	**4101**
	National	DM54S571	
	Signetics	S82S131	
5308	National	DM54S470	
5308-1	TI	TBP28LA22M	
5309	National	DM54S471	
5309-1	**TI**	**TBP28L22M**	**729**
5330-1	AMD	AM27LS18	
	MMI	53LS080	
		63LS080	
	National	DM54S188	
		DM7577	
	Signetics	S82S23	
5331-1	AMD	AM27LS19	
		AM27S19	
	Fujitsu	MB7112	
	MMI	**53S081**	**4101**
		6331-1	
		63S081	**4101,4102**
	Motorola	MCM27S19	
	National	DM74S288	

(Continued)

Manufacturer Device	Replacement Source	Device	IC Master Page
5331-1	National	DM8578	
	Signetics	**N82S123**	**4166**
		S82S123	
	TI	**TBP18S030**	**729**
5340-1	National	DM54S475	
		DM77S295	
		DM87S295	
	Signetics	S82S140	
5341-1	National	DM54S474	
	Signetics	S82S141	
	TI	TBP28S46M	
5348-1	National	DM54S473	
	Signetics	S82S146	
5349-1	AMD	27S29	
		LF157A	
	Fairchild	LF157A	
	Harris	7649	
	MMI	6349-1	
	National	545472	
		74S472	
		LF157A	
	PMI	PM157A	
	Raytheon	**29621**	**4134**
	Signetics	825147	
	TI	28S42	
5352-1	AMD	AM27S32	
	Fairchild	93452	
	Fujitsu	MB7121	
	Hitachi	HN25044	
	MMI	**6352**	**4102**
	National	DM54S572	
	Signetics	S82S136	
	TI	TBP24SA41M	
5353-1	AMD	AM27S33	
	Fairchild	93453	
	Fujitsu	MB7122	
	Hitachi	HN25045	
	MMI	535441	
		6353-1	
		63S441	**4101,4102**
		G35441	
	Motorola	**MCM7643**	**4124**
	National	DM74S573	
	NEC	UPB426	
	Signetics	N72HS137	
		N825137	
		N82S137	**4166**
		S82S195	
	TI	TBP24S41	
535441	AMD	AM27S33	
	Fairchild	93453	
	Fujitsu	MB7122	
	Hitachi	HN25045	
	MMI	5353-1	
		6353-1	
		63S441	**4101,4102**
		G35441	
	Motorola	**MCM7643**	**4124**
	National	DM74S573	
	NEC	UPB426	
	Signetics	N72HS137	
		N825137	
		N82S137	**4166**
		S82S195	
	TI	TBP24S41	
5380-1	National	DM77S180	
	Signetics	S82S180	
	TI	TBP28SA86AM	
5381-1	AMD	AM27S181M	
	Cypress	CY7C282M	
	Fairchild	932451	
		93451	
	Fujitsu	MB7132	
	Harris	7681	
	Hitachi	HN25089	
	MMI	**6381**	**4102**
		6381-1	
	Motorola	**MCM7681**	**4124**
	National	DM77S181	
		DM77S281	
		DM87S281	
	Raytheon	29631AM	
		29632	
	Signetics	82S181	
		NS82HS195	
		S82HS181	
		S82S181	
	TI	28S86	
		TBP28S86AM	
5388	MMI	5388-1	
	National	DM77S184	
5388-1	MMI	5388	
	National	DM77S184	
5389	AMD	27S185	
		AM27S185	
	Fujitsu	MB7128	
	Hitachi	HN25085	
	MMI	**6389**	**4102**
		6389-1	
		63S841	**4101,4102**
	Motorola	**MCM7685**	**4124**
	National	77S185	
		87S185	
		DM87S185	
	Raytheon	29651	
		29651A	**4134**
	Signetics	82S185	
		N82HS185	
		N82S185	**4166**
	TI	24S81	
		TBP24S81	
5389-1	MMI	5389	
	National	DM77S185	
	Raytheon	29651AM	
	Signetics	S82HS185	
		S82S185	
	TI	TBP24S81M	
53DA1643	AMD	AM27S85	
	MMI	**63D1641**	**4101,4103,4109**
		63DA1643	**4101,4103**
53DA441	**MMI**	**63DA441**	**4101,4103**
53DA841	**MMI**	**63DA841**	**4101,4103**
53LS080	AMD	AM27LS18	
	MMI	5330-1	
		63LS080	
	National	DM54S188	
		DM7577	
	Signetics	S82S23	
53PS1681	AMD	27PS191	
	MMI	63PS1681	
	Raytheon	**29683**	**4134**
	TI	28P166	
53RA481	AMD	AM21L49	
		AM27S25	
	Cypress	CY7C225	
	Fujitsu	MB7226	
	MMI	**63RA481**	**4101**
	Motorola	MCM27S25	
	National	DM87SR25	
		DM87SR474	
53RA881	AMD	AM27S35	
		AM27S37	
	Cypress	CY7C235	
	Fujitsu	MB7232	
	MMI	63RA881	
		63RS881	**4101,4103**
	Motorola	MCM27S35	
	National	DM87SR181	
53S081	AMD	AM27LS19	
		AM27S19	
	Fujitsu	MB7112	
	MMI	5331-1	
		6331-1	
		63S081	**4101,4102**
	Motorola	MCM27S19	
	National	DM74S288	
		DM8578	
	Signetics	**N82S123**	**4166**
		S82S123	
	TI	**TBP18S030**	**729**
53S140	MMI	5300-1	
	National	DM54S387	
	Signetics	S82S126	
	TI	TBP24SA10M	
53S141	MMI	5301-1	
	National	DM54S287	
	Signetics	S82S129	
53S1641	AMD	AM27541	
		AM27S41	
	Fujitsu	MB7134	
		MB7152	
	MMI	**63S1641**	**4101,4103**
	Motorola	**MCM76161**	**4124**
	National	DM77S195	
		DM87S195	
	Signetics	NS82HS195	
		NS82S195	

◆ Discontinued

The manufacturers report their devices can be used as direct replacements.
Performance details often differ, so compare the specifications considering your requirements.

Monolithic Memories, Inc. (Cont'd)

Manufacturer Device	Replacement Source	Device	IC Master Page
53S1681	EXEL	XL46C16	
	Fairchild	932511M	
	Fujitsu	MB7138E	
	Harris	HM6616	
		HM76161	
	Hitachi	HN25169S	
	Motorola	**MCM76161**	**4124**
	National	DM77S191	
		DM77S191A	
		DM77S291	
		DM77S291A	
	Raytheon	**29681**	**4134**
		29681A	**4134**
		29683	**4134**
		29683A	**4134**
	ThomsonCSF	SFC71191A	
53S240	MMI	5305-1	
	National	DM54S570	
	Signetics	S82S130	
53S241	MMI	5306-1	
	National	DM54S571	
	Signetics	S82S131	
53S3281	AMD	27S43	
		AM27S43	
	Fujitsu	MB7142	
	MMI	**63S3281**	**4101,4103**
	National	77S321	
		87S321	
		DM87S321	
	Raytheon	**29671**	**4134**
	Signetics	82S321	
		N82S321	**4167**
53S441	AMD	AM27S33M	
	Motorola	MCM7643M	
	National	DM54S573	
		DM54S573A	
	Signetics	S82HS137	
		S82S137	
		S82S195	
	TI	TBP24S41M	
54S283	**TI**	**SN54S283**	**716**
54S534	Signetics	54S534	
54S558	AMD	AM25S558M	
54S730	AMD	AM2965M	
54S734	AMD	AM2966M	
57401	Cypress	CY7C401	
	Fairchild	**74F413**	**1027**
	National	DM77S401	
57402	Cypress	CY7C402	
	National	DM77S402	
6300-1	AMD	AM27S20	
	Fujitsu	MB7113	
	MMI	**63S140**	**4101,4102**
	National	DM74S387	
	Signetics	**N82S126**	**4166**
	TI	TBP24SA10	
6301-1	AMD	27521	
		AM27S11	
		AM27S21	
	Fujitsu	MB7114	
	MMI	**63S141**	**4101,4102**
	National	DM74S287	
	Signetics	**N82S129**	**4166**
	TI	**TBP24S10**	**729**
6305-1	AMD	AM27S12	
	Fujitsu	MB7115	
	MMI	**63S240**	**4101,4102**
	National	DM74S570	
	Signetics	**N82S130**	**4166**
6306-1	AMD	AM27S13	
	Fujitsu	MB7116	
	Harris	HM7621	
	MMI	**63S241**	**4101,4102**
	Motorola	**MCM7621**	**4124**
	National	DM74S571	
	Signetics	**N82S131**	**4166**
6308-1	Fujitsu	MB7117	
	TI	TBP28LA22	
6309	National	DM74LS471	
6309-1	Fujitsu	MB7118	
	TI	**TBP28L22**	**729**
6330	AMD	AM27S18	
	Fujitsu	MB7111	
	Harris	HM7602	
	National	DM74S188	
	Signetics	**N82S23**	**4166**
	TI	TBP18SA30	
6331-1	AMD	AM27LS19	
		AM27S19	
	Fujitsu	MB7112	
	MMI	5331-1	
		53S081	**4101**
		63S081	**4101,4102**
	Motorola	MCM27S19	
	National	DM74S288	
		DM8578	
	Signetics	**N82S123**	**4166**
		S82S123	
	TI	**TBP18S030**	**729**
6340-1	AMD	AM27S30	
	National	DM74S475	
		DM77S475	
		DM87S475	
	Signetics	N82S140	
	TI	TBP28SA46	
6341-1	AMD	AM27S31	
	Motorola	**MCM7641**	**4124**
	National	DM74S474	
	Signetics	N82S141	
	TI	TBP28S46	
6348-1	AMD	AM27S28	
	Fujitsu	MB7123	
	National	DM74S473	
	Signetics	N82S146	
	TI	TBP28SA42	
6349-1	AMD	27S29	
		LF157A	
	Fairchild	LF157A	
	Harris	7649	
	MMI	5349-1	
	National	545472	
		74S472	
		LF157A	
	PMI	PM157A	
	Raytheon	**29621**	**4134**
	Signetics	825147	
	TI	28S42	
6349-2	AMD	AM27S29	
	Fujitsu	MB7124	
	National	DM54S472	
		DM74S472	
	Raytheon	**29623**	**4134**
	Signetics	N82S147	
6352	AMD	AM27S32	
	Fairchild	93452	
	Fujitsu	MB7121	
	Hitachi	HN25044	
	MMI	5352-1	
	National	DM54S572	
	Signetics	S82S136	
	TI	TBP24SA41M	
6353-1	AMD	AM27S33	
	Fairchild	93453	
	Fujitsu	MB7122	
	Hitachi	HN25045	
	MMI	5353-1	
		535441	
		63S441	**4101,4102**
		G35441	
	Motorola	**MCM7643**	**4124**
	National	DM74S573	
	NEC	UPB426	
	Signetics	N72HS137	
		N825137	
		N82S137	**4166**
		S82S195	
	TI	TBP24S41	
6380-1	AMD	AM27S180	
	Fujitsu	MB7131	
	National	DM87S180	
		DM87S229	
	Signetics	N82S180	
	TI	TBP28SA86A	
6381	AMD	AM27S181M	
	Cypress	CY7C282M	
	Fairchild	932451	
		93451	
	Fujitsu	MB7132	
	Harris	7681	
	Hitachi	HN25089	
	MMI	5381-1	
		6381-1	
	Motorola	**MCM7681**	**4124**
	National	DM77S181	
		DM77S281	
		DM87S281	
	Raytheon	29631AM	
		29632	
	Signetics	82S181	
			(Continued)
6381	Signetics	NS82HS195	
		S82HS181	
		S82S181	
	TI	28S86	
		TBP28S86AM	
6381-1	AMD	AM27S181M	
	Cypress	CY7C282M	
	Fairchild	932451	
		93451	
	Fujitsu	MB7132	
	Harris	7681	
	Hitachi	HN25089	
	MMI	5381-1	
		6381	**4102**
	Motorola	**MCM7681**	**4124**
	National	DM77S181	
		DM77S281	
		DM87S281	
	Raytheon	29631AM	
		29632	
	Signetics	82S181	
		NS82HS195	
		S82HS181	
		S82S181	
	TI	28S86	
		TBP28S86AM	
6388	AMD	AM27S184	
	Fujitsu	MB7127	
	Hitachi	HM25045	
	MMI	6388-1	
	National	DM87S184	
	Signetics	N82S184	
	TI	TBP24SA81	
6388-1	AMD	AM27S184	
	Fujitsu	MB7127	
	Hitachi	HM25045	
	MMI	6388	
	National	DM87S184	
	Signetics	N82S184	
	TI	TBP24SA81	
6389	AMD	27S185	
		AM27S185	
	Fujitsu	MB7128	
	Hitachi	HN25085	
	MMI	5389	
		6389-1	
		63S841	**4101,4102**
	Motorola	**MCM7685**	**4124**
	National	77S185	
		87S185	
		DM87S185	
	Raytheon	29651	
		29651A	**4134**
	Signetics	82S185	
		N82HS185	
		N82S185	**4166**
	TI	24S81	
		TBP24S81	
6389-1	AMD	27S185	
		AM27S185	
	Fujitsu	MB7128	
	Hitachi	HN25085	
	MMI	5389	
		6389	**4102**
		63S841	**4101,4102**
	Motorola	**MCM7685**	**4124**
	National	77S185	
		87S185	
		DM87S185	
	Raytheon	29651	
		29651A	**4134**
	Signetics	82S185	
		N82HS185	
		N82S185	**4166**
	TI	24S81	
		TBP24S81	
63D1641	AMD	AM27S85	
	MMI	**53DA1643**	**4101**
		63DA1643	**4101,4103**
63DA1643	AMD	AM27S85	
	MMI	**53DA1643**	**4101**
		63D1641	**4101,4103,4109**
63DA441	**MMI**	**53DA441**	**4101**
63DA841	**MMI**	**53DA841**	**4101**
63LS080	AMD	AM27LS18	
	MMI	5330-1	
		53LS080	
	National	DM54S188	
		DM7577	
	Signetics	S82S23	
63PS1681	AMD	27PS191	
	MMI	53PS1681	
	Raytheon	**29683**	**4134**
	TI	28P166	
63RA1681	AMD	AM27S45	
		AM27S47	
	Cypress	CY7C245	
63RA481	AMD	AM21L49	
		AM27S25	
	Cypress	CY7C225	
	Fujitsu	MB7226	
	MMI	**53RA481**	**4101**
	Motorola	MCM27S25	
	National	DM87SR25	
		DM87SR474	
63RA881	AMD	AM27S35	
		AM27S37	
	Cypress	CY7C235	
	Fujitsu	MB7232	
	MMI	53RA881	
		63RS881	**4101,4103**
	Motorola	MCM27S35	
	National	DM87SR181	
63RS881	AMD	AM27S35	
		AM27S37	
	Cypress	CY7C235	
	Fujitsu	MB7232	
	MMI	53RA881	
		63RA881	
	Motorola	MCM27S35	
	National	DM87SR181	
63S081	AMD	AM27LS19	
		AM27S19	
	Fujitsu	MB7112	
	MMI	5331-1	
		53S081	**4101**
		6331-1	
	Motorola	MCM27S19	
	National	DM74S288	
		DM8578	
	Signetics	**N82S123**	**4166**
		S82S123	
	TI	**TBP18S030**	**729**
63S140	AMD	AM27S20	
	Fujitsu	MB7113	
	MMI	6300-1	
	National	DM74S387	
	Signetics	**N82S126**	**4166**
	TI	TBP24SA10	
63S141	AMD	27521	
		AM27S11	
		AM27S21	
	Fujitsu	MB7114	
	MMI	6301-1	
	National	DM74S287	
	Signetics	**N82S129**	**4166**
	TI	**TBP24S10**	**729**
63S1641	AMD	AM27541	
		AM27S41	
	Fujitsu	MB7134	
		MB7152	
	MMI	**53S1641**	**4101**
	Motorola	**MCM76161**	**4124**
	National	DM77S195	
		DM87S195	
	Signetics	NS82HS195	
		NS82S195	
63S1681	AMD	27S191	
		AM27S191	
	Fairchild	932511	
	Fujitsu	MB7138	
	Harris	76161	
		HM76161	
	Hitachi	HN25169	
	Motorola	MCM76101	
	National	77S191	
		87S191	
		DM87S191	
	Raytheon	**29681**	**4134**
	Signetics	82S191	
		N82S191	**4167**
	TI	28S166	
		TBP28S166	
63S181	AMD	AM27S191	
		AM27S291	
	Fairchild	932511	
	Fujitsu	MB7138H	
	Harris	HM76161	
	Motorola	MCM76	
	National	DM878291	

(Continued)

◆ Discontinued

Bold face device numbers indicate manufacturers data is provided in the IC Master on the pages noted.

Monolithic Memories, Inc. (Cont'd)

Manufacturer Device	Replacement Source	Device	IC Master Page
63S181	NEC	µPB429	
	Raytheon	**29683A**	**4134**
63S240	AMD	AM27S12	
	Fujitsu	MB7115	
	MMI	6305-1	
	National	DM74S570	
	Signetics	**N82S130**	**4166**
63S241	AMD	AM27S13	
	Fujitsu	MB7116	
	Harris	HM7621	
	MMI	6306-1	
	Motorola	**MCM7621**	**4124**
	National	DM74S571	
	Signetics	**N82S131**	**4166**
63S3281	AMD	27S43	
		AM27S43	
	Fujitsu	MB7142	
	MMI	**53S3281**	**691,4101**
	National	77S321	
		87S321	
		DM87S321	
	Raytheon	**29671**	**4134**
	Signetics	82S321	
		N82S321	**4167**
63S441	AMD	AM27S33	
	Fairchild	93453	
	Fujitsu	MB7122	
	Hitachi	HN25045	
	MMI	5353-1	
		535441	
		6353-1	
		G35441	
	Motorola	**MCM7643**	**4124**
	National	DM74S573	
	NEC	UPB426	
	Signetics	N72HS137	
		N825137	
		N82S137	**4166**
		S82S195	
	TI	TBP24S41	
63S481	National	DM74S472	
	Signetics	N82S147	
63S841	AMD	27S185	
		AM27S185	
	Fujitsu	MB7128	
	Hitachi	HN25085	
	MMI	5389	
		6389	**4102**
		6389-1	
	Motorola	**MCM7685**	**4124**
	National	77S185	
		87S185	
		DM87S185	
	Raytheon	29651	
		29651A	**4134**
	Signetics	82S185	
		N82HS185	
		N82S185	**4166**
	TI	24S81	
		TBP24S81	
67402	Cypress	CY7C402	
	National	DM87S402	
◆67558	MMI	74S558	
74LS645-1	Signetics	SN74LS645-1	
	TI	SN74LS645-1	
74S225A	TI	SN74S225	
74S408	National	DP8408	
◆74S409	National	DP8409	
74S557	Fairchild	74F557	
74S558	AMD	AM25S557	
		AM25S558	
	Fairchild	74F558	
	LogicDev	LMU558	
	MMI	SN54558	
		SN74558	
◆74S730	AMD	AM2965	
◆74S734	AMD	AM2966	
G35441	AMD	AM27S33	
	Fairchild	93453	
	Fujitsu	MB7122	
	Hitachi	HN25045	
	MMI	5353-1	
		535441	
		6353-1	
		63S441	**4101,4102**
	Motorola	**MCM7643**	**4124**
	National	DM74S573	
	NEC	UPB426	
	Signetics	N72HS137	
		(Continued)	
G35441	Signetics	N825137	
		N82S137	**4166**
		S82S195	
	TI	TBP24S41	
HAL-16H2	SPI	SP816H2	
HAL10H8C	SPI	SP810H8	
	Zytrex	ZX-CAL10H8	
HAL10L8C	SPI	SP810L8	
	Zytrex	ZX-CAL10L8	
HAL12H6C	SPI	SP812H6	
	Zytrex	ZX-CAL12H6C	
HAL12L6C	SPI	SP812L6	
	Zytrex	ZX-CAL12L6	
HAL14H4C	SPI	SP814H4	
	Zytrex	ZX-CAL-14H4	
HAL14L4C	SPI	SP814L4	
	Zytrex	ZX-CAL14L4	
HAL16C1	SPI	SP816C1	
HAL16L2C	SPI	SP816L2	
MC10H101	**Motorola**	**MC10H101**	**1123**
MC10H102	**Motorola**	**MC10H102**	**1122**
MC10H103	**Motorola**	**MC10H103**	**1122**
MC10H104	**Motorola**	**MC10H104**	**1122**
MC10H105	**Motorola**	**MC10H105**	**1123**
MC10H107	**Motorola**	**MC10H107**	**1123**
MC10H125	**Motorola**	**MC10H125**	**1124**
MC10H130	**Motorola**	**MC10H130**	**1126**
MC10H131	**Motorola**	**MC10H131**	**1126**
MC10H141	**Motorola**	**MC10H141**	**1128**
MC10H158	**Motorola**	**MC10H158**	**1129**
MC10H159	**Motorola**	**MC10H159**	**1129**
MC10H160	**Motorola**	**MC10H160**	**1132**
MC10H164	**Motorola**	**MC10H164**	**1129**
MC10H173	**Motorola**	**MC10H173**	**1129**
MC10H175	**Motorola**	**MC10H175**	**1126**
MC10H210	**Motorola**	**MC10H210**	**1122**
MC10H211	**Motorola**	**MC10H211**	**1123**
PAL10H8	National	PAL10H8	
PAL10L8	National	PAL10L8	
PAL12H6	National	PAL12H6	
PAL12L10	National	PAL12L10	
PAL12L6	National	PAL12L6	
PAL14H4	National	PAL14H4	
PAL14H8	National	DMPAL14H8	
PAL14L4	National	PAL14L4	
PAL14L8	AMD	AMPAL22V10	
	Cypress	PALC22U10	
	National	PAL14L8	
PAL16A4	National	PAL16A4	
PAL16C1	National	PAL16C1	
PAL16H2	National	PAL16H2	
PAL16H6	National	PAL16H6	
PAL16L2	National	PAL16L2	
PAL16L6	National	PAL16L6	
PAL16L8	Cypress	CYPAL16L8	
	MMI	PAL16L8A	
	TI	**PAL16L8A**	**725**
		TIBPAL16L8-20	
PAL16L8A	Cypress	CYPAL16L8	
	MMI	PAL16L8	
	TI	**PAL16L8A**	**725**
		TIBPAL16L8-20	
PAL16L8A-2	AMD	AMPAL16L8L	
	TI	PAL16LA8-2	
PAL16P8A	AMD	AMPAL16H8	
PAL16R4	AMD	AMPAL16R4	
	Cypress	CYPAL16R4	
	MMI	PAL16R4A	
	National	PAL16R4	
	TI	**PAL16R4A**	**725**
		TIBPAL16R4-20	
		TIBPAL16R4-25	**725,4759**
		TIBPAL16R4-30	
PAL16R4A	AMD	AMPAL16R4	
	Cypress	CYPAL16R4	
	MMI	PAL16R4	
	National	PAL16R4	
	TI	**PAL16R4A**	**725**
		TIBPAL16R4-20	
		TIBPAL16R4-25	**725,4759**
		TIBPAL16R4-30	
PAL16R4A-2	AMD	AMPALR4L	
	TI	**PAL16R4A-2**	**725**
PAL16R6	AMD	AMPAL16R6	
	Cypress	CYPAL16R6	
	MMI	PAL16R6A	
	National	PAL16R6	
	TI	**PAL16R6A**	**725**
		TIBPAL16R6-20	
		(Continued)	
PAL16R6	**TI**	**TIBPAL16R6-25**	**725,4759**
		TIBPAL16R6-30	
PAL16R6A	AMD	AMPAL16R6	
	Cypress	CYPAL16R6	
	MMI	PAL16R6	
	National	PAL16R6	
	TI	**PAL16R6A**	**725**
		TIBPAL16R6-20	
		TIBPAL16R6-25	**725,4759**
		TIBPAL16R6-30	
PAL16R6A-2	AMD	AMPAL16R6L	
	TI	**PAL16R6A-2**	**725**
PAL16R8	Cypress	CYPAL16R8	
	MMI	PAL16R8A	
	TI	SN74PAL16R8A	
		TIBPAL16R8-20	
		TIBPAL16R8-25	**725,4759**
		TIBPAL16R8-30	
PAL16R8A	Cypress	CYPAL16R8	
	MMI	PAL16R8	
	TI	SN74PAL16R8A	
		TIBPAL16R8-20	
		TIBPAL16R8-25	**725,4759**
		TIBPAL16R8-30	
PAL16R8A-2	AMD	AMPAL16R8L	
	TI	**PAL16R8A-2**	**725**
PAL16X4	National	PAL16X4	
PAL18H4	National	PAL18H4	
PAL18L14	National	PAL18L4	
PAL20C1	AMD	AMPAL22V10	
	National	PAL20C1	
PAL20H2	National	PAL20H2	
PAL20L10	Cypress	PAL20L10	
	National	PAL20L10	
PAL20L2	AMD	AMPAL22V10	
	National	PAL20L2	
PAL20L8	Cypress	PAL20L8	
	Fairchild	F100165	
	Hitachi	HD100165	
	Signetics	**100165**	**1173,1174**
PAL20R4	Cypress	PAL20R4	
	Fairchild	F100179	
PAL20R6	Cypress	PAL20R6	
	Fairchild	F100170	
	Hitachi	HD100170	
	Signetics	**100170**	**1173,1174**
PAL20R8	Cypress	PAL20R8	
	Fairchild	F100166	
	Hitachi	HD100166	
PAL20X10	AMD	AMPAL22V10	
	National	PAL20X10	
PAL20X4	AMD	AMPAL22V10	
	National	PAL20X4	
PAL20X8	AMD	AMPAL22V10	
	National	PAL20X8	
PAL26L6	AMD	AMPAL22V10	
	National	PAL26L6	
SN54556	LogicDev	LMU18	
	MMI	SN74556	
SN54557	AMD	AM25S557	
	LogicDev	LMU557	
	MMI	SN74557	
		SN74S557	**1103**
SN54558	AMD	AM25S557	
		AM25S558	
	Fairchild	74F558	
	LogicDev	LMU558	
	MMI	74S558	
		SN74558	
SN54LS240	**Fairchild**	**54LS240**	**608,613,621,623**
	Motorola	**SN54LS240**	**1124**
	SGS	T54LS240	
	TI	SN54LS240	
SN54LS241	**Fairchild**	**54LS241**	**613**
	Motorola	**SN54LS241**	**1124**
	SGS	T54LS241	
	TI	SN54LS241	
SN54LS244	**Fairchild**	**54LS244**	**613**
	Motorola	**SN54LS244**	**1124**
	SGS	T54LS244	
	TI	SN54LS244	
SN54LS245	**Fairchild**	**54LS245**	**613**
	Motorola	**SN54LS245**	**1124**
	National	DM54LS245	
	Signetics	54LS245	
	TI	SN54LS245	
SN54LS273	**Fairchild**	**54LS273**	**614**
	Motorola	**SN54LS273**	**1126**
	SGS	T54LS273	
	Signetics	54LS273	
	TI	**SN54LS273**	**715**
SN54LS373	**Motorola**	**SN54LS373**	**1126**
	SGS	T54LS373	
	Signetics	54LS373	
	TI	**SN54LS373**	**715**
SN54LS374	**Fairchild**	**54LS374**	**614**
	Motorola	**SN54LS374**	**1126**
	National	DM54LS374	
	SGS	T54LS374	
	TI	**SN54LS374**	**715**
SN54LS377	**Fairchild**	**54LS377**	**614**
	Motorola	**SN54LS377**	**1126**
	SGS	T54LS377	
	Signetics	54LS377	
	TI	**SN54LS377**	**715**
SN54LS645	**Motorola**	**SN54LS645**	**1125**
	TI	**SN54LS645**	**716**
SN54S182	**TI**	**SN54S182**	**716**
SN54S373	**TI**	**SN54S373**	**716**
SN54S374	**TI**	**SN54S374**	**716**
SN54S381	**TI**	**SN54S381**	**716**
SN74556	LogicDev	LMU18	
	MMI	SN54556	
SN74557	AMD	AM25S557	
	LogicDev	LMU557	
	MMI	SN54557	
		SN74S557	**1103**
SN74558	AMD	AM25S557	
		AM25S558	
	Fairchild	74F558	
	LogicDev	LMU558	
	MMI	74S558	
		SN54558	
SN74LS240	**Fairchild**	**74LS240**	**5311**
	Hitachi	HD74LS240	
	Motorola	**SN74LS240**	**1124**
	Panasonic	DN74LS240	
	SGS	T74LS240	
	Signetics	**74LS240**	**1157**
	TI	SN74LS240	
SN74LS241	**Fairchild**	**74LS241**	**5311**
	Hitachi	HD74LS241	
	Motorola	**SN74LS241**	**1124**
	Panasonic	DN74LS241	
	SGS	T74LS241	
	Signetics	**74LS241**	**1157**
	TI	SN74LS241	
SN74LS244	**Fairchild**	**74LS244**	**5311**
	Hitachi	HD74LS244	
	Motorola	**SN74LS244**	**1124**
	Panasonic	DN74LS244	
	SGS	T74LS244	
	Signetics	**74LS244**	**1158**
	TI	SN74LS244	
SN74LS273	**Fairchild**	**74LS273**	**5311**
	Motorola	**SN74LS273**	**1126**
	SGS	T74LS273	
	Signetics	74LS273	
	TI	SN74LS273	
SN74LS373	**Fairchild**	**74LS373**	**5311**
	Motorola	**SN74LS373**	**1126**
	Panasonic	DN74LS373	
	SGS	T74LS373	
	Signetics	**74LS373**	**1158**
	TI	SN74LS373	
SN74LS374	**Fairchild**	**74LS374**	**5311**
	Motorola	**SN74LS374**	**1126**
	National	DM74LS374	
	SGS	T74LS374	
	Signetics	**74LS374**	**1158**
	TI	SN74LS374	
SN74LS377	**Fairchild**	**74LS377**	**5311**
	Motorola	**SN74LS377**	**1126**
	SGS	T74LS377	
	Signetics	**74LS377**	**1158**
	TI	SN74LS377	
SN74LS645	**Motorola**	**SN74LS645**	**1125**
	Signetics	**74LS645**	**1159**
	TI	SN74LS645	
SN74S182	Fairchild	74S182	
	National	DM74S182	
	Signetics	**74S182**	**1157**
	TI	SN74S182	
SN74S244	TI	SN74S244	
SN74S373	**Signetics**	**74S373**	**1158**
	TI	SN74S373	
SN74S374	**Signetics**	**74S374**	**1158**
	TI	SN74S374	

◆ Discontinued

The manufacturers report their devices can be used as direct replacements.
Performance details often differ, so compare the specifications considering your requirements.

Monolithic Memories, Inc. (Cont'd)

Manufacturer Device	Replacement Source	Device	IC Master Page
SN74S557	AMD	AM25S557	
	LogicDev	LMU557	
	MMI	SN54557	
		SN74557	

Mostek

Manufacturer Device	Replacement Source	Device	IC Master Page
5087	TI	TCM5087	
5089	TI	TCM5089	
GA1000D	**GouldAMI**	**GA1000D**	**4632,4632**
GA2000D	**GouldAMI**	**GA2000D**	**4632,4632**
GA3000D	**GouldAMI**	**GA3000D**	**4632**
GA4000D	**GouldAMI**	**GA4000D**	**4632**
MK0808	National	ADC0808	
	TI	**ADC0808**	**720**
MK1002	AMD	AM1002	
◆MK2716	Hitachi	HN462716	
	National	MM2716	
	OKI	MSM2716	
	SGS	M2716	
	ThomsonCSF	ET2716	
MK2870	Telefunken	U3870	
MK36000	AMD	9264	
	GI	R03-9364	
	GouldAMI	S68A364	
	Hitachi	HN48364	
	Intech	IM7364	
	MicroPwr	MP2364C	
	Mitsubishi	M58334	
	Motorola	**MCM68364**	**4120**
		MCM68365	**4120**
		MCM68366	**4120**
	National	MM52164	
	NEC	UPD2364	
	Rockwell	R2364A	
	SGS	M2362	
		M36000	
	Signetics	2664	
		26S64	
	SSS	SCM23C64	
	SMC	ROM36000	
	Synertek	SY2364/A	
	TI	TMS4764	
	Toshiba	TMM2366	
MK37000	AMD	AM9265	
	Fairchild	F3568	
		F3569	
		F3570	
	GI	R03-9365	
		R09864	
	GouldAMI	S2364	
		S6364	
	GTEMicro	G5364	
	Hitachi	HN61364	
	Intel	2364A	
	Mitsubishi	M5M2364	
		M5M2365	
		M5M23C64	
	Motorola	MCM68369	
		MCM68370	
	National	MM52264	
		NM52264	
	OKI	**MSM3864**	**4733**
	Panasonic	MN2364	
		MN4864	
	RCA	**CDM5365**	**1673,1677**
	Rockwell	R2364B	
	SSS	SCM23C65	
	Supertex	23SC64	
		23SC64/A	
		CM6400	
	Synertek	SY2365/A	
	TI	TMS2364	
		TMS4764	
	Toshiba	TMM2365	
	UMC	UM2366	
	VTI	VT2365	
MK38000	AMD	AM92256	
	Fujitsu	MB83256	
	GI	R09256	
	GouldAMI	S23256	
		S38256	
	GTEMicro	G53256	
	Hitachi	HN613256	
	Mitsubishi	M5M23256	
	Motorola	MCM63256	
MK38000	Motorola	MCM65256	
	NCR	NCR23256	
		NCR23257	
	NEC	UPD23256	
		UPD23256A	
		UPD23C256E	
	OKI	**MSM38256**	**4733**
	Panasonic	MN23256	
		MN23257	
	RCA	CDM52356	
		CDM53256	**1673,1678**
	S-MOS	**SMM2326**	**4178**
		SMM6325	**4178**
		SMM6326	**4178**
	Signetics	23256	
		23256A	
	SSS	SCM23C256	
	Supertex	CM2560	
	Toshiba	**TMM23256**	**4263**
	UMC	UM23256	
	VTI	23257	
		VT23256	
		VT23257	
MK3850	Fairchild	3850	
MK3851	Fairchild	3851	
MK3852	Fairchild	3852	
MK3853	Fairchild	3853	
MK3854	Fairchild	3854	
MK3861	Fairchild	3861	
MK3870	Fairchild	F3870	
	SGS	M3870	
◆MK3872	Fairchild	F3872	
	SGS	M3872	
MK3881	SGS	Z80-PIO	
		Z8420	
	Sharp	LH-0081	
	Zilog	Z80-PIO	
		Z8420	
MK3882	SGS	Z80-CTC	
		Z8430	
	Sharp	LH-0082	
	Zilog	Z80-CTC	
		Z8430	
MK3883	SGS	Z80-DMA	
		Z8410	
	Sharp	LH-0083	
	Zilog	Z80-DMA	
		Z8410	
MK3884	Mostek	MK3885	
		MK3887	
	SGS	Z80-SIO	
		Z8440	
		Z8441	
		Z8442	
	Sharp	LH-0084	
	Zilog	Z80-SIO	
		Z8440	
		Z8441	
		Z8442	
MK3885	Mostek	MK3884	
		MK3887	
	SGS	Z80-SIO	
		Z8440	
		Z8441	
		Z8442	
	Sharp	LH-0084	
	Zilog	Z80-SIO	
		Z8440	
		Z8441	
		Z8442	
MK3887	Mostek	MK3884	
		MK3885	
	SGS	Z80-SIO	
		Z8440	
		Z8441	
		Z8442	
	Sharp	LH-0084	
	Zilog	Z80-SIO	
		Z8440	
		Z8441	
		Z8442	
◆MK4007	Solitron	µA2556	
		µA2656	
		µA3556	
		µA3656	
◆MK4027	Fairchild	M4027	
MK4118	UMC	UM2158	
MK4516	**Fairchild**	**F100422**	**4014**
	Fujitsu	MB8118	
		MBM100422	
		MBM100422A	
MK4516	Hitachi	HM100422	
		HM4816	
	Intel	2118	
	Motorola	MCM4517	
	National	DM100422	
		NMC5295	
	NEC	UPB100422	
	Signetics	100422	
		GBX100422	
◆MK4564	Fairchild	F64K	
	Fujitsu	MB8264A	
		MB8266A	
	Hitachi	HM4864	
	Inmos	IMS2600	
	MicronTech	MT4264	
	Motorola	MCM4164B	
		MCM6665B	
	National	NMC4164	
	NEC	µPD4164	
	OKI	MSM3764	
	ThomsonCSF	ET4164	
	Toshiba	TMM4164	
	Samsung	KM4164	
MK4701	**Xicor**	**X2001**	**4277**
◆MK4802	AMD	AM9128	
		AM9218	
	Cypress	CY7C128	
	Fujitsu	MB8128	
		MB8416	
	Harris	HM6116	
		HM6516	
	IDT	IDT6116	
	Intel	2128	
	MicroPwr	MP6116	
	Mitsubishi	M58275	
		M5M116	
		M5M5116	
		M5M5117	
		M5M5118	
		MS8725	
	Motorola	MCM2016	
		MCM2016H	
		MCM2128	
		MCM6116	**4119**
		MCM61L16	**4119**
		MCM65116	
	National	MMC2116	
	NEC	µPD4016	
	OKI	MSM2128	
		MSM5128	**4732,4733**
	RCA	MWS6116A	
	SSS	883C21C16	
		BCM21C16	
		SCM21C16	
		SCM6116	
	TI	TMS4016	
	ThomsonCSF	ET2128	
	Toshiba	**TC5516A**	**4263**
		TMM2015A	
		TMM2016	
		TMM2016A	**4263**
	Samsung	KM6816	
	UMC	UM2128	
	Universal	US574HC133	
MK48Z02	**LMS**	**NVR2**	**4100**
◆MK5002	Micrel	MIC5002	
◆MK5005	Micrel	MIC5005	
◆MK5007	Micrel	MIC5007	
MK5009	Micrel	MIC5009	
MK50396	Micrel	MIC50396	
MK50397	Micrel	MIC50397	
MK50398	Micrel	MIC50398	
MK50399	Micrel	MIC50399	
MK50809	National	ADC0809	
	TI	ADC0809	
◆MK50816	Datel	DAS-952	
	National	ADC0816	
MK50817	National	ADC0817	
MK5094	National	TP5094	
MK50981	CTI	52981	
	National	TP50981	
	Samsung	MK50981	
MK50982	National	TP50982	
MK50992	Samsung	MK50992	
MK50993	Samsung	MK50993	
MK5116	Fairchild	5116	
	National	TP5116	
	SGS	M5116	
MK5117	Fairchild	5116-1	
MK5151	Fairchild	5151	
MK5156	CTI	MA556	
	Fairchild	5156	
	National	TP5156	
	SGS	M5156	
◆MK5912	GTEMicro	G8912B	
	Harris	**HC5512**	**3596**
	Intel	2912	
		ID2912	
	National	TP3040	
	Plessey	MV8912	
	SGS	M5912	
	TI	TCM2912B	
MK6116	Fujitsu	MB8416	
	Harris	HM65162	
	IDT	6116	
		IDT6116	
	Mitsubishi	5117	
	National	6116	
	NEC	µPD446	
	Nitron	NC6116	
	OKI	**MSM5128**	**4732,4733**
	RCA	CDM6116	
	S-MOS	SRM2016	
	Toshiba	**TC5517A**	**4263**
		TC5517B	
MK68000	Hitachi	HD68000	
	Motorola	MC68000	
	Rockwell	R68000	
	Signetics	**SCN68000**	**1720**
	ThomsonCSF	EF68000	
MK68008	ThomsonCSF	EF68008	
MK68010	**Motorola**	**MC68010**	**1654,1905,2109**
MK68200	Motorola	MC68200	
MK68230	Signetics	SCN68230	
	ThomsonCSF	EF68230	
MK68440	ThomsonCSF	EF68440	
MK68451	**Motorola**	**MC68451**	**1656**
MK68901	**Motorola**	**MC68901**	**1656**
MK8865	Mitel	MT8865	
	Plessey	MV8865	
◆MK8912	GTEMicro	G8912B	
	Harris	**HC5512**	**3596**
	Intel	2912	
		ID2912	
	National	TP3040	
	Plessey	MV8912	
	SGS	M5912	
	TI	TCM2912B	
◆MKB2716	Intel	M2716	
	National	MM2716M	
MKB4564	Intel	M2164A	
PBD3535	Samsung	PDB3535	

Motorola Semiconductor Products

Manufacturer Device	Replacement Source	Device	IC Master Page
6504	GouldAMI	6504	
	Harris	HM6504	
	Hitachi	4315	
		6147	
	Mitsubishi	58981	
	National	NMC6504	
	OKI	5104	
	RCA	CDM5104	
	Rockwell	R6504	
	Synertek	SY6504	
	Toshiba	TC5504	
6514	Harris	HM6514	
	Hitachi	6148	
		HM4334	
	Mitsubishi	58981	
	NEC	444	
	OKI	5114	
	RCA	MWS5514	
	Rockwell	R6514	
	Synertek	SY6514	
	Toshiba	TC5514	
6518	GouldAMI	6518	
	Harris	HM6518	
	MicroPwr	6518	
	National	MM74C930	
81LS97	National	DM74LS797	
81LS98	National	DM74LS798	
AM26LS31	AMD	AM26LS31	
	National	DS26LS31	
	TI	**AM26LS31**	**722**
CA3054	Fairchild	UA3054	
	National	LM3054	
	RCA	**CA3054**	**3678**

(Continued)

◆ Discontinued

Bold face device numbers indicate manufacturers data is provided in the IC Master on the pages noted.

Motorola Semiconductor Products (Cont'd)

Manufacturer Device	Replacement Source	Device	IC Master Page
CA3054	Sprague	ULN-2054	
	ThomsonCSF	SFC2054	
CA3059	RCA	CA3059	
CA3079	RCA	CA3079	
DAC-08	AMD	AM1408	
		DAC-08	
		SSS1408	
	AD	AD1408	
		ADDAC-08	
	Datel	DAC-08B	
		DAC-I8BC	
		DAC-IC8B	
		DAC-IC8BC	**3162**
	Fairchild	DAC-08	
		MA0802M	
		μA0801	
		μA0802	
	Hitachi	HA17408	
	Motorola	MC1408	
	National	DAC0801	
		DAC0802	
		DAC0806	
		DAC0807	
		DAC0808	
	NEC	μPC624	
	PMI	**DAC-08**	**3637,3639**
		DAC-1408	
	Raytheon	**DAC-08**	**3664**
	Signetics	MC1408	
DC26S10	AMD	AM26S10	
	National	DS26S10	
	TI	AM26S10	
◆DS8641	National	DS8641	
HCA6306	**LSILogic**	**LL5080**	**4676**
	National	SCX6306	
	RCA	PAS0800	
	Toshiba	**TC15G008**	**4799**
HCA6312	**LSILogic**	**LL5140**	**4676**
	National	SCX6312	
	RCA	**PA51400**	**4742**
	Toshiba	**TC15G014**	**4799**
HCA6324	**LSILogic**	**LL5220**	**4676**
	National	SCX6324	
		SCX6325	
	RCA	**PA52200**	**4742**
	Toshiba	**TC15G022**	**4799**
HCA6348	**LSILogic**	**LL5420**	**4676**
	National	SCX6348	
	RCA	**PA54200**	**4742**
	Toshiba	**TC15G042**	**4799**
◆LF255	MicroPwr	MP255	
	National	LF255	
	PMI	PM255	
	ThomsonCSF	TDE0155	
◆LF256	National	LF256	
	ThomsonCSF	TDE0156	
LF355	LinearTech	LF355	
	National	LF355	
	PMI	PM355	
	ThomsonCSF	LF355	
LF355A	AMD	LF355A	
	LinearTech	LF355A	
	National	LF355A	
	PMI	PM355A	
LF356	LinearTech	LF356	
	National	LF356	
	PMI	PM356	
	ThomsonCSF	LF356	
LF356A	AMD	LF356A	
	Burr-Brown	**OPA356A**	**3149,3150**
	LinearTech	LF356A	
	National	LF356A	
	PMI	PM356A	
LM101	AMD	LM101	
	AD	AD101	
	Fairchild	μA101	
	Intersil	AD101	
	LinearTech	LM101	
	Raytheon	LM101	
	SiliconG	SG101	
	ThomsonCSF	LM101	
◆LM104	National	LM104	
	SiliconG	SG104	
	ThomsonCSF	LM104	
◆LM105	AMD	LM105	
	Fairchild	μA105	
	Intersil	LM105	
	National	LM105	
			(Continued)
◆LM105	SiliconG	SG105	
	ThomsonCSF	LM105	
◆LM107	AMD	LM107	
	AD	**AD741S**	**3507**
	Burr-Brown	3500	
	LinearTech	LM107	
	National	LH741A	
		LM107	
	PMI	PM741	
	Raytheon	RC741	
	SiliconG	SG107	
	TI	**LM107**	**718**
	ThomsonCSF	LM107	
LM108	AD	AD108	
	Fairchild	μA108	
	Harris	LM108	
	Intersil	**LM108**	**3600,3601**
	LinearTech	LM108	
	MicroPwr	**MP108**	**688,3607**
	National	LM108	
	PMI	PM108	
	SGS	M108	
	SiliconSys	**SSI108**	**3736**
	TI	LM108	
LM108A	AMD	LM108A	
	AD	AD108A	
	Fairchild	UA108A	
	Harris	LM108A	
	LinearTech	LM108A	
	MicroPwr	**MP108A**	**688,3607**
	PMI	PM108A	
LM109	Fairchild	μA109	
	IPS	**IP140-5**	**3599**
	National	LM109	
	SiliconG	SG109	
	ThomsonCSF	SFC2109	
LM11	LinearTech	LM11	
	National	LM11	
LM111	AD	AD111	
	Fairchild	μA111	
	LinearTech	LM111	
	National	LM111	
	Raytheon	LM111	
	Signetics	**LM111**	**3725**
	SiliconG	SG111	
	TI	**LM111**	**719**
	ThomsonCSF	LM111	
◆LM112	AMD	LM112	
	National	LM112	
LM117	Fairchild	μA117	
	IPS	**IP117**	**3599**
	LinearTech	LM117	
	MCE	MCE-LM117	
	SiliconG	SG117	
	TI	LM117	
	ThomsonCSF	LM117	
		TDC0117	
	Unitrode	UC117	
LM117A	National	LM117A	
LM123	Fairchild	SH123	
		UA138	
		μA123	
	IPS	**IP123**	**3599**
	LinearTech	LM123	
	Motorola	**MC78T05**	**3622**
	National	LM123	
	SiliconG	SG123	
LM124A	AMD	LM124A	
	LinearTech	LT1014	
	National	LM124A	
	RCA	CA124A	
	Signetics	LM124A	
	SiliconG	SG124	
	TI	LM124A	
LM137	**IPS**	**IP137**	**3599**
	LinearTech	LM137	
	MCE	MCE-LM137	
	National	LM137	
	ThomsonCSF	LM137	
		TDC0137	
	Unitrode	UC137	
LM139	Fairchild	μA139	
	National	LM139	
	PMI	CMP-04	
		PM139	
	Raytheon	LM139	
	RCA	**CA139**	**3672,3677**
	Signetics	LM139	
	TI	**LM139**	**719**
LM139A	AMD	LM139A	
	National	LM139A	
	PMI	CMP-04	
			(Continued)
LM139A	PMI	PM139A	
	RCA	**CA139A**	**3672,3677**
	TI	**LM139A**	**719**
LM150	**IPS**	**IP150**	**3599**
	LinearTech	LM150	
	National	LM150	
	SiliconG	SG150	
	Unitrode	UC150	
LM158	LinearTech	LT1013	
	National	LM158A	
	Raytheon	RM4139	
	RCA	**CA158A**	**3672**
	Signetics	**LM158**	**3729**
	TI	**LM158**	**718**
◆LM185	LinearTech	LM185	
	National	LM185	
LM193	National	LM193A	
	Signetics	**LM193**	**3725**
	TI	**LM193**	**719**
◆LM204	National	LM204	
	SiliconG	SG204	
	ThomsonCSF	LM204	
LM208A	AMD	LM208A	
	AD	AD208A	
	Fairchild	UA208A	
	MicroPwr	**MP208A**	**3607**
	National	LM208A	
	PMI	PM208A	
		PM308A	
LM211	AD	AD211	
	National	LM211	
	RCA	LM211	
	Signetics	**LM211**	**3725**
	SiliconG	SG211	
	TI	LM211	
	ThomsonCSF	LM211	
LM217	**IPS**	**IP217**	**3599**
	MCE	MCE-LM217	
	National	LM217	
	SiliconG	SG217	
	TI	LM217	
	ThomsonCSF	TDE0117	
	Unitrode	UC217	
LM223	Fairchild	SH223	
		μA223	
	IPS	**IP223**	**3599**
	Lambda	LLM223	
	National	LM223	
	SiliconG	SG223	
	ThomsonCSF	TDE0123	
LM237	**IPS**	**IP237**	**3599**
	MCE	MCE-LM237	
	National	LM237	
	TI	LM237	
	Unitrode	UC237	
LM239	Fairchild	UA250	
		UA26LS31	
		UA26LS32	
		μA239	
	National	LM239	
	PMI	CMP-04	
		PM239	
	Raytheon	LM239	
	RCA	**CA239**	**3672,3677**
	Signetics	LM239	
	TI	LM239	
	ThomsonCSF	TDE0139	
LM239A	AMD	LM239A	
	National	LM239A	
	PMI	CMP-04	
	RCA	**CA239A**	**3672,3677**
LM250	**IPS**	**IP250**	**3599**
	National	LM250	
	SiliconG	SG250	
	Unitrode	UC250	
LM258	National	LM258A	
	RCA	**CA258A**	**3672**
	Signetics	**LM258**	**3729**
	TI	LM258	
	ThomsonCSF	TDE0158	
LM285	National	LM285	
LM2900	Hitachi	HA17301	
	Motorola	**MC3301**	**3618**
	National	LM2900	
		LM3301	
	Raytheon	LM2900	
		RC3301	
	TI	LM2900	
LM2901	Cypress	CY7C901	
	Fairchild	μA2901	
		μA3302	
	Motorola	**MC3302**	**3631**
			(Continued)
LM2901	National	LM2901	
		LM3302	
	NEC	μPC2901	
	PMI	CMP-04	
	Raytheon	LM2901	
		RC3302	
	RCA	CA3302	
	SGS	LM2901	
		MC3302	
	Signetics	**LM2901**	**3721,3722**
		MC3302	**3721**
	SiliconG	SG324A	
	TI	LM2901	
		LM3302	
	ThomsonCSF	LM2901	
LM2902	Fairchild	μA2902	
	Hitachi	HA17902	
	National	LM2902	
	NEC	μPC2902	
	Raytheon	LM2902	
	SGS	LM2902	
	TI	LM2902	
	ThomsonCSF	LM2902	
LM2903	AD	AD311	
	Fairchild	μA311	
	LinearTech	LM311	
	Motorola	**LM311**	**3631**
	National	LM2903	
		LM311	
	NEC	μPC271	
		μPC311	
	Raytheon	LM311	
	RCA	**CA311**	**3672,3677**
		LM311	
	SGS	LM2903	
		LM311	
	Signetics	**LM2903**	**3725**
		LM311	**3721**
	SiliconG	SG311	
	TI	LM2903	
		LM311	
	ThomsonCSF	LM2903	
		LM311	
		SFC3111	
LM2904	RCA	CA2904	
	TI	LM2904	
	ThomsonCSF	LM2904	
LM293	National	LM293	
	Signetics	LM293	
	TI	LM293	
LM301	AD	AD301	
	Fairchild	μA301A	
	Intersil	AD301	
	LinearTech	LM301	
		LM301A	
	National	LM301	
		LM301A	
	NEC	μPC157	
		μPC301	
	Raytheon	LM301	
	RCA	CA301	
		LM301	
	SiliconG	SG301	
	TI	LM301	
		LM301A	
	ThomsonCSF	LM301A	
	Toshiba	TA7506	
◆LM304	National	LM304	
	NEC	μPC142	
	SiliconG	SG304	
	ThomsonCSF	LM304	
LM3065	Motorola	M5140	
	National	LM3064	
	RCA	CA3065	
	Sanyo	LA1365	
	TI	SN76666	
LM308	AD	AD308	
	Burr-Brown	3500	
		3501	
	Fairchild	μA308	
	Intersil	AD308	
		LM308	**3600,3601**
	MicroPwr	**MP308**	**3607**
	National	LM308	
	Raytheon	LM308	
LM308A	AMD	LM308A	
	AD	AD308A	
	Fairchild	UA308A	
	Harris	LM308A	
	LinearTech	LM308A	
	MicroPwr	**MP308A**	**3607**
	National	LM308A	

◆ Discontinued

The manufacturers report their devices can be used as direct replacements.
Performance details often differ, so compare the specifications considering your requirements.

Motorola Semiconductor Products (Cont'd)

Manufacturer Device	Replacement Source	Device	IC Master Page
LM311	AD	AD311	
	Fairchild	μA311	
	LinearTech	LM311	
	Motorola	**LM2903**	**3631**
	National	LM2903	
		LM311	
	NEC	μPC271	
		μPC311	
	Raytheon	LM311	
	RCA	**CA311**	**3672,3677**
		LM311	
	SGS	LM2903	
		LM311	
	Signetics	**LM2903**	**3725**
		LM311	**3721**
	SiliconG	SG311	
	TI	LM2903	
		LM311	
	ThomsonCSF	LM2903	
		LM311	
		SFC3111	
LM317	Fairchild	μA317	
	IPS	**IP317**	**3599**
	LinearTech	LM317	
	MCE	MCE-LM317	
	National	LM317	
	SGS	LM317	
	SiliconG	SG317	
	TI	LM317	
	ThomsonCSF	LM317	
		TDB0117	
	Unitrode	UC317	
LM317M	National	LM317M	
LM323	Fairchild	SH0323	
		SH323	
		μA323	
		μA78H05	
	IPS	IP123-5	
		IP323	**3599**
	Lambda	LAS1405	
		LAS1905	
	LinearTech	LM323	
	Micropac	M78H05	
	Motorola	**MC78T05C**	**3622**
	SiliconG	SG323	
	ThomsonCSF	LM323	
LM337	**IPS**	**IP337**	**3599**
	LinearTech	LM337	
	MCE	MCE-LM337	
	National	LM337	
	SiliconG	SG337	
	TI	LM337	
	ThomsonCSF	TDB0137	
	Unitrode	UC337	
LM339	AMD	LM339A	
	Fairchild	μA339	
	Hitachi	HA17901	
	National	LM339	
	NEC	μPC339	
	PMI	CMP-04	
		PM339A	
	Raytheon	LM339	
	RCA	**CA339**	**3672,3677**
		CA339A	**3672,3677**
		LM339	
	SGS	LM339	
	TI	LM339	
	ThomsonCSF	LM339	
		TDB0139	
LM350	Fairchild	μA78HGA	
	IPS	**IP350**	**3599**
	Lambda	LAS14U	
		LAS19U	
	LinearTech	LM350	
	National	LM350	
	SiliconG	SG350	
	TI	LM350	
LM358	National	LM358A	
	NEC	μPC358	
	RCA	**CA358A**	**3672**
		LM358	
	Sanyo	LA6358	
	SGS	LM358	
	Signetics	**LM358**	**3722,3729**
		NE532	**3729**
	TI	LM358	
	ThomsonCSF	LM358	
LM385	LinearTech	LM385	
	National	LM385	
LM393	Sanyo	LA6393	
	Signetics	LM393	
	TI	LM393	
M5140	Motorola	LM3065	
	National	LM3064	
	RCA	CA3065	
	Sanyo	LA1365	
	TI	SN76666	
M5L2114	AMD	AM9114	
	Fairchild	F2114	
	Hitachi	HM472114	
	Intel	2114	
		2114A	
	Mitsubishi	M5L2114	
	Motorola	MCM2114	
		MCM21L14	
	National	NMC2114A	
	OKI	MSM2114	
	SSS	SCM2114A	
		SCM21C14	
	Synertek	SY2114	
	Toshiba	TMM2114A	
		TMM314A	
	UMC	UM2114	
◆MC10000	Fairchild	F10000	
MC10100	Fairchild	F10100	
	Signetics	**10100**	**1173,1174**
MC10101	Fairchild	F10101	
	Hitachi	HD10101	
	Signetics	**10101**	**1173,1174**
MC10102	Fairchild	F10102	
	Hitachi	HD10102	
	Signetics	**10102**	**1173,1174**
MC10103	Fairchild	F10103	
	Signetics	**10103**	**1173,1174**
MC10104	Fairchild	F10104	
	Hitachi	HD10104	
	Signetics	**10104**	**1173,1174**
MC10105	Fairchild	F10105	
	Hitachi	HD10105	
	Signetics	**10105**	**1173,1174**
MC10106	Fairchild	F10106	
	Hitachi	HD10106	
	Signetics	**10106**	**1173,1174**
MC10107	Fairchild	F10107	
	Hitachi	HD10107	
	Signetics	**10107**	**1173,1174**
MC10109	Fairchild	F10109	
	Hitachi	HD10109	
	Signetics	**10109**	**1173,1174**
MC10110	Fairchild	F10110	
	Hitachi	HD10110	
	Signetics	**10110**	**1173,1174**
MC10111	Fairchild	F10111	
	Hitachi	HD10111	
	Signetics	**10111**	**1173,1174**
MC10113	Fairchild	F10113	
	Signetics	**10113**	**1173,1174**
MC10114	Fairchild	F10114	
	Signetics	**10114**	**1173,1174**
MC10115	Fairchild	F10115	
	Signetics	**10115**	**1173,1174**
MC10116	Fairchild	F10116	
	Hitachi	HD10116	
	National	DM10116	
	Signetics	**10116**	**1173,1174**
MC10117	Fairchild	F10117	
	Hitachi	HD10117	
	Signetics	**10117**	**1173,1174**
MC10118	Fairchild	F10118	
	Hitachi	HD10118	
	Signetics	**10118**	**1173,1174**
MC10119	Fairchild	F10119	
	Hitachi	HD10119	
	Signetics	**10119**	**1173,1174**
MC10121	Fairchild	F10121	
	Hitachi	HD10121	
	Signetics	**10121**	**1173,1174**
MC10123	Fairchild	F10123	
	Signetics	**10123**	**1173,1174**
MC10124	Fairchild	F10124	
	Hitachi	HD10124	
	Signetics	**10124**	**1173,1174**
MC10125	Fairchild	F10125	
	Hitachi	HD10125	
	Signetics	**10125**	**1173,1174**
MC10128	Signetics	10128	
MC10129	**Signetics**	**10129**	**1173,1174**
MC10130	Fairchild	F10130	
	Hitachi	HD10130	
	Signetics	**10130**	**1173,1174**
MC10131	Fairchild	F10131	
	Hitachi	HD10131	
	Signetics	**10131**	**1173,1174**
MC10132	Fairchild	F10132	
	Hitachi	HD10132	
	Signetics	**10132**	**1173,1174**
MC10133	Fairchild	F10133	
	Hitachi	HD10133	
	Signetics	**10133**	**1173,1174**
MC10134	Fairchild	F10134	
	Hitachi	HD10134	
	Signetics	**10134**	**1173,1174**
MC10135	Fairchild	F10135	
	Signetics	**10135**	**1173,1174**
MC10136	Fairchild	F10136	
	Hitachi	HD10136	
	Signetics	**10136**	**1173,1174**
MC10137	Fairchild	F10137	
	Signetics	**10137**	**1173,1174**
MC10138	Signetics	10138	
MC10141	Fairchild	F10141	
	Signetics	**10141**	**1173,1174**
MC10158	Fairchild	F10158	
	Signetics	**10158**	**1173,1174**
MC10159	Fairchild	F10159	
	Signetics	**10159**	**1173,1174**
MC10160	Fairchild	F10160	
	Hitachi	HD10160	
	Signetics	**10160**	**1173,1174**
MC10161	Fairchild	F10161	
	Hitachi	HD10161	
	Signetics	**10161**	**1173,1174**
MC10162	Fairchild	F10162	
	Hitachi	HD10162	
	Signetics	**10162**	**1173,1174**
MC10164	Fairchild	F10164	
	Hitachi	HD10164	
	Signetics	**10164**	**1173,1174**
	TI	SN10164	
MC10165	Fairchild	F10165	
	Hitachi	HD10165	
	Signetics	**10165**	**1173,1174**
MC10168	Fairchild	F10168	
MC10170	Signetics	10170	
MC10171	Fairchild	F10171	
	Signetics	**10171**	**1173,1174**
MC10172	Fairchild	F10172	
	Signetics	**10172**	**1173,1174**
MC10173	Fairchild	F10173	
	Signetics	**10173**	**1173,1174**
MC10174	Fairchild	F10174	
	Hitachi	HD10174	
	Signetics	**10174**	**1173,1174**
	TI	SN10174	
MC10175	Fairchild	F10175	
	Hitachi	HD10175	
	Signetics	**10175**	**1173,1174**
MC10176	Fairchild	F10176	
	Signetics	**10176**	**1173,1174**
MC10177	Fairchild	F10177	
MC10178	Fairchild	F10178	
	Signetics	10178	
MC10179	Fairchild	F10179	
	Hitachi	HD10179	
	Signetics	**10179**	**1173,1174**
MC10180	Fairchild	F10180	
	Hitachi	HD10180	
	Signetics	**10180**	**1173,1174**
MC10181	Fairchild	F10181	
	Hitachi	HD10181	
	Signetics	**10181**	**1173,1174**
MC10186	Fairchild	F10186	
	Signetics	10186	
MC10188	**Signetics**	**10188**	**1173,1174**
MC10189	**Signetics**	**10189**	**1173,1174**
MC10190	Signetics	10190	
MC10191	Signetics	10191	
MC10192	Fairchild	F10192	
	Signetics	**10192**	**1173,1174**
MC10195	Signetics	10195	
MC10210	Fairchild	F10210	
	Signetics	**10210**	**1173,1174**
MC10211	Fairchild	F10211	
	Signetics	**10211**	**1173,1174**
MC10212	Fairchild	F10212	
	Signetics	10212	
MC10216	Fairchild	F10216	
	Signetics	**10216**	**1173,1174**
MC10231	Fairchild	F10231	
	Signetics	**10231**	**1173,1174**
MC10501	**Fairchild**	**F10501**	**615**
MC10502	**Fairchild**	**F10502**	**615**
MC10504	**Fairchild**	**F10504**	**615**
MC10514	**Fairchild**	**F10514**	**615**
MC10515	**Fairchild**	**F10515**	**615**
MC10516	**Fairchild**	**F10516**	**615**
MC10524	**Fairchild**	**F10524**	**615**
MC10525	**Fairchild**	**F10525**	**615**
MC10535	**Fairchild**	**F10535**	**615**
MC10558	**Fairchild**	**F10558**	**615**
MC10562	**Fairchild**	**F10562**	**615**
MC10H101	**MMI**	**MC10H101**	**1105**
MC10H102	**MMI**	**MC10H102**	**1105**
MC10H103	**MMI**	**MC10H103**	**1105**
MC10H104	**MMI**	**MC10H104**	**1105**
MC10H105	**MMI**	**MC10H105**	**1105**
MC10H107	**MMI**	**MC10H107**	**1105**
MC10H125	**MMI**	**MC10H125**	**1105**
MC10H130	**MMI**	**MC10H130**	**1105**
MC10H131	**MMI**	**MC10H131**	**1105**
MC10H141	**MMI**	**MC10H141**	**1105**
MC10H145	Fairchild	F10402	
MC10H158	**MMI**	**MC10H158**	**1105**
MC10H159	**MMI**	**MC10H159**	**1105**
MC10H160	**MMI**	**MC10H160**	**1105**
MC10H164	**MMI**	**MC10H164**	**1105**
MC10H173	**MMI**	**MC10H173**	**1105**
MC10H175	**MMI**	**MC10H175**	**1105**
MC10H210	**MMI**	**MC10H210**	**1105**
MC10H211	**MMI**	**MC10H211**	**1105**
MC12015	National	DS8615	
◆MC12016	National	DS8616	
	Plessey	SP8793	
MC12017	National	DS8617	
MC12071	National	DS8621	
MC1309	Fairchild	μA705	
	Motorola	MC1311	
	National	LM1800	
	RCA	CA3145	
		CA3195	
	Sanyo	LA705	
		LA758	
	Signetics	**μA758**	**3727**
	Sprague	ULN-3809	
		ULN-3812	
	TI	SN76111	
		SN76116	
◆MC1310	Fairchild	μA705	
	Motorola	**MC1309**	**3614**
		MC1311	
	National	LM1800	
	RCA	CA3145	
		CA3195	
	Sanyo	LA705	
		LA758	
	Signetics	**μA758**	**3727**
	Sprague	ULN-3809	
		ULN-3812	
	TI	SN76111	
		SN76116	
MC1311	Fairchild	μA705	
	Motorola	**MC1309**	**3614**
	National	LM1800	
	RCA	CA3145	
		CA3195	
	Sanyo	LA705	
		LA758	
	Signetics	**μA758**	**3727**
	Sprague	ULN-3809	
		ULN-3812	
	TI	SN76111	
		SN76116	
MC1327	Motorola	TDA1327	
	TI	SN76227	
◆MC1330	TI	SN76530	
◆MC1344	Fairchild	μA705	
	Motorola	**MC1309**	**3614**
		MC1311	
	National	LM1800	
	RCA	CA3145	
		CA3195	
	Sanyo	LA705	
		LA758	
	Signetics	**μA758**	**3727**
	Sprague	ULN-3809	
		ULN-3812	
	TI	SN76111	
		SN76116	
MC1350	TI	SN76600	
	ThomsonCSF	ESM1350	
MC1352	Sanyo	LA1352	
MC1357	National	LM2111	
		LM2113	
	RCA	CA2111	

(Continued)

◆ Discontinued

Bold face device numbers indicate manufacturers data is provided in the IC Master on the pages noted.

Motorola Semiconductor Products (Cont'd)

Manufacturer Device	Replacement Source	Device	IC Master Page
MC1357	Signetics	N5111	
	Sprague	ULN-2111	
	TI	SN76642	
		SN76643	
◆MC1358	Motorola	LM3065	
		M5140	
	National	LM3064	
	RCA	CA3065	
	Sanyo	LA1365	
	TI	SN76666	
◆MC1384	Fairchild	TBA810	
	SGS	TBA810	
	Telefunken	TDA810	
MC1391	National	LM1391	
	RCA	CA1391	
MC1394	National	LM1394	
	RCA	CA1394	
MC14000	National	CD4000	
	RCA	CD4000	
	SGS	HCC/HCF4000	
	Signetics	HEF400	
	Solitron	CM4000	
	SSS	SCL4000	
MC14001	Fairchild	F4001	
	National	CD4001	
		MM74C02	
	OKI	MSM4001	
	RCA	CD4001	
	Sanyo	LC4001B	
	SGS	HCC/HCF4001	
	Signetics	HEF4001	
	Solitron	CM4001	
	SSS	SCL4001	
	Toshiba	TC4001	
MC14002	Fairchild	F4002	
	National	CD4002	
	RCA	CD4002	
	SGS	HCC/HCF4002	
	Signetics	HEF4002	
	Solitron	CM4002	
	SSS	SCL4002	
	Toshiba	TC4002	
MC14006B	Fairchild	F4006B	
	National	CD4006	
	RCA	**CD4006B**	**704**
MC14007	Fairchild	F4007	
	National	CD4007	
	RCA	CD4007	
	SGS	HCC/HCF4007	
	Signetics	HEF4007	
	Solitron	CM4007	
	SSS	SCL4007	
	Toshiba	TC4007	
MC14008	Fairchild	F4008	
	National	CD4008	
		MM74C83	
	RCA	CD4008	
	SGS	HCC/HCF4008	
	Signetics	HEF4008	
	Solitron	CM4008	
	SSS	SCL4008	
	Toshiba	TC4008	
MC1400AG10	AD	AD581	
	Harris	HA1608	
	LinearTech	LTREF01	
		REF-01A	
	Maxim	REF01	
	MicroPwr	MP5531	
		MPREF01	
	Motorola	MC1400AU10	
		MC1500AU10	
	PMI	REF-01AZ	
		REF01	
	Raytheon	**REF-01**	**3652**
		REF01	
	TeledyneS	TSC9495	
MC1400AU10	AD	AD581	
	Harris	HA1608	
	LinearTech	LTREF01	
		REF-01A	
	Maxim	REF01	
	MicroPwr	MP5531	
		MPREF01	
	Motorola	MC1400AG10	
		MC1500AU10	
	PMI	REF-01AZ	
		REF01	
	Raytheon	**REF-01**	**3652**
MC1400AU10	Raytheon	REF01	
	TeledyneS	TSC9495	
MC1400AU5	LinearTech	LTREF02	
		REF-02E	
	Maxim	REF02	
	MicroPwr	MP5532	
	Motorola	MC1500AU5	
	PMI	REF-02EZ	
		REF02	
	Raytheon	REF02	
	TeledyneS	TSC9496	
MC14011	Fairchild	F4011	
	National	CD4011	
		MM74C00	
	OKI	MSM4011	
	RCA	CD4011	
	Sanyo	LC4011	
	SGS	HCC/HCF4011	
	Signetics	HEF4011	
	Solitron	CM4011	
	SSS	SCL4011	
	Toshiba	TC4011	
MC14012	Fairchild	F4012	
	National	CD4012	
	RCA	CD4012	
	SGS	HCC/HCF4012	
	Signetics	HEF4012	
	Solitron	CM4012	
	SSS	SCL4012	
	Toshiba	TC4012	
MC14013	Fairchild	F4013	
	National	CD4013	
		MM74C74	
	OKI	MSM4013	
	RCA	CD4013	
	Sanyo	LC4013	
	SGS	HCC/HCF4013	
	Signetics	HEF4013	
	Solitron	CM4013	
	SSS	SCL4013	
	Toshiba	TC4013	
MC14014	Fairchild	F4014	
	National	CD4014	
	RCA	CD4014	
	SGS	HCC/HCF4014	
	Signetics	HEF4014	
	Solitron	CM4014	
	SSS	SCL4014	
	Toshiba	TC4014	
MC14015	Fairchild	F4015	
	National	CD4015	
		MM74C164	
	OKI	MSM4015	
	RCA	CD4015	
	Sanyo	LC4015	
	SGS	HCC/HCF4015	
	Signetics	HEF4015	
	Solitron	CM4015	
	SSS	SCL4015	
	Toshiba	TC4015	
MC14016	Fairchild	F4016	
		F4066	
	Motorola	MC14066	
	National	CD4016	
		CD4066	
	RCA	CD4016	
		CD4066	
	Sanyo	LC4016	
		LC4066	
	SGS	HCC/HCF4016	
		HCC/HCF4066	
	Signetics	HEF4016	
		HEF4066	
	Solitron	CM4016	
		CM4066	
		HCF4016	
	SSS	SCL4016	
		SCL4066	
	Toshiba	TC4016	
		TC4066	
MC14017	Fairchild	F4017	
	National	CD4017	
	RCA	CD4017	
	SGS	HCC/HCF4017	
	Signetics	HEF4017	
	Solitron	CM4017	
	SSS	SCL4017	
	Toshiba	TC4017	
MC14018	Fairchild	F4018	
	National	CD4018	
	RCA	CD4018	
	SGS	HCC/HCF4018	
MC14018	Signetics	HEF4018	
	Solitron	CM4018	
	SSS	SCL4018	
	Toshiba	TC4018	
◆MC1402	Exar	XR4202	
	Plessey	TAB1042	
MC14020	Fairchild	F4020	
	National	CD4020	
	RCA	CD4020	
	SGS	HCC/HCF4020	
	Signetics	HEF4020	
	Solitron	CM4020	
	SSS	SCL4020	
	Toshiba	TC4020	
MC14021	Fairchild	F4021	
	National	CD4021	
	RCA	CD4021	
	SGS	HCC/HCF4021	
	Signetics	HEF4021	
	SSS	SCL4021	
	Toshiba	TC4021	
MC14022	Fairchild	F4022	
	National	CD4022	
	RCA	CD4022	
	SGS	HCC/HCF4022	
	Signetics	HEF4022	
	Solitron	CM4022	
	SSS	SCL4022	
	Toshiba	TC4022	
MC14023	Fairchild	F4023	
	National	CD4023	
		MM74C10	
	RCA	CD4023	
	SGS	HCC/HCF4023	
	Signetics	HEF4023	
	Solitron	CM4023	
	SSS	SCL4023	
	Toshiba	TC4023	
MC14024	Fairchild	F4024	
	National	CD4024	
	RCA	CD4024	
	SGS	HCC/HCF4024	
	Signetics	HEF4024	
	Solitron	CM4024	
	SSS	SCL4024	
	Toshiba	TC4024	
MC14025	Fairchild	F4025	
	National	CD4025	
	RCA	CD4025	
	SGS	HCC/HCF4025	
	Signetics	HEF4025	
	Solitron	CM4025	
	SSS	SCL4025	
	Toshiba	TC4025	
MC14027	Fairchild	F4027	
	National	CD4027	
		MM74C76	
	OKI	MSM4027	
	RCA	CD4027	
	Sanyo	LC4027	
	SGS	HCC/HCF4027	
	Signetics	HEF4027	
	Solitron	CM4027	
	SSS	SCL4027	
MC14028	Fairchild	F4028	
	National	CD4028	
		MM74C42	
	OKI	MSM4028	
	RCA	CD4028	
	Sanyo	LC4028	
	SGS	HCC/HCF4028	
	Signetics	HEF4028	
	Solitron	CM4028	
	SSS	SCL4028	
	Toshiba	TC4028	
MC14029	Fairchild	F4029	
	National	CD40192	
		CD4029	
	RCA	CD40192	
		CD4029	
	SGS	HCC/HCF40192	
		HCC/HCF4029	
	Signetics	HEF40192	
	Solitron	CM4029	
	SSS	SCL4029	
		SCL4192	
	Toshiba	TC40192	
		TC4029	
MC1403	**AD**	**AD1403**	**3136**
	LinearTech	LT1009	
	SiliconG	SG3503	
		SG3505	
MC14032	RCA	CD4032	
	SGS	HCC/HCF4032	
	Solitron	CM4032	
	Toshiba	TC4032	
MC14034	Fairchild	F4034	
	National	CD4034	
	RCA	CD4034	
	SGS	HCC/HCF4034	
	Solitron	CM4034	
	SSS	SCL4034	
	Toshiba	TC4034	
MC14035	Fairchild	F4035	
	RCA	CD4035	
	SGS	HCC/HCF4035	
	Signetics	HEF4035	
	Solitron	CM4035	
	Toshiba	TC4035	
MC14035B	National	CD4035B	
MC14038	RCA	CD4038	
	SGS	HCC/HCF4038	
	Solitron	CM4038	
	Toshiba	TC4038	
MC14040	Fairchild	F4040	
	National	CD4040	
	RCA	CD4040	
	SGS	HCC/HCF4040	
	Signetics	HEF4040	
	Solitron	CM4040	
	SSS	SCL4040	
	Toshiba	TC4040	
MC14042	Fairchild	F4042	
	National	CD4042	
	RCA	CD4042	
	SGS	HCC/HCF4042	
	Signetics	HEF4042	
	Solitron	CM4042	
	SSS	SCL4042	
	Toshiba	TC4042	
MC14043	National	CD4043	
	RCA	CD4043	
	SGS	HCC/HCF4043	
	Signetics	HEF4043	
	Solitron	CM4043	
	SSS	SCL4043	
	Toshiba	TC4043	
MC14044	Fairchild	F4044	
	National	CD4044	
	RCA	CD4044	
	SGS	HCC/HCF4044	
	Signetics	HEF4044	
	Solitron	CM4044	
	Toshiba	TC4044	
MC14046	Fairchild	F4046	
	National	CD4046	
	RCA	CD4046	
	SGS	HCC/HCF4046	
	Solitron	CM4046	
	SSS	SCL4046	
MC14049	Fairchild	F4049	
	National	CD4049	
	OKI	MSM4049	
	RCA	CD4049	
	Sanyo	LC4049	
	SGS	HCC/HCF4049	
	Signetics	HEF4049	
	Solitron	CM4049	
	SSS	SCL4049	
	Toshiba	TC4049	
MC14050	Fairchild	F4050	
	National	CD4050	
	RCA	CD4050	
	SGS	HCC/HCF4050	
	Signetics	HEF4050	
	Solitron	CM4050	
	SSS	SCL4050	
	Toshiba	TC4050	
MC14051	Fairchild	F4051	
	National	CD4051	
	RCA	CD4051	
	SGS	HCC/HCF4051	
	Signetics	HEF4051	
	Solitron	CM4051	
	SSS	SCL4051	
	Toshiba	TC4051	
MC14052	Fairchild	F4052	
	RCA	CD4052	
	SGS	HCC/HCF4052	
	Signetics	HEF4052	
MC14052B	National	CD4052B	
	SSS	SCL4052B	
MC14053	Fairchild	F4053	
	National	CD4053	

(Continued)

◆ Discontinued

The manufacturers report their devices can be used as direct replacements.
Performance details often differ, so compare the specifications considering your requirements.

Motorola Semiconductor Products (Cont'd)

Manufacturer Device	Replacement Source	Device	IC Master Page
MC14053	RCA	CD4053	
	SGS	HCC/HCF4053	
	Signetics	HEF4053	
	Solitron	CM4053	
	SSS	SCL4053	
	Toshiba	**TC4053B**	**1363**
MC14060	National	CD4060	
	RCA	CD4060	
	SGS	HCC/HCF4060	
	Signetics	HEF4060	
	SSS	SCL4060	
MC14066	Fairchild	F4016	
		F4066	
	Motorola	MC14016	
	National	CD4016	
		CD4066	
	RCA	CD4016	
		CD4066	
	Sanyo	LC4016	
		LC4066	
	SGS	HCC/HCF4016	
		HCC/HCF4066	
	Signetics	HEF4016	
		HEF4066	
	Solitron	CM4016	
		CM4066	
		HCF4016	
	SSS	SCL4016	
		SCL4066	
	Toshiba	TC4016	
		TC4066	
MC14067	Fairchild	F4067	
	RCA	CD4067	
	SGS	HCC/HCF4067	
	Signetics	HEF4067	
MC14068	Fairchild	F4068	
	RCA	CD4068	
	SGS	HCC/HCF4068	
	Signetics	HEF4068	
	Solitron	CM4068	
	SSS	SCL4068	
	Toshiba	TC4068	
MC14069	Fairchild	F4069	
	National	CD4069	
		MM54C04	
		MM74C04	
	OKI	MSM4069	
	RCA	CD4069	
	Sanyo	LC4069	
	SGS	HCC/HCF4069	
	Signetics	HEF4069	
	Solitron	CM4069	
	SSS	SCL4069	
		SCL4449	
	Toshiba	TC4069	
MC14070	Fairchild	F4070	
	National	CD4070	
		MM74C86	
	RCA	CD4070	
	SGS	HCC/HCF4070	
	Signetics	HEF4070	
	Solitron	CM4070	
	SSS	SCL4070	
MC14071	Fairchild	F4071	
	National	CD4071	
		MM74C32	
	OKI	MSM4071	
	RCA	CD4071	
	Sanyo	LC4071	
	SGS	HCC/HCF4071	
	Signetics	HEF4071	
	Solitron	CM4071	
	SSS	SCL4071	
	Toshiba	TC4071	
MC14072	Fairchild	F4072	
	National	CD4072	
	RCA	CD4072	
	SGS	HCC/HCF4072	
	Signetics	HEF4072	
	SSS	SCL4072	
	Toshiba	TC4072	
MC14073	Fairchild	F4073	
	National	CD4073	
	RCA	CD4073	
	SGS	HCC/HCF4073	
	Signetics	HEF4073	
	Solitron	CM4073	
	SSS	SCL4073	
	Toshiba	TC4073	
MC14075	Fairchild	F4075	
	National	CD4075	
	RCA	CD4075	
	SGS	HCC/HCF4075	
	Signetics	HEF4075	
	Solitron	CM4075	
	SSS	SCL4075	
	Toshiba	TC4075	
MC14076	Fairchild	F4076	
	National	CD4076	
		MM54C173	
		MM74C173	
	RCA	CD4076	
	SGS	HCC/HCF4076	
	Signetics	HEF4076	
	Solitron	CM4076	
	SSS	SCL4076	
	Toshiba	TC4076	
MC14077	Fairchild	F4077	
	National	CD4077	
	RCA	CD4077	
	SGS	HCC/HCF4077	
	Signetics	HEF4077	
	Solitron	CM4077	
	SSS	SCL4077	
MC14078	Fairchild	F4078	
	RCA	CD4078	
	SGS	HCC/HCF4078	
	Signetics	HEF4078	
	Solitron	CM4078	
	SSS	SCL4078	
	Toshiba	TC4078	
MC1408	AMD	AM1408	
		DAC-08	
		SSS1408	
	AD	AD1408	
		ADDAC-08	
	Datel	DAC-08B	
		DAC-I8BC	
		DAC-IC8B	
		DAC-IC8BC	**3162**
	Fairchild	DAC-08	
		MA0802M	
		μA0801	
		μA0802	
	Hitachi	HA17408	
	Motorola	**DAC-08**	**3630**
	National	DAC0801	
		DAC0802	
		DAC0806	
		DAC0807	
		DAC0808	
	NEC	μPC624	
	PMI	**DAC-08**	**3637,3639**
		DAC-1408	
	Raytheon	**DAC-08**	**3664**
	Signetics	MC1408	
MC14081	Fairchild	F4081	
	National	CD4081	
		MM74C08	
	OKI	MSM4081	
	RCA	CD4081	
	Sanyo	LC4081	
	SGS	HCC/HCF4081	
	Signetics	HEF4081	
	Solitron	CM4081	
	SSS	SCL4081	
	Toshiba	TC4081	
MC14082	Fairchild	F4082	
	National	CD4082	
	RCA	CD4082	
	SGS	HCC/HCF4082	
	Signetics	HEF4082	
	SSS	SCL4082	
	Toshiba	TC4082	
MC14093B	Fairchild	F4093B	
	National	CD4093B	
	RCA	**CD4093B**	**704,1145**
	SSS	SCL4093B	
MC14094B	RCA	CD4094B	
	SSS	SCL4094B	
MC14097	Fairchild	F4097	
	RCA	CD4097	
	SGS	HCC/HCF4097	
MC14099B	National	CD4099B	
	RCA	**CD4099B**	**704,1146**
	SSS	SCL4099B	
MC1411	Exar	XR2001	
		XR2001C	
		XR2201C	
	Mitsubishi	M54524	
	Motorola	**ULN2001**	**3212**
			(Continued)
MC1411	NEC	μPA2001	
	RIFA	PBD3523-11	
	Sanyo	LB1231	
	SGS	L201	
		ULN2001	
	SiliconG	SG2001	
	Sprague	**ULN-2001**	**3269**
		ULQ-2001	
	TI	ULN2001A	
	Toshiba	TD62001	
		TD62101	
MC1412	Exar	XR2002C	
		XR2202C	
	Fairchild	MC1412	
	Mitsubishi	M54525	
	Motorola	**ULN2002**	**3212**
	NEC	μPA2002	
	RIFA	PBD352304	
	Sanyo	LB1232	
	SGS	L202	
		ULN2002	
	Signetics	NE5602	
	SiliconG	SG2002	
	Sprague	ULN-2002	
	TI	ULN2002A	
	Toshiba	TD62002	
MC1412T	Exar	XR2002	
	Sprague	ULQ-2002	
MC1413	Exar	XR2003C	
		XR2203C	
	Fairchild	MC1413	
	Mitsubishi	M54523	
	Motorola	**ULN2003**	**3212**
	NEC	μPA2003	
	RIFA	PBD352303	
	Sanyo	LB1233	
	SGS	L203	
		ULN2003	
	Signetics	NE5603	
		ULN2003	**3721**
	SiliconG	SG2003	
	Sprague	ULN-2003	
	Telefunken	TDA2003	
	TI	ULN2003A	
	Toshiba	TD62003	
		TD62103	
MC1413T	Exar	XR2003	
	RIFA	PBD3523-13	
	SiliconG	SG2023	
	Sprague	ULN-2023	
		ULQ-2003	
	TI	SN75468	
MC1414	National	LM1414	
	TI	TL514	
MC1416	Exar	XR2204C	
	Mitsubishi	M54526	
	Motorola	**ULN2004**	**3212**
	NEC	μPA2004	
	RIFA	PBD352302	
	Sanyo	LB1234	
	SGS	L204	
		ULN2004	
	Signetics	NE5604	
		ULN2004	**3721**
	SiliconG	SG2004	
	Sprague	ULN-2004	
		ULS-2004	
	TI	ULN2004A	
	Toshiba	TD62004	
		TD62104	
MC14160	Fairchild	F40160	
	National	CD40160	
	RCA	CD40160	
	SSS	SCL4160	
MC14161	Fairchild	F40161	
	National	CD40161	
	RCA	CD40161	
	SSS	SCL4161	
MC14162B	Fairchild	F40162	
	National	CD40162	
	RCA	CD40162	
	SSS	SCL4162	
MC14163B	Fairchild	F40163	
	National	CD40163	
	RCA	CD40163	
	SSS	SCL4163	
MC1416T	Exar	XR2004	
	Sprague	ULQ-2004	
MC1417	Sprague	UDN-2580	
MC14174B	Fairchild	F40174B	
	National	CD40174B	
			(Continued)
MC14174B	**RCA**	**CD40174B**	**704,1146**
	SSS	SCL4174B	
MC14175	Fairchild	F40175	
	National	CD40175	
		MM54C175	
		MM74C175	
	Signetics	HEF40175	
	Toshiba	TC40175	
MC14194	Fairchild	F40194	
	RCA	CD40194	
	SGS	HCC/HCF40194	
	Signetics	HEF40194	
MC1436	Datel	AM-464-2	
	Harris	HA-2645	
		LM343	
	Motorola	**MC1439**	**3615**
	National	LM1436	
		LM343	
	SiliconG	SG1436	
		SG343	
	TeledyneP	1332	
MC1439	Datel	AM-464-2	
	Harris	HA-2645	
		LM343	
	Motorola	**MC1436**	**3616**
	National	LM1436	
		LM343	
	SiliconG	SG1436	
		SG343	
	TeledyneP	1332	
MC14412	Exar	XR14412	
MC14433	TeledyneS	TSC14433	
		TSC14433A	
MC14442	National	ADC0829	
	TI	TLC532	
		TLC533	
MC14443	Fairchild	μA9708	
	Hitachi	HD14443	
		HD14447	
	Motorola	**MC14447**	**3629**
MC14444	National	ADC0830	
	TI	TLC530	
		TLC531	
MC14447	Fairchild	μA9708	
	Hitachi	HD14443	
		HD14447	
	Motorola	**MC14443**	**3629**
MC1445	TI	MC1445	
MC14502	RCA	CD4502	
	SGS	HCC/HCF4502	
	Signetics	HEF4502	
	SSS	SCL4502	
MC145026	SGS	M145026	
MC145028	SGS	MI45028	
MC14503	Fairchild	F40097B	
	Motorola	MC14503B	
	National	CD4503	
	RCA	CD4503	
	SGS	HCC/CFH4503	
MC14503B	Fairchild	F40097B	
	Motorola	MC14503	
	National	CD4503	
	RCA	CD4503	
	SGS	HCC/CFH4503	
MC145040	National	ADC0811	
	TI	TLC540	
		TLC541	
MC14504B	SSS	SCL4504B	
MC14505	Signetics	HEF4505	
MC14506B	**RCA**	**CD4086B**	**704,1145**
	SGS	HCC/HCF4086	
	Signetics	HEF4086B	
	SSS	SCL4086B	
MC14508	National	DM74147	
	RCA	CD4508	
	SGS	HCC/HCF4508	
	Signetics	**74147**	**1157**
		HEF4508	
		N82147	
	Solitron	CM4508	
	SSS	SCL4508	
	TI	SN74147	
	Toshiba	TC4508	
MC14510	Fairchild	F4510	
	National	CD4510	
	RCA	CD4510	
	SGS	HCC/HCF4510	
	Signetics	HEF4510	
	Solitron	CM4510	
	SSS	SCL4510	
	Toshiba	TC4510	

◆ Discontinued

Bold face device numbers indicate manufacturers data is provided in the IC Master on the pages noted.

Motorola Semiconductor Products (Cont'd)

Manufacturer Device	Replacement Source	Device	IC Master Page
MC14511	Fairchild	F4511	
	Mitel	MD4511	
	MMI	4511	
	National	CD4511	
	NEC	μPD4511	
	RCA	CD4511	
	SGS	HCC/HCF4511	
	Signetics	HEF4511	
	Solitron	CM4511	
	SSS	SCL4511	
	Toshiba	TC4511	
MC14512	Fairchild	F4512	
	National	CD4512	
	RCA	CD4512	
	SGS	HCC/HCF4512	
	SSS	SCL4512	
	Toshiba	TC4512	
MC14514	Fairchild	F4514	
	National	CD4514	
	RCA	CD4514	
	SGS	HCC/HCF4514	
	Signetics	HEF4514	
	Solitron	CM4514	
	SSS	SCL4514	
	Toshiba	TC4514	
MC14515	Fairchild	F4515	
	National	CD4515	
	RCA	CD4515	
	SGS	HCC/HCF4515	
	Signetics	HEF4515	
	Solitron	CM4515	
	SSS	SCL4515	
	Toshiba	TC4515	
MC145155	IMI	IMI145155	
MC145156	IMI	IMI145156	
MC145157	IMI	IMI145157	
MC145158	IMI	IMI145158	
MC14516	Fairchild	F4516	
	National	CD4516	
	RCA	CD4516	
	SGS	HCC/HCF4516	
	Signetics	HEF4516	
	Solitron	CM4516	
	SSS	SCL4516	
	Toshiba	TC4516	
MC14517	RCA	CD4517	
	SGS	HCC/HCF4517	
	Signetics	HEF4517	
	SSS	SCL4517	
MC14518	Fairchild	F4518	
	National	CD4518	
	RCA	CD4518	
	SGS	HCC/HCF4518	
	Signetics	HEF4518	
	Solitron	CM4518	
	SSS	SCL4518	
	Toshiba	TC4518	
MC14519	Hitachi	HD4519	
	National	CD4519	
	RCA	CD4519	
	Signetics	HEF4519	
MC14519B	Fairchild	F4019B	
MC14520	Fairchild	F4520	
	National	CD4520	
	OKI	MSM4520	
	RCA	CD4520	
	Sanyo	LC4520	
	SGS	HCC/HCF4520	
	Signetics	HEF4520	
	Solitron	CM4520	
	SSS	SCL4520	
	Toshiba	TC4520	
MC14521	Fairchild	F4521	
	RCA	CD4045	
	SGS	HCC/HCF4045	
	Signetics	HEF4521	
	Solitron	CM4045	
	SSS	SCL4445	
	Toshiba	TC4521	
MC1452100	**RCA**	**CD22100**	**1147,1152**
	SGS	M22100	
	SiliconSys	**SSI22100**	**3737**
MC14522B	Fairchild	F4522	
	National	CD4522	
	RCA	CD4522	
	SSS	SCL4522	
MC14526	Fairchild	F4526	
	National	CD4526	
MC14526	Signetics	HEF4526	
	SSS	SCL4526	
	Toshiba	TC4526	
MC14527	Fairchild	F4527	
	National	CD4527	
	RCA	CD4527	
	SGS	HCC/HCF4527	
	Signetics	HEF4527	
	SSS	SCL4527	
	Toshiba	TC4527	
MC14528	Fairchild	F4528	
	National	CD4528	
		MM74C221	
	RCA	CD4098	
	SGS	HCC/HCF4098	
	Signetics	HEF4528	
	SSS	SCL4528	
	Toshiba	TC4528	
MC14529	National	CD4529	
MC14531	Fairchild	F4531	
	RCA	CD40101	
	SGS	HCC/HCF40101	
	Signetics	HEF4531	
	SSS	SCL4531	
	Toshiba	TC4531	
MC14532	Fairchild	F4532	
	RCA	CD4532	
	SGS	HCC/HCF4532	
	Signetics	HEF4532	
	SSS	SCL4532	
	Toshiba	TC4532	
MC14533	Fairchild	F4553	
	Motorola	MC14553	
MC14534	Signetics	HEF4534	
MC14536	RCA	CD4536	
MC14538	National	CD4538	
	OKI	MSM4538	
	Signetics	HEF4538	
MC14539	Fairchild	F4539	
	Signetics	HEF4539	
	Toshiba	TC4539	
MC14541B	RCA	CD4541	
	Signetics	HEF4591	
MC14543	Fairchild	F4543	
	Motorola	MC14543B	
	National	CD4543	
	RCA	CD4543	
	Signetics	HEF4543	
	SSS	SCL4S43B	
	Toshiba	TC4543	
MC14543B	Fairchild	F4543	
	Motorola	MC14543	
	National	CD4543	
	RCA	CD4543	
	Signetics	HEF4543	
	SSS	SCL4S43B	
	Toshiba	TC4543	
MC145453	National	MM5453	
MC1455	Exar	XR555	
	Fairchild	μA555	
	Hitachi	HA17555	
	Intersil	NE555	
	Mitsubishi	M51841	
		M51848	
		M5251	
		M5E555	
	NEC	μPC1555	
	Raytheon	RC555	
	RCA	CA555	
	Sanyo	LB8555	
	SGS	NE555	
	Signetics	**NE555**	**3721**
		NE555N	
	TI	NE555	
	ThomsonCSF	LM555	
	Samsung	**NE555**	**3679**
MC14553	Fairchild	F4553	
	Motorola	MC14533	
MC14555	Fairchild	F4555	
	RCA	CD4555	
	SGS	HCC/HCF4555	
	Signetics	HEF4555	
	SSS	SCL4555	
	Toshiba	TC4555	
MC14556	Fairchild	F4556	
	RCA	CD4556	
	SGS	HCC/HCF4556	
	Signetics	HEF4556	
	SSS	SCL4556	
	Toshiba	TC4556	
MC14557	Fairchild	F4557	
	Signetics	HEF4557	
MC14557B	National	CD4031B	
	RCA	**CD4031B**	**704**
◆MC14558	RCA	CD4055	
MC1456	**Datel**	**AM-460-2**	**3163**
	Elantec	**EHA2605**	**3538**
	Harris	HA-2605	
	TI	MC1456	
MC14560	Toshiba	TC4560	
MC14561	Toshiba	TC4561	
MC14562B	RCA	CD4062A	
MC14569	RCA	CD4059	
	Signetics	HEF4059	
MC14572	Toshiba	TC4572	
MC14573	Holt	HI8573	
MC14574	Holt	HI8574	
MC14575	Intel	8212	
	NEC	μPB8212	
MC1458	Fairchild	UA1458HC	
	Harris	CM1458	
		HA5102	
	MicroPwr	MPOP14	
	National	LF412	
	NEC	MPC251	
	PMI	OP14	
	RCA	**CA1458**	**3672**
	SGS	MC1458	
	Signetics	**SA1458**	**3729**
	ThomsonCSF	μA1458	
	Samsung	**MC1458**	**3679**
		MC4558	**3679**
MC14580	RCA	CD40108	
	SGS	HCC/HCF40108	
MC14581	National	74C181	
	RCA	CD40181	
		CD4057	
	SGS	HCC/HCF40181	
	SSS	SCL4581	
MC14582	Fairchild	F4582	
	National	74C182	
	RCA	CD40182	
	SGS	HCC/HCF40182	
	SSS	SCL4582	
MC14583	Fairchild	F4583	
	Toshiba	TC4583	
MC14584	Fairchild	F40014	
	National	CD40106	
		CD4584	
		MM54C14	
		MM74C14	
	RCA	CD40106	
	SGS	HCC/HCF40106	
	Signetics	HEF40106	
	SSS	SCL4584	
MC14585	Fairchild	F40085	
	National	MM74C85	
	RCA	CD4585	
	SGS	HCC/HCF4585	
	Signetics	HEF4585	
	SSS	SCL4585	
	Toshiba	TC4585	
MC1465HC51	RCA	CDP65C51	
MC1468	Exar	XR1468	
		XR4195	
	Raytheon	RC4195	
	SiliconG	SG1468	
		SG2501A	
		SG3501A	
		SG4501	
MC146805	**RCA**	**CDP6805**	**1678**
MC146818	Hitachi	HD146818	
	RCA	**CDP6818**	**1673,1679**
MC146823	**RCA**	**CDP6823**	**1673,1679**
MC1468HC05	RCA	CDP68HC05	
MC1468HC68A	RCA	CDP68HC68A	
MC1468HC68R	RCA	CDP68HC68R	
MC1468HC68T	RCA	CDP68HC68T	
MC1471	Sprague	UDN-5711	
	TI	SN75476	
		UDN5711	
MC1472	Sprague	UDN-5712	
	TI	SN75475	
		UDN5712	
MC1473	Sprague	UDN-5713	
	TI	SN75478	
		UDN5713	
MC1474	Sprague	UDN-5714	
	TI	SN75479	
		UDN5714	
	Toshiba	TD62479	
MC1488	SGS	MC1488	
MC1489A	**Exar**	**XR1489A**	**3561**
	Fairchild	UA150	
		UA212A	
		μA1489A	
	National	DS1489A	
	SGS	MC1489	
	Signetics	**MC1489A**	**3720,3726**
	SiliconG	SG1489A	
	TI	MC1489A	
		SN75189A	
MC1495	SiliconG	SG1495	
MC1496	Fairchild	μA796	
	National	LM1496	
	Plessey	SL1496	
	Signetics	**MC1496**	**3722**
	SiliconG	SG1496	
MC1500AU10	AD	AD581	
	Harris	HA1608	
	LinearTech	LTREF01	
		REF-01A	
	Maxim	REF01	
	MicroPwr	MP5531	
		MPREF01	
	Motorola	MC1400AG10	
		MC1400AU10	
	PMI	REF-01AZ	
		REF01	
	Raytheon	**REF-01**	**3652**
		REF01	
	TeledyneS	TSC9495	
MC1500AU5	LinearTech	LTREF02	
		REF-02E	
	Maxim	REF02	
	MicroPwr	MP5532	
	Motorola	MC1400AU5	
	PMI	REF-02EZ	
		REF02	
	Raytheon	REF02	
	TeledyneS	TSC9496	
MC1503	AD	AD580	
	SiliconG	SG1503	
MC1508	AD	AD1508	
	Datel	DAC-IC8BM	
	National	MC1508	
	PMI	DAC-1508	
	Signetics	MC1508	
		SE5008	
		SE5009	
MC1514	National	LM1514	
	TI	TL514	
MC1536	Datel	AM-464-2M	
	Exar	XR1527A	
	Harris	HA-2640	
		LM143	
	National	LM143	
		LM1536	
	SiliconG	SG143	
		SG1536	
MC1537	Raytheon	RM1537	
MC1555	Exar	XR555M	
	Intersil	SE555	
	Raytheon	RM555	
	Signetics	**SE555**	**3724,3728**
	TI	**SE555**	**720**
MC1556	**Elantec**	**EHA2600**	**3538**
	Fairchild	μA741	
	Harris	HA-2600	
	TeledyneP	1326	
	TI	MC1556	
MC1558	LinearTech	LT1013	
MC1568	Exar	XR1568	
	Raytheon	RM4195	
	SiliconG	SG1501A	
		SG1568	
MC1590	National	LM3011	
	RCA	CA3011	
		CA3012	
MC1595	SiliconG	SG1595	
MC1596	National	LM1596	
	Signetics	MC1596	
	SiliconG	SG1596	
MC1648	Plessey	SP1648	
MC1650	Plessey	SP1650	
MC1651	Plessey	SP1651	
MC1658	Plessey	SP1658	
MC1660	Plessey	SP1660	
◆MC1661	Plessey	SP1661	
MC1662	Plessey	SP1662	
◆MC1663	Plessey	SP1663	
MC1664	Plessey	SP1664	
◆MC1665	Plessey	SP1665	

(Continued)

◆ Discontinued

The manufacturers report their devices can be used as direct replacements.
Performance details often differ, so compare the specifications considering your requirements.

Motorola Semiconductor Products (Cont'd)

Manufacturer Device	Replacement Source	Device	IC Master Page
MC1666	Plessey	SP1666	
◆MC1667	Plessey	SP1667	
MC1668	Plessey	SP1668	
◆MC1669	Plessey	SP1669	
MC1670	Fairchild	11C70	
	Plessey	SP1670	
◆MC1671	Plessey	SP1671	
MC1672	Plessey	SP1672	
◆MC1673	Plessey	SP1673	
MC1674	Plessey	SP1674	
◆MC1675	Plessey	SP1675	
MC1688	Fairchild	11C01	
MC1690	Fairchild	11C06	
MC1692	Plessey	SP1692	
MC1699	Fairchild	11C05	
	Plessey	SP8610	
		SP8616	
MC1709	Fairchild	µA709	
	Hitachi	HA1303	
	National	LM1709	
		LM709	
	NEC	µPC255	
		µPC55	
	RCA	**CA3038**	**3672**
	TI	µA709	
	ThomsonCSF	SFC2709	
	Toshiba	TA7502	
MC1723	Fairchild	µA723	
	Hitachi	HA17723	
	Intersil	LM723	
	National	LM723	
	Raytheon	RC723	
		RM723	
	RCA	CA723	
		LM723	
	SGS	L123	
		LM723	
	Signetics	**µA723**	**3721,3730**
	SiliconG	SG723	
	TI	µA723	
	ThomsonCSF	LM723	
MC1733	Fairchild	µA733	
	Hitachi	HA17733	
	Intersil	µA733	
	Motorola	NE592	
	National	LM733	
	Signetics	**µA733**	**3721,3729**
	TI	µA733	
MC1747	AMD	747	
	Fairchild	µA747	
	Hitachi	HA17747	
	MicroPwr	MPOP04	
	National	LM747	
	NEC	µPC251	
	PMI	**OP-04**	**3636**
		PM747	
	Raytheon	RC747	
		RM747	
	RCA	**CA747**	**3672**
	Signetics	**µA747**	**3721**
	TeledyneS	747	
	TI	µA747	
MC1776	Harris	HA-2720	
	Intersil	ICL7611	
		ICL8021	
		LM4250	
	Maxim	ICL7611	
	National	LF441	
		LM4250	
	PMI	OP20	
		OP21	
		OP22	
	SGS	MC1776	
	Solitron	UC4250	
	TI	TLC251	
		TLC271	
	ThomsonCSF	µA776	
MC2257	Micrel	MIC2257	
MC2259	Micrel	MIC2259	
MC2260	Micrel	M-IC2260	
MC2652	Signetics	SCN2652	
MC2653	**Motorola**	**MC68653**	**1657**
	Signetics	**SCN2653**	**1688**
MC2661	**Motorola**	**MC68661**	**1657**
	Signetics	SCN2661	
	SMC	COM2661	
MC2681	EXEL	XL88C681	
	Signetics	**SCN2681**	**1692**
MC2682	Signetics	SCN2682	
MC2910	Fairchild	29F10	
	ThomsonCSF	SFC2910	
◆MC3106	National	DM54H11	
MC3245	National	DS3245	
MC3301	Hitachi	HA17301	
	Motorola	**LM2900**	**3618**
	National	LM2900	
		LM3301	
	Raytheon	LM2900	
		RC3301	
	TI	LM2900	
MC3302	Cypress	CY7C901	
	Fairchild	µA2901	
		µA3302	
	Motorola	**LM2901**	**3631**
	National	LM2901	
		LM3302	
	NEC	µPC2901	
	PMI	CMP-04	
	Raytheon	LM2901	
		RC3302	
	RCA	CA3302	
	SGS	LM2901	
		MC3302	
	Signetics	**LM2901**	**3721,3722**
		MC3302	**3721**
	SiliconG	SG324A	
	TI	LM2901	
		LM3302	
	ThomsonCSF	LM2901	
MC3303	Fairchild	UA338	
		µA3303	
	SGS	MC3303	
	Signetics	**MC3303**	**3729**
	TI	MC3303	
MC33060	IPS	IP33060	
MC33063	**IPS**	**IP33063**	**3599**
MC33074	AnalogSys	MA374	
	Fairchild	UA774	
	Motorola	**MC34004**	**3618**
		MC34004A	
		MC34074	**3618**
	NEC	UPC4084	
	TI	TL074	
		TL084BC	
MC3346	Fairchild	UA3046	
	National	LM3046	
	Plessey	SL3046	
		SL3146	
	RCA	**CA3046**	**3678**
		CA3146	**3678**
	Sanyo	LA3046	
	SGS	CA3046	
		TBA331	
	SiliconG	SG3046	
		SG3146	
		SG3821	
	Sprague	ULN-2046	
	ThomsonCSF	SFC	
MC3357	MicroPwr	MP5071	
MC3359	Sprague	ULN-3859	
MC3361	Samsung	MC3361	
MC3386	Fairchild	UA3086	
	National	LM3086	
	Plessey	SL3086	
	RCA	**CA3086**	**3678**
	Sanyo	LA3086	
	SiliconG	SG3086	
		SG3886	
	Sprague	ULN-2086	
	ThomsonCSF	SFC2086	
MC34001	AnalogSys	MA333	
	Fairchild	UA771	
	NEC	UPC4081	
	TI	TL071	
		TL081C	
MC34001A	TI	LL081BC	
MC34001B	TI	TL081AC	
MC34002	AnalogSys	MA336	
	Fairchild	UA772	
	Harris	HA5082	
	NEC	UPC4082	
	TI	TL072	
		TL082C	
MC34002A	TI	TL082BC	
MC34002B	TI	TL082AC	
MC34004	AnalogSys	MA374	
	Fairchild	UA774	
	Motorola	**MC33074**	**3618**
		MC34004A	
		MC34074	**3618**
	NEC	UPC4084	
			(Continued)
MC34004	TI	TL074	
		TL084BC	
MC34004A	AnalogSys	MA374	
	Fairchild	UA774	
	Motorola	**MC33074**	**3618**
		MC34004	**3618**
		MC34074	**3618**
	NEC	UPC4084	
	TI	TL074	
		TL084BC	
MC34004B	TI	TL084AC	
MC3401	National	LM3401	
		LM3900	
	Raytheon	LM3900	
		RC3401	
	RCA	**CA3401**	**3674**
	TI	LM3900	
◆MC34022	PMI	OP-215	
MC3403	SGS	MC3403	
MC34060	**IPS**	**IP34060**	**3599**
MC34063	**IPS**	**IP34063**	**3599**
MC34074	AnalogSys	MA374	
	Fairchild	UA774	
	Motorola	**MC33074**	**3618**
		MC34004	**3618**
		MC34004A	
	NEC	UPC4084	
	TI	TL074	
		TL084BC	
MC3410	**Signetics**	**MC3410**	**3725**
MC3412	AD	AD565	
		AD565A	
	Fairchild	UA565	
	Harris	HI565A	
	MicroNet	MN565A	
	TeledyneP	TP565A	
MC3416	Raytheon	RC4444	
MC3420	MicroPwr	MP5078	
	Motorola	**MC3520**	**3626**
MC3423	SiliconG	SG3423	
	TI	MC3423	
MC3430	Motorola	MC3441	
	National	DS3651	
MC3432	National	DS3653	
MC3437	National	DS8837	
	Signetics	**N8T37**	**1175**
MC3441	**Motorola**	**MC3430**	**3631**
	National	DS3651	
MC3446	**Motorola**	**MC3446A**	**3210**
	TI	MC3446	
MC3446A	Motorola	MC3446	
	TI	MC3446	
MC3448A	Fairchild	UA3486	
		UA3487	
		UA350	
		µA3448A	
MC3450	National	DS3650	
MC3452	National	DS3652	
MC3458	Fairchild	µA798	
	Motorola	**MC3558**	**3617**
◆MC3461	Hitachi	HD103461	
MC3470	Cherry	CS3470A	
	Exar	XR3470	
MC3471	Cherry	CS3471	
	TI	MC3471	
MC3481	TI	SN75126	
MC3485	TI	SN75126	
MC3486	National	DS3486	
	TI	MC3486	
MC3487	National	DS3487	
		DS3687	
	TI	MC3487	
MC3488	TI	9636	
		9636A	
◆MC3491	Dionics	DI230	
	National	DS8889	
◆MC3492	Dionics	DI230	
	ITT	ITT505	
MC35001B	TI	TL081M	
MC35002B	**TI**	**TL082M**	**718**
MC35004	Harris	HA5084	
	TI	**TL084M**	**719**
MC35060	**IPS**	**IP35060**	**3599**
MC35063	**IPS**	**IP35063**	**3599**
MC3510	**Signetics**	**MC3510**	**3725**
		NE5410	**3690,3722**
MC3512	**AD**	**AD565S**	**3108**
MC3520	MicroPwr	MP5078	
	Motorola	**MC3420**	**3626**
MC3523	SiliconG	SG3523	
	TI	MC3523	
MC3558	Fairchild	µA798	
	Motorola	**MC3458**	**3617**
MC40175	RCA	CD40175	
MC4024	Motorola	MC4324	
MC4044	Motorola	MC4344	
MC4324	Motorola	MC4024	
MC4344	Motorola	MC4044	
MC4558	Exar	XR4558	
	Fairchild	µA4558	
	National	LM1458	
	Raytheon	RC4558	
	TI	RC4558	
MC471CP	MicroPwr	MPOP11	
	PMI	OP11	
MC4741	Exar	XR4751	
	Intersil	LM348	
	National	LM348	
	Raytheon	HA4741	
◆MC5400	**Fairchild**	**5400**	**609,616,622,623**
	National	DM5400	
	Signetics	5400	
	TI	**SN5400**	**712**
◆MC5401	National	DM5401	
	TI	**SN5401**	**712**
◆MC5402	**Fairchild**	**5402**	**609,616,622,623**
	National	DM5402	
	TI	**SN5402**	**712**
◆MC5403	National	DM5403	
	TI	**SN5403**	**712**
◆MC5404	**Fairchild**	**5404**	**609,616,622,623**
		9016	
	National	DM5404	
		DM9016C	
	TI	**SN5404**	**712**
◆MC5405	National	DM5405	
	TI	**SN5405**	**712**
◆MC5406	National	DM5406	
	TI	**SN5406**	**712**
◆MC5407	National	DM5407	
	TI	**SN5407**	**712**
◆MC5410	**Fairchild**	**5410**	**609,616,622,623**
	National	DM5410	
	TI	**SN5410**	**712**
◆MC54100	**TI**	**SN54100**	**712**
◆MC54107	National	DM54107	
	TI	**SN54107**	**712**
◆MC5412	**TI**	**SN5412**	**712**
◆MC54120	**TI**	**SN54120**	**712**
◆MC54121	**Fairchild**	**54121**	**609,616,622,623**
	National	DM54121	
	Signetics	54121	
	TI	**SN54121**	**712**
◆MC54122	**Fairchild**	**54122**	**609,616,622,623**
	TI	**SN54122**	**712**
◆MC54123	**Fairchild**	**54123**	**609,616,622,623**
	National	DM54123	
	Signetics	54123	
	TI	**SN54123**	**712**
◆MC5413	National	DM5413	
	TI	**SN5413**	**712**
◆MC54132	National	DM54132	
	Signetics	54132	
	TI	**SN54132**	**712**
◆MC5414	**Fairchild**	**5414**	**616**
	National	DM5414	
	Signetics	5414	
	TI	**SN5414**	**712**
◆MC54141	National	DM54141	
	Signetics	54141	
◆MC54145	National	DM54145	
◆MC54150	**Fairchild**	**54150**	**616**
	National	DM54150	
	TI	**SN54150**	**712**
◆MC54151	Fairchild	54151A	
	National	DM54151	
	Signetics	54151	
	TI	**SN54151A**	**712**
◆MC54153	**Fairchild**	**54153**	**609,616,622,623**
	National	DM54153	
	Signetics	54153	
	TI	**SN54153**	**712**
◆MC54155	National	DM54155	
	TI	**SN54155**	**712**
◆MC54156	National	DM54156	
	TI	**SN54156**	**712**

◆ Discontinued

Bold face device numbers indicate manufacturers data is provided in the IC Master on the pages noted.

Motorola Semiconductor Products (Cont'd)

Manufacturer Device	Replacement Source	Device	IC Master Page
◆MC54157	**Fairchild**	**54157**	609,616
	National	DM54157	
	Signetics	54157	
	TI	**SN54157**	712
◆MC5416	National	DM5416	
	TI	**SN5416**	712
◆MC54160	National	DM54160	
	Raytheon	RM9310	
	Signetics	54160	
	TI	**SN54160**	712
◆MC54161	**Fairchild**	**54161**	616
	National	DM54161	
	Signetics	54161	
	TI	**SN54161**	712
◆MC54162	National	DM54162	
	TI	**SN54162**	712
◆MC54163	National	DM54163	
	Signetics	54163	
	TI	**SN54163**	712
◆MC54165	**Fairchild**	**54165**	617
	National	DM54165 DM7590	
	Signetics	54165	
	TI	**SN54165**	712
◆MC54167	**TI**	**SN54167**	712
◆MC5417	National	DM5417	
	TI	**SN5417**	712
◆MC54170	**Fairchild**	**54170**	617
	National	DM54170	
	TI	**SN54170**	712
◆MC54174	**Fairchild**	**54174**	609,617,622,623
	National	DM54174	
	Signetics	54174	
	TI	**SN54174**	712
◆MC54175	**Fairchild**	**54175**	609,617,622,623
	National	DM54175	
	Signetics	54175	
	TI	**SN54175**	712
◆MC54176	National	DM54176	
	Raytheon	RM8280	
	Signetics	54176 S8280	
	TI	**SN54176**	712
◆MC54177	National	DM54177 DM7281	
	Raytheon	RM8281	
	Signetics	54177 S7281 S8281	
	TI	**SN54177**	712
◆MC54180	National	DM54180	
	Signetics	54180	
	TI	**SN54180**	712
◆MC54181	Hitachi	HD74181	
	National	DM74181	
	Raytheon	RC9341	
	Signetics	**74181**	1157
	TI	SN74181	
◆MC54182	National	DM54182	
	Raytheon	RM9342	
	TI	**SN54182**	712
◆MC54190	National	DM54190	
	Signetics	54190	
	TI	**SN54190**	712
◆MC54191	**Fairchild**	**54191**	617
	National	DM54191	
	Signetics	54191	
	TI	**SN54191**	712
◆MC54193	National	DM54193 DM7563	
	TI	**SN54193**	712
◆MC54194	National	DM54194	
	Signetics	54194	
◆MC54195	Fairchild	9300	
	National	DM54195	
	TI	**SN54195**	712
◆MC54196	National	DM54196	
	Signetics	54196	
	TI	**SN54196**	712
◆MC54198	National	DM54198	
	TI	**SN54198**	712
◆MC54199	National	DM54199	
	TI	**SN54199**	712
◆MC5420	**Fairchild**	**5420**	609,616,622,623
	National	DM5420	
	Signetics	5420	
	TI	**SN5420**	712
◆MC5423	National	DM5423	
	TI	**SN5423**	712
◆MC5425	**Fairchild**	**5425**	616
	National	DM5425	
	TI	**SN5425**	712
◆MC5426	National	DM5426	
	Signetics	5426	
	TI	**SN5426**	712
◆MC5427	National	DM5427	
	TI	SN5427	
◆MC54278	**TI**	**SN54278**	712
◆MC54279	**Fairchild**	**54279**	617
	Signetics	54279	
	TI	**SN54279**	712
◆MC54283	**TI**	**SN54283**	712
◆MC54290	**TI**	**SN54290**	712
◆MC54293	**TI**	**SN54293**	712
◆MC54298	**Fairchild**	**54298**	617
	TI	**SN54298**	712
◆MC5430	**Fairchild**	**5430**	609,616,622,623
	National	DM5430	
	TI	**SN5430**	712
◆MC5437	**Fairchild**	**5437**	609,616,622,623
	National	DM5437	
	TI	**SN5437**	712
◆MC5438	National	DM5438	
	TI	**SN5438**	712
◆MC5440	**Fairchild**	**5440**	609,616,622,623
	National	DM5440	
	TI	**SN5440**	712
◆MC5442	Fairchild	5442A	
	National	DM5442	
	Signetics	5442	
	TI	**SN5442A**	712
◆MC5443	Signetics	5443	
◆MC5445	National	DM5445	
	TI	**SN5445**	712
◆MC5450	National	DM5450	
	TI	**SN5450**	712
◆MC5451	**Fairchild**	**5451**	616
	National	DM5451	
	TI	**SN5451**	712
◆MC5453	National	DM5453	
	TI	**SN5453**	712
◆MC5454	National	DM5454	
	TI	**SN5454**	712
◆MC5470	National	DM5470	
	TI	**SN5470**	712
◆MC5472	National	DM5472	
	TI	**SN5472**	712
◆MC5473	**Fairchild**	**5473**	616
	National	DM5473	
	Signetics	5473	
	TI	**SN5473**	712
◆MC5474	**Fairchild**	**5474**	609,616,622,623
	National	DM5474	
	Signetics	5474	
	TI	**SN5474**	712
◆MC5475	**Fairchild**	**5475**	616
	National	DM5475	
	Signetics	5475	
	TI	**SN5475**	712
◆MC5476	**Fairchild**	**5476**	616
	National	DM5476	
	Signetics	5476	
	TI	**SN5476**	712
◆MC5477	Signetics	5477	
◆MC5482	**TI**	**SN5482**	712
◆MC5485	**Fairchild**	**5485**	616
	National	DM5485	
	Signetics	5485	
	TI	**SN5485**	712
◆MC5486	**Fairchild**	**5486**	609,616,622,623
	National	DM5486	
	Signetics	5486	
	TI	**SN5486**	712
◆MC5494	**TI**	**SN5494**	712
◆MC5496	National	DM5496	
	Signetics	5496	
	TI	**SN5496**	712
◆MC5497	**Fairchild**	**5497**	616
	TI	**SN5497**	712
MC54F00	**Fairchild**	**54F00**	607,610,620,623,1021
	Signetics	54F00	
MC54F02	**Fairchild**	**54F02**	607,610,620,623
	Signetics	54F02	
MC54F04	**Fairchild**	**54F04**	607,610,620,623
	Signetics	54F04	
MC54F08	**Fairchild**	**54F08**	607,610,620,623
	Signetics	54F08	
MC54F10	**Fairchild**	**54F10**	607,610,620,623
	Signetics	54F10	
MC54F109	**Fairchild**	**54F109**	607,610,620,623
	Signetics	54F109	
MC54F11	**Fairchild**	**54F11**	607,610,620,623
	Signetics	54F11	
MC54F138	**Fairchild**	**54F138**	607,610,620,623
	Signetics	54F138	
MC54F139	**Fairchild**	**54F139**	607,610,620,623
	Signetics	54F139	
MC54F20	**Fairchild**	**54F20**	607,610,620,623
	Signetics	54F20	
MC54F240	**Fairchild**	**54F240**	607,610,620,623
	Signetics	54F240	
MC54F241	**Fairchild**	**54F241**	607,610,620,623
	Signetics	54F241	
MC54F242	Signetics	54F242	
MC54F243	**Fairchild**	**54F243**	610,1024
	Signetics	54F243	
MC54F244	**Fairchild**	**54F244**	607,610,620,623
	Signetics	54F244	
MC54F32	**Fairchild**	**54F32**	607,610,620,623
	Signetics	54F32	
MC54F333	Signetics	54F333	
MC54F373	**Fairchild**	**54F373**	607,611,620,623
	Signetics	54F373	
MC54F374	**Fairchild**	**54F374**	607,611,620,623
	Signetics	54F374	
MC54F534	**Fairchild**	**54F534**	611,1022
	Signetics	54F534	
MC54F74	**Fairchild**	**54F74**	607,610,620,623
	Signetics	54F74	
◆MC54H00	National	DM54H00	
◆MC54H01	National	DM54H01	
◆MC54H04	National	DM54H04	
◆MC54H05	National	DM54H05	
◆MC54H08	Fairchild	54H08	
	National	DM54H08	
◆MC54H10	National	DM54H10	
◆MC54H108	National	DM54H108	
◆MC54H11	National	DM54H11	
◆MC54H20	National	DM54H20	
◆MC54H21	National	DM54H21	
◆MC54H22	National	DM54H22	
◆MC54H30	National	DM54H30	
◆MC54H40	National	DM54H40	
◆MC54H50	National	DM54H50	
◆MC54H51	National	DM54H51	
◆MC54H52	National	DM54H52	
◆MC54H53	National	DM54H53	
◆MC54H54	National	DM54H54	
◆MC54H55	National	DM54H55	
◆MC54H60	National	DM54H60	
◆MC54H61	National	DM54H61	
◆MC54H62	National	DM54H62	
◆MC54H71	National	DM54H71	
◆MC54H72	National	DM54H72	
◆MC54H74	National	DM54H74	
MC54HC00	National	MM54HC00	
	RCA	**CD54HC00**	1149
	Signetics	54HC00	
	SSS	SS54HC00	
MC54HC02	National	MM54HC02	
	RCA	**CD54HC02**	1149
	Signetics	54HC02	
MC54HC04	National	MM54HC04	
	RCA	**CD54HC04**	1149
	Signetics	54HC04	
MC54HC08	National	MM54HC08	
	RCA	**CD54HC08**	1149
	Signetics	54HC08	
	TI	**SN54HC08**	714
MC54HC10	National	MM54HC10	
	RCA	**CD54HC10**	1149
	Signetics	54HC10	
	TI	**SN54HC10**	714
MC54HC107	National	MM54HC107	
	RCA	**CD54HC107**	1149
	Signetics	54HC107	
	TI	**SN54HC107**	714
MC54HC109	National	MM54HC109	
	RCA	**CD54HC109**	1149
	Signetics	54HC109	
	TI	**SN54HC109**	714
MC54HC11	National	MM54HC11	
	RCA	**CD54HC11**	1149
	Signetics	54HC11	
	TI	**SN54HC11**	714
MC54HC112	National	MM54HC112	
	RCA	**CD54HC112**	1149
	Signetics	54HC112	
	TI	**SN54HC112**	714
MC54HC123	National	MM54HC123	
	RCA	**CD54HC123**	1150
	Signetics	54HC123	
MC54HC132	National	MM54HC132	
	RCA	**CD54HC132**	1149
	Signetics	54HC132	
MC54HC133	National	MM54HC133	
	RCA	**CD74HC123**	1150
	Signetics	54HC133	
	TI	**SN54HC133**	714
MC54HC137	National	MM54HC137	
	RCA	**CD54HC137**	1150
	SSS	SN54HC137 SS54HC137	
	TI	**SN54HC137**	714
MC54HC138	National	MM54HC138	
	RCA	**CD54HC138**	1150
	Signetics	54HC138	
	SSS	SS54HC138	
	TI	**SN54HC138**	714
MC54HC139	National	MM54HC139	
	RCA	**CD54HC139**	1150
	Signetics	54HC139	
	SSS	SS54HC139	
	TI	**SN54HC139**	714
MC54HC14	National	MM54HC14	
	RCA	**CD54HC14**	1149
	Signetics	54HC14	
	TI	**SN54HC14**	714
MC54HC147	National	MM54HC147	
	RCA	**CD54HC147**	1150
	Signetics	54HC147	
MC54HC151	National	MM54HC151	
	RCA	**CD54HC151**	1150
	Signetics	54HC151	
	TI	**SN54HC151**	714
MC54HC153	National	MM54HC153	
	RCA	**CD54HC153**	1150
	Signetics	54HC153	
	TI	**SN54HC153**	714
MC54HC154	National	MM54HC154	
	RCA	**CD54HC154**	1150
	Signetics	54HC154	
MC54HC157	**RCA**	**CD54HC157**	1150
	Signetics	54HC157	
	TI	**SN54HC157**	714
MC54HC158	National	MM54HC158	
	RCA	**CD54HC158**	1150
	Signetics	54HC158	
	TI	**SN54HC158**	714
MC54HC160	National	MM54HC160	
	RCA	**CD54HC160**	1150
	Signetics	54HC160	
	TI	**SN54HC160**	714
	Universal	US74HC160	
MC54HC161	National	MM54HC161	
	RCA	**CD54HC161**	1150
	Signetics	54HC161	
	TI	**SN54HC161**	714
MC54HC162	National	MM54HC162	
	RCA	**CD54HC162**	1150
	Signetics	54HC162	
	TI	**SN54HC162**	714
MC54HC163	National	MM54HC163	
	RCA	**CD54HC163**	1150
	Signetics	54HC163	
	TI	**SN54HC163**	714
MC54HC164	National	MM54HC164	
	RCA	**CD54HC164**	1149

(Continued)

◆ Discontinued

The manufacturers report their devices can be used as direct replacements.
Performance details often differ, so compare the specifications considering your requirements.

Motorola Semiconductor Products (Cont'd)

Manufacturer Device	Replacement Source	Device	IC Master Page
MC54HC164	Signetics	54HC164	
	TI	**SN54HC164**	**714**
MC54HC165	National	MM54HC165	
	RCA	**CD54HC165**	**1149**
	Signetics	54HC165	
	TI	**SN54HC165**	**714**
MC54HC166	**RCA**	**CD54HC166**	**1149**
	Signetics	54HC166	
	TI	**SN54HC166**	**714**
MC54HC173	National	MM54HC173	
	RCA	**CD54HC173**	**1149**
	Signetics	54HC173	
	TI	**SN54HC173**	**714**
MC54HC174	National	MM54HC174	
	RCA	**CD54HC174**	**1149**
	Signetics	54HC174	
	TI	**SN54HC174**	**714**
MC54HC175	National	MM54HC175	
	RCA	**CD54HC175**	**1149**
	Signetics	54HC175	
	TI	**SN54HC175**	**714**
MC54HC181	**RCA**	**CD54HC181**	**1150**
MC54HC182	**RCA**	**CD54HC182**	**1150**
MC54HC190	**RCA**	**CD54HC190**	**1150**
MC54HC192	National	MM54HC192	
	RCA	**CD54HC192**	**1150**
	Signetics	54HC192	
	TI	**SN54HC192**	**714**
MC54HC193	National	MM54HC193	
	RCA	**CD54HC193**	**1150**
	Signetics	54HC193	
	TI	**SN54HC193**	**714**
MC54HC194	National	MM54HC194	
	RCA	**CD54HC194**	**1149**
	Signetics	54HC194	
	TI	**SN54HC194**	**714**
MC54HC195	National	MM54HC195	
	NEC	UPD23C1000	
	RCA	**CD54HC195**	**1149**
	Signetics	54HC195	
	TI	**SN54HC195**	**714**
	VTI	**VT231024**	**4265**
MC54HC20	National	MM54HC20	
	RCA	**CD54HC20**	**1149**
	Signetics	54HC20	
	TI	**SN54HC20**	**714**
MC54HC221	National	MM54HC221	
	RCA	**CD54HC221**	**1150**
	Signetics	54HC221	
MC54HC237	National	MM54HC237	
	RCA	**CD54HC237**	**1150**
	SSS	SN54HC237	
	TI	**SN54HC237**	**714**
MC54HC239	TI	SN54HC239	
MC54HC240	Mitel	MD54HC240	
	National	MM54HC240	
	RCA	**CD54HC240**	**1149**
	Signetics	54HC240	
	SSS	SS54HC240	
	Supertex	SI54HC240	
	TI	**SN54HC240**	**714**
MC54HC241	Mitel	MD54HC241	
	National	MM54HC241	
	RCA	**CD54HC241**	**1149**
	Signetics	54HC241	
	SSS	SS54HC241	
	Supertex	SI54HC241	
	TI	**SN54HC241**	**714**
MC54HC242	National	MM54HC242	
	RCA	**CD54HC242**	**1149**
	Signetics	54HC242	
	TI	**SN54HC242**	**714**
MC54HC243	National	MM54HC243	
	RCA	**CD54HC243**	**1149**
	Signetics	54HC243	
	TI	**SN54HC243**	**714**
MC54HC244	Mitel	MD54HC244	
	National	MM54HC244	
	RCA	**CD54HC244**	**1149**
	Signetics	54HC244	
	SSS	SS54HC244	
	Supertex	SI54HC244	
	Telmos	TMD54HC244	
	TI	**SN54HC244**	**714**
MC54HC245	National	MM54HC245	
	RCA	**CD54HC245**	**1149**
	Signetics	54HC245	
	SSS	SS54HC245	
	TI	**SN54HC245**	**714**
MC54HC251	National	MM54HC251	
	RCA	**CD54HC251**	**1150**
	Signetics	54HC251	
	TI	**SN54HC251**	**714**
MC54HC253	National	MM54HC253	
	RCA	**CD54HC253**	**1150**
	Signetics	54HC253	
	TI	**SN54HC253**	**714**
MC54HC257	National	MM54HC257	
	RCA	**CD54HC257**	**1150**
	Signetics	54HC257	
	TI	**SN54HC257**	**714**
MC54HC259	National	MM54HC259	
	RCA	**CD54HC259**	**1150**
	Signetics	54HC259	
	TI	**SN54HC259**	**714**
MC54HC266	National	MM54HC266	
	RCA	CD54HC266	
	Signetics	54HC266	
	TI	**SN54HC266**	**714**
MC54HC27	National	MM54HC27	
	RCA	**CD54HC27**	**1149**
	Signetics	54HC27	
	TI	**SN54HC27**	**714**
MC54HC273	CTI	54HC273	
	RCA	**CD54HC273**	**1149**
	Signetics	54HC273	
	TI	**SN54HC273**	**714**
MC54HC280	National	MM54HC280	
	RCA	**CD54HC280**	**1150**
	Signetics	54HC280	
	TI	**SN54HC280**	**714**
MC54HC283	**RCA**	**CD54HC283**	**1150**
MC54HC299	National	MM54HC299	
	RCA	**CD54HC299**	**1149**
	Signetics	54HC299	
MC54HC30	National	MM54HC30	
	RCA	**CD54HC30**	**1149**
	Signetics	54HC30	
	TI	**SN54HC30**	**714**
MC54HC32	National	MM54HC32	
	RCA	**CD54HC32**	**1149**
	Signetics	54HC32	
	TI	**SN54HC32**	**714**
MC54HC354	National	MM54HC354	
	RCA	**CD54HC354**	**1150**
	Signetics	54HC354	
MC54HC356	National	MM54HC356	
	RCA	**CD54HC356**	**1150**
	Signetics	54HC356	
MC54HC365	National	MM54HC365	
	RCA	**CD54HC365**	**1149**
	Signetics	54HC365	
MC54HC366	National	MM54HC366	
	RCA	**CD54HC366**	**1149**
	Signetics	54HC366	
	TI	**SN54HC366**	**714**
MC54HC367	National	MM54HC367	
	RCA	**CD54HC367**	**1149**
	Signetics	54HC367	
	TI	**SN54HC367**	**714**
MC54HC368	National	MM54HC368	
	RCA	**CD54HC368**	**1149**
	Signetics	54HC368	
	TI	**SN54HC368**	**714**
MC54HC373	Mitel	MD54HC373	
	National	MM54HC373	
	RCA	**CD54HC373**	**1150**
	Signetics	54HC373	
	SSS	SS54HC373	
	Supertex	SI54HC373	
	TI	**SN54HC373**	**714**
MC54HC374	Mitel	MD54HC374	
	National	MM54HC374	
	RCA	**CD54HC374**	**1149**
	Signetics	54HC374	
	SSS	SS54HC374	
	Supertex	SI54HC374	
	TI	**SN54HC374**	**714**
MC54HC377	**RCA**	**CD54HC377**	**1149**
	Signetics	54HC377	
	TI	**SN54HC377**	**714**
MC54HC386	**TI**	**SN54HC386**	**714**
MC54HC390	National	MM54HC390	
	RCA	**CD54HC390**	**1150**
	Signetics	54HC390	
	TI	**SN54HC390**	**714**
MC54HC393	National	MM54GC393	
	RCA	**CD54HC393**	**1150**
	Signetics	54HC393	
	TI	**SN54HC393**	**714**
MC54HC4002	National	MM54HC4002	
	RCA	**CD54HC4002**	**1149**
	Signetics	54HC4002	
	TI	**SN54HC4002**	**714**
MC54HC4016	**RCA**	**CD54HC4016**	**1149**
MC54HC4017	National	MM54HC4017	
	RCA	**CD54HC4017**	**1150**
	Signetics	54HC4017	
MC54HC4020	National	MM54HC4020	
	RCA	**CD54HC4020**	**1150**
	Signetics	54HC4020	
	TI	**SN54HC4020**	**714**
MC54HC4024	**RCA**	**CD54HC4024**	**1150**
	Signetics	54HC4024	
	TI	**SN54HC4024**	**714**
MC54HC4040	National	MM54HC4040	
	RCA	**CD54HC4040**	**1150**
	Signetics	54HC4040	
	TI	**SN54HC4040**	**714**
MC54HC4046	**RCA**	**CD54HC4046**	**1150**
MC54HC4049	National	MM54HC4049	
	RCA	CD54HC4049	
	Signetics	54HC4049	
MC54HC4050	National	MM54HC4050	
	RCA	CD54HC4050	
	Signetics	54HC4050	
MC54HC4051	**RCA**	**CD54HC4051**	**1150**
	Signetics	54HC4051	
MC54HC4052	**RCA**	**CD54HC4052**	**1150**
	Signetics	54HC4052	
MC54HC4053	**RCA**	**CD54HC4053**	**1150**
	Signetics	54HC4053	
MC54HC4060	National	MM54HC4060	
	RCA	**CD54HC4060**	**1150**
	Signetics	54HC4060	
	TI	**SN54HC4060**	**714**
MC54HC4066	**RCA**	**CD54HC4066**	**1149**
MC54HC4075	National	MM54HC4075	
	RCA	**CD54HC4075**	**1149**
MC54HC4078	National	MM54HC4078	
MC54HC42	National	MM54HC42	
	RCA	**CD54HC42**	**1150**
	Signetics	54HC42	
	TI	**SN54HC42**	**714**
MC54HC4351	**RCA**	**CD54HC4351**	**1150**
MC54HC4352	**RCA**	**CD54HC4352**	**1150**
MC54HC4353	**RCA**	**CD54HC4353**	**1150**
MC54HC4514	National	MM54HC4514	
	RCA	**CD54HC4514**	**1150**
	Signetics	54HC4514	
MC54HC4538	National	MM54HC4538	
	RCA	**CD54HC4538**	**1150**
	Signetics	54HC4538	
MC54HC4543	**RCA**	**CD54HC4543**	**1150**
MC54HC533	National	MM54HC533	
	RCA	**CD54HC533**	**1150**
	Signetics	54HC533	
	SSS	SS54HC533	
	TI	**SN54HC533**	**714**
MC54HC534	National	MM54HC534	
	RCA	**CD54HC534**	**1149**
	Signetics	54HC534	
	SSS	SS54HC534	
	TI	**SN54HC534**	**714**
MC54HC540	**RCA**	**CD54HC540**	**1149**
	SPI	SP54HC540	
	SSS	SS54HC540	
MC54HC573	National	MM54HC573	
	RCA	**CD54HC573**	**1150**
	Signetics	54HC573	
	SSS	SS54HC573	
MC54HC574	National	MM54HC574	
	RCA	**CD54HC574**	**1149**
	Signetics	54HC574	
	SSS	SS54HC574	
	TI	**SN54HC574**	**714**
MC54HC589	TI	SN54HC589	
MC54HC590	**TI**	**SN54HC590**	**714**
MC54HC592	**TI**	**SN54HC592**	**714**
MC54HC593	**TI**	**SN54HC593**	**714**
MC54HC640	National	MM54HC640	
	RCA	**CD54HC640**	**1149**
	Signetics	54HC640	
	SSS	SS54HC640	
	TI	**SN54HC640**	**714**
MC54HC643	National	MM54HC643	
	RCA	**CD54HC643**	**1149**
	Signetics	54HC643	
	TI	**SN54HC643**	**714**
MC54HC646	National	MM54HC646	
	RCA	**CD54HC646**	**1149**
			(Continued)
MC54HC646	Signetics	54HC646	
	TI	**SN54HC646**	**714**
MC54HC648	National	MM54HC648	
	RCA	**CD54HC648**	**1149**
	Signetics	54HC648	
	TI	**SN54HC648**	**714**
MC54HC651	**TI**	**SN54HC651**	**714**
MC54HC652	**TI**	**SN54HC652**	**714**
MC54HC658	TI	SN54HC658	
MC54HC659	TI	SN54HC659	
MC54HC664	TI	SN54HC664	
MC54HC665	TI	SN54HC665	
MC54HC688	National	MM54HC688	
	RCA	**CD54HC688**	**1150**
	Signetics	54HC688	
MC54HC73	National	MM54HC73	
	Nitron	NC74HCT42	
	RCA	**CD54HC73**	**1149**
	Signetics	54HC73	
MC54HC74	National	MM54HC74	
	RCA	**CD54HC74**	**1149**
	Signetics	54HC74	
	TI	**SN54HC74**	**714**
MC54HC75	National	MM54HC75	
	RCA	**CD54HC75**	**1150**
	Signetics	54HC75	
	TI	**SN54HC75**	**714**
MC54HC76	National	MM54HC76	
	Signetics	54HC76	
MC54HC85	National	MM54HC85	
	RCA	**CD54HC85**	**1150**
	Signetics	54HC85	
MC54HC86	National	MM54HC86	
	RCA	**CD54HC86**	**1149**
	Signetics	54HC86	
	TI	**SN54HC86**	**714**
MC54HCT00	**RCA**	**CD54HCT00**	**1149**
	Signetics	54HCT00	
MC54HCT03	**RCA**	**CD54HCT03**	**1149**
MC54HCT04	**RCA**	**CD54HCT04**	**1149**
	Signetics	54HCT04	
MC54HCT125	**RCA**	**CD54HCT125**	**1149**
MC54HCT126	**RCA**	**CD54HCT126**	**1149**
MC54HCT138	CTI	54HCT138	
	IDT	IDT54HCT138	
	Mitel	MD54HCT138	
	SPI	SP54HCT138	
	Signetics	54HCT138	
	SSS	SS54HCT138	
	TI	**SN54HCT138**	**714**
MC54HCT157	**RCA**	**CD54HCT157**	**1150**
	Signetics	54HCT157	
MC54HCT158	**RCA**	**CD54HCT158**	**1150**
	Signetics	54HCT158	
MC54HCT240	CTI	54HCT240	
	Mitel	MD54HCT240	
	National	MM54HCT240	
	RCA	**CD54HCT240**	**1149**
	SPI	SP54HCT240	
	Supertex	SI54HCT240	
	TI	**SN54HCT240**	**714**
MC54HCT241	CTI	54HCT241	
	Mitel	MD54HCT241	
	National	MM54HCT241	
	RCA	**CD54HCT241**	**1149**
	SPI	SP54HCT241	
	Signetics	54HCT241	
	SSS	SS54HCT241	
	Supertex	SI54HCT241	
	TI	**SN54HCT241**	**714**
MC54HCT244	CTI	54HCT244	
	Mitel	MD54HCT244	
	National	MM54HCT244	
	RCA	**CD54HCT244**	**1149**
	SPI	SP54HCT244	
	Signetics	54HCT244	
	SSS	SS54HCT244	
	Supertex	SI54HCT244	
	TI	**SN54HCT244**	**714**
MC54HCT245	CTI	54HCT245	
	Mitel	MD54HCT245	
	RCA	**CD54HCT245**	**1149**
	SPI	SP54HCT245	
	Signetics	54HCT245	
	SSS	SS54HCT245	
	TI	**SN54HCT245**	**714**
MC54HCT257	**RCA**	**CD54HCT257**	**1150**
	Signetics	54HCT257	
MC54HCT258	**RCA**	**CD54HCT258**	**1150**
MC54HCT373	CTI	54HCT373	
	Mitel	MD54HCT343	
		MD54HCT373	
			(Continued)

◆ Discontinued

Bold face device numbers indicate manufacturers data is provided in the IC Master on the pages noted.

ALTERNATE SOURCE DIRECTORY

Motorola Semiconductor Products (Cont'd)

Manufacturer Device	Replacement Source	Device	IC Master Page
MC54HCT373	National	MM54HCT373	
	RCA	**CD54HCT373**	**1150**
	SPI	SP54HCT373	
	Signetics	54HCT373	
	SSS	SS54HCT373	
	Supertex	SI54HCT373	
	TI	**SN54HCT373**	**714**
MC54HCT374	CTI	54HCT374	
	Mitel	MD54HCT374	
	National	MM54HCT374	
	RCA	**CD54HCT374**	**1149**
	SPI	SP54HCT374	
	SSS	SS54HCT374	
	Supertex	SI54HCT374	
	TI	**SN54HCT374**	**714**
MC54HCT533	CTI	54HCT533	
	RCA	**CD54HCT533**	**1150**
	Signetics	54HCT533	
	SSS	SS54HCT533	
MC54HCT534	CTI	54HCT534	
	RCA	**CD54HCT534**	**1149**
	SSS	SS54HCT534	
MC54HCT540	CTI	54HCT540	
	Mitel	MD54HCT540	
	RCA	**CD54HCT540**	**1149**
	SPI	SP54HCT540	
	Signetics	54HCT540	
	SSS	SS54HCT540	
	TI	**SN54HCT540**	**714**
MC54HCT541	CTI	54HCT541	
	Mitel	MD54HCT541	
	RCA	**CD54HCT541**	**1149**
	SPI	SP54HCT541	
	Signetics	54HCT541	
	SSS	SS54HCT541	
	TI	**SN54HCT541**	**714**
MC54HCT640	**RCA**	**CD54HCT640**	**1149**
	Signetics	54HCT640	
	SSS	SS54HCT640	
MC54HCT643	**RCA**	**CD54HCT643**	**1149**
	Signetics	54HCT643	
MC54HCT651	TI	SN54HCT651	
MC54HCT652	TI	SN54HCT652	
MC54HCT658	TI	SN54HCT658	
MC54HCT659	TI	SN54HCT659	
MC54HCT664	TI	SN54HCT664	
MC54HCT665	TI	SN54HCT665	
MC54HCU04	RCA	CD54HCU04	
	Signetics	54HCU04	
MC55107	National	DS55107	
		LM55107A	
	TI	**SN55107A**	**721**
		SN55107B	**721**
MC55108	Fairchild	55108	
	National	DS55108	
		LM55108A	
	TI	**SN55108A**	**721**
		SN55108B	**721**
MC5522	Motorola	MC5523	
	National	LM5522	
	TI	SN5522	
MC5523	Motorola	MC5522	
	National	LM5522	
	TI	SN5522	
MC5524	Fairchild	MC5524	
	National	LM5524	
	Raytheon	RM5524	
	TI	SN5524	
MC5525	Fairchild	MC5525	
	National	LM5525	
MC5528	Fairchild	MC5528	
	National	LM5528	
MC5529	Fairchild	MC5529	
	National	LM5529	
MC55325	National	DS55325	
	SiliconG	SG55325	
	TI	**SN55325**	**722**
MC5534	Fairchild	MC5534	
	National	LM5534	
MC5535	National	LM5535	
MC5539	National	LM5539	
MC6108	AMD	AM6108	
MC6800	Fairchild	F6800A	
	Hitachi	HD6800	
		HD68A00	
		HD68B00	
	ThomsonCSF	EF6800	
MC68000	Hitachi	HD68000	
	Mostek	**MK68000**	**1647**

(Continued)

Manufacturer Device	Replacement Source	Device	IC Master Page
MC68000	Rockwell	R68000	
	Signetics	**SCN68000**	**1720**
	ThomsonCSF	EF68000	
MC68010	Mostek	MK68010	
MC6802	Fairchild	F6802	
	GouldAMI	S6802	
	Hitachi	HD6802	
	ThomsonCSF	EF6802	
MC6804	ThomsonCSF	EF6804	
MC6805	GouldAMI	S6805	
	Hitachi	HD6805	
	ThomsonCSF	EF6805	
MC6808	Fairchild	F6808	
	GouldAMI	S6808	
	ThomsonCSF	EF6808	
MC6809	GouldAMI	S6809	
	Hitachi	HD6809	
		HD68A09	
		HD68B09	
	ThomsonCSF	EF6809	
MC6810	Fairchild	F6810	
	GouldAMI	S6810	
	Hitachi	HD6810	
		HD68A10	
	Motorola	**MCM6810**	**1662,4119**
	ThomsonCSF	EF6810	
MC6820	Rockwell	R6520	
MC68200	**Mostek**	**MK68200**	**1650**
MC6840	Fairchild	F6840	
	GouldAMI	S6840	
	Hitachi	HD6840	
MC6843	Hitachi	HD6843	
MC6844	Hitachi	HD6844	
MC6845	Fairchild	F6845	
	GouldAMI	S684SE	
	Hitachi	HD6845	
MC68450	Hitachi	HD68450	
MC68451	**Mostek**	**MK68451**	**1651**
MC6845A	Fairchild	F6845A	
	Hitachi	HD6845A	
MC6848	**RCA**	**CDP6848**	**1673,1679**
MC6850	Fairchild	F6850	
	GouldAMI	S1602	
	Hitachi	HD6850	
	ThomsonCSF	EF6850	
MC6852	Fairchild	F6852	
	GouldAMI	S6852	
	Hitachi	HD6852	
◆MC68564	**Mostek**	**MK68564**	**1652**
MC6860	Fairchild	F6860	
MC6862	Fairchild	F6862	
MC68652	**Signetics**	**SCN68652**	**1686**
MC68653	Motorola	MC2653	
	Signetics	**SCN2653**	**1688**
MC68661	Motorola	MC2661	
	Signetics	SCN2661	
	SMC	COM2661	
MC68681	EXEL	XL68C681	
	Signetics	**SCN68681**	**1730**
MC68682	Signetics	68682	
MC6880A	Hitachi	HD268T26	
	Motorola	MC8T26	
	Signetics	N8T26	
MC6885	**Motorola**	**MC8T95**	**3209**
	National	DM8095	
	Signetics	**N8T95**	**1175**
	TI	SN74365	
MC68901	**Mostek**	**MK68901**	**1653**
MC68A00	GouldAMI	S68A00	
MC68A10	GouldAMI	S68A10	
MC68A21	GouldAMI	S68A21	
MC68A50	GouldAMI	S68A50	
MC68A54	GouldAMI	S68A54	
MC68B00	GouldAMI	S68B00	
MC68B10	GouldAMI	S68B10	
MC68B21	GouldAMI	S68B21	
MC68B50	GouldAMI	S68B50	
MC68B54	GouldAMI	S68B54	
MC68HC01	Hitachi	HD6301	
		HD6303	
	Motorola	MC68HC03	
MC68HC03	Hitachi	HD6301	
		HD6303	
	Motorola	MC68HC01	
◆MC7412	Fairchild	7412	
	TI	SN7412	
◆MC74178	Raytheon	RC8270	
	TI	SN74178	
◆MC74179	Fairchild	74179	
	Raytheon	RC8271	

(Continued)

Manufacturer Device	Replacement Source	Device	IC Master Page
◆MC74179	**Signetics**	**N8271**	**1175**
	TI	SN74179	
MC74F00	**Fairchild**	**74F00**	**1021,5310**
	Signetics	**74F00**	**1156**
MC74F02	**Fairchild**	**74F02**	**1021,5310**
	Signetics	**74F02**	**1156**
MC74F04	**Fairchild**	**74F04**	**1021,5310**
	Signetics	**74F04**	**1156**
MC74F08	**Fairchild**	**74F08**	**1021,5310**
	Signetics	**74F08**	**1156**
MC74F10	**Fairchild**	**74F10**	**1021,5310**
	Signetics	**74F10**	**1156**
MC74F109	**Fairchild**	**74F109**	**1021,5310**
	Signetics	**74F109**	**1156**
MC74F11	**Fairchild**	**74F11**	**1021,5310**
	Signetics	**74F11**	**1156**
MC74F138	**Fairchild**	**74F138**	**1025,5310**
	Signetics	**74F138**	**1157**
MC74F139	**Fairchild**	**74F139**	**1025**
	Signetics	**74F139**	**1157**
MC74F189	Cypress	CY7F189	
	Fairchild	**74F189**	**1027,5310**
MC74F20	**Fairchild**	**74F20**	**1021,5310**
	Signetics	**74F20**	**1156**
MC74F240	**Fairchild**	**74F240**	**1024,5310**
	Signetics	**74F240**	**1157**
MC74F241	**Fairchild**	**74F241**	**1024,5310**
	Signetics	**74F241**	**1157**
MC74F242	**Fairchild**	**74F242**	**1024**
	Signetics	**74F242**	**1158**
MC74F243	**Fairchild**	**74F243**	**1024**
	Signetics	**74F243**	**1158**
MC74F244	**Fairchild**	**74F244**	**1024,5310**
	Signetics	**74F244**	**1158**
MC74F2968	AMD	AM2968	
MC74F2969	AMD	AM2969	
MC74F2970	AMD	AM2970	
MC74F32	**Fairchild**	**74F32**	**1021**
	Signetics	**74F32**	**1156**
MC74F373	**Fairchild**	**74F373**	**1022,5310**
	Signetics	**74F373**	**1158**
MC74F374	**Fairchild**	**74F374**	**1022,5310**
	Signetics	**74F374**	**1158**
MC74F533	**Fairchild**	**74F533**	**1022,5310**
	Signetics	**74F533**	**1159**
MC74F534	**Fairchild**	**74F534**	**1022,5310**
	Signetics	**74F534**	**1159**
MC74F74	**Fairchild**	**74F74**	**1021,5310**
	Signetics	**74F74**	**1156**
◆MC74H00	Fairchild	74H00	
	National	DM74H00	
	TI	SN74H00	
◆MC74H01	Fairchild	74H01	
		74H08	
	National	DM74H01	
		DM74H08	
	TI	SN74H01	
◆MC74H04	Fairchild	74H04	
	National	DM74H04	
	TI	SN74H04	
◆MC74H05	Fairchild	74H05	
	TI	SN74H05	
◆MC74H08	Fairchild	74H01	
		74H08	
	National	DM74H01	
		DM74H08	
	TI	SN74H01	
◆MC74H10	Fairchild	74H10	
	National	DM74H10	
	TI	SN74H10	
◆MC74H101	Fairchild	74H101	
	Signetics	74H101	
	TI	SN74H101	
◆MC74H102	TI	SN74H102	
◆MC74H108	Fairchild	74H108	
	National	DM74H108	
	TI	SN74H108	
◆MC74H11	Fairchild	74H11	
	National	DM74H11	
	TI	SN74H11	
◆MC74H20	Fairchild	74H20	
	National	DM74H20	
	TI	SN74H20	
◆MC74H21	Fairchild	74H21	
	National	DM74H21	
	TI	SN74H21	
◆MC74H22	Fairchild	74H22	
	TI	SN74H22	
◆MC74H30	Fairchild	74H30	
	National	DM74H30	
	TI	SN74H30	

Manufacturer Device	Replacement Source	Device	IC Master Page
◆MC74H40	Fairchild	74H40	
	National	DM74H40	
	TI	SN74H40	
◆MC74H50	Fairchild	74H51	
	National	DM74H51	
	TI	SN74H51	
◆MC74H51	Fairchild	74H51	
	National	DM74H51	
	TI	SN74H51	
◆MC74H52	Fairchild	74H52	
	TI	SN74H52	
◆MC74H53	Fairchild	74H53	
	TI	SN74H53	
◆MC74H54	Fairchild	74H54	
	TI	SN74H54	
◆MC74H55	Fairchild	74H55	
	TI	SN74H55	
◆MC74H60	TI	SN74H60	
◆MC74H61	Fairchild	74H61	
	TI	SN74H61	
◆MC74H62	Fairchild	74H62	
	National	DM74H62	
	TI	SN74H62	
◆MC74H71	TI	SN74H71	
◆MC74H72	Fairchild	74H72	
◆MC74H73	Fairchild	74H73	
	TI	SN74H73	
◆MC74H74	Fairchild	74H74	
	National	DM74H74	
	TI	SN74H74	
◆MC74H76	TI	SN74H76	
MC74HC00	Hitachi	HD74HC00	
	National	MM74HC00	
	RCA	**CD74HC00**	**1149**
	SPI	SP74HC00	
	SGS	M74HC00	
	Signetics	**74HC00**	**1156**
	TI	SN74HC00	
	Toshiba	**TC40H000**	**1363**
	Universal	US74HC00	
MC74HC02	Hitachi	HD74HC02	
	National	MM74HC02	
	RCA	**CD74HC02**	**1149**
	SPI	SP74HC02	
	SGS	M74HC02	
	Signetics	**74HC02**	**1156**
	TI	SN74HC02	
	Toshiba	**TC40H002**	**1363**
	Universal	US74HC02	
MC74HC03	National	MM74HC03	
	RCA	**CD74HC03**	**1149**
	SGS	M74HC03	
	TI	SN74HC03	
	Toshiba	**TC74HC03**	**1363**
	Universal	US74HC03	
MC74HC04	Hitachi	HD74HC04	
	National	MM74HC04	
	RCA	**CD74HC04**	**1149**
	SPI	SP74HC04	
	SGS	M74HC04	
	TI	SN74HC04	
	Toshiba	**TC40H004**	**1363**
	Universal	US74HC04	
MC74HC05	TI	SN74HC05	
	Universal	US74HC05	
MC74HC08	Hitachi	HD74HC08	
	National	MM74HC08	
	RCA	**CD74HC08**	**1149**
	SPI	SP74HC08	
	SGS	M74HC08	
	Signetics	**74HC08**	**1156**
	TI	SN74HC08	
	Universal	US74HC08	
MC74HC10	Hitachi	HD74HC10	
	National	MM74HC10	
	RCA	**CD74HC10**	**1149**
	SPI	SP74HC10	
	SGS	M74HC10	
	Signetics	**74HC10**	**1156**
	SiliconG	SG75474	
	TI	SN74HC10	
	Toshiba	**TC40H010**	**1363**
	Universal	US74HC10	
MC74HC107	Hitachi	HD74HC107	
	National	MM74HC107	
	Nitron	NC74HC107	
	RCA	**CD74HC107**	**1149**
	SPI	SP74HC107	
	SGS	M74HC107	
	Signetics	**74HC107**	**1156**
	TI	SN74HC107	

(Continued)

◆ Discontinued

The manufacturers report their devices can be used as direct replacements.
Performance details often differ, so compare the specifications considering your requirements.

Motorola Semiconductor Products (Cont'd)

Manufacturer Device	Replacement Source	Device	IC Master Page
MC74HC107	**Toshiba**	**TC40H107**	**1363**
	Universal	US74HC107	
MC74HC109	Hitachi	HD74HC109	
		HD74HC14	
	National	MM74HC109	
	Nitron	NC74HC109	
	RCA	**CD74HC109**	**1149**
	SPI	SP74HC109	
	SGS	M74HC109	
	Signetics	**74HC109**	**1156**
	TI	SN74HC109	
	Toshiba	**TC74HC109**	**1363**
	Universal	US74HC109	
MC74HC11	Hitachi	HD74HC11	
	National	MM74HC11	
	RCA	**CD74HC11**	**1149**
	SPI	SP74HC11	
	SGS	M74HC11	
	Signetics	**74HC11**	**1156**
	TI	SN74HC11	
	Toshiba	**TC40H011**	**1363**
	Universal	US74HC11	
MC74HC112	Hitachi	HD74HC112	
	National	MM74HC112	
	RCA	**CD74HC112**	**1149**
	SPI	SP74HC112N	
	SGS	M74HC112	
	Signetics	**74HC112**	**1156**
	TI	SN74HC112	
	Universal	US74HC112	
MC74HC113	Hitachi	HD74HC113	
	National	MM74HC113	
	SPI	SP74HC113	
	SGS	M74HC113	
	TI	SN74HC113	
	Universal	US74HC113	
MC74HC123	Hitachi	HD74HC123	
	National	MM74HC123	
	SGS	M74HC123	
	Signetics	**74HC123**	**1157**
	TI	SN74HC123	
	Universal	US74HC123	
MC74HC125	Hitachi	HD74HC125	
	National	MM74HC125	
	SPI	SP74HC125	
	SGS	M74HC125	
	TI	SN74HC125	
	Toshiba	**TC74HC125**	**1363**
	Universal	US74HC125	
MC74HC126	Hitachi	HD74HC126	
	National	MM74HC126	
	SPI	SP74HC126	
	SGS	M74HC126	
	TI	SN74HC126	
	Toshiba	**TC74HC126**	**1363**
	Universal	US74HC126	
MC74HC132	Hitachi	HD74HC132	
	National	MM74HC132	
	RCA	**CD74HC132**	**1149**
	SPI	SP74HC132	
	SGS	M74HC132	
	Signetics	**74HC132**	**1157**
	TI	SN74HC132	
	Universal	US74HC132	
MC74HC133	National	MM74HC133	
	RCA	CD74HC133	
	SPI	SP74HC133	
	SGS	M74HC133	
	Signetics	74HC133	
	TI	SN74HC133	
	Universal	US74HC133	
MC74HC137	Hitachi	HD74HC137	
	National	MM74HC137	
	SPI	SP74HC137	
	SGS	M74HC137	
	TI	SN74HC137	
	Toshiba	**TC74HC137**	**1363**
	Universal	US74HC137	
MC74HC138	Hitachi	HD74HC138	
	National	MM74HC138	
	Nitron	NC74HC138	
	RCA	**CD74HC138**	**1150**
	SPI	SP74HC138	
	SGS	M74HC138	
	Signetics	**74HC138**	**1157**
	SSS	SS74HC138	
	TI	SN74HC138	
	Universal	US74HC138	
MC74HC139	Hitachi	HD74HC139	
	National	MM74HC139	
	Nitron	NC74HC139	
	RCA	**CD74HC139**	**1150**
	SPI	SP74HC139	
	SGS	M74HC139	
	Signetics	**74HC139**	**1157**
	SSS	SS74HC139	
	TI	SN74HC139	
	Toshiba	**TC40H139**	**1363**
	Universal	US74HC139	
MC74HC14	National	MM74HC14	
	RCA	**CD74HC14**	**1149**
	SPI	SP74HC14	
	SGS	M74HC14	
	Signetics	**74HC14**	**1156**
	TI	SN74HC14	
	Universal	US74HC14	
MC74HC147	Hitachi	HD74HC147	
	National	MM74HC147	
	RCA	**CD74HC147**	**1150**
	SPI	SP74HC147	
	SGS	M74HC147	
	Signetics	**74HC147**	**1157**
	TI	SN74HC147	
	Universal	US74HC147	
MC74HC151	Hitachi	HD74HC151	
	National	MM74HC151	
	RCA	**CD74HC151**	**1150**
	SPI	SP74HC151	
	SGS	M74HC151	
	Signetics	**74HC151**	**1157**
	TI	SN74HC151	
	Universal	US74HC151	
MC74HC153	Hitachi	HD74HC153	
	National	MM74HC153	
	RCA	**CD74HC153**	**1150**
	SPI	SP74HC153	
	SGS	M74HC153	
	Signetics	**74HC153**	**1157**
	TI	SN74HC153	
	Toshiba	**TC40H153**	**1363**
	Universal	US74HC153	
MC74HC154	Hitachi	HD74HC154	
	National	MM74HC154	
	RCA	**CD74HC154**	**1150**
	SGS	M74HC154	
	Signetics	**74HC154**	**1157**
	TI	SN74HC154	
	Universal	US74HC154	
MC74HC155	Toshiba	TC74CH155	
MC74HC157	Hitachi	HD74HC157	
	National	MM74HC157	
	Nitron	NC74HC157	
	RCA	**CD74HC157**	**1150**
	SPI	SP74HC157	
	SGS	M74HC157	
	Signetics	**74HC157**	**1157**
	TI	SN74HC157	
	Toshiba	**TC40H157**	**1363**
	Universal	US74HC157	
MC74HC158	Hitachi	HD74HC158	
	National	MM74HC158	
	RCA	**CD74HC158**	**1150**
	SPI	SP74HC158	
	SGS	M74HC158	
	Signetics	**74HC158**	**1157**
	TI	SN74HC158	
	Toshiba	**TC40H158**	**1363**
	Universal	US74HC158	
MC74HC160	National	MM74HC160	
	RCA	**CD74HC160**	**1150**
	SPI	SP74HC160	
	SGS	M74HC160	
	Signetics	**74HC160**	**1157**
	TI	SN74HC160	
	Universal	US74HC160	
MC74HC161	Hitachi	HD74HC161	
	National	MM74HC161	
	RCA	**CD74HC161**	**1150**
	SPI	SP74HC161	
	SGS	M74HC161	
	Signetics	**74HC161**	**1157**
	TI	SN74HC161	
	Universal	US74HC161	
MC74HC162	Hitachi	HD74HC162	
	National	MM74HC162	
	RCA	**CD74HC162**	**1150**
	SPI	SP74HC162	
	SGS	M74HC162	
	Signetics	**74HC162**	**1157**
MC74HC162	TI	SN74HC162	
	Universal	US74HC162	
MC74HC163	Hitachi	HD74HC163	
	National	MM74HC163	
	RCA	**CD74HC163**	**1150**
	SPI	SP74HC163	
	SGS	M74HC163	
	Signetics	**74HC163**	**1157**
	TI	SN74HC163	
	Universal	US74HC163	
MC74HC164	Hitachi	HD74HC164	
	National	MM74HC164	
	RCA	**CD74HC164**	**1149**
	SPI	SP74HC164	
	SGS	M74HC164	
	Signetics	**74HC164**	**1157**
	TI	SN74HC164	
	Universal	US74HC164	
MC74HC165	Hitachi	HD74HC165	
	National	MM74HC165	
	RCA	**CD74HC165**	**1149**
	SPI	SP74HC165	
	SGS	M74HC165	
	Signetics	**74HC165**	**1157**
	TI	SN74HC165	
	Universal	US74HC165	
MC74HC166	Nitron	NC74HC166	
	RCA	**CD74HC166**	**1149**
	SGS	M74HC166	
	Signetics	**74HC166**	**1157**
	TI	SN74HC166	
	Universal	US74HC166	
MC74HC173	Hitachi	HD74HC173	
	National	MM74HC173	
	RCA	**CD74HC173**	**1149**
	SPI	SP74HC173	
	SGS	M74HC173	
	Signetics	**74HC173**	**1157**
	TI	SN74HC173	
	Universal	US74HC173	
MC74HC174	Hitachi	HD74HC174	
	National	MM74HC174	
	Nitron	NC74HC174	
	RCA	**CD74HC174**	**1149**
	SPI	SP74HC174	
	SGS	M74HC174	
	Signetics	74HC174	
	TI	SN74HC174	
	Toshiba	**TC40H174**	**1363**
	Universal	US74HC174	
MC74HC175	Hitachi	HD74HC175	
	National	MM74HC175	
	Nitron	NC74HC175	
	RCA	**CD74HC175**	**1149**
	SPI	SP74HC175	
	SGS	M74HC175	
	Signetics	**74HC175**	**1157**
	TI	SN74HC175	
	Toshiba	**TC40H175**	**1363**
	Universal	US74HC175	
MC74HC181	SGS	M74HC181	
MC74HC182	SPI	SP74HC182	
	SGS	M74HC182	
MC74HC190	Hitachi	HD74HC190	
	RCA	**CD74HC190**	**1150**
	SGS	M74HC190	
	Signetics	PC74HC190	
		PCF74HC190	
	TI	SN74HC190	
	Toshiba	**TC74HC190**	**1363**
	Universal	US74HC190	
MC74HC192	Hitachi	HD74HC192	
	National	MM74HC192	
	RCA	**CD74HC192**	**1150**
	SPI	SP74HC192	
	SGS	M74HC192	
	Signetics	**74HC192**	**1157**
	TI	SN74HC192	
	Toshiba	**TC40H192**	**1363**
	Universal	US74HC192	
MC74HC193	Hitachi	HD74HC193	
	National	MM74HC193	
	RCA	**CD74HC193**	**1150**
	SPI	SP74HC193	
	SGS	M74HC193	
	Signetics	**74HC193**	**1157**
	TI	SN74HC193	
	Toshiba	**TC40H193**	**1363**
	Universal	US74HC193	
MC74HC194	Hitachi	HD74HC194	
	National	MM74HC194	
	RCA	**CD74HC194**	**1149**
MC74HC194	SPI	SP74HC194	
	SGS	M74HC194	
	Signetics	**74HC194**	**1157**
	TI	SN74HC194	
	Universal	US74HC194	
MC74HC195	Hitachi	HD74HC195	
	National	MM74HC195	
	RCA	**CD74HC195**	**1149**
	SPI	SP74HC195	
	SGS	M74HC195	
	Signetics	**74HC195**	**1157**
	TI	SN74HC195	
	Universal	US74HC195	
MC74HC20	Hitachi	HD74HC20	
	National	MM74HC20	
	RCA	**CD74HC20**	**1149**
	SPI	SP74HC20	
	SGS	M74HC20	
	Signetics	**74HC20**	**1156**
	TI	SN74HC20	
	Toshiba	**TC40H020**	**1363**
	Universal	US74HC20	
MC74HC221	National	MM74HC221	
	RCA	**CD74HC221**	**1150**
	SGS	M74HC221	
	Signetics	74HC221	
	Universal	US74HC221	
MC74HC237	Hitachi	HD74HC237	
	SGS	M74HC237	
	TI	SN74HC137	
		SN74HC237	
	Toshiba	**TC74HC237**	**1363**
	Universal	US74HC237	
MC74HC239	SPI	SP74HC239	
	TI	SN74HC239	
MC74HC240	Hitachi	HD74HC240	
	Mitel	MD74HC240	
	National	MM74HC240	
	Nitron	NC74HC240	
	RCA	**CD74HC240**	**1149**
	SPI	SP74HC240	
	SGS	M74HC240	
	Signetics	**74HC240**	**1157**
	SSS	SS74HC240	
	Supertex	SI74HC240	
	TI	SN74HC240	
	Toshiba	**TC40H240**	**1363**
	Universal	US74HC240	
	Zytrex	ZX74HC240	
MC74HC241	Hitachi	HD74HC241	
	Mitel	MD74HC241	
	National	MM74HC241	
	Nitron	NC74HC241	
	RCA	**CD74HC241**	**1149**
	SPI	SP74HC241	
	SGS	M74HC241	
	Signetics	**74HC241**	**1157**
	SSS	SS74HC241	
	Supertex	SI74HC241	
	TI	SN74HC241	
	Universal	US74HC240	
	Zytrex	ZX74HC241	
MC74HC242	Hitachi	HD74HC242	
	National	MM74HC242	
	Nitron	NC74HC242	
	RCA	**CD74HC242**	**1149**
		SGN	
	SPI	SP74HC242	
	SGS	M74HC242	
	Signetics	**74HC242**	**1158**
	TI	SN74HC242	
	Universal	US74HC242	
MC74HC243	Hitachi	HD74HC243	
	Motorola	**MC74HC245**	**1124**
	National	MM74HC243	
	RCA	**CD74HC243**	**1149**
	SPI	SP74HC243	
	SGS	M74HC243	
		M74HC245	
	Signetics	**74HC243**	**1158**
	TI	SN74HC243	
	Universal	US74HC243	
MC74HC244	Hitachi	HD74HC244	
	Mitel	MD74HC244	
	National	MM74HC244	
	Nitron	NC74HC244	
	RCA	**CD74HC244**	**1149**
	SPI	SP74HC244	
	SGS	M74HC244	
	Signetics	**74HC244**	**1158**
	SSS	SS74HC244	
	Supertex	SI74HC244	

(Continued)

◆ Discontinued

Bold face device numbers indicate manufacturers data is provided in the IC Master on the pages noted.

Motorola Semiconductor Products (Cont'd)

Manufacturer Device	Replacement Source	Device	IC Master Page
MC74HC244	TI	SN74HC244	
	Universal	US74HC244	
	Zytrex	ZX74HC244	
MC74HC245	Hitachi	HD74HC243	
	Motorola	**MC74HC243**	**1124**
	National	MM74HC243	
	RCA	**CD74HC243**	**1149**
	SPI	SP74HC243	
	SGS	M74HC243	
		M74HC245	
	Signetics	**74HC243**	**1158**
	TI	SN74HC243	
	Universal	US74HC243	
MC74HC251	Hitachi	HD74HC251	
	National	MM74HC251	
	RCA	**CD74HC251**	**1150**
	SPI	SP74HC251	
	SGS	M74HC251	
	Signetics	**74HC251**	**1158**
	TI	SN74HC251	
	Universal	US74HC251	
MC74HC253	Hitachi	HD74HC253	
	National	MM74HC253	
	RCA	**CD74HC253**	**1150**
	SPI	SP74HC253	
	SGS	M74HC253	
	Signetics	**74HC253**	**1158**
	TI	SN74HC253	
	Universal	US74HC253	
MC74HC257	Hitachi	HD74HC257	
	National	MM74HC257	
	Nitron	NC74HC257	
	RCA	**CD74HC257**	**1150**
	SPI	SP74HC257	
	SGS	M74HC257	
	Signetics	**74HC257**	**1158**
	TI	SN74HC257	
	Universal	US74HC257	
MC74HC258	Hitachi	HD74HC258	
	TI	SN74HC258	
	Toshiba	**TC74HC258**	**1363**
	Universal	US74HC258	
MC74HC259	Hitachi	HD74HC259	
	National	MM74HC259	
	RCA	**CD74HC259**	**1150**
	SPI	SP74HC259	
	Signetics	**74HC259**	**1158**
	TI	SN74HC259	
	Universal	US74HC259	
MC74HC266	Hitachi	HD74HC266	
	National	MM74HC266	
	SPI	SP74HC266	
	SGS	M74HC266	
	Signetics	**74HC266**	**1158**
	TI	SN74HC266	
	Universal	US74HC266	
MC74HC27	National	MM74HC27	
	RCA	**CD74HC27**	**1149**
	SPI	SP74HC27	
	SGS	M74HC27	
	Signetics	**74HC27**	**1156**
	TI	SN74HC27	
	Toshiba	**TC40H027**	**1363**
	Universal	US74HC27	
MC74HC273	CTI	74HC273	
	Hitachi	HD74HC273	
	Nitron	NC74HC273	
	RCA	**CD74HC273**	**1149**
	SPI	SP74HC273	
	SGS	M74HC273	
	Signetics	**74HC273**	**1158**
	TI	SN74HC273	
	Universal	US74HC273	
MC74HC280	Hitachi	HD74HC280	
	National	MM74HC280	
	RCA	**CD74HC280**	**1150**
	SPI	SP74HC280	
	SGS	M74HC280	
	Signetics	**74HC280**	**1158**
	TI	SN74HC280	
MC74HC283	SGS	M74HC283	
	Universal	US74HC283	
MC74HC292	SGS	M74HC292	
MC74HC294	SGS	M74HC294	
MC74HC298	Hitachi	HD74HC298	
	SPI	SP74HC298	
	SGS	M74HC298	
	TI	SN74HC298	
	Universal	US74HC298	
MC74HC299	National	MM74HC299	
	RCA	**CD74HC299**	**1149**
	SGS	M74HC299	
	Signetics	**74HC299**	**1158**
	Universal	US74HC299	
MC74HC30	Hitachi	HD74HC30	
	National	MM74HC30	
	RCA	**CD74HC30**	**1149**
	SPI	SP74HC30	
	SGS	M74HC30	
	Signetics	**74HC30**	**1156**
	TI	SN74HC30	
	Universal	US74HC30	
MC74HC32	Hitachi	HD74HC27	
		HD74HC32	
	National	MM74HC32	
	RCA	**CD74HC32**	**1149**
	SPI	SP74HC32	
	SGS	M74HC32	
	Signetics	**74HC32**	**1156**
	TI	SN74HC32	
	Toshiba	**TC40H032**	**1363**
	Universal	US74HC32	
MC74HC354	Hitachi	HD74HC354	
	National	MM74HC354	
	RCA	**CD74HC354**	**1150**
	SGS	M74HC354	
	Signetics	**74HC354**	**1158**
	TI	SN74HC354	
	Universal	US74HC354	
MC74HC356	Hitachi	HD74HC356	
	National	MM74HC356	
	RCA	**CD74HC356**	**1150**
	SGS	M74HC356	
	Signetics	**74HC356**	**1158**
	TI	SN74HC356	
	Universal	US74HC356	
MC74HC365	Hitachi	HD74HC365	
	National	MM74HC365	
	RCA	**CD74HC365**	**1149**
	SPI	SP74HC365	
	SGS	M74HC365	
	TI	SN74HC365	
	Universal	US74HC365	
MC74HC366	Hitachi	HD74HC366	
	National	MM74HC366	
	RCA	**CD74HC366**	**1149**
	SPI	SP74HC366	
	SGS	M74HC366	
	Signetics	**74HC366**	**1158**
	TI	SN74HC366	
	Universal	US74HC366	
MC74HC367	Hitachi	HD74HC367	
	National	MM74HC367	
	Nitron	NC74HC367	
	RCA	**CD74HC367**	**1149**
	SPI	SP74HC367	
	SGS	M74HC367	
	Signetics	**74HC367**	**1158**
	TI	SN74HC367	
	Universal	US74HC367	
MC74HC368	Hitachi	HD74HC368	
	National	MM74HC368	
	RCA	**CD74HC368**	**1149**
	SGS	M74HC368	
	Signetics	**74HC368**	**1158**
	TI	SN74HC368	
	Universal	US74HC368	
MC74HC373	Hitachi	HD74HC373	
	Mitel	MD74HC373	
	National	MM74HC373	
	Nitron	NC74HC373	
	RCA	**CD74HC373**	**1150**
	SPI	SP74HC373	
	SGS	M74HC373	
	Signetics	**74HC373**	**1158**
	SSS	SS74HC373	
	Supertex	SI74HC373	
	TI	SN74HC373	
	Universal	US74HC373	
	Zytrex	ZX74HC373	
MC74HC374	Hitachi	HD74HC374	
	Mitel	MD74HC374	
	National	MM74HC374	
	Nitron	NC74HC374	
	RCA	**CD74HC374**	**1149**
	SPI	SP74HC374	
	SGS	M74HC374	
	Signetics	**74HC374**	**1158**
	SSS	SS74HC374	
	TI	SN74HC374	
			(Continued)
MC74HC374	Universal	US74HC374	
	Zytrex	ZX74HC374	
MC74HC375	Hitachi	HD74HC375	
	TI	SN74HC375	
	Toshiba	**TC74HC375**	**1363**
	Universal	US74HC375	
MC74HC377	Hitachi	HD74HC377	
	RCA	**CD74HC377**	**1149**
	SGS	M74HC377	
	Signetics	**74HC377**	**1158**
	TI	SN74HC377	
	Universal	US74HC377	
MC74HC386	TI	SN74HC386	
	Toshiba	**TC74HC386**	**1363**
MC74HC390	Hitachi	HD74HC390	
	National	MM74HC390	
	RCA	**CD74HC390**	**1150**
	SPI	SP74HC390	
	SGS	M74HC390	
	Signetics	**74HC390**	**1158**
	TI	SN74HC390	
	Universal	US74HC390	
MC74HC393	Hitachi	HD74HC393	
	National	MM74HC393	
	Nitron	NC74HC393	
	RCA	**CD74HC393**	**1150**
	SPI	SP74HC393	
	SGS	M74HC393	
	Signetics	**74HC393**	**1158**
	TI	SN74HC393	
	Universal	US74HC393	
MC74HC4002	National	MM74HC4002	
	RCA	**CD74HC4002**	**1149**
	SPI	SP74HC4002	
	SGS	M74HC4002	
	Signetics	**74HC4002**	**1160**
	TI	SN74HC4002	
	Universal	US74HC4002	
MC74HC4016	**RCA**	**CD74HC4016**	**1149**
	Universal	US74HC4016	
MC74HC4017	National	MM74HC4017	
	RCA	**CD74HC4017**	**1150**
	SPI	SP74HC4017	
	SGS	M74HC4017	
	Signetics	**74HC4017**	**1160**
	TI	SN74HC4017	
	Universal	US74HC4017	
MC74HC4020	Hitachi	HD74HC4020	
	National	MM74HC4020	
	RCA	**CD74HC4020**	**1150**
	SPI	SP74HC4020	
	SGS	M74HC4020	
	Signetics	**74HC4020**	**1160**
	TI	SN74HC4020	
	Universal	US74HC4020	
MC74HC4024	Hitachi	HD74HC4024	
	RCA	**CD74HC4024**	**1150**
	SGS	M74HC4024	
	Signetics	**74HC4024**	**1160**
	TI	SN74HC4024	
	Universal	US74HC4024	
MC74HC4040	Hitachi	HD74HC4040	
	National	MM74HC4040	
	RCA	**CD74HC4040**	**1150**
	SPI	SP74HC4040	
	SGS	M74HC4040	
	Signetics	**74HC4040**	**1160**
	TI	SN74HC4040	
	Universal	US74HC4040	
MC74HC4046	**RCA**	**CD74HC4046**	**1150**
	Signetics	74HC4046	
MC74HC4049	National	MM74HC4049	
	RCA	**CD74HC4049**	**1149**
	SGS	M74HC4049	
	Signetics	**74HC4049**	**1160**
	TI	SN74HC4049	
	Universal	US74HC4049	
MC74HC4051	**RCA**	**CD74HC4051**	**1150**
	SGS	M74HC4051	
	Signetics	**74HC4051**	**1160**
	TI	SN74HC4051	
	Universal	US74HC4051	
MC74HC4052	**RCA**	**CD74HC4052**	**1150**
	SGS	M74HC4052	
	Signetics	**74HC4052**	**1160**
	TI	SN74HC4052	
	Universal	US74HC4052	
MC74HC4053	**RCA**	**CD74HC4053**	**1150**
	SGS	M74HC4053	
	Signetics	**74HC4053**	**1160**
	TI	SN74HC4053	
	Universal	US74HC4053	
MC74HC4060	National	MM74HC4060	
	RCA	**CD74HC4060**	**1150**
	SGS	M74HC4060	
	Signetics	**74HC4060**	**1160**
	TI	SN74HC4060	
	Universal	US74HC4060	
MC74HC4066	RCA	CE74HC4066	
	SGS	M74HC4066	
	Signetics	PC74HC4066	
	TI	SN74HC4075	
	Universal	US74HC4066	
MC74HC4075	AMD	AM2167	
	Cypress	CY7C167	
	Inmos	IMS1400	
	Panasonic	MN74HC4075	
	RCA	**CD74HC4075**	**1149**
	SGS	M74HC4075	
	Signetics	PC74HC4075	
	Toshiba	**TC74HC4075**	**1363**
	Universal	US74HC4075	
MC74HC4078	National	MM74HC4078	
	SPI	SP74HC4078	
	SGS	M74HC4078	
	TI	SN74HC4078A	
	Toshiba	**TC74HC4078**	**1363**
	Universal	US74HC4078	
MC74HC42	Hitachi	HD74HC42	
	National	MM74HC42	
	Nitron	NC74HC42	
	RCA	**CD74HC42**	**1150**
	SPI	SP74HC42	
	SGS	M74HC42	
	Signetics	**74HC42**	**1156**
	TI	SN74HC42	
	Universal	US74HC42	
MC74HC423	**RCA**	**CD74HC423**	**1150**
	SGS	M74HC423	
	Signetics	**74HC423**	**1158**
MC74HC4316	**RCA**	**CD74HC4316**	**1149**
MC74HC4353	**RCA**	**CD74HC4353**	**1150**
MC74HC4514	Hitachi	HD74HC4514	
	National	MM74HC4514	
	RCA	**CD74HC4514**	**1150**
	SGS	M74HC4514	
	Signetics	**74HC4514**	**1161**
	TI	SN74HC4514	
	Universal	US74HC4514	
MC74HC4538	National	MM74HC4538	
	RCA	**CD74HC4538**	**1150**
	SGS	M74HC4538	
	Signetics	**74HC4538**	**1161**
	Universal	US74HC4538	
MC74HC4543	Cypress	CY7C172	
	IDT	IDT71682	
	National	MM74HC4543	
	RCA	**CD74HC4543**	**1150**
	SGS	M74HC4543	
	Signetics	PC74HC4543	
	Toshiba	**TC74HC4543**	**1363**
	Universal	US74HC4543	
MC74HC51	Hitachi	HD74HC51	
	National	MM74HC51	
	Nitron	NC74HC51	
	TI	SN74HC51	
	Toshiba	**TC74HC51**	**1363**
	Universal	US74HC51	
MC74HC533	Hitachi	HD74HC533	
	National	MM74HC533	
	RCA	**CD74HC533**	**1150**
	SPI	SP74HC533	
	SGS	M74HC533	
	Signetics	**74HC533**	**1159**
	SSS	SS74HC533	
	TI	SN74HC533	
	Universal	US74HC533	
MC74HC534	Hitachi	HD74HC534	
	National	MM74HC534	
	RCA	**CD74HC534**	**1149**
	SPI	SP74HC534	
	SGS	M74HC534	
	Signetics	**74HC534**	**1159**
	SSS	SS74HC534	
	TI	SN74HC534	
	Universal	US74HC534	
MC74HC540	Hitachi	HD74HC540	
	RCA	**CD74HC540**	**1149**
	SGS	M74HC540	
	Signetics	**74HC540**	**1159**
	SSS	SS74HC540	
	TI	SN74HC540	
	Toshiba	**TC74HC540**	**1363**
	Universal	US74HC540	

◆ Discontinued

The manufacturers report their devices can be used as direct replacements.
Performance details often differ, so compare the specifications considering your requirements.

Motorola Semiconductor Products (Cont'd)

Manufacturer Device	Replacement Source	Device	IC Master Page
MC74HC541	Hitachi	HD74HC541	
	RCA	**CD74HC541**	**1149**
	SGS	M74HC541	
	Signetics	**74HC541**	**1159**
	SSS	SS74HC541	
	TI	SN74HC541	
	Universal	US74HC541	
MC74HC563	Hitachi	HD74HC563	
	National	MM74HC563	
	RCA	**CD74HC563**	**1150**
	SPI	SP74HC563	
	SGS	M74HC563	
	Signetics	**74HC563**	**1159**
	SSS	SS74HC563	
	TI	SN74HC563	
	Universal	US74HC563	
MC74HC564	Hitachi	HD74HC564	
	National	MM74HC564	
	RCA	**CD74HC564**	**1149**
		MC74HC564	
	SGS	M74HC564	
	Signetics	**74HC564**	**1159**
	SSS	SS74HC564	
	TI	SN74HC564	
	Universal	US74HC564	
MC74HC573	Hitachi	HD74HC573	
	National	MM74HC573	
	RCA	**CD74HC573**	**1150**
	SPI	SP74HC573	
	SGS	M74HC573	
	Signetics	**74HC573**	**1159**
	SSS	SS74HC573	
	TI	SN74HC573	
	Toshiba	**TC74HC573**	**1363**
	Universal	US74HC573	
MC74HC574	Hitachi	HD74HC574	
	National	MM74HC574	
	RCA	**CD74HC574**	**1149**
	SPI	SP74HC574	
	SGS	M74HC574	
	Signetics	**74HC574**	**1159**
	SSS	SS74HC574	
	TI	SN74HC574	
	Universal	US74HC574	
MC74HC58	National	MM74HC58	
	TI	SN74HC58	
	Universal	US74HC58	
MC74HC589	TI	SN74HC589	
	Universal	US74HC589	
MC74HC590	Hitachi	HD74HC590	
	TI	SN74HC590	
	Universal	US74HC590	
MC74HC592	Hitachi	HD74HC592	
	TI	SN74HC592	
	Universal	US74HC592	
MC74HC593	Hitachi	HD74HC593	
	TI	SN74HC593	
	Universal	US74HC593	
MC74HC595	Cypress	CY7C164	
	Hitachi	HD74HC595	
	Inmos	IMS1620	
	NEC	MPD4362	
	SGS	M74HC595	
	TI	SN74HC595	
	Universal	US74HC595	
MC74HC640	Hitachi	HD74HC640	
	National	MM74HC640	
	Nitron	NC74HC640	
	RCA	**CD74HC640**	**1149**
	Signetics	**74HC640**	**1159**
	SSS	SS74HC640	
	TI	SN74HC640	
	Universal	US74HC640	
MC74HC643	Hitachi	HD74HC643	
	National	MM74HC643	
	RCA	**CD74HC643**	**1149**
	SGS	M74HC643	
	Signetics	**74HC643**	**1159**
	SSS	SS74HC643	
	TI	SN74HC643	
	Universal	US74HC643	
MC74HC646	Hitachi	HD74HC646	
	National	MM74HC646	
	Nitron	NC74HC646	
	RCA	**CD74HC646**	**1149**
	SGS	M74HC646	
	Signetics	**74HC646**	**1159**
	TI	SN74HC646	
	Universal	US74HC646	
MC74HC648	Hitachi	HD74HC648	
	National	MM74HC648	
	RCA	**CD74HC648**	**1149**
	SGS	M74HC648	
	Signetics	**74HC648**	**1159**
	TI	SN74HC648	
	Universal	US74HC648	
MC74HC651	Hitachi	HD74HC651	
	TI	SN74HC651	
	Toshiba	**TC74HC651**	**1363**
MC74HC652	Hitachi	HD74HC652	
	TI	SN74HC652	
	Toshiba	**TC74HC652**	**1363**
MC74HC658	TI	SN74HC658	
MC74HC659	TI	SN74HC659	
MC74HC664	TI	SN74HC664	
MC74HC665	TI	SN74HC665	
MC74HC688	National	MM74HC688	
	RCA	**CD74HC688**	**1150**
	SGS	M74HC688	
	Signetics	74HC688	
	TI	SN74HC688	
	Toshiba	**TC74HC688**	**1363**
MC74HC73	Hitachi	HD74HC73	
	National	MM74HC73	
	RCA	**CD74HC73**	**1149**
	SPI	SP74HC73	
	SGS	M74HC73	
	Signetics	**74HC73**	**1156**
	TI	SN74HC73	
	Toshiba	**TC74HC73**	**1363**
	Universal	US74HC73	
MC74HC74	Hitachi	HD74HC74	
	National	MM74HC74	
	Nitron	NC74HC74	
	RCA	**CD74HC74**	**1149**
	SPI	SP74HC74	
	SGS	M74HC74	
	Signetics	**74HC74**	**1156**
	TI	SN74HC74	
	Toshiba	**TC40H074**	**1363**
	Universal	US74HC74	
MC74HC75	Hitachi	HD74HC75	
	National	MM74HC75	
	RCA	**CD74HC75**	**1150**
	SPI	SP74HC75	
	SGS	M74HC75	
	Signetics	**74HC75**	**1156**
	TI	SN74HC75	
	Toshiba	**TC74HC75**	**1363**
	Universal	US74HC75	
MC74HC76	Hitachi	HD74HC76	
	National	MM74HC76	
	SPI	SP74HC76	
	SGS	M74HC76	
	Signetics	74HC76	
	TI	SN74HC76	
	Toshiba	**TC40H076**	**1363**
	Universal	US74HC76	
MC74HC85	National	MM74HC85	
	RCA	**CD74HC85**	**1150**
	SPI	SP74HC85	
	SGS	M74HC85	
	Signetics	**74HC85**	**1156**
	TI	SN74HC85	
	Universal	US74HC85	
MC74HC86	Hitachi	HD74HC86	
	National	MM74HC86	
	RCA	**CD74HC86**	**1149**
	SPI	SP74HC86N	
	SGS	M74HC86	
	Signetics	**74HC86**	**1156**
	TI	SN74HC86	
	Universal	US74HC86	
◆MC74HC93	Nitron	NC74HC93	
	SPI	SP74HC93	
MC74HCT00	**RCA**	**CD74HCT00**	**1149**
MC74HCT04	**RCA**	**CD74HCT04**	**1149**
	SGS	M74HCT04	
	Universal	US74HCT04	
MC74HCT125	Hitachi	HD74HCT125	
	TI	SN74HCT125	
	Universal	US74HCT125	
MC74HCT126	Hitachi	HD74HCT126	
	TI	SN74HCT126	
	Universal	US74HCT126	
MC74HCT138	CTI	74HCT138	
	IDT	IDT74HCT138	
	Mitel	MD74HCT138	
	Nitron	NC74HCT138	
	Plessey	MV74HCT138	
	RCA	**CD74HCT138**	**1150**
	SPI	SP74HCT138	
	SGS	M74HCT138	
	Signetics	**74HCT138**	**1157**
	SSS	SS74HCT138	
	TI	SN74HCT138	
	Toshiba	**TC74HCT138**	**1363**
	Zytrex	ZX74HCT138-2	
MC74HCT157	Nitron	NC74HCT157	
	RCA	**CD74HCT157**	**1150**
	Signetics	**74HCT157**	**1157**
	Universal	US74HCT157	
MC74HCT158	**RCA**	**CD74HCT158**	**1150**
	Signetics	**74HCT158**	**1157**
	Universal	US74HCT158	
MC74HCT240	CTI	74HCT240	
	Hitachi	HD74HCT240	
	Micrel	MIC74HCT240	
	MicroTech	74HCTR240	
	Mitel	MD74HCT240	
	National	MM74HCT240	
	Nitron	NC74HCT240	
	Plessey	MV74HCT240	
	RCA	**CD74HCT240**	**1149**
	SPI	SP74HCT240	
	SGS	M74HCT240	
	Signetics	**74HCT240**	**1157**
	SSS	SS74HCT240	
	Supertex	SI74HCT240	
	TI	SN74HCT240	
	Toshiba	**TC74HCT240**	**1363**
	Universal	US74HCT240	
	Zytrex	ZX74HCT240-2	
MC74HCT241	CTI	74HCT241	
	Hitachi	HD74HCT241	
	Micrel	MIC74HCT241	
	MicroTech	74HCTR241	
	Mitel	MD74HCT241	
	National	MM74HCT241	
	Nitron	NC74HCT241	
	Plessey	MV74HCT241	
	RCA	**CD74HCT241**	**1149**
	SPI	SP74HCT241	
	SGS	M74HCT241	
	Signetics	**74HCT241**	**1157**
	SSS	SS74HCT241	
	Supertex	SI74HCT241	
	TI	SN74HCT241	
	Toshiba	**TC74HCT241**	**1363**
	Universal	US74HCT241	
	Zytrex	ZX74HCT241-2	
MC74HCT244	CTI	74HCT244	
	Hitachi	HD74HCT244	
	Micrel	MIC74HCT244	
	MicroTech	74HCTR244	
	Mitel	MD74HCT244	
	National	MM74HCT244	
	Nitron	NC74HCT244	
	Plessey	MV74HCT244	
	RCA	**CD74HCT244**	**1149**
	SPI	SP74HCT244	
	SGS	M74HCT244	
	Signetics	**74HCT244**	**1158**
	SSS	SS74HCT244	
	Supertex	SI74HCT244	
	TI	SN74HCT244	
	Toshiba	**TC74HCT244**	**1363**
	Universal	US74HCT244	
	Zytrex	ZX74HCT244-2	
MC74HCT245	CTI	74HCT245	
	GTEMicro	G74SC245	
	Hitachi	HD74HCT245	
	Micrel	MIC74HCT245	
	MicroTech	74HCTR245	
	Mitel	MD74HCT245	
	National	MM74HCT245	
	Plessey	MV74HCT245	
		MV74SC245	
	RCA	**CD74HCT245**	**1149**
	SPI	SP74HCT245	
	SGS	M74HCT245	
	Signetics	**74HCT245**	**1158**
	SSS	SS74HCT245	
	TI	SN74HCT245	
	Toshiba	**TC74HCT245**	**1363**
	Universal	US74HCT245	
MC74HCT257	Nitron	NC74HCT257	
	RCA	**CD74HCT257**	**1150**
	Signetics	**74HCT257**	**1158**
	Universal	US74HCT257	
MC74HCT258	**RCA**	**CD74HCT258**	**1150**
MC74HCT373	CTI	74HCT373	
	GTEMicro	G74SC373	
	Hitachi	HD74HCT373	
	Micrel	MIC74HCT373	
	MicroTech	74HCTR373	
	Mitel	MD74HCT373	
	National	MM74HCT373	
	Nitron	NC74HCT373	
	Plessey	MV74HCT373	
		MV74SC373	
	RCA	**CD74HCT373**	**1150**
	SPI	SP74HCT373	
	SGS	M74HCT373	
	Signetics	**74HCT373**	**1158**
	SSS	SS74HCT373	
	Supertex	SI74HCT373	
	TI	SN74HCT373	
	Toshiba	**TC74HCT373**	**1363**
	Universal	US74HCT373	
	Zytrex	ZX74HCT373-2	
MC74HCT374	CTI	74HCT374	
	GTEMicro	G74SC374	
	Hitachi	HD74HCT374	
	Micrel	MIC74HCT374	
	MicroTech	74HCTR374	
	Mitel	MD74HCT374	
	National	MM74HCT374	
	Nitron	NC74HCT374	
	Plessey	MV74HCT374	
		MV74SC374	
	RCA	CD74HCT374	
	SPI	SP74HCT374	
	SGS	M74HCT374	
	Signetics	**74HCT374**	**1158**
	SSS	SS74HCT374	
	Supertex	SI74HCT374	
	TI	SN74HCT374	
	Toshiba	**TC74HCT374**	**1363**
	Universal	US74HCT374	
	Zytrex.	ZX74HCT374-2	
MC74HCT533	CTI	74HCT533	
	Hitachi	HD74HCT533	
	Micrel	MIC74HCT533	
	MicroTech	74HCTR533	
	Plessey	MV74HCT533	
	RCA	**CD74HCT533**	**1150**
	Signetics	**74HCT533**	**1159**
	SSS	SS74HCT533	
	TI	SN74HCT533	
	Universal	US74HCT533	
	Zytrex	ZX74HCT533	
MC74HCT534	CTI	74HCT534	
	Hitachi	HD74HCT534	
	Micrel	MIC74HCT534	
	MicroTech	74HCTR534	
	Plessey	MV74HCT534	
	RCA	CD74HCT534	
	Signetics	**74HCT534**	**1159**
	SSS	SS74HCT534	
	TI	SN74HCT534	
	Universal	US74HCT534	
	Zytrex	ZX74HCT534-2	
MC74HCT540	CTI	74HCT540	
	Hitachi	HD74HCT540	
	Micrel	MIC74HCT540	
	MicroTech	74HCTR540	
	Mitel	MD74HCT540	
	Plessey	MV74HCT540	
	RCA	**CD74HCT540**	**1149**
	SPI	SP74HCT540	
	SGS	M74HCT540	
	Signetics	**74HCT540**	**1159**
	SSS	SS74HCT540	
	TI	SN74HCT540	
	Toshiba	**TC74HCT540**	**1363**
	Universal	US74HCT540	
	Zytrex	ZX74HCT540-2	
MC74HCT541	CTI	74HCT541	
	Hitachi	HD74HCT541	
	Micrel	MIC74HCT541	
	MicroTech	74HCTR541	
	Mitel	MD74HCT541	
	Plessey	MV74HCT541	
	RCA	**CD74HCT541**	**1149**
	SPI	SP74HCT541	
	SGS	M74HCT541	
	Signetics	**74HCT541**	**1159**
	SSS	SS74HCT541	
	TI	SN74HCT541	
	Toshiba	**TC74HCT541**	**1363**
	Universal	US74HCT541	
	Zytrex	ZX74HCT541-2	
MC74HCT563	CTI	74HCT563	
	Hitachi	HD74HCT563	

(Continued)

◆ Discontinued

Bold face device numbers indicate manufacturers data is provided in the IC Master on the pages noted.

Motorola Semiconductor Products (Cont'd)

Manufacturer Device	Replacement Source	Device	IC Master Page
MC74HCT563	Micrel	MIC74HCT563	
	MicroTech	74HCTR563	
	Plessey	MV74HCT563	
	RCA	**CD74HCT563**	**1150**
	SGS	M74HCT563	
	Signetics	**74HCT563**	**1159**
	SSS	SS74HCT563	
	TI	SN74HCT563	
	Toshiba	**TC74HCT563**	**1363**
	Universal	US74HCT563	
MC74HCT564	CTI	74HCT564	
	Hitachi	HD74HCT564	
	Micrel	MIC74HCT564	
	MicroTech	74HCTR564	
	Plessey	MV74HCT564	
		MV74HCT573	
	RCA	CD74HCT564	
	SGS	M74HCT564	
	Signetics	**74HCT564**	**1159**
	SSS	SS74HCT564	
	TI	SN74HCT564	
	Toshiba	**TC74HCT564**	**1363**
	Universal	US74HCT564	
MC74HCT573	CTI	74HCT573	
	Hitachi	HD74HCT573	
	Micrel	MIC74HCT573	
	MicroTech	74HCTR573	
	Mitel	MD74HCT573	
	RCA	**CD74HCT573**	**1150**
	SPI	SP74HCT573	
	SGS	M74HCT573	
	Signetics	**74HCT573**	**1159**
	SSS	SS74HCT573	
	TI	SN74HCT573	
	Toshiba	TC74HCT573	
	Universal	US74HCT573	
MC74HCT574	CTI	74HCT574	
	Hitachi	HD74HCT574	
	MicroTech	74HCTR574	
	Mitel	MD74HCT574	
	Plessey	MV74HCT574	
	RCA	CD74HCT574	
	SPI	SP74HCT574	
	SGS	M74HCT574	
	Signetics	**74HCT574**	**1159**
	SSS	SS74HCT574	
	TI	SN74HCT574	
	Toshiba	**TC74HCT574**	**1363**
	Universal	US74HCT574	
		US75HCT574	
MC74HCT640	Hitachi	HD74HCT640	
	MicroTech	74HCTR640	
	Nitron	NC74HCT640	
	RCA	**CD74HCT640**	**1149**
	SGS	M74HCT640	
	Signetics	**74HCT640**	**1159**
	SSS	SS74HCT640	
	TI	SN74HCT640	
	Toshiba	**TC74HCT640**	**1363**
	Universal	US74HCT640	
	Zytrex	ZX74HCT640-2	
MC74HCT643	Hitachi	HD74HCT643	
	MicroTech	74HCTR643	
	RCA	**CD74HCT643**	**1149**
	SGS	M74HCT643	
	Signetics	**74HCT643**	**1159**
	TI	SN74HCT643	
	Toshiba	**TC74HCT643**	**1363**
	Universal	US74HCT643	
	Zytrex	ZX74HCT643-2	
MC74HCT651	Hitachi	HD74HCT651	
	TI	SN74HCT651	
	Toshiba	**TC74HCT651**	**1363**
MC74HCT652	Hitachi	HD74HCT652	
	TI	SN74HCT652	
	Toshiba	**TC74HCT652**	**1363**
MC74HCT658	TI	SN74HCT658	
MC74HCT659	TI	SN74HCT659	
MC74HCT665	TI	SN74HCT665	
MC74HCU04	RCA	CD74HCU04	
	SGS	M74HCU04	
	Signetics	74HCU04	
MC74HCY351	**RCA**	**CD74HC4351**	**1150**
MC75107	Fairchild	75107	
	National	DS75107	
		LM75107A	
	TI	SN75107B	
MC75108	Fairchild	75108	
	National	DS75108	
MC75108	National	LM75108A	
	TI	SN75108B	
MC75109	TI	SN75109A	
MC75110	Fairchild	75110	
	National	LM75110	
	TI	SN75110A	
MC75125	National	DS75125	
	TI	SN75125	
MC75127	National	DS75127	
	TI	SN75127	
MC75128	National	DS75128	
	TI	SN75128	
MC75129	National	DS75129	
	TI	SN75129	
◆MC75140	TI	SN75140A	
MC7520	Fairchild	7520	
	TI	SN7520	
MC7521	Fairchild	7521	
	National	LM7521	
	TI	SN7521	
MC7522	TI	SN7522	
MC7523	National	LM7523	
	Raytheon	RC7523	
	TI	SN7523	
MC75235	TI	SN75235	
MC7524	Fairchild	75S24	
	National	DS75S24	
	Signetics	7524	
	TI	SN75224	
		SN7524	
MC7525	Fairchild	7525	
	National	LM7525	
MC7528	Raytheon	RC7528	
	TI	SN7528	
	ThomsonCSF	SFC2528	
MC7529	Fairchild	7529	
	National	LM7529	
	Raytheon	RC7529	
MC75325	National	DS75325	
	SiliconG	SG55327	
		SG75325	
	TI	**SN55327**	**722**
		SN75325	
MC7535	National	LM7535	
MC75358	TI	SN75368	
◆MC75365	National	DS75365	
	TI	SN75365	
◆MC75368	Motorola	MC75358	
	TI	SN75368	
MC7538	Fairchild	7538	
	National	LM7538	
MC7539	Fairchild	7539	
	National	LM7539	
MC75401	Fairchild	75461	
	National	DS75461	
	SiliconG	SG75461	
	TI	SN75461	
MC75402	Fairchild	75462	
	National	DS75462	
	SiliconG	SG75462	
	TI	SN75462	
MC75403	National	DS75463	
	SiliconG	SG75463	
	TI	SN75463	
MC75404	National	DS75464	
		SG75464	
	SiliconG	SG75464	
	TI	SN75464	
◆MC75450	Fairchild	75450	
	National	DS75450	
	SiliconG	SG75450	
◆MC75451	Fairchild	75451	
	National	DS75451	
	SiliconG	SG75451	
◆MC75452	Fairchild	75452	
	National	DS75452	
	SiliconG	SG75452	
	TI	SN75452B	
MC75453	Fairchild	75453	
	National	DS75453	
		LM75453	
	SiliconG	SG75453	
	TI	SN75453B	
◆MC75454	National	DS75454	
	SiliconG	SG75454	
	TI	SN75454B	
MC75460	National	DS75460	
	SiliconG	SG75460	
	TI	SN75460	
◆MC75461	Fairchild	75461	
	Motorola	MC75401	
	National	DS75461	
◆MC75461	SiliconG	SG75461	
	TI	SN75461	
◆MC75462	Fairchild	75462	
	Motorola	MC75402	
	National	DS75462	
	SiliconG	SG75462	
	TI	SN75462	
◆MC75463	Motorola	MC75403	
	National	DS75463	
	SiliconG	SG75463	
	TI	SN75463	
◆MC75464	Motorola	MC75404	
	National	DS75464	
		SG75464	
	SiliconG	SG75464	
	TI	SN75464	
MC7802	Fairchild	μA78L02	
	TI	μA78L02	
MC7805	Fairchild	UA7805	
MC7806	Lambda	LMC7806	
		LμA7806	
	SiliconG	SG340-6	
		SG7806	
	TI	μA7806	
	ThomsonCSF	μA7806	
	Samsung	MC7806	
MC7808	Lambda	LMC7808	
		LμA7808	
	NEC	μPC7808	
	SiliconG	SG340-8	
		SG7808	
	TI	μA7808	
	ThomsonCSF	μA7808	
	Samsung	MC7808	
MC7812	Fairchild	μA7812	
	IPS	**IP140-12**	**3599**
		IP340-12	**3599**
		IP7812	**3599**
	Lambda	LMC7812	
		LμA7812	
	National	LM7812	
	NEC	μPC7812	
	SGS	L7812	
	SiliconG	SG340-12	
		SG7812	
	TI	μA7812	
	Toshiba	TA78012	
	Samsung	MC7812	
	Unitrode	UC7812	
MC7815	Fairchild	μA7815	
		μA78L15	
	IPS	**IP140-15**	**3599**
		IP340-15	**3599**
		IP7815	**3599**
	Lambda	LAS1515	
		LMC7815	
		LμA7815	
	Motorola	MC78L15	
	National	LM340-15	
		LM340LA-15	
		LM340T-15	
		LM7815	
		LM78L15	
	NEC	μPC7815	
		μPC78L15	
	SGS	L7815	
	SiliconG	SG340-15	
		SG7815	
	TI	LM340-15	
		μA7815	
		μA78L15	
	ThomsonCSF	μA7815	
	Toshiba	TA78015	
	Samsung	MC7815	
	Unitrode	UC7815	
MC7818	SGS	L7818	
	Samsung	MC7818	
MC7820	SiliconG	SG7820	
MC7824	Lambda	LMC7824	
		LμA7824	
	NEC	μPC7824	
	SGS	L7824	
	SiliconG	SG7824	
	TI	LM340-24	
		μA7824	
	ThomsonCSF	μA7824	
	Samsung	MC7824	
◆MC78L02	Fairchild	μA78L02	
	Motorola	MC7802	
	TI	μA78L02	
MC78L05	Fairchild	μA78L05	
	National	LM340LA-5	
MC78L05	National	LM78L05	
	NEC	μPC78L05	
	TI	μA78L05	
	ThomsonCSF	μA7805	
◆MC78L06	Fairchild	μA78L06	
	Motorola	MC78L06	
	TI	μA78L06	
		μA87L06	
	Fairchild	μA78L06	
	TI	μA78L06	
		μA87L06	
MC78L08	NEC	μPC78L08	
	TI	μA78L08	
MC78L12	Fairchild	μA78L12	
	National	LM340LA-12	
		LM78L12	
	NEC	μPC78L12	
	TI	μA78L12	
	ThomsonCSF	SFC2812	
		μA7812	
MC78L15	Fairchild	μA7815	
		μA78L15	
	IPS	**IP140-15**	**3599**
		IP340-15	**3599**
		IP7815	**3599**
	Lambda	LAS1515	
		LMC7815	
		LμA7815	
	Motorola	**MC7815**	**3624**
	National	LM340-15	
		LM340LA-15	
		LM340T-15	
		LM7815	
		LM78L15	
	NEC	μPC7815	
		μPC78L15	
	SGS	L7815	
	SiliconG	SG340-15	
		SG7815	
	TI	LM340-15	
		μA7815	
		μA78L15	
	ThomsonCSF	μA7815	
	Toshiba	TA78015	
	Samsung	MC7815	
	Unitrode	UC7815	
MC78M05	Fairchild	μA78M05	
	National	LM341-5	
		LM342-05	
		LM78M05	
	NEC	μPC78M05	
	Sanyo	L78M05	
	SGS	L78M05CV	
	TI	μA78M05	
	Samsung	MC78M05	
MC78M06	Fairchild	μA78M06	
	Sanyo	L78M06	
	SGS	L78M06CV	
	TI	μA78M06	
	Samsung	MC78M06	
MC78M08	Fairchild	μA78M08	
	NEC	μPC78M08	
	Sanyo	L78M08	
	SGS	L78M08CV	
	TI	μA78M08	
	Samsung	MC78M08	
MC78M12	Fairchild	μA78M12	
	National	LM341-12	
		LM342-12	
		LM78M12	
	NEC	μPC78M12	
	Sanyo	L78M12	
	SGS	L78M12CV	
	Samsung	MC78M12	
MC78M15	Fairchild	μA78M15	
	National	LM341-15	
		LM342-15	
		LM78M15	
	NEC	μPC78M15	
	Sanyo	L78M15	
	SGS	L78M15CV	
	Samsung	MC78M15	
MC78M18	Sanyo	L78M18	
	Samsung	MC78M18	
MC78M20	TI	μA78M20	
MC78M24	Fairchild	μA78M24	
	Sanyo	L78M24	
	SGS	L78M24CV	
	TI	μA78M24	
	Samsung	MC78M24	
MC78T05	Fairchild	SH123	
		UA138	

(Continued)

◆ Discontinued

The manufacturers report their devices can be used as direct replacements.
Performance details often differ, so compare the specifications considering your requirements.

Motorola Semiconductor Products (Cont'd)

Manufacturer Device	Replacement Source	Device	IC Master Page
MC78T05	Fairchild	µA123	
	IPS	**IP123**	**3599**
	LinearTech	LM123	
	Motorola	**LM123**	**3622**
	National	LM123	
	SiliconG	SG123	
MC78T05C	Fairchild	SH0323	
		SH323	
		µA323	
		µA78H05	
	IPS	IP123-5	
		IP323	**3599**
	Lambda	LAS1405	
		LAS1905	
	LinearTech	LM323	
	Micropac	M78H05	
	Motorola	**LM323**	**3622**
	SiliconG	SG323	
	ThomsonCSF	LM323	
MC78T12	**IPS**	**IP123-12**	**3599**
		IP323-12	**3599**
MC78T15	**IPS**	**IP123-15**	**3599**
		IP323-15	**3599**
MC7902	Fairchild	µA7902	
	Lambda	LMC7902	
	Samsung	MC7902	
MC7905	Fairchild	MC7905	
	Lambda	LMC7905	
	SGS	L7905	
	SiliconG	SG7905	
	Samsung	MC7905	
MC7906	TI	µA7906	
	Samsung	MC7906	
MC7908	Fairchild	MC7908	
		µA7908	
		µA79M08	
	Lambda	LMC7908	
		LµA7908	
	SGS	L7908	
	SiliconG	SG7908	
	TI	µA7908	
		µA79M08	
	Samsung	MC7908	
MC7912	Fairchild	µA7912	
		µA79M12	
	IPS	**IP320-12**	**3599**
		IP7912	**3599**
	National	LM320MP12	
		LM7912	
		LM79M12	
	NEC	µPC7912	
	SGS	L7912	
	SiliconG	SG320P-12	
		SG7912	
	TI	LM320-12	
		µA7912	
	ThomsonCSF	µA7912	
	Samsung	MC7912	
	Unitrode	UC7912	
MC7915	Fairchild	µA7915	
	IPS	**IP320-15**	**3599**
		IP7915	**3599**
	National	LM320-15	
		LM320T15	
		LM7915	
	NEC	µPC7915	
	SGS	L7915	
	SiliconG	SG320-15	
		SG7915	
	TI	LM320-5	
		µA7915	
	ThomsonCSF	µA7915	
	Samsung	MC7915	
	Unitrode	UC7915	
MC7918	SGS	L7918	
	SiliconG	SG7918	
	TI	µA7918	
	Samsung	MC7918	
MC7924	TI	µA7924	
	Samsung	MC7924	
MC7952	**IPS**	**IP120-5**	**3599**
	National	LM320-5	
	SGS	L7952	
	SiliconG	SG320-5	
	TI	LM320-5	
	ThomsonCSF	TDB2905	
◆MC8233	Raytheon	RC8233	
◆MC8234	Raytheon	RC8234	
	Signetics	**N8234**	**1175**
MC830	**Fairchild**	**930**	**609,618,622,623**
		9930	
	Motorola	MC930	
	National	DM930	
	Raytheon	RM930	
◆MC83145	Fairchild	74145	
	National	DM74145	
	Signetics	**74145**	**1157**
	TI	SN74145	
◆MC8315	National	DM54141	
	Signetics	54141	
◆MC83150	Fairchild	74150	
	National	DM74150	
	Signetics	**74150**	**1157**
	TI	SN74150	
◆MC83153	Fairchild	74153	
	National	DM74153	
	Signetics	**74153**	**1157**
	TI	SN74153	
◆MC83165	Fairchild	74165	
	National	DM74165	
		DM8590	
	Signetics	**74165**	**1157**
	TI	SN74165	
◆MC83176	Fairchild	74176	
		96176	
	National	DM74176	
		DM8280	
	Raytheon	RC8280	
	Signetics	74176	
	TI	SN74176	
◆MC83177	Fairchild	74177	
	National	DM74177	
		DM8281	
	Raytheon	RC8281	
	Signetics	74177	
	TI	SN74177	
◆MC83179	Fairchild	74179	
	Raytheon	RC8271	
	Signetics	**N8271**	**1175**
	TI	SN74179	
◆MC83180	Fairchild	74180	
	National	DM74180	
	Signetics	**74180**	**1157**
	TI	SN74180	
◆MC8345	Fairchild	7445	
MC835	Fairchild	9135	
		9935	
	Motorola	MC935	
	National	DM935	
◆MC8352	Fairchild	7442	
MC837	**Fairchild**	**937**	**618**
		9937	
	Motorola	MC937	
	National	DM937	
◆MC8375	Fairchild	7475	
◆MC8394	Fairchild	7494	
	Hitachi	HD7494	
	Signetics	**7494**	**1156**
	TI	SN7494	
◆MC8396	Fairchild	7496	
	National	DM7496	
	Signetics	**7496**	**1156**
	TI	SN7496	
MC84HC4050	**RCA**	**CD74HC4050**	**1149**
	SGS	M74HC4050	
	Universal	US74HC4050	
MC8500	SiliconSys	SSI8500	
MC8502	SiliconSys	SSI8502	
MC8503	Fairchild	F9401	
	Signetics	9401	
MC851	Fairchild	9951	
	Motorola	MC852	
		MC951	
	Raytheon	RM951	
MC852	Fairchild	9951	
	Motorola	MC851	
		MC951	
	Raytheon	RM951	
MC8520	SiliconSys	SSI8520	
MC853	**Fairchild**	**9093**	**618**
	Motorola	MC953	
	National	DM9093	
	Raytheon	RM993	
MC855	Fairchild	9097	
	Motorola	MC955	
	National	DM9097	
	Raytheon	RM997	
MC856	Fairchild	9094	
	Motorola	MC956	
	National	DM9094	
			(Continued)
MC856	Raytheon	RM9094	
		RM994	
MC857	Fairchild	9157	
	Motorola	MC957	
	National	DM9567	
		DM957	
	Raytheon	RM957	
MC858	Fairchild	9158	
	Motorola	MC958	
	National	DM958	
	Raytheon	RM958	
◆MC8601	Fairchild	74122	
		9601	
	National	DM8601	
		DM9601	
	Raytheon	RF8601	
		RF9601	
	Signetics	**N8T22**	**1175**
		S8T22	
	TI	SN74122	
MC8T26	Hitachi	HD268T26	
	Motorola	**MC6880A**	**3210**
	Signetics	N8T26	
MC8T26A	Fairchild	µA8T26A	
	National	DS8T26A	
	Signetics	**N8T26A**	**1175**
	TI	N8T26A	
MC8T28	**Signetics**	**N8T28**	**1175**
MC8T95	**Motorola**	**MC6885**	**3209**
	National	DM8095	
	Signetics	**N8T95**	**1175**
	TI	SN74365	
◆MC9001	Fairchild	74H105	
		9001	
MC930	**Fairchild**	**930**	**609,618,622,623**
		9930	
	Motorola	MC830	
	National	DM930	
	Raytheon	RM930	
◆MC9300	Fairchild	9300	
	National	DM54195	
	TI	**SN54195**	**712**
◆MC9310	National	DM54160	
	Raytheon	RM9310	
	Signetics	54160	
	TI	**SN54160**	**712**
◆MC93178	Raytheon	RM8270	
	Signetics	S8270	
	TI	**SN54178**	**712**
◆MC93179	Raytheon	RM8271	
	Signetics	S8271	
	TI	**SN54179**	**712**
MC932	**Fairchild**	**932**	**618**
		9932	
	National	DM932	
	Raytheon	RM932	
◆MC9324	Fairchild	9324	
◆MC9328	Fairchild	9328	
MC933	Fairchild	9933	
	National	DM933	
◆MC9334	Fairchild	9334	
MC934	Raytheon	RM934	
MC935	Fairchild	9135	
		9935	
	Motorola	MC835	
	National	DM935	
MC936	**Fairchild**	**936**	**609,618,622,623**
		9936	
	National	DM936	
MC937	**Fairchild**	**937**	**618**
		9937	
	Motorola	MC837	
	National	DM937	
◆MC9375	**Fairchild**	**5475**	**616**
◆MC9383	Fairchild	5483A	
◆MC9394	**TI**	**SN5494**	**712**
◆MC9395	Fairchild	5495A	
◆MC9396	National	DM5496	
	Signetics	5496	
	TI	**SN5496**	**712**
MC941	Fairchild	9941	
	Raytheon	RM941	
MC943	Fairchild	SH2001	
MC944	**Fairchild**	**944**	**618**
		9944	
	National	DM944	
MC945	**Fairchild**	**945**	**618**
		9945	
	National	DM945	
MC946	**Fairchild**	**946**	**609,618,622,623**
		9946	
	National	DM946	
MC948	**Fairchild**	**948**	**618**
		9948	
	National	DM948	
MC949	**Fairchild**	**949**	**618**
	National	DM949	
	Raytheon	RM949	
MC950	Fairchild	9950	
MC951	Fairchild	9951	
	Motorola	MC851	
		MC852	
	Raytheon	RM951	
MC952	**Fairchild**	**9099**	**618**
	Raytheon	RM952	
		RM999	
MC953	**Fairchild**	**9093**	**618**
	Motorola	MC853	
	National	DM9093	
	Raytheon	RM993	
MC955	Fairchild	9097	
	Motorola	MC855	
	National	DM9097	
	Raytheon	RM997	
MC956	Fairchild	9094	
	Motorola	MC856	
	National	DM9094	
	Raytheon	RM9094	
		RM994	
MC957	Fairchild	9157	
	Motorola	MC857	
	National	DM9567	
		DM957	
	Raytheon	RM957	
MC958	Fairchild	9158	
	Motorola	MC858	
	National	DM958	
	Raytheon	RM958	
◆MC9602	Fairchild	9602	
	National	DM8602	
		DM9602	
	Raytheon	RF8602	
		RF9602	
◆MC9603	**Fairchild**	**54121**	**609,616,622,623**
	National	DM54121	
	Signetics	54121	
	TI	**SN54121**	**712**
MC961	Fairchild	9961	
	National	DM961	
MC962	**Fairchild**	**962**	**609,618,622,623**
		9962	
	National	DM962	
MC963	Fairchild	9963	
	National	DM963	
	Raytheon	RM963	
MCA500	National	MCA500	
MCM100416	**Signetics**	**100149**	**4166**
◆MCM10141	Fairchild	F10141	
	Motorola	**MC10141**	**1128**
	Signetics	**10141**	**1173,1174**
MCM10144	Fairchild	F10144	
	Signetics	10144	
	TI	SN10144	
MCM10145	Fairchild	F10145A	
	Signetics	10145	
MCM10146	AMD	AM10415	
	Fairchild	**F10415**	**4014**
	Fujitsu	MBM100470A	
		MBM10415	
	Hitachi	HM2110	
		HM2112	
	National	DM10415	
	Siemens	GXB10415	
	Signetics	10415	
MCM10147	TI	SN10147	
MCM10148	Hitachi	HD10148	
	Signetics	10148	
	TI	SN10148	
MCM10149	**Signetics**	**10149**	**1173,1174,4166**
MCM10152	National	DM10414	
MCM10422	**Fairchild**	**F10422**	**4014**
	Fujitsu	MBM10422A	
	National	DM10422	
	NEC	UPB10422	
	Signetics	10422	
MCM10470	AMD	AM10470	
	Fujitsu	MBM10470A	

(Continued)

◆ Discontinued

Bold face device numbers indicate manufacturers data is provided in the IC Master on the pages noted.

Motorola Semiconductor Products (Cont'd)

Manufacturer Device	Replacement Source	Device	IC Master Page
MCM10470	Hitachi	HM10470	
		HM2142	
	National	DM10470	
	NEC	UPB10470	
	Signetics	10470	
MCM10474	AMD	AM10474	
	Fairchild	F10474	
	Fujitsu	MBM10474A	
	Hitachi	HM10474	
	National	DM10474	
	NEC	UPB10474	
	Signetics	10474	
◆MCM146518	Fujitsu	8401	
	GouldAMI	6508	
	Harris	HM6508	
	Intersil	6508	
		IM6508-1	
	MicroPwr	6508	
	National	6508	
		74C929	
	NEC	443	
	RCA	6508	
	Toshiba	5508	
MCM2016	AMD	AM9128	
		AM9218	
	Cypress	CY7C128	
	Fujitsu	MB8128	
		MB8416	
	Harris	HM6116	
		HM6516	
	IDT	IDT6116	
	Intel	2128	
	MicroPwr	MP6116	
	Mitsubishi	M58275	
		M5M116	
		M5M5116	
		M5M5117	
		M5M5118	
		MS8725	
	Motorola	MCM2016H	
		MCM2128	
		MCM6116	**4119**
		MCM61L16	**4119**
		MCM65116	
	National	MMC2116	
	NEC	μPD4016	
	OKI	MSM2128	
		MSM5128	**4732,4733**
	RCA	MWS6116A	
	SSS	883C21C16	
		BCM21C16	
		SCM21C16	
		SCM6116	
	TI	TMS4016	
	ThomsonCSF	ET2128	
	Toshiba	**TC5516A**	**4263**
		TMM2015A	
		TMM2016	
		TMM2016A	**4263**
	Samsung	KM6816	
	UMC	UM2128	
	Universal	US574HC133	
MCM2016H	AMD	AM9128	
		AM9218	
	Cypress	CY7C128	
	Fujitsu	MB8128	
		MB8416	
	Harris	HM6116	
		HM6516	
	IDT	IDT6116	
	Intel	2128	
	MicroPwr	MP6116	
	Mitsubishi	M58275	
		M5M116	
		M5M5116	
		M5M5117	
		M5M5118	
		MS8725	
	Motorola	MCM2016	
		MCM2128	
		MCM6116	**4119**
		MCM61L16	**4119**
		MCM65116	
	National	MMC2116	
	NEC	μPD4016	
	OKI	MSM2128	
		MSM5128	**4732,4733**
MCM2016H	RCA	MWS6116A	
	SSS	883C21C16	
		BCM21C16	
		SCM21C16	
		SCM6116	
	TI	TMS4016	
	ThomsonCSF	ET2128	
	Toshiba	**TC5516A**	**4263**
		TMM2015A	
		TMM2016	
		TMM2016A	**4263**
	Samsung	KM6816	
	UMC	UM2128	
	Universal	US574HC133	
MCM2018	Toshiba	TMM2018	
		TMM2019	
MCM2128	AMD	AM9128	
		AM9218	
	Cypress	CY7C128	
	Fujitsu	MB8128	
		MB8416	
	Harris	HM6116	
		HM6516	
	IDT	IDT6116	
	Intel	2128	
	MicroPwr	MP6116	
	Mitsubishi	M58275	
		M5M116	
		M5M5116	
		M5M5117	
		M5M5118	
		MS8725	
	Motorola	MCM2016	
		MCM2016H	
		MCM6116	**4119**
		MCM61L16	**4119**
		MCM65116	
	National	MMC2116	
	NEC	μPD4016	
	OKI	MSM2128	
		MSM5128	**4732,4733**
	RCA	MWS6116A	
	SSS	883C21C16	
		BCM21C16	
		SCM21C16	
		SCM6116	
	TI	TMS4016	
	ThomsonCSF	ET2128	
	Toshiba	**TC5516A**	**4263**
		TMM2015A	
		TMM2016	
		TMM2016A	**4263**
	Samsung	KM6816	
	UMC	UM2128	
	Universal	US574HC133	
MCM2167H	AMD	AM2167	
	Cypress	CY7C167	
	Fujitsu	MB8167A	
		MB81C67	
	Harris	HM65262	
	Hitachi	HM6167	
		HM6167H	
		HM6267	
	Inmos	IMS1400	
		IMS1403	**4042**
	IDT	IDT6167	
	Intel	51C67	
	Mitsubishi	M5M2167	
	NEC	UPD2167	
MCM21L14	AMD	AM9114	
	Fairchild	F2114	
	Hitachi	HM472114	
	Intel	2114	
		2114A	
	Mitsubishi	M5L2114	
	Motorola	M5L2114	
		MCM2114	
	National	NMC2114A	
	OKI	MSM2114	
	SSS	SCM2114A	
		SCM21C14	
	Synertek	SY2114	
	Toshiba	TMM2114A	
		TMM314A	
	UMC	UM2114	
◆MCM2532	Hitachi	HN462532	
	National	MM2532	
		NMC2532	
		TDA2530	
		TDA2532	
	Plessey	TDA2530	
◆MCM2532	Siemens	TDA2530	
	SiliconG	SG2532	
◆MCM2716	Hitachi	HN462716	
	National	MM2716	
	OKI	MSM2716	
	SGS	M2716	
	ThomsonCSF	ET2716	
MCM27S19	AMD	AM27LS19	
		AM27S19	
	Fujitsu	MB7112	
	MMI	5331-1	
		53S081	**4101**
		6331-1	
		63S081	**4101,4102**
	National	DM74S288	
		DM8578	
	Signetics	**N82S123**	**4166**
		S82S123	
	TI	**TBP18S030**	**729**
MCM27S25	AMD	AM21L49	
		AM27S25	
	Cypress	CY7C225	
	Fujitsu	MB7226	
	MMI	**53RA481**	**4101**
		63RA481	**4101**
	National	DM87SR25	
		DM87SR474	
MCM27S35	AMD	AM27S35	
		AM27S37	
	Cypress	CY7C235	
	Fujitsu	MB7232	
	MMI	53RA881	
		63RA881	
		63RS881	**4101,4103**
	National	DM87SR181	
◆MCM2801	GI	ER59256	
	NCR	**NCR52801**	**4128**
MCM2833	**NCR**	**NCR52832**	**4129**
	SEEQ	52B23	
		52B23H	
◆MCM4016	AMD	AM9128	
		AM9218	
	Cypress	CY7C128	
	Fujitsu	MB8128	
		MB8416	
	Harris	HM6116	
		HM6516	
	IDT	IDT6116	
	Intel	2128	
	MicroPwr	MP6116	
	Mitsubishi	M58275	
		M5M116	
		M5M5116	
		M5M5117	
		M5M5118	
		MS8725	
	Motorola	MCM2016	
		MCM2016H	
		MCM2128	
		MCM6116	**4119**
		MCM61L16	**4119**
		MCM65116	
	National	MMC2116	
	NEC	μPD4016	
	OKI	MSM2128	
		MSM5128	**4732,4733**
	RCA	MWS6116A	
	SSS	883C21C16	
		BCM21C16	
		SCM21C16	
		SCM6116	
	TI	TMS4016	
	ThomsonCSF	ET2128	
	Toshiba	**TC5516A**	**4263**
		TMM2015A	
		TMM2016	
		TMM2016A	**4263**
	Samsung	KM6816	
	UMC	UM2128	
	Universal	US574HC133	
MCM4164B	Fairchild	F64K	
	Fujitsu	MB8264A	
		MB8266A	
	Hitachi	HM4864	
	Inmos	IMS2600	
	MicronTech	MT4264	
	Motorola	MCM6665B	
	National	NMC4164	
	NEC	μPD4164	
	OKI	MSM3764	
MCM4164B	ThomsonCSF	ET4164	
	Toshiba	TMM4164	
	Samsung	KM4164	
MCM4517	**Fairchild**	**F100422**	**4014**
	Fujitsu	MB8118	
		MBM100422	
		MBM100422A	
	Hitachi	HM100422	
		HM4816	
	Intel	2118	
	Mostek	MK4516	
	National	DM100422	
		NMC5295	
	NEC	UPB100422	
	Signetics	100422	
		GBX100422	
MCM5101	GouldAMI	S5101	
		S6501	
	Harris	MH6501	
	Hitachi	HM435101	
	Intel	5101	
	Motorola	MCMS1L01	
	National	MM74C920	
	Panasonic	MNS101	
	RCA	**MWS5101**	**1673,1676**
	Sharp	LH5101	
	SSS	SCM5101	
	Synertek	SY2101	
	Toshiba	TC5501	
MCM6116	AMD	AM9128	
		AM9218	
	Cypress	CY7C128	
	Fujitsu	MB8128	
		MB8416	
	Harris	HM6116	
		HM6516	
	IDT	IDT6116	
	Intel	2128	
	MicroPwr	MP6116	
	Mitsubishi	M58275	
		M5M116	
		M5M5116	
		M5M5117	
		M5M5118	
		MS8725	
	Motorola	MCM2016	
		MCM2016H	
		MCM2128	
		MCM61L16	**4119**
		MCM65116	
	National	MMC2116	
	NEC	μPD4016	
	OKI	MSM2128	
		MSM5128	**4732,4733**
	RCA	MWS6116A	
	SSS	883C21C16	
		BCM21C16	
		SCM21C16	
		SCM6116	
	TI	TMS4016	
	ThomsonCSF	ET2128	
	Toshiba	**TC5516A**	**4263**
		TMM2015A	
		TMM2016	
		TMM2016A	**4263**
	Samsung	KM6816	
	UMC	UM2128	
	Universal	US574HC133	
MCM6147	Cypress	CY2147	
		CY7C147	
	Hitachi	HM6147	
	Intel	2141	
		2147	
		2147-3	
	Motorola	MCM61L47	
	National	MM2147	
		NMC2141	
	NEC	MPD2147	
	OKI	MSM5104	
	TI	TMS2147	
	Toshiba	TMM3150	
	UMC	UM2147	
MCM6164	AMD	AM9988	
		AM9988C	
	Cypress	CY7C186	
	Fujitsu	MB8464	
		MB8464A	
	Hitachi	HM6264	
		HM6464	
	IDT	IDT7188	

(Continued)

◆ Discontinued

The manufacturers report their devices can be used as direct replacements.
Performance details often differ, so compare the specifications considering your requirements.

Motorola Semiconductor Products (Cont'd)

Manufacturer Device	Replacement Source	Device	IC Master Page
MCM6164	IDT	IDT7M864	
	Mitsubishi	M5M5165	
	NEC	µPD4364	
		µPD4464	
	OKI	MSM5164	
		MSM5165	
	RCA	CDM6264	
	S-MOS	SRM2064	
		SRM2264	**4177,4178**
	Sharp	LH5164	
	Toshiba	TC5564	
		TC5565	
		TMM2063	
		TMM2064	
	Samsung	KM6264	
MCM6168	AMD	AM2168	
		AM99C68	
	Cypress	CY7C168	
	Fujitsu	MB8168	
	Hitachi	HM6168	
	Inmos	IMS1420	
		IMS1421	
		IMS1423	
	IDT	IDT6168	
	Mitsubishi	M5M2168	
	TI	TMS2168	
MCM6169	Cypress	CY7C168	
		CY7C169	
	Fujitsu	MB81C68A	
	Toshiba	TMM2068	
		TMM2069	
MCM61L16	AMD	AM9128	
		AM9218	
	Cypress	CY7C128	
	Fujitsu	MB8128	
		MB8416	
	Harris	HM6116	
		HM6516	
	IDT	IDT6116	
	Intel	2128	
	MicroPwr	MP6116	
	Mitsubishi	M58275	
		M5M116	
		M5M5116	
		M5M5117	
		M5M5118	
		MS8725	
	Motorola	MCM2016	
		MCM2016H	
		MCM2128	
		MCM6116	**4119**
		MCM65116	
	National	MMC2116	
	NEC	µPD4016	
	OKI	MSM2128	
		MSM5128	**4732,4733**
	RCA	MWS6116A	
	SSS	883C21C16	
		BCM21C16	
		SCM21C16	
		SCM6116	
	TI	TMS4016	
	ThomsonCSF	ET2128	
	Toshiba	**TC5516A**	**4263**
		TMM2015A	
		TMM2016	
		TMM2016A	**4263**
	Samsung	KM6816	
	UMC	UM2128	
	Universal	US574HC133	
MCM61L47	Cypress	CY2147	
		CY7C147	
	Hitachi	HM6147	
	Intel	2141	
		2147	
		2147-3	
	Motorola	MCM6147	
	National	MM2147	
		NMC2141	
	NEC	MPD2147	
	OKI	MSM5104	
	TI	TMS2147	
	Toshiba	TMM3150	
	UMC	UM2147	
MCM6256	AMD	MCM6256	
	AT&T	WCM41256	
	Fujitsu	MB81256	
			(Continued)
MCM6256	Hitachi	HM50256	
		HM50257	
	MicronTech	MT1256	
	Mitsubishi	M5M4256	
		MSM4257	
	Motorola	MCM6257	
	NEC	MPD41257	
		µPD41256	
	OKI	M5M37256	
		MSM37256	
		MSM41256	
	Panasonic	MM41256	
	TI	TMS4257	
	Toshiba	TMM41256	
	Samsung	KM1256	
MCM6257	AMD	MCM6256	
	AT&T	WCM41256	
	Fujitsu	MB81256	
	Hitachi	HM50256	
		HM50257	
	MicronTech	MT1256	
	Mitsubishi	M5M4256	
		MSM4257	
	Motorola	MCM6256	
	NEC	MPD41257	
		µPD41256	
	OKI	M5M37256	
		MSM37256	
		MSM41256	
	Panasonic	MM41256	
	TI	TMS4257	
	Toshiba	TMM41256	
	Samsung	KM1256	
MCM6287	Cypress	CY7C187	
	Fairchild	F1600	
	Hitachi	HM6287	
		HM6787	**4035**
	Inmos	IMS1600	
	IDT	IDT7187	
	NEC	MPD4361	
	RCA	**CD74HC4515**	**1150**
	SGS	M74HC4515	
	Signetics	PC74HC4515	
	Toshiba	TC5561	
		TC5562	
MCM6288	AMD	AM99C164	
	Inmos	IMS1620	
	Lattice	SR64K4	
MCM63128	AMD	AM92128	
	GI	R09128	
		SPR-128	
	GouldAMI	S23128	
		S3630A	
	GTEMicro	G53128	
	Hitachi	HN613128	
		HN613128P	
	Mitsubishi	M5M23128	
	NCR	NCR23128	
	NEC	UPD23128	
		UPD23128A	
		UPD23128E	
		UPD23C128	
		UPD23C128E	
	RCA	**CDM53128**	**1673,1677**
	Rockwell	R23128	
	Signetics	23128	
	SSS	SCM23C128	
	Supertex	CM1310	
	Synertek	SY23128	
	Toshiba	TMM23128	
	UMC	UM23128	
	VTI	23131	
		VT23128	
		VT23129	
		VT23129A	
		VT23130	
		VT23138	
MCM63256	AMD	AM92256	
	Fujitsu	MB83256	
	GI	R09256	
	GouldAMI	S23256	
		S38256	
	GTEMicro	G53256	
	Hitachi	HN613256	
	Mitsubishi	M5M23256	
	Mostek	MK38000	
	Motorola	MCM65256	
	NCR	NCR23256	
		NCR23257	
	NEC	UPD23256	
		UPD23256A	
			(Continued)
MCM63256	NEC	UPD23C256E	
	OKI	**MSM38256**	**4733**
	Panasonic	MN23256	
		MN23257	
	RCA	CDM52356	
		CDM53256	**1673,1678**
	S-MOS	**SMM2326**	**4178**
		SMM6325	**4178**
		SMM6326	**4178**
	Signetics	23256	
		23256A	
	SSS	SCM23C256	
	Supertex	CM2560	
	Toshiba	**TMM23256**	**4263**
	UMC	UM23256	
	VTI	23257	
		VT23256	
		VT23257	
MCM65116	AMD	AM9128	
		AM9218	
	Cypress	CY7C128	
	Fujitsu	MB8128	
		MB8416	
	Harris	HM6116	
		HM6516	
	IDT	IDT6116	
	Intel	2128	
	MicroPwr	MP6116	
	Mitsubishi	M58275	
		M5M116	
		M5M5116	
		M5M5117	
		M5M5118	
		MS8725	
	Motorola	MCM2016	
		MCM2016H	
		MCM2128	
		MCM6116	**4119**
		MCM61L16	**4119**
	National	MMC2116	
	NEC	µPD4016	
	OKI	MSM2128	
		MSM5128	**4732,4733**
	RCA	MWS6116A	
	SSS	883C21C16	
		BCM21C16	
		SCM21C16	
		SCM6116	
	TI	TMS4016	
	ThomsonCSF	ET2128	
	Toshiba	**TC5516A**	**4263**
		TMM2015A	
		TMM2016	
		TMM2016A	**4263**
	Samsung	KM6816	
	UMC	UM2128	
	Universal	US574HC133	
MCM65256	AMD	AM92256	
	Fujitsu	MB83256	
	GI	R09256	
	GouldAMI	S23256	
		S38256	
	GTEMicro	G53256	
	Hitachi	HN613256	
	Mitsubishi	M5M23256	
	Mostek	MK38000	
	Motorola	MCM63256	
	NCR	NCR23256	
		NCR23257	
	NEC	UPD23256	
		UPD23256A	
		UPD23C256E	
	OKI	**MSM38256**	**4733**
	Panasonic	MN23256	
		MN23257	
	RCA	CDM52356	
		CDM53256	**1673,1678**
	S-MOS	**SMM2326**	**4178**
		SMM6325	**4178**
		SMM6326	**4178**
	Signetics	23256	
		23256A	
	SSS	SCM23C256	
	Supertex	CM2560	
	Toshiba	**TMM23256**	**4263**
	UMC	UM23256	
	VTI	23257	
		VT23256	
		VT23257	
MCM6665B	Fairchild	F64K	
	Fujitsu	MB8264A	
		MB8266A	
	Hitachi	HM4864	
	Inmos	IMS2600	
	MicronTech	MT4264	
	Motorola	MCM4164B	
	National	NMC4164	
	NEC	µPD4164	
	OKI	MSM3764	
	ThomsonCSF	ET4164	
	Toshiba	TMM4164	
	Samsung	KM4164	
MCM67256	AMD	AM27256	
	Fujitsu	MBM27256	
		MBM27C256	
	GI	R09256	
	Hitachi	HM4827256	
		HN27256	
		HN27C256	**4037**
	Intel	27256	
		27C256	**4079**
	Mitsubishi	M5L27256	
		MSL27256	
	National	NMC27C256	
	NEC	MPD27256	
		UPD27256	
		UPD27C256	
		UPD27C256A	
	SEEQ	27256	
		27C256	
	SGS	M27256	
	SSS	SCM27C128	
	Toshiba	TC57256	
		TMM27256	
		TMM27C256	
	VTI	**VT27C256**	**4265,4273**
MCM6810	Fairchild	F6810	
	GouldAMI	S6810	
	Hitachi	HD6810	
		HD68A10	
	Motorola	MC6810	
	ThomsonCSF	EF6810	
MCM68364	AMD	9264	
	GI	R03-9364	
	GouldAMI	S68A364	
	Hitachi	HN48364	
	Intech	IM7364	
	MicroPwr	MP2364C	
	Mitsubishi	M58334	
	Mostek	MK36000	
	Motorola	**MCM68365**	**4120**
		MCM68366	**4120**
	National	MM52164	
	NEC	UPD2364	
	Rockwell	R2364A	
	SGS	M2362	
		M36000	
	Signetics	2664	
		26S64	
	SSS	SCM23C64	
	SMC	ROM36000	
	Synertek	SY2364/A	
	TI	TMS4764	
	Toshiba	TMM2366	
MCM68365	AMD	9264	
	GI	R03-9364	
	GouldAMI	S68A364	
	Hitachi	HN48364	
	Intech	IM7364	
	MicroPwr	MP2364C	
	Mitsubishi	M58334	
	Mostek	MK36000	
	Motorola	**MCM68364**	**4120**
		MCM68366	**4120**
	National	MM52164	
	NEC	UPD2364	
	Rockwell	R2364A	
	SGS	M2362	
		M36000	
	Signetics	2664	
		26S64	
	SSS	SCM23C64	
	SMC	ROM36000	
	Synertek	SY2364/A	
	TI	TMS4764	
	Toshiba	TMM2366	
MCM68366	AMD	9264	
	GI	R03-9364	
	GouldAMI	S68A364	
	Hitachi	HN48364	
			(Continued)

◆ Discontinued

Bold face device numbers indicate manufacturers data is provided in the IC Master on the pages noted.

ALTERNATE SOURCE DIRECTORY

Motorola Semiconductor Products (Cont'd)

Manufacturer Device	Replacement Source	Device	IC Master Page
MCM68366	Intech	IM7364	
	MicroPwr	MP2364C	
	Mitsubishi	M58334	
	Mostek	MK36000	
	Motorola	**MCM68364**	**4120**
		MCM68365	**4120**
	National	MM52164	
	NEC	UPD2364	
	Rockwell	R2364A	
	SGS	M2362	
		M36000	
	Signetics	2664	
		26S64	
	SSS	SCM23C64	
	SMC	ROM36000	
	Synertek	SY2364/A	
	TI	TMS4764	
	Toshiba	TMM2366	
MCM68369	AMD	AM9265	
	Fairchild	F3568	
		F3569	
		F3570	
	GI	R03-9365	
		R09864	
	GouldAMI	S2364	
		S6364	
	GTEMicro	G5364	
	Hitachi	HN61364	
	Intel	2364A	
	Mitsubishi	M5M2364	
		M5M2365	
		M5M23C64	
	Mostek	MK37000	
	Motorola	MCM68370	
	National	MM52264	
		NM52264	
	OKI	**MSM3864**	**4733**
	Panasonic	MN2364	
		MN4864	
	RCA	**CDM5365**	**1673,1677**
	Rockwell	R2364B	
	SSS	SCM23C65	
	Supertex	23SC64	
		23SC64/A	
		CM6400	
	Synertek	SY2365/A	
	TI	TMS2364	
		TMS4764	
	Toshiba	TMM2365	
	UMC	UM2366	
	VTI	VT2365	
MCM68370	AMD	AM9265	
	Fairchild	F3568	
		F3569	
		F3570	
	GI	R03-9365	
		R09864	
	GouldAMI	S2364	
		S6364	
	GTEMicro	G5364	
	Hitachi	HN61364	
	Intel	2364A	
	Mitsubishi	M5M2364	
		M5M2365	
		M5M23C64	
	Mostek	MK37000	
	Motorola	MCM68369	
	National	MM52264	
		NM52264	
	OKI	**MSM3864**	**4733**
	Panasonic	MN2364	
		MN4864	
	RCA	**CDM5365**	**1673,1677**
	Rockwell	R2364B	
	SSS	SCM23C65	
	Supertex	23SC64	
		23SC64/A	
		CM6400	
	Synertek	SY2365/A	
	TI	TMS2364	
		TMS4764	
	Toshiba	TMM2365	
	UMC	UM2366	
	VTI	VT2365	
MCM68A10	Hitachi	HM468A10	
MCM68A332	AMD	AM9232	
	CSG	MPS2332	
		(Continued)	
MCM68A332	Fairchild	F3532	
	GI	R03-9332	
	GouldAMI	S2333	
		S68A332	
	GTEMicro	G2332	
	Hitachi	HN46332	
	Intech	IM7332	
	Intel	2332	
	Mitsubishi	M58333	
	National	NM52132	
	NCR	NCR2332	
	NEC	UPD2332A	
	Panasonic	MN2332	
	RCA	**CDM5333**	**1673,1677**
	Rockwell	R2332	
	SGS	M2332	
	Sharp	LH2332	
	Siemens	SA88332	
		SAB8332	
	Signetics	2332	
		2632A	
	SiliconG	SG3532	
	SSS	SCM23C32	
	SMC	ROM4732	
	Supertex	23SC32	
		CM3200	
	Synertek	SY2332	
	TI	TM2332	
		TMS2332	
		TMS4732	
	Toshiba	TMM2332	
		TMM333P	
	VTI	VT2332	
MCM68B10	Fairchild	F68B10	
MCM76	AMD	AM27S191	
		AM27S291	
	Fairchild	932511	
	Fujitsu	MB7138H	
	Harris	HM76161	
	MMI	63S181	
	National	DM878291	
	NEC	μPB429	
	Raytheon	**29683A**	**4134**
MCM76101	AMD	27S191	
		AM27S191	
	Fairchild	932511	
	Fujitsu	MB7138	
	Harris	76161	
		HM76161	
	Hitachi	HN25169	
	MMI	**63S1681**	**4101,4103**
	National	77S191	
		87S191	
		DM87S191	
	Raytheon	**29681**	**4134**
	Signetics	82S191	
		N82S191	**4167**
	TI	28S166	
		TBP28S166	
MCM76161	EXEL	XL46C16	
	Fairchild	932511M	
	Fujitsu	MB7138E	
	Harris	HM6616	
		HM76161	
	Hitachi	HN25169S	
	MMI	**53S1681**	**4101**
	National	DM77S191	
		DM77S191A	
		DM77S291	
		DM77S291A	
	Raytheon	**29681**	**4134**
		29681A	**4134**
		29683	**4134**
		29683A	**4134**
	ThomsonCSF	SFC71191A	
MCM76165	Fairchild	93513	
MCM7621	AMD	AM27S13	
	Fujitsu	MB7116	
	Harris	HM7621	
	MMI	6306-1	
		63S241	**4101,4102**
	National	DM74S571	
	Signetics	**N82S131**	**4166**
MCM7641	AMD	AM27S31	
	MMI	6341-1	
	National	DM74S474	
	Signetics	N82S141	
	TI	TBP28S46	
MCM7643	AMD	AM27S33	
	Fairchild	93453	
		(Continued)	
MCM7643	Fujitsu	MB7122	
	Hitachi	HN25045	
	MMI	5353-1	
		535441	
		6353-1	
		63S441	**4101,4102**
		G35441	
	National	DM74S573	
	NEC	UPB426	
	Signetics	N72HS137	
		N825137	
		N82S137	**4166**
		S82S195	
	TI	TBP24S41	
MCM7643M	AMD	AM27S33M	
	MMI	**53S441**	**4101**
	National	DM54S573	
		DM54S573A	
	Signetics	S82HS137	
		S82S137	
		S82S195	
	TI	TBP24S41M	
◆MCM7680	AMD	AM27S180	
	Fujitsu	MB7131	
	MMI	6380-1	
	National	DM87S180	
		DM87S229	
	Signetics	N82S180	
	TI	TBP28SA86A	
MCM7681	AMD	AM27S181M	
	Cypress	CY7C282M	
	Fairchild	932451	
		93451	
	Fujitsu	MB7132	
	Harris	7681	
	Hitachi	HN25089	
	MMI	5381-1	
		6381	**4102**
		6381-1	
	National	DM77S181	
		DM77S281	
		DM87S281	
	Raytheon	29631AM	
		29632	
	Signetics	82S181	
		NS82HS195	
		S82HS181	
		S82S181	
	TI	28S86	
		TBP28S86AM	
◆MCM7684	AMD	AM27S184	
	Fujitsu	MB7127	
	Hitachi	HM25045	
	MMI	6388	
		6388-1	
	National	DM87S184	
	Signetics	N82S184	
	TI	TBP24SA81	
MCM7685	AMD	27S185	
		AM27S185	
	Fujitsu	MB7128	
	Hitachi	HN25085	
	MMI	5389	
		6389	**4102**
		6389-1	
		63S841	**4101,4102**
	National	77S185	
		87S185	
		DM87S185	
	Raytheon	29651	
		29651A	**4134**
	Signetics	82S185	
		N82HS185	
		N82S185	**4166**
	TI	24S81	
		TBP24S81	
◆MCM7686	National	DM87S186	
◆MCM7687	National	DM87S187	
◆MCM82707	Signetics	N82S707	
◆MCM82708	Signetics	N82S708	
◆MCM93412	AMD	AM93412	
MCM93422	AMD	AM93422	
	Cypress	CY7C122	
	Fairchild	93422	
MCMS1L01	GouldAMI	S5101	
		S6501	
	Harris	MH6501	
	Hitachi	HM435101	
	Intel	5101	
	Motorola	MCM5101	
	National	MM74C920	
	Panasonic	MNS101	
		(Continued)	
MCMS1L01	**RCA**	**MWS5101**	**1673,1676**
	Sharp	LH5101	
	SSS	SCM5101	
	Synertek	SY2101	
	Toshiba	TC5501	
MFQD2404	TI	TIED461	
MFQD2405	TI	TIED463	
◆MLM139	Fairchild	μA139	
	Motorola	**LM139**	**3631**
	National	LM139	
	PMI	CMP-04	
		PM139	
	Raytheon	LM139	
	RCA	**CA139**	**3672,3677**
	Signetics	LM139	
	TI	**LM139**	**719**
MQ3724	Fairchild	FQ3724	
	Raytheon	SP3724	
MQ3725	Fairchild	FQ3725	
	National	DH3725	
	Raytheon	SP3725	
NE592	Fairchild	μA733	
	Hitachi	HA17733	
	Intersil	μA733	
	Motorola	**MC1733**	**3616**
	National	LM733	
	Signetics	**μA733**	**3721,3729**
	TI	μA733	
SE592	**Intersil**	**SE592**	**3602**
	Signetics	**SE592**	**3722,3729**
SG1525A	Cherry	CS1525A	
	Exar	**XR1525A**	**3559**
	IPS	**IP1525A**	**3599**
	LinearTech	LT1525A	
	SGS	SG1524A	
	SiliconG	SG1525A	
	Siliconix	PWM125	
	Sprague	ULS-8125	
	TI	SG1525A	
	Unitrode	**UC1525A**	**3739**
SG1526	**IPS**	**IP1526**	**3599**
	Motorola	**SG3526**	**3626**
	SiliconG	SG1526	
	Sprague	ULN8126	
		ULQ8126	
		ULS8126	
	Unitrode	UC1526	
SG1527A	Cherry	CS1527A	
	IPS	IP1527A	
	LinearTech	LT1527A	
	SGS	SG1527A	
	SiliconG	SG1527A	
	Siliconix	PWM27	
	Sprague	ULS-8125	
	TI	SG1527A	
	Unitrode	**UC1527A**	**3739**
SG2525A	Cherry	CS2525A	
	Exar	XR2525A	
	IPS	**IP2525A**	**3599**
	LinearTech	LT2525A	
	SiliconG	SG2525A	
	Siliconix	PWM25B	
	Sprague	ULQ-8125	
	TI	SG2525A	
	Unitrode	**UC2525A**	**3739**
SG2526	**IPS**	**IP2526**	**3599**
	SiliconG	SG2526	
	Sprague	ULQ-8126	
	Unitrode	UC2526	
SG2527A	Cherry	CS2527A	
	Exar	XR2527A	
	IPS	IP2527A	
	LinearTech	LT2527A	
	SiliconG	SG2527A	
	TI	SG2527A	
	Unitrode	**UC2527A**	**3739**
SG3525A	Exar	XR3525A	
	IPS	**IP3525A**	**3599**
	LinearTech	LT3525A	
	SGS	SG3525A	
	SiliconG	SG3525A	
	Siliconix	PWM25	
	TI	SG3525A	
	Unitrode	**UC3525A**	**3739**
SG3526	**IPS**	**IP1526**	**3599**
	Motorola	**SG1526**	**3626**
	SiliconG	SG1526	
	Sprague	ULN8126	
		ULQ8126	
		ULS8126	
	Unitrode	UC1526	

◆ Discontinued

The manufacturers report their devices can be used as direct replacements.
Performance details often differ, so compare the specifications considering your requirements.

Motorola Semiconductor Products (Cont'd)

Manufacturer Device	Replacement Source	Device	IC Master Page
SG3527A	Cherry	CS3527	
		CS3527A	
	Exar	**XR3527A**	3559
	IPS	**IP3527**	3599
	LinearTech	LT3527A	
	SGS	SG3527A	
	SiliconG	SG3527A	
	TI	SG3527A	
SN54ALS00	National	DM54ALS00	
	TI	SN54ALS00A	
SN54ALS02	National	DM54ALS02	
	TI	**SN54ALS02**	712
SN54ALS04	National	DM54ALS04	
	TI	**SN54ALS04A**	712
SN54ALS08	National	DM54ALS08	
	TI	**SN54ALS08**	712
SN54ALS09	National	DM54ALS09	
	TI	**SN54ALS09**	712
SN54ALS160	National	DM54ALS160	
SN54ALS161	National	DM54ALS161	
	TI	SN54ALS161B	
SN54ALS162	National	DM54ALS162	
	TI	**SN54ALS162A**	713
SN54ALS163	National	DM54ALS163	
	TI	**SN54ALS163A**	713
SN54ALS240	National	DM54ALS240	
	TI	SN54ALS240A	
SN54ALS241	National	DM54ALS241	
	TI	SNALS241A	
SN54ALS242	National	DM54ALS242	
	TI	SN54ALS242A	
SN54ALS243	National	DM54ALS243	
	TI	SN54ALS243A	
SN54ALS244	National	DM54ALS244	
	TI	SN54ALS244A	
SN54ALS245	National	DM54ALS245	
	TI	SN54ALS245A	
SN54ALS273	National	DM54ALS273	
	TI	**SN54ALS273**	713
SN54ALS32	National	DM54ALS32	
	TI	**SN54ALS32**	713
SN54ALS373	National	DM54ALS373	
	TI	SN54ALS373	
SN54ALS374	National	DM54ALS374	
	TI	**SN54ALS374**	713
SN54ALS377	National	DM54ALS377	
SN54ALS573	National	DM54ALS573	
	TI	**SN54ALS573**	713
SN54ALS574	National	DM54ALS574	
	TI	**SN54ALS574**	713
SN54ALS576	National	DM54ALS576	
	TI	**SN54ALS576**	713
SN54ALS580	National	DM54ALS580	
	TI	**SN54ALS580**	713
SN54ALS620	National	DM54ALS620	
	TI	**SN54ALS620A**	713
SN54ALS621	National	DM54ALS621	
SN54ALS622	National	DM54ALS622	
SN54ALS623	National	DM54ALS623	
	TI	**SN54ALS623A**	713
SN54ALS640	National	DM54ALS640	
	TI	**SN54ALS640A**	713
SN54ALS641	National	DM54ALS641	
SN54ALS642	National	DM54ALS642	
SN54ALS643	National	DM54ALS643	
SN54ALS644	National	DM54ALS644	
SN54ALS646	National	DM54ALS646	
SN54ALS647	National	DM54ALS647	
SN54ALS648	National	DM54ALS648	
SN54ALS649	National	DM54ALS649	
SN54ALS690	National	DM54ALS690	
SN54ALS691	National	DM54ALS691	
SN54ALS692	National	DM54ALS692	
SN54ALS693	National	DM54ALS693	
SN54ALS696	National	DM54ALS696	
SN54ALS697	National	DM54ALS697	
SN54ALS698	National	DM54ALS698	
SN54ALS699	National	DM54ALS699	
SN54ALS74	National	DM54ALS74	
	TI	**SN54ALS74A**	713
SN54ALS873	National	DM54ALS873	
	TI	**SN54ALS873**	713
SN54ALS874	National	DM54ALS874	
	TI	**SN54ALS874**	713
SN54ALS876	National	DM54ALS876	
	TI	**SN54ALS876**	713
SN54ALS880	National	DM54ALS880	
◆SN54H54	**Motorola**	**MC10170**	1132
	Signetics	10170	
SN54LS00	**Fairchild**	**54LS00**	607,612,621,623
	National	DM54LS00	
	SGS	T54LS00	
	Signetics	54LS00	
	TI	**SN54LS00**	715
SN54LS01	National	DM54LS01	
	TI	**SN54LS01**	715
SN54LS02	**Fairchild**	**54LS02**	607,612,621,623
	National	DM54LS02	
	SGS	T54LS02	
	Signetics	54LS02	
	TI	**SN54LS02**	715
SN54LS03	**Fairchild**	**54LS03**	607,612,621,623
	National	DM54LS03	
	SGS	T54LS03	
	TI	**SN54LS03**	715
SN54LS04	**Fairchild**	**54LS04**	607,612,621,623
	National	DM54LS04	
	SGS	T54LS04	
	Signetics	54LS04	
	TI	**SN54LS04**	715
SN54LS05	**Fairchild**	**54LS05**	607,612,621,623
	National	DM54LS05	
	SGS	T54LS05	
	TI	**SN54LS05**	715
SN54LS08	**Fairchild**	**54LS08**	607,612,621,623
	National	DM54LS08	
	SGS	T54LS08	
	Signetics	54LS08	
	TI	**SN54LS08**	715
SN54LS09	**Fairchild**	**54LS09**	612
	National	DM54LS09	
	SGS	T54LS09	
	TI	**SN54LS09**	715
SN54LS10	**Fairchild**	**54LS10**	607,612,621,623
	National	DM54LS10	
	SGS	T54LS10	
	Signetics	54LS10	
	TI	**SN54LS10**	715
SN54LS11	**Fairchild**	**54LS11**	607,612,621,623
	National	DM54LS11	
	SGS	T54LS11	
	TI	**SN54LS11**	715
SN54LS12	National	DM54LS12	
	TI	**SN54LS12**	715
SN54LS122	National	DM54LS122	
	TI	**SN54LS122**	715
SN54LS123	National	DM54LS123	
	TI	**SN54LS123**	715
SN54LS125	**Fairchild**	**54LS125A**	612
	Motorola	**SN54LS125A**	1124
	National	DM54LS125	
	SGS	T54LS125	
	Signetics	54LS125A	
	TI	**SN54LS125A**	715
SN54LS125A	**Fairchild**	**54LS125A**	612
	Motorola	SN54LS125	
	National	DM54LS125	
	SGS	T54LS125	
	Signetics	54LS125A	
	TI	**SN54LS125A**	715
SN54LS13	**Fairchild**	**54LS13**	612
	National	DM54LS13	
	SGS	T54LS13	
	TI	**SN54LS13**	715
SN54LS132	National	DM54LS132	
	SGS	T54LS132	
	Signetics	54LS132	
	TI	**SN54LS132**	715
SN54LS133	**Fairchild**	**54LS133**	612
	SGS	T54LS133	
SN54LS136	**Fairchild**	**54LS136**	612
	National	DM54LS136	
	SGS	T54LS136	
	Signetics	54LS136	
	TI	**SN54LS136**	715
SN54LS137	**TI**	**SN54LS137**	715
SN54LS138	**Fairchild**	**54LS138**	608,612,621,623
	National	DM54LS138	
	SGS	T54LS138	
	Signetics	54LS138	
	TI	**SN54LS138**	715
SN54LS139	**Fairchild**	**54LS139**	608,613,621,623
	National	DM54LS139	
	SGS	T54LS139	
	Signetics	54LS139	
	TI	**SN54LS139A**	715
SN54LS14	**Fairchild**	**54LS14**	612
	National	DM54LS14	
	SGS	T54LS14	
	Signetics	54LS14	
	TI	**SN54LS14**	715
SN54LS145	**TI**	**SN54LS145**	715
SN54LS147	**TI**	**SN54LS147**	715
SN54LS148	**TI**	**SN54LS148**	715
SN54LS15	**Fairchild**	**54LS15**	612
	National	DM54LS15	
	SGS	T54LS15	
	TI	**SN54LS15**	715
SN54LS151	**Fairchild**	**54LS151**	608,613,621,623
	National	DM54LS151	
	SGS	T54LS151	
	Signetics	54LS151	
	TI	**SN54LS151**	715
◆SN54LS152	Cypress	CY7C166	
	Fairchild	**54LS152**	613
	NEC	MPD4363	
	SGS	T54LS152	
SN54LS153	**Fairchild**	**54LS153**	608,613,621,623
	National	DM54LS153	
	SGS	T54LS153	
	Signetics	54LS153	
	TI	**SN54LS153**	715
SN54LS155	**Fairchild**	**54LS155**	613
	National	DM54LS155	
	SGS	T54LS155	
	TI	**SN54LS155A**	715
SN54LS156	**Fairchild**	**54LS156**	613
	National	DM54LS156	
	SGS	T54LS156	
	TI	**SN54LS156**	715
SN54LS157	**Fairchild**	**54LS157**	608,613,621,623
	National	DM54LS157	
	SGS	T54LS157	
	Signetics	54LS157	
	TI	**SN54LS157**	715
SN54LS158	**Fairchild**	**54LS158**	608,613,621,623
	National	DM54LS158	
	SGS	T54LS158	
	Signetics	54LS158	
	TI	**SN54LS158**	715
SN54LS160A	**Fairchild**	**54LS160A**	613
	SGS	T54LS160	
	Signetics	54LS160A	
	TI	**SN54LS160A**	715
SN54LS161A	Fairchild	54LS161A	
	National	DM54LS161A	
	SGS	T54LS161	
	Signetics	54LS161A	
	TI	**SN54LS161A**	715
SN54LS162A	**Fairchild**	**54LS162A**	613
	National	DM54LS162A	
	SGS	T54LS162	
	Signetics	54LS162A	
	TI	**SN54LS162A**	715
SN54LS163A	**Fairchild**	**54LS163A**	613
	National	DM54LS163	
		DM54LS163A	
	SGS	T54LS163	
	Signetics	54LS163A	
	TI	**SN54LS163A**	715
SN54LS164	**Fairchild**	**54LS164**	613
	National	DM54LS164	
	SGS	T54LS164	
	Signetics	54LS164	
	TI	**SN54LS164**	715
SN54LS165	**Fairchild**	**54LS165**	613
	TI	SN54LS165A	
SN54LS166	TI	SN54LS166A	
SN54LS168	**Fairchild**	**54LS168**	613
	National	DM54LS168	
	SGS	T54LS168	
SN54LS169	**Fairchild**	**54LS169**	613
	National	DM54LS169	
	SGS	T54LS169	
	TI	SN54LS169B	
◆SN54LS170	**Fairchild**	**54LS170**	613
	National	DM54LS170	
			(Continued)
◆SN54LS170	SGS	T54LS170	
	TI	SN54LS170	
◆SN54LS173	Fairchild	54LS173	
	Motorola	**SN54LS173A**	1126
	National	DM54LS173	
	Signetics	54LS173	
	TI	SN54LS173A	
SN54LS173A	Fairchild	54LS173	
	National	DM54LS173	
	Signetics	54LS173	
	TI	SN54LS173A	
SN54LS174	**Fairchild**	**54LS174**	608,613,621,623
	National	DM54LS174	
	SGS	T54LS174	
	Signetics	54LS174	
	TI	SN54LS174	
SN54LS175	**Fairchild**	**54LS175**	608,613,621,623
	National	DM54LS175	
	SGS	T54LS175	
	Signetics	54LS175	
	TI	SN54LS175	
SN54LS181	**Fairchild**	**54LS181**	613
	SGS	T54LS181	
	Signetics	54LS181	
	TI	SN54LS181	
SN54LS190	National	DM54LS190	
	SGS	T54LS190	
	Signetics	54LS190	
	TI	SN54LS190	
SN54LS191	National	DM54LS191	
	SGS	T54LS191	
	Signetics	54LS191	
	TI	SN54LS191	
SN54LS192	**Fairchild**	**54LS192**	613
	National	DM54LS192	
	Raytheon	54LS192	
	SGS	T54LS192	
	Signetics	54LS192	
	TI	SN54LS192	
SN54LS193	**Fairchild**	**54LS193**	608,613,621,623
	National	DM54LS193	
	SGS	T54LS193	
	Signetics	54LS193	
	TI	SN54LS193	
◆SN54LS194	**Fairchild**	**54LS194A**	608,613,621,623
	Motorola	**SN54LS194A**	1128
	SGS	T54LS194	
	TI	SN54LS194A	
SN54LS194A	**Fairchild**	**54LS194A**	608,613,621,623
	SGS	T54LS194	
	TI	SN54LS194A	
◆SN54LS195	**Fairchild**	**54LS195A**	613
	Motorola	**SN54LS195A**	1128
	SGS	T54LS195	
	Signetics	54LS195A	
	TI	SN54LS195A	
SN54LS195A	**Fairchild**	**54LS195A**	613
	SGS	T54LS195	
	Signetics	54LS195A	
	TI	SN54LS195A	
SN54LS196	National	DM54LS196	
	SGS	T54LS196	
	TI	SN54LS196	
SN54LS197	National	DM54LS197	
	SGS	T54LS197	
	Signetics	54LS197	
	TI	SN54LS197	
SN54LS20	**Fairchild**	**54LS20**	608,612,621,623
	National	DM54LS20	
	SGS	T54LS20	
	Signetics	54LS20	
	TI	**SN54LS20**	715
SN54LS21	**Fairchild**	**54LS21**	608,612,621,623
	National	DM54LS21	
	SGS	T54LS21	
	TI	**SN54LS21**	715
SN54LS22	**Fairchild**	**54LS22**	608,612,621,623
	National	DM54LS22	
	SGS	T54LS22	
	TI	**SN54LS22**	715
SN54LS221	National	DM54LS221	
	Signetics	54LS221	
	TI	SN54LS221	

◆ Discontinued

Bold face device numbers indicate manufacturers data is provided in the IC Master on the pages noted.

Motorola Semiconductor Products (Cont'd)

Manufacturer Device	Replacement Source	Device	IC Master Page
SN54LS240	**Fairchild**	**54LS240**	608,613,621,623
	MMI	SN54LS240	
	SGS	T54LS240	
	TI	SN54LS240	
SN54LS241	**Fairchild**	**54LS241**	613
	MMI	SN54LS241	
	SGS	T54LS241	
	TI	SN54LS241	
SN54LS242	TI	SN54LS242	
SN54LS243	TI	SN54LS243	
SN54LS244	**Fairchild**	**54LS244**	613
	MMI	SN54LS244	
	SGS	T54LS244	
	TI	SN54LS244	
SN54LS245	**Fairchild**	**54LS245**	613
	MMI	SN54LS245	
	National	DM54LS245	
	Signetics	54LS245	
	TI	SN54LS245	
SN54LS247	**Fairchild**	**54LS247**	613
	National	DM54LS247	
	TI	SN54LS247	
SN54LS248	**Fairchild**	**54LS248**	613
	National	DM54LS248	
	Signetics	54LS248	
	TI	SN54LS248	
SN54LS249	**Fairchild**	**54LS249**	613
	National	DM54LS249	
	TI	SN54LS249	
SN54LS251	**Fairchild**	**54LS251**	613
	SGS	T54LS251	
	Signetics	54LS251	
	TI	SN54LS251	
SN54LS253	**Fairchild**	**54LS253**	608,613,621,623
	National	DM54LS253	
		DM7214	
	SGS	T54LS253	
	Signetics	54LS253	
	TI	SN54LS253	
SN54LS256	**Fairchild**	**54LS256**	613
	SGS	T54LS256	
SN54LS257A	TI	SN54LS257B	
SN54LS258A	**Fairchild**	**54LS258A**	608,614,622,623
	TI	SN54LS258B	
SN54LS259	**Fairchild**	**54LS259**	614
	SGS	T54LS259	
	TI	SN54LS259B	
SN54LS26	**Fairchild**	**54LS26**	612
	National	DM54LS26	
	SGS	T54LS26	
	TI	**SN54LS26**	715
◆SN54LS260	**Fairchild**	**54LS260**	614
	Motorola	SN54LS260A	
	SGS	T54LS260	
	Signetics	54LS260A	
SN54LS260A	**Fairchild**	**54LS260**	614
	SGS	T54LS260	
	Signetics	54LS260A	
SN54LS266	**Fairchild**	**54LS266**	608,614,622,623
	National	DM54LS266	
	SGS	T54LS266	
	Signetics	54LS266	
	TI	**SN54LS266**	715
SN54LS27	**Fairchild**	**54LS27**	608,612,621,623
	National	DM54LS27	
	SGS	T54LS27	
	TI	**SN54LS27**	715
SN54LS273	**Fairchild**	**54LS273**	614
	MMI	SN54LS273	
	SGS	T54LS273	
	Signetics	54LS273	
	TI	**SN54LS273**	715
SN54LS279	**Fairchild**	**54LS279**	608,614,622,623
	National	DM54LS279	
	SGS	T54LS279	
	Signetics	54LS279	
	TI	SN54LS279	
SN54LS28	**Fairchild**	**54LS28**	612
	SGS	T54LS28	
	Signetics	54LS194A	
		54LS28	
	TI	**SN54LS28**	715
SN54LS280	SGS	T54LS280	
	TI	**SN54LS280**	715
SN54LS283	**Fairchild**	**54LS283**	608,614,622,623
	National	DM54LS283	
	SGS	T54LS283	
	Signetics	54LS283	
	TI	**SN54LS283**	715
SN54LS290	National	DM54LS290	
	SGS	T54LS290	
	Signetics	54LS290	
	TI	**SN54LS290**	715
SN54LS293	National	DM54LS293	
	SGS	T54LS293	
	Signetics	54LS293	
	TI	**SN54LS293**	715
◆SN54LS295	**Fairchild**	**54LS295A**	614
	Motorola	**SN54LS295A**	1129
	SGS	T54LS295	
	TI	SN54LS295B	
SN54LS295A	**Fairchild**	**54LS295A**	614
	SGS	T54LS295	
	TI	SN54LS295B	
SN54LS30	**Fairchild**	**54LS30**	608,612,621,623
	National	DM54LS30	
	SGS	T54LS30	
	Signetics	54LS30	
	TI	**SN54LS30**	715
SN54LS32	**Fairchild**	**54LS32**	608,612,621,623
	National	DM54LS32	
	SGS	T54LS32	
	Signetics	54LS32	
	TI	**SN54LS32**	715
SN54LS33	**Fairchild**	**54LS33**	612
	SGS	T54LS33	
	TI	**SN54LS33**	715
SN54LS352	**Fairchild**	**54LS352**	614
	National	DM54LS352	
	SGS	T54LS352	
	TI	**SN54LS352**	715
SN54LS353	**Fairchild**	**54LS353**	614
	National	DM54LS353	
	SGS	T54LS353	
		T54LS354	
	TI	**SN54LS353**	715
SN54LS365A	Fairchild	54LS365A	
	SGS	T54LS365	
	Signetics	54LS365	
		54LS365A	
	TI	SN54LS365A	
◆SN54LS366	Fairchild	54LS366A	
	Motorola	SN54LS366A	
	National	DM54LS366	
	SGS	T54LS366	
	Signetics	54LS366A	
	TI	SN54LS366A	
SN54LS366A	Fairchild	54LS366A	
	National	DM54LS366	
	SGS	T54LS366	
	Signetics	54LS366A	
	TI	SN54LS366A	
SN54LS367A	Fairchild	54LS367A	
	National	DM54LS367	
	SGS	T54LS367	
	Signetics	54LS367	
		54LS367A	
	TI	SN54LS367A	
SN54LS368A	Fairchild	54LS368A	
	National	DM54LS368	
	SGS	T54LS368	
	Signetics	54LS368	
		54LS368A	
	TI	SN54LS368A	
SN54LS37	**Fairchild**	**54LS37**	612
	National	DM54LS37	
	SGS	T54LS37	
	Signetics	54LS37	
	TI	**SN54LS37**	715
SN54LS373	MMI	SN54LS373	
	SGS	T54LS373	
	Signetics	54LS373	
	TI	**SN54LS373**	715
SN54LS374	**Fairchild**	**54LS374**	614
	MMI	SN54LS374	
	National	DM54LS374	
	SGS	T54LS374	
	TI	**SN54LS374**	715
SN54LS375	**Fairchild**	**54LS375**	614
	Signetics	54LS375	
	TI	**SN54LS375**	715
SN54LS377	**Fairchild**	**54LS377**	614
	MMI	SN54LS377	
	SGS	T54LS377	
	Signetics	54LS377	
	TI	**SN54LS377**	715
SN54LS38	**Fairchild**	**54LS38**	612
	National	DM54LS38	
	SGS	T54LS38	
	TI	**SN54LS38**	715
SN54LS386	National	DM54LS386	
	Raytheon	RM8241	
	Signetics	S82S41	
	TI	SN54LS386	
SN54LS390	SGS	T54LS390	
	TI	**SN54LS390**	716
SN54LS393	SGS	T54LS393	
	TI	**SN54LS393**	716
SN54LS398	**TI**	**SN54LS398**	716
SN54LS40	**Fairchild**	**54LS40**	612
	National	DM54LS40	
	SGS	T54LS40	
	TI	**SN54LS40**	715
SN54LS42	**Fairchild**	**54LS42**	608,612,621,623
	National	DM54LS42	
	SGS	T54LS42	
	Signetics	54LS42	
	TI	**SN54LS42**	715
SN54LS47	**Fairchild**	**54LS47**	612
	National	DM54LS47	
	TI	**SN54LS47**	715
SN54LS48	**Fairchild**	**54LS48**	612
	National	DM54LS48	
	TI	**SN54LS48**	715
SN54LS49	**Fairchild**	**54LS49**	612
	National	DM54LS49	
	TI	**SN54LS49**	715
SN54LS490	**Fairchild**	**54LS490**	614
	SGS	T54LS490	
	TI	**SN54LS490**	716
◆SN54LS503	**Fairchild**	**54LS503**	614
SN54LS51	**Fairchild**	**54LS51**	608,612,621,623
	National	DM54LS51	
	SGS	T54LS51	
	Signetics	54LS51	
	TI	**SN54LS51**	715
SN54LS54	**Fairchild**	**54LS54**	608,612,621,623
	National	DM54LS54	
	SGS	T54LS54	
	TI	**SN54LS54**	715
SN54LS540	**TI**	**SN54LS540**	716
SN54LS55	**Fairchild**	**54LS55**	612
	National	DM54LS55	
	SGS	T54LS55	
SN54LS568	AMD	SN54LS568	
SN54LS623	**TI**	**SN54LS623**	716
SN54LS640	**TI**	**SN54LS640**	716
SN54LS641	**TI**	**SN54LS641**	716
SN54LS642	**TI**	**SN54LS642**	716
SN54LS644	**TI**	**SN54LS644**	716
SN54LS645	MMI	SN54LS645	
	TI	**SN54LS645**	716
SN54LS668	**TI**	**SN54LS668**	716
SN54LS669	**TI**	**SN54LS669**	716
SN54LS670	**Fairchild**	**54LS670**	614
	National	DM54LS670	
	SGS	T54LS670	
	Signetics	54LS670	
	TI	**SN54LS670**	716
SN54LS673	**TI**	**SN54LS673**	716
SN54LS674	**TI**	**SN54LS674**	716
◆SN54LS73	**Motorola**	**SN54LS73A**	1126
	National	DM54LS73	
		DM54LS73A	
	Signetics	54LS73	
	TI	**SN54LS73A**	715
SN54LS73A	National	DM54LS73	
		DM54LS73A	
	Signetics	54LS73	
	TI	**SN54LS73A**	715
◆SN54LS74	**Fairchild**	**54LS74**	608,612,621,623
	Motorola	**SN54LS74A**	1126
	National	DM54LS74	
		DM54LS74A	
	SGS	T54LS74	
	Signetics	54LS74	
	TI	**SN54LS74A**	715
SN54LS74A	**Fairchild**	**54LS74**	608,612,621,623
	National	DM54LS74	
		DM54LS74A	
	SGS	T54LS74	
	Signetics	54LS74	
	TI	**SN54LS74A**	715
SN54LS75	National	DM54LS75	
	Signetics	54LS75	
	TI	**SN54LS75**	715
SN54LS76A	National	DM54LS76	
	Signetics	54LS76	
	TI	**SN54LS76A**	715
SN54LS77	National	DM54LS77	
SN54LS78A	National	DM54LS78	
	TI	**SN54LS78A**	715
◆SN54LS83	**Fairchild**	**54LS83A**	608,612,621,623
	Motorola	**SN54LS83A**	1132
	National	DM54LS83A	
	SGS	T54LS83	
	Signetics	54LS83	
		54LS83A	
	TI	**SN54LS83A**	715
SN54LS83A	**Fairchild**	**54LS83A**	608,612,621,623
	National	DM54LS83A	
	SGS	T54LS83	
	Signetics	54LS83	
		54LS83A	
	TI	**SN54LS83A**	715
SN54LS85	**Fairchild**	**54LS85**	608,612,621,623
	National	DM54LS85	
	Signetics	54LS85	
	TI	**SN54LS85**	715
SN54LS86	National	DM54LS86	
	SGS	T54LS86	
	Signetics	54LS86	
	TI	**SN54LS86A**	715
◆SN54LS89	Signetics	54LS89	
SN54LS90	National	DM54LS90	
	SGS	T54LS90	
	Signetics	54LS90	
	TI	**SN54LS90**	715
SN54LS91	**TI**	**SN54LS91**	715
SN54LS92	National	DM54LS92	
	SGS	T54LS92	
	Signetics	54LS92	
	TI	**SN54LS92**	715
SN54LS93	National	DM54LS93	
	SGS	T54LS93	
	Signetics	54LS93	
	TI	**SN54LS93**	715
SN54LS95B	**Fairchild**	**54LS95B**	608,612,621,623
	National	DM54LS95B	
	SGS	T54LS95	
	Signetics	54LS95B	
	TI	SN54LS95B	
◆SN54S112	**TI**	**SN54S112**	716
◆SN54S113	**TI**	**SN54S113**	716
SN74ALS00	National	DM74ALS00	
	TI	SN74ALS00A	
SN74ALS02	National	DM74ALS02	
	TI	SN74ALS02	
SN74ALS04	National	DM74ALS04	
	TI	SN74ALS04A	
SN74ALS08	National	DM74ALS08	
	TI	SN74ALS08	
SN74ALS09	National	DM74ALS09	
	TI	SN74ALS09	
SN74ALS160	National	DM74ALS160	
	TI	SN74ALS160A	
SN74ALS161	National	DM74ALS161	
	TI	SN74ALS161A	
SN74ALS162	National	DM74ALS162	
	TI	SN74ALS162A	
SN74ALS163	National	DM74ALS163	
	TI	SN74ALS163A	
SN74ALS192	National	DM74ALS192	
	TI	SN74ALS192	
SN74ALS193	National	DM74ALS193	
	TI	SN74ALS193	
SN74ALS240	National	DM74ALS240	
	TI	SN74ALS240A	
SN74ALS241	National	DM74ALS241	
	TI	SN74ALS241A	
SN74ALS242	National	DM74ALS242	
	TI	SN74ALS242	
SN74ALS243	National	DM74ALS243	
	TI	SN74ALS243A	

◆ Discontinued

The manufacturers report their devices can be used as direct replacements.
Performance details often differ, so compare the specifications considering your requirements.

Motorola Semiconductor Products (Cont'd)

Manufacturer Device	Replacement Source	Device	IC Master Page
SN74ALS244	National	DM74ALS244	
	TI	SN74ALS244A	
SN74ALS245	National	DM74ALS245	
	TI	SN74ALS245A	
SN74ALS273	National	DM74ALS273	
	TI	SN74ALS273	
SN74ALS32	National	DM74ALS32	
	TI	SN74ALS32	
SN74ALS373	National	DM74ALS373	
	TI	SN74ALS373	
SN74ALS374	National	DM74ALS374	
	TI	SN74ALS374	
SN74ALS377	National	DM74ALS377	
SN74ALS573	National	DM74ALS573	
	TI	SN74ALS573	
SN74ALS574	National	DM74ALS574	
	TI	SN74ALS574	
SN74ALS576	National	DM74ALS576	
	TI	SN74ALS576	
SN74ALS580	National	DM74ALS580	
	TI	SN74ALS580	
SN74ALS620	National	DM74ALS620	
	TI	SN74ALS620A	
SN74ALS621	National	DM74ALS621	
	TI	SN74ALS621A	
SN74ALS622	National	DM74ALS622	
SN74ALS623	National	DM74ALS623	
	TI	SN74ALS623A	
SN74ALS639	TI	SN74ALS639A	
SN74ALS640	National	DM74ALS640	
	TI	SN74ALS640A	
SN74ALS641	National	DM74ALS641	
	TI	SN74ALS641A	
SN74ALS642	National	DM74ALS642	
	TI	SN74ALS642A	
SN74ALS643	National	DM74ALS643	
	TI	SN74ALS643A	
SN74ALS644	National	DM74ALS644	
	TI	SN74ALS644A	
SN74ALS646	National	DM74ALS646	
SN74ALS647	National	DM74ALS647	
SN74ALS648	National	DM74ALS648	
SN74ALS649	National	DM74ALS649	
SN74ALS690	National	DM74ALS690	
SN74ALS691	National	DM74ALS691	
SN74ALS692	National	DM74ALS692	
SN74ALS693	National	DM74ALS693	
SN74ALS697	National	DM74ALS697	
SN74ALS698	National	DM74ALS698	
SN74ALS699	National	DM74ALS699	
SN74ALS74	National	DM74ALS74	
	TI	SN74ALS74A	
SN74ALS873	National	DM74ALS873	
	TI	SN74ALS873	
SN74ALS874	National	DM74ALS874	
	TI	SN74ALS874	
SN74ALS876	National	DM74ALS876	
	TI	SN74ALS876	
SN74ALS880	National	DM74ALS880	
	TI	SN74ALS880	
SN74LS00	**Fairchild**	**74LS00**	**5311**
	Hitachi	HD74LS00	
	National	DM74LS00	
	Panasonic	DN74LS00	
	SGS	T74LS00	
	Signetics	**74LS00**	**1156**
	TI	SN74LS00	
SN74LS01	Fairchild	74LS01	
	Hitachi	HD74LS01	
	National	DM74LS01	
	Panasonic	DN74LS01	
	Signetics	**74LS01**	**1156**
	TI	SN74LS01	
SN74LS02	**Fairchild**	**74LS02**	**5311**
	Hitachi	HD74LS02	
	National	DM74LS02	
	Panasonic	DN74LS02	
	SGS	T74LS02	
	Signetics	**74LS02**	**1156**
	TI	SN74LS02	
SN74LS03	**Fairchild**	**74LS03**	**5311**
	Hitachi	HD74LS03	
	National	DM74LS03	
	Panasonic	DN74LS03	
	SGS	T74LS03	
	TI	SN74LS03	
SN74LS04	**Fairchild**	**74LS04**	**5311**
	Hitachi	HD74LS04	
	National	DM74LS04	
SN74LS04	Panasonic	DN74LS04	
	SGS	T74LS04	
	Signetics	**74LS04**	**1156**
	TI	SN74LS04	
SN74LS05	**Fairchild**	**74LS05**	**5311**
	Hitachi	HD74LS05	
	National	DM74LS05	
	Panasonic	DN74LS05	
	SGS	T74LS05	
	Signetics	**74LS05**	**1156**
	TI	SN74LS05	
SN74LS08	**Fairchild**	**74LS08**	**5311**
	Hitachi	HD74LS08	
	National	DM74LS08	
	Panasonic	DN74LS08	
	SGS	T74LS08	
	Signetics	**74LS08**	**1156**
	TI	SN74LS08	
SN74LS09	**Fairchild**	**74LS09**	**5311**
	Hitachi	HD74LS09	
	National	DM74LS09	
	Panasonic	DN74LS09	
	SGS	T74LS09	
	TI	SN74LS09	
SN74LS10	**Fairchild**	**74LS10**	**5311**
	Hitachi	HD74LS10	
	National	DM74LS10	
	Panasonic	DN74LS10	
	SGS	T74LS10	
	Signetics	**74LS10**	**1156**
	TI	SN74LS10	
SN74LS109	**Fairchild**	**74LS109**	**5311**
	Hitachi	HD74LS109	
	Motorola	**SN74LS109A**	**1126**
	National	DM74LS109	
	Panasonic	DN74LS109	
	SGS	T74LS109	
	Signetics	**74LS109**	**1156**
	TI	SN74LS109A	
SN74LS109A	**Fairchild**	**74LS109**	**5311**
	Hitachi	HD74LS109	
	Motorola	SN74LS109	
	National	DM74LS109	
	Panasonic	DN74LS109	
	SGS	T74LS109	
	Signetics	**74LS109**	**1156**
	TI	SN74LS109A	
SN74LS11	**Fairchild**	**74LS11**	**5311**
	Hitachi	HD74LS11	
	National	DM74LS11	
	Panasonic	DN74LS11	
	SGS	T74LS11	
	Signetics	**74LS11**	**1156**
	TI	SN74LS11	
SN74LS112A	**Fairchild**	**74LS112**	**5311**
	Hitachi	HD74LS112	
	National	DM74LS112	
	Panasonic	DN74LS112	
	SGS	T74LS112	
	Signetics	**74LS112**	**1156**
	TI	SN74LS112A	
SN74LS113A	**Fairchild**	**74LS113**	**5311**
	Hitachi	HD74LS113	
	National	DM74LS113	
	Panasonic	DN74LS113	
	SGS	T74LS113	
	Signetics	**74LS113**	**1156**
	TI	SN74LS113A	
◆SN74LS114	**Fairchild**	**74LS114**	**5311**
	Hitachi	HD74LS114	
	Motorola	**SN74LS114A**	**1126**
	National	DM74LS114	
	Panasonic	DN74LS114	
	SGS	T74LS114	
	TI	SN74LS114A	
SN74LS114A	**Fairchild**	**74LS114**	**5311**
	Hitachi	HD74LS114	
	National	DM74LS114	
	Panasonic	DN74LS114	
	SGS	T74LS114	
	TI	SN74LS114A	
SN74LS12	Hitachi	HD74LS12	
	National	DM74LS12	
	Panasonic	DN74LS12	
	Signetics	74LS12	
	TI	SN74LS12	
SN74LS122	National	DM74LS122	
	TI	SN74LS122	
SN74LS123	Hitachi	HD74LS123	
	National	DM74LS123	
	Panasonic	DN74LS123	
	TI	SN74LS123	
SN74LS125A	Fairchild	74LS125A	
	National	DM74LS125	
	Panasonic	DN74LS125A	
	SGS	T74LS125	
	Signetics	**74LS125A**	**1157**
	TI	SN74LS125A	
◆SN74LS126	**Fairchild**	**74LS126**	**5311**
	Motorola	**SN74LS126A**	**1124**
	National	DM74LS126	
	SGS	T74LS126	
	Signetics	**74LS126A**	**1157**
	TI	SN74LS126A	
SN74LS126A	**Fairchild**	**74LS126**	**5311**
	National	DM74LS126	
	SGS	T74LS126	
	Signetics	**74LS126A**	**1157**
	TI	SN74LS126A	
SN74LS13	**Fairchild**	**74LS13**	**5311**
	Hitachi	HD74LS13	
	National	DM74LS13	
	Panasonic	DN74LS13	
	SGS	T74LS13	
	Signetics	**74LS13**	**1156**
	TI	SN74LS13	
SN74LS132	**Fairchild**	**74LS132**	**5311**
	Hitachi	HD74LS132	
	National	DM74LS132	
	Panasonic	DN74LS132	
	SGS	T74LS132	
	Signetics	**74LS132**	**1157**
	TI	SN74LS132	
SN74LS133	**Fairchild**	**74LS133**	**5311**
	SGS	TL74LS133	
SN74LS136	**Fairchild**	**74LS136**	**5311**
	Hitachi	HD74LS136	
	National	DM74LS136	
	Panasonic	DN74LS136	
	SGS	T74LS136	
	Signetics	**74LS136**	**1157**
	TI	SN74LS136	
SN74LS137	TI	SN74LS137	
SN74LS138	**Fairchild**	**74LS138**	**5311**
	Hitachi	HD74LS138	
	National	DM74LS138	
	Panasonic	DN74LS138	
	SGS	T74LS138	
	Signetics	**74LS138**	**1157**
	TI	SN74LS138	
SN74LS139	**Fairchild**	**74LS139**	**5311**
	Hitachi	HD74LS139	
	National	DM74LS139	
	Panasonic	DN74LS139	
	SGS	T74LS139	
	Signetics	**74LS139**	**1157**
	TI	SN74LS139A	
SN74LS14	**Fairchild**	**74LS14**	**5311**
	Hitachi	HD74LS14	
	National	DM74LS14	
	Panasonic	DN74LS14	
	Signetics	**74LS14**	**1156**
	TI	SN74LS14	
SN74LS145	Fairchild	74LS145	
	Panasonic	DN74LS145	
	TI	SN74LS145	
SN74LS147	TI	SN74LS147	
SN74LS148	Hitachi	HD74LS148	
	TI	SN74LS148	
SN74LS15	**Fairchild**	**74LS15**	**5311**
	National	DM74LS15	
	Panasonic	DN74LS15	
	SGS	T74LS15	
	TI	SN74LS15	
SN74LS151	**Fairchild**	**74LS151**	**5311**
	Hitachi	HD74LS151	
		HD74LS151A	
	National	DM74LS151	
	Panasonic	DN74LS151	
	SGS	T74LS151	
	Signetics	**74LS151**	**1157**
	TI	SN74LS151	
◆SN74LS152	Hitachi	HD74LS152	
	Signetics	74LS152	
SN74LS153	**Fairchild**	**74LS153**	**5311**
	Hitachi	HD74LS153	
	National	DM74LS153	
	Panasonic	DN74LS153	
	SGS	T74LS153	
	Signetics	**74LS153**	**1157**
	TI	SN74LS153	
SN74LS155	**Fairchild**	**74LS155**	**5311**
	Hitachi	HD74LS155	
	National	DM74LS155	
SN74LS155	Panasonic	DN74LS155	
	Signetics	**74LS155**	**1157**
	TI	SN74LS155A	
SN74LS156	**Fairchild**	**74LS156**	**5311**
	Hitachi	HD74LS156	
	National	DM74LS156	
	Panasonic	DN74LS156	
	SGS	T74LS156	
	Signetics	**74LS156**	**1157**
	TI	SN74LS156	
SN74LS157	**Fairchild**	**74LS157**	**5311**
	Hitachi	HD74LS157	
	National	DM74LS157	
	Panasonic	DN74LS157	
	SGS	T74LS157	
	Signetics	**74LS157**	**1157**
	TI	SN74LS157	
SN74LS158	**Fairchild**	**74LS158**	**5311**
	Hitachi	HD74LS158	
	National	DM74LS158	
	Panasonic	DN74LS158	
	SGS	T74LS158	
	Signetics	**74LS158**	**1157**
	TI	SN74LS158	
SN74LS160A	**Fairchild**	**74LS160**	**5311**
	Hitachi	HD74LS160A	
	National	DM74LS160	
	Panasonic	DN74LS160A	
	SGS	T74LS160	
	Signetics	74LS160	
		74LS160A	**1157**
	TI	SN74LS160A	
SN74LS161A	Fairchild	74LS161A	
	Hitachi	HD74LS161A	
	National	DM74LS161	
	Panasonic	DN74LS161A	
	SGS	T74LS161	
	Signetics	**74LS161A**	**1157**
	TI	SN74LS161A	
SN74LS162A	**Fairchild**	**74LS162**	**5311**
	Hitachi	HD74LS162A	
	National	DM74LS162	
	Panasonic	DN74LS162A	
	SGS	T74LS162	
	Signetics	**74LS162A**	**1157**
	TI	SN74LS162A	
SN74LS163A	**Fairchild**	**74LS163**	**5311**
	Hitachi	HD74LS163	
		HD74LS163A	
	National	DM74LS163	
	Panasonic	DN74LS163A	
	SGS	T74LS163	
	Signetics	**74LS163A**	**1157**
	TI	SN74LS163A	
◆SN74LS164	**Fairchild**	**74LS164**	**5311**
	Hitachi	HD74LS164	
	Motorola	SN74LS164A	
	National	DM74LS164	
	Panasonic	DN74LS164	
	SGS	T74LS164	
	Signetics	**74LS164**	**1157**
		74LS164A	
	TI	SN74LS164	
SN74LS164A	**Fairchild**	**74LS164**	**5311**
	Hitachi	HD74LS164	
	National	DM74LS164	
	Panasonic	DN74LS164	
	SGS	T74LS164	
	Signetics	**74LS164**	**1157**
		74LS164A	
	TI	SN74LS164	
SN74LS165	**Fairchild**	**74LS165**	**5311**
	SGS	T74LS165	
	TI	SN74LS165A	
SN74LS166	TI	SN74LS166A	
SN74LS169	**Fairchild**	**74LS169**	**5311**
	Hitachi	HD74LS169	
	National	DM74LS169	
	SGS	T74LS169	
	Signetics	**74LS169A**	**1157**
	TI	SN74LS169	
SN74LS170	**Fairchild**	**74LS170**	**5311**
	National	DM74LS170	
	Panasonic	DN74LS170	
	SGS	T74LS170	
	Signetics	**74LS170**	**1157**
	TI	SN74LS170	
◆SN74LS173	Fairchild	74LS173	
	Motorola	**SN74LS173A**	**1126**
	National	DM74LS173	
	Panasonic	DN74LS173	
	SGS	T74LS173	

(Continued)

◆ Discontinued

Bold face device numbers indicate manufacturers data is provided in the IC Master on the pages noted.

Motorola Semiconductor Products (Cont'd)

Manufacturer Device	Replacement Source	Device	IC Master Page
◆SN74LS173	**Signetics**	**74LS173**	1157.1158
	TI	SN74LS173A	
SN74LS173A	Fairchild	74LS173	
	National	DM74LS173	
	Panasonic	DN74LS173	
	SGS	T74LS173	
	Signetics	**74LS173**	1157.1158
	TI	SN74LS173A	
SN74LS174	**Fairchild**	**74LS174**	5311
	Hitachi	HD74LS174	
	National	DM74LS174	
	Panasonic	DN74LS174	
	SGS	T74LS174	
	Signetics	**74LS174**	1157
	TI	SN74LS174	
SN74LS175	**Fairchild**	**74LS175**	5311
	Hitachi	HD74LS175	
	Panasonic	DN74LS175	
	SGS	T74LS175	
	Signetics	74LS175	
	TI	SN74LS175	
SN74LS181	**Fairchild**	**74LS181**	5311
	Hitachi	HD74LS181	
	SGS	T74LS181	
	Signetics	**74LS181**	1157
	TI	SN74LS181	
SN74LS183	TI	SN74LS183	
SN74LS190	Fairchild	74LS190	
	Hitachi	HD74LS190	
	National	DM74LS190	
	Panasonic	DN74LS190	
	SGS	T74LS190	
	TI	SN74LS190	
SN74LS191	Fairchild	74LS191	
	Hitachi	HD74LS191	
	National	DM74LS191	
	Panasonic	DN74LS191	
	SGS	T74LS191	
	Signetics	**74LS191**	1157
	TI	SN74LS191	
SN74LS192	**Fairchild**	**74LS192**	5311
	Hitachi	HD74LS192	
	National	DM74LS192	
	Panasonic	DN74LS192	
	SGS	T74LS192	
	Signetics	**74LS192**	1157
	TI	SN74LS192	
SN74LS193	**Fairchild**	**74LS193**	5311
	Hitachi	HD74LS193	
	National	DM74LS193	
	Panasonic	DN74LS193	
	SGS	T74LS193	
	Signetics	**74LS193**	1157
	TI	SN74LS193	
◆SN74LS194	**Fairchild**	**74LS194A**	5311
	Hitachi	HD74LS194A	
	Motorola	**SN74LS194A**	1128
	National	DM74LS194	
	Panasonic	DN74LS194A	
	SGS	T74LS194A	
	Signetics	**74LS194A**	1157
	TI	SN74LS194A	
SN74LS194A	**Fairchild**	**74LS194A**	5311
	Hitachi	HD74LS194A	
	National	DM74LS194	
	Panasonic	DN74LS194A	
	SGS	T74LS194A	
	Signetics	**74LS194A**	1157
	TI	SN74LS194A	
◆SN74LS195	**Fairchild**	**74LS195A**	5311
	Hitachi	HD74LS195A	
	Motorola	**SN74LS195A**	1128
	National	DM74LS195	
	Panasonic	DN74LS195A	
	SGS	L7924	
		T74LS195A	
	Signetics	**74LS195A**	1157
	TI	SN74LS195A	
◆SN74LS1954	**Fairchild**	**74LS195A**	5311
	Hitachi	HD74LS195A	
	Motorola	**SN74LS195A**	1128
	National	DM74LS195	
	Panasonic	DN74LS195A	
	SGS	L7924	
		T74LS195A	
	Signetics	**74LS195A**	1157
	TI	SN74LS195A	
SN74LS195A	**Fairchild**	**74LS195A**	5311
	Hitachi	HD74LS195A	
	National	DM74LS195	
	Panasonic	DN74LS195A	
	SGS	L7924	
		T74LS195A	
	Signetics	**74LS195A**	1157
	TI	SN74LS195A	
SN74LS196	**Fairchild**	**74LS196**	5311
	Hitachi	HD74LS196	
	National	DM74LS196	
	Panasonic	DN74LS196	
	SGS	574LS196	
	Signetics	N82S80	
	TI	SN74LS196	
SN74LS197	**Fairchild**	**74LS197**	5311
	Hitachi	HD74LS197	
	National	DM74LS197	
	Panasonic	DN74LS197	
	SGS	T74LS197	
	Signetics	**74LS197**	1157
	TI	SN74LS197	
SN74LS20	**Fairchild**	**74LS20**	5311
	Hitachi	HD74LS20	
	National	DM74LS20	
	Panasonic	DN74LS20	
	SGS	T74LS20	
	Signetics	**74LS20**	1156
	TI	SN74LS20	
SN74LS21	**Fairchild**	**74LS21**	5311
	Hitachi	HD74LS21	
	National	DM74LS21	
	Panasonic	DN74LS21	
	SGS	T74LS21	
	Signetics	**74LS21**	1156
	TI	SN74LS21	
SN74LS22	Fairchild	74LS22	
	Hitachi	HD74LS22	
	National	DM74LS22	
	Panasonic	DN74LS22	
	SGS	T74LS22	
	TI	SN74LS22	
SN74LS221	Fairchild	74LS221	
	Hitachi	HD74LS221	
	National	DM74LS221	
	TI	SN74LS221	
SN74LS240	**Fairchild**	**74LS240**	5311
	Hitachi	HD74LS240	
	MMI	SN74LS240	
	Panasonic	DN74LS240	
	SGS	T74LS240	
	Signetics	**74LS240**	1157
	TI	SN74LS240	
SN74LS241	**Fairchild**	**74LS241**	5311
	Hitachi	HD74LS241	
	MMI	SN74LS241	
	Panasonic	DN74LS241	
	SGS	T74LS241	
	Signetics	**74LS241**	1157
	TI	SN74LS241	
SN74LS242	Fairchild	74LS242A	
	Signetics	**74LS242**	1158
	TI	SN74LS242	
SN74LS243	Fairchild	74LS243A	
	Signetics	**74LS243**	1158
	TI	SN74LS243	
SN74LS244	**Fairchild**	**74LS244**	5311
	Hitachi	HD74LS244	
	MMI	SN74LS244	
	Panasonic	DN74LS244	
	SGS	T74LS244	
	Signetics	**74LS244**	1158
	TI	SN74LS244	
SN74LS247	**Fairchild**	**74LS247**	5311
	Hitachi	HD74LS247	
	National	DM74LS247	
	TI	SN74LS247	
SN74LS248	**Fairchild**	**74LS248**	5311
	Hitachi	HD74LS248	
	National	DM74LS248	
	SGS	T74LS248	
	TI	SN74LS248	
SN74LS249	**Fairchild**	**74LS249**	5311
	Hitachi	HD74LS249	
	National	DM74LS249	
	SGS	T74LS249	
	TI	SN74LS249	
SN74LS251	**Fairchild**	**74LS251**	5311
	Hitachi	HD74LS251	
	National	DM74LS251	
	Panasonic	DN74LS251	
	SGS	T74LS251	
SN74LS251	**Signetics**	**74LS251**	1158
	TI	SN74LS251	
SN74LS253	**Fairchild**	**74LS253**	5311
	Hitachi	HD74LS253	
	National	DM74LS253	
		DM8214	
	Panasonic	DN74LS253	
	SGS	T74LS253	
	Signetics	**74LS253**	1158
	TI	SN74LS253	
SN74LS256	**Fairchild**	**74LS256**	5311
	Signetics	**74LS256**	1158
◆SN74LS257	Fairchild	74LS257A	
	Hitachi	HD74LS257	
	Motorola	**SN74LS257A**	1129
	National	DM74LS257	
	SGS	T74LS257	
	Signetics	74LS257	
		74LS257A	1158
	TI	SN74LS257B	
SN74LS257A	Fairchild	74LS257A	
	Hitachi	HD74LS257	
	National	DM74LS257	
	SGS	T74LS257	
	Signetics	74LS257	
		74LS257A	1158
	TI	SN74LS257B	
◆SN74LS258	Fairchild	74LS258A	
	Hitachi	HD74LS258	
	Motorola	**SN74LS258A**	1129
	National	DM74LS258	
	Panasonic	DN74LS258A	
	SGS	T74LS258	
	Signetics	74LS258	
	TI	SN74LS258B	
SN74LS258A	Fairchild	74LS258A	
	Hitachi	HD74LS258	
	National	DM74LS258	
	Panasonic	DN74LS258A	
	SGS	T74LS258	
	Signetics	74LS258	
	TI	SN74LS258B	
SN74LS259	**Fairchild**	**74LS259**	5311
	SGS	T74LS259	
	Signetics	**74LS259**	1158
	TI	SN74LS259B	
SN74LS26	**Fairchild**	**74LS26**	5311
	Hitachi	HD74LS26	
	National	DM74LS26	
	Panasonic	DN74LS26	
	SGS	T74LS26	
	Signetics	**74LS26**	1156
	TI	SN74LS26	
SN74LS260	**Fairchild**	**74LS260**	5311
	Signetics	**74LS260**	1158
SN74LS266	**Fairchild**	**74LS266**	5311
	National	DM74LS266	
	Panasonic	DN74LS266	
	Raytheon	RC8242	
	SGS	T74LS266	
	Signetics	**74LS266**	1158
		N8242	1175
	TI	SN74LS266	
SN74LS27	**Fairchild**	**74LS27**	5311
	Hitachi	HD74LS27	
	National	DM74LS27	
	Panasonic	DN74LS27	
	SGS	T74LS27	
	Signetics	**74LS27**	1156
	TI	SN74LS27	
SN74LS273	**Fairchild**	**74LS273**	5311
	MMI	SN74LS273	
	SGS	T74LS273	
	Signetics	74LS273	
	TI	SN74LS273	
SN74LS279	**Fairchild**	**74LS279**	5311
	Hitachi	HD74LS279	
	National	DM74LS279	
	Panasonic	DN74LS279	
	SGS	T74LS279	
	Signetics	74LS279	
	TI	SN74LS279A	
SN74LS28	**Fairchild**	**74LS28**	5311
	SGS	T74LS28	
	TI	SN74LS28	
SN74LS280	Hitachi	HD74LS280	
	Panasonic	DN74LS280	
	SGS	T74LS280	
	TI	SN74LS280	
SN74LS283	**Fairchild**	**74LS283**	5311
	Hitachi	HD74LS283	
		HD74LS283A	
SN74LS283	National	DM74LS283	
	Panasonic	DN74LS283	
	SGS	T74LS283	
	Signetics	**74LS283**	1158
	TI	SN74LS283	
◆SN74LS289	Cypress	CY74S189	
	Fairchild	74LS189	
	National	DM74LS189	
	TI	SN74LS189A	
SN74LS290	**Fairchild**	**74LS290**	5311
	Hitachi	HD74LS290	
	National	DM74LS290	
	Panasonic	DN74LS290	
	SGS	T74LS290	
	Signetics	**74LS290**	1158
	TI	SN74LS290	
SN74LS293	**Fairchild**	**74LS293**	5311
	Hitachi	HD74LS293	
	National	DM74LS293	
	Panasonic	DN74LS293	
	SGS	T74LS293	
	Signetics	**74LS293**	1158
	TI	SN74LS293	
SN74LS295A	**Fairchild**	**74LS295A**	5311
	SGS	T74LS295A	
	Signetics	74LS295A	
		74LS295B	1158
	TI	SN74LS295B	
SN74LS298	**Fairchild**	**74LS298**	5311
	Hitachi	HD74LS298	
	SGS	T74LS298	
	Signetics	**74LS298**	1158
	TI	SN74LS298	
SN74LS299	AMD	SN74LS299	
	Fairchild	**74LS299**	5311
	Hitachi	HD74LS299	
	SGS	T74LS299	
	TI	SN74LS299	
SN74LS30	**Fairchild**	**74LS30**	5311
	Hitachi	HD74LS30	
	National	DM74LS30	
	Panasonic	DN74LS30	
	SGS	T74LS30	
	Signetics	**74LS30**	1156
	TI	SN74LS30	
SN74LS322	AMD	SN74LS322	
	Fairchild	**74LS322**	5311
	TI	SN74LS322A	
SN74LS323	AMD	SN74LS323	
	Fairchild	**54LS323**	614
		74LS323	5311
	TI	**SN54LS323**	715
		SN74LS323	
SN74LS33	**Fairchild**	**74LS33**	5311
	Panasonic	DN74LS33	
	SGS	T74LS33	
	Signetics	**74LS33**	1156
	TI	SN74LS33	
SN74LS352	**Fairchild**	**74LS352**	5311
	National	DM74LS352	
	SGS	T74LS352	
	TI	SN74LS352	
SN74LS353	**Fairchild**	**74LS353**	5311
	National	DM74LS353	
	SGS	T74LS353	
	TI	SN74LS353	
SN74LS365A	Fairchild	74LS365A	
	National	DM74LS365	
	Panasonic	DN74LS365A	
	SGS	T74LS365	
		T74LS365A	
	Signetics	74LS365	
		74LS365A	1158
	TI	SN74LS365A	
SN74LS366A	Fairchild	74LS366A	
	National	DM74LS366	
	Panasonic	DN74LS366A	
	SGS	T74LS366	
		T74LS366A	
	Signetics	**74LS366A**	1158
	TI	SN74LS366A	
SN74LS367A	Fairchild	74LS367A	
	Hitachi	HD74LS367	
		HD74LS367A	
	National	DM74LS367	
	Panasonic	DN74LS367A	
	SGS	T74LS367	
		T74LS367A	
	Signetics	74LS367	
		74LS367A	1158
	TI	SN74LS367A	

(Continued)

(Continued)

◆ Discontinued

The manufacturers report their devices can be used as direct replacements.
Performance details often differ, so compare the specifications considering your requirements.

Motorola Semiconductor Products (Cont'd)

Manufacturer Device	Replacement Source	Device	IC Master Page
SN74LS368A	Fairchild	74LS368A	
	Hitachi	HD74LS368	
	National	DM74LS368	
	Panasonic	DN74LS368A	
	SGS	T74LS368	
	Signetics	74LS368	
		74LS368A	**1158**
	TI	SN74LS368A	
SN74LS37	**Fairchild**	**74LS37**	**5311**
	Hitachi	HD74LS37	
	National	DM74LS37	
	Panasonic	DN74LS37	
	SGS	T74LS37	
	Signetics	**74LS37**	**1156**
	TI	SN74LS37	
SN74LS373	**Fairchild**	**74LS373**	**5311**
	MMI	SN74LS373	
	Panasonic	DN74LS373	
	SGS	T74LS373	
	Signetics	**74LS373**	**1158**
	TI	SN74LS373	
SN74LS374	**Fairchild**	**74LS374**	**5311**
	MMI	SN74LS374	
	National	DM74LS374	
	SGS	T74LS374	
	Signetics	**74LS374**	**1158**
	TI	SN74LS374	
SN74LS375	**Fairchild**	**74LS375**	**5311**
	Signetics	**74LS375**	**1158**
	TI	SN74LS375	
SN74LS377	**Fairchild**	**74LS377**	**5311**
	MMI	SN74LS377	
	SGS	T74LS377	
	Signetics	**74LS377**	**1158**
	TI	SN74LS377	
SN74LS378	AMD	SN74LS378	
	Fairchild	**74LS378**	**5311**
	SGS	T74LS378	
	Signetics	**74LS378**	**1158**
	TI	SN74LS378	
SN74LS379	AMD	SN74LS379	
	Fairchild	**74LS379**	**5311**
	SGS	T74LS379	
	TI	SN74LS379	
SN74LS38	**Fairchild**	**74LS38**	**5311**
	Hitachi	HD74LS38	
	National	DM74LS38	
	Panasonic	DN74LS38	
	SGS	T74LS38	
	Signetics	**74LS38**	**1156**
	TI	SN74LS38	
SN74LS385	AMD	SN74LS385	
	TI	SN74LS385	
SN74LS386	Hitachi	HD74LS386	
	National	DM74LS386	
	Panasonic	DN74LS386	
	TI	SN74LS386A	
SN74LS390	**Fairchild**	**74LS390**	**5311**
	Panasonic	DN74LS390	
	SGS	T74LS390	
	TI	SN74LS390	
SN74LS393	**Fairchild**	**74LS393**	**5311**
	Panasonic	DN74LS393	
	SGS	T74LS393	
	Signetics	**74LS393**	**1158**
	TI	SN74LS393	
◆SN74LS395	**Fairchild**	**74LS395**	**5311**
	National	DM74LS395	
	Panasonic	DN74LS395A	
	SGS	T74LS395	
	Signetics	74LS395	
	TI	SN74LS395A	
SN74LS398	TI	SN74LS398	
SN74LS399	AMD	SN74LS399	
	SGS	T74LS399	
	TI	SN74LS399	
SN74LS40	**Fairchild**	**74LS40**	**5311**
	Hitachi	HD74LS40	
	National	DM74LS40	
	Panasonic	DN74LS40	
	SGS	T74LS40	
	Signetics	**74LS40**	**1156**
	TI	SN74LS40	
SN74LS42	**Fairchild**	**74LS42**	**5311**
	Hitachi	HD74LS42	
	National	DM74LS42	
	Panasonic	DN74LS42	
	SGS	T74LS42	
			(Continued)
SN74LS42	**Signetics**	**74LS42**	**1156**
	TI	SN74LS42	
SN74LS47	**Fairchild**	**74LS47**	**5311**
	Hitachi	HD74LS47	
	National	DM74LS47	
	SGS	T74LS47	
	TI	SN74LS47	
SN74LS48	**Fairchild**	**74LS48**	**5311**
	Hitachi	HD74LS48	
	National	DM74LS48	
	SGS	T74LS48	
	Signetics	74LS48	
	TI	SN74LS48	
SN74LS49	Fairchild	74LS49	
	Hitachi	HD74LS49	
	National	DM74LS49	
	SGS	T74LS49	
	TI	SN74LS49	
SN74LS490	**Fairchild**	**74LS490**	**5311**
	Panasonic	DN74LS490	
	SGS	T74LS490	
	Signetics	**74LS490**	**1159**
	TI	SN74LS490	
◆SN74LS502	**Fairchild**	**74LS502**	**5311**
◆SN74LS503	**Fairchild**	**74LS503**	**5311**
SN74LS51	**Fairchild**	**74LS51**	**5311**
	Hitachi	HD74LS51	
	National	DM74LS51	
	Panasonic	DN74LS51	
	SGS	T74LS51	
	Signetics	**74LS51**	**1156**
	TI	SN74LS51	
SN74LS54	**Fairchild**	**74LS54**	**5311**
	Hitachi	HD74LS54	
	National	DM74LS54	
	Panasonic	DN74LS54	
	SGS	T74LS54	
	Signetics	**74LS54**	**1156**
	TI	SN74LS54	
SN74LS540	**Fairchild**	**74LS540**	**5311**
	Signetics	**74LS540**	**1159**
	TI	SN74LS540	
SN74LS541	Fairchild	74LS541	
	Signetics	**74LS541**	**1159**
	TI	SN74LS541	
SN74LS55	**Fairchild**	**74LS55**	**5311**
	Hitachi	HD74LS55	
	National	DM74LS55	
	Panasonic	DN74LS55	
	SGS	T74LS55	
	TI	SN74LS55	
SN74LS568	AMD	SN74LS568	
	Signetics	74LS568	
SN74LS569	AMD	SN74LS569	
	Signetics	74LS569	
◆SN74LS573	**Fairchild**	**74LS573**	**5311**
◆SN74LS574	**Fairchild**	**74LS574**	**5311**
SN74LS604	TI	SN74LS604	
SN74LS605	TI	SN74LS605	
SN74LS606	TI	SN74LS606	
SN74LS607	TI	SN74LS607	
SN74LS621	TI	SN74LS621	
SN74LS622	TI	SN74LS622	
SN74LS640	**Signetics**	**74LS640**	**1159**
		N8T125	**1175**
	TI	SN74LS640	
SN74LS641	**Signetics**	**74LS641**	**1159**
	TI	SN74LS641	
SN74LS642	**Signetics**	**74LS642**	**1159**
	TI	SN74LS642	
SN74LS643	TI	SN74LS643	
SN74LS644	TI	SN74LS644	
SN74LS645	MMI	SN74LS645	
	Signetics	**74LS645**	**1159**
	TI	SN74LS645	
SN74LS668	TI	SN74LS668	
SN74LS669	TI	SN74LS669	
SN74LS670	**Fairchild**	**74LS670**	**5311**
	National	DM74LS670	
	SGS	T74LS670	
	Signetics	74LS670	
	TI	SN74LS670	
SN74LS673	TI	SN74LS673	
SN74LS674	TI	SN74LS674	
SN74LS696	National	DM74ALS696	
◆SN74LS73	Hitachi	HD74LS73	
	Motorola	**SN74LS73A**	**1126**
	National	DM74LS73	
	Panasonic	DN74LS73	
	Signetics	**74LS73**	**1156**
	TI	SN74LS73A	
SN74LS73A	Hitachi	HD74LS73	
	National	DM74LS73	
	Panasonic	DN74LS73	
	Signetics	**74LS73**	**1156**
	TI	SN74LS73A	
◆SN74LS74	**Fairchild**	**74LS74**	**5311**
	Hitachi	HD74LS74	
		HD74LS74A	
	Motorola	**SN74LS74A**	**1126**
	National	DM74LS74	
	Panasonic	DN74LS74A	
	SGS	T74LS74	
	Signetics	74LS74	
	TI	SN74LS74A	
SN74LS74A	**Fairchild**	**74LS74**	**5311**
	Hitachi	HD74LS74	
		HD74LS74A	
	National	DM74LS74	
	Panasonic	DN74LS74A	
	SGS	T74LS74	
	Signetics	74LS74	
	TI	SN74LS74A	
SN74LS75	Hitachi	HD74LS75	
	National	DM74LS75	
	Panasonic	DN74LS75	
	Signetics	**74LS75**	**1156**
	TI	SN74LS75	
SN74LS76A	Hitachi	HD74LS76	
	National	DM74LS76	
	Panasonic	DN74LS76	
	Signetics	**74LS76**	**1156**
	TI	SN74LS76A	
SN74LS78A	Hitachi	HD74LS78	
	National	DM74LS78	
	Panasonic	DN74LS78	
	TI	SN74LS78A	
◆SN74LS83	Fairchild	74LS83A	
	Hitachi	HD74LS183A	
		HD74LS83A	
	Motorola	**SN74LS83A**	**1132**
	National	DM74LS83A	
	Panasonic	DN74LS83A	
	SGS	T74LS83	
	Signetics	74LS83	
		74LS83A	**1156**
	TI	SN74LS83A	
SN74LS83A	Fairchild	74LS83A	
	Hitachi	HD74LS183A	
		HD74LS83A	
	National	DM74LS83A	
	Panasonic	DN74LS83A	
	SGS	T74LS83	
	Signetics	74LS83	
		74LS83A	**1156**
	TI	SN74LS83A	
SN74LS85	**Fairchild**	**74LS85**	**5311**
	Hitachi	HD74LS85	
	National	DM74LS85	
	Panasonic	DN74LS85	
	Signetics	**74LS85**	**1156**
	TI	SN74LS85	
SN74LS86	**Fairchild**	**74LS86**	**5311**
	Hitachi	HD74LS86	
	National	DM74LS86	
	Panasonic	DN74LS86	
	SGS	T74LS86	
	Signetics	**74LS86**	**1156**
	TI	SN74LS86A	
◆SN74LS89	Signetics	74LS89	
SN74LS90	**Fairchild**	**74LS90**	**5311**
	National	DM74LS90	
	Panasonic	DN74LS90	
	SGS	T74LS90	
	Signetics	**74LS90**	**1156**
	TI	SN74LS90	
SN74LS91	Hitachi	HD74LS91	
	TI	SN74LS91	
SN74LS92	**Fairchild**	**74LS92**	**5311**
	Hitachi	HD74LS92	
	National	DM74LS92	
	Panasonic	DN74LS92	
	SGS	T74LS92	
	Signetics	**74LS92**	**1156**
	TI	SN74LS92	
SN74LS93	**Fairchild**	**74LS93**	**5311**
	Hitachi	HD74LS93	
	National	DM74LS93	
	Panasonic	DN74LS93	
	SGS	T74LS93	
	Signetics	**74LS93**	**1156**
	TI	SN74LS93	
◆SN74LS95	**Fairchild**	**74LS95B**	**5311**
	Hitachi	HD74LS95B	
	Motorola	**SN74LS95B**	**1128**
	National	DM74LS95B	
	Panasonic	DN74LS95B	
	SGS	T74LS95	
		T74LS95B	
	Signetics	**74LS95B**	**1156**
	TI	SN74LS95B	
SN74LS95B	**Fairchild**	**74LS95B**	**5311**
	Hitachi	HD74LS95B	
	National	DM74LS95B	
	Panasonic	DN74LS95B	
	SGS	T74LS95	
		T74LS95B	
	Signetics	**74LS95B**	**1156**
	TI	SN74LS95B	
SN74S112	Fairchild	74S112	
	National	DM74S112	
	Signetics	**74S112**	**1156**
	TI	SN74S112	
◆SN74S113	Fairchild	74S113	
	National	DM74S113	
	Signetics	**74S113**	**1156**
	TI	SN74S113	
TCA4500	National	LM4500	
	Siemens	TCA4500	
TDA1085	Plessey	TDA1085	
TDA1085A	Plessey	TDA1085A	
TDA1327	Motorola	MC1327	
	TI	SN76227	
TL	**IPS**	**IP7815AC**	**3599**
	TI	TL780-15C	
TL431	Fairchild	μA431	
	TI	**TL431**	**720**
TL493	**Unitrode**	**UC493A**	**3739,3739**
TL494	Cherry	CS494M	
	Exar	**XR494**	**3557**
	Fairchild	μA494	
	IPS	**IP494A**	**3599**
	Sprague	ULN8194A	
		ULS-8194	
	TI	**TL494M**	**720**
		TL594M	**720**
	Unitrode	**UC494A**	**3739,3739**
TL495	**Exar**	**XR495**	**3558**
TL780-05C	IPS	IP780SAC	
	TI	TL780-05C	
TL780-12C	**IPS**	**IP7812AC**	**3599**
	TI	TL780-12C	
UDN2841	Sprague	UDN-2841	
	TI	UDN2841	
UDN2845	Sprague	UDN-2845	
	TI	UDN2845	
ULN2001	Exar	XR2001	
		XR2001C	
		XR2201C	
	Mitsubishi	M54524	
	Motorola	**MC1411**	**3212**
	NEC	μPA2001	
	RIFA	PBD3523-11	
	Sanyo	LB1231	
	SGS	L201	
		ULN2001	
	SiliconG	SG2001	
	Sprague	**ULN-2001**	**3269**
		ULQ-2001	
	TI	ULN2001A	
	Toshiba	TD62001	
		TD62101	
ULN2002	Exar	XR2002C	
		XR2202C	
	Fairchild	MC1412	
	Mitsubishi	M54525	
	Motorola	**MC1412**	**3212**
	NEC	μPA2002	
	RIFA	PBD352304	
	Sanyo	LB1232	
	SGS	L202	
		ULN2002	
	Signetics	NE5602	
	SiliconG	SG2002	
	Sprague	ULN-2002	
	TI	ULN2002A	
	Toshiba	TD62002	
ULN2003	Exar	XR2003C	
		XR2203C	
	Fairchild	MC1413	
	Mitsubishi	M54523	
	Motorola	**MC1413**	**3212**
	NEC	μPA2003	
	RIFA	PBD352303	
			(Continued)

◆ Discontinued

Bold face device numbers indicate manufacturers data is provided in the IC Master on the pages noted.

Motorola Semiconductor Products (Cont'd)

Manufacturer Device	Replacement Source	Device	IC Master Page
ULN2003	Sanyo	LB1233	
	SGS	L203	
		ULN2003	
	Signetics	NE5603	
		ULN2003	3721
	SiliconG	SG2003	
	Sprague	ULN-2003	
	Telefunken	TDA2003	
	TI	ULN2003A	
	Toshiba	TD62003	
		TD62103	
ULN2004	Exar	XR2204C	
	Mitsubishi	M54526	
	Motorola	**MC1416**	3212
	NEC	µPA2004	
	RIFA	PBD352302	
	Sanyo	LB1234	
	SGS	L204	
		ULN2004	
	Signetics	NE5604	
		ULN2004	3721
	SiliconG	SG2004	
	Sprague	ULN-2004	
		ULS-2004	
	TI	ULN2004A	
	Toshiba	TD62004	
		TD62104	
ULN2064	**IPS**	**IP2064**	3599
	Mitsubishi	M54532	
	SGS	ULN2064	
	Sprague	ULN-2064	
	TI	SN75064	
		ULN2064	
	Toshiba	TD62064	
ULN2065	**IPS**	**IP2065**	3599
	SGS	ULN2065	
	Sprague	ULN-2065	
	TI	SN75065	
		ULN2065	
ULN2066	**IPS**	**IP2066**	3599
	SGS	ULN2066	
	Sprague	ULN-2066	
	TI	SN75066	
		ULN2066	
ULN2067	**IPS**	**IP2067**	3599
	SGS	ULN2067	
	Sprague	ULN-2067	
	TI	SN75067	
		ULN2067	
ULN2068	**IPS**	**IP2068**	3599
	SGS	ULN2068	
	Sprague	ULN-2068	
	TI	SN75068	
		ULN2068	
ULN2069	**IPS**	**IP2069**	3599
	SGS	ULN2069	
	Sprague	ULN-2069	
	TI	SN75069	
		ULN2069	
ULN2074	**IPS**	**IP2074**	3599
	SGS	ULN2074	
	Sprague	ULN-2074	
	TI	SN75074	
		ULN2074	
	Toshiba	TD62074	
ULN2075	**IPS**	**IP2075**	3599
	SGS	ULN2075	
	Sprague	ULN-2075	
	TI	SN75075	
		ULN2075	
ULN2801	RIFA	PBD353811	
	SGS	ULN2801	
	Sprague	ULN-2801	
	Toshiba	TD62081	
ULN2802	RIFA	PBD353814	
	SGS	ULN2802	
	Sprague	ULN-2802	
	Toshiba	TD62082	
ULN2803	RIFA	PBD353813	
	SGS	ULN2803	
	Sprague	ULN-2803	
	Toshiba	TD62083	
ULN2804	RIFA	PBD353812	
	SGS	ULN2804	
	Sprague	ULN-2804	
	Toshiba	TD62084	
◆µA758	Fairchild	µA705	
	Motorola	**MC1309**	3614
		MC1311	

(Continued)

Manufacturer Device	Replacement Source	Device	IC Master Page
◆µA758	National	LM1800	
	RCA	CA3145	
		CA3195	
	Sanyo	LA705	
		LA758	
	Signetics	**µA758**	3727
	Sprague	ULN-3809	
		ULN-3812	
	TI	SN76111	
		SN76116	
µA78S40	Fairchild	µA78S40	

National Semiconductor

Manufacturer Device	Replacement Source	Device	IC Master Page
	AD	AD381	
		AD544	
	Burr-Brown	OPA606	
	LinearTech	LF155	
		LT1022	
		LT1055	
		LT1056	
		OP-15	
	National	LF155	
	PMI	OP-15	
	ThomsonCSF	LF155	
41257	AMD	MCM6257	
	Fujitsu	MB81257	
	Hitachi	HM50257	
545472	AMD	27S29	
		LF157A	
	Fairchild	LF157A	
	Harris	7649	
	MMI	5349-1	
		6349-1	
	National	74S472	
		LF157A	
	PMI	PM157A	
	Raytheon	**29621**	4134
	Signetics	825147	
	TI	28S42	
6116	Fujitsu	MB8416	
	Harris	HM65162	
	IDT	6116	
		IDT6116	
	Mitsubishi	5117	
	Mostek	MK6116	
	NEC	µPD446	
	Nitron	NC6116	
	OKI	**MSM5128**	4732,4733
	RCA	CDM6116	
	S-MOS	SRM2016	
	Toshiba	**TC5517A**	4263
		TC5517B	
6508	Fujitsu	8401	
	GouldAMI	6508	
	Harris	HM6508	
	Intersil	6508	
		IM6508-1	
	MicroPwr	6508	
	National	74C929	
	NEC	443	
	RCA	6508	
	Toshiba	5508	
6516	GouldAMI	6516	
	Harris	HM6516	
6551	GouldAMI	S6551	
	RCA	1822	
	Rockwell	R6551	
	Toshiba	5101	
74C181	Motorola	MC14581	
	RCA	CD40181	
		CD4057	
	SGS	HCC/HCF40181	
	SSS	SCL4581	
74C182	Fairchild	F4582	
	Motorola	MC14582	
	RCA	CD40182	
	SGS	HCC/HCF40182	
	SSS	SCL4582	
74C929	Fujitsu	8401	
	GouldAMI	6508	
	Harris	HM6508	
	Intersil	6508	
		IM6508-1	
	MicroPwr	6508	
	National	6508	
	NEC	443	
	RCA	6508	
	Toshiba	5508	
74S472	AMD	27S29	
		LF157A	

(Continued)

Manufacturer Device	Replacement Source	Device	IC Master Page
74S472	Fairchild	LF157A	
	Harris	7649	
	MMI	5349-1	
		6349-1	
	National	545472	
		LF157A	
	PMI	PM157A	
	Raytheon	**29621**	4134
	Signetics	825147	
	TI	28S42	
77S185	AMD	27S185	
		AM27S185	
	Fujitsu	MB7128	
	Hitachi	HN25085	
	MMI	5389	
		6389	4102
		6389-1	
		63S841	4101,4102
	Motorola	**MCM7685**	4124
	National	87S185	
		DM87S185	
	Raytheon	29651	
		29651A	4134
	Signetics	82S185	
		N82HS185	
		N82S185	4166
	TI	24S81	
		TBP24S81	
77S191	AMD	27S191	
		AM27S191	
	Fairchild	932511	
	Fujitsu	MB7138	
	Harris	76161	
		HM76161	
	Hitachi	HN25169	
	MMI	**63S1681**	4101,4103
	Motorola	MCM76101	
	National	87S191	
		DM87S191	
	Raytheon	**29681**	4134
	Signetics	82S191	
		N82S191	4167
	TI	28S166	
		TBP28S166	
77S321	AMD	27S43	
		AM27S43	
	Fujitsu	MB7142	
	MMI	**53S3281**	691,4101
		63S3281	4101,4103
	National	87S321	
		DM87S321	
	Raytheon	**29671**	4134
	Signetics	82S321	
		N82S321	4167
8250A	Raytheon	RC8250	
87S185	AMD	27S185	
		AM27S185	
	Fujitsu	MB7128	
	Hitachi	HN25085	
	MMI	5389	
		6389	4102
		6389-1	
		63S841	4101,4102
	Motorola	**MCM7685**	4124
	National	77S185	
		DM87S185	
	Raytheon	29651	
		29651A	4134
	Signetics	82S185	
		N82HS185	
		N82S185	4166
	TI	24S81	
		TBP24S81	
87S191	AMD	27S191	
		AM27S191	
	Fairchild	932511	
	Fujitsu	MB7138	
	Harris	76161	
		HM76161	
	Hitachi	HN25169	
	MMI	**63S1681**	4101,4103
	Motorola	MCM76101	
	National	77S191	
		DM87S191	
	Raytheon	**29681**	4134
	Signetics	82S191	
		N82S191	4167
	TI	28S166	
		TBP28S166	

Manufacturer Device	Replacement Source	Device	IC Master Page
87S321	AMD	27S43	
		AM27S43	
	Fujitsu	MB7142	
	MMI	**53S3281**	691,4101
		63S3281	4101,4103
	National	77S321	
		DM87S321	
	Raytheon	**29671**	4134
	Signetics	82S321	
		N82S321	4167
9650	TI	TMS9650	
	Western	WD9650	
AD7520	AD	AD7520	
	Datel	DAC-HA10B	
	Intersil	AD7520	
	MicroPwr	MP7520	
	National	DAC1020	
		DAC1021	
		DAC1022	
AD7521	AD	AD7541	
	Datel	**DAC-7541**	3162
	Harris	HI7541	
	HybridSys	DAC331	
		HS7541	
	Intersil	AD7541	
		ICL7541	
	MicroPwr	MP7541	
		MP7621	
	Siliconix	SI7541	
	TeledyneP	TP7541	
AD7533	AD	AD7533	
	Datel	**DAC-7533**	3162
	Intersil	AD7533	
	MicroPwr	MP7533	
ADC0801	TI	ADC0801	
ADC0802	**Intersil**	**ADC0802**	3199
	TI	ADC0802	
ADC0803	**Datel**	**ADC-830**	3157,3162
	Intersil	**ADC0803**	3199
	TI	ADC0803	
ADC0804	**Intersil**	**ADC0804**	3199
	TI	ADC0804	
ADC0808	Mostek	MK0808	
	TI	**ADC0808**	720
ADC0809	Mostek	MK50809	
	TI	ADC0809	
ADC0811	**Motorola**	**MC145040**	3629
	TI	TLC540	
		TLC541	
ADC0816	Datel	DAS-952	
ADC0817	Mostek	MK50817	
ADC0829	**Motorola**	**MC14442**	3629
	TI	TLC532	
		TLC533	
ADC0830	**Motorola**	**MC14444**	3629
	TI	TLC530	
		TLC531	
AH0126	Intersil	DG126	
	Siliconix	DG126	
AH0129	Intersil	DG129	
	Siliconix	DG129	
AH0133	Intersil	DG133	
	Siliconix	DG133	
AH0134	Intersil	DG134	
	Siliconix	DG134	
AH0139	Intersil	DG139	
	Siliconix	DG139	
AH0140	Intersil	DG140	
	Siliconix	DG140	
AH0141	Intersil	DG141	
	Siliconix	DG141	
AH0142	Intersil	DG142	
	Siliconix	DG142	
AH0143	**Intersil**	**DG143**	3196
	Siliconix	DG143	
AH0144	Intersil	DG144	
	Siliconix	DG144	
AH0145	Intersil	DG145	
	Siliconix	DG145	
AH0146	Intersil	DG146	
	Siliconix	DG146	
AH0151	Intersil	DG151	
AH0152	Intersil	DG152	
AH0153	Intersil	DG153	
AH0154	Intersil	DG154	
	National	AM0154	
AH0161	Intersil	DG161	
AH0162	Intersil	DG162	
AH0163	Intersil	DG163	
	National	AM0163	

◆ Discontinued

The manufacturers report their devices can be used as direct replacements.
Performance details often differ, so compare the specifications considering your requirements.

National Semiconductor (Cont'd)

Manufacturer Device	Replacement Source	Device	IC Master Page
AH0164	Intersil	DG164	
	National	AM0164	
AH5009	Intersil	IH5009	
	National	AM9709	
		AM97C09	
AH5010	Intersil	IH5010	
	National	AM9710	
AH5011	Intersil	IH5011	
	National	AM9711	
AH5012	Intersil	IH5012	
	National	AM9712	
AH5013	Intersil	IH5013	
AH5014	Intersil	IH5014	
AH5015	Intersil	IH5015	
AH5016	Intersil	IH5016	
AM0154	Intersil	DG154	
	National	AH0154	
AM0163	Intersil	DG163	
	National	AH0163	
AM0164	Intersil	DG164	
	National	AH0164	
AM9709	Intersil	IH5009	
	National	AH5009	
		AM97C09	
AM9710	Intersil	IH5010	
	National	AH5010	
AM9711	Intersil	IH5011	
	National	AH5011	
AM9712	Intersil	IH5012	
	National	AH5012	
AM97C09	Intersil	IH5009	
	National	AH5009	
		AM9709	
◆AM97C10	Intersil	IH5010	
	National	AH5010	
		AM9710	
◆AM97C11	Intersil	IH5011	
	National	AH5011	
		AM9711	
◆AM97C12	Intersil	IH5012	
	National	AH5012	
		AM9712	
BLC80/316	Intel	ISBC80/30	
CD4000	Motorola	MC14000	
	RCA	CD4000	
	SGS	HCC/HCF4000	
	Signetics	HEF400	
	Solitron	CM4000	
	SSS	SCL4000	
CD4001	Fairchild	F4001	
	Motorola	MC14001	
	National	MM74C02	
	OKI	MSM4001	
	RCA	CD4001	
	Sanyo	LC4001B	
	SGS	HCC/HCF4001	
	Signetics	HEF4001	
	Solitron	CM4001	
	SSS	SCL4001	
	Toshiba	TC4001	
CD4002	Fairchild	F4002	
	Motorola	MC14002	
	RCA	CD4002	
	SGS	HCC/HCF4002	
	Signetics	HEF4002	
	Solitron	CM4002	
	SSS	SCL4002	
	Toshiba	TC4002	
CD4006	Fairchild	F4006	
	RCA	CD4006	
	SGS	HCC/HCF4006	
	Signetics	HEF4006	
	Solitron	CM4006	
	SSS	SCL4006	
	Toshiba	TC4006	
CD4007	Fairchild	F4007	
	Motorola	MC14007	
	RCA	CD4007	
	SGS	HCC/HCF4007	
	Signetics	HEF4007	
	Solitron	CM4007	
	SSS	SCL4007	
	Toshiba	TC4007	
CD4008	Fairchild	F4008	
	Motorola	MC14008	
	National	MM74C83	
	RCA	CD4008	
	SGS	HCC/HCF4008	
	Signetics	HEF4008	
			(Continued)
CD4008	Solitron	CM4008	
	SSS	SCL4008	
	Toshiba	TC4008	
CD4009	RCA	CD4009	
	SGS	HCC/HCF4009	
	Solitron	CM4009	
	SSS	SCL4009	
	Toshiba	TC4009	
CD4010	RCA	CD4010	
	SGS	HCC/HCF4010	
	Solitron	CM4010	
	SSS	SCL4010	
	Toshiba	TC4010	
CD40106	Fairchild	F40014	
	Motorola	MC14584	
	National	CD4584	
		MM54C14	
		MM74C14	
	RCA	CD40106	
	SGS	HCC/HCF40106	
	Signetics	HEF40106	
	SSS	SCL4584	
CD4011	Fairchild	F4011	
	Motorola	MC14011	
	National	MM74C00	
	OKI	MSM4011	
	RCA	CD4011	
	Sanyo	LC4011	
	SGS	HCC/HCF4011	
	Signetics	HEF4011	
	Solitron	CM4011	
	SSS	SCL4011	
	Toshiba	TC4011	
CD4012	Fairchild	F4012	
	Motorola	MC14012	
	RCA	CD4012	
	SGS	HCC/HCF4012	
	Signetics	HEF4012	
	Solitron	CM4012	
	SSS	SCL4012	
	Toshiba	TC4012	
CD4013	Fairchild	F4013	
	Motorola	MC14013	
	National	MM74C74	
	OKI	MSM4013	
	RCA	CD4013	
	Sanyo	LC4013	
	SGS	HCC/HCF4013	
	Signetics	HEF4013	
	Solitron	CM4013	
	SSS	SCL4013	
	Toshiba	TC4013	
CD4014	Fairchild	F4014	
	Motorola	MC14014	
	RCA	CD4014	
	SGS	HCC/HCF4014	
	Signetics	HEF4014	
	Solitron	CM4014	
	SSS	SCL4014	
	Toshiba	TC4014	
CD4015	Fairchild	F4015	
	Motorola	MC14015	
	National	MM74C164	
	OKI	MSM4015	
	RCA	CD4015	
	Sanyo	LC4015	
	SGS	HCC/HCF4015	
	Signetics	HEF4015	
	Solitron	CM4015	
	SSS	SCL4015	
	Toshiba	TC4015	
CD4016	Fairchild	F4016	
		F4066	
	Motorola	MC14016	
		MC14066	
	National	CD4066	
	RCA	CD4016	
		CD4066	
	Sanyo	LC4016	
		LC4066	
	SGS	HCC/HCF4016	
		HCC/HCF4066	
	Signetics	HEF4016	
		HEF4066	
	Solitron	CM4016	
		CM4066	
		HCF4016	
	SSS	SCL4016	
		SCL4066	
	Toshiba	TC4016	
		TC4066	
CD40160	Fairchild	F40160	
	Motorola	MC14160	
	RCA	CD40160	
	SSS	SCL4160	
CD40161	Fairchild	F40161	
	Motorola	MC14161	
	RCA	CD40161	
	SSS	SCL4161	
CD40162	Fairchild	F40162	
	Motorola	MC14162B	
	RCA	CD40162	
	SSS	SCL4162	
CD40163	Fairchild	F40163	
	Motorola	MC14163B	
	RCA	CD40163	
	SSS	SCL4163	
CD4017	Fairchild	F4017	
	Motorola	MC14017	
	RCA	CD4017	
	SGS	HCC/HCF4017	
	Signetics	HEF4017	
	Solitron	CM4017	
	SSS	SCL4017	
	Toshiba	TC4017	
CD40174B	Fairchild	F40174B	
	Motorola	MC14174B	
	RCA	**CD40174B**	**704,1146**
	SSS	SCL4174B	
CD40175	Fairchild	F40175	
	Motorola	MC14175	
	National	MM54C175	
		MM74C175	
	Signetics	HEF40175	
	Toshiba	TC40175	
CD4018	Fairchild	F4018	
	Motorola	MC14018	
	RCA	CD4018	
	SGS	HCC/HCF4018	
	Signetics	HEF4018	
	Solitron	CM4018	
	SSS	SCL4018	
	Toshiba	TC4018	
CD4019	Fairchild	F4019	
	OKI	MSM4019	
	RCA	CD4019	
	Sanyo	LC4019	
	SGS	HCC/HCF4019	
	Signetics	HEF4019	
	Solitron	CM4019	
	SSS	SCL4019	
	Toshiba	TC4019	
CD40192	Fairchild	F4029	
	Motorola	MC14029	
	National	CD4029	
	RCA	CD40192	
		CD4029	
	SGS	HCC/HCF40192	
		HCC/HCF4029	
	Signetics	HEF40192	
	Solitron	CM4029	
	SSS	SCL4029	
		SCL4192	
	Toshiba	TC40192	
		TC4029	
CD40193	Fairchild	F40193	
	National	MM54C193	
		MM74C193	
	RCA	CD40193	
	SGS	HCC/HCF40193	
	Signetics	HEF40193	
	SSS	SCL4193	
	Toshiba	**TC40193**	**1363**
CD40195	Fairchild	F40195	
	National	MM74C195	
CD4020	Fairchild	F4020	
	Motorola	MC14020	
	RCA	CD4020	
	SGS	HCC/HCF4020	
	Signetics	HEF4020	
	Solitron	CM4020	
	SSS	SCL4020	
	Toshiba	TC4020	
CD4021	Fairchild	F4021	
	Motorola	MC14021	
	RCA	CD4021	
	SGS	HCC/HCF4021	
	Signetics	HEF4021	
	SSS	SCL4021	
	Toshiba	TC4021	
CD4022	Fairchild	F4022	
	Motorola	MC14022	
			(Continued)
CD4022	RCA	CD4022	
	SGS	HCC/HCF4022	
	Signetics	HEF4022	
	Solitron	CM4022	
	SSS	SCL4022	
	Toshiba	TC4022	
CD4023	Fairchild	F4023	
	Motorola	MC14023	
	National	MM74C10	
	RCA	CD4023	
	SGS	HCC/HCF4023	
	Signetics	HEF4023	
	Solitron	CM4023	
	SSS	SCL4023	
	Toshiba	TC4023	
CD4024	Fairchild	F4024	
	Motorola	MC14024	
	RCA	CD4024	
	SGS	HCC/HCF4024	
	Signetics	HEF4024	
	Solitron	CM4024	
	SSS	SCL4024	
	Toshiba	TC4024	
CD4025	Fairchild	F4025	
	Motorola	MC14025	
	RCA	CD4025	
	SGS	HCC/HCF4025	
	Signetics	HEF4025	
	Solitron	CM4025	
	SSS	SCL4025	
	Toshiba	TC4025	
CD4027	Fairchild	F4027	
	Motorola	MC14027	
	National	MM74C76	
	OKI	MSM4027	
	RCA	CD4027	
	Sanyo	LC4027	
	SGS	HCC/HCF4027	
	Signetics	HEF4027	
	Solitron	CM4027	
	SSS	SCL4027	
CD4028	Fairchild	F4028	
	Motorola	MC14028	
	National	MM74C42	
	OKI	MSM4028	
	RCA	CD4028	
	Sanyo	LC4028	
	SGS	HCC/HCF4028	
	Signetics	HEF4028	
	Solitron	CM4028	
	SSS	SCL4028	
	Toshiba	TC4028	
CD4029	Fairchild	F4029	
	Motorola	MC14029	
	National	CD40192	
	RCA	CD40192	
		CD4029	
	SGS	HCC/HCF40192	
		HCC/HCF4029	
	Signetics	HEF40192	
	Solitron	CM4029	
	SSS	SCL4029	
		SCL4192	
	Toshiba	TC40192	
		TC4029	
CD4030	Fairchild	F4030	
	RCA	CD4030	
	SGS	HCC/HCF4030	
	Signetics	HEF4030	
	Solitron	CM4030	
	SSS	SCL4030	
	Toshiba	TC4030	
CD4031	Fairchild	F4031	
	RCA	CD4031	
	SGS	HCC/HCF4031	
	Signetics	HEF4731	
CD4031B	Motorola	MC14557B	
	RCA	**CD4031B**	**704**
CD4034	Fairchild	F4034	
	Motorola	MC14034	
	RCA	CD4034	
	SGS	HCC/HCF4034	
	Solitron	CM4034	
	SSS	SCL4034	
	Toshiba	TC4034	
CD4035B	Motorola	MC14035B	
CD4040	Fairchild	F4040	
	Motorola	MC14040	
	RCA	CD4040	
	SGS	HCC/HCF4040	
	Signetics	HEF4040	
	Solitron	CM4040	
			(Continued)

◆ Discontinued

Bold face device numbers indicate manufacturers data is provided in the IC Master on the pages noted.

National Semiconductor (Cont'd)

Manufacturer Device	Replacement Source	Device	IC Master Page
CD4040	SSS	SCL4040	
	Toshiba	TC4040	
CD4041	Fairchild	F4041	
	RCA	CD4041	
	SGS	HCC/HCF4041	
	Signetics	HEF4041	
	Solitron	CM4041	
	SSS	SCL4041	
CD4042	Fairchild	F4042	
	Motorola	MC14042	
	RCA	CD4042	
	SGS	HCC/HCF4042	
	Signetics	HEF4042	
	Solitron	CM4042	
	SSS	SCL4042	
	Toshiba	TC4042	
CD4043	Motorola	MC14043	
	RCA	CD4043	
	SGS	HCC/HCF4043	
	Signetics	HEF4043	
	Solitron	CM4043	
	SSS	SCL4043	
	Toshiba	TC4043	
CD4044	Fairchild	F4044	
	Motorola	MC14044	
	RCA	CD4044	
	SGS	HCC/HCF4044	
	Signetics	HEF4044	
	Solitron	CM4044	
	Toshiba	TC4044	
CD4046	Fairchild	F4046	
	Motorola	MC14046	
	RCA	CD4046	
	SGS	HCC/HCF4046	
	Solitron	CM4046	
	SSS	SCL4046	
CD4047	Fairchild	F4047	
	RCA	CD4047	
	SGS	HCC/HCF4047	
	Signetics	HEF4047	
	Solitron	CM4047	
	SSS	SCL4047	
	Toshiba	TC4047	
CD4048	RCA	CD4048	
	SGS	HCC/HCF4048	
	Solitron	CM4048	
	SSS	SCL4402	
CD4049	Fairchild	F4049	
	Motorola	MC14049	
	OKI	MSM4049	
	RCA	CD4049	
	Sanyo	LC4049	
	SGS	HCC/HCF4049	
	Signetics	HEF4049	
	Solitron	CM4049	
	SSS	SCL4049	
	Toshiba	TC4049	
CD4050	Fairchild	F4050	
	Motorola	MC14050	
	RCA	CD4050	
	SGS	HCC/HCF4050	
	Signetics	HEF4050	
	Solitron	CM4050	
	SSS	SCL4050	
	Toshiba	TC4050	
CD4051	Fairchild	F4051	
	Motorola	MC14051	
	RCA	CD4051	
	SGS	HCC/HCF4051	
	Signetics	HEF4051	
	Solitron	CM4051	
	SSS	SCL4051	
	Toshiba	TC4051	
CD4052	AD	AD7502	
	Datel	MVD409	
	Harris	HI1828A	
	MicroPwr	MP7502	
	Solitron	CM4052	
	SSS	SCL4052	
	Toshiba	TC4052	
CD4052B	Motorola	MC14052B	
	SSS	SCL4052B	
CD4053	Fairchild	F4053	
	Motorola	MC14053	
	RCA	CD4053	
	SGS	HCC/HCF4053	
	Signetics	HEF4053	
	Solitron	CM4053	
CD4053	SSS	SCL4053	
	Toshiba	**TC4053B**	**1363**
CD4060	Motorola	MC14060	
	RCA	CD4060	
	SGS	HCC/HCF4060	
	Signetics	HEF4060	
	SSS	SCL4060	
CD4066	Fairchild	F4016	
		F4066	
	Motorola	MC14016	
		MC14066	
	National	CD4016	
	RCA	CD4016	
		CD4066	
	Sanyo	LC4016	
		LC4066	
	SGS	HCC/HCF4016	
		HCC/HCF4066	
	Signetics	HEF4016	
		HEF4066	
	Solitron	CM4016	
		CM4066	
		HCF4016	
	SSS	SCL4016	
		SCL4066	
	Toshiba	TC4016	
		TC4066	
CD4069	Fairchild	F4069	
	Motorola	MC14069	
	National	MM54C04	
		MM74C04	
	OKI	MSM4069	
	RCA	CD4069	
	Sanyo	LC4069	
	SGS	HCC/HCF4069	
	Signetics	HEF4069	
	Solitron	CM4069	
	SSS	SCL4069	
		SCL4449	
	Toshiba	TC4069	
CD4070	Fairchild	F4070	
	Motorola	MC14070	
	National	MM74C86	
	RCA	CD4070	
	SGS	HCC/HCF4070	
	Signetics	HEF4070	
	Solitron	CM4070	
	SSS	SCL4070	
CD4071	Fairchild	F4071	
	Motorola	MC14071	
	National	MM74C32	
	OKI	MSM4071	
	RCA	CD4071	
	Sanyo	LC4071	
	SGS	HCC/HCF4071	
	Signetics	HEF4071	
	Solitron	CM4071	
	SSS	SCL4071	
	Toshiba	TC4071	
CD4072	Fairchild	F4072	
	Motorola	MC14072	
	RCA	CD4072	
	SGS	HCC/HCF4072	
	Signetics	HEF4072	
	SSS	SCL4072	
	Toshiba	TC4072	
CD4073	Fairchild	F4073	
	Motorola	MC14073	
	RCA	CD4073	
	SGS	HCC/HCF4073	
	Signetics	HEF4073	
	Solitron	CM4073	
	SSS	SCL4073	
	Toshiba	TC4073	
CD4075	Fairchild	F4075	
	Motorola	MC14075	
	RCA	CD4075	
	SGS	HCC/HCF4075	
	Signetics	HEF4075	
	Solitron	CM4075	
	SSS	SCL4075	
	Toshiba	TC4075	
CD4076	Fairchild	F4076	
	Motorola	MC14076	
	National	MM54C173	
		MM74C173	
	RCA	CD4076	
	SGS	HCC/HCF4076	
	Signetics	HEF4076	
	Solitron	CM4076	
	SSS	SCL4076	
	Toshiba	TC4076	
CD4077	Fairchild	F4077	
	Motorola	MC14077	
	RCA	CD4077	
	SGS	HCC/HCF4077	
	Signetics	HEF4077	
	Solitron	CM4077	
	SSS	SCL4077	
CD4081	Fairchild	F4081	
	Motorola	MC14081	
	National	MM74C08	
	OKI	MSM4081	
	RCA	CD4081	
	Sanyo	LC4081	
	SGS	HCC/HCF4081	
	Signetics	HEF4081	
	Solitron	CM4081	
	SSS	SCL4081	
	Toshiba	TC4081	
CD4082	Fairchild	F4082	
	Motorola	MC14082	
	RCA	CD4082	
	SGS	HCC/HCF4082	
	Signetics	HEF4082	
	SSS	SCL4082	
	Toshiba	TC4082	
CD4085B	Motorola	MC14506B	
	RCA	**CD4085B**	**704,1145**
	SSS	SCL4085B	
CD4089	RCA	CD4089	
	SGS	HCC/HCF4089	
CD4093B	Fairchild	F4093B	
	Motorola	MC14093B	
	RCA	**CD4093B**	**704,1145**
	SSS	SCL4093B	
CD4099B	Motorola	MC14099B	
	RCA	**CD4099B**	**704,1146**
	SSS	SCL4099B	
CD4503	Fairchild	F40097B	
	Motorola	MC14503	
		MC14503B	
	RCA	CD4503	
	SGS	HCC/CFH4503	
CD4510	Fairchild	F4510	
	Motorola	MC14510	
	RCA	CD4510	
	SGS	HCC/HCF4510	
	Signetics	HEF4510	
	Solitron	CM4510	
	SSS	SCL4510	
	Toshiba	TC4510	
CD4511	Fairchild	F4511	
	Mitel	MD4511	
	MMI	4511	
	Motorola	MC14511	
	NEC	μPD4511	
	RCA	CD4511	
	SGS	HCC/HCF4511	
	Signetics	HEF4511	
	Solitron	CM4511	
	SSS	SCL4511	
	Toshiba	TC4511	
CD4512	Fairchild	F4512	
	Motorola	MC14512	
	RCA	CD4512	
	SGS	HCC/HCF4512	
	SSS	SCL4512	
	Toshiba	TC4512	
CD4514	Fairchild	F4514	
	Motorola	MC14514	
	RCA	CD4514	
	SGS	HCC/HCF4514	
	Signetics	HEF4514	
	Solitron	CM4514	
	SSS	SCL4514	
	Toshiba	TC4514	
CD4515	Fairchild	F4515	
	Motorola	MC14515	
	RCA	CD4515	
	SGS	HCC/HCF4515	
	Signetics	HEF4515	
	Solitron	CM4515	
	SSS	SCL4515	
	Toshiba	TC4515	
CD4516	Fairchild	F4516	
	Motorola	MC14516	
	RCA	CD4516	
	SGS	HCC/HCF4516	
	Signetics	HEF4516	
	Solitron	CM4516	
	SSS	SCL4516	
	Toshiba	TC4516	
CD4518	Fairchild	F4518	
	Motorola	MC14518	
	RCA	CD4518	
	SGS	HCC/HCF4518	
	Signetics	HEF4518	
	Solitron	CM4518	
	SSS	SCL4518	
	Toshiba	TC4518	
CD4519	Hitachi	HD4519	
	Motorola	MC14519	
	RCA	CD4519	
	Signetics	HEF4519	
CD4520	Fairchild	F4520	
	Motorola	MC14520	
	OKI	MSM4520	
	RCA	CD4520	
	Sanyo	LC4520	
	SGS	HCC/HCF4520	
	Signetics	HEF4520	
	Solitron	CM4520	
	SSS	SCL4520	
	Toshiba	TC4520	
CD4522	Fairchild	F4522	
	Motorola	MC14522B	
	RCA	CD4522	
	SSS	SCL4522	
CD4526	Fairchild	F4526	
	Motorola	MC14526	
	Signetics	HEF4526	
	SSS	SCL4526	
	Toshiba	TC4526	
CD4527	Fairchild	F4527	
	Motorola	MC14527	
	RCA	CD4527	
	SGS	HCC/HCF4527	
	Signetics	HEF4527	
	SSS	SCL4527	
	Toshiba	TC4527	
CD4528	Fairchild	F4528	
	Motorola	MC14528	
	National	MM74C221	
	RCA	CD4098	
	SGS	HCC/HCF4098	
	Signetics	HEF4528	
	SSS	SCL4528	
	Toshiba	TC4528	
CD4529	Motorola	MC14529	
CD4538	Motorola	MC14538	
	OKI	MSM4538	
	Signetics	HEF4538	
CD4543	Fairchild	F4543	
	Motorola	MC14543	
		MC14543B	
	RCA	CD4543	
	Signetics	HEF4543	
	SSS	SCL4S43B	
	Toshiba	TC4543	
CD4584	Fairchild	F40014	
	Motorola	MC14584	
	National	CD40106	
		MM54C14	
		MM74C14	
	RCA	CD40106	
	SGS	HCC/HCF40106	
	Signetics	HEF40106	
	SSS	SCL4584	
CD4723	Fairchild	F4723	
COP410	ThomsonCSF	ET9410	
COP411	ThomsonCSF	ET9411	
COP420	ThomsonCSF	ET9420	
COP421	ThomsonCSF	ET9421	
COP422	ThomsonCSF	ET9422	
COP444	ThomsonCSF	ET9444	
COP445	ThomsonCSF	ET9445	
COP494	GI	ER59256	
	National	NMC9306	
	NCR	**NCR59306**	**4128**
COP495	GI	ER5911	
	Hyundai	HY93C46	
	National	NMC9346	
	NCR	59346	
		NCR59308	**4128**
	SGS	M9346	
	Sierra	SC22011	
◆DAC0800	AMD	AM1408	
		DAC-08	
		SSS1408	
	AD	AD1408	
		ADDAC-08	
	Datel	DAC-08B	
		DAC-I8BC	
		DAC-IC8B	

(Continued)

◆ Discontinued

The manufacturers report their devices can be used as direct replacements. Performance details often differ, so compare the specifications considering your requirements.

National Semiconductor (Cont'd)

Manufacturer Device	Replacement Source	Device	IC Master Page
◆DAC0800	**Datel**	**DAC-IC8BC**	**3162**
	Fairchild	DAC-08	
		MA0802M	
		µA0801	
		µA0802	
	Hitachi	HA17408	
	Motorola	**DAC-08**	**3630**
		MC1408	
	National	DAC0801	
		DAC0802	
		DAC0806	
		DAC0807	
		DAC0808	
	NEC	µPC624	
	PMI	**DAC-08**	**3637,3639**
		DAC-1408	
	Raytheon	**DAC-08**	**3664**
	Signetics	MC1408	
DAC0801	AMD	AM1408	
		DAC-08	
		SSS1408	
	AD	AD1408	
		ADDAC-08	
	Datel	DAC-08B	
		DAC-I8BC	
		DAC-IC8B	
		DAC-IC8BC	**3162**
	Fairchild	DAC-08	
		MA0802M	
		µA0801	
		µA0802	
	Hitachi	HA17408	
	Motorola	**DAC-08**	**3630**
		MC1408	
	National	DAC0802	
		DAC0806	
		DAC0807	
		DAC0808	
	NEC	µPC624	
	PMI	**DAC-08**	**3637,3639**
		DAC-1408	
	Raytheon	**DAC-08**	**3664**
	Signetics	MC1408	
DAC0802	AMD	AM1408	
		DAC-08	
		SSS1408	
	AD	AD1408	
		ADDAC-08	
	Datel	DAC-08B	
		DAC-I8BC	
		DAC-IC8B	
		DAC-IC8BC	**3162**
	Fairchild	DAC-08	
		MA0802M	
		µA0801	
		µA0802	
	Hitachi	HA17408	
	Motorola	**DAC-08**	**3630**
		MC1408	
	National	DAC0801	
		DAC0806	
		DAC0807	
		DAC0808	
	NEC	µPC624	
	PMI	**DAC-08**	**3637,3639**
		DAC-1408	
	Raytheon	**DAC-08**	**3664**
	Signetics	MC1408	
DAC0806	AMD	AM1408	
		DAC-08	
		SSS1408	
	AD	AD1408	
		ADDAC-08	
	Datel	DAC-08B	
		DAC-I8BC	
		DAC-IC8B	
		DAC-IC8BC	**3162**
	Fairchild	DAC-08	
		MA0802M	
		µA0801	
		µA0802	
	Hitachi	HA17408	
	Motorola	**DAC-08**	**3630**
		MC1408	
	National	DAC0801	
		DAC0802	
		DAC0807	
		DAC0808	
	NEC	µPC624	
			(Continued)
DAC0806	**PMI**	**DAC-08**	**3637,3639**
		DAC-1408	
	Raytheon	**DAC-08**	**3664**
	Signetics	MC1408	
DAC0807	AMD	AM1408	
		DAC-08	
		SSS1408	
	AD	AD1408	
		ADDAC-08	
	Datel	DAC-08B	
		DAC-I8BC	
		DAC-IC8B	
		DAC-IC8BC	**3162**
	Fairchild	DAC-08	
		MA0802M	
		µA0801	
		µA0802	
	Hitachi	HA17408	
	Motorola	**DAC-08**	**3630**
		MC1408	
	National	DAC0801	
		DAC0802	
		DAC0806	
		DAC0808	
	NEC	µPC624	
	PMI	**DAC-08**	**3637,3639**
		DAC-1408	
	Raytheon	**DAC-08**	**3664**
	Signetics	MC1408	
DAC0808	AMD	AM1408	
		DAC-08	
		SSS1408	
	AD	AD1408	
		ADDAC-08	
	Datel	DAC-08B	
		DAC-I8BC	
		DAC-IC8B	
		DAC-IC8BC	**3162**
	Fairchild	DAC-08	
		MA0802M	
		µA0801	
		µA0802	
	Hitachi	HA17408	
	Motorola	**DAC-08**	**3630**
		MC1408	
	National	DAC0801	
		DAC0802	
		DAC0806	
		DAC0807	
	NEC	µPC624	
	PMI	**DAC-08**	**3637,3639**
		DAC-1408	
	Raytheon	**DAC-08**	**3664**
	Signetics	MC1408	
DAC0832	**Datel**	**DAC-608**	**3157,3162**
DAC1006	**Datel**	**DAC-610**	**3157,3162**
DAC1020	AD	AD7520	
	Datel	DAC-HA10B	
	Intersil	AD7520	
	MicroPwr	MP7520	
	National	AD7520	
		DAC1021	
		DAC1022	
DAC1021	AD	AD7520	
	Datel	DAC-HA10B	
	Intersil	AD7520	
	MicroPwr	MP7520	
	National	AD7520	
		DAC1020	
		DAC1022	
DAC1022	AD	AD7520	
	Datel	DAC-HA10B	
	Intersil	AD7520	
	MicroPwr	MP7520	
	National	AD7520	
		DAC1020	
		DAC1021	
DAC1208	**Datel**	**DAC-612**	**3157,3162**
	MicroPwr	MP1208	
DAC1209	MicroPwr	MP1209	
DAC1210	MicroPwr	MP1210	
DAC1220	AD	AD7521	
	Datel	DAC-HA12B	
	HybridSys	DAC331-12	
	Intersil	AD7521	
	MicroPwr	MP7521	
	National	AD7521	
		DAC1221	
		DAC1222	
DAC1221	AD	AD7521	
	Datel	DAC-HA12B	
	HybridSys	DAC331-12	
			(Continued)
DAC1221	Intersil	AD7521	
	MicroPwr	MP7521	
	National	AD7521	
		DAC1220	
		DAC1222	
DAC1222	AD	AD7521	
	Datel	DAC-HA12B	
	HybridSys	DAC331-12	
	Intersil	AD7521	
	MicroPwr	MP7521	
	National	AD7521	
		DAC1220	
		DAC1221	
DAC1230	MicroPwr	MP1230	
DAC1231	MicroPwr	MP1231	
DAC1232	MicroPwr	MP1232	
DAC1265	Fairchild	µA565	
	Harris	HI565A	
	MicroNet	MN565A	
	Motorola	MC3412	
	TeledyneP	TP565A	
DAC1280	AD	ADDAC80	
		ADDAC85	
		DAC80	
	Burr-Brown	DAC80	
		DAC800	
		DAC85	
		DAC850	
	Datel	DAC-85	
		DAC-85C	
		DAC-HZ12B	
	Harris	HI5685	
	HybridSys	DAC9356	
		HSDAC80	
	MicroNet	**DAC80**	**3204**
		DAC85	
	National	DAC1285	
	TeledyneP	TPDAC80	
DAC1285	AD	ADDAC80	
		ADDAC85	
		DAC80	
	Burr-Brown	DAC80	
		DAC800	
		DAC85	
		DAC850	
	Datel	DAC-85	
		DAC-85C	
		DAC-HZ12B	
	Harris	HI5685	
	HybridSys	DAC9356	
		HSDAC80	
	MicroNet	**DAC80**	**3204**
		DAC85	
	National	DAC1280	
	TeledyneP	TPDAC80	
DAC1287	Burr-Brown	DAC85/CCD	
DH0006	Micra	MC0006	
DH0008	Micra	MC0008	
DH3725	Fairchild	FQ3725	
	Motorola	MQ3725	
	Raytheon	SP3725	
DM100422	**Fairchild**	**F100422**	**4014**
	Fujitsu	MB8118	
		MBM100422	
		MBM100422A	
	Hitachi	HM100422	
		HM4816	
	Intel	2118	
	Mostek	MK4516	
	Motorola	MCM4517	
	National	NMC5295	
	NEC	UPB100422	
	Signetics	100422	
		GBX100422	
DM10116	Fairchild	F10116	
	Hitachi	HD10116	
	Motorola	**MC10116**	**1131**
	Signetics	**10116**	**1173,1174**
DM10414	**Motorola**	**MCM10152**	**4123**
DM10415	AMD	AM10415	
	Fairchild	**F10415**	**4014**
	Fujitsu	MBM100470A	
		MBM10415	
	Hitachi	HM2110	
		HM2112	
	Motorola	**MCM10146**	**4123**
	Siemens	GXB10415	
	Signetics	10415	
DM10422	**Fairchild**	**F10422**	**4014**
	Fujitsu	MBM10422A	
	Motorola	**MCM10422**	**4123**
			(Continued)
DM10422	NEC	UPB10422	
	Signetics	10422	
DM10470	AMD	AM10470	
	Fujitsu	MBM10470A	
	Hitachi	HM10470	
		HM2142	
	Motorola	MCM10470	
	NEC	UPB10470	
	Signetics	10470	
DM10474	AMD	AM10474	
	Fairchild	F10474	
	Fujitsu	MBM10474A	
	Hitachi	HM10474	
	Motorola	**MCM10474**	**4123**
	NEC	UPB10474	
	Signetics	10474	
DM5400	**Fairchild**	**5400**	**609,616,622,623**
	Signetics	5400	
	TI	**SN5400**	**712**
DM5401	**TI**	**SN5401**	**712**
DM5402	**Fairchild**	**5402**	**609,616,622,623**
	TI	**SN5402**	**712**
DM5403	**TI**	**SN5403**	**712**
DM5404	**Fairchild**	**5404**	**609,616,622,623**
		9016	
	National	DM9016C	
	TI	**SN5404**	**712**
DM5405	**TI**	**SN5405**	**712**
DM5406	**TI**	**SN5406**	**712**
DM5407	**TI**	**SN5407**	**712**
DM5408	**Fairchild**	**5408**	**609,616,622,623**
	TI	**SN5408**	**712**
DM5409	**Fairchild**	**5409**	**609,616,622,623**
	TI	**SN5409**	**712**
DM5410	**Fairchild**	**5410**	**609,616,622,623**
	TI	**SN5410**	**712**
DM54107	**TI**	**SN54107**	**712**
DM54109	Signetics	54109	
	TI	**SN54109**	**712**
DM54121	**Fairchild**	**54121**	**609,616,622,623**
	Signetics	54121	
	TI	**SN54121**	**712**
DM54123	**Fairchild**	**54123**	**609,616,622,623**
	Signetics	54123	
	TI	**SN54123**	**712**
DM54125	**Fairchild**	**54125**	**616**
	National	DM7093	
	TI	**SN54125**	**712**
DM54126	National	DM7094	
	Signetics	54126	
	TI	**SN54126**	**712**
DM5413	**TI**	**SN5413**	**712**
DM54132	Signetics	54132	
	TI	**SN54132**	**712**
DM5414	**Fairchild**	**5414**	**616**
	Signetics	5414	
	TI	**SN5414**	**712**
DM54141	Signetics	54141	
DM54147	Signetics	54147	
	TI	**SN54147**	**712**
DM54148	National	DM9318	
	Signetics	54148	
	TI	**SN54148**	**712**
DM54150	**Fairchild**	**54150**	**616**
	TI	**SN54150**	**712**
DM54151	Fairchild	54151A	
	Signetics	54151	
	TI	**SN54151A**	**712**
DM54153	**Fairchild**	**54153**	**609,616,622,623**
	Signetics	54153	
	TI	**SN54153**	**712**
DM54155	**TI**	**SN54155**	**712**
DM54156	**TI**	**SN54156**	**712**
DM54157	**Fairchild**	**54157**	**609,616**
	Signetics	54157	
	TI	**SN54157**	**712**
DM5416	**TI**	**SN5416**	**712**
DM54160	Raytheon	RM9310	
	Signetics	54160	
	TI	**SN54160**	**712**
DM54161	**Fairchild**	**54161**	**616**
	Signetics	54161	
	TI	**SN54161**	**712**
DM54162	**TI**	**SN54162**	**712**

◆ Discontinued

Bold face device numbers indicate manufacturers data is provided in the IC Master on the pages noted.

National Semiconductor (Cont'd)

Manufacturer Device	Replacement Source	Device	IC Master Page
DM54163	Signetics	54163	
	TI	**SN54163**	712
DM54164	**Fairchild**	**54164**	616
	National	DM7570	
	Signetics	54164	
	TI	**SN54164**	712
DM54165	**Fairchild**	**54165**	617
	National	DM7590	
	Signetics	54165	
	TI	**SN54165**	712
DM54166	Signetics	54166	
	TI	**SN54166**	712
DM5417	**TI**	**SN5417**	712
DM54170	**Fairchild**	**54170**	617
	TI	**SN54170**	712
DM54173	**Fairchild**	**54173**	617
	National	DM7551	
	Raytheon	RM8T10	
	TI	**SN54173**	712
DM54174	**Fairchild**	**54174**	609,617,622,623
	Signetics	54174	
	TI	**SN54174**	712
DM54175	**Fairchild**	**54175**	609,617,622,623
	Signetics	54175	
	TI	**SN54175**	712
DM54176	Raytheon	RM8280	
	Signetics	54176	
		S8280	
	TI	**SN54176**	712
DM54177	National	DM7281	
	Raytheon	RM8281	
	Signetics	54177	
		S7281	
		S8281	
	TI	**SN54177**	712
DM54180	Signetics	54180	
	TI	**SN54180**	712
DM54181	Raytheon	RM9341	
	Signetics	54181	
	TI	**SN54181**	712
DM54182	Raytheon	RM9342	
	TI	**SN54182**	712
DM54184	**TI**	**SN54184**	712
DM54185A	**TI**	**SN54185A**	712
DM54190	Signetics	54190	
	TI	**SN54190**	712
DM54191	**Fairchild**	**54191**	617
	Signetics	54191	
	TI	**SN54191**	712
DM54192	National	DM7560	
	TI	**SN54192**	712
DM54193	National	DM7563	
	TI	**SN54193**	712
DM54194	Signetics	54194	
DM54195	Fairchild	9300	
	TI	**SN54195**	712
DM54196	Signetics	54196	
	TI	**SN54196**	712
DM54198	**TI**	**SN54198**	712
DM54199	**TI**	**SN54199**	712
DM5420	**Fairchild**	**5420**	609,616,622,623
	Signetics	5420	
	TI	**SN5420**	712
DM5423	**TI**	**SN5423**	712
DM5425	**Fairchild**	**5425**	616
	TI	**SN5425**	712
DM54251	National	DM7121	
	TI	**SN54251**	712
DM5426	Signetics	5426	
	TI	**SN5426**	712
DM5427	TI	SN5427	
DM5430	**Fairchild**	**5430**	609,616,622,623
	TI	**SN5430**	712
DM5432	**Fairchild**	**5432**	616
	Signetics	5432	
	TI	**SN5432**	712
DM5437	**Fairchild**	**5437**	609,616,622,623
	TI	**SN5437**	712
DM5438	**TI**	**SN5438**	712
DM5440	**Fairchild**	**5440**	609,616,622,623
	TI	**SN5440**	712
DM5442	Fairchild	5442A	
	Signetics	5442	
	TI	**SN5442A**	712
DM5445	**TI**	**SN5445**	712
DM5450	**TI**	**SN5450**	712
DM5451	**Fairchild**	**5451**	616
	TI	**SN5451**	712
DM5453	**TI**	**SN5453**	712
DM5454	**TI**	**SN5454**	712
DM5470	**TI**	**SN5470**	712
DM5472	**TI**	**SN5472**	712
DM5473	**Fairchild**	**5473**	616
	Signetics	5473	
	TI	**SN5473**	712
DM5474	**Fairchild**	**5474**	609,616,622,623
	Signetics	5474	
	TI	**SN5474**	712
DM5475	**Fairchild**	**5475**	616
	Signetics	5475	
	TI	**SN5475**	712
DM5476	**Fairchild**	**5476**	616
	Signetics	5476	
	TI	**SN5476**	712
DM5485	**Fairchild**	**5485**	616
	Signetics	5485	
	TI	**SN5485**	712
DM5486	**Fairchild**	**5486**	609,616,622,623
	Signetics	5486	
	TI	**SN5486**	712
DM5488	Signetics	S8224	
DM5489	AMD	SN5489-1	
		SN54S289	
	National	DM54S289	
		MM54S289	
	Signetics	54S289	
		54S301	
		S8225	
		S82S25	
DM5496	Signetics	5496	
	TI	**SN5496**	712
DM54ALS00	Motorola	SN54ALS00	
	TI	SN54ALS00A	
DM54ALS01	**TI**	**SN54ALS01**	712
DM54ALS02	Motorola	SN54ALS02	
	TI	**SN54ALS02**	712
DM54ALS03	**TI**	**SN54ALS03B**	712
DM54ALS04	Motorola	SN54ALS04	
	TI	**SN54ALS04A**	712
DM54ALS05	**TI**	**SN54ALS05A**	712
DM54ALS08	Motorola	SN54ALS08	
	TI	**SN54ALS08**	712
DM54ALS09	Motorola	SN54ALS09	
	TI	**SN54ALS09**	712
DM54ALS10	**TI**	**SN54ALS10A**	712
DM54ALS1010	TI	SN54ALS1010	
DM54ALS1034	**TI**	**SN54ALS1034**	713
DM54ALS109	**TI**	**SN54ALS109A**	713
DM54ALS11	**TI**	**SN54ALS11A**	712
DM54ALS112	**TI**	**SN54ALS112A**	713
DM54ALS113	TI	SN54ALS113A	
DM54ALS114	**TI**	**SN54ALS114A**	713
DM54ALS12	TI	SN54ALS12	
DM54ALS1242	National	DM54ALS1243	
DM54ALS1243	National	DM54ALS1242	
DM54ALS1244	**TI**	**SN54ALS1244A**	713
DM54ALS133	**TI**	**SN54ALS133**	713
DM54ALS137	**TI**	**SN54ALS137**	713
DM54ALS138	**TI**	**SN54ALS138**	713
DM54ALS15	TI	SN54ALS15	
DM54ALS151	**TI**	**SN54ALS151**	713
DM54ALS153	**TI**	**SN54ALS153**	713
DM54ALS157	**TI**	**SN54ALS157**	713
DM54ALS158	**TI**	**SN54ALS158**	713
DM54ALS160	Motorola	SN54ALS160	
DM54ALS161	Motorola	SN54ALS161	
	TI	SN54ALS161B	
DM54ALS162	Motorola	SN54ALS162	
	TI	**SN54ALS162A**	713
DM54ALS163	Motorola	SN54ALS163	
	TI	**SN54ALS163A**	713
DM54ALS169	**TI**	**SN54ALS169B**	713
DM54ALS174	**TI**	**SN54ALS174**	713
DM54ALS175	**TI**	**SN54ALS175**	713
DM54ALS20	**TI**	**SN54ALS20A**	713
DM54ALS21	**TI**	**SN54ALS21**	713
DM54ALS22	**TI**	**SN54ALS22B**	713
DM54ALS240	Motorola	SN54ALS240	
	TI	SN54ALS240A	
DM54ALS241	Motorola	SN54ALS241	
	TI	SNALS241A	
DM54ALS242	Motorola	SN54ALS242	
	TI	SN54ALS242A	
DM54ALS243	Motorola	SN54ALS243	
	TI	SN54ALS243A	
DM54ALS244	Motorola	SN54ALS244	
	TI	SN54ALS244A	
DM54ALS245	Motorola	SN54ALS245	
	TI	SN54ALS245A	
DM54ALS251	**TI**	**SN54ALS251**	713
DM54ALS253	**TI**	**SN54ALS253**	713
DM54ALS257	**TI**	**SN54ALS257**	713
DM54ALS258	**TI**	**SN54ALS258**	713
DM54ALS27	**TI**	**SN54ALS27**	713
DM54ALS273	Motorola	SN54ALS273	
	TI	**SN54ALS273**	713
DM54ALS28	**TI**	**SN54ALS28A**	713
DM54ALS32	Motorola	SN54ALS32	
	TI	**SN54ALS32**	713
DM54ALS33	**TI**	**SN54ALS33A**	713
DM54ALS352	**TI**	**SN54ALS352**	713
DM54ALS37	**TI**	**SN54ALS37A**	713
DM54ALS373	Motorola	SN54ALS373	
	TI	SN54ALS373	
DM54ALS374	Motorola	SN54ALS374	
	TI	**SN54ALS374**	713
DM54ALS377	Motorola	SN54ALS377	
DM54ALS38	**TI**	**SN54ALS38A**	713
DM54ALS520	**TI**	**SN54ALS520**	713
DM54ALS533	**TI**	**SN54ALS533**	713
DM54ALS534	**TI**	**SN54ALS534**	713
DM54ALS563	**TI**	**SN54ALS563**	713
DM54ALS564	**TI**	**SN54ALS564**	713
DM54ALS573	Motorola	SN54ALS573	
	TI	**SN54ALS573**	713
DM54ALS574	Motorola	SN54ALS574	
	TI	**SN54ALS574**	713
DM54ALS576	Motorola	SN54ALS576	
	TI	**SN54ALS576**	713
DM54ALS580	Motorola	SN54ALS580	
	TI	**SN54ALS580**	713
DM54ALS620	Motorola	SN54ALS620	
	TI	**SN54ALS620A**	713
DM54ALS621	Motorola	SN54ALS621	
DM54ALS622	Motorola	SN54ALS622	
DM54ALS623	Motorola	SN54ALS623	
	TI	**SN54ALS623A**	713
DM54ALS640	Motorola	SN54ALS640	
	TI	**SN54ALS640A**	713
DM54ALS641	Motorola	SN54ALS641	
DM54ALS642	Motorola	SN54ALS642	
DM54ALS643	Motorola	SN54ALS643	
DM54ALS644	Motorola	SN54ALS644	
DM54ALS645	TI	SN54ALS645A	
DM54ALS646	Motorola	SN54ALS646	
DM54ALS647	Motorola	SN54ALS647	
DM54ALS648	Motorola	SN54ALS648	
DM54ALS649	Motorola	SN54ALS649	
DM54ALS690	Motorola	SN54ALS690	
DM54ALS691	Motorola	SN54ALS691	
DM54ALS692	Motorola	SN54ALS692	
DM54ALS693	Motorola	SN54ALS693	
DM54ALS696	Motorola	SN54ALS696	
DM54ALS697	Motorola	SN54ALS697	
DM54ALS698	Motorola	SN54ALS698	
DM54ALS699	Motorola	SN54ALS699	
DM54ALS74	Motorola	SN54ALS74	
	TI	**SN54ALS74A**	713
DM54ALS804	**TI**	**SN54ALS804**	713
DM54ALS805	**TI**	**SN54ALS805**	713
DM54ALS808	**TI**	**SN54ALS808**	713
DM54ALS832	**TI**	**SN54ALS832**	713
DM54ALS873	Motorola	SN54ALS873	
	TI	**SN54ALS873**	713
DM54ALS874	Motorola	SN54ALS874	
	TI	**SN54ALS874**	713
DM54ALS876	Motorola	SN54ALS876	
	TI	**SN54ALS876**	713
DM54ALS880	Motorola	SN54ALS880	
DM54AS00	**TI**	**SN54AS00**	713
DM54AS02	**TI**	**SN54AS02**	713
DM54AS08	**TI**	**SN54AS08**	713
DM54AS10	**TI**	**SN54AS10**	713
DM54AS109	**TI**	**SN54AS109**	713
DM54AS11	**TI**	**SN54AS11**	713
DM54AS157	**TI**	**SN54AS157**	713
DM54AS158	**TI**	**SN54AS158**	713
DM54AS161	**TI**	**SN54AS161**	713
DM54AS163	**TI**	**SN54AS163**	713
DM54AS169	**TI**	**SN54AS169**	713
DM54AS174	**TI**	**SN54AS174**	713
DM54AS181	**TI**	**SN54AS181A**	713
DM54AS20	**TI**	**SN54AS20**	713
DM54AS21	**TI**	**SN54AS21**	713
DM54AS230	**TI**	**SN54AS230**	713
DM54AS231	**TI**	**SN54AS231**	713
DM54AS240	**TI**	**SN54AS240**	713
DM54AS241	**TI**	**SN54AS241**	713
DM54AS242	**TI**	**SN54AS242**	713
DM54AS244	**TI**	**SN54AS244**	713
DM54AS257	**TI**	**SN54AS257**	713
DM54AS27	**TI**	**SN54AS27**	713
DM54AS30	**TI**	**SN54AS30**	713
DM54AS34	TI	SN54AS34	
DM54AS352	TI	SN54AS352	
DM54AS373	**TI**	**SN54AS373**	713
DM54AS374	**TI**	**SN54AS374**	713
DM54AS640	**TI**	**SN54AS640**	713
DM54AS645	**TI**	**SN54AS645**	713
DM54AS646	**TI**	**SN54AS646**	713
DM54H08	Fairchild	54H08	
DM54L164	National	DM76L70	
DM54L192	National	DM75L60	
DM54L193	National	DM75L63	
DM54LS00	**Fairchild**	**54LS00**	607,612,621,623
	Motorola	**SN54LS00**	1122
	SGS	T54LS00	
	Signetics	54LS00	
	TI	**SN54LS00**	715
DM54LS01	**Motorola**	**SN54LS01**	1122
	TI	**SN54LS01**	715
DM54LS02	**Fairchild**	**54LS02**	607,612,621,623
	Motorola	**SN54LS02**	1122
	SGS	T54LS02	
	Signetics	54LS02	
	TI	**SN54LS02**	715
DM54LS03	**Fairchild**	**54LS03**	607,612,621,623
	Motorola	**SN54LS03**	1122
	SGS	T54LS03	
	TI	**SN54LS03**	715
DM54LS04	**Fairchild**	**54LS04**	607,612,621,623
	Motorola	**SN54LS04**	1124
	SGS	T54LS04	
	Signetics	54LS04	
	TI	**SN54LS04**	715
DM54LS05	**Fairchild**	**54LS05**	607,612,621,623
	Motorola	**SN54LS05**	1124
	SGS	T54LS05	
	TI	**SN54LS05**	715
DM54LS08	**Fairchild**	**54LS08**	607,612,621,623
	Motorola	**SN54LS08**	1122
	SGS	T54LS08	
	Signetics	54LS08	
	TI	**SN54LS08**	715
DM54LS09	**Fairchild**	**54LS09**	612
	Motorola	**SN54LS09**	1122
	SGS	T54LS09	
	TI	**SN54LS09**	715
DM54LS10	**Fairchild**	**54LS10**	607,612,621,623
	Motorola	**SN54LS10**	1122
	SGS	T54LS10	
	Signetics	54LS10	
	TI	**SN54LS10**	715
DM54LS11	**Fairchild**	**54LS11**	607,612,621,623
	Motorola	**SN54LS11**	1122
	SGS	T54LS11	
	TI	**SN54LS11**	715
DM54LS12	**Motorola**	**SN54LS12**	1122
	TI	**SN54LS12**	715
DM54LS122	**Motorola**	**SN54LS122**	1131
	TI	**SN54LS122**	715
DM54LS123	**Motorola**	**SN54LS123**	1131
	TI	**SN54LS123**	715
DM54LS125	**Fairchild**	**54LS125A**	612
	Motorola	SN54LS125	
		SN54LS125A	1124
	SGS	T54LS125	
	Signetics	54LS125A	
	TI	**SN54LS125A**	715
DM54LS13	**Fairchild**	**54LS13**	612
	Motorola	**SN54LS13**	1125
	SGS	T54LS13	
	TI	**SN54LS13**	715
DM54LS132	**Motorola**	**SN54LS132**	1125
	SGS	T54LS132	
	Signetics	54LS132	
	TI	**SN54LS132**	715

◆ Discontinued

The manufacturers report their devices can be used as direct replacements.
Performance details often differ, so compare the specifications considering your requirements.

National Semiconductor (Cont'd)

Manufacturer Device	Replacement Source	Device	IC Master Page
DM54LS136	**Fairchild**	**54LS136**	612
	Motorola	**SN54LS136**	1123
	SGS	T54LS136	
	Signetics	54LS136	
	TI	**SN54LS136**	715
DM54LS138	**Fairchild**	**54LS138**	608,612,621,623
	Motorola	**SN54LS138**	1130
	SGS	T54LS138	
	Signetics	54LS138	
	TI	**SN54LS138**	715
DM54LS139	**Fairchild**	**54LS139**	608,613,621,623
	Motorola	**SN54LS139**	1130
	SGS	T54LS139	
	Signetics	54LS139	
	TI	**SN54LS139A**	715
DM54LS14	**Fairchild**	**54LS14**	612
	Motorola	**SN54LS14**	1125
	SGS	T54LS14	
	Signetics	54LS14	
	TI	**SN54LS14**	715
DM54LS15	**Fairchild**	**54LS15**	612
	Motorola	**SN54LS15**	1122
	SGS	T54LS15	
	TI	**SN54LS15**	715
DM54LS151	**Fairchild**	**54LS151**	608,613,621,623
	Motorola	**SN54LS151**	1129
	SGS	T54LS151	
	Signetics	54LS151	
	TI	**SN54LS151**	715
DM54LS153	**Fairchild**	**54LS153**	608,613,621,623
	Motorola	**SN54LS153**	1129
	SGS	T54LS153	
	Signetics	54LS153	
	TI	**SN54LS153**	715
DM54LS154	Signetics	54LS154	
DM54LS155	**Fairchild**	**54LS155**	613
	Motorola	**SN54LS155**	1130
	SGS	T54LS155	
	TI	**SN54LS155A**	715
DM54LS156	**Fairchild**	**54LS156**	613
	Motorola	**SN54LS156**	1130
	SGS	T54LS156	
	TI	**SN54LS156**	715
DM54LS157	**Fairchild**	**54LS157**	608,613,621,623
	Motorola	**SN54LS157**	1129
	SGS	T54LS157	
	Signetics	54LS157	
	TI	**SN54LS157**	715
DM54LS158	**Fairchild**	**54LS158**	608,613,621,623
	Motorola	**SN54LS158**	1129
	SGS	T54LS158	
	Signetics	54LS158	
	TI	**SN54LS158**	715
DM54LS161A	Fairchild	54LS161A	
	Motorola	**SN54LS161A**	1127
	SGS	T54LS161	
	Signetics	54LS161A	
	TI	**SN54LS161A**	715
DM54LS162A	**Fairchild**	**54LS162A**	613
	Motorola	**SN54LS162A**	1127
	SGS	T54LS162	
	Signetics	54LS162A	
	TI	**SN54LS162A**	715
DM54LS163	**Fairchild**	**54LS163A**	613
	Motorola	**SN54LS163A**	1127
	National	DM54LS163A	
	SGS	T54LS163	
	Signetics	54LS163A	
	TI	**SN54LS163A**	715
DM54LS163A	**Fairchild**	**54LS163A**	613
	Motorola	**SN54LS163A**	1127
	National	DM54LS163	
	SGS	T54LS163	
	Signetics	54LS163A	
	TI	**SN54LS163A**	715
DM54LS164	**Fairchild**	**54LS164**	613
	Motorola	**SN54LS164**	1128
	SGS	T54LS164	
	Signetics	54LS164	
	TI	**SN54LS164**	715
DM54LS168	**Fairchild**	**54LS168**	613
	Motorola	**SN54LS168**	1127
	SGS	T54LS168	
DM54LS169	**Fairchild**	**54LS169**	613
	Motorola	**SN54LS169**	1127
	SGS	T54LS169	
	TI	SN54LS169B	
DM54LS170	**Fairchild**	**54LS170**	613
	SGS	T54LS170	
	TI	SN54LS170	
DM54LS173	Fairchild	54LS173	
	Motorola	**SN54LS173A**	1126
	Signetics	54LS173	
	TI	SN54LS173A	
DM54LS174	**Fairchild**	**54LS174**	608,613,621,623
	Motorola	**SN54LS174**	1126
	SGS	T54LS174	
	Signetics	54LS174	
	TI	SN54LS174	
DM54LS175	**Fairchild**	**54LS175**	608,613,621,623
	Motorola	**SN54LS175**	1126
	SGS	T54LS175	
	Signetics	54LS175	
	TI	SN54LS175	
DM54LS190	**Motorola**	**SN54LS190**	1127
	SGS	T54LS190	
	Signetics	54LS190	
	TI	SN54LS190	
DM54LS191	**Motorola**	**SN54LS191**	1127
	SGS	T54LS191	
	Signetics	54LS191	
	TI	SN54LS191	
DM54LS192	**Fairchild**	**54LS192**	613
	Motorola	**SN54LS192**	1127
	Raytheon	54LS192	
	SGS	T54LS192	
	Signetics	54LS192	
	TI	SN54LS192	
DM54LS193	**Fairchild**	**54LS193**	608,613,621,623
	Motorola	**SN54LS193**	1127
	SGS	T54LS193	
	Signetics	54LS193	
	TI	SN54LS193	
DM54LS196	**Motorola**	**SN54LS196**	1127
	SGS	T54LS196	
	TI	SN54LS196	
DM54LS197	**Motorola**	**SN54LS197**	1127
	SGS	T54LS197	
	Signetics	54LS197	
	TI	SN54LS197	
DM54LS20	**Fairchild**	**54LS20**	608,612,621,623
	Motorola	**SN54LS20**	1122
	SGS	T54LS20	
	Signetics	54LS20	
	TI	**SN54LS20**	715
DM54LS21	**Fairchild**	**54LS21**	608,612,621,623
	Motorola	**SN54LS21**	1122
	SGS	T54LS21	
	TI	**SN54LS21**	715
DM54LS22	**Fairchild**	**54LS22**	608,612,621,623
	Motorola	**SN54LS22**	1122
	SGS	T54LS22	
	TI	**SN54LS22**	715
DM54LS221	**Motorola**	**SN54LS221**	1131
	Signetics	54LS221	
	TI	SN54LS221	
DM54LS245	**Fairchild**	**54LS245**	613
	MMI	SN54LS245	
	Motorola	**SN54LS245**	1124
	Signetics	54LS245	
	TI	SN54LS245	
DM54LS247	**Fairchild**	**54LS247**	613
	Motorola	**SN54LS247**	1130
	TI	SN54LS247	
DM54LS248	**Fairchild**	**54LS248**	613
	Motorola	**SN54LS248**	1130
	Signetics	54LS248	
	TI	SN54LS248	
DM54LS249	**Fairchild**	**54LS249**	613
	Motorola	**SN54LS249**	1130
	TI	SN54LS249	
DM54LS253	**Fairchild**	**54LS253**	608,613,621,623
	Motorola	**SN54LS253**	1129
	National	DM7214	
	SGS	T54LS253	
	Signetics	54LS253	
	TI	SN54LS253	
DM54LS257	**Fairchild**	**54LS257A**	608,614,621,623
	SGS	T54LS257	
DM54LS26	**Fairchild**	**54LS26**	612
	Motorola	**SN54LS26**	1122
	SGS	T54LS26	
	TI	**SN54LS26**	715
DM54LS266	**Fairchild**	**54LS266**	608,614,622,623
	Motorola	**SN54LS266**	1123
	SGS	T54LS266	
	Signetics	54LS266	
	TI	**SN54LS266**	715
DM54LS27	**Fairchild**	**54LS27**	608,612,621,623
	Motorola	**SN54LS27**	1122
	SGS	T54LS27	
	TI	**SN54LS27**	715
DM54LS279	**Fairchild**	**54LS279**	608,614,622,623
	Motorola	**SN54LS279**	1126
	SGS	T54LS279	
	Signetics	54LS279	
	TI	SN54LS279	
DM54LS283	**Fairchild**	**54LS283**	608,614,622,623
	Motorola	**SN54LS283**	1132
	SGS	T54LS283	
	Signetics	54LS283	
	TI	**SN54LS283**	715
DM54LS290	**Motorola**	**SN54LS290**	1127
	SGS	T54LS290	
	Signetics	54LS290	
	TI	**SN54LS290**	715
DM54LS293	**Motorola**	**SN54LS293**	1127
	SGS	T54LS293	
	Signetics	54LS293	
	TI	**SN54LS293**	715
DM54LS30	**Fairchild**	**54LS30**	608,612,621,623
	Motorola	**SN54LS30**	1122
	SGS	T54LS30	
	Signetics	54LS30	
	TI	**SN54LS30**	715
DM54LS32	**Fairchild**	**54LS32**	608,612,621,623
	Motorola	**SN54LS32**	1122
	SGS	T54LS32	
	Signetics	54LS32	
	TI	**SN54LS32**	715
DM54LS352	**Fairchild**	**54LS352**	614
	Motorola	**SN54LS352**	1129
	SGS	T54LS352	
	TI	**SN54LS352**	715
DM54LS353	**Fairchild**	**54LS353**	614
	Motorola	**SN54LS353**	1129
	SGS	T54LS353 T54LS354	
	TI	**SN54LS353**	715
DM54LS366	Fairchild	54LS366A	
	Motorola	SN54LS366A	
	SGS	T54LS366	
	Signetics	54LS366A	
	TI	SN54LS366A	
DM54LS367	Fairchild	54LS367A	
	Motorola	**SN54LS367A**	1124
	SGS	T54LS367	
	Signetics	54LS367 54LS367A	
	TI	SN54LS367A	
DM54LS368	Fairchild	54LS368A	
	Motorola	**SN54LS368A**	1124
	SGS	T54LS368	
	Signetics	54LS368 54LS368A	
	TI	SN54LS368A	
DM54LS37	**Fairchild**	**54LS37**	612
	Motorola	**SN54LS37**	1122
	SGS	T54LS37	
	Signetics	54LS37	
	TI	**SN54LS37**	715
DM54LS374	**Fairchild**	**54LS374**	614
	MMI	SN54LS374	
	Motorola	**SN54LS374**	1126
	SGS	T54LS374	
	TI	**SN54LS374**	715
DM54LS38	**Fairchild**	**54LS38**	612
	Motorola	**SN54LS38**	1122
	SGS	T54LS38	
	TI	**SN54LS38**	715
DM54LS386	**Motorola**	**SN54LS386**	1123
	Raytheon	RM8241	
			(Continued)
DM54LS386	Signetics	S82S41	
	TI	SN54LS386	
DM54LS40	**Fairchild**	**54LS40**	612
	Motorola	**SN54LS40**	1122
	SGS	T54LS40	
	TI	**SN54LS40**	715
DM54LS42	**Fairchild**	**54LS42**	608,612,621,623
	Motorola	**SN54LS42**	1130
	SGS	T54LS42	
	Signetics	54LS42	
	TI	**SN54LS42**	715
DM54LS47	**Fairchild**	**54LS47**	612
	Motorola	**SN54LS47**	1130
	TI	**SN54LS47**	715
DM54LS48	**Fairchild**	**54LS48**	612
	Motorola	**SN54LS48**	1130,1131
	TI	**SN54LS48**	715
DM54LS49	**Fairchild**	**54LS49**	612
	Motorola	**SN54LS49**	1130
	TI	**SN54LS49**	715
DM54LS51	**Fairchild**	**54LS51**	608,612,621,623
	Motorola	**SN54LS51**	1123
	SGS	T54LS51	
	Signetics	54LS51	
	TI	**SN54LS51**	715
DM54LS54	**Fairchild**	**54LS54**	608,612,621,623
	Motorola	**SN54LS54**	1123
	SGS	T54LS54	
	TI	**SN54LS54**	715
DM54LS55	**Fairchild**	**54LS55**	612
	Motorola	**SN54LS55**	1123
	SGS	T54LS55	
DM54LS670	**Fairchild**	**54LS670**	614
	Motorola	**SN54LS670**	1128
	SGS	T54LS670	
	Signetics	54LS670	
	TI	**SN54LS670**	716
DM54LS73	**Motorola**	**SN54LS73A**	1126
	National	DM54LS73A	
	Signetics	54LS73	
	TI	**SN54LS73A**	715
DM54LS73A	**Motorola**	**SN54LS73A**	1126
	National	DM54LS73	
	Signetics	54LS73	
	TI	**SN54LS73A**	715
DM54LS74	**Fairchild**	**54LS74**	608,612,621,623
	Motorola	**SN54LS74A**	1126
	National	DM54LS74A	
	SGS	T54LS74	
	Signetics	54LS74	
	TI	**SN54LS74A**	715
DM54LS74A	**Fairchild**	**54LS74**	608,612,621,623
	Motorola	**SN54LS74A**	1126
	National	DM54LS74	
	SGS	T54LS74	
	Signetics	54LS74	
	TI	**SN54LS74A**	715
DM54LS75	**Motorola**	**SN54LS75**	1126
	Signetics	54LS75	
	TI	**SN54LS75**	715
DM54LS76	**Motorola**	**SN54LS76A**	1126
	Signetics	54LS76	
	TI	**SN54LS76A**	715
DM54LS77	**Motorola**	**SN54LS77**	1126
DM54LS78	**Motorola**	**SN54LS78A**	1126
	TI	**SN54LS78A**	715
DM54LS83A	**Fairchild**	**54LS83A**	608,612,621,623
	Motorola	**SN54LS83A**	1132
	SGS	T54LS83	
	Signetics	54LS83 54LS83A	
	TI	**SN54LS83A**	715
DM54LS85	**Fairchild**	**54LS85**	608,612,621,623
	Motorola	**SN54LS85**	1131
	Signetics	54LS85	
	TI	**SN54LS85**	715
DM54LS86	**Motorola**	**SN54LS86**	1123
	SGS	T54LS86	
	Signetics	54LS86	
	TI	**SN54LS86A**	715
DM54LS90	**Motorola**	**SN54LS90**	1127
	SGS	T54LS90	
	Signetics	54LS90	
	TI	**SN54LS90**	715

◆ Discontinued

Bold face device numbers indicate manufacturers data is provided in the IC Master on the pages noted.

National Semiconductor (Cont'd)

Manufacturer Device	Replacement Source	Device	IC Master Page
DM54LS92	**Motorola**	**SN54LS92**	**1127**
	SGS	T54LS92	
	Signetics	54LS92	
	TI	**SN54LS92**	**715**
DM54LS93	**Motorola**	**SN54LS93**	**1127**
	SGS	T54LS93	
	Signetics	54LS93	
	TI	**SN54LS93**	**715**
DM54LS95B	**Fairchild**	**54LS95B**	**608,612,621,623**
	Motorola	**SN54LS95B**	**1128**
	SGS	T54LS95	
	Signetics	54LS95B	
	TI	SN54LS95B	
DM54S140	Signetics	54S140	
	TI	**SN54S140**	**716**
DM54S188	AMD	AM27LS18	
	MMI	5330-1	
		53LS080	
		63LS080	
	National	DM7577	
	Signetics	S82S23	
DM54S189	AMD	SN54S189	
	Signetics	54S189	
DM54S200	Signetics	54S200	
		54S201	
		S82S116	
		S82S16	
DM54S22	**TI**	**SN54S22**	**716**
DM54S287	MMI	5301-1	
		53S141	**4101**
	Signetics	S82S129	
DM54S288	National	DM7578	
	TI	**TBP18S030M**	**729**
DM54S289	AMD	SN5489-1	
		SN54S289	
	National	DM5489	
		MM54S289	
	Signetics	54S289	
		54S301	
		S8225	
		S82S25	
DM54S387	MMI	5300-1	
		53S140	**4101**
	Signetics	S82S126	
	TI	TBP24SA10M	
DM54S470	MMI	5308	
DM54S471	MMI	5309	
DM54S472	AMD	AM27S29	
	Fujitsu	MB7124	
	MMI	6349-2	
	National	DM74S472	
	Raytheon	**29623**	**4134**
	Signetics	N82S147	
DM54S473	MMI	5348-1	
	Signetics	S82S146	
DM54S474	MMI	5341-1	
	Signetics	S82S141	
	TI	TBP28S46M	
DM54S475	MMI	5340-1	
	National	DM77S295	
		DM87S295	
	Signetics	S82S140	
DM54S570	MMI	5305-1	
		53S240	**4101**
	Signetics	S82S130	
DM54S571	MMI	5306-1	
		53S241	**4101**
	Signetics	S82S131	
DM54S572	AMD	AM27S32	
	Fairchild	93452	
	Fujitsu	MB7121	
	Hitachi	HN25044	
	MMI	5352-1	
		6352	**4102**
	Signetics	S82S136	
	TI	TBP24SA41M	
DM54S573	AMD	AM27S33M	
	MMI	**53S441**	**4101**
	Motorola	MCM7643M	
	National	DM54S573A	
	Signetics	S82HS137	
		S82S137	
		S82S195	
	TI	TBP24S41M	
DM54S573A	AMD	AM27S33M	
	MMI	**53S441**	**4101**
	Motorola	MCM7643M	
	National	DM54S573	
DM54S573A	Signetics	S82HS137	
		S82S137	
		S82S195	
	TI	TBP24S41M	
DM7093	**Fairchild**	**54125**	**616**
	National	DM54125	
	TI	**SN54125**	**712**
DM7094	National	DM54126	
	Signetics	54126	
	TI	**SN54126**	**712**
DM7095	Signetics	S8T95	
	TI	**SN54365A**	**712**
DM7096	**TI**	**SN54366A**	**712**
DM7097	Signetics	S8T97	
	TI	**SN54367A**	**712**
DM7098	Signetics	S8T98	
	TI	**SN54368A**	**712**
DM7121	National	DM54251	
	TI	**SN54251**	**712**
DM7160	National	DM8160	
DM7213	Fairchild	9311	
	National	DM74154	
		DM8311	
	Raytheon	RC9311	
	Signetics	**74154**	**1157**
	TI	SN74154	
DM7214	**Fairchild**	**54LS253**	**608,613,621,623**
	Motorola	**SN54LS253**	**1129**
	National	DM54LS253	
	SGS	T54LS253	
	Signetics	54LS253	
	TI	SN54LS253	
DM7281	National	DM54177	
	Raytheon	RM8281	
	Signetics	54177	
		S7281	
		S8281	
	TI	**SN54177**	**712**
DM7400	Fairchild	7400	
	Signetics	**7400**	**1156**
	TI	SN7400	
	Toshiba	TC7400	
DM7401	Fairchild	7401	
	TI	SN7401	
DM7402	Fairchild	7402	
	Signetics	**7402**	**1156**
	TI	SN7402	
DM7403	Fairchild	7403	
	Signetics	**7403**	**1156**
	TI	SN7403	
DM7404	Fairchild	7404	
	Signetics	**7404**	**1156**
	TI	SN7404	
	Toshiba	TC7404	
DM7405	Fairchild	7405	
	Signetics	**7405**	**1156**
	TI	SN7405	
DM7406	Fairchild	7406	
	Signetics	**7406**	**1156**
	TI	SN7406	
DM7407	Fairchild	7407	
	Hitachi	HD7407	
	Signetics	**7407**	**1156**
	TI	SN7407	
DM7408	Fairchild	7408	
	Signetics	**7408**	**1156**
	TI	SN7408	
DM7409	Fairchild	7409	
	TI	SN7409	
DM7410	Fairchild	7410	
	Signetics	**7410**	**1156**
	TI	SN7410	
	Toshiba	TC7410	
DM74107	Fairchild	74107	
	Signetics	**74107**	**1156**
	TI	SN74107	
DM74109	**Signetics**	**74109**	**1156**
	TI	SN74109	
DM7411	Fairchild	7411	
	Hitachi	HD7411	
	Signetics	**7411**	**1156**
DM74121	Fairchild	74121	
	Signetics	**74121**	**1157**
	TI	SN74121	
DM74123	Fairchild	74123	
	Signetics	**74123**	**1157**
	TI	SN74123	
DM74125	Fairchild	74125	
	National	DM8093	
	Signetics	**74125**	**1157**
DM74125	TI	SN74125	
		SN74425	
DM74126	Fairchild	74126	
	National	DM8094	
	Signetics	**74126**	**1157**
	TI	SN74126	
		SN74426	
DM7413	Fairchild	7413	
	Signetics	**7413**	**1156**
	TI	SN7413	
DM74132	Fairchild	74132	
	Signetics	**74132**	**1157**
	TI	SN74132	
DM7414	Fairchild	7414	
	Signetics	**7414**	**1156**
	TI	SN7414	
DM74141	Fairchild	74141	
		93141	
	Hitachi	HD7441	
	National	DM7441	
	Signetics	74141	
		7441	
	TI	SN74141	
DM74145	Fairchild	74145	
	Signetics	**74145**	**1157**
	TI	SN74145	
DM74147	Motorola	MC14508	
	RCA	CD4508	
	SGS	HCC/HCF4508	
	Signetics	**74147**	**1157**
		HEF4508	
		N82147	
	Solitron	CM4508	
	SSS	SCL4508	
	TI	SN74147	
	Toshiba	TC4508	
DM74148	National	DM8318	
	Signetics	**74148**	**1157**
		N82148	
	TI	SN74148	
DM74150	Fairchild	74150	
	Signetics	**74150**	**1157**
	TI	SN74150	
DM74153	Fairchild	74153	
	Signetics	**74153**	**1157**
	TI	SN74153	
DM74155	Fairchild	74155	
	Signetics	**74155**	**1157**
	TI	SN74155	
DM74156	Fairchild	74156	
	Signetics	**74156**	**1157**
	TI	SN74156	
DM74157	**Signetics**	**74157**	**1157**
	TI	SN74157	
DM7416	Fairchild	7416	
	Signetics	**7416**	**1156**
	TI	SN7416	
DM74160	Fairchild	74160	
	Signetics	**74160**	**1157**
	TI	SN74160	
DM74161	Fairchild	74161	
	Signetics	**74161**	**1157**
	TI	SN74161	
DM74162	Fairchild	74162	
	TI	SN74162	
DM74163	Fairchild	74163	
	Signetics	**74163**	**1157**
	TI	SN74163	
DM74165	Fairchild	74165	
	National	DM8590	
	Signetics	**74165**	**1157**
	TI	SN74165	
DM74166	Fairchild	74166	
	Signetics	**74166**	**1157**
	TI	SN74166	
DM7417	Fairchild	7417	
	Signetics	**7417**	**1156**
	TI	SN7417	
DM74170	Fairchild	74170	
	Hitachi	HD74170	
	Signetics	**74170**	**1157**
	TI	SN74170	
DM74173	Fairchild	74173	
	National	DM8551	
	Raytheon	RC8T10	
	Signetics	**N8T10**	**1175**
	TI	SN74173	
DM74174	Fairchild	74174	
	Signetics	**74174**	**1157**
	TI	SN74174	
DM74175	Fairchild	74175	
	Signetics	**74175**	**1157**
	TI	SN74175	
DM74176	Fairchild	74176	
		96176	
	National	DM8280	
	Raytheon	RC8280	
	Signetics	74176	
	TI	SN74176	
DM74177	Fairchild	74177	
	National	DM8281	
	Raytheon	RC8281	
	Signetics	74177	
	TI	SN74177	
DM74180	Fairchild	74180	
	Signetics	**74180**	**1157**
	TI	SN74180	
DM74181	Hitachi	HD74181	
	Raytheon	RC9341	
	Signetics	**74181**	**1157**
	TI	SN74181	
DM74182	TI	SN74182	
DM74184	TI	SN74184	
DM74185A	TI	SN74185A	
DM74190	Fairchild	74190	
	Signetics	**74190**	**1157**
	TI	SN74190	
DM74191	Fairchild	74191	
	Signetics	**74191**	**1157**
	TI	SN74191	
DM74192	Fairchild	74192	
	National	DM8560	
	Raytheon	RC9360	
	Signetics	**74192**	**1157**
	TI	SN74192	
DM74194	Fairchild	74194	
	Signetics	**74194**	**1157**
	TI	SN74194	
DM74195	Fairchild	74195	
	Signetics	**74195**	**1157**
	TI	SN74195	
DM74196	Fairchild	74196	
	National	DM8290	
	Raytheon	RC8290	
	Signetics	74196	
	TI	SN74196	
DM74197	Fairchild	74197	
	National	DM8291	
	Raytheon	RC8291	
	Signetics	74197	
	TI	SN74197	
DM74198	Fairchild	74198	
	Signetics	74198	
	TI	SN74198	
DM74199	Fairchild	74199	
	Signetics	**74199**	**1157**
	TI	SN74199	
DM7420	Fairchild	7420	
		9004	
	National	DM9004C	
	Signetics	**7420**	**1156**
	TI	SN7420	
	Toshiba	TC7420	
DM7423	Fairchild	7423	
	TI	SN7423	
DM7425	Fairchild	7425	
	TI	SN7425	
DM74251	National	DM8121	
	TI	SN74251	
DM7426	Fairchild	7426	
	National	DM8810	
	Signetics	**7426**	**1156**
	TI	SN7426	
DM7427	Fairchild	7427	
	Signetics	**7427**	**1156**
	TI	SN7427	
DM7430	Fairchild	7430	
	Signetics	**7430**	**1156**
	TI	SN7430	
DM7432	Fairchild	7432	
	Signetics	**7432**	**1156**
	TI	SN7432	
DM7437	Fairchild	7437	
	Signetics	**7437**	**1156**
	TI	SN7437	
DM7438	Fairchild	7438	
	Signetics	**7438**	**1156**
	TI	SN7438	
DM7440	Fairchild	7440	
	Signetics	**7440**	**1156**
	TI	SN7440	

(Continued)

(Continued)

◆ Discontinued

The manufacturers report their devices can be used as direct replacements.
Performance details often differ, so compare the specifications considering your requirements.

National Semiconductor (Cont'd)

Manufacturer Device	Replacement Source	Device	IC Master Page
DM7441	Fairchild	74141	
		93141	
	Hitachi	HD7441	
	National	DM74141	
	Signetics	74141	
		7441	
	TI	SN74141	
DM7442	Fairchild	7442	
	National	DM8842	
	Signetics	**7442**	1156
	TI	SN7442A	
DM7445	Fairchild	7445	
	Signetics	**7445**	1156
	TI	SN7445	
DM7450	Fairchild	7450	
	Signetics	**7450**	1156
	TI	SN7450	
DM7451	Fairchild	7451	
	Hitachi	HD7451	
	Signetics	**7451**	1156
	TI	SN7451	
DM7453	Fairchild	7453	
	TI	SN7453	
DM7454	Fairchild	7454	
	TI	SN7454	
DM7460	Fairchild	7460	
	TI	SN7460	
DM7470	Fairchild	7470	
	Hitachi	HD7470	
	TI	SN7470	
DM7472	Fairchild	7472	
	TI	SN7472	
DM7473	Fairchild	7473	
	Signetics	**7473**	1156
	TI	SN7473	
DM7474	Fairchild	7474	
	Signetics	**7474**	1156
	TI	SN7474	
DM7475	Fairchild	7475	
	Signetics	**7475**	1156
	TI	SN7475	
DM7476	Fairchild	7476	
	Signetics	**7476**	1156
	TI	SN7476	
DM7482	Hitachi	HD7482	
	TI	SN7482	
DM7485	Fairchild	7485	
	Signetics	**7485**	1156
	TI	SN7485	
DM7486	Fairchild	7486	
	Signetics	**7486**	1156
	TI	SN7486	
DM7489	Fairchild	7489	
	National	DM74S289	
		DM8589	
		MM74S289	
	Signetics	74S289	
		N82S25	
	TI	SN74S289B	
DM7496	Fairchild	7496	
	Signetics	**7496**	1156
	TI	SN7496	
DM74ALS00	Motorola	SN74ALS00	
	TI	SN74ALS00A	
DM74ALS01	TI	SN74ALS01	
DM74ALS02	Motorola	SN74ALS02	
	TI	SN74ALS02	
DM74ALS03	TI	SN74ALS03A	
DM74ALS04	Motorola	SN74ALS04	
	TI	SN74ALS04A	
DM74ALS05	TI	SN74ALS05A	
DM74ALS08	Motorola	SN74ALS08	
	TI	SN74ALS08	
DM74ALS09	Motorola	SN74ALS09	
	TI	SN74ALS09	
DM74ALS10	TI	SN74ALS10	
DM74ALS1000	TI	SN74ALS1000A	
DM74ALS1002	TI	SN74ALS1002A	
DM74ALS1003	TI	SN74ALS1003A	
DM74ALS1004	TI	SN74ALS1004	
DM74ALS1005	TI	SN74ALS1005	
DM74ALS1008	TI	SN74ALS1008A	
DM74ALS1010	TI	SN74ALS1010A	
DM74ALS1011	TI	SN74ALS1011A	
DM74ALS1020	TI	SN74ALS1020A	
DM74ALS1032	TI	SN74ALS1032A	
DM74ALS1034	TI	SN74ALS1034	
DM74ALS1035	TI	SN74ALS1035	
DM74ALS109	TI	SN74ALS109A	
DM74ALS11	TI	SN74ALS11A	
DM74ALS112	TI	SN74ALS112A	
DM74ALS113	TI	SN74ALS113A	
DM74ALS114	TI	SN74ALS114A	
DM74ALS12	TI	SN74ALS12A	
DM74ALS1242	TI	SN74ALS1242	
DM74ALS1243	TI	SN74ALS1243	
DM74ALS1244	TI	SN74ALS1244A	
DM74ALS1245	TI	SN74ALS1245A	
DM74ALS131	TI	SN74ALS131	
DM74ALS133	TI	SN74ALS133	
DM74ALS136	TI	SN74ALS136	
DM74ALS137	TI	SN74ALS137	
DM74ALS138	TI	SN74ALS138	
DM74ALS15	TI	SN74ALS15A	
DM74ALS151	TI	SN74ALS151	
DM74ALS153	TI	SN74ALS153	
DM74ALS160	Motorola	SN74ALS160	
	TI	SN74ALS160A	
DM74ALS161	Motorola	SN74ALS161	
	TI	SN74ALS161A	
DM74ALS162	Motorola	SN74ALS162	
	TI	SN74ALS162A	
DM74ALS1621	TI	SN74ALS1621	
DM74ALS163	Motorola	SN74ALS163	
	TI	SN74ALS163A	
DM74ALS1640	TI	SN74ALS1640A	
DM74ALS168	TI	SN74ALS168B	
DM74ALS169	TI	SN74ALS169B	
DM74ALS174	TI	SN74ALS174	
DM74ALS175	TI	SN74ALS175	
DM74ALS190	TI	SN74ALS190	
DM74ALS191	TI	SN74ALS191	
DM74ALS192	Motorola	SN74ALS192	
	TI	SN74ALS192	
DM74ALS193	Motorola	SN74ALS193	
	TI	SN74ALS193	
DM74ALS20	TI	SN74ALS20A	
DM74ALS21	TI	SN74ALS21	
DM74ALS22	TI	SN74ALS22B	
DM74ALS240	Motorola	SN74ALS240	
	TI	SN74ALS240A	
DM74ALS241	Motorola	SN74ALS241	
	TI	SN74ALS241A	
DM74ALS242	Motorola	SN74ALS242	
	TI	SN74ALS242	
DM74ALS243	Motorola	SN74ALS243	
	TI	SN74ALS243A	
DM74ALS244	Motorola	SN74ALS244	
	TI	SN74ALS244A	
DM74ALS245	Motorola	SN74ALS245	
	TI	SN74ALS245A	
DM74ALS251	TI	SN74ALS251	
DM74ALS253	TI	SN74ALS253	
DM74ALS257	TI	SN74ALS257	
DM74ALS258	TI	SN74ALS258	
DM74ALS27	TI	SN74ALS27	
DM74ALS273	Motorola	SN74ALS273	
	TI	SN74ALS273	
DM74ALS28	TI	SN74ALS28A	
DM74ALS30	TI	SN74ALS30	
DM74ALS32	Motorola	SN74ALS32	
	TI	SN74ALS32	
DM74ALS33	TI	SN74ALS33	
DM74ALS352	TI	SN74ALS352	
DM74ALS353	TI	SN74ALS353	
DM74ALS37	TI	SN74ALS37A	
DM74ALS373	Motorola	SN74ALS373	
	TI	SN74ALS373	
DM74ALS374	Motorola	SN74ALS374	
	TI	SN74ALS374	
DM74ALS377	Motorola	SN74ALS377	
DM74ALS38	TI	SN74ALS38A	
DM74ALS40	TI	SN74ALS40A	
DM74ALS465	TI	SN74ALS465A	
DM74ALS466	TI	SN74ALS466A	
DM74ALS467	TI	SN74ALS467A	
DM74ALS468	TI	SN74ALS468A	
DM74ALS518	TI	SN74ALS518	
DM74ALS519	TI	SN74ALS519	
DM74ALS520	TI	SN74ALS520	
DM74ALS521	TI	SN74ALS521	
DM74ALS522	TI	SN74ALS522	
DM74ALS533	TI	SN74ALS533	
DM74ALS534	TI	SN74ALS534	
DM74ALS563	TI	SN74ALS563	
DM74ALS564	TI	SN74ALS564	
DM74ALS573	Motorola	SN74ALS573	
	TI	SN74ALS573	
DM74ALS574	Motorola	SN74ALS574	
	TI	SN74ALS574	
DM74ALS576	Motorola	SN74ALS576	
	TI	SN74ALS576	
DM74ALS580	Motorola	SN74ALS580	
	TI	SN74ALS580	
DM74ALS620	Motorola	SN74ALS620	
	TI	SN74ALS620A	
DM74ALS621	Motorola	SN74ALS621	
	TI	SN74ALS621A	
DM74ALS622	Motorola	SN74ALS622	
DM74ALS623	Motorola	SN74ALS623	
	TI	SN74ALS623A	
DM74ALS640	Motorola	SN74ALS640	
	TI	SN74ALS640A	
DM74ALS641	Motorola	SN74ALS641	
	TI	SN74ALS641A	
DM74ALS642	Motorola	SN74ALS642	
	TI	SN74ALS642A	
DM74ALS643	Motorola	SN74ALS643	
	TI	SN74ALS643A	
DM74ALS644	Motorola	SN74ALS644	
	TI	SN74ALS644A	
DM74ALS645	TI	SN74ALS645A	
DM74ALS646	Motorola	SN74ALS646	
DM74ALS647	Motorola	SN74ALS647	
DM74ALS648	Motorola	SN74ALS648	
DM74ALS649	Motorola	SN74ALS649	
DM74ALS689	TI	SN74ALS689	
DM74ALS690	Motorola	SN74ALS690	
DM74ALS691	Motorola	SN74ALS691	
DM74ALS692	Motorola	SN74ALS692	
DM74ALS693	Motorola	SN74ALS693	
DM74ALS697	Motorola	SN74ALS697	
DM74ALS698	Motorola	SN74ALS698	
DM74ALS699	Motorola	SN74ALS699	
DM74ALS74	Motorola	SN74ALS74	
	TI	SN74ALS74A	
DM74ALS804	TI	SN74ALS804	
DM74ALS805	TI	SN74ALS805	
DM74ALS808	TI	SN74ALS808	
DM74ALS810	TI	SN74ALS810	
DM74ALS811	TI	SN74ALS811	
DM74ALS832	TI	SN74ALS832	
DM74ALS873	Motorola	SN74ALS873	
	TI	SN74ALS873	
DM74ALS874	Motorola	SN74ALS874	
	TI	SN74ALS874	
DM74ALS876	Motorola	SN74ALS876	
	TI	SN74ALS876	
DM74ALS880	Motorola	SN74ALS880	
	TI	SN74ALS880	
DM74AS00	TI	SN74AS00	
DM74AS02	TI	SN74AS02	
DM74AS04	TI	SN74AS04	
DM74AS08	TI	SN74AS08	
DM74AS10	TI	SN74AS10	
DM74AS1000	TI	SN74AS1000	
DM74AS1004	TI	SN74AS1004	
DM74AS1008	TI	SN74AS1008	
DM74AS1032	TI	SN74AS1032	
DM74AS1034	TI	SN74AS1034	
DM74AS1036	TI	SN74AS1036	
DM74AS109	TI	SN74AS109	
DM74AS11	TI	SN74AS11	
DM74AS136	TI	SN74ALS136	
DM74AS151	TI	SN74AS151	
DM74AS153	TI	SN74AS153	
DM74AS157	TI	SN74AS157	
DM74AS158	TI	SN74AS158	
DM74AS160	TI	SN74AS160	
DM74AS161	TI	SN74AS161	
DM74AS162	TI	SN74AS162	
DM74AS163	TI	SN74AS163	
DM74AS168	TI	SN74AS168	
DM74AS169	TI	SN74AS169	
DM74AS174	TI	SN74AS174	
DM74AS175	TI	SN74AS175	
DM74AS181	TI	SN74AS181B	
DM74AS182	TI	SN74AS182	
DM74AS20	TI	SN74AS20	
DM74AS21	TI	SN74AS21	
DM74AS230	TI	SN74AS230	
DM74AS231	TI	SN74AS231	
DM74AS240	TI	SN74AS240	
DM74AS241	TI	SN74AS241	
DM74AS242	TI	SN74AS242	
DM74AS243	TI	SN74AS243	
DM74AS244	TI	SN74AS244	
DM74AS245	TI	SN74AS245	
DM74AS250	TI	SN74AS250	
DM74AS253	TI	SN74AS253	
DM74AS257	TI	SN74AS257	
DM74AS258	TI	SN74AS258	
DM74AS2620	TI	SN74AS2620	
DM74AS2623	TI	SN74AS2623	
DM74AS264	TI	SN74AS264	
DM74AS2640	TI	SN74AS2640	
DM74AS2645	TI	SN74AS2645	
DM74AS27	TI	SN74AS27	
DM74AS280	TI	SN74AS280	
DM74AS282	TI	SN74AS282	
DM74AS286	TI	SN74AS286	
DM74AS30	TI	SN74AS30	
DM74AS32	TI	SN74AS32	
DM74AS34	TI	SN74AS34	
DM74AS352	TI	SN74AS352	
DM74AS353	TI	SN74AS353	
DM74AS373	TI	SN74AS373	
DM74AS374	TI	SN74AS374	
DM74AS533	TI	SN74AS533	
DM74AS534	TI	SN74AS534	
DM74AS573	TI	SN74AS573	
DM74AS574	TI	SN74AS574	
DM74AS575	TI	SN74AS575	
DM74AS576	TI	SN74AS576	
DM74AS577	TI	SN74AS577	
DM74AS580	TI	SN74AS580	
DM74AS620	TI	SN74AS620	
DM74AS621	TI	SN74AS621	
DM74AS622	TI	SN74AS622	
DM74AS623	TI	SN74AS623	
DM74AS638	TI	SN74AS638	
DM74AS639	TI	SN74AS639	
DM74AS640	TI	SN74AS640	
DM74AS641	TI	SN74AS641	
DM74AS642	TI	SN74AS642	
DM74AS643	TI	SN74AS643	
DM74AS644	TI	SN74AS644	
DM74AS645	TI	SN74AS645	
DM74AS646	TI	SN74AS646	
DM74AS648	TI	SN74AS648	
DM74AS651	TI	SN74AS651	
DM74AS652	TI	SN74AS652	
DM74AS74	TI	SN74AS74	
DM74AS804A	TI	SN74AS804A	
DM74AS805A	TI	SN74AS805A	
DM74AS808A	TI	SN74AS808A	
DM74AS810	TI	SN74AS810	
DM74AS811	TI	SN74AS811	
DM74AS832A	TI	SN74AS832A	
DM74AS873	TI	SN74AS873	
DM74AS874	TI	SN74AS874	
DM74AS876	TI	SN74AS876	
DM74AS878	TI	SN74AS878	
DM74AS879	TI	SN74AS879	
DM74AS880	TI	SN74AS880	
DM74AS881A	TI	SN74AS881A	
DM74AS95	TI	SN74AS95	
DM74H00	Fairchild	74H00	
	TI	SN74H00	
DM74H01	Fairchild	74H01	
		74H08	
	National	DM74H08	
	TI	SN74H01	
DM74H04	Fairchild	74H04	
	TI	SN74H04	
◆DM74H05	Fairchild	74H05	
	TI	SN74H05	
DM74H08	Fairchild	74H01	
		74H08	
	National	DM74H01	
	TI	SN74H01	
DM74H10	Fairchild	74H10	
	TI	SN74H10	
DM74H103	Fairchild	74H103	
	TI	SN74H103	
DM74H106	Fairchild	74H106	
	TI	SN74H106	
DM74H108	Fairchild	74H108	
	TI	SN74H108	
DM74H11	Fairchild	74H11	
	TI	SN74H11	
DM74H20	Fairchild	74H20	
	TI	SN74H20	
DM74H21	Fairchild	74H21	
	TI	SN74H21	
◆DM74H22	Fairchild	74H22	
	TI	SN74H22	
DM74H30	Fairchild	74H30	
	TI	SN74H30	
DM74H40	Fairchild	74H40	
	TI	SN74H40	
DM74H50	Fairchild	74H50	
	TI	SN74H50	

◆ Discontinued

Bold face device numbers indicate manufacturers data is provided in the IC Master on the pages noted.

ALTERNATE SOURCE DIRECTORY

National Semiconductor (Cont'd)

Manufacturer Device	Replacement Source	Device	IC Master Page
DM74H51	Fairchild	74H51	
	TI	SN74H51	
◆DM74H52	Fairchild	74H52	
	TI	SN74H52	
◆DM74H53	Fairchild	74H53	
	TI	SN74H53	
◆DM74H54	Fairchild	74H54	
	TI	SN74H54	
◆DM74H55	Fairchild	74H55	
	TI	SN74H55	
◆DM74H60	TI	SN74H60	
◆DM74H61	Fairchild	74H61	
	TI	SN74H61	
DM74H62	Fairchild	74H62	
	TI	SN74H62	
◆DM74H71	TI	SN74H71	
◆DM74H72	Fairchild	74H72	
◆DM74H73	Fairchild	74H73	
	TI	SN74H73	
DM74H74	Fairchild	74H74	
	TI	SN74H74	
◆DM74H76	TI	SN74H76	
◆DM74H78	TI	SN74H78	
DM74L164	National	DM86L70	
DM74L192	National	DM85L60	
DM74L193	National	DM85L63	
DM74LS00	**Fairchild**	**74LS00**	**5311**
	Hitachi	HD74LS00	
	Motorola	**SN74LS00**	**1122**
	Panasonic	DN74LS00	
	SGS	T74LS00	
	Signetics	**74LS00**	**1156**
	TI	SN74LS00	
DM74LS01	Fairchild	74LS01	
	Hitachi	HD74LS01	
	Motorola	**SN74LS01**	**1122**
	Panasonic	DN74LS01	
	Signetics	**74LS01**	**1156**
	TI	SN74LS01	
DM74LS02	**Fairchild**	**74LS02**	**5311**
	Hitachi	HD74LS02	
	Motorola	**SN74LS02**	**1122**
	Panasonic	DN74LS02	
	SGS	T74LS02	
	Signetics	**74LS02**	**1156**
	TI	SN74LS02	
DM74LS03	**Fairchild**	**74LS03**	**5311**
	Hitachi	HD74LS03	
	Motorola	**SN74LS03**	**1122**
	Panasonic	DN74LS03	
	SGS	T74LS03	
	TI	SN74LS03	
DM74LS04	**Fairchild**	**74LS04**	**5311**
	Hitachi	HD74LS04	
	Motorola	**SN74LS04**	**1124**
	Panasonic	DN74LS04	
	SGS	T74LS04	
	Signetics	**74LS04**	**1156**
	TI	SN74LS04	
DM74LS05	**Fairchild**	**74LS05**	**5311**
	Hitachi	HD74LS05	
	Motorola	**SN74LS05**	**1124**
	Panasonic	DN74LS05	
	SGS	T74LS05	
	Signetics	**74LS05**	**1156**
	TI	SN74LS05	
DM74LS08	**Fairchild**	**74LS08**	**5311**
	Hitachi	HD74LS08	
	Motorola	**SN74LS08**	**1122**
	Panasonic	DN74LS08	
	SGS	T74LS08	
	Signetics	**74LS08**	**1156**
	TI	SN74LS08	
DM74LS09	**Fairchild**	**74LS09**	**5311**
	Hitachi	HD74LS09	
	Motorola	**SN74LS09**	**1122**
	Panasonic	DN74LS09	
	SGS	T74LS09	
	TI	SN74LS09	
DM74LS10	**Fairchild**	**74LS10**	**5311**
	Hitachi	HD74LS10	
	Motorola	**SN74LS10**	**1122**
	Panasonic	DN74LS10	
	SGS	T74LS10	
	Signetics	**74LS10**	**1156**
	TI	SN74LS10	
DM74LS109	**Fairchild**	**74LS109**	**5311**
	Hitachi	HD74LS109	
	Motorola	SN74LS109	
DM74LS109	**Motorola**	**SN74LS109A**	**1126**
	Panasonic	DN74LS109	
	SGS	T74LS109	
	Signetics	**74LS109**	**1156**
	TI	SN74LS109A	
DM74LS11	**Fairchild**	**74LS11**	**5311**
	Hitachi	HD74LS11	
	Motorola	**SN74LS11**	**1122**
	Panasonic	DN74LS11	
	SGS	T74LS11	
	Signetics	**74LS11**	**1156**
	TI	SN74LS11	
DM74LS112	**Fairchild**	**74LS112**	**5311**
	Hitachi	HD74LS112	
	Motorola	**SN74LS112A**	**1126**
	Panasonic	DN74LS112	
	SGS	T74LS112	
	Signetics	**74LS112**	**1156**
	TI	SN74LS112A	
DM74LS113	**Fairchild**	**74LS113**	**5311**
	Hitachi	HD74LS113	
	Motorola	**SN74LS113A**	**1126**
	Panasonic	DN74LS113	
	SGS	T74LS113	
	Signetics	**74LS113**	**1156**
	TI	SN74LS113A	
DM74LS114	**Fairchild**	**74LS114**	**5311**
	Hitachi	HD74LS114	
	Motorola	**SN74LS114A**	**1126**
	Panasonic	DN74LS114	
	SGS	T74LS114	
	TI	SN74LS114A	
DM74LS12	Hitachi	HD74LS12	
	Motorola	**SN74LS12**	**1122**
	Panasonic	DN74LS12	
	Signetics	74LS12	
	TI	SN74LS12	
DM74LS122	**Motorola**	**SN74LS122**	**1131**
	TI	SN74LS122	
DM74LS123	Hitachi	HD74LS123	
	Motorola	**SN74LS123**	**1131**
	Panasonic	DN74LS123	
	TI	SN74LS123	
DM74LS125	Fairchild	74LS125A	
	Motorola	**SN74LS125A**	**1124**
	Panasonic	DN74LS125A	
	SGS	T74LS125	
	Signetics	**74LS125A**	**1157**
	TI	SN74LS125A	
DM74LS126	**Fairchild**	**74LS126**	**5311**
	Motorola	**SN74LS126A**	**1124**
	SGS	T74LS126	
	Signetics	**74LS126A**	**1157**
	TI	SN74LS126A	
DM74LS13	**Fairchild**	**74LS13**	**5311**
	Hitachi	HD74LS13	
	Motorola	**SN74LS13**	**1125**
	Panasonic	DN74LS13	
	SGS	T74LS13	
	Signetics	**74LS13**	**1156**
	TI	SN74LS13	
DM74LS132	**Fairchild**	**74LS132**	**5311**
	Hitachi	HD74LS132	
	Motorola	**SN74LS132**	**1125**
	Panasonic	DN74LS132	
	SGS	T74LS132	
	Signetics	**74LS132**	**1157**
	TI	SN74LS132	
DM74LS136	**Fairchild**	**74LS136**	**5311**
	Hitachi	HD74LS136	
	Motorola	**SN74LS136**	**1123**
	Panasonic	DN74LS136	
	SGS	T74LS136	
	Signetics	**74LS136**	**1157**
	TI	SN74LS136	
DM74LS138	**Fairchild**	**74LS138**	**5311**
	Hitachi	HD74LS138	
	Motorola	**SN74LS138**	**1130**
	Panasonic	DN74LS138	
	SGS	T74LS138	
	Signetics	**74LS138**	**1157**
	TI	SN74LS138	
DM74LS139	**Fairchild**	**74LS139**	**5311**
	Hitachi	HD74LS139	
	Motorola	**SN74LS139**	**1130**
	Panasonic	DN74LS139	
	SGS	T74LS139	
	Signetics	**74LS139**	**1157**
	TI	SN74LS139A	
DM74LS14	**Fairchild**	**74LS14**	**5311**
	Hitachi	HD74LS14	
	Motorola	**SN74LS14**	**1125**
DM74LS14	Panasonic	DN74LS14	
	Signetics	**74LS14**	**1156**
	TI	SN74LS14	
DM74LS15	**Fairchild**	**74LS15**	**5311**
	Motorola	**SN74LS15**	**1122**
	Panasonic	DN74LS15	
	SGS	T74LS15	
	TI	SN74LS15	
DM74LS151	**Fairchild**	**74LS151**	**5311**
	Hitachi	HD74LS151	
		HD74LS151A	
	Motorola	**SN74LS151**	**1129**
	Panasonic	DN74LS151	
	SGS	T74LS151	
	Signetics	**74LS151**	**1157**
	TI	SN74LS151	
DM74LS153	**Fairchild**	**74LS153**	**5311**
	Hitachi	HD74LS153	
	Motorola	**SN74LS153**	**1129**
	Panasonic	DN74LS153	
	SGS	T74LS153	
	Signetics	**74LS153**	**1157**
	TI	SN74LS153	
DM74LS154	**Signetics**	**74LS154**	**1157**
DM74LS155	**Fairchild**	**74LS155**	**5311**
	Hitachi	HD74LS155	
	Motorola	**SN74LS155**	**1130**
	Panasonic	DN74LS155	
	Signetics	**74LS155**	**1157**
	TI	SN74LS155A	
DM74LS156	**Fairchild**	**74LS156**	**5311**
	Hitachi	HD74LS156	
	Motorola	**SN74LS156**	**1130**
	Panasonic	DN74LS156	
	SGS	T74LS156	
	Signetics	**74LS156**	**1157**
	TI	SN74LS156	
DM74LS157	**Fairchild**	**74LS157**	**5311**
	Hitachi	HD74LS157	
	Motorola	**SN74LS157**	**1129**
	Panasonic	DN74LS157	
	SGS	T74LS157	
	Signetics	**74LS157**	**1157**
	TI	SN74LS157	
DM74LS158	**Fairchild**	**74LS158**	**5311**
	Hitachi	HD74LS158	
	Motorola	**SN74LS158**	**1129**
	Panasonic	DN74LS158	
	SGS	T74LS158	
	Signetics	**74LS158**	**1157**
	TI	SN74LS158	
DM74LS160	**Fairchild**	**74LS160**	**5311**
	Hitachi	HD74LS160A	
	Motorola	**SN74LS160A**	**1127**
	Panasonic	DN74LS160A	
	SGS	T74LS160	
	Signetics	74LS160	
		74LS160A	**1157**
	TI	SN74LS160A	
DM74LS161	Fairchild	74LS161A	
	Hitachi	HD74LS161A	
	Motorola	**SN74LS161A**	**1127**
	Panasonic	DN74LS161A	
	SGS	T74LS161	
	Signetics	**74LS161A**	**1157**
	TI	SN74LS161A	
DM74LS162	**Fairchild**	**74LS162**	**5311**
	Hitachi	HD74LS162A	
	Motorola	**SN74LS162A**	**1127**
	Panasonic	DN74LS162A	
	SGS	T74LS162	
	Signetics	**74LS162A**	**1157**
	TI	SN74LS162A	
DM74LS163	**Fairchild**	**74LS163**	**5311**
	Hitachi	HD74LS163	
		HD74LS163A	
	Motorola	**SN74LS163A**	**1127**
	Panasonic	DN74LS163A	
	SGS	T74LS163	
	Signetics	**74LS163A**	**1157**
	TI	SN74LS163A	
DM74LS164	**Fairchild**	**74LS164**	**5311**
	Hitachi	HD74LS164	
	Motorola	SN74LS164A	
	Panasonic	DN74LS164	
	SGS	T74LS164	
	Signetics	**74LS164**	**1157**
		74LS164A	
	TI	SN74LS164	
DM74LS169	**Fairchild**	**74LS169**	**5311**
	Hitachi	HD74LS169	
	Motorola	**SN74LS169**	**1127**
DM74LS169	SGS	T74LS169	
	Signetics	**74LS169A**	**1157**
	TI	SN74LS169	
DM74LS170	**Fairchild**	**74LS170**	**5311**
	Motorola	**SN74LS170**	**1128**
	Panasonic	DN74LS170	
	SGS	T74LS170	
	Signetics	**74LS170**	**1157**
	TI	SN74LS170	
DM74LS173	Fairchild	74LS173	
	Motorola	**SN74LS173A**	**1126**
	Panasonic	DN74LS173	
	SGS	T74LS173	
	Signetics	**74LS173**	**1157,1158**
	TI	SN74LS173A	
DM74LS174	**Fairchild**	**74LS174**	**5311**
	Hitachi	HD74LS174	
	Motorola	**SN74LS174**	**1126**
	Panasonic	DN74LS174	
	SGS	T74LS174	
	Signetics	**74LS174**	**1157**
	TI	SN74LS174	
DM74LS189	Cypress	CY74S189	
	Fairchild	74LS189	
	TI	SN74LS189A	
DM74LS190	Fairchild	74LS190	
	Hitachi	HD74LS190	
	Motorola	**SN74LS190**	**1127**
	Panasonic	DN74LS190	
	SGS	T74LS190	
	TI	SN74LS190	
DM74LS191	Fairchild	74LS191	
	Hitachi	HD74LS191	
	Motorola	**SN74LS191**	**1127**
	Panasonic	DN74LS191	
	SGS	T74LS191	
	Signetics	**74LS191**	**1157**
	TI	SN74LS191	
DM74LS192	**Fairchild**	**74LS192**	**5311**
	Hitachi	HD74LS192	
	Motorola	**SN74LS192**	**1127**
	Panasonic	DN74LS192	
	SGS	T74LS192	
	Signetics	**74LS192**	**1157**
	TI	SN74LS192	
DM74LS193	**Fairchild**	**74LS193**	**5311**
	Hitachi	HD74LS193	
	Motorola	**SN74LS193**	**1127**
	Panasonic	DN74LS193	
	SGS	T74LS193	
	Signetics	**74LS193**	**1157**
	TI	SN74LS193	
DM74LS194	**Fairchild**	**74LS194A**	**5311**
	Hitachi	HD74LS194A	
	Motorola	**SN74LS194A**	**1128**
	Panasonic	DN74LS194A	
	SGS	T74LS194A	
	Signetics	**74LS194A**	**1157**
	TI	SN74LS194A	
DM74LS195	**Fairchild**	**74LS195A**	**5311**
	Hitachi	HD74LS195A	
	Motorola	**SN74LS195A**	**1128**
	Panasonic	DN74LS195A	
	SGS	L7924	
		T74LS195A	
	Signetics	**74LS195A**	**1157**
	TI	SN74LS195A	
DM74LS196	**Fairchild**	**74LS196**	**5311**
	Hitachi	HD74LS196	
	Motorola	**SN74LS196**	**1127**
	Panasonic	DN74LS196	
	SGS	574LS196	
	Signetics	N82S80	
	TI	SN74LS196	
DM74LS197	**Fairchild**	**74LS197**	**5311**
	Hitachi	HD74LS197	
	Motorola	**SN74LS197**	**1127**
	Panasonic	DN74LS197	
	SGS	T74LS197	
	Signetics	**74LS197**	**1157**
	TI	SN74LS197	
DM74LS20	**Fairchild**	**74LS20**	**5311**
	Hitachi	HD74LS20	
	Motorola	**SN74LS20**	**1122**
	Panasonic	DN74LS20	
	SGS	T74LS20	
	Signetics	**74LS20**	**1156**
	TI	SN74LS20	
DM74LS21	**Fairchild**	**74LS21**	**5311**
	Hitachi	HD74LS21	
	Motorola	**SN74LS21**	**1122**

(Continued)

◆ Discontinued

The manufacturers report their devices can be used as direct replacements.
Performance details often differ, so compare the specifications considering your requirements.

National Semiconductor (Cont'd)

Manufacturer Device	Replacement Source	Device	IC Master Page
DM74LS21	Panasonic	DN74LS21	
	SGS	T74LS21	
	Signetics	**74LS21**	1156
	TI	SN74LS21	
DM74LS22	Fairchild	74LS22	
	Hitachi	HD74LS22	
	Motorola	**SN74LS22**	1122
	Panasonic	DN74LS22	
	SGS	T74LS22	
	TI	SN74LS22	
DM74LS221	Fairchild	74LS221	
	Hitachi	HD74LS221	
	Motorola	**SN74LS221**	1131
	TI	SN74LS221	
DM74LS247	**Fairchild**	**74LS247**	5311
	Hitachi	HD74LS247	
	Motorola	**SN74LS247**	1130
	TI	SN74LS247	
DM74LS248	**Fairchild**	**74LS248**	5311
	Hitachi	HD74LS248	
	Motorola	**SN74LS248**	1130
	SGS	T74LS248	
	TI	SN74LS248	
DM74LS249	**Fairchild**	**74LS249**	5311
	Hitachi	HD74LS249	
	Motorola	**SN74LS249**	1130
	SGS	T74LS249	
	TI	SN74LS249	
DM74LS251	**Fairchild**	**74LS251**	5311
	Hitachi	HD74LS251	
	Motorola	**SN74LS251**	1129
	Panasonic	DN74LS251	
	SGS	T74LS251	
	Signetics	**74LS251**	1158
	TI	SN74LS251	
DM74LS253	**Fairchild**	**74LS253**	5311
	Hitachi	HD74LS253	
	Motorola	**SN74LS253**	1129
	National	DM8214	
	Panasonic	DN74LS253	
	SGS	T74LS253	
	Signetics	**74LS253**	1158
	TI	SN74LS253	
DM74LS257	Fairchild	74LS257A	
	Hitachi	HD74LS257	
	Motorola	**SN74LS257A**	1129
	SGS	T74LS257	
	Signetics	74LS257	
		74LS257A	1158
	TI	SN74LS257B	
DM74LS258	Fairchild	74LS258A	
	Hitachi	HD74LS258	
	Motorola	**SN74LS258A**	1129
	Panasonic	DN74LS258A	
	SGS	T74LS258	
	Signetics	74LS258	
	TI	SN74LS258B	
DM74LS26	**Fairchild**	**74LS26**	5311
	Hitachi	HD74LS26	
	Motorola	**SN74LS26**	1122
	Panasonic	DN74LS26	
	SGS	T74LS26	
	Signetics	**74LS26**	1156
	TI	SN74LS26	
DM74LS266	**Fairchild**	**74LS266**	5311
	Motorola	**SN74LS266**	1123
	Panasonic	DN74LS266	
	Raytheon	RC8242	
	SGS	T74LS266	
	Signetics	**74LS266**	1158
		N8242	1175
	TI	SN74LS266	
DM74LS27	**Fairchild**	**74LS27**	5311
	Hitachi	HD74LS27	
	Motorola	**SN74LS27**	1122
	Panasonic	DN74LS27	
	SGS	T74LS27	
	Signetics	**74LS27**	1156
	TI	SN74LS27	
DM74LS279	**Fairchild**	**74LS279**	5311
	Hitachi	HD74LS279	
	Motorola	**SN74LS279**	1126
	Panasonic	DN74LS279	
	SGS	T74LS279	
	Signetics	74LS279	
	TI	SN74LS279A	
DM74LS283	**Fairchild**	**74LS283**	5311
	Hitachi	HD74LS283	
		HD74LS283A	
		(Continued)	
DM74LS283	**Motorola**	**SN74LS283**	1132
	Panasonic	DN74LS283	
	SGS	T74LS283	
	Signetics	**74LS283**	1158
	TI	SN74LS283	
DM74LS289	Fairchild	74LS289	
	TI	SN74LS289A	
DM74LS290	**Fairchild**	**74LS290**	5311
	Hitachi	HD74LS290	
	Motorola	**SN74LS290**	1127
	Panasonic	DN74LS290	
	SGS	T74LS290	
	Signetics	**74LS290**	1158
	TI	SN74LS290	
DM74LS293	**Fairchild**	**74LS293**	5311
	Hitachi	HD74LS293	
	Motorola	**SN74LS293**	1127
	Panasonic	DN74LS293	
	SGS	T74LS293	
	Signetics	**74LS293**	1158
	TI	SN74LS293	
DM74LS30	**Fairchild**	**74LS30**	5311
	Hitachi	HD74LS30	
	Motorola	**SN74LS30**	1122
	Panasonic	DN74LS30	
	SGS	T74LS30	
	Signetics	**74LS30**	1156
	TI	SN74LS30	
DM74LS352	**Fairchild**	**74LS352**	5311
	Motorola	**SN74LS352**	1129
	SGS	T74LS352	
	TI	SN74LS352	
DM74LS353	**Fairchild**	**74LS353**	5311
	Motorola	**SN74LS353**	1129
	SGS	T74LS353	
	TI	SN74LS353	
DM74LS365	Fairchild	74LS365A	
	Motorola	**SN74LS365A**	1124
	Panasonic	DN74LS365A	
	SGS	T74LS365	
		T74LS365A	
	Signetics	74LS365	
		74LS365A	1158
	TI	SN74LS365A	
DM74LS366	Fairchild	74LS366A	
	Motorola	**SN74LS366A**	1124
	Panasonic	DN74LS366A	
	SGS	T74LS366	
		T74LS366A	
	Signetics	**74LS366A**	1158
	TI	SN74LS366A	
DM74LS367	Fairchild	74LS367A	
	Hitachi	HD74LS367	
		HD74LS367A	
	Motorola	**SN74LS367A**	1124
	Panasonic	DN74LS367A	
	SGS	T74LS367	
		T74LS367A	
	Signetics	74LS367	
		74LS367A	1158
	TI	SN74LS367A	
DM74LS368	Fairchild	74LS368A	
	Hitachi	HD74LS368	
	Motorola	**SN74LS368A**	1124
	Panasonic	DN74LS368A	
	SGS	T74LS368	
	Signetics	74LS368	
		74LS368A	1158
	TI	SN74LS368A	
DM74LS37	**Fairchild**	**74LS37**	5311
	Hitachi	HD74LS37	
	Motorola	**SN74LS37**	1122
	Panasonic	DN74LS37	
	SGS	T74LS37	
	Signetics	**74LS37**	1156
	TI	SN74LS37	
DM74LS374	**Fairchild**	**74LS374**	5311
	MMI	SN74LS374	
	Motorola	**SN74LS374**	1126
	SGS	T74LS374	
	Signetics	**74LS374**	1158
	TI	SN74LS374	
DM74LS38	**Fairchild**	**74LS38**	5311
	Hitachi	HD74LS38	
	Motorola	**SN74LS38**	1122
	Panasonic	DN74LS38	
	SGS	T74LS38	
	Signetics	**74LS38**	1156
	TI	SN74LS38	
DM74LS386	Hitachi	HD74LS386	
	Motorola	**SN74LS386**	1123
		(Continued)	
DM74LS386	Panasonic	DN74LS386	
	TI	SN74LS386A	
DM74LS395	**Fairchild**	**74LS395**	5311
	Panasonic	DN74LS395A	
	SGS	T74LS395	
	Signetics	74LS395	
	TI	SN74LS395A	
DM74LS40	**Fairchild**	**74LS40**	5311
	Hitachi	HD74LS40	
	Motorola	**SN74LS40**	1122
	Panasonic	DN74LS40	
	SGS	T74LS40	
	Signetics	**74LS40**	1156
	TI	SN74LS40	
DM74LS42	**Fairchild**	**74LS42**	5311
	Hitachi	HD74LS42	
	Motorola	**SN74LS42**	1130
	Panasonic	DN74LS42	
	SGS	T74LS42	
	Signetics	**74LS42**	1156
	TI	SN74LS42	
DM74LS47	**Fairchild**	**74LS47**	5311
	Hitachi	HD74LS47	
	Motorola	**SN74LS47**	1130
	SGS	T74LS47	
	TI	SN74LS47	
DM74LS471	**MMI**	**6309**	4102
DM74LS48	**Fairchild**	**74LS48**	5311
	Hitachi	HD74LS48	
	Motorola	**SN74LS48**	1130
	SGS	T74LS48	
	Signetics	74LS48	
	TI	SN74LS48	
DM74LS49	Fairchild	74LS49	
	Hitachi	HD74LS49	
	Motorola	**SN74LS49**	1130
	SGS	T74LS49	
	TI	SN74LS49	
DM74LS51	**Fairchild**	**74LS51**	5311
	Hitachi	HD74LS51	
	Motorola	**SN74LS51**	1123
	Panasonic	DN74LS51	
	SGS	T74LS51	
	Signetics	**74LS51**	1156
	TI	SN74LS51	
DM74LS54	**Fairchild**	**74LS54**	5311
	Hitachi	HD74LS54	
	Motorola	**SN74LS54**	1123
	Panasonic	DN74LS54	
	SGS	T74LS54	
	Signetics	**74LS54**	1156
	TI	SN74LS54	
DM74LS55	**Fairchild**	**74LS55**	5311
	Hitachi	HD74LS55	
	Motorola	**SN74LS55**	1123
	Panasonic	DN74LS55	
	SGS	T74LS55	
	TI	SN74LS55	
DM74LS670	**Fairchild**	**74LS670**	5311
	Motorola	**SN74LS670**	1128
	SGS	T74LS670	
	Signetics	74LS670	
	TI	SN74LS670	
DM74LS73	Hitachi	HD74LS73	
	Motorola	**SN74LS73A**	1126
	Panasonic	DN74LS73	
	Signetics	**74LS73**	1156
	TI	SN74LS73A	
DM74LS74	**Fairchild**	**74LS74**	5311
	Hitachi	HD74LS74	
		HD74LS74A	
	Motorola	**SN74LS74A**	1126
	Panasonic	DN74LS74A	
	SGS	T74LS74	
	Signetics	74LS74	
	TI	SN74LS74A	
DM74LS75	Hitachi	HD74LS75	
	Motorola	**SN74LS75**	1126
	Panasonic	DN74LS75	
	Signetics	**74LS75**	1156
	TI	SN74LS75	
DM74LS76	Hitachi	HD74LS76	
	Motorola	**SN74LS76A**	1126
	Panasonic	DN74LS76	
	Signetics	**74LS76**	1156
	TI	SN74LS76A	
DM74LS78	Hitachi	HD74LS78	
	Motorola	**SN74LS78A**	1126
	Panasonic	DN74LS78	
	TI	SN74LS78A	
DM74LS797	Motorola	81LS97	
DM74LS798	Motorola	81LS98	
DM74LS83A	Fairchild	74LS83A	
	Hitachi	HD74LS183A	
		HD74LS83A	
	Motorola	**SN74LS83A**	1132
	Panasonic	DN74LS83A	
	SGS	T74LS83	
	Signetics	74LS83	
		74LS83A	1156
	TI	SN74LS83A	
DM74LS85	**Fairchild**	**74LS85**	5311
	Hitachi	HD74LS85	
	Motorola	**SN74LS85**	1131
	Panasonic	DN74LS85	
	Signetics	**74LS85**	1156
	TI	SN74LS85	
DM74LS86	**Fairchild**	**74LS86**	5311
	Hitachi	HD74LS86	
	Motorola	**SN74LS86**	1123
	Panasonic	DN74LS86	
	SGS	T74LS86	
	Signetics	**74LS86**	1156
	TI	SN74LS86A	
DM74LS90	**Fairchild**	**74LS90**	5311
	Motorola	**SN74LS90**	1127
	Panasonic	DN74LS90	
	SGS	T74LS90	
	Signetics	**74LS90**	1156
	TI	SN74LS90	
DM74LS92	**Fairchild**	**74LS92**	5311
	Hitachi	HD74LS92	
	Motorola	**SN74LS92**	1127
	Panasonic	DN74LS92	
	SGS	T74LS92	
	Signetics	**74LS92**	1156
	TI	SN74LS92	
DM74LS93	**Fairchild**	**74LS93**	5311
	Hitachi	HD74LS93	
	Motorola	**SN74LS93**	1127
	Panasonic	DN74LS93	
	SGS	T74LS93	
	Signetics	**74LS93**	1156
	TI	SN74LS93	
DM74LS95B	**Fairchild**	**74LS95B**	5311
	Hitachi	HD74LS95B	
	Motorola	**SN74LS95B**	1128
	Panasonic	DN74LS95B	
	SGS	T74LS95	
		T74LS95B	
	Signetics	**74LS95B**	1156
	TI	SN74LS95B	
DM74S00	Fairchild	74S00	
	Signetics	**74S00**	1156
	TI	SN74S00	
DM74S02	Fairchild	74S02	
	Signetics	**74S02**	1156
	TI	SN74S02	
		SN74S32	
DM74S03	Fairchild	74S03	
	Signetics	**74S03**	1156
	TI	SN74S03	
DM74S04	Fairchild	74S04	
	Signetics	**74S04**	1156
	TI	SN74S04	
DM74S05	Fairchild	74S05	
	Signetics	**74S05**	1156
	TI	SN74S05	
DM74S10	Fairchild	74S10	
	Signetics	**74S10**	1156
	TI	SN74S10	
DM74S11	Fairchild	74S11	
	Signetics	**74S11**	1156
	TI	SN74S11	
DM74S112	Fairchild	74S112	
	Motorola	SN74S112	
	Signetics	**74S112**	1156
	TI	SN74S112	
DM74S113	Fairchild	74S113	
	Signetics	**74S113**	1156
	TI	SN74S113	
DM74S114	TI	SN74S114	
DM74S133	Fairchild	74S133	
	Signetics	**74S133**	1157
	TI	SN74S133	
DM74S134	**Signetics**	**74S134**	1157
	TI	SN74S134	
DM74S135	Fairchild	74S135	
	Signetics	**74S135**	1157
	TI	SN74S135	
DM74S138	AMD	SN74S138	
	Fairchild	74S138	
	Signetics	**74S138**	1157
	TI	SN74S138	

◆ Discontinued

Bold face device numbers indicate manufacturers data is provided in the IC Master on the pages noted.

National Semiconductor (Cont'd)

Manufacturer Device	Replacement Source	Device	IC Master Page
DM74S140	Fairchild	74S140	
	Signetics	**74S140**	**1157**
	TI	SN74S140	
DM74S15	Fairchild	74S15	
	TI	SN74S15	
DM74S182	Fairchild	74S182	
	MMI	SN74S182	
	Signetics	**74S182**	**1157**
	TI	SN74S182	
DM74S188	AMD	AM27S18	
	Fujitsu	MB7111	
	Harris	HM7602	
	MMI	**6330**	**4102**
	Signetics	**N82S23**	**4166**
	TI	TBP18SA30	
DM74S189	AMD	AM27LS03	
		AM27S03	
		SN74S189	
	Cypress	CY27S03	
		CY74S189	
		CY7C189	
		CY7CS189	
	Fairchild	74S189	
		93405	
	National	DM7599	
		DM8599	
	TI	SN74S189B	
DM74S20	Fairchild	74S20	
	Signetics	**74S20**	**1156**
	TI	SN74S20	
DM74S22	Fairchild	74S22	
	TI	SN74S22	
DM74S251	AMD	SN74S251	
	Signetics	**74S251**	**1158**
	TI	SN74S251	
DM74S280	**Signetics**	**74S280**	**1158**
	TI	SN74S280	
DM74S281	TI	SN74S281	
DM74S287	AMD	27521	
		AM27S11	
		AM27S21	
	Fujitsu	MB7114	
	MMI	6301-1	
		63S141	**4101.4102**
	Signetics	**N82S129**	**4166**
	TI	**TBP24S10**	**729**
DM74S288	AMD	AM27LS19	
		AM27S19	
	Fujitsu	MB7112	
	MMI	5331-1	
		53S081	**4101**
		6331-1	
		63S081	**4101.4102**
	Motorola	MCM27S19	
	National	DM8578	
	Signetics	**N82S123**	**4166**
		S82S123	
	TI	**TBP18S030**	**729**
DM74S289	Fairchild	7489	
	National	DM7489	
		DM8589	
		MM74S289	
	Signetics	74S289	
		N82S25	
	TI	SN74S289B	
DM74S30	Fairchild	74S30	
	TI	SN74S30	
DM74S387	AMD	AM27S20	
	Fujitsu	MB7113	
	MMI	6300-1	
		63S140	**4101.4102**
	Signetics	**N82S126**	**4166**
	TI	TBP24SA10	
DM74S40	Fairchild	74S40	
	Signetics	**74S40**	**1156**
	TI	SN74S40	
DM74S472	AMD	AM27S29	
	Fujitsu	MB7124	
	MMI	6349-2	
	National	DM54S472	
	Raytheon	**29623**	**4134**
	Signetics	N82S147	
DM74S473	AMD	AM27S28	
	Fujitsu	MB7123	
	MMI	6348-1	
	Signetics	N82S146	
	TI	TBP28SA42	
DM74S474	AMD	AM27S31	
	MMI	6341-1	
			(Continued)
DM74S474	**Motorola**	**MCM7641**	**4124**
	Signetics	N82S141	
	TI	TBP28S46	
DM74S475	AMD	AM27S30	
	MMI	6340-1	
	National	DM77S475	
		DM87S475	
	Signetics	N82S140	
	TI	TBP28SA46	
DM74S51	Fairchild	74S51	
	Signetics	**74S51**	**1156**
	TI	SN74S51	
DM74S570	AMD	AM27S12	
	Fujitsu	MB7115	
	MMI	6305-1	
		63S240	**4101.4102**
	Signetics	**N82S130**	**4166**
DM74S571	AMD	AM27S13	
	Fujitsu	MB7116	
	Harris	HM7621	
	MMI	6306-1	
		63S241	**4101.4102**
	Motorola	**MCM7621**	**4124**
	Signetics	**N82S131**	**4166**
DM74S573	AMD	AM27S33	
	Fairchild	93453	
	Fujitsu	MB7122	
	Hitachi	HN25045	
	MMI	5353-1	
		535441	
		6353-1	
		63S441	**4101.4102**
		G35441	
	Motorola	**MCM7643**	**4124**
	NEC	UPB426	
	Signetics	N72HS137	
		N825137	
		N82S137	**4166**
		S82S195	
	TI	TBP24S41	
DM74S65	Fairchild	74S65	
	TI	SN74S65	
DM74S74	Fairchild	74S74	
	Hitachi	HD74S74	
	Signetics	**74S74**	**1156**
	TI	SN74S74	
DM74S86	Fairchild	74S86	
	Signetics	**74S86**	**1156**
	TI	SN74S86	
DM7551	**Fairchild**	**54173**	**617**
	National	DM54173	
	Raytheon	RM8T10	
	TI	**SN54173**	**712**
DM7560	National	DM54192	
	TI	**SN54192**	**712**
DM7563	National	DM54193	
	TI	**SN54193**	**712**
DM7570	**Fairchild**	**54164**	**616**
	National	DM54164	
	Signetics	54164	
	TI	**SN54164**	**712**
DM7577	AMD	AM27LS18	
	MMI	5330-1	
		53LS080	
		63LS080	
	National	DM54S188	
	Signetics	S82S23	
DM7578	National	DM54S288	
	TI	**TBP18S030M**	**729**
DM7590	**Fairchild**	**54165**	**617**
	National	DM54165	
	Signetics	54165	
	TI	**SN54165**	**712**
DM7599	AMD	AM27LS03	
		AM27S03	
		SN74S189	
	Cypress	CY27S03	
		CY74S189	
		CY7C189	
		CY7CS189	
	Fairchild	74S189	
		93405	
	National	DM74S189	
		DM8599	
	TI	SN74S189B	
DM76L70	National	DM54L164	
DM77S180	MMI	5380-1	
	Signetics	S82S180	
	TI	TBP28SA86AM	
DM77S181	AMD	AM27S181M	
	Cypress	CY7C282M	
	Fairchild	932451	
			(Continued)
DM77S181	Fairchild	93451	
	Fujitsu	MB7132	
	Harris	7681	
	Hitachi	HN25089	
	MMI	5381-1	
		6381	**4102**
		6381-1	
	Motorola	**MCM7681**	**4124**
	National	DM77S281	
		DM87S281	
	Raytheon	29631AM	
		29632	
	Signetics	82S181	
		NS82HS195	
		S82HS181	
		S82S181	
	TI	28S86	
		TBP28S86AM	
DM77S184	MMI	5388	
		5388-1	
DM77S185	MMI	5389	
		5389-1	
	Raytheon	29651AM	
	Signetics	S82HS185	
		S82S185	
	TI	TBP24S81M	
DM77S190	AMD	AM27S190	
	Fairchild	937510	
	Fujitsu	MB7137	
	Hitachi	HN25168	
	National	DM87S190	
	Signetics	S82S190	
	TI	TBP28SA166	
DM77S191	EXEL	XL46C16	
	Fairchild	932511M	
	Fujitsu	MB7138E	
	Harris	HM6616	
		HM76161	
	Hitachi	HN25169S	
	MMI	**53S1681**	**4101**
	Motorola	**MCM76161**	**4124**
	National	DM77S191A	
		DM77S291	
		DM77S291A	
	Raytheon	**29681**	**4134**
		29681A	**4134**
		29683	**4134**
		29683A	**4134**
	ThomsonCSF	SFC71191A	
DM77S191A	EXEL	XL46C16	
	Fairchild	932511M	
	Fujitsu	MB7138E	
	Harris	HM6616	
		HM76161	
	Hitachi	HN25169S	
	MMI	**53S1681**	**4101**
	Motorola	**MCM76161**	**4124**
	National	DM77S191	
		DM77S291	
		DM77S291A	
	Raytheon	**29681**	**4134**
		29681A	**4134**
		29683	**4134**
		29683A	**4134**
	ThomsonCSF	SFC71191A	
DM77S195	AMD	AM27541	
		AM27S41	
	Fujitsu	MB7134	
		MB7152	
	MMI	**53S1641**	**4101**
		63S1641	**4101.4103**
	Motorola	**MCM76161**	**4124**
	National	DM87S195	
	Signetics	NS82HS195	
		NS82S195	
DM77S281	AMD	AM27S181M	
	Cypress	CY7C282M	
	Fairchild	932451	
		93451	
	Fujitsu	MB7132	
	Harris	7681	
	Hitachi	HN25089	
	MMI	5381-1	
		6381	**4102**
		6381-1	
	Motorola	**MCM7681**	**4124**
	National	DM77S181	
		DM87S281	
	Raytheon	29631AM	
		29632	
	Signetics	82S181	
			(Continued)
DM77S281	Signetics	NS82HS195	
		S82HS181	
		S82S181	
	TI	28S86	
		TBP28S86AM	
DM77S291	EXEL	XL46C16	
	Fairchild	932511M	
	Fujitsu	MB7138E	
	Harris	HM6616	
		HM76161	
	Hitachi	HN25169S	
	MMI	**53S1681**	**4101**
	Motorola	**MCM76161**	**4124**
	National	DM77S191	
		DM77S191A	
		DM77S291A	
	Raytheon	**29681**	**4134**
		29681A	**4134**
		29683	**4134**
		29683A	**4134**
	ThomsonCSF	SFC71191A	
DM77S291A	EXEL	XL46C16	
	Fairchild	932511M	
	Fujitsu	MB7138E	
	Harris	HM6616	
		HM76161	
	Hitachi	HN25169S	
	MMI	**53S1681**	**4101**
	Motorola	**MCM76161**	**4124**
	National	DM77S191	
		DM77S191A	
		DM77S291	
	Raytheon	**29681**	**4134**
		29681A	**4134**
		29683	**4134**
		29683A	**4134**
	ThomsonCSF	SFC71191A	
DM77S295	MMI	5340-1	
	National	DM54S475	
		DM87S295	
	Signetics	S82S140	
DM77S321	Signetics	S82S321	
DM77S401	Cypress	CY7C401	
	Fairchild	**74F413**	**1027**
	MMI	**57401**	**691**
DM77S402	Cypress	CY7C402	
	MMI	**57402**	**691**
DM77S475	AMD	AM27S30	
	MMI	6340-1	
	National	DM74S475	
		DM87S475	
	Signetics	N82S140	
	TI	TBP28SA46	
DM7800	TI	SN55180	
DM7875A	**TI**	**SN54284**	**712**
DM7875B	**TI**	**SN54285**	**712**
DM8093	Fairchild	74125	
	National	DM74125	
	Signetics	**74125**	**1157**
	TI	SN74125	
		SN74425	
DM8094	Fairchild	74126	
	National	DM74126	
	Signetics	**74126**	**1157**
	TI	SN74126	
		SN74426	
DM8095	**Motorola**	**MC6885**	**3209**
		MC8T95	**3209**
	Signetics	**N8T95**	**1175**
	TI	SN74365	
DM8121	National	DM74251	
	TI	SN74251	
DM8160	National	DM7160	
DM8214	**Fairchild**	**74LS253**	**5311**
	Hitachi	HD74LS253	
	Motorola	**SN74LS253**	**1129**
	National	DM74LS253	
	Panasonic	DN74LS253	
	SGS	T74LS253	
	Signetics	**74LS253**	**1158**
	TI	SN74LS253	
DM8280	Fairchild	74176	
		96176	
	National	DM74176	
	Raytheon	RC8280	
	Signetics	74176	
	TI	SN74176	
DM8281	Fairchild	74177	
	National	DM74177	
	Raytheon	RC8281	
	Signetics	74177	
	TI	SN74177	

◆ Discontinued

The manufacturers report their devices can be used as direct replacements.
Performance details often differ, so compare the specifications considering your requirements.

National Semiconductor (Cont'd)

Manufacturer Device	Replacement Source	Device	IC Master Page
DM8290	Fairchild	74196	
	National	DM74196	
	Raytheon	RC8290	
	Signetics	74196	
	TI	SN74196	
DM8291	Fairchild	74197	
	National	DM74197	
	Raytheon	RC8291	
	Signetics	74197	
	TI	SN74197	
DM8301	Fairchild	9031	
		9301	
	National	DM9301	
	Raytheon	RC8252	
	Signetics	S8252	
DM8309	Fairchild	9309	
	National	DM9309	
DM8311	Fairchild	9311	
	National	DM7213	
		DM74154	
	Raytheon	RC9311	
	Signetics	**74154**	**1157**
	TI	SN74154	
DM8312	Fairchild	9312	
	Raytheon	RC8230	
		RC9312	
DM8318	National	DM74148	
	Signetics	**74148**	**1157**
		N82148	
	TI	SN74148	
DM8322	Fairchild	9322	
	Raytheon	RC9322	
DM8334	Fairchild	9334	
	TI	SN74259	
DM8551	Fairchild	74173	
	National	DM74173	
	Raytheon	RC8T10	
	Signetics	**N8T10**	**1175**
	TI	SN74173	
DM8560	Fairchild	74192	
	National	DM74192	
	Raytheon	RC9360	
	Signetics	**74192**	**1157**
	TI	SN74192	
DM8578	AMD	AM27LS19	
		AM27S19	
	Fujitsu	MB7112	
	MMI	5331-1	
		53S081	**4101**
		6331-1	
		63S081	**4101,4102**
	Motorola	MCM27S19	
	National	DM74S288	
	Signetics	**N82S123**	**4166**
		S82S123	
	TI	**TBP18S030**	**729**
DM8589	Fairchild	7489	
	National	DM7489	
		DM74S289	
		MM74S289	
	Signetics	74S289	
		N82S25	
	TI	SN74S289B	
DM8590	Fairchild	74165	
	National	DM74165	
	Signetics	**74165**	**1157**
	TI	SN74165	
DM8599	AMD	AM27LS03	
		AM27S03	
		SN74S189	
	Cypress	CY27S03	
		CY74S189	
		CY7C189	
		CY7CS189	
	Fairchild	74S189	
		93405	
	National	DM74S189	
		DM7599	
	TI	SN74S189B	
DM85L60	National	DM74L192	
DM85L63	National	DM74L193	
DM8601	Fairchild	74122	
		9601	
	National	DM9601	
	Raytheon	RF8601	
		RF9601	
	Signetics	**N8T22**	**1175**
		S8T22	
	TI	SN74122	
DM8602	Fairchild	9602	
	National	DM9602	
	Raytheon	RF8602	
		RF9602	
DM86L70	National	DM74L164	
DM878291	AMD	AM27S191	
		AM27S291	
	Fairchild	932511	
	Fujitsu	MB7138H	
	Harris	HM76161	
	MMI	63S181	
	Motorola	MCM76	
	NEC	μPB429	
	Raytheon	**29683A**	**4134**
DM87S180	AMD	AM27S180	
	Fujitsu	MB7131	
	MMI	6380-1	
	National	DM87S229	
	Signetics	N82S180	
	TI	TBP28SA86A	
DM87S184	AMD	AM27S184	
	Fujitsu	MB7127	
	Hitachi	HM25045	
	MMI	6388	
		6388-1	
	Signetics	N82S184	
	TI	TBP24SA81	
DM87S185	AMD	27S185	
		AM27S185	
	Fujitsu	MB7128	
	Hitachi	HN25085	
	MMI	5389	
		6389	**4102**
		6389-1	
		63S841	**4101,4102**
	Motorola	**MCM7685**	**4124**
	National	77S185	
		87S185	
	Raytheon	29651	
		29651A	**4134**
	Signetics	82S185	
		N82HS185	
		N82S185	**4166**
	TI	24S81	
		TBP24S81	
DM87S190	AMD	AM27S190	
	Fairchild	937510	
	Fujitsu	MB7137	
	Hitachi	HN25168	
	National	DM77S190	
	Signetics	S82S190	
	TI	TBP28SA166	
DM87S191	AMD	27S191	
		AM27S191	
	Fairchild	932511	
	Fujitsu	MB7138	
	Harris	76161	
		HM76161	
	Hitachi	HN25169	
	MMI	**63S1681**	**4101,4103**
	Motorola	MCM76101	
	National	77S191	
		87S191	
	Raytheon	**29681**	**4134**
	Signetics	82S191	
		N82S191	**4167**
	TI	28S166	
		TBP28S166	
DM87S195	AMD	AM27541	
		AM27S41	
	Fujitsu	MB7134	
		MB7152	
	MMI	**53S1641**	**4101**
		63S1641	**4101,4103**
	Motorola	**MCM76161**	**4124**
	National	DM77S195	
	Signetics	NS82HS195	
		NS82S195	
DM87S229	AMD	AM27S180	
	Fujitsu	MB7131	
	MMI	6380-1	
	National	DM87S180	
	Signetics	N82S180	
	TI	TBP28SA86A	
DM87S281	AMD	AM27S181M	
	Cypress	CY7C282M	
	Fairchild	932451	
		93451	
	Fujitsu	MB7132	
	Harris	7681	
			(Continued)
DM87S281	Hitachi	HN25089	
	MMI	5381-1	
		6381	**4102**
		6381-1	
	Motorola	**MCM7681**	**4124**
	National	DM77S181	
		DM77S281	
	Raytheon	29631AM	
		29632	
	Signetics	82S181	
		NS82HS195	
		S82HS181	
		S82S181	
	TI	28S86	
		TBP28S86AM	
DM87S295	MMI	5340-1	
	National	DM54S475	
		DM77S295	
	Signetics	S82S140	
DM87S321	AMD	27S43	
		AM27S43	
	Fujitsu	MB7142	
	MMI	**53S3281**	**691,4101**
		63S3281	**4101,4103**
	National	77S321	
		87S321	
	Raytheon	**29671**	**4134**
	Signetics	82S321	
		N82S321	**4167**
DM87S402	Cypress	CY7C402	
	MMI	67402	
DM87S475	AMD	AM27S30	
	MMI	6340-1	
	National	DM74S475	
		DM77S475	
	Signetics	N82S140	
	TI	TBP28SA46	
DM87SR181	AMD	AM27S35	
		AM27S37	
	Cypress	CY7C235	
	Fujitsu	MB7232	
	MMI	53RA881	
		63RA881	
		63RS881	**4101,4103**
	Motorola	MCM27S35	
DM87SR25	AMD	AM21L49	
		AM27S25	
	Cypress	CY7C225	
	Fujitsu	MB7226	
	MMI	**53RA481**	**4101**
		63RA481	**4101**
	Motorola	MCM27S25	
	National	DM87SR474	
DM87SR474	AMD	AM21L49	
		AM27S25	
	Cypress	CY7C225	
	Fujitsu	MB7226	
	MMI	**53RA481**	**4101**
		63RA481	**4101**
	Motorola	MCM27S25	
	National	DM87SR25	
DM8810	Fairchild	7426	
	National	DM7426	
	Signetics	**7426**	**1156**
	TI	SN7426	
DM8842	Fairchild	7442	
	National	DM7442	
	Signetics	**7442**	**1156**
	TI	SN7442A	
DM8875A	TI	SN74284	
DM8875B	TI	SN74285	
◆DM8893	National	DS75493	
◆DM8894	National	DS75494	
	TI	SN75494	
DM9004C	Fairchild	7420	
		9004	
	National	DM7420	
	Signetics	**7420**	**1156**
	TI	SN7420	
	Toshiba	TC7420	
DM9016C	**Fairchild**	**5404**	**609,616,622,623**
		9016	
	National	DM5404	
	TI	**SN5404**	**712**
DM9093	**Fairchild**	**9093**	**618**
	Motorola	MC853	
		MC953	
	Raytheon	RM993	
DM9094	Fairchild	9094	
	Motorola	MC856	
		MC956	
	Raytheon	RM9094	
		RM994	
DM9097	Fairchild	9097	
	Motorola	MC855	
		MC955	
	Raytheon	RM997	
DM930	**Fairchild**	**930**	**609,618,622,623**
		9930	
	Motorola	MC830	
		MC930	
	Raytheon	RM930	
DM9301	Fairchild	9031	
		9301	
	National	DM8301	
	Raytheon	RC8252	
	Signetics	S8252	
DM9309	Fairchild	9309	
	National	DM8309	
DM9311	**Fairchild**	**54154**	**616**
	National	DM54154	
	Raytheon	RM9311	
	Signetics	54154	
	TI	**SN54154**	**712**
DM9312	Raytheon	RM9312	
DM9316	Raytheon	RM9316	
DM9318	National	DM54148	
	Signetics	54148	
	TI	**SN54148**	**712**
DM932	**Fairchild**	**932**	**618**
		9932	
	Motorola	MC932	
	Raytheon	RM932	
DM9322	Raytheon	RM9322	
DM933	Fairchild	9933	
	Motorola	MC933	
DM9334	**TI**	**SN54259**	**712**
DM935	Fairchild	9135	
		9935	
	Motorola	MC835	
		MC935	
DM936	**Fairchild**	**936**	**609,618,622,623**
		9936	
	Motorola	MC936	
DM937	**Fairchild**	**937**	**618**
		9937	
	Motorola	MC837	
		MC937	
DM939	Raytheon	RM939	
DM944	**Fairchild**	**944**	**618**
		9944	
	Motorola	MC944	
DM945	**Fairchild**	**945**	**618**
		9945	
	Motorola	MC945	
DM946	**Fairchild**	**946**	**609,618,622,623**
		9946	
	Motorola	MC946	
DM948	**Fairchild**	**948**	**618**
		9948	
	Motorola	MC948	
DM949	**Fairchild**	**949**	**618**
	Motorola	MC949	
	Raytheon	RM949	
DM9567	Fairchild	9157	
	Motorola	MC857	
		MC957	
	National	DM957	
	Raytheon	RM957	
DM957	Fairchild	9157	
	Motorola	MC857	
		MC957	
	National	DM9567	
	Raytheon	RM957	
DM958	Fairchild	9158	
	Motorola	MC858	
		MC958	
	Raytheon	RM958	
DM9601	Fairchild	74122	
		9601	
	National	DM8601	
	Raytheon	RF8601	
		RF9601	
	Signetics	**N8T22**	**1175**
		S8T22	
	TI	SN74122	

◆ Discontinued

Bold face device numbers indicate manufacturers data is provided in the IC Master on the pages noted.

National Semiconductor (Cont'd)

Manufacturer Device	Replacement Source	Device	IC Master Page
DM9602	Fairchild	9602	
	National	DM8602	
	Raytheon	RF8602	
		RF9602	
DM961	Fairchild	9961	
	Motorola	MC961	
DM962	**Fairchild**	**962**	**609,618,622,623**
		9962	
	Motorola	MC962	
DM963	Fairchild	9963	
	Motorola	MC963	
	Raytheon	RM963	
DMPAL14H8	MMI	PAL14H8	
DP8216	Intel	8216	
	National	INS8216	
	NEC	μPB8216	
DP8224	AMD	8224	
	Intel	8224	
	National	INS8224	
DP8226	Intel	8226	
	Mitsubishi	M5L8226	
	National	INS8226	
	NEC	μPB8226	
DP8228	AMD	8228	
	Intel	8228	
	National	INS8228	
	NEC	μPB8228	
	TI	SN74S428	
		TIM8228	
DP8303	AMD	DP8303	
DP8304	AMD	8304	
		DP8304	
	Fujitsu	**MBL8286**	**1611**
	Harris	**82C86**	**1619,1622**
	Intel	8286	
		82C86	
	NEC	μPB8286	
		μPD71086	
	Nitron	NC82C86	
	OKI	82C86	
DP8307	AMD	DP8307	
DP8408	MMI	74S408	
DS0025	National	MH0025	
DS0056	National	MH0056	
DS1489A	**Exar**	**XR1489A**	**3561**
	Fairchild	UA150	
		UA212A	
		μA1489A	
	Motorola	**MC1489A**	**3211,3212**
	SGS	MC1489	
	Signetics	**MC1489A**	**3720,3726**
	SiliconG	SG1489A	
	TI	MC1489A	
		SN75189A	
DS1603	National	LM163	
◆DS1604	National	LM163A	
DS1611	National	LM1611	
DS1612	National	LM1612	
DS1613	National	LM1613	
DS1614	National	LM1614	
DS26LS31	AMD	AM26LS31	
	Motorola	**AM26LS31**	**3211,3212**
	TI	**AM26LS31**	**722**
DS26LS32	AMD	AM28LS32	
	TI	AM26LS32A	
DS26S10	AMD	AM26S10	
	Motorola	DC26S10	
	TI	AM26S10	
DS26S11	AMD	AM26S11	
	TI	AM26S11	
DS3245	Motorola	MC3245	
DS3486	**Motorola**	**MC3486**	**3211,3212**
	TI	MC3486	
DS3487	**Motorola**	**MC3487**	**3211,3212**
	National	DS3687	
	TI	MC3487	
DS3611	National	LM3611	
	Sprague	UDN-3611	
	TI	SN75471	
DS3612	National	DS3632	
		LM3612	
	Sprague	UDN-3612	
	TI	SN75472	

Manufacturer Device	Replacement Source	Device	IC Master Page
DS3613	National	LM3613	
	Sprague	UDN-3613	
	TI	SN75473	
DS3614	National	LM3614	
	Sprague	UDN-3614	
	TI	SN75474	
◆DS36147	Motorola	DS36147	
◆DS36177	Motorola	DS36177	
DS3625	Signetics	N8T25	
DS3632	National	DS3612	
		LM3612	
	Sprague	UDN-3612	
	TI	SN75472	
DS3650	**Motorola**	**MC3450**	**3211**
DS3651	**Motorola**	**MC3430**	**3631**
		MC3441	
DS3652	**Motorola**	**MC3452**	**3211**
DS3653	**Motorola**	**MC3432**	**3631**
DS3669	TI	SN75440	
DS3687	**Motorola**	**MC3487**	**3211,3212**
	National	DS3487	
	TI	MC3487	
DS55107	Motorola	MC55107	
	National	LM55107A	
	TI	**SN55107A**	**721**
		SN55107B	**721**
DS55108	Fairchild	55108	
	Motorola	MC55108	
	National	LM55108A	
	TI	**SN55108A**	**721**
		SN55108B	**721**
◆DS55109	**TI**	**SN55109A**	**721**
◆DS55110	**TI**	**SN55110A**	**721**
DS55121	Signetics	S8T13	
	TI	**SN55121**	**721**
DS55122	**TI**	**SN55122**	**721**
◆DS5520	National	LM5520	
	TI	SN5520	
◆DS5522	Motorola	MC5522	
		MC5523	
	National	LM5522	
	TI	SN5522	
◆DS5524	Fairchild	MC5524	
	Motorola	MC5524	
	National	LM5524	
	Raytheon	RM5524	
	TI	SN5524	
◆DS5528	Fairchild	MC5528	
	Motorola	MC5528	
	National	LM5528	
DS55325	Motorola	MC55325	
	SiliconG	SG55325	
	TI	**SN55325**	**722**
◆DS5534	Fairchild	MC5534	
	Motorola	MC5534	
	National	LM5534	
DS55365	**TI**	**SN55365**	**722**
◆DS5538	Motorola	MC5538	
◆DS55450	Signetics	55450	
	SiliconG	SG55450	
	TI	SN55450	
DS55451	Fairchild	55451	
	Signetics	55451	
	SiliconG	SG55451	
	TI	SN55451	
DS55452	Signetics	55452	
	SiliconG	SG55452	
	TI	SN55452	
DS55453	Fairchild	55453	
	National	LM55453	
	Signetics	55453	
	SiliconG	SG55453	
	TI	SN55453	
DS55454	Signetics	55454	
	SiliconG	SG55454	
	TI	SN55454	
DS55460	SiliconG	SG55460	
DS55461	SiliconG	SG55461	
	TI	**SN55461**	**722**
DS55462	SiliconG	SG55462	
	TI	**SN55462**	**722**
DS55463	SiliconG	SG55463	
	TI	**SN55463**	**722**
DS55464	SiliconG	SG55464	
	TI	**SN55464**	**722**
DS75107	Fairchild	75107	
	Motorola	**MC75107**	**3211**
	National	LM75107A	
	TI	SN75107B	
DS75108	Fairchild	75108	
	Motorola	**MC75108**	**3211**

(Continued)

Manufacturer Device	Replacement Source	Device	IC Master Page
DS75108	National	LM75108A	
	TI	SN75108B	
◆DS75109	Motorola	MC75109	
	TI	SN75109A	
DS75125	**Motorola**	**MC75125**	**3211**
	TI	SN75125	
DS75127	**Motorola**	**MC75127**	**3211**
	TI	SN75127	
DS75128	**Motorola**	**MC75128**	**3211**
	TI	SN75128	
DS75129	**Motorola**	**MC75129**	**3211**
	TI	SN75129	
DS75150	Fairchild	75150	
	TI	SN75150	
DS75154	Fairchild	75154	
	TI	SN75154	
DS75207	TI	SN75207B	
DS75208	TI	SN75208B	
◆DS7522	Motorola	MC7522	
	TI	SN7522	
◆DS7524	Fairchild	75S24	
	Motorola	MC7524	
	National	DS75S24	
	Signetics	7524	
	TI	SN75224	
		SN7524	
◆DS7528	Motorola	MC7528	
	Raytheon	RC7528	
	TI	SN7528	
	ThomsonCSF	SFC2528	
DS75324	TI	SN75324	
DS75325	Motorola	MC75325	
	SiliconG	SG55327	
		SG75325	
	TI	**SN55327**	**722**
		SN75325	
◆DS7534	Motorola	MC7534	
DS75361	TI	SN75361A	
DS75362	TI	SN75362	
◆DS75364	TI	SN75364	
DS75365	TI	SN75365	
◆DS7538	Fairchild	7538	
	Motorola	MC7538	
	National	LM7538	
DS75450	Fairchild	75450	
	SiliconG	SG75450	
DS75451	Fairchild	75451	
	SiliconG	SG75451	
DS75452	Fairchild	75452	
	SiliconG	SG75452	
	TI	SN75452B	
DS75453	Fairchild	75453	
	Motorola	MC75453	
	National	LM75453	
	SiliconG	SG75453	
	TI	SN75453B	
DS75454	SiliconG	SG75454	
	TI	SN75454B	
DS75460	Motorola	MC75460	
	SiliconG	SG75460	
	TI	SN75460	
DS75461	Fairchild	75461	
	Motorola	MC75401	
	SiliconG	SG75461	
	TI	SN75461	
DS75462	Fairchild	75462	
	Motorola	MC75402	
	SiliconG	SG75462	
	TI	SN75462	
DS75463	Motorola	MC75403	
	SiliconG	SG75463	
	TI	SN75463	
DS75464	Motorola	MC75404	
	National	SG75464	
	SiliconG	SG75464	
	TI	SN75464	
DS75494	TI	SN75494	
DS75S24	Fairchild	75S24	
	Motorola	MC7524	
	Signetics	7524	
	TI	SN75224	
		SN7524	
◆DS7803	National	MH7803	
DS7820	AD	AD7820	
	TI	**SN55182**	**721**
DS7830	**TI**	**SN55183**	**721**
DS7831	**TI**	**DS7831**	**721**
DS7832	**TI**	**DS7832**	**721**
DS7838	AMD	DS7838	
DS8615	Motorola	MC12015	
DS8616	Plessey	SP8793	
DS8617	Motorola	MC12017	

Manufacturer Device	Replacement Source	Device	IC Master Page
DS8621	Motorola	MC12071	
DS8627	Plessey	SP8656	
DS8628	Plessey	SP8658	
DS8640	Signetics	SP380	
DS8800	TI	SN75180	
DS8808	National	MH8808	
DS8820	National	DS8880	
	TI	DS8820	
		SN75182	
		SN75480	
DS8830	TI	DS8830	
		SN75183	
DS8831	TI	DS8831	
DS8832	TI	DS8832	
DS8834	**Signetics**	**N8T34**	**1175**
DS8836	**Signetics**	**N8T380**	**1175**
DS8837	**Motorola**	**MC3437**	**3211**
	Signetics	**N8T37**	**1175**
DS8880	National	DS8820	
	TI	DS8820	
		SN75182	
		SN75480	
DS8889	Dionics	DI230	
DS8T26A	Fairchild	μA8T26A	
	Motorola	**MC8T26A**	**3210**
	Signetics	**N8T26A**	**1175**
	TI	N8T26A	
DS8T28	Fairchild	UA96172	
		UA96173	
		UA96174	
		UA96175	
		UA96176	
		UA96177	
		UA96178	
		μA8T28	
IDM2901A	**Fairchild**	**29F01**	**1028**
		F2901A	
	ThomsonCSF	SFC2901	
IDM2909	Cypress	CY7C909	
	ThomsonCSF	SFC2909	
IDM2911	Cypress	CY7C911	
INS1771	Western	FD1771	
INS2651	Signetics	SCN2651	
	SMC	COM2651	
INS2652	Signetics	INS2652	
INS8035	AMD	8035	
	Intel	8035	
	NEC	μPD8035	
	Signetics	SCN8035	
	Toshiba	**TMP8035**	**1750**
INS8048	AMD	8048	
	Intel	8048	
	NEC	μPD8048	
	Signetics	SCN8048	
	Toshiba	**TMP8048**	**1750**
INS8049	Intel	8049	
	NEC	μPD8049	
	Signetics	SCN8049	
	Toshiba	**TMP8049**	**1750**
INS8060	National	ISP-8A/600	
	Signetics	ISP-8A/600	
INS8216	Intel	8216	
	National	DP8216	
	NEC	μPB8216	
INS8224	AMD	8224	
	Intel	8224	
	National	DP8224	
INS8226	Intel	8226	
	Mitsubishi	M5L8226	
	National	DP8226	
	NEC	μPB8226	
INS8228	AMD	8228	
	Intel	8228	
	National	DP8228	
	NEC	μPB8228	
	TI	SN74S428	
		TIM8228	
INS8253	AMD	8253	
	Intel	8253	
	NEC	UPD8253-2/-5	
	Toshiba	TMP8253	
INS8259	AMD	D8259	
	Fujitsu	MBL8259	
	Harris	**82C59A**	**682,1619,1621,1631**
		CP82C59A	
	Intel	8259	
		82C59A	
	NEC	UPD8259A/A-2	
	Nitron	NC82C59A	
	OKI	**MSM82C59A**	**4732**

(Continued)

◆ Discontinued

The manufacturers report their devices can be used as direct replacements.
Performance details often differ, so compare the specifications considering your requirements.

National Semiconductor (Cont'd)

Manufacturer Device	Replacement Source	Device	IC Master Page
INS8259	S-MOS	SMC82C59AC	
	Toshiba	TMP8259	
ISP-8A/600	National	INS8060	
	Signetics	ISP-8A/600	
LF11201	AD	ADG201	
	Harris	HI201	
	Intersil	DG201	
		IH201	
		IH5201	
	MicroPwr	MP201	
	National	LF13201	
	PMI	SW201	
	Siliconix	DG201A	
LF11202	PMI	SW-02	
	Siliconix	DG202	
LF11508	AD	AD7501	
	Burr-Brown	**MPC8S**	**3149**
	Datel	MUX808	
		MX-808	**3163**
	Harris	HI508	
	Intersil	IH6108	
	MicroPwr	MP7501	
		MP7508	
	National	LF13508	
	PMI	DMX-88	
		MUX-08	
		MUX-88	
	Siliconix	DG508A	
	TeledyneP	4554	
LF11509	**Burr-Brown**	**MPC4D**	**3149**
	Harris	HI509	
	Intersil	IH6208	
	MicroPwr	MP7509	
		MP7509DI	
	National	LF13509	
	PMI	MUX-24	
	Siliconix	DG509A	
	TeledyneP	4553	
LF12333	PMI	SW06	
◆LF12508	AD	AD7501	
	Burr-Brown	**MPC8S**	**3149**
	Datel	MUX808	
		MX-808	**3163**
	Harris	HI508	
	Intersil	IH6108	
	MicroPwr	MP7501	
		MP7508	
	National	LF11508	
		LF13508	
	PMI	DMX-88	
		MUX-08	
		MUX-88	
	Siliconix	DG508A	
	TeledyneP	4554	
◆LF12509	**Burr-Brown**	**MPC4D**	**3149**
	Harris	HI509	
	Intersil	IH6208	
	MicroPwr	MP7509	
		MP7509DI	
	National	LF11509	
		LF13509	
	PMI	MUX-24	
	Siliconix	DG509A	
	TeledyneP	4553	
LF13201	AD	ADG201	
	Harris	HI201	
	Intersil	DG201	
		IH201	
		IH5201	
	MicroPwr	MP201	
	National	LF11201	
	PMI	SW201	
	Siliconix	DG201A	
LF13202	PMI	SW-02	
		SW202	
	Siliconix	DG202	
LF13508	AD	AD7501	
	Burr-Brown	**MPC8S**	**3149**
	Datel	MUX808	
		MX-808	**3163**
	Harris	HI508	
	Intersil	IH6108	
	MicroPwr	MP7501	
		MP7508	
	National	LF11508	
	PMI	DMX-88	
		MUX-08	
		MUX-88	
LF13508	Siliconix	DG508A	
	TeledyneP	4554	
LF13509	**Burr-Brown**	**MPC4D**	**3149**
	Harris	HI509	
	Intersil	IH6208	
	MicroPwr	MP7509	
		MP7509DI	
	National	LF11509	
	PMI	MUX-24	
	Siliconix	DG509A	
	TeledyneP	4553	
LF147	Harris	LF147	
LF153	Harris	LF153	
LF155	AD	AD381	
		AD544	
	Burr-Brown	OPA606	
	LinearTech	LF155	
		LT1022	
		LT1055	
		LT1056	
		OP-15	
	National		
	PMI	OP-15	
	ThomsonCSF	LF155	
LF155A	LinearTech	LF155A	
	PMI	PM155A	
LF156	Burr-Brown	OPA156A	
	LinearTech	LF156	
		OP-16	
	MicroPwr	MPOP16	
	PMI	OP-16	
	ThomsonCSF	LF156	
LF156A	AMD	LF156A	
	AD	AD544	
	Burr-Brown	**OPA156A**	**3149,3150**
	Fairchild	LF156A	
	LinearTech	LF156A	
	PMI	PM156A	
	TI	**TL081**	**718**
LF157A	AMD	27S29	
		LF157A	
	Fairchild	LF157A	
	Harris	7649	
	MMI	5349-1	
		6349-1	
	National	545472	
		74S472	
	PMI	PM157A	
	Raytheon	**29621**	**4134**
	Signetics	825147	
	TI	28S42	
LF198	AMD	LF198	
	LinearTech	LF198	
	Signetics	**LF198**	**3725**
LF247	Harris	LF247	
LF253	Harris	LF253	
LF255	MicroPwr	MP255	
	PMI	PM255	
	ThomsonCSF	TDE0155	
LF256	ThomsonCSF	TDE0156	
LF298	Burr-Brown	SHC298	
	Datel	SHMLM2	
LF355	LinearTech	LF355	
	Motorola	**LF355**	**3616**
	PMI	PM355	
	ThomsonCSF	LF355	
LF355A	AMD	LF355A	
	LinearTech	LF355A	
	Motorola	LF355A	
	PMI	PM355A	
LF356	LinearTech	LF356	
	Motorola	**LF356**	**3616**
	PMI	PM356	
	ThomsonCSF	LF356	
LF356A	AMD	LF356A	
	Burr-Brown	**OPA356A**	**3149,3150**
	LinearTech	LF356A	
	Motorola	LF356A	
	PMI	PM356A	
LF398	LinearTech	LF398	
	National	LM298	
	PMI	SMP-10	
	Signetics	**LF398**	**3725**
		NE5537	**3692,3720**
LF412	Fairchild	UA1458HC	
	Harris	CM1458	
		HA5102	
	MicroPwr	MPOP14	
	Motorola	**MC1458**	**3617**
	NEC	MPC251	
LF412	PMI	OP14	
	RCA	**CA1458**	**3672**
	SGS	MC1458	
	Signetics	**SA1458**	**3729**
	ThomsonCSF	μA1458	
	Samsung	**MC1458**	**3679**
		MC4558	**3679**
LF441	Harris	HA-2720	
	Intersil	ICL7611	
		ICL8021	
		LM4250	
	Maxim	ICL7611	
	Motorola	**MC1776**	**3616**
	National	LM4250	
	PMI	OP20	
		OP21	
		OP22	
	SGS	MC1776	
	Solitron	UC4250	
	TI	TLC251	
		TLC271	
	ThomsonCSF	μA776	
LH0002	Elantec	EL2002	
		EL2003	**3537,3539**
		ELH0002	**3537**
	LinearTech	LT1010	
	Micra	MC0002	
		MC0021	
	OEI	9910	
	TeledyneC	LH0002	
LH0003	Micra	MC0003	
LH0004	Micra	MC0004	
LH0021	**Elantec**	**ELH0021**	**3537**
LH0022	AD	AD506	
		AD542	
	Burr-Brown	OPA506	
	National	LH740A	
		LM0052	
	TeledyneP	1424	
		1425	
LH0024	Micra	MC0024	
LH0032	**Elantec**	**EL2006**	**3537,3542**
		ELH0032	**3537**
	Harris	HA2541	
	Micra	MC0032	
	TeledyneC	LH0032	
	TeledyneP	0032	
LH0033	**Elantec**	**EL2004**	**3537,3540**
		EL2005	**3537,3541**
		ELH0033	**3537**
	Harris	HA-5033	
	Maxim	LH0033	
	Micra	MC0033	
	TeledyneC	LH0033	
	TeledyneP	1359	
LH0041	Elantec	LH0041	
	Micra	MC0041	
LH0042	AD	AD0042	
		AD503	
	Intersil	AD503	
		LH0042	
LH0052	AD	AD547	
	Burr-Brown	OPA1100	
	Harris	HA5170	
	PMI	OP41	
LH0062	AD	AD528	
LH0063	Maxim	LH0063	
	OEI	9963	
LH0101	**Apex**	**PA02**	**3525**
	Elantec	**ELH0101**	**3537**
	Maxim	LH0101	
LH2101	AMD	LH2101	
	Intersil	LH2101	
	Raytheon	LH2101	
LH2108	Intersil	LH2108	
	LinearTech	LH2108	
	PMI	MP2108	
		PM2108	
LH2108A	**Intersil**	**LH2108A**	**3600,3601**
	PMI	PM2108A	
LH2110	Intersil	LH2110	
LH2111	Raytheon	LH2111	
LH2208A	Intersil	LH2208A	
	MicroPwr	**MP2208A**	**3607**
LH2308	Intersil	LH2308	
LH2308A	**Intersil**	**LH2308A**	**3600,3601**
LH2310	Intersil	LH2310	
LH2311	Intersil	LH2311	
LH740A	AD	AD506	
		AD542	
LH740A	Burr-Brown	OPA506	
	National	LH0022	
		LM0052	
	TeledyneP	1424	
		1425	
LH741A	AMD	LM107	
	AD	**AD741S**	**3507**
	Burr-Brown	3500	
	LinearTech	LM107	
	National	LM107	
	PMI	PM741	
	Raytheon	RC741	
	SiliconG	SG107	
	TI	**LM107**	**718**
	ThomsonCSF	LM107	
LM0052	AD	AD506	
		AD542	
	Burr-Brown	OPA506	
	National	LH0022	
		LH740A	
	TeledyneP	1424	
		1425	
LM10	LinearTech	LM10	
	MCE	MCE-LM10	
◆LM101	AMD	LM101	
	AD	AD101	
	Fairchild	μA101	
	Intersil	AD101	
	LinearTech	LM101	
	Motorola	LM101	
	Raytheon	LM101	
	SiliconG	SG101	
	ThomsonCSF	LM101	
LM101A	LinearTech	LM101A	
	TI	LM101A	
LM104	SiliconG	SG104	
	ThomsonCSF	LM104	
LM105	AMD	LM105	
	Fairchild	μA105	
	Intersil	LM105	
	SiliconG	SG105	
	ThomsonCSF	LM105	
LM106	**TI**	**LM106**	**719**
LM107	AMD	LM107	
	AD	**AD741S**	**3507**
	Burr-Brown	3500	
	LinearTech	LM107	
	National	LH741A	
	PMI	PM741	
	Raytheon	RC741	
	SiliconG	SG107	
	TI	**LM107**	**718**
	ThomsonCSF	LM107	
LM108	AD	AD108	
	Fairchild	μA108	
	Harris	LM108	
	Intersil	**LM108**	**3600,3601**
	LinearTech	LM108	
	MicroPwr	**MP108**	**688,3607**
	Motorola	**LM108**	**3615**
	PMI	PM108	
	SGS	M108	
	SiliconSys	**SSI108**	**3736**
	TI	LM108	
LM109	Fairchild	μA109	
	IPS	**IP140-5**	**3599**
	Motorola	LM109	
	SiliconG	SG109	
	ThomsonCSF	SFC2109	
LM11	LinearTech	LM11	
	Motorola	**LM11**	**3616**
LM110	AMD	LM110	
LM111	AD	AD111	
	Fairchild	μA111	
	LinearTech	LM111	
	Motorola	**LM111**	**3631**
	Raytheon	LM111	
	Signetics	**LM111**	**3725**
	SiliconG	SG111	
	TI	**LM111**	**719**
	ThomsonCSF	LM111	
LM112	AMD	LM112	
LM113	AD	AD589	
	Ferranti	ZN423	
	Intersil	**ICL8069**	**3604**
	Maxim	ICL8069	
	MicroPwr	**MP5010**	**688,3607**
	National	LM313	
	TeledyneS	9491	
		T-SC9491	
LM117A	Motorola	LM117A	

(Continued)

◆ Discontinued

Bold face device numbers indicate manufacturers data is provided in the IC Master on the pages noted.

National Semiconductor (Cont'd)

Manufacturer Device	Replacement Source	Device	IC Master Page
LM118	Harris	LM118	
	LinearTech	LM118	
	TI	LM118	
LM119	LinearTech	LM119	
	Signetics	**LM119**	**3723**
LM120-08	SiliconG	SG120-08	
LM120-12	**IPS**	**IP120-12**	**3599**
	SiliconG	SG120-12	
LM120-15	**IPS**	**IP120-15**	**3599**
	SiliconG	SG120-15	
LM120-18	SiliconG	SG120-18	
LM120-20	SiliconG	SC120-20	
LM120-5	**IPS**	**IP120-5**	**3599**
LM123	Fairchild	SH123	
		UA138	
		μA123	
	IPS	**IP123**	**3599**
	LinearTech	LM123	
	Motorola	**LM123**	**3622**
		MC78T05	**3622**
	SiliconG	SG123	
LM124A	AMD	LM124A	
	LinearTech	LT1014	
	Motorola	LM124A	
	RCA	CA124A	
	Signetics	LM124A	
	SiliconG	SG124	
	TI	LM124A	
LM129	LinearTech	LM129	
LM1303	Exar	XR4739	
	Fairchild	μA739	
		μA749	
	Raytheon	RC4739	
	SGS	TBA231	
	TI	SN76131	
		SN76149	
LM1310	Exar	XR1310	
	TI	SN76115	
	Toshiba	TA7157	
LM133	LinearTech	LT1033	
	National	LM333	
LM134	LinearTech	LM134	
LM136	LinearTech	LM136	
LM13600	Exar	XR13600	
	PMI	LM13600	
LM137	**IPS**	**IP137**	**3599**
	LinearTech	LM137	
	MCE	MCE-LM137	
	Motorola	**LM137**	**3625**
	ThomsonCSF	LM137	
		TDC0137	
	Unitrode	UC137	
LM138	**IPS**	**IP138**	**3599**
	LinearTech	LM138	
	Micropac	MLM138	
LM139	Fairchild	μA139	
	Motorola	**LM139**	**3631**
	PMI	CMP-04	
		PM139	
	Raytheon	LM139	
	RCA	**CA139**	**3672,3677**
	Signetics	LM139	
	TI	**LM139**	**719**
LM1391	**Motorola**	**MC1391**	**3613**
	RCA	CA1391	
LM1394	**Motorola**	**MC1394**	**3613**
	RCA	CA1394	
LM139A	AMD	LM139A	
	Motorola	**LM139A**	**3631**
	PMI	CMP-04	
		PM139A	
	RCA	**CA139A**	**3672,3677**
	TI	**LM139A**	**719**
LM140	Exar	XR146	
LM140-05	SiliconG	SG140-05	
LM140-06	SiliconG	SC140-06	
LM140-08	SiliconG	SC140-08	
LM140-12	**IPS**	**IP140-12**	**3599**
	SiliconG	SG140-12	
LM140-15	**IPS**	**IP140-15**	**3599**
	SiliconG	SG140-15	
LM140-18	SiliconG	SC140-18	
LM140-20	SiliconG	SC140-20	
LM140-24	SiliconG	SC140-24	
LM140-5	**IPS**	**IP140-5**	**3599**
◆LM1408	AMD	AM1408	
		DAC-08	
		SSS1408	
	AD	AD1408	
◆LM1408	AD	ADDAC-08	
	Datel	DAC-08B	
		DAC-I8BC	
		DAC-IC8B	
		DAC-IC8BC	**3162**
	Fairchild	DAC-08	
		MA0802M	
		μA0801	
		μA0802	
	Hitachi	HA17408	
	Motorola	**DAC-08**	**3630**
		MC1408	
	National	DAC0801	
		DAC0802	
		DAC0806	
		DAC0807	
		DAC0808	
	NEC	μPC624	
	PMI	**DAC-08**	**3637,3639**
		DAC-1408	
	Raytheon	**DAC-08**	**3664**
	Signetics	MC1408	
LM1414	Motorola	MC1414	
	TI	TL514	
LM143	Datel	AM-464-2M	
	Exar	XR1527A	
	Harris	HA-2640	
		LM143	
	Motorola	**MC1536**	**3616**
	National	LM1536	
	SiliconG	SG143	
		SG1536	
LM1436	Datel	AM-464-2	
	Harris	HA-2645	
		LM343	
	Motorola	**MC1436**	**3616**
		MC1439	**3615**
	National	LM343	
	SiliconG	SG1436	
		SG343	
	TeledyneP	1332	
LM1458	Exar	XR4558	
	Fairchild	μA4558	
	Motorola	**MC4558**	**3617**
	Raytheon	RC4558	
	TI	RC4558	
◆LM146	Exar	XR146	
	National	LM140	
LM146-2	Raytheon	LM146-2	
LM148	LinearTech	LT1014	
	MicroPwr	OP11	
	PMI	OP11	
	Raytheon	LM148	
		RM4156	
		RM4158	
	TI	**LM148**	**719**
LM149	AMD	LM149	
LM1496	Fairchild	μA796	
	Motorola	MC1496	
	Plessey	SL1496	
	Signetics	**MC1496**	**3722**
	SiliconG	SG1496	
LM150	**IPS**	**IP150**	**3599**
	LinearTech	LM150	
	Motorola	**LM150**	**3625**
	SiliconG	SG150	
	Unitrode	UC150	
LM1514	Motorola	MC1514	
	TI	TL514	
LM1524	Cherry	CS1524	
	Exar	**XR1524**	**3558**
	IPS	**IP1524**	**3599**
	LinearTech	LT1524	
	RCA	CA1524	
	SGS	SG1524	
		UC1524A	
	SiliconG	SG1524	
	Sprague	ULS-8124	
	TI	**SG1524**	**720**
	Unitrode	**UC1524A**	**3739,3739**
LM1536	Datel	AM-464-2M	
	Exar	XR1527A	
	Harris	HA-2640	
		LM143	
	Motorola	**MC1536**	**3616**
	National	LM143	
	SiliconG	SG143	
		SG1536	
LM158A	LinearTech	LT1013	
	Motorola	**LM158**	**3617**
	Raytheon	RM4139	
LM158A	**RCA**	**CA158A**	**3672**
	Signetics	**LM158**	**3729**
	TI	**LM158**	**718**
LM1596	Motorola	MC1596	
	Signetics	MC1596	
	SiliconG	SG1596	
LM160	Fairchild	μA760	
	PMI	CMP-05	
LM1611	National	DS1611	
LM1612	National	DS1612	
LM1613	National	DS1613	
LM1614	National	DS1614	
LM163	National	DS1603	
LM1709	Fairchild	μA709	
	Hitachi	HA1303	
	Motorola	**MC1709**	**3615**
	National	LM709	
	NEC	μPC255	
		μPC55	
	RCA	**CA3038**	**3672**
	TI	μA709	
	ThomsonCSF	SFC2709	
	Toshiba	TA7502	
LM1800	Fairchild	μA705	
	Motorola	**MC1309**	**3614**
		MC1311	
	RCA	CA3145	
		CA3195	
	Sanyo	LA705	
		LA758	
	Signetics	**μA758**	**3727**
	Sprague	ULN-3809	
		ULN-3812	
	TI	SN76111	
		SN76116	
LM1820	TI	SN76635	
LM1829	National	LM3126	
	RCA	CA3126	
LM1848	RCA	CA3172	
LM185	LinearTech	LM185	
LM1870	**Signetics**	**LM1870**	**3727**
LM193A	**Motorola**	**LM193**	**3631**
	Signetics	**LM193**	**3725**
	TI	**LM193**	**719**
LM194	**MicroPwr**	**MPT-02A**	**3605**
	PMI	MAT-02	
LM196	Micropac	MLM196	
LM199	LinearTech	LM199	
LM199A	LinearTech	LM199A	
LM2002	National	LM2002A	
		LM383	
		LM383A	
	Sprague	ULN-3701	
		ULN-3702	
LM2002A	National	LM2002	
		LM383	
		LM383A	
	Sprague	ULN-3701	
		ULN-3702	
LM201A	TI	LM201A	
LM204	SiliconG	SG204	
	ThomsonCSF	LM204	
LM208A	AMD	LM208A	
	AD	AD208A	
	Fairchild	UA208A	
	MicroPwr	**MP208A**	**3607**
	Motorola	**LM208A**	**3615**
	PMI	PM208A	
		PM308A	
LM211	AD	AD211	
	Motorola	**LM211**	**3631**
	RCA	LM211	
	Signetics	**LM211**	**3725**
	SiliconG	SG211	
	TI	LM211	
	ThomsonCSF	LM211	
LM2111	**Motorola**	**MC1357**	**3613**
	National	LM2113	
	RCA	CA2111	
	Signetics	N5111	
	Sprague	ULN-2111	
	TI	SN76642	
		SN76643	
LM2113	**Motorola**	**MC1357**	**3613**
	National	LM2111	
	RCA	CA2111	
	Signetics	N5111	
	Sprague	ULN-2111	
	TI	SN76642	
		SN76643	
LM217	**IPS**	**IP217**	**3599**
	MCE	MCE-LM217	
LM217	**Motorola**	**LM217**	**3625**
	SiliconG	SG217	
	TI	LM217	
	ThomsonCSF	TDE0117	
	Unitrode	UC217	
LM218	TI	LM218	
	ThomsonCSF	TDE0118	
LM219	**Signetics**	**LM219**	**3725**
	ThomsonCSF	TDE0119	
LM220	Lambda	LLM220	
LM220-08	SiliconG	SC220-08	
LM220-12	**IPS**	**IP220-12**	**3599**
	SiliconG	SG220-12	
LM220-15	**IPS**	**IP220-15**	**3599**
	SiliconG	SG220-15	
LM220-18	SiliconG	SG220-18	
LM220-20	SiliconG	SG220-20	
LM220-05	SiliconG	SG220-05	
LM223	Fairchild	SH223	
		μA223	
	IPS	**IP223**	**3599**
	Lambda	LLM223	
	Motorola	**LM223**	**3622**
	SiliconG	SG223	
	ThomsonCSF	TDE0123	
LM234	LinearTech	LM234	
LM237	**IPS**	**IP237**	**3599**
	MCE	MCE-LM237	
	Motorola	**LM237**	**3625**
	TI	LM237	
	Unitrode	UC237	
LM239	Fairchild	UA250	
		UA26LS31	
		UA26LS32	
		μA239	
	Motorola	**LM239**	**3631**
	PMI	CMP-04	
		PM239	
	Raytheon	LM239	
	RCA	**CA239**	**3672,3677**
	Signetics	LM239	
	TI	LM239	
	ThomsonCSF	TDE0139	
LM239A	AMD	LM239A	
	Motorola	**LM239A**	**3631**
	PMI	CMP-04	
	RCA	**CA239A**	**3672,3677**
LM240-06	SiliconG	SG240-06	
LM240-08	SiliconG	SG240-08	
LM240-12	SiliconG	SG240-12	
LM240-15	SiliconG	SG240-15	
LM240-18	SiliconG	SG240-18	
LM240-20	SiliconG	SG240-20	
LM240-24	SiliconG	SG240-24	
LM246	Exar	XR246	
	ThomsonCSF	TDE0146	
◆LM246-2	Raytheon	LM246-2	
LM248	TI	LM248	
	ThomsonCSF	TDE0148	
LM250	**IPS**	**IP250**	**3599**
	Motorola	**LM250**	**3625**
	SiliconG	SG250	
	Unitrode	UC250	
LM258A	**Motorola**	**LM258**	**3617**
	RCA	**CA258A**	**3672**
	Signetics	**LM258**	**3729**
	TI	LM258	
	ThomsonCSF	TDE0158	
LM285	Motorola	LM285	
LM2900	Hitachi	HA17301	
	Motorola	**LM2900**	**3618**
		MC3301	**3618**
	National	LM3301	
	Raytheon	LM2900	
		RC3301	
	TI	LM2900	
LM2901	Cypress	CY7C901	
	Fairchild	μA2901	
		μA3302	
	Motorola	**LM2901**	**3631**
		MC3302	**3631**
	National	LM3302	
	NEC	μPC2901	
	PMI	CMP-04	
	Raytheon	LM2901	
		RC3302	
	RCA	CA3302	
	SGS	LM2901	
		MC3302	
	Signetics	**LM2901**	**3721,3722**
		MC3302	**3721**
	SiliconG	SG324A	

(Continued)

◆ Discontinued

The manufacturers report their devices can be used as direct replacements.
Performance details often differ, so compare the specifications considering your requirements.

National Semiconductor (Cont'd)

Manufacturer Device	Replacement Source	Device	IC Master Page
LM2901	TI	LM2901	
		LM3302	
	ThomsonCSF	LM2901	
LM2902	Fairchild	µA2902	
	Hitachi	HA17902	
	Motorola	**LM2902**	**3618**
	NEC	µPC2902	
	Raytheon	LM2902	
	SGS	LM2902	
	TI	LM2902	
	ThomsonCSF	LM2902	
LM2903	AD	AD311	
	Fairchild	µA311	
	LinearTech	LM311	
	Motorola	**LM2903**	**3631**
		LM311	**3631**
	National	LM311	
	NEC	µPC271	
		µPC311	
	Raytheon	LM311	
	RCA	**CA311**	**3672,3677**
		LM311	
	SGS	LM2903	
		LM311	
	Signetics	**LM2903**	**3725**
		LM311	**3721**
	SiliconG	SG311	
	TI	LM2903	
		LM311	
	ThomsonCSF	LM2903	
		LM311	
		SFC3111	
LM2907	Cherry	CS2907-D14	
LM2917	Cherry	CS2917	
	Exar	**XR2917**	**3552**
LM293	**Motorola**	**LM293**	**3631**
	Signetics	LM293	
	TI	LM293	
LM2930	SGS	LM2930	
LM2931	SGS	LM2931	
LM298	LinearTech	LF398	
	National	LF398	
	PMI	SMP-10	
	Signetics	**LF398**	**3725**
		NE5537	**3692,3720**
LM301	AD	AD301	
	Fairchild	µA301A	
	Intersil	AD301	
	LinearTech	LM301	
		LM301A	
	Motorola	LM301	
	National	LM301A	
	NEC	µPC157	
		µPC301	
	Raytheon	LM301	
	RCA	CA301	
		LM301	
	SiliconG	SG301	
	TI	LM301	
		LM301A	
	ThomsonCSF	LM301A	
	Toshiba	TA7506	
LM3011	Motorola	MC1590	
	RCA	CA3011	
		CA3012	
LM3018	**RCA**	**CA3018**	**3678**
	ThomsonCSF	SFC2018	
LM3019	**RCA**	**CA3019**	**3678**
LM301A	AD	AD301	
	Fairchild	µA301A	
	Intersil	AD301	
	LinearTech	LM301	
		LM301A	
	Motorola	LM301	
	National	LM301	
	NEC	µPC157	
		µPC301	
	Raytheon	LM301	
	RCA	CA301	
		LM301	
	SiliconG	SG301	
	TI	LM301	
		LM301A	
	ThomsonCSF	LM301A	
	Toshiba	TA7506	
LM304	NEC	µPC142	
	SiliconG	SG304	
	ThomsonCSF	LM304	
LM3045	Fairchild	UA3045	
	Plessey	SL3086	
	Sanyo	LA3045	
	Sprague	ULS-2045	
LM3046	Fairchild	UA3046	
	Motorola	**MC3346**	**3614**
	Plessey	SL3046	
		SL3146	
	RCA	**CA3046**	**3678**
		CA3146	**3678**
	Sanyo	LA3046	
	SGS	CA3046	
		TBA331	
	SiliconG	SG3046	
		SG3146	
		SG3821	
	Sprague	ULN-2046	
	ThomsonCSF	SFC	
LM3054	Fairchild	UA3054	
	Motorola	**CA3054**	**3614**
	RCA	**CA3054**	**3678**
	Sprague	ULN-2054	
	ThomsonCSF	SFC2054	
LM3064	Motorola	LM3065	
		M5140	
	RCA	CA3065	
	Sanyo	LA1365	
	TI	SN76666	
LM3066	TI	SN76266	
LM3072	RCA	CA3072	
LM3075	RCA	CA3075	
	TI	SN76675	
LM308	AD	AD308	
	Burr-Brown	3500	
		3501	
	Fairchild	µA308	
	Intersil	AD308	
		LM308	**3600,3601**
	MicroPwr	**MP308**	**3607**
	Motorola	**LM308**	**3615**
	Raytheon	LM308	
LM3086	Fairchild	UA3086	
	Motorola	**MC3386**	**3614**
	Plessey	SL3086	
	RCA	**CA3086**	**3678**
	Sanyo	LA3086	
	SiliconG	SG3086	
		SG3886	
	Sprague	ULN-2086	
	ThomsonCSF	SFC2086	
LM308A	AMD	LM308A	
	AD	AD308A	
	Fairchild	UA308A	
	Harris	LM308A	
	LinearTech	LM308A	
	MicroPwr	**MP308A**	**3607**
	Motorola	**LM308A**	**3615**
LM311	AD	AD311	
	Fairchild	µA311	
	LinearTech	LM311	
	Motorola	**LM2903**	**3631**
		LM311	**3631**
	National	LM2903	
	NEC	µPC271	
		µPC311	
	Raytheon	LM311	
	RCA	**CA311**	**3672,3677**
		LM311	
	SGS	LM2903	
		LM311	
	Signetics	**LM2903**	**3725**
		LM311	**3721**
	SiliconG	SG311	
	TI	LM2903	
		LM311	
	ThomsonCSF	LM2903	
		LM311	
		SFC3111	
LM3126	National	LM1829	
	RCA	CA3126	
LM313	AD	AD589	
	Ferranti	ZN423	
	Intersil	**ICL8069**	**3604**
	Maxim	ICL8069	
	MicroPwr	**MP5010**	**688,3607**
	National	LM113	
	TeledyneS	9491	
		T-SC9491	
LM317	Fairchild	µA317	
	IPS	**IP317**	**3599**
	LinearTech	LM317	
	MCE	MCE-LM317	
		(Continued)	
LM317	**Motorola**	**LM317**	**3625**
	SGS	LM317	
	SiliconG	SG317	
	TI	LM317	
	ThomsonCSF	LM317	
		TDB0117	
	Unitrode	UC317	
LM317M	**Motorola**	**LM317M**	**3625**
LM318	AD	AD518	
	Harris	LM318	
	LinearTech	LM318	
	NEC	µPC159	
	TI	LM318	
	ThomsonCSF	LM318	
		TDB0118	
LM320	Lambda	LLM320	
LM320-08	SiliconG	SG320-08	
LM320-15	Fairchild	µA7915	
	IPS	**IP320-15**	**3599**
		IP7915	**3599**
	Motorola	MC7915	
	National	LM320T15	
		LM7915	
	NEC	µPC7915	
	SGS	L7915	
	SiliconG	SG320-15	
		SG7915	
	TI	LM320-5	
		µA7915	
	ThomsonCSF	µA7915	
	Samsung	MC7915	
	Unitrode	UC7915	
LM320-18	SiliconG	SG320-18	
LM320-20	SiliconG	SG320-20	
LM320-5	**IPS**	**IP120-5**	**3599**
	Motorola	MC7952	
	SGS	L7952	
	SiliconG	SG320-5	
	TI	LM320-5	
	ThomsonCSF	TDB2905	
	SiliconG	SG320-5	
LM320MP12	Fairchild	µA7912	
		µA79M12	
	IPS	**IP320-12**	**3599**
		IP7912	**3599**
	Motorola	MC7912	
	National	LM7912	
		LM79M12	
	NEC	µPC7912	
	SGS	L7912	
	SiliconG	SG320P-12	
		SG7912	
	TI	LM320-12	
		µA7912	
	ThomsonCSF	µA7912	
	Samsung	MC7912	
	Unitrode	UC7912	
LM320MP5	Fairchild	µA7905	
		µA79M05	
	IPS	**IP120-5**	**3599**
		IP320-5	**3599**
		IP7905	**3599**
	Lambda	LµA7905	
	National	LM7905	
		LM79M05	
	NEC	µPC7905	
	SiliconG	SG120-5	
		SG320-05	
		SG320P-5	
	TI	µA7905	
	Unitrode	UC7905	
LM320T15	Fairchild	µA7915	
	IPS	**IP320-15**	**3599**
		IP7915	**3599**
	Motorola	MC7915	
	National	LM320-15	
		LM7915	
	NEC	µPC7915	
	SGS	L7915	
	SiliconG	SG320-15	
		SG7915	
	TI	LM320-5	
		µA7915	
	ThomsonCSF	µA7915	
	Samsung	MC7915	
	Unitrode	UC7915	
LM323A	SiliconG	SG323A	
LM324	SGS	LM324	
	ThomsonCSF	LM324	
	Samsung	**LM324**	**3679**
LM324A	SGS	LM324A	
	TI	LM324A	
	Samsung	**LM324A**	**3679**
LM329	LinearTech	LM329	
LM3301	Hitachi	HA17301	
	Motorola	**LM2900**	**3618**
		MC3301	**3618**
	National	LM2900	
	Raytheon	LM2900	
		RC3301	
	TI	LM2900	
LM3302	Cypress	CY7C901	
	Fairchild	µA2901	
		µA3302	
	Motorola	**LM2901**	**3631**
		MC3302	**3631**
	National	LM2901	
	NEC	µPC2901	
	PMI	CMP-04	
	Raytheon	LM2901	
		RC3302	
	RCA	CA3302	
	SGS	LM2901	
		MC3302	
	Signetics	**LM2901**	**3721,3722**
		MC3302	**3721**
	SiliconG	SG324A	
	TI	LM2901	
		LM3302	
	ThomsonCSF	LM2901	
LM333	LinearTech	LT1033	
	National	LM133	
LM334	LinearTech	LM334	
LM336	LinearTech	LM336	
LM337	**IPS**	**IP337**	**3599**
	LinearTech	LM337	
	MCE	MCE-LM337	
	Motorola	**LM337**	**3625**
	SiliconG	SG337	
	TI	LM337	
	ThomsonCSF	TDB0137	
	Unitrode	UC337	
LM337HV	SiliconG	SG337HV	
LM338	**IPS**	**IP338**	**3599**
	LinearTech	LM338	
	Micropac	MLM338	
LM339	AMD	LM339A	
	Fairchild	µA339	
	Hitachi	HA17901	
	Motorola	**LM339**	**3631**
	NEC	µPC339	
	PMI	CMP-04	
		PM339A	
	Raytheon	LM339	
	RCA	**CA339**	**3672,3677**
		CA339A	**3672,3677**
		LM339	
	SGS	LM339	
	TI	LM339	
	ThomsonCSF	LM339	
		TDB0139	
LM340	Lambda	LLM340	
◆LM340-10	TI	LM340-10	
LM340-15	Fairchild	µA7815	
		µA78L15	
	IPS	**IP140-15**	**3599**
		IP340-15	**3599**
		IP7815	**3599**
	Lambda	LAS1515	
		LMC7815	
		LµA7815	
	Motorola	**MC7815**	**3624**
		MC78L15	
	National	LM340LA-15	
		LM340T-15	
		LM7815	
		LM78L15	
	NEC	µPC7815	
		µPC78L15	
	SGS	L7815	
	SiliconG	SG340-15	
		SG7815	
	TI	LM340-15	
		µA7815	
		µA78L15	
	ThomsonCSF	µA7815	
	Toshiba	TA78015	
	Samsung	MC7815	
	Unitrode	UC7815	
LM340-20	SiliconG	SG340-20	
LM340-24	SiliconG	SG340-24	

◆ Discontinued

Bold face device numbers indicate manufacturers data is provided in the IC Master on the pages noted.

ALTERNATE SOURCE DIRECTORY

National Semiconductor (Cont'd)

Manufacturer Device	Replacement Source	Device	IC Master Page
LM340-5	**IPS**	**IP7805**	**3599**
	SiliconG	SG7805	
	Samsung	MC7805	
	Unitrode	UC7805	
LM3401	**Motorola**	**MC3401**	**3618**
	National	LM3900	
	Raytheon	LM3900	
		RC3401	
	RCA	**CA3401**	**3674**
	TI	LM3900	
LM340LA-12	Fairchild	μA78L12	
	Motorola	MC78L12	
	National	LM78L12	
	NEC	μPC78L12	
	TI	μA78L12	
	ThomsonCSF	SFC2812	
		μA7812	
LM340LA-15	Fairchild	μA7815	
		μA78L15	
	IPS	**IP140-15**	**3599**
		IP340-15	**3599**
		IP7815	**3599**
	Lambda	LAS1515	
		LMC7815	
		LμA7815	
	Motorola	**MC7815**	**3624**
		MC78L15	
	National	LM340-15	
		LM340T-15	
		LM7815	
		LM78L15	
	NEC	μPC7815	
		μPC78L15	
	SGS	L7815	
	SiliconG	SG340-15	
		SG7815	
	TI	LM340-15	
		μA7815	
		μA78L15	
	ThomsonCSF	μA7815	
	Toshiba	TA78015	
	Samsung	MC7815	
	Unitrode	UC7815	
LM340LA-5	Fairchild	μA78L05	
	Motorola	MC78L05	
	National	LM78L05	
	NEC	μPC78L05	
	TI	μA78L05	
	ThomsonCSF	μA7805	
LM340T-15	Fairchild	μA7815	
		μA78L15	
	IPS	**IP140-15**	**3599**
		IP340-15	**3599**
		IP7815	**3599**
	Lambda	LAS1515	
		LMC7815	
		LμA7815	
	Motorola	**MC7815**	**3624**
		MC78L15	
	National	LM340-15	
		LM340LA-15	
		LM7815	
		LM78L15	
	NEC	μPC7815	
		μPC78L15	
	SGS	L7815	
	SiliconG	SG340-15	
		SG7815	
	TI	LM340-15	
		μA7815	
		μA78L15	
	ThomsonCSF	μA7815	
	Toshiba	TA78015	
	Samsung	MC7815	
	Unitrode	UC7815	
LM341-12	Fairchild	μA78M12	
	Motorola	MC78M12	
	National	LM342-12	
		LM78M12	
	NEC	μPC78M12	
	Sanyo	L78M12	
	SGS	L78M12CV	
	Samsung	MC78M12	
LM341-15	Fairchild	μA78M15	
	Motorola	MC78M15	
	National	LM342-15	
		LM78M15	
	NEC	μPC78M15	
	Sanyo	L78M15	
LM341-15	SGS	L78M15CV	
	Samsung	MC78M15	
LM341-5	Fairchild	μA78M05	
	Motorola	MC78M05	
	National	LM342-05	
		LM78M05	
	NEC	μPC78M05	
	Sanyo	L78M05	
	SGS	L78M05CV	
	TI	μA78M05	
	Samsung	MC78M05	
LM342-05	Fairchild	μA78M05	
	Motorola	MC78M05	
	National	LM341-5	
		LM78M05	
	NEC	μPC78M05	
	Sanyo	L78M05	
	SGS	L78M05CV	
	TI	μA78M05	
	Samsung	MC78M05	
LM342-12	Fairchild	μA78M12	
	Motorola	MC78M12	
	National	LM341-12	
		LM78M12	
	NEC	μPC78M12	
	Sanyo	L78M12	
	SGS	L78M12CV	
	Samsung	MC78M12	
LM342-15	Fairchild	μA78M15	
	Motorola	MC78M15	
	National	LM341-15	
		LM78M15	
	NEC	μPC78M15	
	Sanyo	L78M15	
	SGS	L78M15CV	
	Samsung	MC78M15	
LM343	Datel	AM-464-2	
	Harris	HA-2645	
		LM343	
	Motorola	**MC1436**	**3616**
		MC1439	**3615**
	National	LM1436	
	SiliconG	SG1436	
		SG343	
	TeledyneP	1332	
LM346	Exar	XR346	
	Harris	HA2740	
	ThomsonCSF	LM346	
◆LM346-2	Raytheon	LM346-2	
LM348	Exar	XR4751	
	Intersil	LM348	
	Motorola	**MC4741**	**3618**
	Raytheon	HA4741	
LM350	Fairchild	μA78HGA	
	IPS	**IP350**	**3599**
	Lambda	LAS14U	
		LAS19U	
	LinearTech	LM350	
	Motorola	**LM350**	**3625**
	SiliconG	SG350	
	TI	LM350	
◆LM351	Fairchild	75453	
	Motorola	MC75453	
	National	DS75453	
		LM75453	
	SiliconG	SG75453	
	TI	SN75453B	
LM3524	Cherry	CS3524	
	Exar	**XR3524**	**3558**
	IPS	**IP3524**	**3599**
		IP3524B	**3599**
	RCA	CA3524	
	SGS	SG3524	
		UC3524A	
	Signetics	**SG3524**	**3715.3720.3730**
	SiliconG	SG3524B	
	Sprague	ULN-8124	
	TI	SG3524	
	Unitrode	**UC3524A**	**3739.3739**
◆LM354	ThomsonCSF	SFC2524	
		SFC2525	
LM358A	**Motorola**	**LM358**	**3617**
	NEC	μPC358	
	RCA	**CA358A**	**3672**
		LM358	
	Sanyo	LA6358	
	SGS	LM358	
	Signetics	**LM358**	**3722,3729**
		NE532	**3729**
LM358A	TI	LM358	
	ThomsonCSF	LM358	
LM361	PMI	CMP-05	
	Signetics	**NE529**	**3723**
LM3611	National	DS3611	
	Sprague	UDN-3611	
	TI	SN75471	
LM3612	National	DS3612	
		DS3632	
	Sprague	UDN-3612	
	TI	SN75472	
LM3613	National	DS3613	
	Sprague	UDN-3613	
	TI	SN75473	
LM3614	National	DS3614	
	Sprague	UDN-3614	
	TI	SN75474	
LM376	Fairchild	μA376	
LM377	TI	SN76177	
LM380	Sprague	ULN-2280	
LM383	National	LM2002	
		LM2002A	
		LM383A	
	Sprague	ULN-3701	
		ULN-3702	
LM383A	National	LM2002	
		LM2002A	
		LM383	
	Sprague	ULN-3701	
		ULN-3702	
LM384	Sprague	ULN-3784	
LM385	LinearTech	LM385	
	Motorola	LM385	
LM386	MCE	MCE-386	
LM3900	**Motorola**	**MC3401**	**3618**
	National	LM3401	
	Raytheon	LM3900	
		RC3401	
	RCA	**CA3401**	**3674**
	TI	LM3900	
LM3911	NEC	μPC3911	
◆LM3914	TI	LM3914	
◆LM3915	TI	LM3915	
LM393	SGS	LM393	
LM396	Micropac	MLM396	
LM399	LinearTech	LM399	
LM399A	LinearTech	LM399A	
LM4250	Harris	HA-2720	
	Intersil	ICL7611	
		ICL8021	
		LM4250	
	Maxim	ICL7611	
	Motorola	**MC1776**	**3616**
	National	LF441	
	PMI	OP20	
		OP21	
		OP22	
	SGS	MC1776	
	Solitron	UC4250	
	TI	TLC251	
		TLC271	
	ThomsonCSF	μA776	
LM4500	Motorola	TCA4500	
	Siemens	TCA4500	
LM55107A	Motorola	MC55107	
	National	DS55107	
	TI	**SN55107A**	**721**
		SN55107B	**721**
LM55108A	Fairchild	55108	
	Motorola	MC55108	
	National	DS55108	
	TI	**SN55108A**	**721**
		SN55108B	**721**
LM5520	TI	SN5520	
LM5522	Motorola	MC5522	
		MC5523	
	TI	SN5522	
LM5524	Fairchild	MC5524	
	Motorola	MC5524	
	Raytheon	RM5524	
	TI	SN5524	
LM5525	Fairchild	MC5525	
	Motorola	MC5525	
LM5528	Fairchild	MC5528	
	Motorola	MC5528	
LM5529	Fairchild	MC5529	
	Motorola	MC5529	
LM5534	Fairchild	MC5534	
	Motorola	MC5534	
LM5535	Motorola	MC5535	
LM5539	Motorola	MC5539	
◆LM55450	Signetics	55450	
	SiliconG	SG55450	
	TI	SN55450	
◆LM55451	Fairchild	55451	
	National	DS55451	
	Signetics	55451	
	SiliconG	SG55451	
	TI	SN55451	
◆LM55452	National	DS55452	
	Signetics	55452	
	SiliconG	SG55452	
	TI	SN55452	
LM55453	Fairchild	55453	
	National	DS55453	
	Signetics	55453	
	SiliconG	SG55453	
	TI	SN55453	
◆LM55454	National	DS55454	
	Signetics	55454	
	SiliconG	SG55454	
	TI	SN55454	
LM565	**Signetics**	**NE565**	**3722**
		SE565	**3728**
LM566	**Signetics**	**NE566**	**3723**
		SE566	**3723**
LM567	Exar	XR2567	
		XR567	
	MCE	MCE-567	
	Signetics	**NE567**	**3720**
		SE567	**3728**
	Samsung	LM567	
LM709	Fairchild	μA709	
	Hitachi	HA1303	
	Motorola	**MC1709**	**3615**
	National	LM1709	
	NEC	μPC255	
		μPC55	
	RCA	**CA3038**	**3672**
	TI	μA709	
	ThomsonCSF	SFC2709	
	Toshiba	TA7502	
LM723	Fairchild	μA723	
	Hitachi	HA17723	
	Intersil	LM723	
	Motorola	**MC1723**	**3625**
	Raytheon	RC723	
		RM723	
	RCA	CA723	
		LM723	
	SGS	L123	
		LM723	
	Signetics	**μA723**	**3721,3730**
	SiliconG	SG723	
	TI	μA723	
	ThomsonCSF	LM723	
LM725	AMD	SSS725	
	Fairchild	μA725	
	PMI	OP06	
	Raytheon	RM725	
LM733	Fairchild	μA733	
	Hitachi	HA17733	
	Intersil	μA733	
	Motorola	**MC1733**	**3616**
		NE592	
	Signetics	**μA733**	**3721,3729**
	TI	μA733	
LM741	MicroPwr	MPOP02	
	Plessey	SL562	
	PMI	**OP-02**	**3636**
	SGS	LM741	
		LS141	
	ThomsonCSF	μA741	
	Samsung	LM741	
LM747	AMD	747	
	Fairchild	μA747	
	Hitachi	HA17747	
	MicroPwr	MPOP04	
	Motorola	**MC1747**	**3617**
	NEC	μPC251	
	PMI	**OP-04**	**3636**
		PM747	
	Raytheon	RC747	
		RM747	
	RCA	**CA747**	**3672**
	Signetics	**μA747**	**3721**
	TeledyneS	747	
	TI	μA747	
LM748	SGS	LM748	
		LS148	
	SiliconG	SG201	
	TI	LM201	
		SN72748P	

(Continued)

◆ Discontinued

The manufacturers report their devices can be used as direct replacements.
Performance details often differ, so compare the specifications considering your requirements.

National Semiconductor (Cont'd)

Manufacturer Device	Replacement Source	Device	IC Master Page
LM748	TI	μA748	
	ThomsonCSF	LM201	
		LM748	
LM75107A	Fairchild	75107	
	Motorola	**MC75107**	**3211**
	National	DS75107	
	TI	SN75107B	
LM75108A	Fairchild	75108	
	Motorola	**MC75108**	**3211**
	National	DS75108	
	TI	SN75108B	
LM75110	Fairchild	75110	
	Motorola	MC75110	
	TI	SN75110A	
◆LM7520	Fairchild	7520	
	Motorola	MC7520	
	TI	SN7520	
LM7521	Fairchild	7521	
	Motorola	MC7521	
	TI	SN7521	
◆LM7522	Motorola	MC7522	
	TI	SN7522	
LM7523	Motorola	MC7523	
	Raytheon	RC7523	
	TI	SN7523	
◆LM7524	Fairchild	75S24	
	Motorola	MC7524	
	National	DS75S24	
	Signetics	7524	
	TI	SN75224	
		SN7524	
LM7525	Fairchild	7525	
	Motorola	MC7525	
◆LM7528	Motorola	MC7528	
	Raytheon	RC7528	
	TI	SN7528	
	ThomsonCSF	SFC2528	
LM7529	Fairchild	7529	
	Motorola	MC7529	
	Raytheon	RC7529	
◆LM75324	National	DS75324	
	TI	SN75324	
◆LM7534	Motorola	MC7534	
LM7535	Motorola	MC7535	
LM7538	Fairchild	7538	
	Motorola	MC7538	
LM7539	Fairchild	7539	
	Motorola	MC7539	
◆LM75450	Fairchild	75450	
	National	DS75450	
	SiliconG	SG75450	
◆LM75451	Fairchild	75451	
	National	DS75451	
	SiliconG	SG75451	
◆LM75452	Fairchild	75452	
	National	DS75452	
	SiliconG	SG75452	
	TI	SN75452B	
LM75453	Fairchild	75453	
	Motorola	MC75453	
	National	DS75453	
	SiliconG	SG75453	
	TI	SN75453B	
◆LM75454	National	DS75454	
	SiliconG	SG75454	
	TI	SN75454B	
LM7812	Fairchild	μA7812	
	IPS	**IP140-12**	**3599**
		IP340-12	**3599**
		IP7812	**3599**
	Lambda	LMC7812	
		LμA7812	
	Motorola	**MC7812**	**3623**
	NEC	μPC7812	
	SGS	L7812	
	SiliconG	SG340-12	
		SG7812	
	TI	μA7812	
	Toshiba	TA78012	
	Samsung	MC7812	
	Unitrode	UC7812	
LM7815	Fairchild	μA7815	
		μA78L15	
	IPS	**IP140-15**	**3599**
		IP340-15	**3599**
		IP7815	**3599**
	Lambda	LAS1515	
		LMC7815	
		LμA7815	
LM7815	**Motorola**	**MC7815**	**3624**
		MC78L15	
	National	LM340-15	
		LM340LA-15	
		LM340T-15	
		LM78L15	
	NEC	μPC7815	
		μPC78L15	
	SGS	L7815	
	SiliconG	SG340-15	
		SG7815	
	TI	LM340-15	
		μA7815	
		μA78L15	
	ThomsonCSF	μA7815	
	Toshiba	TA78015	
	Samsung	MC7815	
	Unitrode	UC7815	
LM78L05	Fairchild	μA78L05	
	Motorola	MC78L05	
	National	LM340LA-5	
	NEC	μPC78L05	
	TI	μA78L05	
	ThomsonCSF	μA7805	
LM78L12	Fairchild	μA78L12	
	Motorola	MC78L12	
	National	LM340LA-12	
	NEC	μPC78L12	
	TI	μA78L12	
	ThomsonCSF	SFC2812	
		μA7812	
LM78L15	Fairchild	μA7815	
		μA78L15	
	IPS	**IP140-15**	**3599**
		IP340-15	**3599**
		IP7815	**3599**
	Lambda	LAS1515	
		LMC7815	
		LμA7815	
	Motorola	**MC7815**	**3624**
		MC78L15	
	National	LM340-15	
		LM340LA-15	
		LM340T-15	
		LM7815	
	NEC	μPC7815	
		μPC78L15	
	SGS	L7815	
	SiliconG	SG340-15	
		SG7815	
	TI	LM340-15	
		μA7815	
		μA78L15	
	ThomsonCSF	μA7815	
	Toshiba	TA78015	
	Samsung	MC7815	
	Unitrode	UC7815	
LM78M05	Fairchild	μA78M05	
	Motorola	MC78M05	
	National	LM341-5	
		LM342-05	
	NEC	μPC78M05	
	Sanyo	L78M05	
	SGS	L78M05CV	
	TI	μA78M05	
	Samsung	MC78M05	
LM78M12	Fairchild	μA78M12	
	Motorola	MC78M12	
	National	LM341-12	
		LM342-12	
	NEC	μPC78M12	
	Sanyo	L78M12	
	SGS	L78M12CV	
	Samsung	MC78M12	
LM78M15	Fairchild	μA78M15	
	Motorola	MC78M15	
	National	LM341-15	
		LM342-15	
	NEC	μPC78M15	
	Sanyo	L78M15	
	SGS	L78M15CV	
	Samsung	MC78M15	
◆LM78M18	Motorola	MC78M18	
	Sanyo	L78M18	
	Samsung	MC78M18	
◆LM78M24	Fairchild	μA78M24	
	Motorola	MC78M24	
	Sanyo	L78M24	
	SGS	L78M24CV	
	TI	μA78M24	
	Samsung	MC78M24	
LM7905	Fairchild	μA7905	
		μA79M05	
	IPS	**IP120-5**	**3599**
		IP320-5	**3599**
		IP7905	**3599**
	Lambda	LμA7905	
	National	LM320MP5	
		LM79M05	
	NEC	μPC7905	
	SiliconG	SG120-5	
		SG320-05	
		SG320P-5	
	TI	μA7905	
	Unitrode	UC7905	
LM7912	Fairchild	μA7912	
		μA79M12	
	IPS	**IP320-12**	**3599**
		IP7912	**3599**
	Motorola	MC7912	
	National	LM320MP12	
		LM79M12	
	NEC	μPC7912	
	SGS	L7912	
	SiliconG	SG320P-12	
		SG7912	
	TI	LM320-12	
		μA7912	
	ThomsonCSF	μA7912	
	Samsung	MC7912	
	Unitrode	UC7912	
LM7915	Fairchild	μA7915	
	IPS	**IP320-15**	**3599**
		IP7915	**3599**
	Motorola	MC7915	
	National	LM320-15	
		LM320T15	
	NEC	μPC7915	
	SGS	L7915	
	SiliconG	SG320-15	
		SG7915	
	TI	LM320-5	
		μA7915	
	ThomsonCSF	μA7915	
	Samsung	MC7915	
	Unitrode	UC7915	
LM79M05	Fairchild	μA7905	
		μA79M05	
	IPS	**IP120-5**	**3599**
		IP320-5	**3599**
		IP7905	**3599**
	Lambda	LμA7905	
	National	LM320MP5	
		LM7905	
	NEC	μPC7905	
	SiliconG	SG120-5	
		SG320-05	
		SG320P-5	
	TI	μA7905	
	Unitrode	UC7905	
LM79M12	Fairchild	μA7912	
		μA79M12	
	IPS	**IP320-12**	**3599**
		IP7912	**3599**
	Motorola	MC7912	
	National	LM320MP12	
		LM7912	
	NEC	μPC7912	
	SGS	L7912	
	SiliconG	SG320P-12	
		SG7912	
	TI	LM320-12	
		μA7912	
	ThomsonCSF	μA7912	
	Samsung	MC7912	
	Unitrode	UC7912	
MC1508	AD	AD1508	
	Datel	DAC-IC8BM	
	Motorola	MC1508	
	PMI	DAC-1508	
	Signetics	MC1508	
		SE5008	
		SE5009	
◆MCA1300	Motorola	MCA1300	
MCA500	Motorola	MCA500	
◆MF10	Harris	HF-10	
	Maxim	MF10	
MH0025	National	DS0025	
MH0056	National	DS0056	
MH8808	National	DS8808	
MM1702	AMD	AM1702A	
MM2102A	Fairchild	2102H	
	Panasonic	MN2102	
MM2147	Cypress	CY2147	
		CY7C147	
	Hitachi	HM6147	
	Intel	2141	
		2147	
		2147-3	
	Motorola	MCM6147	
		MCM61L47	
	National	NMC2141	
	NEC	MPD2147	
	OKI	MSM5104	
	TI	TMS2147	
	Toshiba	TMM3150	
	UMC	UM2147	
MM2532	Hitachi	HN462532	
	National	NMC2532	
		TDA2530	
		TDA2532	
	Plessey	TDA2530	
	Siemens	TDA2530	
	SiliconG	SG2532	
MM2716	Hitachi	HN462716	
	OKI	MSM2716	
	SGS	M2716	
	ThomsonCSF	ET2716	
MM2716M	Intel	M2716	
MM2732	AMD	AM2732	
	Hitachi	HN462732	
	Intel	2732	
		2732A	
		M2732	
	National	NMC2732	
	Rockwell	R27C32	
	SGS	M2732A	
	Toshiba	TMM324C	
◆MM450	Intersil	MM450	
◆MM451	Intersil	MM451	
◆MM452	Intersil	MM452	
◆MM455	Intersil	MM455	
MM52164	AMD	9264	
	GI	R03-9364	
	GouldAMI	S68A364	
	Hitachi	HN48364	
	Intech	IM7364	
	MicroPwr	MP2364C	
	Mitsubishi	M58334	
	Mostek	MK36000	
	Motorola	**MCM68364**	**4120**
		MCM68365	**4120**
		MCM68366	**4120**
	NEC	UPD2364	
	Rockwell	R2364A	
	SGS	M2362	
		M36000	
	Signetics	2664	
		26S64	
	SSS	SCM23C64	
	SMC	ROM36000	
	Synertek	SY2364/A	
	TI	TMS4764	
	Toshiba	TMM2366	
MM52264	AMD	AM9265	
	Fairchild	F3568	
		F3569	
		F3570	
	GI	R03-9365	
		R09864	
	GouldAMI	S2364	
		S6364	
	GTEMicro	G5364	
	Hitachi	HN61364	
	Intel	2364A	
	Mitsubishi	M5M2364	
		M5M2365	
		M5M23C64	
	Mostek	MK37000	
	Motorola	MCM68369	
		MCM68370	
	National	NM52264	
	OKI	**MSM3864**	**4733**
	Panasonic	MN2364	
		MN4864	
	RCA	**CDM5365**	**1673,1677**
	Rockwell	R2364B	
	SSS	SCM23C65	
	Supertex	23SC64	
		23SC64/A	
		CM6400	
	Synertek	SY2365/A	
	TI	TMS2364	
		TMS4764	

(Continued)

◆ Discontinued

Bold face device numbers indicate manufacturers data is provided in the IC Master on the pages noted.

National Semiconductor (Cont'd)

Manufacturer Device	Replacement Source	Device	IC Master Page
MM52264	Toshiba	TMM2365	
	UMC	UM2366	
	VTI	VT2365	
MM5280	Panasonic	MN1001	
MM5450	SGS	M5450	
MM5451	SGS	M5451	
MM5453	Motorola	MC145453	
MM5480	SGS	M5480	
MM5481	SGS	M5481	
		SG2525A	
	SiliconG	SG2525A	
MM54C04	Fairchild	F4069	
	Motorola	MC14069	
	National	CD4069	
		MM74C04	
	OKI	MSM4069	
	RCA	CD4069	
	Sanyo	LC4069	
	SGS	HCC/HCF4069	
	Signetics	HEF4069	
	Solitron	CM4069	
	SSS	SCL4069	
		SCL4449	
	Toshiba	TC4069	
MM54C14	Fairchild	F40014	
	Motorola	MC14584	
	National	CD40106	
		CD4584	
		MM74C14	
	RCA	CD40106	
	SGS	HCC/HCF40106	
	Signetics	HEF40106	
	SSS	SCL4584	
MM54C173	Fairchild	F4076	
	Motorola	MC14076	
	National	CD4076	
		MM74C173	
	RCA	CD4076	
	SGS	HCC/HCF4076	
	Signetics	HEF4076	
	Solitron	CM4076	
	SSS	SCL4076	
	Toshiba	TC4076	
MM54C175	Fairchild	F40175	
	Motorola	MC14175	
	National	CD40175	
		MM74C175	
	Signetics	HEF40175	
	Toshiba	TC40175	
MM54C192	Fairchild	F40192	
	National	MM74C192	
MM54C193	Fairchild	F40193	
	National	CD40193	
		MM74C193	
	RCA	CD40193	
	SGS	HCC/HCF40193	
	Signetics	HEF40193	
	SSS	SCL4193	
	Toshiba	**TC40193**	**1363**
MM54GC393	**Motorola**	**MC54HC393**	**1127**
	RCA	**CD54HC393**	**1150**
	Signetics	54HC393	
	TI	**SN54HC393**	**714**
MM54HC00	**Motorola**	**MC54HC00**	**1122**
	RCA	**CD54HC00**	**1149**
	Signetics	54HC00	
	SSS	SS54HC00	
MM54HC02	**Motorola**	**MC54HC02**	**1122**
	RCA	**CD54HC02**	**1149**
	Signetics	54HC02	
MM54HC04	**Motorola**	**MC54HC04**	**1124**
	RCA	**CD54HC04**	**1149**
	Signetics	54HC04	
MM54HC08	**Motorola**	**MC54HC08**	**1122**
	RCA	**CD54HC08**	**1149**
	Signetics	54HC08	
	TI	**SN54HC08**	**714**
MM54HC10	**Motorola**	**MC54HC10**	**1122**
	RCA	**CD54HC10**	**1149**
	Signetics	54HC10	
	TI	**SN54HC10**	**714**
MM54HC107	**Motorola**	**MC54HC107**	**1126**
	RCA	**CD54HC107**	**1149**
	Signetics	54HC107	
	TI	**SN54HC107**	**714**
MM54HC109	**Motorola**	**MC54HC109**	**1126**
	RCA	**CD54HC109**	**1149**
	Signetics	54HC109	
	TI	**SN54HC109**	**714**

Manufacturer Device	Replacement Source	Device	IC Master Page
MM54HC11	**Motorola**	**MC54HC11**	**1122**
	RCA	**CD54HC11**	**1149**
	Signetics	54HC11	
	TI	**SN54HC11**	**714**
MM54HC112	**Motorola**	**MC54HC112**	**1126**
	RCA	**CD54HC112**	**1149**
	Signetics	54HC112	
	TI	**SN54HC112**	**714**
MM54HC123	Motorola	MC54HC123	
	RCA	**CD54HC123**	**1150**
	Signetics	54HC123	
MM54HC132	**Motorola**	**MC54HC132**	**1125**
	RCA	**CD54HC132**	**1149**
	Signetics	54HC132	
MM54HC133	**Motorola**	**MC54HC133**	**1122**
	RCA	**CD74HC123**	**1150**
	Signetics	54HC133	
	TI	**SN54HC133**	**714**
MM54HC137	Motorola	MC54HC137	
	RCA	**CD54HC137**	**1150**
	SSS	SN54HC137	
		SS54HC137	
	TI	**SN54HC137**	**714**
MM54HC138	**Motorola**	**MC54HC138**	**1130**
	RCA	**CD54HC138**	**1150**
	Signetics	54HC138	
	SSS	SS54HC138	
	TI	**SN54HC138**	**714**
MM54HC139	**Motorola**	**MC54HC139**	**1130**
	RCA	**CD54HC139**	**1150**
	Signetics	54HC139	
	SSS	SS54HC139	
	TI	**SN54HC139**	**714**
MM54HC14	**Motorola**	**MC54HC14**	**1125**
	RCA	**CD54HC14**	**1149**
	Signetics	54HC14	
	TI	**SN54HC14**	**714**
MM54HC147	**Motorola**	**MC54HC147**	**1131**
	RCA	**CD54HC147**	**1150**
	Signetics	54HC147	
MM54HC151	**Motorola**	**MC54HC151**	**1129**
	RCA	**CD54HC151**	**1150**
	Signetics	54HC151	
	TI	**SN54HC151**	**714**
MM54HC153	**Motorola**	**MC54HC153**	**1129**
	RCA	**CD54HC153**	**1150**
	Signetics	54HC153	
	TI	**SN54HC153**	**714**
MM54HC154	**Motorola**	**MC54HC154**	**1130**
	RCA	**CD54HC154**	**1150**
	Signetics	54HC154	
MM54HC158	**Motorola**	**MC54HC158**	**1129**
	RCA	**CD54HC158**	**1150**
	Signetics	54HC158	
	TI	**SN54HC158**	**714**
MM54HC160	**Motorola**	**MC54HC160**	**1127**
	RCA	**CD54HC160**	**1150**
	Signetics	54HC160	
	TI	**SN54HC160**	**714**
	Universal	US74HC160	
MM54HC161	**Motorola**	**MC54HC161**	**1127**
	RCA	**CD54HC161**	**1150**
	Signetics	54HC161	
	TI	**SN54HC161**	**714**
MM54HC162	**Motorola**	**MC54HC162**	**1127**
	RCA	**CD54HC162**	**1150**
	Signetics	54HC162	
	TI	**SN54HC162**	**714**
MM54HC163	**Motorola**	**MC54HC163**	**1127**
	RCA	**CD54HC163**	**1150**
	Signetics	54HC163	
	TI	**SN54HC163**	**714**
MM54HC164	**Motorola**	**MC54HC164**	**1128**
	RCA	**CD54HC164**	**1149**
	Signetics	54HC164	
	TI	**SN54HC164**	**714**
MM54HC165	**Motorola**	**MC54HC165**	**1128**
	RCA	**CD54HC165**	**1149**
	Signetics	54HC165	
	TI	**SN54HC165**	**714**
MM54HC173	**Motorola**	**MC54HC173**	**1126**
	RCA	**CD54HC173**	**1149**
	Signetics	54HC173	
	TI	**SN54HC173**	**714**
MM54HC174	**Motorola**	**MC54HC174**	**1126**
	RCA	**CD54HC174**	**1149**
	Signetics	54HC174	
	TI	**SN54HC174**	**714**
MM54HC175	**Motorola**	**MC54HC175**	**1126**
	RCA	**CD54HC175**	**1149**
	Signetics	54HC175	
	TI	**SN54HC175**	**714**

Manufacturer Device	Replacement Source	Device	IC Master Page
MM54HC192	**Motorola**	**MC54HC192**	**1127**
	RCA	**CD54HC192**	**1150**
	Signetics	54HC192	
	TI	**SN54HC192**	**714**
MM54HC193	**Motorola**	**MC54HC193**	**1127**
	RCA	**CD54HC193**	**1150**
	Signetics	54HC193	
	TI	**SN54HC193**	**714**
MM54HC194	**Motorola**	**MC54HC194**	**1128**
	RCA	**CD54HC194**	**1149**
	Signetics	54HC194	
	TI	**SN54HC194**	**714**
MM54HC195	**Motorola**	**MC54HC195**	**1128**
	NEC	UPD23C1000	
	RCA	**CD54HC195**	**1149**
	Signetics	54HC195	
	TI	**SN54HC195**	**714**
	VTI	**VT231024**	**4265**
MM54HC20	**Motorola**	**MC54HC20**	**1122**
	RCA	**CD54HC20**	**1149**
	Signetics	54HC20	
	TI	**SN54HC20**	**714**
MM54HC221	Motorola	MC54HC221	
	RCA	**CD54HC221**	**1150**
	Signetics	54HC221	
MM54HC237	Motorola	MC54HC237	
	RCA	**CD54HC237**	**1150**
	SSS	SN54HC237	
	TI	**SN54HC237**	**714**
MM54HC240	Mitel	MD54HC240	
	Motorola	**MC54HC240**	**1124**
	RCA	**CD54HC240**	**1149**
	Signetics	54HC240	
	SSS	SS54HC240	
	Supertex	SI54HC240	
	TI	**SN54HC240**	**714**
MM54HC241	Mitel	MD54HC241	
	Motorola	**MC54HC241**	**1124**
	RCA	**CD54HC241**	**1149**
	Signetics	54HC241	
	SSS	SS54HC241	
	Supertex	SI54HC241	
	TI	**SN54HC241**	**714**
MM54HC242	**Motorola**	**MC54HC242**	**1124**
	RCA	**CD54HC242**	**1149**
	Signetics	54HC242	
	TI	**SN54HC242**	**714**
MM54HC243	**Motorola**	**MC54HC243**	**1124**
	RCA	**CD54HC243**	**1149**
	Signetics	54HC243	
	TI	**SN54HC243**	**714**
MM54HC244	Mitel	MD54HC244	
	Motorola	**MC54HC244**	**1124**
	RCA	**CD54HC244**	**1149**
	Signetics	54HC244	
	SSS	SS54HC244	
	Supertex	SI54HC244	
	Telmos	TMD54HC244	
	TI	**SN54HC244**	**714**
MM54HC245	**Motorola**	**MC54HC245**	**1124**
	RCA	**CD54HC245**	**1149**
	Signetics	54HC245	
	SSS	SS54HC245	
	TI	**SN54HC245**	**714**
MM54HC251	**Motorola**	**MC54HC251**	**1129**
	RCA	**CD54HC251**	**1150**
	Signetics	54HC251	
	TI	**SN54HC251**	**714**
MM54HC253	**Motorola**	**MC54HC253**	**1129**
	RCA	**CD54HC253**	**1150**
	Signetics	54HC253	
	TI	**SN54HC253**	**714**
MM54HC257	**Motorola**	**MC54HC257**	**1129**
	RCA	**CD54HC257**	**1150**
	Signetics	54HC257	
	TI	**SN54HC257**	**714**
MM54HC259	**Motorola**	**MC54HC259**	**1126**
	RCA	**CD54HC259**	**1150**
	Signetics	54HC259	
	TI	**SN54HC259**	**714**
MM54HC266	**Motorola**	**MC54HC266**	**1123**
	RCA	CD54HC266	
	Signetics	54HC266	
	TI	**SN54HC266**	**714**
MM54HC27	**Motorola**	**MC54HC27**	**1122**
	RCA	**CD54HC27**	**1149**
	Signetics	54HC27	
	TI	**SN54HC27**	**714**
MM54HC280	**Motorola**	**MC54HC280**	**1132**
	RCA	**CD54HC280**	**1150**
	Signetics	54HC280	
	TI	**SN54HC280**	**714**

Manufacturer Device	Replacement Source	Device	IC Master Page
MM54HC299	**Motorola**	**MC54HC299**	**1129**
	RCA	**CD54HC299**	**1149**
	Signetics	54HC299	
MM54HC30	**Motorola**	**MC54HC30**	**1122**
	RCA	**CD54HC30**	**1149**
	Signetics	54HC30	
	TI	**SN54HC30**	**714**
MM54HC32	**Motorola**	**MC54HC32**	**1122**
	RCA	**CD54HC32**	**1149**
	Signetics	54HC32	
	TI	**SN54HC32**	**714**
MM54HC354	**Motorola**	**MC54HC354**	**1130**
	RCA	**CD54HC354**	**1150**
	Signetics	54HC354	
MM54HC356	**Motorola**	**MC54HC356**	**1130**
	RCA	**CD54HC356**	**1150**
	Signetics	54HC356	
MM54HC365	**Motorola**	**MC54HC365**	**1124**
	RCA	**CD54HC365**	**1149**
	Signetics	54HC365	
MM54HC366	**Motorola**	**MC54HC366**	**1124**
	RCA	**CD54HC366**	**1149**
	Signetics	54HC366	
	TI	**SN54HC366**	**714**
MM54HC367	**Motorola**	**MC54HC367**	**1124**
	RCA	**CD54HC367**	**1149**
	Signetics	54HC367	
	TI	**SN54HC367**	**714**
MM54HC368	**Motorola**	**MC54HC368**	**1124**
	RCA	**CD54HC368**	**1149**
	Signetics	54HC368	
	TI	**SN54HC368**	**714**
MM54HC373	Mitel	MD54HC373	
	Motorola	**MC54HC373**	**1126**
	RCA	**CD54HC373**	**1150**
	Signetics	54HC373	
	SSS	SS54HC373	
	Supertex	SI54HC373	
	TI	**SN54HC373**	**714**
MM54HC374	Mitel	MD54HC374	
	Motorola	**MC54HC374**	**1126**
	RCA	**CD54HC374**	**1149**
	Signetics	54HC374	
	SSS	SS54HC374	
	Supertex	SI54HC374	
	TI	**SN54HC374**	**714**
MM54HC390	**Motorola**	**MC54HC390**	**1127**
	RCA	**CD54HC390**	**1150**
	Signetics	54HC390	
	TI	**SN54HC390**	**714**
MM54HC4002	**Motorola**	**MC54HC4002**	**1123**
	RCA	**CD54HC4002**	**1149**
	Signetics	54HC4002	
	TI	**SN54HC4002**	**714**
MM54HC4017	**Motorola**	**MC54HC4017**	**1128**
	RCA	**CD54HC4017**	**1150**
	Signetics	54HC4017	
MM54HC4020	**Motorola**	**MC54HC4020**	**1128**
	RCA	**CD54HC4020**	**1150**
	Signetics	54HC4020	
	TI	**SN54HC4020**	**714**
MM54HC4040	**Motorola**	**MC54HC4040**	**1128**
	RCA	**CD54HC4040**	**1150**
	Signetics	54HC4040	
	TI	**SN54HC4040**	**714**
MM54HC4049	**Motorola**	**MC54HC4049**	**1124**
	RCA	CD54HC4049	
	Signetics	54HC4049	
MM54HC4050	**Motorola**	**MC54HC4050**	**1124**
	RCA	CD54HC4050	
	Signetics	54HC4050	
MM54HC4060	**Motorola**	**MC54HC4060**	**1128**
	RCA	**CD54HC4060**	**1150**
	Signetics	54HC4060	
	TI	**SN54HC4060**	**714**
MM54HC4075	**Motorola**	**MC54HC4075**	**1122**
	RCA	**CD54HC4075**	**1149**
MM54HC4078	**Motorola**	**MC54HC4078**	**1123**
MM54HC42	**Motorola**	**MC54HC42**	**1130**
	RCA	**CD54HC42**	**1150**
	Signetics	54HC42	
	TI	**SN54HC42**	**714**
MM54HC4514	**Motorola**	**MC54HC4514**	**1130**
	RCA	**CD54HC4514**	**1150**
	Signetics	54HC4514	
MM54HC4538	**Motorola**	**MC54HC4538**	**1131**
	RCA	**CD54HC4538**	**1150**
	Signetics	54HC4538	
MM54HC533	**Motorola**	**MC54HC533**	**1126**
	RCA	**CD54HC533**	**1150**
	Signetics	54HC533	

(Continued)

◆ Discontinued

The manufacturers report their devices can be used as direct replacements.
Performance details often differ, so compare the specifications considering your requirements.

National Semiconductor (Cont'd)

Manufacturer Device	Replacement Source	Device	IC Master Page
MM54HC533	SSS	SS54HC533	
	TI	**SN54HC533**	714
MM54HC534	**Motorola**	**MC54HC534**	1127
	RCA	**CD54HC534**	1149
	Signetics	54HC534	
	SSS	SS54HC534	
	TI	**SN54HC534**	714
MM54HC563	**RCA**	**CD54HC563**	1150
	Signetics	54HC563	
	SSS	SS54HC563	
	TI	**SN54HC563**	714
MM54HC564	**RCA**	**CD54HC564**	1149
	Signetics	54HC564	
	SSS	SS54HC564	
MM54HC573	**Motorola**	**MC54HC573**	1126
	RCA	**CD54HC573**	1150
	Signetics	54HC573	
	SSS	SS54HC573	
MM54HC574	**Motorola**	**MC54HC574**	1127
	RCA	**CD54HC574**	1149
	Signetics	54HC574	
	SSS	SS54HC574	
	TI	**SN54HC574**	714
MM54HC640	**Motorola**	**MC54HC640**	1125
	RCA	**CD54HC640**	1149
	Signetics	54HC640	
	SSS	SS54HC640	
	TI	**SN54HC640**	714
MM54HC643	**Motorola**	**MC54HC643**	1125
	RCA	**CD54HC643**	1149
	Signetics	54HC643	
	TI	**SN54HC643**	714
MM54HC645	Signetics	54HC645	
	SSS	SS54HC645	
	TI	**SN54HC645**	714
MM54HC646	**Motorola**	**MC54HC646**	1125
	RCA	**CD54HC646**	1149
	Signetics	54HC646	
	TI	**SN54HC646**	714
MM54HC648	**Motorola**	**MC54HC648**	1125
	RCA	**CD54HC648**	1149
	Signetics	54HC648	
	TI	**SN54HC648**	714
MM54HC688	**Motorola**	**MC54HC688**	1131
	RCA	**CD54HC688**	1150
	Signetics	54HC688	
MM54HC73	**Motorola**	**MC54HC73**	1126
	Nitron	NC74HCT42	
	RCA	**CD54HC73**	1149
	Signetics	54HC73	
MM54HC74	**Motorola**	**MC54HC74**	1126
	RCA	**CD54HC74**	1149
	Signetics	54HC74	
	TI	**SN54HC74**	714
MM54HC75	**Motorola**	**MC54HC75**	1126
	RCA	**CD54HC75**	1150
	Signetics	54HC75	
	TI	**SN54HC75**	714
MM54HC76	**Motorola**	**MC54HC76**	1126
	Signetics	54HC76	
MM54HC85	**Motorola**	**MC54HC85**	1131
	RCA	**CD54HC85**	1150
	Signetics	54HC85	
MM54HC86	**Motorola**	**MC54HC86**	1123
	RCA	**CD54HC86**	1149
	Signetics	54HC86	
	TI	**SN54HC86**	714
MM54HCT240	CTI	54HCT240	
	Mitel	MD54HCT240	
	Motorola	MC54HCT240	
	RCA	**CD54HCT240**	1149
	SPI	SP54HCT240	
	Supertex	SI54HCT240	
	TI	**SN54HCT240**	714
MM54HCT241	CTI	54HCT241	
	Mitel	MD54HCT241	
	Motorola	MC54HCT241	
	RCA	**CD54HCT241**	1149
	SPI	SP54HCT241	
	Signetics	54HCT241	
	SSS	SS54HCT241	
	Supertex	SI54HCT241	
	TI	**SN54HCT241**	714
MM54HCT244	CTI	54HCT244	
	Mitel	MD54HCT244	
	Motorola	MC54HCT244	
	RCA	**CD54HCT244**	1149
	SPI	SP54HCT244	
	Signetics	54HCT244	
		(Continued)	
MM54HCT244	SSS	SS54HCT244	
	Supertex	SI54HCT244	
	TI	**SN54HCT244**	714
MM54HCT373	CTI	54HCT373	
	Mitel	MD54HCT343	
		MD54HCT373	
	Motorola	MC54HCT373	
	RCA	**CD54HCT373**	1150
	SPI	SP54HCT373	
	Signetics	54HCT373	
	SSS	SS54HCT373	
	Supertex	SI54HCT373	
	TI	**SN54HCT373**	714
MM54HCT374	CTI	54HCT374	
	Mitel	MD54HCT374	
	Motorola	MC54HCT374	
	RCA	**CD54HCT374**	1149
	SPI	SP54HCT374	
	SSS	SS54HCT374	
	Supertex	SI54HCT374	
	TI	**SN54HCT374**	714
MM54S289	AMD	SN5489-1	
		SN54S289	
	National	DM5489	
		DM54S289	
	Signetics	54S289	
		54S301	
		S8225	
		S82S25	
◆MM552	Intersil	MM552	
◆MM555	Intersil	MM555	
MM58438	GouldAMI	S4521	
	Hughes	HLCD0438	
MM58538	Hughes	HLCD0538	
MM58539	Hughes	HLCD0539	
MM58540	Hughes	HLCD0540	
MM58548	Hughes	HLCD0548	
MM74C00	Fairchild	F4011	
	Motorola	MC14011	
	National	CD4011	
	OKI	MSM4011	
	RCA	CD4011	
	Sanyo	LC4011	
	SGS	HCC/HCF4011	
	Signetics	HEF4011	
	Solitron	CM4011	
	SSS	SCL4011	
	Toshiba	TC4011	
MM74C02	Fairchild	F4001	
	Motorola	MC14001	
	National	CD4001	
	OKI	MSM4001	
	RCA	CD4001	
	Sanyo	LC4001B	
	SGS	HCC/HCF4001	
	Signetics	HEF4001	
	Solitron	CM4001	
	SSS	SCL4001	
	Toshiba	TC4001	
MM74C04	Fairchild	F4069	
	Motorola	MC14069	
	National	CD4069	
		MM54C04	
	OKI	MSM4069	
	RCA	CD4069	
	Sanyo	LC4069	
	SGS	HCC/HCF4069	
	Signetics	HEF4069	
	Solitron	CM4069	
	SSS	SCL4069	
		SCL4449	
	Toshiba	TC4069	
MM74C08	Fairchild	F4081	
	Motorola	MC14081	
	National	CD4081	
	OKI	MSM4081	
	RCA	CD4081	
	Sanyo	LC4081	
	SGS	HCC/HCF4081	
	Signetics	HEF4081	
	Solitron	CM4081	
	SSS	SCL4081	
	Toshiba	TC4081	
MM74C10	Fairchild	F4023	
	Motorola	MC14023	
	National	CD4023	
	RCA	CD4023	
	SGS	HCC/HCF4023	
	Signetics	HEF4023	
	Solitron	CM4023	
	SSS	SCL4023	
	Toshiba	TC4023	
MM74C14	Fairchild	F40014	
	Motorola	MC14584	
	National	CD40106	
		CD4584	
		MM54C14	
	RCA	CD40106	
	SGS	HCC/HCF40106	
	Signetics	HEF40106	
	SSS	SCL4584	
MM74C164	Fairchild	F4015	
	Motorola	MC14015	
	National	CD4015	
	OKI	MSM4015	
	RCA	CD4015	
	Sanyo	LC4015	
	SGS	HCC/HCF4015	
	Signetics	HEF4015	
	Solitron	CM4015	
	SSS	SCL4015	
	Toshiba	TC4015	
MM74C173	Fairchild	F4076	
	Motorola	MC14076	
	National	CD4076	
		MM54C173	
	RCA	CD4076	
	SGS	HCC/HCF4076	
	Signetics	HEF4076	
	Solitron	CM4076	
	SSS	SCL4076	
	Toshiba	TC4076	
MM74C175	Fairchild	F40175	
	Motorola	MC14175	
	National	CD40175	
		MM54C175	
	Signetics	HEF40175	
	Toshiba	TC40175	
MM74C192	Fairchild	F40192	
	National	MM54C192	
MM74C193	Fairchild	F40193	
	National	CD40193	
		MM54C193	
	RCA	CD40193	
	SGS	HCC/HCF40193	
	Signetics	HEF40193	
	SSS	SCL4193	
	Toshiba	**TC40193**	1363
MM74C195	Fairchild	F40195	
	National	CD40195	
MM74C221	Fairchild	F4528	
	Motorola	MC14528	
	National	CD4528	
	RCA	CD4098	
	SGS	HCC/HCF4098	
	Signetics	HEF4528	
	SSS	SCL4528	
	Toshiba	TC4528	
MM74C32	Fairchild	F4071	
	Motorola	MC14071	
	National	CD4071	
	OKI	MSM4071	
	RCA	CD4071	
	Sanyo	LC4071	
	SGS	HCC/HCF4071	
	Signetics	HEF4071	
	Solitron	CM4071	
	SSS	SCL4071	
	Toshiba	TC4071	
MM74C42	Fairchild	F4028	
	Motorola	MC14028	
	National	CD4028	
	OKI	MSM4028	
	RCA	CD4028	
	Sanyo	LC4028	
	SGS	HCC/HCF4028	
	Signetics	HEF4028	
	Solitron	CM4028	
	SSS	SCL4028	
	Toshiba	TC4028	
MM74C74	Fairchild	F4013	
	Motorola	MC14013	
	National	CD4013	
	OKI	MSM4013	
	RCA	CD4013	
	Sanyo	LC4013	
	SGS	HCC/HCF4013	
	Signetics	HEF4013	
	Solitron	CM4013	
	SSS	SCL4013	
	Toshiba	TC4013	
MM74C76	Fairchild	F4027	
	Motorola	MC14027	
	National	CD4027	
		(Continued)	
MM74C76	OKI	MSM4027	
	RCA	CD4027	
	Sanyo	LC4027	
	SGS	HCC/HCF4027	
	Signetics	HEF4027	
	Solitron	CM4027	
	SSS	SCL4027	
MM74C83	Fairchild	F4008	
	Motorola	MC14008	
	National	CD4008	
	RCA	CD4008	
	SGS	HCC/HCF4008	
	Signetics	HEF4008	
	Solitron	CM4008	
	SSS	SCL4008	
	Toshiba	TC4008	
MM74C85	Fairchild	F40085	
	Motorola	MC14585	
	RCA	CD4585	
	SGS	HCC/HCF4585	
	Signetics	HEF4585	
	SSS	SCL4585	
	Toshiba	TC4585	
MM74C86	Fairchild	F4070	
	Motorola	MC14070	
	National	CD4070	
	RCA	CD4070	
	SGS	HCC/HCF4070	
	Signetics	HEF4070	
	Solitron	CM4070	
	SSS	SCL4070	
MM74C89	Fairchild	F40089	
MM74C920	GouldAMI	S5101	
		S6501	
	Harris	MH6501	
	Hitachi	HM435101	
	Intel	5101	
	Motorola	MCM5101	
		MCMS1L01	
	Panasonic	MNS101	
	RCA	**MWS5101**	**1673,1676**
	Sharp	LH5101	
	SSS	SCM5101	
	Synertek	SY2101	
	Toshiba	TC5501	
MM74C930	GouldAMI	6518	
	Harris	HM6518	
	MicroPwr	6518	
	Motorola	6518	
MM74C945	Maxim	MM74C945	
MM74C946	Maxim	MM74C946	
MM74C947	Maxim	MM74C947	
MM74HC00	Hitachi	HD74HC00	
	Motorola	**MC74HC00**	1122
	RCA	**CD74HC00**	1149
	SPI	SP74HC00	
	SGS	M74HC00	
	Signetics	**74HC00**	1156
	TI	SN74HC00	
	Toshiba	**TC40H000**	1363
	Universal	US74HC00	
MM74HC02	Hitachi	HD74HC02	
	Motorola	**MC74HC02**	1122
	RCA	**CD74HC02**	1149
	SPI	SP74HC02	
	SGS	M74HC02	
	Signetics	**74HC02**	1156
	TI	SN74HC02	
	Toshiba	**TC40H002**	1363
	Universal	US74HC02	
MM74HC03	**Motorola**	**MC74HC03**	1122
	RCA	**CD74HC03**	1149
	SGS	M74HC03	
	TI	SN74HC03	
	Toshiba	**TC74HC03**	1363
	Universal	US74HC03	
MM74HC04	Hitachi	HD74HC04	
	Motorola	**MC74HC04**	1124
	RCA	**CD74HC04**	1149
	SPI	SP74HC04	
	SGS	M74HC04	
	TI	SN74HC04	
	Toshiba	**TC40H004**	1363
	Universal	US74HC04	
MM74HC08	Hitachi	HD74HC08	
	Motorola	**MC74HC08**	1122
	RCA	**CD74HC08**	1149
	SPI	SP74HC08	
	SGS	M74HC08	
	Signetics	**74HC08**	1156
		(Continued)	

◆ Discontinued

Bold face device numbers indicate manufacturers data is provided in the IC Master on the pages noted.

National Semiconductor (Cont'd)

Manufacturer Device	Replacement Source	Device	IC Master Page
MM74HC08	TI	SN74HC08	
	Universal	US74HC08	
MM74HC10	Hitachi	HD74HC10	
	Motorola	**MC74HC10**	**1122**
	RCA	**CD74HC10**	**1149**
	SPI	SP74HC10	
	SGS	M74HC10	
	Signetics	**74HC10**	**1156**
	SiliconG	SG75474	
	TI	SN74HC10	
	Toshiba	**TC40H010**	**1363**
	Universal	US74HC10	
MM74HC107	Hitachi	HD74HC107	
	Motorola	**MC74HC107**	**1126**
	Nitron	NC74HC107	
	RCA	**CD74HC107**	**1149**
	SPI	SP74HC107	
	SGS	M74HC107	
	Signetics	**74HC107**	**1156**
	TI	SN74HC107	
	Toshiba	**TC40H107**	**1363**
	Universal	US74HC107	
MM74HC109	Hitachi	HD74HC109	
		HD74HC14	
	Motorola	**MC74HC109**	**1126**
	Nitron	NC74HC109	
	RCA	**CD74HC109**	**1149**
	SPI	SP74HC109	
	SGS	M74HC109	
	Signetics	**74HC109**	**1156**
	TI	SN74HC109	
	Toshiba	**TC74HC109**	**1363**
	Universal	US74HC109	
MM74HC11	Hitachi	HD74HC11	
	Motorola	**MC74HC11**	**1122**
	RCA	**CD74HC11**	**1149**
	SPI	SP74HC11	
	SGS	M74HC11	
	Signetics	**74HC11**	**1156**
	TI	SN74HC11	
	Toshiba	**TC40H011**	**1363**
	Universal	US74HC11	
MM74HC112	Hitachi	HD74HC112	
	Motorola	**MC74HC112**	**1126**
	RCA	**CD74HC112**	**1149**
	SPI	SP74HC112N	
	SGS	M74HC112	
	Signetics	**74HC112**	**1156**
	TI	SN74HC112	
	Universal	US74HC112	
MM74HC113	Hitachi	HD74HC113	
	Motorola	**MC74HC113**	**1126**
	SPI	SP74HC113	
	SGS	M74HC113	
	TI	SN74HC113	
	Universal	US74HC113	
MM74HC123	Hitachi	HD74HC123	
	Motorola	MC74HC123	
	SGS	M74HC123	
	Signetics	**74HC123**	**1157**
	TI	SN74HC123	
	Universal	US74HC123	
MM74HC125	Hitachi	HD74HC125	
	Motorola	**MC74HC125**	**1124**
	SPI	SP74HC125	
	SGS	M74HC125	
	TI	SN74HC125	
	Toshiba	**TC74HC125**	**1363**
	Universal	US74HC125	
MM74HC126	Hitachi	HD74HC126	
	Motorola	**MC74HC126**	**1124**
	SPI	SP74HC126	
	SGS	M74HC126	
	TI	SN74HC126	
	Toshiba	**TC74HC126**	**1363**
	Universal	US74HC126	
MM74HC132	Hitachi	HD74HC132	
	Motorola	**MC74HC132**	**1125**
	RCA	**CD74HC132**	**1149**
	SPI	SP74HC132	
	SGS	M74HC132	
	Signetics	**74HC132**	**1157**
	TI	SN74HC132	
	Universal	US74HC132	
MM74HC133	**Motorola**	**MC74HC133**	**1122**
	RCA	CD74HC133	
	SPI	SP74HC133	
	SGS	M74HC133	
	Signetics	74HC133	
			(Continued)
MM74HC133	TI	SN74HC133	
	Universal	US74HC133	
MM74HC137	Hitachi	HD74HC137	
	Motorola	MC74HC137	
	SPI	SP74HC137	
	SGS	M74HC137	
	TI	SN74HC137	
	Toshiba	**TC74HC137**	**1363**
	Universal	US74HC137	
MM74HC138	Hitachi	HD74HC138	
	Motorola	**MC74HC138**	**1130**
	Nitron	NC74HC138	
	RCA	**CD74HC138**	**1150**
	SPI	SP74HC138	
	SGS	M74HC138	
	Signetics	**74HC138**	**1157**
	SSS	SS74HC138	
	TI	SN74HC138	
	Universal	US74HC138	
MM74HC139	Hitachi	HD74HC139	
	Motorola	**MC74HC139**	**1130**
	Nitron	NC74HC139	
	RCA	**CD74HC139**	**1150**
	SPI	SP74HC139	
	SGS	M74HC139	
	Signetics	**74HC139**	**1157**
	SSS	SS74HC139	
	TI	SN74HC139	
	Toshiba	**TC40H139**	**1363**
	Universal	US74HC139	
MM74HC14	**Motorola**	**MC74HC14**	**1125**
	RCA	**CD74HC14**	**1149**
	SPI	SP74HC14	
	SGS	M74HC14	
	Signetics	**74HC14**	**1156**
	TI	SN74HC14	
	Universal	US74HC14	
MM74HC147	Hitachi	HD74HC147	
	Motorola	**MC74HC147**	**1131**
	RCA	**CD74HC147**	**1150**
	SPI	SP74HC147	
	SGS	M74HC147	
	Signetics	**74HC147**	**1157**
	TI	SN74HC147	
	Universal	US74HC147	
MM74HC151	Hitachi	HD74HC151	
	Motorola	**MC74HC151**	**1129**
	RCA	**CD74HC151**	**1150**
	SPI	SP74HC151	
	SGS	M74HC151	
	Signetics	**74HC151**	**1157**
	TI	SN74HC151	
	Universal	US74HC151	
MM74HC153	Hitachi	HD74HC153	
	Motorola	**MC74HC153**	**1129**
	RCA	**CD74HC153**	**1150**
	SPI	SP74HC153	
	SGS	M74HC153	
	Signetics	**74HC153**	**1157**
	TI	SN74HC153	
	Toshiba	**TC40H153**	**1363**
	Universal	US74HC153	
MM74HC154	Hitachi	HD74HC154	
	Motorola	**MC74HC154**	**1130**
	RCA	**CD74HC154**	**1150**
	SGS	M74HC154	
	Signetics	**74HC154**	**1157**
	TI	SN74HC154	
	Universal	US74HC154	
MM74HC157	Hitachi	HD74HC157	
	Motorola	**MC74HC157**	**1129**
	Nitron	NC74HC157	
	RCA	**CD74HC157**	**1150**
	SPI	SP74HC157	
	SGS	M74HC157	
	Signetics	**74HC157**	**1157**
	TI	SN74HC157	
	Toshiba	**TC40H157**	**1363**
	Universal	US74HC157	
MM74HC158	Hitachi	HD74HC158	
	Motorola	**MC74HC158**	**1129**
	RCA	**CD74HC158**	**1150**
	SPI	SP74HC158	
	SGS	M74HC158	
	Signetics	**74HC158**	**1157**
	TI	SN74HC158	
	Toshiba	**TC40H158**	**1363**
	Universal	US74HC158	
MM74HC160	**Motorola**	**MC74HC160**	**1127**
	RCA	**CD74HC160**	**1150**
	SPI	SP74HC160	
	SGS	M74HC160	
			(Continued)
MM74HC160	**Signetics**	**74HC160**	**1157**
	TI	SN74HC160	
	Universal	US74HC160	
MM74HC161	Hitachi	HD74HC161	
	Motorola	**MC74HC161**	**1127**
	RCA	**CD74HC161**	**1150**
	SPI	SP74HC161	
	SGS	M74HC161	
	Signetics	**74HC161**	**1157**
	TI	SN74HC161	
	Universal	US74HC161	
MM74HC162	Hitachi	HD74HC162	
	Motorola	**MC74HC162**	**1127**
	RCA	**CD74HC162**	**1150**
	SPI	SP74HC162	
	SGS	M74HC162	
	Signetics	**74HC162**	**1157**
	TI	SN74HC162	
	Universal	US74HC162	
MM74HC163	Hitachi	HD74HC163	
	Motorola	**MC74HC163**	**1127**
	RCA	**CD74HC163**	**1150**
	SPI	SP74HC163	
	SGS	M74HC163	
	Signetics	**74HC163**	**1157**
	TI	SN74HC163	
	Universal	US74HC163	
MM74HC164	Hitachi	HD74HC164	
	Motorola	**MC74HC164**	**1128**
	RCA	**CD74HC164**	**1149**
	SPI	SP74HC164	
	SGS	M74HC164	
	Signetics	**74HC164**	**1157**
	TI	SN74HC164	
	Universal	US74HC164	
MM74HC165	Hitachi	HD74HC165	
	Motorola	**MC74HC165**	**1128**
	RCA	**CD74HC165**	**1149**
	SPI	SP74HC165	
	SGS	M74HC165	
	Signetics	**74HC165**	**1157**
	TI	SN74HC165	
	Universal	US74HC165	
MM74HC173	Hitachi	HD74HC173	
	Motorola	**MC74HC173**	**1126**
	RCA	**CD74HC173**	**1149**
	SPI	SP74HC173	
	SGS	M74HC173	
	Signetics	**74HC173**	**1157**
	TI	SN74HC173	
	Universal	US74HC173	
MM74HC174	Hitachi	HD74HC174	
	Motorola	**MC74HC174**	**1126**
	Nitron	NC74HC174	
	RCA	**CD74HC174**	**1149**
	SPI	SP74HC174	
	SGS	M74HC174	
	Signetics	74HC174	
	TI	SN74HC174	
	Toshiba	**TC40H174**	**1363**
	Universal	US74HC174	
MM74HC175	Hitachi	HD74HC175	
	Motorola	**MC74HC175**	**1126**
	Nitron	NC74HC175	
	RCA	**CD74HC175**	**1149**
	SPI	SP74HC175	
	SGS	M74HC175	
	Signetics	**74HC175**	**1157**
	TI	SN74HC175	
	Toshiba	**TC40H175**	**1363**
	Universal	US74HC175	
MM74HC192	Hitachi	HD74HC192	
	Motorola	**MC74HC192**	**1127**
	RCA	**CD74HC192**	**1150**
	SPI	SP74HC192	
	SGS	M74HC192	
	Signetics	**74HC192**	**1157**
	TI	SN74HC192	
	Toshiba	**TC40H192**	**1363**
	Universal	US74HC192	
MM74HC193	Hitachi	HD74HC193	
	Motorola	**MC74HC193**	**1127**
	RCA	**CD74HC193**	**1150**
	SPI	SP74HC193	
	SGS	M74HC193	
	Signetics	**74HC193**	**1157**
	TI	SN74HC193	
	Toshiba	**TC40H193**	**1363**
	Universal	US74HC193	
MM74HC194	Hitachi	HD74HC194	
	Motorola	**MC74HC194**	**1128**
	RCA	**CD74HC194**	**1149**
			(Continued)
MM74HC194	SPI	SP74HC194	
	SGS	M74HC194	
	Signetics	**74HC194**	**1157**
	TI	SN74HC194	
	Universal	US74HC194	
MM74HC195	Hitachi	HD74HC195	
	Motorola	**MC74HC195**	**1128**
	RCA	**CD74HC195**	**1149**
	SPI	SP74HC195	
	SGS	M74HC195	
	Signetics	**74HC195**	**1157**
	TI	SN74HC195	
	Universal	US74HC195	
MM74HC20	Hitachi	HD74HC20	
	Motorola	**MC74HC20**	**1122**
	RCA	**CD74HC20**	**1149**
	SPI	SP74HC20	
	SGS	M74HC20	
	Signetics	**74HC20**	**1156**
	TI	SN74HC20	
	Toshiba	**TC40H020**	**1363**
	Universal	US74HC20	
MM74HC221	Motorola	MC74HC221	
	RCA	**CD74HC221**	**1150**
	SGS	M74HC221	
	Signetics	74HC221	
	Universal	US74HC221	
MM74HC240	Hitachi	HD74HC240	
	Mitel	MD74HC240	
	Motorola	**MC74HC240**	**1124**
	Nitron	NC74HC240	
	RCA	**CD74HC240**	**1149**
	SPI	SP74HC240	
	SGS	M74HC240	
	Signetics	**74HC240**	**1157**
	SSS	SS74HC240	
	Supertex	SI74HC240	
	TI	SN74HC240	
	Toshiba	**TC40H240**	**1363**
	Universal	US74HC240	
	Zytrex	ZX74HC240	
MM74HC241	Hitachi	HD74HC241	
	Mitel	MD74HC241	
	Motorola	**MC74HC241**	**1124**
	Nitron	NC74HC241	
	RCA	**CD74HC241**	**1149**
	SPI	SP74HC241	
	SGS	M74HC241	
	Signetics	**74HC241**	**1157**
	SSS	SS74HC241	
	Supertex	SI74HC241	
	TI	SN74HC241	
	Universal	US74HC240	
	Zytrex	ZX74HC241	
MM74HC242	Hitachi	HD74HC242	
	Motorola	**MC74HC242**	**1124**
	Nitron	NC74HC242	
	RCA	**CD74HC242**	**1149**
		SGN	
	SPI	SP74HC242	
	SGS	M74HC242	
	Signetics	**74HC242**	**1158**
	TI	SN74HC242	
	Universal	US74HC242	
MM74HC243	Hitachi	HD74HC243	
	Motorola	**MC74HC243**	**1124**
		MC74HC245	**1124**
	RCA	**CD74HC243**	**1149**
	SPI	SP74HC243	
	SGS	M74HC243	
		M74HC245	
	Signetics	**74HC243**	**1158**
	TI	SN74HC243	
	Universal	US74HC243	
MM74HC244	Hitachi	HD74HC244	
	Mitel	MD74HC244	
	Motorola	**MC74HC244**	**1124**
	Nitron	NC74HC244	
	RCA	**CD74HC244**	**1149**
	SPI	SP74HC244	
	SGS	M74HC244	
	Signetics	**74HC244**	**1158**
	SSS	SS74HC244	
	Supertex	SI74HC244	
	TI	SN74HC244	
	Universal	US74HC244	
	Zytrex	ZX74HC244	
MM74HC245	Hitachi	HD74HC245	
	Motorola	**MC74HC245**	**1124**
	Nitron	NC74HC245	
	RCA	**CD74HC245**	**1149**
	Signetics	**74HC245**	**1158**
			(Continued)

◆ Discontinued

The manufacturers report their devices can be used as direct replacements.
Performance details often differ, so compare the specifications considering your requirements.

National Semiconductor (Cont'd)

Manufacturer Device	Replacement Source	Device	IC Master Page
MM74HC245	SSS	SS74HC245	
	TI	SN74HC245	
	Universal	US74HC245	
MM74HC251	Hitachi	HD74HC251	
	Motorola	**MC74HC251**	1129
	RCA	**CD74HC251**	1150
	SPI	SP74HC251	
	SGS	M74HC251	
	Signetics	**74HC251**	1158
	TI	SN74HC251	
	Universal	US74HC251	
MM74HC253	Hitachi	HD74HC253	
	Motorola	**MC74HC253**	1129
	RCA	**CD74HC253**	1150
	SPI	SP74HC253	
	SGS	M74HC253	
	Signetics	**74HC253**	1158
	TI	SN74HC253	
	Universal	US74HC253	
MM74HC257	Hitachi	HD74HC257	
	Motorola	**MC74HC257**	1129
	Nitron	NC74HC257	
	RCA	**CD74HC257**	1150
	SPI	SP74HC257	
	SGS	M74HC257	
	Signetics	**74HC257**	1158
	TI	SN74HC257	
	Universal	US74HC257	
MM74HC259	Hitachi	HD74HC259	
	Motorola	**MC74HC259**	1126
	RCA	**CD74HC259**	1150
	SPI	SP74HC259	
	Signetics	**74HC259**	1158
	TI	SN74HC259	
	Universal	US74HC259	
MM74HC266	Hitachi	HD74HC266	
	Motorola	**MC74HC266**	1123
	SPI	SP74HC266	
	SGS	M74HC266	
	Signetics	**74HC266**	1158
	TI	SN74HC266	
	Universal	US74HC266	
MM74HC27	**Motorola**	**MC74HC27**	1122
	RCA	**CD74HC27**	1149
	SPI	SP74HC27	
	SGS	M74HC27	
	Signetics	**74HC27**	1156
	TI	SN74HC27	
	Toshiba	**TC40H027**	1363
	Universal	US74HC27	
MM74HC280	Hitachi	HD74HC280	
	Motorola	**MC74HC280**	1132
	RCA	**CD74HC280**	1150
	SPI	SP74HC280	
	SGS	M74HC280	
	Signetics	**74HC280**	1158
	TI	SN74HC280	
MM74HC299	**Motorola**	**MC74HC299**	1129
	RCA	**CD74HC299**	1149
	SGS	M74HC299	
	Signetics	**74HC299**	1158
	Universal	US74HC299	
MM74HC30	Hitachi	HD74HC30	
	Motorola	**MC74HC30**	1122
	RCA	**CD74HC30**	1149
	SPI	SP74HC30	
	SGS	M74HC30	
	Signetics	**74HC30**	1156
	TI	SN74HC30	
	Universal	US74HC30	
MM74HC32	Hitachi	HD74HC27	
		HD74HC32	
	Motorola	**MC74HC32**	1122
	RCA	**CD74HC32**	1149
	SPI	SP74HC32	
	SGS	M74HC32	
	Signetics	**74HC32**	1156
	TI	SN74HC32	
	Toshiba	**TC40H032**	1363
	Universal	US74HC32	
MM74HC354	Hitachi	HD74HC354	
	Motorola	**MC74HC354**	1130
	RCA	**CD74HC354**	1150
	SGS	M74HC354	
	Signetics	**74HC354**	1158
	TI	SN74HC354	
	Universal	US74HC354	
MM74HC356	Hitachi	HD74HC356	
	Motorola	**MC74HC356**	1130
		(Continued)	
MM74HC356	**RCA**	**CD74HC356**	1150
	SGS	M74HC356	
	Signetics	**74HC356**	1158
	TI	SN74HC356	
	Universal	US74HC356	
MM74HC365	Hitachi	HD74HC365	
	Motorola	**MC74HC365**	1124
	RCA	**CD74HC365**	1149
	SPI	SP74HC365	
	SGS	M74HC365	
	TI	SN74HC365	
	Universal	US74HC365	
MM74HC366	Hitachi	HD74HC366	
	Motorola	**MC74HC366**	1124
	RCA	**CD74HC366**	1149
	SPI	SP74HC366	
	SGS	M74HC366	
	Signetics	**74HC366**	1158
	TI	SN74HC366	
	Universal	US74HC366	
MM74HC367	Hitachi	HD74HC367	
	Motorola	**MC74HC367**	1124
	Nitron	NC74HC367	
	RCA	**CD74HC367**	1149
	SPI	SP74HC367	
	SGS	M74HC367	
	Signetics	**74HC367**	1158
	TI	SN74HC367	
	Universal	US74HC367	
MM74HC368	Hitachi	HD74HC368	
	Motorola	**MC74HC368**	1124
	RCA	**CD74HC368**	1149
	SGS	M74HC368	
	Signetics	**74HC368**	1158
	TI	SN74HC368	
	Universal	US74HC368	
MM74HC373	Hitachi	HD74HC373	
	Mitel	MD74HC373	
	Motorola	**MC74HC373**	1126
	Nitron	NC74HC373	
	RCA	**CD74HC373**	1150
	SPI	SP74HC373	
	SGS	M74HC373	
	Signetics	**74HC373**	1158
	SSS	SS74HC373	
	Supertex	SI74HC373	
	TI	SN74HC373	
	Universal	US74HC373	
	Zytrex	ZX74HC373	
MM74HC374	Hitachi	HD74HC374	
	Mitel	MD74HC374	
	Motorola	**MC74HC374**	1126
	Nitron	NC74HC374	
	RCA	**CD74HC374**	1149
	SPI	SP74HC374	
	SGS	M74HC374	
	Signetics	**74HC374**	1158
	SSS	SS74HC374	
	TI	SN74HC374	
	Universal	US74HC374	
	Zytrex	ZX74HC374	
MM74HC390	Hitachi	HD74HC390	
	Motorola	**MC74HC390**	1127
	RCA	**CD74HC390**	1150
	SPI	SP74HC390	
	SGS	M74HC390	
	Signetics	**74HC390**	1158
	TI	SN74HC390	
	Universal	US74HC390	
MM74HC393	Hitachi	HD74HC393	
	Motorola	**MC74HC393**	1127
	Nitron	NC74HC393	
	RCA	**CD74HC393**	1150
	SPI	SP74HC393	
	SGS	M74HC393	
	Signetics	**74HC393**	1158
	TI	SN74HC393	
	Universal	US74HC393	
MM74HC4002	**Motorola**	**MC74HC4002**	1123
	RCA	**CD74HC4002**	1149
	SPI	SP74HC4002	
	SGS	M74HC4002	
	Signetics	**74HC4002**	1160
	TI	SN74HC4002	
	Universal	US74HC4002	
MM74HC4017	**Motorola**	**MC74HC4017**	1128
	RCA	**CD74HC4017**	1150
	SPI	SP74HC4017	
	SGS	M74HC4017	
	Signetics	**74HC4017**	1160
	TI	SN74HC4017	
	Universal	US74HC4017	
MM74HC4020	Hitachi	HD74HC4020	
	Motorola	**MC74HC4020**	1128
	RCA	**CD74HC4020**	1150
	SPI	SP74HC4020	
	SGS	M74HC4020	
	Signetics	**74HC4020**	1160
	TI	SN74HC4020	
	Universal	US74HC4020	
MM74HC4040	Hitachi	HD74HC4040	
	Motorola	**MC74HC4040**	1128
	RCA	**CD74HC4040**	1150
	SPI	SP74HC4040	
	SGS	M74HC4040	
	Signetics	**74HC4040**	1160
	TI	SN74HC4040	
	Universal	US74HC4040	
MM74HC4049	**Motorola**	**MC74HC4049**	1124
	RCA	**CD74HC4049**	1149
	SGS	M74HC4049	
	Signetics	**74HC4049**	1160
	TI	SN74HC4049	
	Universal	US74HC4049	
MM74HC4060	**Motorola**	**MC74HC4060**	1128
	RCA	**CD74HC4060**	1150
	SGS	M74HC4060	
	Signetics	**74HC4060**	1160
	TI	SN74HC4060	
	Universal	US74HC4060	
MM74HC4075	**Motorola**	**MC74HC4075**	1122
	RCA	**CD74HC4075**	1149
	SPI	SP74HC4075	
	Signetics	**74HC4075**	1161
	TI	SN74HC4075	
	Toshiba	**TC74HC4075**	1363
MM74HC4078	**Motorola**	**MC74HC4078**	1123
	SPI	SP74HC4078	
	SGS	M74HC4078	
	TI	SN74HC4078A	
	Toshiba	**TC74HC4078**	1363
	Universal	US74HC4078	
MM74HC42	Hitachi	HD74HC42	
	Motorola	**MC74HC42**	1130
	Nitron	NC74HC42	
	RCA	**CD74HC42**	1150
	SPI	SP74HC42	
	SGS	M74HC42	
	Signetics	**74HC42**	1156
	TI	SN74HC42	
	Universal	US74HC42	
MM74HC4514	Hitachi	HD74HC4514	
	Motorola	**MC74HC4514**	1130
	RCA	**CD74HC4514**	1150
	SGS	M74HC4514	
	Signetics	**74HC4514**	1161
	TI	SN74HC4514	
	Universal	US74HC4514	
MM74HC4538	**Motorola**	**MC74HC4538**	1131
	RCA	**CD74HC4538**	1150
	SGS	M74HC4538	
	Signetics	**74HC4538**	1161
	Universal	US74HC4538	
MM74HC4543	Cypress	CY7C172	
	IDT	IDT71682	
	Motorola	**MC74HC4543**	1130
	RCA	**CD74HC4543**	1150
	SGS	M74HC4543	
	Signetics	PC74HC4543	
	Toshiba	**TC74HC4543**	1363
	Universal	US74HC4543	
MM74HC51	Hitachi	HD74HC51	
	Motorola	MC74HC51	
	Nitron	NC74HC51	
	TI	SN74HC51	
	Toshiba	**TC74HC51**	1363
	Universal	US74HC51	
MM74HC533	Hitachi	HD74HC533	
	Motorola	**MC74HC533**	1126
	RCA	**CD74HC533**	1150
	SPI	SP74HC533	
	SGS	M74HC533	
	Signetics	**74HC533**	1159
	SSS	SS74HC533	
	TI	SN74HC533	
	Universal	US74HC533	
MM74HC534	Hitachi	HD74HC534	
	Motorola	**MC74HC534**	1127
	RCA	**CD74HC534**	1149
	SPI	SP74HC534	
	SGS	M74HC534	
	Signetics	**74HC534**	1159
	SSS	SS74HC534	
		(Continued)	
MM74HC534	TI	SN74HC534	
	Universal	US74HC534	
MM74HC563	Hitachi	HD74HC563	
	Motorola	**MC74HC563**	1126
	RCA	**CD74HC563**	1150
	SPI	SP74HC563	
	SGS	M74HC563	
	Signetics	**74HC563**	1159
	SSS	SS74HC563	
	TI	SN74HC563	
	Universal	US74HC563	
MM74HC564	Hitachi	HD74HC564	
	Motorola	**MC74HC564**	1127
	RCA	**CD74HC564**	1149
		MC74HC564	
	SGS	M74HC564	
	Signetics	**74HC564**	1159
	SSS	SS74HC564	
	TI	SN74HC564	
	Universal	US74HC564	
MM74HC573	Hitachi	HD74HC573	
	Motorola	**MC74HC573**	1126
	RCA	**CD74HC573**	1150
	SPI	SP74HC573	
	SGS	M74HC573	
	Signetics	**74HC573**	1159
	SSS	SS74HC573	
	TI	SN74HC573	
	Toshiba	**TC74HC573**	1363
	Universal	US74HC573	
MM74HC574	Hitachi	HD74HC574	
	Motorola	**MC74HC574**	1127
	RCA	**CD74HC574**	1149
	SPI	SP74HC574	
	SGS	M74HC574	
	Signetics	**74HC574**	1159
	SSS	SS74HC574	
	TI	SN74HC574	
	Universal	US74HC574	
MM74HC58	Motorola	MC74HC58	
	TI	SN74HC58	
	Universal	US74HC58	
MM74HC640	Hitachi	HD74HC640	
	Motorola	**MC74HC640**	1125
	Nitron	NC74HC640	
	RCA	**CD74HC640**	1149
	Signetics	**74HC640**	1159
	SSS	SS74HC640	
	TI	SN74HC640	
	Universal	US74HC640	
MM74HC643	Hitachi	HD74HC643	
	Motorola	**MC74HC643**	1125
	RCA	**CD74HC643**	1149
	SGS	M74HC643	
	Signetics	**74HC643**	1159
	SSS	SS74HC643	
	TI	SN74HC643	
	Universal	US74HC643	
MM74HC645	Signetics	74HC645	
	SSS	SS74HC645	
	TI	SN74HC645	
MM74HC646	Hitachi	HD74HC646	
	Motorola	**MC74HC646**	1125
	Nitron	NC74HC646	
	RCA	**CD74HC646**	1149
	SGS	M74HC646	
	Signetics	**74HC646**	1159
	TI	SN74HC646	
	Universal	US74HC646	
MM74HC648	Hitachi	HD74HC648	
	Motorola	**MC74HC648**	1125
	RCA	**CD74HC648**	1149
	SGS	M74HC648	
	Signetics	**74HC648**	1159
	TI	SN74HC648	
	Universal	US74HC648	
MM74HC688	**Motorola**	**MC74HC688**	1131
	RCA	**CD74HC688**	1150
	SGS	M74HC688	
	Signetics	74HC688	
	TI	SN74HC688	
	Toshiba	**TC74HC688**	1363
MM74HC73	Hitachi	HD74HC73	
	Motorola	**MC74HC73**	1126
	RCA	**CD74HC73**	1149
	SPI	SP74HC73	
	SGS	M74HC73	
	Signetics	**74HC73**	1156
	TI	SN74HC73	
	Toshiba	**TC74HC73**	1363
	Universal	US74HC73	

◆ Discontinued

Bold face device numbers indicate manufacturers data is provided in the IC Master on the pages noted.

National Semiconductor (Cont'd)

Manufacturer Device	Replacement Source	Device	IC Master Page
MM74HC74	Hitachi	HD74HC74	
	Motorola	**MC74HC74**	**1126**
	Nitron	NC74HC74	
	RCA	**CD74HC74**	**1149**
	SPI	SP74HC74	
	SGS	M74HC74	
	Signetics	**74HC74**	**1156**
	TI	SN74HC74	
	Toshiba	**TC40H074**	**1363**
	Universal	US74HC74	
MM74HC75	Hitachi	HD74HC75	
	Motorola	**MC74HC75**	**1126**
	RCA	**CD74HC75**	**1150**
	SPI	SP74HC75	
	SGS	M74HC75	
	Signetics	**74HC75**	**1156**
	TI	SN74HC75	
	Toshiba	**TC74HC75**	**1363**
	Universal	US74HC75	
MM74HC76	Hitachi	HD74HC76	
	Motorola	**MC74HC76**	**1126**
	SPI	SP74HC76	
	SGS	M74HC76	
	Signetics	74HC76	
	TI	SN74HC76	
	Toshiba	**TC40H076**	**1363**
	Universal	US74HC76	
MM74HC77	Hitachi	HD74HC77	
	RCA	CD74HC77	
	SPI	SP74HC77	
	TI	SN74HC77	
	Toshiba	**TC74HC77**	**1363**
MM74HC85	**Motorola**	**MC74HC85**	**1131**
	RCA	**CD74HC85**	**1150**
	SPI	SP74HC85	
	SGS	M74HC85	
	Signetics	**74HC85**	**1156**
	TI	SN74HC85	
	Universal	US74HC85	
MM74HC86	Hitachi	HD74HC86	
	Motorola	**MC74HC86**	**1123**
	RCA	**CD74HC86**	**1149**
	SPI	SP74HC86N	
	SGS	M74HC86	
	Signetics	**74HC86**	**1156**
	TI	SN74HC86	
	Universal	US74HC86	
MM74HC942	Sierra	SC11002	
MM74HC943	Sierra	SC11003	
MM74HCT160	**RCA**	**CD74HCT160**	**1150**
	Signetics	**74HCT160**	**1157**
	Universal	US74HCT160	
	Zytrex	ZX74HCT160-2	
MM74HCT240	CTI	74HCT240	
	Hitachi	HD74HCT240	
	Micrel	MIC74HCT240	
	MicroTech	74HCTR240	
	Mitel	MD74HCT240	
	Motorola	MC74HCT240	
	Nitron	NC74HCT240	
	Plessey	MV74HCT240	
	RCA	**CD74HCT240**	**1149**
	SPI	SP74HCT240	
	SGS	M74HCT240	
	Signetics	**74HCT240**	**1157**
	SSS	SS74HCT240	
	Supertex	SI74HCT240	
	TI	SN74HCT240	
	Toshiba	**TC74HCT240**	**1363**
	Universal	US74HCT240	
	Zytrex	ZX74HCT240-2	
MM74HCT241	CTI	74HCT241	
	Hitachi	HD74HCT241	
	Micrel	MIC74HCT241	
	MicroTech	74HCTR241	
	Mitel	MD74HCT241	
	Motorola	MC74HCT241	
	Nitron	NC74HCT241	
	Plessey	MV74HCT241	
	RCA	**CD74HCT241**	**1149**
	SPI	SP74HCT241	
	SGS	M74HCT241	
	Signetics	**74HCT241**	**1157**
	SSS	SS74HCT241	
	Supertex	SI74HCT241	
	TI	SN74HCT241	
	Toshiba	**TC74HCT241**	**1363**
	Universal	US74HCT241	
	Zytrex	ZX74HCT241-2	
MM74HCT244	CTI	74HCT244	
	Hitachi	HD74HCT244	
	Micrel	MIC74HCT244	
	MicroTech	74HCTR244	
	Mitel	MD74HCT244	
	Motorola	MC74HCT244	
	Nitron	NC74HCT244	
	Plessey	MV74HCT244	
	RCA	**CD74HCT244**	**1149**
	SPI	SP74HCT244	
	SGS	M74HCT244	
	Signetics	**74HCT244**	**1158**
	SSS	SS74HCT244	
	Supertex	SI74HCT244	
	TI	SN74HCT244	
	Toshiba	**TC74HCT244**	**1363**
	Universal	US74HCT244	
	Zytrex	ZX74HCT244-2	
MM74HCT245	CTI	74HCT245	
	GTEMicro	G74SC245	
	Hitachi	HD74HCT245	
	Micrel	MIC74HCT245	
	MicroTech	74HCTR245	
	Mitel	MD74HCT245	
	Motorola	MC74HCT245	
	Plessey	MV74HCT245	
		MV74SC245	
	RCA	**CD74HCT245**	**1149**
	SPI	SP74HCT245	
	SGS	M74HCT245	
	Signetics	**74HCT245**	**1158**
	SSS	SS74HCT245	
	TI	SN74HCT245	
	Toshiba	**TC74HCT245**	**1363**
	Universal	US74HCT245	
MM74HCT373	CTI	74HCT373	
	GTEMicro	G74SC373	
	Hitachi	HD74HCT373	
	Micrel	MIC74HCT373	
	MicroTech	74HCTR373	
	Mitel	MD74HCT373	
	Motorola	MC74HCT373	
	Nitron	NC74HCT373	
	Plessey	MV74HCT373	
		MV74SC373	
	RCA	**CD74HCT373**	**1150**
	SPI	SP74HCT373	
	SGS	M74HCT373	
	Signetics	**74HCT373**	**1158**
	SSS	SS74HCT373	
	Supertex	SI74HCT373	
	TI	SN74HCT373	
	Toshiba	**TC74HCT373**	**1363**
	Universal	US74HCT373	
	Zytrex	ZX74HCT373-2	
MM74HCT374	CTI	74HCT374	
	GTEMicro	G74SC374	
	Hitachi	HD74HCT374	
	Micrel	MIC74HCT374	
	MicroTech	74HCTR374	
	Mitel	MD74HCT374	
	Motorola	MC74HCT374	
	Nitron	NC74HCT374	
	Plessey	MV74HCT374	
		MV74SC374	
	RCA	CD74HCT374	
	SPI	SP74HCT374	
	SGS	M74HCT374	
	Signetics	**74HCT374**	**1158**
	SSS	SS74HCT374	
	Supertex	SI74HCT374	
	TI	SN74HCT374	
	Toshiba	**TC74HCT374**	**1363**
	Universal	US74HCT374	
	Zytrex	ZX74HCT374-2	
MM74S289	Fairchild	7489	
	National	DM7489	
		DM74S289	
		DM8589	
	Signetics	74S289	
		N82S25	
	TI	SN74S289B	
MM80C98	Fairchild	F40098	
MM8629	Plessey	SP8629	
MMC2116	AMD	AM9128	
		AM9218	
	Cypress	CY7C128	
	Fujitsu	MB8128	
		MB8416	
	Harris	HM6116	
		HM6516	
	IDT	IDT6116	
			(Continued)
MMC2116	Intel	2128	
	MicroPwr	MP6116	
	Mitsubishi	M58275	
		M5M116	
		M5M5116	
		M5M5117	
		M5M5118	
		MS8725	
	Motorola	MCM2016	
		MCM2016H	
		MCM2128	
		MCM6116	**4119**
		MCM61L16	**4119**
		MCM65116	
	NEC	μPD4016	
	OKI	MSM2128	
		MSM5128	**4732,4733**
	RCA	MWS6116A	
	SSS	883C21C16	
		BCM21C16	
		SCM21C16	
		SCM6116	
	TI	TMS4016	
	ThomsonCSF	ET2128	
	Toshiba	**TC5516A**	**4263**
		TMM2015A	
		TMM2016	
		TMM2016A	**4263**
	Samsung	KM6816	
	UMC	UM2128	
	Universal	US574HC133	
MS32082	TI	TMS32082	
MS32201	TI	TMS32201	
NM52132	AMD	AM9232	
	CSG	MPS2332	
	Fairchild	F3532	
	GI	R03-9332	
	GouldAMI	S2333	
		S68A332	
	GTEMicro	G2332	
	Hitachi	HN46332	
	Intech	IM7332	
	Intel	2332	
	Mitsubishi	M58333	
	Motorola	**MCM68A332**	**4120**
	NCR	NCR2332	
	NEC	UPD2332A	
	Panasonic	MN2332	
	RCA	**CDM5333**	**1673,1677**
	Rockwell	R2332	
	SGS	M2332	
	Sharp	LH2332	
	Siemens	SA88332	
		SAB8332	
	Signetics	2332	
		2632A	
	SiliconG	SG3532	
	SSS	SCM23C32	
	SMC	ROM4732	
	Supertex	23SC32	
		CM3200	
	Synertek	SY2332	
	TI	TM2332	
		TMS2332	
		TMS4732	
	Toshiba	TMM2332	
		TMM333P	
	VTI	VT2332	
NM52264	AMD	AM9265	
	Fairchild	F3568	
		F3569	
		F3570	
	GI	R03-9365	
		R09864	
	GouldAMI	S2364	
		S6364	
	GTEMicro	G5364	
	Hitachi	HN61364	
	Intel	2364A	
	Mitsubishi	M5M2364	
		M5M2365	
		M5M23C64	
	Mostek	MK37000	
	Motorola	MCM68369	
		MCM68370	
	National	MM52264	
	OKI	**MSM3864**	**4733**
	Panasonic	MN2364	
		MN4864	
			(Continued)
NM52264	**RCA**	**CDM5365**	**1673,1677**
	Rockwell	R2364B	
	SSS	SCM23C65	
	Supertex	23SC64	
		23SC64/A	
		CM6400	
	Synertek	SY2365/A	
	TI	TMS2364	
		TMS4764	
	Toshiba	TMM2365	
	UMC	UM2366	
	VTI	VT2365	
NMC2114A	AMD	AM9114	
	Fairchild	F2114	
	Hitachi	HM472114	
	Intel	2114	
		2114A	
	Mitsubishi	M5L2114	
	Motorola	M5L2114	
		MCM2114	
		MCM21L14	
	OKI	MSM2114	
	SSS	SCM2114A	
		SCM21C14	
	Synertek	SY2114	
	Toshiba	TMM2114A	
		TMM314A	
	UMC	UM2114	
◆NMC2116	AMD	AM9128	
		AM9218	
	Cypress	CY7C128	
	Fujitsu	MB8128	
		MB8416	
	Harris	HM6116	
		HM6516	
	IDT	IDT6116	
	Intel	2128	
	MicroPwr	MP6116	
	Mitsubishi	M58275	
		M5M116	
		M5M5116	
		M5M5117	
		M5M5118	
		MS8725	
	Motorola	MCM2016	
		MCM2016H	
		MCM2128	
		MCM6116	**4119**
		MCM61L16	**4119**
		MCM65116	
	National	MMC2116	
	NEC	μPD4016	
	OKI	MSM2128	
		MSM5128	**4732,4733**
	RCA	MWS6116A	
	SSS	883C21C16	
		BCM21C16	
		SCM21C16	
		SCM6116	
	TI	TMS4016	
	ThomsonCSF	ET2128	
	Toshiba	**TC5516A**	**4263**
		TMM2015A	
		TMM2016	
		TMM2016A	**4263**
	Samsung	KM6816	
	UMC	UM2128	
	Universal	US574HC133	
NMC2141	Cypress	CY2147	
		CY7C147	
	Hitachi	HM6147	
	Intel	2141	
		2147	
		2147-3	
	Motorola	MCM6147	
		MCM61L47	
	National	MM2147	
	NEC	MPD2147	
	OKI	MSM5104	
	TI	TMS2147	
	Toshiba	TMM3150	
	UMC	UM2147	
NMC2147H	AMD	AM2147	
	Cypress	CY7C147	
	Hitachi	HM6147H	
	Intel	2147H	
	Motorola	MCM6147	
	NEC	μPD2147A	
NMC2148	AMD	AM2148	
		AM2149	
			(Continued)

◆ Discontinued

The manufacturers report their devices can be used as direct replacements.
Performance details often differ, so compare the specifications considering your requirements.

National Semiconductor (Cont'd)

Manufacturer Device	Replacement Source	Device	IC Master Page
NMC2148	Cypress	CY2148	
		CY2149	
		CY7C148	
		CY7C149	
	Intel	2148H	
		2149H	
	NEC	UPD2149	
	ThomsonCSF	ET2148	
	UMC	UM2148	
		UM2149	
NMC2532	Hitachi	HN462532	
	National	MM2532	
		TDA2530	
		TDA2532	
	Plessey	TDA2530	
	Siemens	TDA2530	
	SiliconG	SG2532	
NMC2564	VTI	VT2366	
NMC2732	AMD	AM2732	
	Hitachi	HN462732	
	Intel	2732	
		2732A	
		M2732	
	National	MM2732	
	Rockwell	R27C32	
	SGS	M2732A	
	Toshiba	TMM324C	
NMC27C256	AMD	AM27256	
	Fujitsu	MBM27256	
		MBM27C256	
	GI	R09256	
	Hitachi	HM4827256	
		HN27256	
		HN27C256	**4037**
	Intel	27256	
		27C256	**4079**
	Mitsubishi	M5L27256	
		MSL27256	
	Motorola	MCM67256	
	NEC	MPD27256	
		UPD27256	
		UPD27C256	
		UPD27C256A	
	SEEQ	27256	
		27C256	
	SGS	M27256	
	SSS	SCM27C128	
	Toshiba	TC57256	
		TMM27256	
		TMM27C256	
	VTI	**VT27C256**	**4265,4273**
NMC27C32	Rockwell	R87C32	
NMC4164	Fairchild	F64K	
	Fujitsu	MB8264A	
		MB8266A	
	Hitachi	HM4864	
	Inmos	IMS2600	
	MicronTech	MT4264	
	Motorola	MCM4164B	
		MCM6665B	
	NEC	μPD4164	
	OKI	MSM3764	
	ThomsonCSF	ET4164	
	Toshiba	TMM4164	
	Samsung	KM4164	
NMC5257A	AMD	AM9044	
NMC5295	**Fairchild**	**F100422**	**4014**
	Fujitsu	MB8118	
		MBM100422	
		MBM100422A	
	Hitachi	HM100422	
		HM4816	
	Intel	2118	
	Mostek	MK4516	
	Motorola	MCM4517	
	National	DM100422	
	NEC	UPB100422	
	Signetics	100422	
		GBX100422	
◆NMC6503	Rockwell	R6503	
	Synertek	SY6503	
NMC6504	GouldAMI	6504	
	Harris	HM6504	
	Hitachi	4315	
		6147	
	Mitsubishi	58981	
	Motorola	6504	
	OKI	5104	

(Continued)

Manufacturer Device	Replacement Source	Device	IC Master Page
NMC6504	RCA	CDM5104	
	Rockwell	R6504	
	Synertek	SY6504	
	Toshiba	TC5504	
◆NMC6514	Harris	HM6514	
	Hitachi	6148	
		HM4334	
	Mitsubishi	58981	
	Motorola	6514	
	NEC	444	
	OKI	5114	
	RCA	MWS5514	
	Rockwell	R6514	
	Synertek	SY6514	
	Toshiba	TC5514	
◆NMC6518	GouldAMI	6518	
	Harris	HM6518	
	MicroPwr	6518	
	Motorola	6518	
	National	MM74C930	
NMC9306	GI	ER59256	
	National	COP494	
	NCR	**NCR59306**	**4128**
NMC9346	GI	ER5911	
	Hyundai	HY93C46	
	National	COP495	
	NCR	59346	
		NCR59308	**4128**
	SGS	M9346	
	Sierra	SC22011	
◆NMC9716	Rockwell	R5213/2816	
	Samsung	KM2816	
NMC9716E	Rockwell	R5213	
NS32016	TI	TI32016	
		TMS32016	
NS32032	TI	TI32032	
		TMS32032	
NS32081	TI	TI32081	
		TMS32081	
NS32082	TI	TI32082	
NS32201	TI	TI32201	
NS32202	TI	TI32202	
		TMS32202	
NS32456	Fairchild	F68456	
NS32488	Fairchild	F681488	
NS80CX48	Intel	8748	
	NEC	μPD8748	
NSC800	SMC	MPU800	
NSC810	SMC	MPU810	
NSC830	SMC	MPU830	
NSC831	SMC	MPU831	
PAL10H8	MMI	PAL10H8	
PAL10L8	MMI	PAL10L8	
PAL12H6	MMI	PAL12H6	
PAL12L10	MMI	PAL12L10	
PAL12L6	MMI	PAL12L6	
PAL14H4	MMI	PAL14H4	
PAL14L4	MMI	PAL14L4	
PAL14L8	AMD	AMPAL22V10	
	Cypress	PALC22U10	
	MMI	PAL14L8	
PAL16A4	MMI	PAL16A4	
PAL16C1	MMI	PAL16C1	
PAL16H2	MMI	PAL16H2	
PAL16H6	MMI	PAL16H6	
PAL16L2	MMI	PAL16L2	
PAL16L6	MMI	PAL16L6	
PAL16R4	AMD	AMPAL16R4	
	Cypress	CYPAL16R4	
	MMI	PAL16R4	
		PAL16R4A	
	TI	**PAL16R4A**	**725**
		TIBPAL16R4-20	
		TIBPAL16R4-25	**725,4759**
		TIBPAL16R4-30	
PAL16R6	AMD	AMPAL16R6	
	Cypress	CYPAL16R6	
	MMI	PAL16R6	
		PAL16R6A	
	TI	**PAL16R6A**	**725**
		TIBPAL16R6-20	
		TIBPAL16R6-25	**725,4759**
		TIBPAL16R6-30	
PAL16X4	MMI	PAL16X4	
PAL18H4	MMI	PAL18H4	
PAL18L4	MMI	PAL18L14	
PAL20C1	AMD	AMPAL22V10	
	MMI	PAL20C1	
PAL20H2	MMI	PAL20H2	

Manufacturer Device	Replacement Source	Device	IC Master Page
PAL20L10	Cypress	PAL20L10	
	MMI	PAL20L10	
PAL20L2	AMD	AMPAL22V10	
	MMI	PAL20L2	
PAL20X10	AMD	AMPAL22V10	
	MMI	PAL20X10	
PAL20X4	AMD	AMPAL22V10	
	MMI	PAL20X4	
PAL20X8	AMD	AMPAL22V10	
	MMI	PAL20X8	
PAL26L6	AMD	AMPAL22V10	
	MMI	PAL26L6	
S82S117	National	S82S117	
	Signetics	S82S17	
S82S17	National	S82S117	
	Signetics	S82S17	
SCX6212	**LSILogic**	**LL7140**	**4676**
	Toshiba	**TC17G014**	**4799**
SCX6224	**LSILogic**	**LL7220**	**4676**
	National	SCX6225	
	Toshiba	**TC17G022**	**4799**
SCX6225	**LSILogic**	**LL7220**	**4676**
	National	SCX6224	
	Toshiba	**TC17G022**	**4799**
SCX6248	**LSILogic**	**LL7420**	**4676**
	Toshiba	**TC17G042**	**4799**
SCX6260	**LSILogic**	**LL7600**	**4676**
	Toshiba	TC17G060	
SCX6306	**LSILogic**	**LL5080**	**4676**
	Motorola	**HCA6306**	**4718**
	RCA	PAS0800	
	Toshiba	**TC15G008**	**4799**
SCX6312	**LSILogic**	**LL5140**	**4676**
	Motorola	**HCA6312**	**4718**
	RCA	**PA51400**	**4742**
	Toshiba	**TC15G014**	**4799**
SCX6324	**LSILogic**	**LL5220**	**4676**
	Motorola	**HCA6324**	**4718**
	National	SCX6325	
	RCA	**PA52200**	**4742**
	Toshiba	**TC15G022**	**4799**
SCX6325	**LSILogic**	**LL5220**	**4676**
	Motorola	**HCA6324**	**4718**
	National	SCX6324	
	RCA	**PA52200**	**4742**
	Toshiba	**TC15G022**	**4799**
SCX6348	**LSILogic**	**LL5420**	**4676**
	Motorola	**HCA6348**	**4718**
	RCA	**PA54200**	**4742**
	Toshiba	**TC15G042**	**4799**
SCX6360	**LSILogic**	**LL5600**	**4676**
SG75464	Motorola	MC75404	
	National	DS75464	
	SiliconG	SG75464	
	TI	SN75464	
TBA120	Siemens	TBA120	
	Telefunken	TBA120	
◆TBA440	Plessey	TBA440	
	Siemens	TBA440	
◆TBA530	Plessey	TBA530	
	Telefunken	TBA530	
◆TBA540	Plessey	TBA540	
	Telefunken	TBA540	
◆TBA560	Plessey	TBA560	
	Telefunken	TBA560	
TBA950	ITT	TBA950	
◆TBA990	Plessey	TBA990	
TDA2522	Plessey	TDA2522	
	Siemens	TDA2522	
TDA2523	Plessey	TDA2523	
TDA2530	Hitachi	HN462532	
	National	MM2532	
		NMC2532	
		TDA2532	
	Plessey	TDA2530	
	Siemens	TDA2530	
	SiliconG	SG2532	
TDA2532	Hitachi	HN462532	
	National	MM2532	
		NMC2532	
		TDA2530	
	Plessey	TDA2530	
	Siemens	TDA2530	
	SiliconG	SG2532	
TDA2560	Plessey	TDA2560	
	Siemens	TDA2560	
TDA2591	Telefunken	TDA2591	
TDA2593	Plessey	TDA2593	
	Signetics	**TDA2593**	**3731**
	Telefunken	TDA2593	
	ThomsonCSF	TDA2593	

Manufacturer Device	Replacement Source	Device	IC Master Page
TDA440	Plessey	TDA440	
	SGS	TDA440	
TP3020	**Harris**	**HC5510**	**3595**
	Intel	ID2910	
TP3021	**Harris**	**HC5511**	**3595**
	Intel	ID2911	
TP3040	GTEMicro	G8912B	
	Harris	**HC5512**	**3596**
	Intel	2912	
		ID2912	
	Plessey	MV8912	
	SGS	M5912	
	TI	TCM2912B	
TP3054	**Fairchild**	**μA3054**	**3575**
	Harris	**HC5554**	**3595**
	Sierra	SC11301	
	Sprague	ULN-3054	
TP3057	**Fairchild**	**μA3057**	**3575**
	Harris	**HC5557**	**3595**
	Sierra	SC11302	
TP5094	Mostek	MK5094	
TP50981	CTI	52981	
	Mostek	MK50981	
	Samsung	MK50981	
TP50982	Mostek	MK50982	
TP5116	Fairchild	5116	
	Mostek	MK5116	
	SGS	M5116	
TP5156	CTI	MA556	
	Fairchild	5156	
	Mostek	MK5156	
	SGS	M5156	

NCR Corp., Microelectronics Div.

Manufacturer Device	Replacement Source	Device	IC Master Page
59306	GI	ER59256	
	SGS	M9306	
59346	GI	ER5911	
	Hyundai	HY93C46	
	National	COP495	
		NMC9346	
	NCR	**NCR59308**	**4128**
	SGS	M9346	
	Sierra	SC22011	
MCR5380	AMD	AMD5380	
MCR8386	Western	WD5386	
◆NCR1400	GI	ER1400	
◆NCR2051	GI	ER2051	
NCR23128	AMD	AM92128	
	GI	R09128	
		SPR-128	
	GouldAMI	S23128	
		S3630A	
	GTEMicro	G53128	
	Hitachi	HN613128	
		HN613128P	
	Mitsubishi	M5M23128	
	Motorola	MCM63128	
	NEC	UPD23128	
		UPD23128A	
		UPD23128E	
		UPD23C128	
		UPD23C128E	
	RCA	**CDM53128**	**1673,1677**
	Rockwell	R23128	
	Signetics	23128	
	SSS	SCM23C128	
	Supertex	CM1310	
	Synertek	SY23128	
	Toshiba	TMM23128	
	UMC	UM23128	
	VTI	23131	
		VT23128	
		VT23129	
		VT23129A	
		VT23130	
		VT23138	
NCR23256	AMD	AM92256	
	Fujitsu	MB83256	
	GI	R09256	
	GouldAMI	S23256	
		S38256	
	GTEMicro	G53256	
	Hitachi	HN613256	
	Mitsubishi	M5M23256	
	Mostek	MK38000	
	Motorola	MCM63256	
		MCM65256	
	NCR	NCR23257	
	NEC	UPD23256	

(Continued)

◆ Discontinued

Bold face device numbers indicate manufacturers data is provided in the IC Master on the pages noted.

NCR Corp., Microelectronics Div. (Cont'd)

Manufacturer Device	Replacement Source	Device	IC Master Page
NCR23256	NEC	UPD23256A	
		UPD23C256E	
	OKI	**MSM38256**	**4733**
	Panasonic	MN23256	
		MN23257	
	RCA	CDM52356	
		CDM53256	**1673.1678**
	S-MOS	**SMM2326**	**4178**
		SMM6325	**4178**
		SMM6326	**4178**
	Signetics	23256	
		23256A	
	SSS	SCM23C256	
	Supertex	CM2560	
	Toshiba	**TMM23256**	**4263**
	UMC	UM23256	
	VTI	23257	
		VT23256	
		VT23257	
NCR23257	AMD	AM92256	
	Fujitsu	MB83256	
	GI	R09256	
	GouldAMI	S23256	
		S38256	
	GTEMicro	G53256	
	Hitachi	HN613256	
	Mitsubishi	M5M23256	
	Mostek	MK38000	
	Motorola	MCM63256	
		MCM65256	
	NCR	NCR23256	
	NEC	UPD23256	
		UPD23256A	
		UPD23C256E	
	OKI	**MSM38256**	**4733**
	Panasonic	MN23256	
		MN23257	
	RCA	CDM52356	
		CDM53256	**1673.1678**
	S-MOS	**SMM2326**	**4178**
		SMM6325	**4178**
		SMM6326	**4178**
	Signetics	23256	
		23256A	
	SSS	SCM23C256	
	Supertex	CM2560	
	Toshiba	**TMM23256**	**4263**
	UMC	UM23256	
	VTI	23257	
		VT23256	
		VT23257	
NCR2332	AMD	AM9232	
	CSG	MPS2332	
	Fairchild	F3532	
	GI	R03-9332	
	GouldAMI	S2333	
		S68A332	
	GTEMicro	G2332	
	Hitachi	HN46332	
	Intech	IM7332	
	Intel	2332	
	Mitsubishi	M58333	
	Motorola	**MCM68A332**	**4120**
	National	NM52132	
	NEC	UPD2332A	
	Panasonic	MN2332	
	RCA	**CDM5333**	**1673.1677**
	Rockwell	R2332	
	SGS	M2332	
	Sharp	LH2332	
	Siemens	SA88332	
		SAB8332	
	Signetics	2332	
		2632A	
	SiliconG	SG3532	
	SSS	SCM23C32	
	SMC	ROM4732	
	Supertex	23SC32	
		CM3200	
	Synertek	SY2332	
	TI	TM2332	
		TMS2332	
		TMS4732	
	Toshiba	TMM2332	
		TMM333P	
	VTI	VT2332	

Manufacturer Device	Replacement Source	Device	IC Master Page
NCR2364	AMD	AM9264	
	GouldAMI	S2364	
		S68A364	
	Hitachi	HN48364	
	Motorola	**MCM68364**	**4120**
	OKI	**MSM3864**	**4733**
	Plessey	SL2364C	
	S-MOS	**SMM2364**	**4178**
	Sharp	LH2364A	
	Signetics	2364	
	Synertek	SYM2364	
	TI	TMS2364	
		TMS4764	
	Toshiba	TMM2364	
	VTI	VT2364	
	Weitek	SC8164	
NCR2365	AMD	AM9264	
	GouldAMI	S68364	
	Motorola	**MCM68364**	**4120**
		MCM68365	**4120**
		MCM68366	**4120**
	NEC	UPD2364E	
	Rockwell	R2364	
	Signetics	2364	
		2664	
	VTI	VT2365	
◆NCR3400	GI	ER3400	
	Hughes	HNVM3104A	
NCR52004	Intel	2004	
	Xicor	**X2004**	**735.4277**
NCR52210	**Xicor**	**X2210**	**735.4276**
NCR52212	**Xicor**	**X2212**	**735.4276**
NCR52801	GI	ER59256	
NCR52832	Motorola	MCM2833	
	SEEQ	52B23	
		52B23H	
NCR59306	GI	ER59256	
	National	COP494	
		NMC9306	
NCR59308	GI	ER5911	
	Hyundai	HY93C46	
	National	COP495	
		NMC9346	
	NCR	59346	
	SGS	M9346	
	Sierra	SC22011	
NCR6500/1	Rockwell	R6500/1	
NCR6500/11	Rockwell	R6500/11	
NCR65C02	**GTEMicro**	**G65SC02**	**1615**
	Rockwell	R65C02	
NCR8489	GI	AY3-8913	
	TI	SN76489	

NEC Electronics

Manufacturer Device	Replacement Source	Device	IC Master Page
443	Fujitsu	8401	
	GouldAMI	6508	
	Harris	HM6508	
	Intersil	6508	
		IM6508-1	
	MicroPwr	6508	
	National	6508	
		74C929	
	RCA	6508	
	Toshiba	5508	
444	Harris	HM6514	
	Hitachi	6148	
		HM4334	
	Mitsubishi	58981	
	Motorola	6514	
	OKI	5114	
	RCA	MWS5514	
	Rockwell	R6514	
	Synertek	SY6514	
	Toshiba	TC5514	
MPC251	Fairchild	UA1458HC	
	Harris	CM1458	
		HA5102	
	MicroPwr	MPOP14	
	Motorola	**MC1458**	**3617**
	National	LF412	
	PMI	OP14	
	RCA	**CA1458**	**3672**
	SGS	MC1458	
	Signetics	**SA1458**	**3729**
	ThomsonCSF	μA1458	
	Samsung	**MC1458**	**3679**
		MC4558	**3679**
MPD2147	Cypress	CY2147	
		CY7C147	
	Hitachi	HM6147	
	Intel	2141	

(Continued)

Manufacturer Device	Replacement Source	Device	IC Master Page
MPD2147	Intel	2147	
		2147-3	
	Motorola	MCM6147	
		MCM61L47	
	National	MM2147	
		NMC2141	
	OKI	MSM5104	
	TI	TMS2147	
	Toshiba	TMM3150	
	UMC	UM2147	
MPD27256	AMD	AM27256	
	Fujitsu	MBM27256	
		MBM27C256	
	GI	R09256	
	Hitachi	HM4827256	
		HN27256	
		HN27C256	**4037**
	Intel	27256	
		27C256	**4079**
	Mitsubishi	M5L27256	
		MSL27256	
	Motorola	MCM67256	
	National	NMC27C256	
	NEC	UPD27256	
		UPD27C256	
		UPD27C256A	
	SEEQ	27256	
		27C256	
	SGS	M27256	
	SSS	SCM27C128	
	Toshiba	TC57256	
		TMM27256	
		TMM27C256	
	VTI	**VT27C256**	**4265.4273**
MPD27C1000	AMD	AM27C1024	
	Fujitsu	MBM27C1024	
MPD27C512	AMD	AM27512	
	Fujitsu	MBM27512	
		MBM27C512	
	Hitachi	HN27512	
	Intel	**27512**	**4076**
	Mitsubishi	M5L27512	
	Toshiba	**TMM27512**	**4263**
MPD41257	AMD	MCM6256	
	AT&T	WCM41256	
	Fujitsu	MB81256	
	Hitachi	HM50256	
		HM50257	
	MicronTech	MT1256	
	Mitsubishi	M5M4256	
		MSM4257	
	Motorola	MCM6256	
		MCM6257	
	NEC	μPD41256	
	OKI	M5M37256	
		MSM37256	
		MSM41256	
	Panasonic	MM41256	
	TI	TMS4257	
	Toshiba	TMM41256	
	Samsung	KM1256	
MPD4361	Cypress	CY7C187	
	Fairchild	F1600	
	Hitachi	HM6287	
		HM6787	**4035**
	Inmos	IMS1600	
	IDT	IDT7187	
	Motorola	MCM6287	
	RCA	**CD74HC4515**	**1150**
	SGS	M74HC4515	
	Signetics	PC74HC4515	
	Toshiba	TC5561	
		TC5562	
MPD4362	Cypress	CY7C164	
	Hitachi	HD74HC595	
	Inmos	IMS1620	
	Motorola	MC74HC595	
	SGS	M74HC595	
	TI	SN74HC595	
	Universal	US74HC595	
MPD4363	Cypress	CY7C166	
	Fairchild	**54LS152**	**613**
	SGS	T54LS152	
TL494	NEC	μPD494	
UPB100422	**Fairchild**	**F100422**	**4014**
	Fujitsu	MB8118	
		MBM100422	
		MBM100422A	
	Hitachi	HM100422	
		HM4816	
	Intel	2118	

(Continued)

Manufacturer Device	Replacement Source	Device	IC Master Page
UPB100422	Mostek	MK4516	
	Motorola	MCM4517	
	National	DM100422	
		NMC5295	
	Signetics	100422	
		GBX100422	
UPB100470	AMD	AM100470	
	Fujitsu	MBM100470A	
	Signetics	100470	
		GBX100470	
UPB100474	AMD	AM100474	
	Fairchild	F100474	
	Fujitsu	MBM100474	
		MBM100474A	
	Hitachi	100474	
		HM100474	
	Signetics	100474	
UPB100480	AMD	AM100480	
	Fairchild	F100480	
	Fujitsu	MBM100480	
	Hitachi	HM100480	
UPB10422	**Fairchild**	**F10422**	**4014**
	Fujitsu	MBM10422A	
	Motorola	**MCM10422**	**4123**
	National	DM10422	
	Signetics	10422	
UPB10470	AMD	AM10470	
	Fujitsu	MBM10470A	
	Hitachi	HM10470	
		HM2142	
	Motorola	MCM10470	
	National	DM10470	
	Signetics	10470	
UPB10474	AMD	AM10474	
	Fairchild	F10474	
	Fujitsu	MBM10474A	
	Hitachi	HM10474	
	Motorola	**MCM10474**	**4123**
	National	DM10474	
	Signetics	10474	
UPB10480	AMD	AM10480	
	Fairchild	F10480	
	Fujitsu	**MBM10480**	**4021**
	Hitachi	HM10480	
UPB426	AMD	AM27S33	
	Fairchild	93453	
	Fujitsu	MB7122	
	Hitachi	HN25045	
	MMI	5353-1	
		535441	
		6353-1	
		63S441	**4101.4102**
		G35441	
	Motorola	**MCM7643**	**4124**
	National	DM74S573	
	Signetics	N72HS137	
		N825137	
		N82S137	**4166**
		S82S195	
	TI	TBP24S41	
UPB8289	**Fujitsu**	**MBL8289**	**1611**
	Harris	**82C89**	**682.1619.1623.1631**
	Intel	8289	
	Nitron	NC82C89	
UPC264	AD	AD517	
		OP-07	
	Fairchild	UA714	
	Harris	HA-OP07	
		HA5130	
		HA5135	
	LinearTech	OP-07	
	Micra	MC0021	
	MicroPwr	MPOP07	
	PMI	OP07	
	Raytheon	OP07	
	TI	OP07D	
UPC4081	AnalogSys	MA333	
	Fairchild	UA771	
	Motorola	**MC34001**	**3616**
	TI	TL071	
		TL081C	
UPC4082	AnalogSys	MA336	
	Fairchild	UA772	
	Harris	HA5082	
	Motorola	**MC34002**	**3617**
	TI	TL072	
		TL082C	
UPC4084	AnalogSys	MA374	
	Fairchild	UA774	
	Motorola	**MC33074**	**3618**
		MC34004	**3618**

(Continued)

◆ Discontinued

The manufacturers report their devices can be used as direct replacements.
Performance details often differ, so compare the specifications considering your requirements.

© IC MASTER

NEC Electronics (Cont'd)

Manufacturer Device	Replacement Source	Device	IC Master Page
UPC4084	Motorola	MC34004A	
		MC34074	**3618**
	TI	TL074	
		TL084BC	
UPD2149	AMD	AM2148	
		AM2149	
	Cypress	CY2148	
		CY2149	
		CY7C148	
		CY7C149	
	Intel	2148H	
		2149H	
	National	NMC2148	
	ThomsonCSF	ET2148	
	UMC	UM2148	
		UM2149	
UPD2167	AMD	AM2167	
	Cypress	CY7C167	
	Fujitsu	MB8167A	
		MB81C67	
	Harris	HM65262	
	Hitachi	HM6167	
		HM6167H	
		HM6267	
	Inmos	IMS1400	
		IMS1403	**4042**
	IDT	IDT6167	
	Intel	51C67	
	Mitsubishi	M5M2167	
	Motorola	MCM2167H	
UPD23100	Fujitsu	MB831000	
		MB831124	
	GI	R091000	
	Hitachi	HN62301	
	NEC	UPD231000	
	Toshiba	TC531000	
UPD231000	Fujitsu	MB831000	
		MB831124	
	GI	R091000	
	Hitachi	HN62301	
	NEC	UPD23100	
	Toshiba	TC531000	
UPD23128	AMD	AM92128	
	GI	R09128	
		SPR-128	
	GouldAMI	S23128	
		S3630A	
	GTEMicro	G53128	
	Hitachi	HN613128	
		HN613128P	
	Mitsubishi	M5M23128	
	Motorola	MCM63128	
	NCR	NCR23128	
	NEC	UPD23128A	
		UPD23128E	
		UPD23C128	
		UPD23C128E	
	RCA	**CDM53128**	**1673,1677**
	Rockwell	R23128	
	Signetics	23128	
	SSS	SCM23C128	
	Supertex	CM1310	
	Synertek	SY23128	
	Toshiba	TMM23128	
	UMC	UM23128	
	VTI	23131	
		VT23128	
		VT23129	
		VT23129A	
		VT23130	
		VT23138	
UPD23128A	AMD	AM92128	
	GI	R09128	
		SPR-128	
	GouldAMI	S23128	
		S3630A	
	GTEMicro	G53128	
	Hitachi	HN613128	
		HN613128P	
	Mitsubishi	M5M23128	
	Motorola	MCM63128	
	NCR	NCR23128	
	NEC	UPD23128	
		UPD23128E	
		UPD23C128	
		UPD23C128E	
	RCA	**CDM53128**	**1673,1677**
	Rockwell	R23128	
			(Continued)
UPD23128A	Signetics	23128	
	SSS	SCM23C128	
	Supertex	CM1310	
	Synertek	SY23128	
	Toshiba	TMM23128	
	UMC	UM23128	
	VTI	23131	
		VT23128	
		VT23129	
		VT23129A	
		VT23130	
		VT23138	
UPD23128E	AMD	AM92128	
	GI	R09128	
		SPR-128	
	GouldAMI	S23128	
		S3630A	
	GTEMicro	G53128	
	Hitachi	HN613128	
		HN613128P	
	Mitsubishi	M5M23128	
	Motorola	MCM63128	
	NCR	NCR23128	
	NEC	UPD23128	
		UPD23128A	
		UPD23C128	
		UPD23C128E	
	RCA	**CDM53128**	**1673,1677**
	Rockwell	R23128	
	Signetics	23128	
	SSS	SCM23C128	
	Supertex	CM1310	
	Synertek	SY23128	
	Toshiba	TMM23128	
	UMC	UM23128	
	VTI	23131	
		VT23128	
		VT23129	
		VT23129A	
		VT23130	
		VT23138	
UPD23256	AMD	AM92256	
	Fujitsu	MB83256	
	GI	R09256	
	GouldAMI	S23256	
		S38256	
	GTEMicro	G53256	
	Hitachi	HN613256	
	Mitsubishi	M5M23256	
	Mostek	MK38000	
	Motorola	MCM63256	
		MCM65256	
	NCR	NCR23256	
		NCR23257	
	NEC	UPD23256A	
		UPD23C256E	
	OKI	**MSM38256**	**4733**
	Panasonic	MN23256	
		MN23257	
	RCA	CDM52356	
		CDM53256	**1673,1678**
	S-MOS	**SMM2326**	**4178**
		SMM6325	**4178**
		SMM6326	**4178**
	Signetics	23256	
		23256A	
	SSS	SCM23C256	
	Supertex	CM2560	
	Toshiba	**TMM23256**	**4263**
	UMC	UM23256	
	VTI	23257	
		VT23256	
		VT23257	
UPD23256A	AMD	AM92256	
	Fujitsu	MB83256	
	GI	R09256	
	GouldAMI	S23256	
		S38256	
	GTEMicro	G53256	
	Hitachi	HN613256	
	Mitsubishi	M5M23256	
	Mostek	MK38000	
	Motorola	MCM63256	
		MCM65256	
	NCR	NCR23256	
		NCR23257	
	NEC	UPD23256	
		UPD23C256E	
	OKI	**MSM38256**	**4733**
	Panasonic	MN23256	
			(Continued)
UPD23256A	Panasonic	MN23257	
	RCA	CDM52356	
		CDM53256	**1673,1678**
	S-MOS	**SMM2326**	**4178**
		SMM6325	**4178**
		SMM6326	**4178**
	Signetics	23256	
		23256A	
	SSS	SCM23C256	
	Supertex	CM2560	
	Toshiba	**TMM23256**	**4263**
	UMC	UM23256	
	VTI	23257	
		VT23256	
		VT23257	
UPD23328	Amperex	AM9233	
	CSG	MPS2333	
	Fairchild	F3533	
	GI	R03-9333	
	GouldAMI	S2333	
	RCA	**CDM5332**	**1673,1677,1678**
	Signetics	2332	
	SSS	SCM23C33	
	Supertex	23C32	
	Synertek	SY2333	
	Toshiba	TMM2332	
	Universal	UM2333	
UPD2332A	AMD	AM9232	
	CSG	MPS2332	
	Fairchild	F3532	
	GI	R03-9332	
	GouldAMI	S2333	
		S68A332	
	GTEMicro	G2332	
	Hitachi	HN46332	
	Intech	IM7332	
	Intel	2332	
	Mitsubishi	M58333	
	Motorola	**MCM68A332**	**4120**
	National	NM52132	
	NCR	NCR2332	
	Panasonic	MN2332	
	RCA	**CDM5333**	**1673,1677**
	Rockwell	R2332	
	SGS	M2332	
	Sharp	LH2332	
	Siemens	SA88332	
		SAB8332	
	Signetics	2332	
		2632A	
	SiliconG	SG3532	
	SSS	SCM23C32	
	SMC	ROM4732	
	Supertex	23SC32	
		CM3200	
	Synertek	SY2332	
	TI	TM2332	
		TMS2332	
		TMS4732	
	Toshiba	TMM2332	
		TMM333P	
	VTI	VT2332	
UPD2364	AMD	9264	
	GI	R03-9364	
	GouldAMI	S68A364	
	Hitachi	HN48364	
	Intech	IM7364	
	MicroPwr	MP2364C	
	Mitsubishi	M58334	
	Mostek	MK36000	
	Motorola	**MCM68364**	**4120**
		MCM68365	**4120**
		MCM68366	**4120**
	National	MM52164	
	Rockwell	R2364A	
	SGS	M2362	
		M36000	
	Signetics	2664	
		26S64	
	SSS	SCM23C64	
	SMC	ROM36000	
	Synertek	SY2364/A	
	TI	TMS4764	
	Toshiba	TMM2366	
UPD2364E	AMD	AM9264	
	GouldAMI	S68364	
	Motorola	**MCM68364**	**4120**
		MCM68365	**4120**
		MCM68366	**4120**
			(Continued)
UPD2364E	NCR	NCR2365	
	Rockwell	R2364	
	Signetics	2364	
		2664	
	VTI	VT2365	
UPD23C1000	**Motorola**	**MC54HC195**	**1128**
	National	MM54HC195	
	RCA	**CD54HC195**	**1149**
	Signetics	54HC195	
	TI	**SN54HC195**	**714**
	VTI	**VT231024**	**4265**
UPD23C128	AMD	AM92128	
	GI	R09128	
		SPR-128	
	GouldAMI	S23128	
		S3630A	
	GTEMicro	G53128	
	Hitachi	HN613128	
		HN613128P	
	Mitsubishi	M5M23128	
	Motorola	MCM63128	
	NCR	NCR23128	
	NEC	UPD23128	
		UPD23128A	
		UPD23128E	
		UPD23C128E	
	RCA	**CDM53128**	**1673,1677**
	Rockwell	R23128	
	Signetics	23128	
	SSS	SCM23C128	
	Supertex	CM1310	
	Synertek	SY23128	
	Toshiba	TMM23128	
	UMC	UM23128	
	VTI	23131	
		VT23128	
		VT23129	
		VT23129A	
		VT23130	
		VT23138	
UPD23C128E	AMD	AM92128	
	GI	R09128	
		SPR-128	
	GouldAMI	S23128	
		S3630A	
	GTEMicro	G53128	
	Hitachi	HN613128	
		HN613128P	
	Mitsubishi	M5M23128	
	Motorola	MCM63128	
	NCR	NCR23128	
	NEC	UPD23128	
		UPD23128A	
		UPD23128E	
		UPD23C128	
	RCA	**CDM53128**	**1673,1677**
	Rockwell	R23128	
	Signetics	23128	
	SSS	SCM23C128	
	Supertex	CM1310	
	Synertek	SY23128	
	Toshiba	TMM23128	
	UMC	UM23128	
	VTI	23131	
		VT23128	
		VT23129	
		VT23129A	
		VT23130	
		VT23138	
UPD23C256E	AMD	AM92256	
	Fujitsu	MB83256	
	GI	R09256	
	GouldAMI	S23256	
		S38256	
	GTEMicro	G53256	
	Hitachi	HN613256	
	Mitsubishi	M5M23256	
	Mostek	MK38000	
	Motorola	MCM63256	
		MCM65256	
	NCR	NCR23256	
		NCR23257	
	NEC	UPD23256	
		UPD23256A	
	OKI	**MSM38256**	**4733**
	Panasonic	MN23256	
		MN23257	
	RCA	CDM52356	
		CDM53256	**1673,1678**
			(Continued)

◆ Discontinued

Bold face device numbers indicate manufacturers data is provided in the IC Master on the pages noted.

ALTERNATE SOURCE DIRECTORY

NEC Electronics (Cont'd)

Manufacturer Device	Replacement Source	Device	IC Master Page
UPD23C256E	**S-MOS**	**SMM2326**	**4178**
		SMM6325	**4178**
		SMM6326	**4178**
	Signetics	23256	
		23256A	
	SSS	SCM23C256	
	Supertex	CM2560	
	Toshiba	**TMM23256**	**4263**
	UMC	UM23256	
	VTI	23257	
		VT23256	
		VT23257	
UPD27256	AMD	AM27256	
	Fujitsu	MBM27256	
		MBM27C256	
	GI	R09256	
	Hitachi	HM4827256	
		HN27256	
		HN27C256	**4037**
	Intel	27256	
		27C256	**4079**
	Mitsubishi	M5L27256	
		MSL27256	
	Motorola	MCM67256	
	National	NMC27C256	
	NEC	MPD27256	
		UPD27C256	
		UPD27C256A	
	SEEQ	27256	
		27C256	
	SGS	M27256	
	SSS	SCM27C128	
	Toshiba	TC57256	
		TMM27256	
		TMM27C256	
	VTI	**VT27C256**	**4265,4273**
UPD2764	AMD	AM2764	
	Fujitsu	MBM2764	
		MBM27C64	
	Hitachi	HM482764	
		HN2764	
		HN27C64	
		HN482764	
	Intel	2764	
		2764A	
		27C64	**4078**
		87C64	**4078**
	Mitsubishi	M5L2764	
	NEC	UPD27C64	
	OKI	MSM2764	
		MSM2764A	**4732**
		MSM27C64	
	Rockwell	R2764	
		R27C64	
		R87C64	
	S-MOS	SPM27C64	
	SEEQ	2764	
		5133	
	SGS	M2764	
	Signetics	27C64	
	SSS	SCM27C64	
	TI	TMS27C64	
	ThomsonCSF	ET2764	
	Toshiba	**TMM2764**	**4263**
UPD27C256	AMD	AM27256	
	Fujitsu	MBM27256	
		MBM27C256	
	GI	R09256	
	Hitachi	HM4827256	
		HN27256	
		HN27C256	**4037**
	Intel	27256	
		27C256	**4079**
	Mitsubishi	M5L27256	
		MSL27256	
	Motorola	MCM67256	
	National	NMC27C256	
	NEC	MPD27256	
		UPD27256	
		UPD27C256A	
	SEEQ	27256	
		27C256	
	SGS	M27256	
	SSS	SCM27C128	
	Toshiba	TC57256	
		TMM27256	
		TMM27C256	
	VTI	**VT27C256**	**4265,4273**
UPD27C256A	AMD	AM27256	
	Fujitsu	MBM27256	
		MBM27C256	
	GI	R09256	
	Hitachi	HM4827256	
		HN27256	
		HN27C256	**4037**
	Intel	27256	
		27C256	**4079**
	Mitsubishi	M5L27256	
		MSL27256	
	Motorola	MCM67256	
	National	NMC27C256	
	NEC	MPD27256	
		UPD27256	
		UPD27C256	
	SEEQ	27256	
		27C256	
	SGS	M27256	
	SSS	SCM27C128	
	Toshiba	TC57256	
		TMM27256	
		TMM27C256	
	VTI	**VT27C256**	**4265,4273**
UPD27C64	AMD	AM2764	
	Fujitsu	MBM2764	
		MBM27C64	
	Hitachi	HM482764	
		HN2764	
		HN27C64	
		HN482764	
	Intel	2764	
		2764A	
		27C64	**4078**
		87C64	**4078**
	Mitsubishi	M5L2764	
	NEC	UPD2764	
	OKI	MSM2764	
		MSM2764A	**4732**
		MSM27C64	
	Rockwell	R2764	
		R27C64	
		R87C64	
	S-MOS	SPM27C64	
	SEEQ	2764	
		5133	
	SGS	M2764	
	Signetics	27C64	
	SSS	SCM27C64	
	TI	TMS27C64	
	ThomsonCSF	ET2764	
	Toshiba	**TMM2764**	**4263**
UPD41254	NEC	UPD41464	
	TI	TMS4464	
UPD41257	Fujitsu	MB81257	
	Hitachi	HM50257	
	Mitsubishi	MSM4257	
	TI	TMS4257	
	Toshiba	TMM41257	
UPD41464	NEC	UPD41254	
	TI	TMS4464	
UPD41464C	Fujitsu	MB81464	
	Hitachi	HM50464	
	Mitsubishi	MSM4464P	
	Toshiba	TMM41464	
UPD43256	Fujitsu	MB84256	
	Hitachi	HM62256	
UPD71054	**Harris**	**82C54**	**682,1619,1620,1631**
		CP82C54	
	Intel	8254	
		82C54	
	Nitron	NC82C54	
	OKI	82C54	
	S-MOS	SMC82C54AC	
UPD71055	Harris	82C55	
		CP82C55A	
	Intel	8255	
		82C55	
		P8255	
	NEC	UPD8255A	
	OKI	82C55	
		MSM82C55A	**4732**
	S-MOS	SMC82C55AC	
	Toshiba	TMP8255	
		TMP82C55	**1750**
UPD71082	**Fujitsu**	**MBL8282**	**1611**
	Harris	**82C82**	**682,1619,1622,1631**
	Intel	8282	
		82C82	
	NEC	μPB8282	
	Nitron	NC82C82	
	OKI	82C82	
UPD71083	**Harris**	**82C83**	**1619,1622**
	Intel	82C83	
	Nitron	NC82C83	
	OKI	82C83	
UPD71084	AMD	8284	
	Fujitsu	MBL8284	
	Harris	82C84	
		82C84A	**682,1619,1623,1631**
	Intel	8284	
		82C84	
		82C84A	
	NEC	μPB8284	
	Nitron	NC82C84A	
UPD71088	AMD	8288	
	Fujitsu	**MBL8288**	**1611**
	Harris	**82C88**	**682,1619,1623,1631**
	Intel	8288	
		82C88	
	NEC	μPB8288	
	Nitron	NC82C88	
	OKI	82C88	
UPD72065	NEC	UPD7654A-2	
	SMC	FDC765A	
	Zilog	Z765A	
UPD72066	Intel	8272	
	Rockwell	R6765	
UPD7210	NEC	μPD7210	
	SMC	COM7210	
UPD7220A	SMC	CRT7220	
UPD7261A	SMC	HDC7261	
UPD7654A-2	NEC	UPD72065	
	SMC	FDC765A	
	Zilog	Z765A	
UPD7720	**GouldAMI**	**S7720**	**3588**
UPD8237A-5	Intel	8237-5	
UPD8243	Intel	8243	
	Toshiba	**TMP8243**	**1750**
UPD8251A/AF	AMD	8251	
	Intel	P8251	
	OKI	**MSM82C51A**	**4732**
	S-MOS	SMC82C51AC	
	Toshiba	TMP8251	
UPD8253-2/-5	AMD	8253	
	Intel	8253	
	National	INS8253	
	Toshiba	TMP8253	
UPD8255A	Harris	82C55	
		CP82C55A	
	Intel	8255	
		82C55	
		P8255	
	NEC	UPD71055	
	OKI	82C55	
		MSM82C55A	**4732**
	S-MOS	SMC82C55AC	
	Toshiba	TMP8255	
		TMP82C55	**1750**
UPD8257-2/-5	AMD	8257	
	Intel	8257	
UPD8259A/A-2	AMD	D8259	
	Fujitsu	MBL8259	
	Harris	**82C59A**	**682,1619,1621,1631**
		CP82C59A	
	Intel	8259	
		82C59A	
	National	INS8259	
	Nitron	NC82C59A	
	OKI	**MSM82C59A**	**4732**
	S-MOS	SMC82C59AC	
	Toshiba	TMP8259	
UPS71087	AMD	8287	
	Harris	**82C87**	**1619,1622**
	Intel	8287	
		82C87	
	NEC	μPD8287	
	Nitron	NC82C87	
	OKI	82C87	
μPA2001	Exar	XR2001	
		XR2001C	
		XR2201C	
	Mitsubishi	M54524	
	Motorola	**MC1411**	**3212**
		ULN2001	**3212**
	RIFA	PBD3523-11	
	Sanyo	LB1231	
	SGS	L201	
μPA2001	SGS	ULN2001	
	SiliconG	SG2001	
	Sprague	**ULN-2001**	**3269**
		ULQ-2001	
	TI	ULN2001A	
	Toshiba	TD62001	
		TD62101	
μPA2002	Exar	XR2002C	
		XR2202C	
	Fairchild	MC1412	
	Mitsubishi	M54525	
	Motorola	**MC1412**	**3212**
		ULN2002	**3212**
	RIFA	PBD352304	
	Sanyo	LB1232	
	SGS	L202	
		ULN2002	
	Signetics	NE5602	
	SiliconG	SG2002	
	Sprague	ULN-2002	
	TI	ULN2002A	
	Toshiba	TD62002	
μPA2003	Exar	XR2003C	
		XR2203C	
	Fairchild	MC1413	
	Mitsubishi	M54523	
	Motorola	**MC1413**	**3212**
		ULN2003	**3212**
	RIFA	PBD352303	
	Sanyo	LB1233	
	SGS	L203	
		ULN2003	
	Signetics	NE5603	
		ULN2003	**3721**
	SiliconG	SG2003	
	Sprague	ULN-2003	
	Telefunken	TDA2003	
	TI	ULN2003A	
	Toshiba	TD62003	
		TD62103	
μPA2004	Exar	XR2204C	
	Mitsubishi	M54526	
	Motorola	**MC1416**	**3212**
		ULN2004	**3212**
	RIFA	PBD352302	
	Sanyo	LB1234	
	SGS	L204	
		ULN2004	
	Signetics	NE5604	
		ULN2004	**3721**
	SiliconG	SG2004	
	Sprague	ULN-2004	
		ULS-2004	
	TI	ULN2004A	
	Toshiba	TD62004	
		TD62104	
μPB429	AMD	AM27S191	
		AM27S291	
	Fairchild	932511	
	Fujitsu	MB7138H	
	Harris	HM76161	
	MMI	63S181	
	Motorola	MCM76	
	National	DM878291	
	Raytheon	**29683A**	**4134**
μPB8212	Intel	8212	
	Motorola	MC14575	
μPB8214	National	INS8214	
μPB8216	Intel	8216	
	National	DP8216	
		INS8216	
μPB8226	Intel	8226	
	Mitsubishi	M5L8226	
	National	DP8226	
		INS8226	
μPB8228	AMD	8228	
	Intel	8228	
	National	DP8228	
		INS8228	
	TI	SN74S428	
		TIM8228	
μPB8282	**Fujitsu**	**MBL8282**	**1611**
	Harris	**82C82**	**682,1619,1622,1631**
	Intel	8282	
		82C82	
	NEC	UPD71082	
	Nitron	NC82C82	
	OKI	82C82	
μPB8284	AMD	8284	
	Fujitsu	MBL8284	
	Harris	82C84	

(Continued)

◆ Discontinued

The manufacturers report their devices can be used as direct replacements.
Performance details often differ, so compare the specifications considering your requirements.

NEC Electronics (Cont'd)

Manufacturer Device	Replacement Source	Device	IC Master Page
μPB8284	**Harris**	**82C84A**	682,1619,1623,1631
	Intel	8284	
		82C84	
		82C84A	
	NEC	UPD71084	
	Nitron	NC82C84A	
μPB8286	AMD	8304	
		DP8304	
	Fujitsu	**MBL8286**	1611
	Harris	**82C86**	1619,1622
	Intel	8286	
		82C86	
	National	DP8304	
	NEC	μPD71086	
	Nitron	NC82C86	
	OKI	82C86	
μPB8288	AMD	8288	
	Fujitsu	**MBL8288**	1611
	Harris	**82C88**	682,1619,1623,1631
	Intel	8288	
		82C88	
	NEC	UPD71088	
	Nitron	NC82C88	
	OKI	82C88	
μPC142	National	LM304	
	SiliconG	SG304	
	ThomsonCSF	LM304	
μPC1555	Exar	XR555	
	Fairchild	μA555	
	Hitachi	HA17555	
	Intersil	NE555	
	Mitsubishi	M51841	
		M51848	
		M5251	
		M5E555	
	Motorola	MC1455	
	Raytheon	RC555	
	RCA	CA555	
	Sanyo	LB8555	
	SGS	NE555	
	Signetics	**NE555**	3721
		NE555N	
	TI	NE555	
	ThomsonCSF	LM555	
	Samsung	**NE555**	3679
μPC157	AD	AD301	
	Fairchild	μA301A	
	Intersil	AD301	
	LinearTech	LM301	
		LM301A	
	Motorola	LM301	
	National	LM301	
		LM301A	
	NEC	μPC301	
	Raytheon	LM301	
	RCA	CA301	
		LM301	
	SiliconG	SG301	
	TI	LM301	
		LM301A	
	ThomsonCSF	LM301A	
	Toshiba	TA7506	
μPC159	AD	AD518	
	Harris	LM318	
	LinearTech	LM318	
	National	LM318	
	TI	LM318	
	ThomsonCSF	LM318	
		TDB0118	
μPC2002	Hitachi	TDA2002	
	SGS	TDA2002	
μPC2005	SGS	TDA2005	
μPC251	AMD	747	
	Fairchild	μA747	
	Hitachi	HA17747	
	MicroPwr	MPOP04	
	Motorola	**MC1747**	3617
	National	LM747	
	PMI	**OP-04**	3636
		PM747	
	Raytheon	RC747	
		RM747	
	RCA	**CA747**	3672
	Signetics	**μA747**	3721
	TeledyneS	747	
	TI	μA747	
μPC255	Fairchild	μA709	
	Hitachi	HA1303	
μPC255	**Motorola**	**MC1709**	3615
	National	LM1709	
		LM709	
	NEC	μPC55	
	RCA	**CA3038**	3672
	TI	μA709	
	ThomsonCSF	SFC2709	
	Toshiba	TA7502	
μPC271	AD	AD311	
	Fairchild	μA311	
	LinearTech	LM311	
	Motorola	**LM2903**	3631
		LM311	3631
	National	LM2903	
		LM311	
	NEC	μPC311	
	Raytheon	LM311	
	RCA	**CA311**	3672,3677
		LM311	
	SGS	LM2903	
		LM311	
	Signetics	**LM2903**	3725
		LM311	3721
	SiliconG	SG311	
	TI	LM2903	
		LM311	
	ThomsonCSF	LM2903	
		LM311	
		SFC3111	
μPC2901	Cypress	CY7C901	
	Fairchild	μA2901	
		μA3302	
	Motorola	**LM2901**	3631
		MC3302	3631
	National	LM2901	
		LM3302	
	PMI	CMP-04	
	Raytheon	LM2901	
		RC3302	
	RCA	CA3302	
	SGS	LM2901	
		MC3302	
	Signetics	**LM2901**	3721,3722
		MC3302	3721
	SiliconG	SG324A	
	TI	LM2901	
		LM3302	
	ThomsonCSF	LM2901	
μPC2902	Fairchild	μA2902	
	Hitachi	HA17902	
	Motorola	**LM2902**	3618
	National	LM2902	
	Raytheon	LM2902	
	SGS	LM2902	
	TI	LM2902	
	ThomsonCSF	LM2902	
μPC301	AD	AD301	
	Fairchild	μA301A	
	Intersil	AD301	
	LinearTech	LM301	
		LM301A	
	Motorola	LM301	
	National	LM301	
		LM301A	
	NEC	μPC157	
	Raytheon	LM301	
	RCA	CA301	
		LM301	
	SiliconG	SG301	
	TI	LM301	
		LM301A	
	ThomsonCSF	LM301A	
	Toshiba	TA7506	
μPC311	AD	AD311	
	Fairchild	μA311	
	LinearTech	LM311	
	Motorola	**LM2903**	3631
		LM311	3631
	National	LM2903	
		LM311	
	NEC	μPC271	
	Raytheon	LM311	
	RCA	**CA311**	3672,3677
		LM311	
	SGS	LM2903	
		LM311	
	Signetics	**LM2903**	3725
		LM311	3721
	SiliconG	SG311	
	TI	LM2903	
		LM311	
	ThomsonCSF	LM2903	
μPC311	ThomsonCSF	LM311	
		SFC3111	
μPC319	**Signetics**	**LM319**	3723
	ThomsonCSF	LM319	
μPC339	AMD	LM339A	
	Fairchild	μA339	
	Hitachi	HA17901	
	Motorola	**LM339**	3631
	National	LM339	
	PMI	CMP-04	
		PM339A	
	Raytheon	LM339	
	RCA	**CA339**	3672,3677
		CA339A	3672,3677
		LM339	
	SGS	LM339	
	TI	LM339	
	ThomsonCSF	LM339	
		TDB0139	
μPC358	**Motorola**	**LM358**	3617
	National	LM358A	
	RCA	**CA358A**	3672
		LM358	
	Sanyo	LA6358	
	SGS	LM358	
	Signetics	**LM358**	3722,3729
		NE532	3729
	TI	LM358	
	ThomsonCSF	LM358	
μPC3911	National	LM3911	
μPC55	Fairchild	μA709	
	Hitachi	HA1303	
	Motorola	**MC1709**	3615
	National	LM1709	
		LM709	
	NEC	μPC255	
	RCA	**CA3038**	3672
	TI	μA709	
	ThomsonCSF	SFC2709	
	Toshiba	TA7502	
μPC603	**PMI**	**DAC-01C**	3637
μPC610	PMI	DAC-02C	
μPC624	AMD	AM1408	
		DAC-08	
		SSS1408	
	AD	AD1408	
		ADDAC-08	
	Datel	DAC-08B	
		DAC-I8BC	
		DAC-IC8B	
		DAC-IC8BC	3162
	Fairchild	DAC-08	
		MA0802M	
		μA0801	
		μA0802	
	Hitachi	HA17408	
	Motorola	**DAC-08**	3630
		MC1408	
	National	DAC0801	
		DAC0802	
		DAC0806	
		DAC0807	
		DAC0808	
	PMI	**DAC-08**	3637,3639
		DAC-1408	
	Raytheon	**DAC-08**	3664
	Signetics	MC1408	
μPC7808	Lambda	LMC7808	
		LμA7808	
	Motorola	**MC7808**	3623
	SiliconG	SG340-8	
		SG7808	
	TI	μA7808	
	ThomsonCSF	μA7808	
	Samsung	MC7808	
μPC7812	Fairchild	μA7812	
	IPS	**IP140-12**	3599
		IP340-12	3599
		IP7812	3599
	Lambda	LMC7812	
		LμA7812	
	Motorola	**MC7812**	3623
	National	LM7812	
	SGS	L7812	
	SiliconG	SG340-12	
		SG7812	
	TI	μA7812	
	Toshiba	TA78012	
	Samsung	MC7812	
	Unitrode	UC7812	
μPC7815	Fairchild	μA7815	
		μA78L15	
μPC7815	**IPS**	**IP140-15**	3599
		IP340-15	3599
		IP7815	3599
	Lambda	LAS1515	
		LMC7815	
		LμA7815	
	Motorola	**MC7815**	3624
		MC78L15	
	National	LM340-15	
		LM340LA-15	
		LM340T-15	
		LM7815	
		LM78L15	
	NEC	μPC78L15	
	SGS	L7815	
	SiliconG	SG340-15	
		SG7815	
	TI	LM340-15	
		μA7815	
		μA78L15	
	ThomsonCSF	μA7815	
	Toshiba	TA78015	
	Samsung	MC7815	
	Unitrode	UC7815	
μPC7818	Lambda	LMC7818	
	SiliconG	SG340-18	
		SG7818	
	TI	LM340-18	
		μA7818	
	ThomsonCSF	μA7818	
μPC7824	Lambda	LMC7824	
		LμA7824	
	Motorola	**MC7824**	3624
	SGS	L7824	
	SiliconG	SG7824	
	TI	LM340-24	
		μA7824	
	ThomsonCSF	μA7824	
	Samsung	MC7824	
μPC78L05	Fairchild	μA78L05	
	Motorola	MC78L05	
	National	LM340LA-5	
		LM78L05	
	TI	μA78L05	
	ThomsonCSF	μA7805	
μPC78L08	Motorola	MC78L08	
	TI	μA78L08	
μPC78L12	Fairchild	μA78L12	
	Motorola	MC78L12	
	National	LM340LA-12	
		LM78L12	
	TI	μA78L12	
	ThomsonCSF	SFC2812	
		μA7812	
μPC78L15	Fairchild	μA7815	
		μA78L15	
	IPS	**IP140-15**	3599
		IP340-15	3599
		IP7815	3599
	Lambda	LAS1515	
		LMC7815	
		LμA7815	
	Motorola	**MC7815**	3624
		MC78L15	
	National	LM340-15	
		LM340LA-15	
		LM340T-15	
		LM7815	
		LM78L15	
	NEC	μPC7815	
	SGS	L7815	
	SiliconG	SG340-15	
		SG7815	
	TI	LM340-15	
		μA7815	
		μA78L15	
	ThomsonCSF	μA7815	
	Toshiba	TA78015	
	Samsung	MC7815	
	Unitrode	UC7815	
μPC78M05	Fairchild	μA78M05	
	Motorola	MC78M05	
	National	LM341-5	
		LM342-05	
		LM78M05	
	Sanyo	L78M05	
	SGS	L78M05CV	
	TI	μA78M05	
	Samsung	MC78M05	
μPC78M08	Fairchild	μA78M08	
	Motorola	MC78M08	
	Sanyo	L78M08	

(Continued)

◆ Discontinued

Bold face device numbers indicate manufacturers data is provided in the IC Master on the pages noted.

NEC Electronics (Cont'd)

Manufacturer Device	Replacement Source	Device	IC Master Page
µPC78M08	SGS	L78M08CV	
	TI	µA78M08	
	Samsung	MC78M08	
µPC78M12	Fairchild	µA78M12	
	Motorola	MC78M12	
	National	LM341-12	
		LM342-12	
		LM78M12	
	Sanyo	L78M12	
	SGS	L78M12CV	
	Samsung	MC78M12	
µPC78M15	Fairchild	µA78M15	
	Motorola	MC78M15	
	National	LM341-15	
		LM342-15	
		LM78M15	
	Sanyo	L78M15	
	SGS	L78M15CV	
	Samsung	MC78M15	
µPC7905	Fairchild	µA7905	
		µA79M05	
	IPS	**IP120-5**	**3599**
		IP320-5	**3599**
		IP7905	**3599**
	Lambda	LµA7905	
	National	LM320MP5	
		LM7905	
		LM79M05	
	SiliconG	SG120-5	
		SG320-05	
		SG320P-5	
	TI	µA7905	
	Unitrode	UC7905	
µPC7912	Fairchild	µA7912	
		µA79M12	
	IPS	**IP320-12**	**3599**
		IP7912	**3599**
	Motorola	MC7912	
	National	LM320MP12	
		LM7912	
		LM79M12	
	SGS	L7912	
	SiliconG	SG320P-12	
		SG7912	
	TI	LM320-12	
		µA7912	
	ThomsonCSF	µA7912	
	Samsung	MC7912	
	Unitrode	UC7912	
µPC7915	Fairchild	µA7915	
	IPS	**IP320-15**	**3599**
		IP7915	**3599**
	Motorola	MC7915	
	National	LM320-15	
		LM320T15	
		LM7915	
	SGS	L7915	
	SiliconG	SG320-15	
		SG7915	
	TI	LM320-5	
		µA7915	
	ThomsonCSF	µA7915	
	Samsung	MC7915	
	Unitrode	UC7915	
µPD2147A	AMD	AM2147	
	Cypress	CY7C147	
	Hitachi	HM6147H	
	Intel	2147H	
	Motorola	MCM6147	
	National	NMC2147H	
µPD2167	Cypress	CY7C167	
	Fujitsu	MB8164A	
	Hitachi	HM6167H	
	Inmos	IMS1400	
	Intel	51C66	
		51C67	
	NEC	µPD4311	
µPD27128	AMD	AM27128	
	Fujitsu	MBM27128	
	Hitachi	HM4827128	
	Intel	27128	
		27128A	**4074**
	Mitsubishi	M5L27128	
		M5L27C128	
	SEEQ	27128	
	SGS	M27128	
	TI	**TMS27C128**	**4210**
	Toshiba	TMM27128	
µPD4016	AMD	AM9128	
		AM9218	
			(Continued)
µPD4016	Cypress	CY7C128	
	Fujitsu	MB8128	
		MB8416	
	Harris	HM6116	
		HM6516	
	IDT	IDT6116	
	Intel	2128	
	MicroPwr	MP6116	
	Mitsubishi	M58275	
		M5M116	
		M5M5116	
		M5M5117	
		M5M5118	
		MS8725	
	Motorola	MCM2016	
		MCM2016H	
		MCM2128	
		MCM6116	**4119**
		MCM61L16	**4119**
		MCM65116	
	National	MMC2116	
	OKI	MSM2128	
		MSM5128	**4732,4733**
	RCA	MWS6116A	
	SSS	883C21C16	
		BCM21C16	
		SCM21C16	
		SCM6116	
	TI	TMS4016	
	ThomsonCSF	ET2128	
	Toshiba	**TC5516A**	**4263**
		TMM2015A	
		TMM2016	
		TMM2016A	**4263**
	Samsung	KM6816	
	UMC	UM2128	
	Universal	US574HC133	
µPD411000	Hitachi	HM51101	
		HM51102	
	NEC	µPD411001	
	Toshiba	TC511001C	
µPD411001	Hitachi	HM51101	
		HM51102	
	NEC	µPD411000	
	Toshiba	TC511001C	
µPD41254	Fujitsu	MB81461	
	Hitachi	HM53464	
	TI	TMS4461	
µPD41256	AMD	MCM6256	
	AT&T	WCM41256	
	Fujitsu	MB81256	
	Hitachi	HM50256	
		HM50257	
	MicronTech	MT1256	
	Mitsubishi	M5M4256	
		MSM4257	
	Motorola	MCM6256	
		MCM6257	
	NEC	MPD41257	
	OKI	M5M37256	
		MSM37256	
		MSM41256	
	Panasonic	MM41256	
	TI	TMS4257	
	Toshiba	TMM41256	
	Samsung	KM1256	
µPD41257	Toshiba	TMM41257	
µPD4164	Fairchild	F64K	
	Fujitsu	MB8264A	
		MB8266A	
	Hitachi	HM4864	
	Inmos	IMS2600	
	MicronTech	MT4264	
	Motorola	MCM4164B	
		MCM6665B	
	National	NMC4164	
	OKI	MSM3764	
	ThomsonCSF	ET4164	
	Toshiba	TMM4164	
	Samsung	KM4164	
µPD4168	Inmos	IMS2630	
	Intel	2187A	
µPD42832	Hitachi	HM65256	
	Toshiba	TMM41832	
µPD4311	Cypress	CY7C167	
	Fujitsu	MB8164A	
	Hitachi	HM6167H	
	Inmos	IMS1400	
	Intel	51C66	
		51C67	
	NEC	µPD2167	
µPD4314	AMD	AM2168	
		AM9968	
	Fujitsu	MB8168	
	Hitachi	HM6168	
	Inmos	IMS1420	
		IMS1421	
µPD43256	Fujitsu	MB84256	
	Hitachi	HM64456	
	Toshiba	**TC55257**	**4263**
µPD4361	Fairchild	F1600	
	Fujitsu	MB8171	
	Hitachi	HM6287	
	Inmos	IMS1600	
	IDT	IDT7M164	
	Motorola	MCM6164	
	Toshiba	TC5561	
	VTI	VT64KD1	
µPD4362	IDT	IDT7188	
	Lattice	SR64K4	
µPD4364	AMD	AM9988	
		AM9988C	
	Cypress	CY7C186	
	Fujitsu	MB8464	
		MB8464A	
	Hitachi	HM6264	
		HM6464	
	IDT	IDT7188	
		IDT7M864	
	Mitsubishi	M5M5165	
	Motorola	MCM6164	
	NEC	µPD4464	
	OKI	MSM5164	
		MSM5165	
	RCA	CDM6264	
	S-MOS	SRM2064	
		SRM2264	**4177,4178**
	Sharp	LH5164	
	Toshiba	TC5564	
		TC5565	
		TMM2063	
		TMM2064	
	Samsung	KM6264	
µPD446	Fujitsu	MB8416	
	Harris	HM65162	
	IDT	6116	
		IDT6116	
	Mitsubishi	5117	
	Mostek	MK6116	
	National	6116	
	Nitron	NC6116	
	OKI	**MSM5128**	**4732,4733**
	RCA	CDM6116	
	S-MOS	SRM2016	
	Toshiba	**TC5517A**	**4263**
		TC5517B	
µPD4464	AMD	AM9988	
		AM9988C	
	Cypress	CY7C186	
	Fujitsu	MB8464	
		MB8464A	
	Hitachi	HM6264	
		HM6464	
	IDT	IDT7188	
		IDT7M864	
	Mitsubishi	M5M5165	
	Motorola	MCM6164	
	NEC	µPD4364	
	OKI	MSM5164	
		MSM5165	
	RCA	CDM6264	
	S-MOS	SRM2064	
		SRM2264	**4177,4178**
	Sharp	LH5164	
	Toshiba	TC5564	
		TC5565	
		TMM2063	
		TMM2064	
	Samsung	KM6264	
µPD449	Fujitsu	MB8418	
	Hitachi	HM6117	
	RCA	CDM6118	
	S-MOS	SRM2018	
	Toshiba	TC5518B	
	UMC	UM2167	
µPD4511	Fairchild	F4511	
	Mitel	MD4511	
	MMI	4511	
	Motorola	MC14511	
	National	CD4511	
			(Continued)
µPD4511	RCA	CD4511	
	SGS	HCC/HCF4511	
	Signetics	HEF4511	
	Solitron	CM4511	
	SSS	SCL4511	
	Toshiba	TC4511	
µPD494	NEC	TL494	
µPD70108-51-8	Zilog	70108	
µPD70116-51-8	Zilog	70116	
µPD71051	Harris	82C51	
	Intel	82C51	
	OKI	82C51	
µPD71057	Harris	82C57	
	Intel	82C57	
	OKI	82C57	
µPD71086	AMD	8304	
		DP8304	
	Fujitsu	**MBL8286**	**1611**
	Harris	**82C86**	**1619,1622**
	Intel	8286	
		82C86	
	National	DP8304	
	NEC	µPB8286	
	Nitrón	NC82C86	
	OKI	82C86	
µPD7210	NEC	UPD7210	
	SMC	COM7210	
µPD7220A	Zilog	Z7220A	
µPD7265	SMC	FDC7265	
µPD7720A	GouldAMI	7720	
◆µPD8021	Signetics	8021	
◆µPD8022	Toshiba	TMP8022	
µPD8035	AMD	8035	
	Intel	8035	
	National	INS8035	
	Signetics	SCN8035	
	Toshiba	**TMP8035**	**1750**
µPD8041A	AMD	8041	
	Intel	8041A	
µPD8048	AMD	8048	
	Intel	8048	
	National	INS8048	
	Signetics	SCN8048	
	Toshiba	**TMP8048**	**1750**
µPD8049	Intel	8049	
	National	INS8049	
	Signetics	SCN8049	
	Toshiba	**TMP8049**	**1750**
µPD8085	AMD	8085	
		8085A	
	Intel	8085	
		8085A	
	Toshiba	**TMP8085A**	**1750**
◆µPD80C35	AMD	8035	
	Intel	8035	
	National	INS8035	
	NEC	µPD8035	
	Signetics	SCN8035	
	Toshiba	**TMP8035**	**1750**
µPD80C48	Intel	80C48	
	Toshiba	TMP80C48	
µPD80C49	Intel	80C49	
	Signetics	**SCC80C49**	**1710**
	Toshiba	TMP80C49	
µPD80C50	Intel	80C50	
	Toshiba	TMP80C50	
µPD8155	AMD	8155	
	Harris	HS81C55	
	Intel	8155	
	Toshiba	**TMP8155**	**1750**
µPD8156	AMD	8156	
	Harris	HS81C56	
	Intel	8156	
µPD8156-2	Intel	8156-2	
µPD8255A-21-5	Intel	8255A	
µPD8279-5	AMD	8279-5	
	Intel	8279	
µPD8287	AMD	8287	
	Harris	**82C87**	**1619,1622**
	Intel	8287	
		82C87	
	NEC	UPS71087	
	Nitron	NC82C87	
	OKI	82C87	
µPD8741A	Intel	8741A	
µPD8748	Intel	8748	
	National	NS80CX48	
µPD8755	Intel	8755	
µPD8755A	Intel	8755A	

◆ Discontinued

The manufacturers report their devices can be used as direct replacements.
Performance details often differ, so compare the specifications considering your requirements.

Nitron

Manufacturer Device	Replacement Source	Device	IC Master Page
MA-050	MasterLogic	MASG-050	
MA-100	MasterLogic	MASG-100	
MA-200	MasterLogic	MASG-200	
MA-400	MasterLogic	MASG-400	
MA1200	MasterLogic	MASG1200	
MA600	Micropac	MASG600	
MA800	MasterLogic	MASG800	
MH0250	Matra	MA0250	
MH0400	Matra	MA0400	
MH0800	Matra	MA0800	
MH1200	Matra	MA1200	
◆NC2257	Micrel	MIC2257	
	Motorola	MC2257	
◆NC2259	Micrel	MIC2259	
	Motorola	MC2259	
◆NC2260	Micrel	M-IC2260	
	Motorola	MC2260	
◆NC2320	ITT	DF320	
	Mitel	MT4320	
◆NC2331	Siliconix	DF331	
◆NC2332	Siliconix	DF332	
NC6116	Fujitsu	MB8416	
	Harris	HM65162	
	IDT	6116	
		IDT6116	
	Mitsubishi	5117	
	Mostek	MK6116	
	National	6116	
	NEC	µPD446	
	OKI	**MSM5128**	**4732,4733**
	RCA	CDM6116	
	S-MOS	SRM2016	
	Toshiba	**TC5517A**	**4263**
		TC5517B	
◆NC7051	GI	ER2051	
◆NC7053	GI	ER5901	
NC72C37A	AMD	AM8237A	
		AM9517A-4	
	Harris	82C37A	
	Intel	8237A-4	
◆NC7400	GI	ER1400	
◆NC7451	GI	ER3400	
	Hughes	HNVM3104A	
NC74HC107	Hitachi	HD74HC107	
	Motorola	**MC74HC107**	**1126**
	National	MM74HC107	
	RCA	**CD74HC107**	**1149**
	SPI	SP74HC107	
	SGS	M74HC107	
	Signetics	**74HC107**	**1156**
	TI	SN74HC107	
	Toshiba	**TC40H107**	**1363**
	Universal	US74HC107	
NC74HC109	Hitachi	HD74HC109	
		HD74HC14	
	Motorola	**MC74HC109**	**1126**
	National	MM74HC109	
	RCA	**CD74HC109**	**1149**
	SPI	SP74HC109	
	SGS	M74HC109	
	Signetics	**74HC109**	**1156**
	TI	SN74HC109	
	Toshiba	**TC74HC109**	**1363**
	Universal	US74HC109	
NC74HC138	Hitachi	HD74HC138	
	Motorola	**MC74HC138**	**1130**
	National	MM74HC138	
	RCA	**CD74HC138**	**1150**
	SPI	SP74HC138	
	SGS	M74HC138	
	Signetics	**74HC138**	**1157**
	SSS	SS74HC138	
	TI	SN74HC138	
	Universal	US74HC138	
NC74HC139	Hitachi	HD74HC139	
	Motorola	**MC74HC139**	**1130**
	National	MM74HC139	
	RCA	**CD74HC139**	**1150**
	SPI	SP74HC139	
	SGS	M74HC139	
	Signetics	**74HC139**	**1157**
	SSS	SS74HC139	
	TI	SN74HC139	
	Toshiba	**TC40H139**	**1363**
	Universal	US74HC139	
NC74HC148	Hitachi	HD74HC148	
	SPI	SP74HC148	
	SGS	M74HC148	
			(Continued)
NC74HC148	TI	SN74HC148	
	Toshiba	**TC74HC148**	**1363**
NC74HC157	Hitachi	HD74HC157	
	Motorola	**MC74HC157**	**1129**
	National	MM74HC157	
	RCA	**CD74HC157**	**1150**
	SPI	SP74HC157	
	SGS	M74HC157	
	Signetics	**74HC157**	**1157**
	TI	SN74HC157	
	Toshiba	**TC40H157**	**1363**
	Universal	US74HC157	
NC74HC166	Motorola	MC74HC166	
	RCA	**CD74HC166**	**1149**
	SGS	M74HC166	
	Signetics	**74HC166**	**1157**
	TI	SN74HC166	
	Universal	US74HC166	
NC74HC174	Hitachi	HD74HC174	
	Motorola	**MC74HC174**	**1126**
	National	MM74HC174	
	RCA	**CD74HC174**	**1149**
	SPI	SP74HC174	
	SGS	M74HC174	
	Signetics	74HC174	
	TI	SN74HC174	
	Toshiba	**TC40H174**	**1363**
	Universal	US74HC174	
NC74HC175	Hitachi	HD74HC175	
	Motorola	**MC74HC175**	**1126**
	National	MM74HC175	
	RCA	**CD74HC175**	**1149**
	SPI	SP74HC175	
	SGS	M74HC175	
	Signetics	**74HC175**	**1157**
	TI	SN74HC175	
	Toshiba	**TC40H175**	**1363**
	Universal	US74HC175	
NC74HC191	Hitachi	HD74HC191	
	RCA	**CD74HC191**	**1150**
	SGS	M74HC191	
	Signetics	**74HC191**	**1157**
	TI	SN74HC191	
	Universal	US74HC191	
NC74HC240	Hitachi	HD74HC240	
	Mitel	MD74HC240	
	Motorola	**MC74HC240**	**1124**
	National	MM74HC240	
	RCA	**CD74HC240**	**1149**
	SPI	SP74HC240	
	SGS	M74HC240	
	Signetics	**74HC240**	**1157**
	SSS	SS74HC240	
	Supertex	SI74HC240	
	TI	SN74HC240	
	Toshiba	**TC40H240**	**1363**
	Universal	US74HC240	
	Zytrex	ZX74HC240	
NC74HC241	Hitachi	HD74HC241	
	Mitel	MD74HC241	
	Motorola	**MC74HC241**	**1124**
	National	MM74HC241	
	RCA	**CD74HC241**	**1149**
	SPI	SP74HC241	
	SGS	M74HC241	
	Signetics	**74HC241**	**1157**
	SSS	SS74HC241	
	Supertex	SI74HC241	
	TI	SN74HC241	
	Universal	US74HC240	
	Zytrex	ZX74HC241	
NC74HC242	Hitachi	HD74HC242	
	Motorola	**MC74HC242**	**1124**
	National	MM74HC242	
	RCA	**CD74HC242**	**1149**
		SGN	
	SPI	SP74HC242	
	SGS	M74HC242	
	Signetics	**74HC242**	**1158**
	TI	SN74HC242	
	Universal	US74HC242	
NC74HC244	Hitachi	HD74HC244	
	Mitel	MD74HC244	
	Motorola	**MC74HC244**	**1124**
	National	MM74HC244	
	RCA	**CD74HC244**	**1149**
	SPI	SP74HC244	
	SGS	M74HC244	
	Signetics	**74HC244**	**1158**
	SSS	SS74HC244	
	Supertex	SI74HC244	
	TI	SN74HC244	
			(Continued)
NC74HC244	Universal	US74HC244	
	Zytrex	ZX74HC244	
NC74HC245	Hitachi	HD74HC245	
	Motorola	**MC74HC245**	**1124**
	National	MM74HC245	
	RCA	**CD74HC245**	**1149**
	Signetics	**74HC245**	**1158**
	SSS	SS74HC245	
	TI	SN74HC245	
	Universal	US74HC245	
NC74HC257	Hitachi	HD74HC257	
	Motorola	**MC74HC257**	**1129**
	National	MM74HC257	
	RCA	**CD74HC257**	**1150**
	SPI	SP74HC257	
	SGS	M74HC257	
	Signetics	**74HC257**	**1158**
	TI	SN74HC257	
	Universal	US74HC257	
NC74HC273	CTI	74HC273	
	Hitachi	HD74HC273	
	Motorola	**MC74HC273**	**1126**
	RCA	**CD74HC273**	**1149**
	SPI	SP74HC273	
	SGS	M74HC273	
	Signetics	**74HC273**	**1158**
	TI	SN74HC273	
	Universal	US74HC273	
NC74HC367	Hitachi	HD74HC367	
	Motorola	**MC74HC367**	**1124**
	National	MM74HC367	
	RCA	**CD74HC367**	**1149**
	SPI	SP74HC367	
	SGS	M74HC367	
	Signetics	**74HC367**	**1158**
	TI	SN74HC367	
	Universal	US74HC367	
NC74HC373	Hitachi	HD74HC373	
	Mitel	MD74HC373	
	Motorola	**MC74HC373**	**1126**
	National	MM74HC373	
	RCA	**CD74HC373**	**1150**
	SPI	SP74HC373	
	SGS	M74HC373	
	Signetics	**74HC373**	**1158**
	SSS	SS74HC373	
	Supertex	SI74HC373	
	TI	SN74HC373	
	Universal	US74HC373	
	Zytrex	ZX74HC373	
NC74HC374	Hitachi	HD74HC374	
	Mitel	MD74HC374	
	Motorola	**MC74HC374**	**1126**
	National	MM74HC374	
	RCA	**CD74HC374**	**1149**
	SPI	SP74HC374	
	SGS	M74HC374	
	Signetics	**74HC374**	**1158**
	SSS	SS74HC374	
	TI	SN74HC374	
	Universal	US74HC374	
	Zytrex	ZX74HC374	
NC74HC393	Hitachi	HD74HC393	
	Motorola	**MC74HC393**	**1127**
	National	MM74HC393	
	RCA	**CD74HC393**	**1150**
	SPI	SP74HC393	
	SGS	M74HC393	
	Signetics	**74HC393**	**1158**
	TI	SN74HC393	
	Universal	US74HC393	
NC74HC42	Hitachi	HD74HC42	
	Motorola	**MC74HC42**	**1130**
	National	MM74HC42	
	RCA	**CD74HC42**	**1150**
	SPI	SP74HC42	
	SGS	M74HC42	
	Signetics	**74HC42**	**1156**
	TI	SN74HC42	
	Universal	US74HC42	
NC74HC51	Hitachi	HD74HC51	
	Motorola	MC74HC51	
	National	MM74HC51	
	TI	SN74HC51	
	Toshiba	**TC74HC51**	**1363**
	Universal	US74HC51	
NC74HC640	Hitachi	HD74HC640	
	Motorola	**MC74HC640**	**1125**
	National	MM74HC640	
	RCA	**CD74HC640**	**1149**
	Signetics	**74HC640**	**1159**
	SSS	SS74HC640	
			(Continued)
NC74HC640	TI	SN74HC640	
	Universal	US74HC640	
NC74HC646	Hitachi	HD74HC646	
	Motorola	**MC74HC646**	**1125**
	National	MM74HC646	
	RCA	**CD74HC646**	**1149**
	SGS	M74HC646	
	Signetics	**74HC646**	**1159**
	TI	SN74HC646	
	Universal	US74HC646	
NC74HC74	Hitachi	HD74HC74	
	Motorola	**MC74HC74**	**1126**
	National	MM74HC74	
	RCA	**CD74HC74**	**1149**
	SPI	SP74HC74	
	SGS	M74HC74	
	Signetics	**74HC74**	**1156**
	TI	SN74HC74	
	Toshiba	**TC40H074**	**1363**
	Universal	US74HC74	
NC74HC93	SPI	SP74HC93	
NC74HCT107	RCA	CD74HCT107	
	Signetics	**74HCT107**	**1156**
	Universal	US74HCT107	
NC74HCT109	RCA	CD74HCT109	
	Signetics	**74HCT109**	**1156**
	Universal	US74HCT109	
NC74HCT138	CTI	74HCT138	
	IDT	IDT74HCT138	
	Mitel	MD74HCT138	
	Motorola	MC74HCT138	
	Plessey	MV74HCT138	
	RCA	**CD74HCT138**	**1150**
	SPI	SP74HCT138	
	SGS	M74HCT138	
	Signetics	**74HCT138**	**1157**
	SSS	SS74HCT138	
	TI	SN74HCT138	
	Toshiba	**TC74HCT138**	**1363**
	Zytrex	ZX74HCT138-2	
NC74HCT139	IDT	IDT74HCT139	
	Mitel	MD74HCT139	
	Plessey	MV74HCT139	
	SPI	SP74HCT139	
	Signetics	**74HCT139**	**1157**
	Universal	US74HCT139	
	Zytrex	ZX74HCT139-2	
NC74HCT157	Motorola	MC74HCT157	
	RCA	**CD74HCT157**	**1150**
	Signetics	**74HCT157**	**1157**
	Universal	US74HCT157	
NC74HCT166	**RCA**	**CD74HCT166**	**1149**
	Signetics	**74HCT166**	**1157**
	Universal	US74HCT166	
NC74HCT174	RCA	CD74HCT174	
	Signetics	74HCT174	
	Universal	US74HCT174	
NC74HCT175	RCA	CD74HCT175	
	Signetics	**74HCT175**	**1157**
	Universal	US74HCT175	
NC74HCT191	**RCA**	**CD74HCT191**	**1150**
	Signetics	**74HCT191**	**1157**
	Universal	US74HCT191	
NC74HCT240	CTI	74HCT240	
	Hitachi	HD74HCT240	
	Micrel	MIC74HCT240	
	MicroTech	74HCTR240	
	Mitel	MD74HCT240	
	Motorola	MC74HCT240	
	National	MM74HCT240	
	Plessey	MV74HCT240	
	RCA	**CD74HCT240**	**1149**
	SPI	SP74HCT240	
	SGS	M74HCT240	
	Signetics	**74HCT240**	**1157**
	SSS	SS74HCT240	
	Supertex	SI74HCT240	
	TI	SN74HCT240	
	Toshiba	**TC74HCT240**	**1363**
	Universal	US74HCT240	
	Zytrex	ZX74HCT240-2	
NC74HCT241	CTI	74HCT241	
	Hitachi	HD74HCT241	
	Micrel	MIC74HCT241	
	MicroTech	74HCTR241	
	Mitel	MD74HCT241	
	Motorola	MC74HCT241	
	National	MM74HCT241	
	Plessey	MV74HCT241	
	RCA	**CD74HCT241**	**1149**
	SPI	SP74HCT241	
	SGS	M74HCT241	
			(Continued)

◆ Discontinued

Bold face device numbers indicate manufacturers data is provided in the IC Master on the pages noted.

Nitron (Cont'd)

Manufacturer Device	Replacement Source	Device	IC Master Page
NC74HCT241	**Signetics**	**74HCT241**	**1157**
	SSS	SS74HCT241	
	Supertex	SI74HCT241	
	TI	SN74HCT241	
	Toshiba	**TC74HCT241**	**1363**
	Universal	US74HCT241	
	Zytrex	ZX74HCT241-2	
NC74HCT242	Hitachi	HD74HCT242	
	Micrel	MIC74HCT242	
	RCA	**CD74HCT242**	**1149**
	Signetics	**74HCT242**	**1158**
	TI	SN74HCT242	
	Universal	US74HCT242	
NC74HCT244	CTI	74HCT244	
	Hitachi	HD74HCT244	
	Micrel	MIC74HCT244	
	MicroTech	74HCTR244	
	Mitel	MD74HCT244	
	Motorola	MC74HCT244	
	National	MM74HCT244	
	Plessey	MV74HCT244	
	RCA	**CD74HCT244**	**1149**
	SPI	SP74HCT244	
	SGS	M74HCT244	
	Signetics	**74HCT244**	**1158**
	SSS	SS74HCT244	
	Supertex	SI74HCT244	
	TI	SN74HCT244	
	Toshiba	**TC74HCT244**	**1363**
	Universal	US74HCT244	
	Zytrex	ZX74HCT244-2	
NC74HCT257	Motorola	MC74HCT257	
	RCA	**CD74HCT257**	**1150**
	Signetics	**74HCT257**	**1158**
	Universal	US74HCT257	
NC74HCT273	CTI	74HCT139	
	RCA	**CD74HCT139**	**1150**
		CD74HCT273	
	Signetics	**74HCT273**	**1158**
	SSS	SS74HCT139	
	Universal	US74HCT273	
NC74HCT367	**RCA**	**CD74HCT367**	**1149**
	Signetics	**74HCT367**	**1158**
	Universal	US74HCT367	
NC74HCT373	CTI	74HCT373	
	GTEMicro	G74SC373	
	Hitachi	HD74HCT373	
	Micrel	MIC74HCT373	
	MicroTech	74HCTR373	
	Mitel	MD74HCT373	
	Motorola	MC74HCT373	
	National	MM74HCT373	
	Plessey	MV74HCT373	
		MV74SC373	
	RCA	**CD74HCT373**	**1150**
	SPI	SP74HCT373	
	SGS	M74HCT373	
	Signetics	**74HCT373**	**1158**
	SSS	SS74HCT373	
	Supertex	SI74HCT373	
	TI	SN74HCT373	
	Toshiba	**TC74HCT373**	**1363**
	Universal	US74HCT373	
	Zytrex	ZX74HCT373-2	
NC74HCT374	CTI	74HCT374	
	GTEMicro	G74SC374	
	Hitachi	HD74HCT374	
	Micrel	MIC74HCT374	
	MicroTech	74HCTR374	
	Mitel	MD74HCT374	
	Motorola	MC74HCT374	
	National	MM74HCT374	
	Plessey	MV74HCT374	
		MV74SC374	
	RCA	CD74HCT374	
	SPI	SP74HCT374	
	SGS	M74HCT374	
	Signetics	**74HCT374**	**1158**
	SSS	SS74HCT374	
	Supertex	SI74HCT374	
	TI	SN74HCT374	
	Toshiba	**TC74HCT374**	**1363**
	Universal	US74HCT374	
	Zytrex	ZX74HCT374-2	
NC74HCT393	**RCA**	**CD74HCT393**	**1150**
	Signetics	PCF74HCT393	
	Universal	US74HCT393	
NC74HCT42	**Motorola**	**MC54HC73**	**1126**
	National	MM54HC73	

(Continued)

Manufacturer Device	Replacement Source	Device	IC Master Page
NC74HCT42	**RCA**	**CD54HC73**	**1149**
	Signetics	54HC73	
NC74HCT640	Hitachi	HD74HCT640	
	MicroTech	74HCTR640	
	Motorola	MC74HCT640	
	RCA	**CD74HCT640**	**1149**
	SGS	M74HCT640	
	Signetics	**74HCT640**	**1159**
	SSS	SS74HCT640	
	TI	SN74HCT640	
	Toshiba	**TC74HCT640**	**1363**
	Universal	US74HCT640	
	Zytrex	ZX74HCT640-2	
NC74HCT646	Hitachi	HD74HCT646	
	RCA	**CD74HCT646**	**1149**
	SGS	M74HCT646	
	Signetics	**74HCT646**	**1159**
	TI	SN74HCT646	
	Toshiba	**TC74HCT646**	**1363**
	Universal	US74HCT646	
NC74HCT74	**RCA**	**CD74HCT74**	**1149**
	Signetics	**74HCT74**	**1156**
	Universal	US74HCT74	
◆NC8000	Holt	HI8000	
NC82C54	**Harris**	**82C54**	**682,1619,1620,1631**
		CP82C54	
	Intel	8254	
		82C54	
	NEC	UPD71054	
	OKI	82C54	
	S-MOS	SMC82C54AC	
NC82C55A	**Harris**	**82C55A**	**682,1619,1621,1631**
	Intel	82C55A	
NC82C59A	AMD	D8259	
	Fujitsu	MBL8259	
	Harris	**82C59A**	**682,1619,1621,1631**
		CP82C59A	
	Intel	8259	
		82C59A	
	National	INS8259	
	NEC	UPD8259A/A-2	
	OKI	**MSM82C59A**	**4732**
	S-MOS	SMC82C59AC	
	Toshiba	TMP8259	
NC82C82	**Fujitsu**	**MBL8282**	**1611**
	Harris	**82C82**	**682,1619,1622,1631**
	Intel	8282	
		82C82	
	NEC	UPD71082	
		μPB8282	
	OKI	82C82	
NC82C83	**Harris**	**82C83**	**1619,1622**
	Intel	82C83	
	NEC	UPD71083	
	OKI	82C83	
NC82C84A	AMD	8284	
	Fujitsu	MBL8284	
	Harris	82C84	
		82C84A	**682,1619,1623,1631**
	Intel	8284	
		82C84	
		82C84A	
	NEC	UPD71084	
		μPB8284	
NC82C86	AMD	8304	
		DP8304	
	Fujitsu	**MBL8286**	**1611**
	Harris	**82C86**	**1619,1622**
	Intel	8286	
		82C86	
	National	DP8304	
	NEC	μPB8286	
		μPD71086	
	OKI	82C86	
NC82C87	AMD	8287	
	Harris	**82C87**	**1619,1622**
	Intel	8287	
		82C87	
	NEC	UPS71087	
		μPD8287	
	OKI	82C87	
NC82C88	AMD	8288	
	Fujitsu	**MBL8288**	**1611**
	Harris	**82C88**	**682,1619,1623,1631**
	Intel	8288	
		82C88	

(Continued)

Manufacturer Device	Replacement Source	Device	IC Master Page
NC82C88	NEC	UPD71088	
		μPB8288	
	OKI	82C88	
NC82C89	**Fujitsu**	**MBL8289**	**1611**
	Harris	**82C89**	**682,1619,1623,1631**
	Intel	8289	
	NEC	UPB8289	

OKI Semiconductor

Manufacturer Device	Replacement Source	Device	IC Master Page
5104	GouldAMI	6504	
	Harris	HM6504	
	Hitachi	4315	
		6147	
	Mitsubishi	58981	
	Motorola	6504	
	National	NMC6504	
	RCA	CDM5104	
	Rockwell	R6504	
	Synertek	SY6504	
	Toshiba	TC5504	
5114	Harris	HM6514	
	Hitachi	6148	
		HM4334	
	Mitsubishi	58981	
	Motorola	6514	
	NEC	444	
	RCA	MWS5514	
	Rockwell	R6514	
	Synertek	SY6514	
	Toshiba	TC5514	
82C51	Harris	82C51	
	Intel	82C51	
	NEC	μPD71051	
82C54	**Harris**	**82C54**	**682,1619,1620,1631**
		CP82C54	
	Intel	8254	
		82C54	
	NEC	UPD71054	
	Nitron	NC82C54	
	S-MOS	SMC82C54AC	
82C55	Harris	82C55	
		CP82C55A	
	Intel	8255	
		82C55	
		P8255	
	NEC	UPD71055	
		UPD8255A	
	OKI	**MSM82C55A**	**4732**
	S-MOS	SMC82C55AC	
	Toshiba	TMP8255	
		TMP82C55	**1750**
82C57	Harris	82C57	
	Intel	82C57	
	NEC	μPD71057	
82C82	**Fujitsu**	**MBL8282**	**1611**
	Harris	**82C82**	**682,1619,1622,1631**
	Intel	8282	
		82C82	
	NEC	UPD71082	
		μPB8282	
	Nitron	NC82C82	
82C83	**Harris**	**82C83**	**1619,1622**
	Intel	82C83	
	NEC	UPD71083	
	Nitron	NC82C83	
82C86	AMD	8304	
		DP8304	
	Fujitsu	**MBL8286**	**1611**
	Harris	**82C86**	**1619,1622**
	Intel	8286	
		82C86	
	National	DP8304	
	NEC	μPB8286	
		μPD71086	
	Nitron	NC82C86	
82C87	AMD	8287	
	Harris	**82C87**	**1619,1622**
	Intel	8287	
		82C87	
	NEC	UPS71087	
		μPD8287	
	Nitron	NC82C87	
82C88	AMD	8288	
	Fujitsu	**MBL8288**	**1611**
	Harris	**82C88**	**682,1619,1623,1631**
	Intel	8288	
		82C88	

(Continued)

Manufacturer Device	Replacement Source	Device	IC Master Page
82C88	NEC	UPD71088	
		μPB8288	
	Nitron	NC82C88	
M5M37256	AMD	MCM6256	
	AT&T	WCM41256	
	Fujitsu	MB81256	
	Hitachi	HM50256	
		HM50257	
	MicronTech	MT1256	
	Mitsubishi	M5M4256	
		MSM4257	
	Motorola	MCM6256	
		MCM6257	
	NEC	MPD41257	
		μPD41256	
	OKI	MSM37256	
		MSM41256	
	Panasonic	MM41256	
	TI	TMS4257	
	Toshiba	TMM41256	
	Samsung	KM1256	
MSL912	Dionics	DI513B	
		DI514B	
	Exar	**XR6118**	**3554**
	Sanyo	LB1290	
	Signetics	**NE594**	**3726**
	Sprague	**UDN-6118**	**3269**
	Toshiba	TD62781	
MSM2128	AMD	AM9128	
		AM9218	
	Cypress	CY7C128	
	Fujitsu	MB8128	
		MB8416	
	Harris	HM6116	
		HM6516	
	IDT	IDT6116	
	Intel	2128	
	MicroPwr	MP6116	
	Mitsubishi	M58275	
		M5M116	
		M5M5116	
		M5M5117	
		M5M5118	
		MS8725	
	Motorola	MCM2016	
		MCM2016H	
		MCM2128	
		MCM6116	**4119**
		MCM61L16	**4119**
		MCM65116	
	National	MMC2116	
	NEC	μPD4016	
	OKI	**MSM5128**	**4732,4733**
	RCA	MWS6116A	
	SSS	883C21C16	
		BCM21C16	
		SCM21C16	
		SCM6116	
	TI	TMS4016	
	ThomsonCSF	ET2128	
	Toshiba	**TC5516A**	**4263**
		TMM2015A	
		TMM2016	
		TMM2016A	**4263**
	Samsung	KM6816	
	UMC	UM2128	
	Universal	US574HC133	
MSM2716	Hitachi	HN462716	
	National	MM2716	
	SGS	M2716	
	ThomsonCSF	ET2716	
MSM2764	AMD	AM2764	
	Fujitsu	MBM2764	
		MBM27C64	
	Hitachi	HM482764	
		HN2764	
		HN27C64	
		HN482764	
	Intel	2764	
		2764A	
		27C64	**4078**
		87C64	**4078**
	Mitsubishi	M5L2764	
	NEC	UPD2764	
		UPD27C64	
	OKI	**MSM2764A**	**4732**
		MSM27C64	
	Rockwell	R2764	
		R27C64	
		R87C64	
	S-MOS	SPM27C64	

(Continued)

◆ Discontinued

The manufacturers report their devices can be used as direct replacements.
Performance details often differ, so compare the specifications considering your requirements.

OKI Semiconductor (Cont'd)

Manufacturer Device	Replacement Source	Device	IC Master Page
MSM2764	SEEQ	2764	
		5133	
	SGS	M2764	
	Signetics	27C64	
	SSS	SCM27C64	
	TI	TMS27C64	
	ThomsonCSF	ET2764	
	Toshiba	**TMM2764**	**4263**
MSM2764A	AMD	AM2764	
	Fujitsu	MBM2764	
		MBM27C64	
	Hitachi	HM482764	
		HN2764	
		HN27C64	
		HN482764	
	Intel	2764	
		2764A	
		27C64	**4078**
		87C64	**4078**
	Mitsubishi	M5L2764	
	NEC	UPD2764	
		UPD27C64	
	OKI	MSM2764	
		MSM27C64	
	Rockwell	R2764	
		R27C64	
		R87C64	
	S-MOS	SPM27C64	
	SEEQ	2764	
		5133	
	SGS	M2764	
	Signetics	27C64	
	SSS	SCM27C64	
	TI	TMS27C64	
	ThomsonCSF	ET2764	
	Toshiba	**TMM2764**	**4263**
MSM27C64	AMD	AM2764	
	Fujitsu	MBM2764	
		MBM27C64	
	Hitachi	HM482764	
		HN2764	
		HN27C64	
		HN482764	
	Intel	2764	
		2764A	
		27C64	**4078**
		87C64	**4078**
	Mitsubishi	M5L2764	
	NEC	UPD2764	
		UPD27C64	
	OKI	MSM2764	
		MSM2764A	**4732**
	Rockwell	R2764	
		R27C64	
		R87C64	
	S-MOS	SPM27C64	
	SEEQ	2764	
		5133	
	SGS	M2764	
	Signetics	27C64	
	SSS	SCM27C64	
	TI	TMS27C64	
	ThomsonCSF	ET2764	
	Toshiba	**TMM2764**	**4263**
MSM3716	Hitachi	HM4716A	
	ThomsonCSF	ET4116	
	Toshiba	TMM416	
MSM37256	AMD	MCM6256	
	AT&T	WCM41256	
	Fujitsu	MB81256	
	Hitachi	HM50256	
		HM50257	
	MicronTech	MT1256	
	Mitsubishi	M5M4256	
		MSM4257	
	Motorola	MCM6256	
		MCM6257	
	NEC	MPD41257	
		μPD41256	
	OKI	M5M37256	
		MSM41256	
	Panasonic	MM41256	
	TI	TMS4257	
	Toshiba	TMM41256	
	Samsung	KM1256	
MSM3764	Fairchild	F64K	
	Fujitsu	MB8264A	
		MB8266A	
	Hitachi	HM4864	
	Inmos	IMS2600	
			(Continued)
MSM3764	MicronTech	MT4264	
	Motorola	MCM4164B	
		MCM6665B	
	National	NMC4164	
	NEC	μPD4164	
	ThomsonCSF	ET4164	
	Toshiba	TMM4164	
	Samsung	KM4164	
MSM38256	AMD	AM92256	
	Fujitsu	MB83256	
	GI	R09256	
	GouldAMI	S23256	
		S38256	
	GTEMicro	G53256	
	Hitachi	HN613256	
	Mitsubishi	M5M23256	
	Mostek	MK38000	
	Motorola	MCM63256	
		MCM65256	
	NCR	NCR23256	
		NCR23257	
	NEC	UPD23256	
		UPD23256A	
		UPD23C256E	
	Panasonic	MN23256	
		MN23257	
	RCA	CDM52356	
		CDM53256	**1673,1678**
	S-MOS	**SMM2326**	**4178**
		SMM6325	**4178**
		SMM6326	**4178**
	Signetics	23256	
		23256A	
	SSS	SCM23C256	
	Supertex	CM2560	
	Toshiba	**TMM23256**	**4263**
	UMC	UM23256	
	VTI	23257	
		VT23256	
		VT23257	
MSM3864	AMD	AM9265	
	Fairchild	F3568	
		F3569	
		F3570	
	GI	RO3-9365	
		R09864	
	GouldAMI	S2364	
		S6364	
	GTEMicro	G5364	
	Hitachi	HN61364	
	Intel	2364A	
	Mitsubishi	M5M2364	
		M5M2365	
		M5M23C64	
	Mostek	MK37000	
	Motorola	MCM68369	
		MCM68370	
	National	MM52264	
		NM52264	
	Panasonic	MN2364	
		MN4864	
	RCA	**CDM5365**	**1673,1677**
	Rockwell	R2364B	
	SSS	SCM23C65	
	Supertex	23SC64	
		23SC64/A	
		CM6400	
	Synertek	SY2365/A	
	TI	TMS2364	
		TMS4764	
	Toshiba	TMM2365	
	UMC	UM2366	
	VTI	VT2365	
MSM4001	Fairchild	F4001	
	Motorola	MC14001	
	National	CD4001	
		MM74C02	
	RCA	CD4001	
	Sanyo	LC4001B	
	SGS	HCC/HCF4001	
	Signetics	HEF4001	
	Solitron	CM4001	
	SSS	SCL4001	
	Toshiba	TC4001	
◆MSM4002	Fairchild	F4002	
	Motorola	MC14002	
	National	CD4002	
	RCA	CD4002	
	SGS	HCC/HCF4002	
	Signetics	HEF4002	
			(Continued)
◆MSM4002	Solitron	CM4002	
	SSS	SCL4002	
	Toshiba	TC4002	
◆MSM4007	Fairchild	F4007	
	Motorola	MC14007	
	National	CD4007	
	RCA	CD4007	
	SGS	HCC/HCF4007	
	Signetics	HEF4007	
	Solitron	CM4007	
	SSS	SCL4007	
	Toshiba	TC4007	
◆MSM40104	RCA	CD40104	
	SGS	HCC/HCF40104	
MSM4011	Fairchild	F4011	
	Motorola	MC14011	
	National	CD4011	
		MM74C00	
	RCA	CD4011	
	Sanyo	LC4011	
	SGS	HCC/HCF4011	
	Signetics	HEF4011	
	Solitron	CM4011	
	SSS	SCL4011	
	Toshiba	TC4011	
MSM4013	Fairchild	F4013	
	Motorola	MC14013	
	National	CD4013	
		MM74C74	
	RCA	CD4013	
	Sanyo	LC4013	
	SGS	HCC/HCF4013	
	Signetics	HEF4013	
	Solitron	CM4013	
	SSS	SCL4013	
	Toshiba	TC4013	
◆MSM4014	Fairchild	F4014	
	Motorola	MC14014	
	National	CD4014	
	RCA	CD4014	
	SGS	HCC/HCF4014	
	Signetics	HEF4014	
	Solitron	CM4014	
	SSS	SCL4014	
	Toshiba	TC4014	
MSM4015	Fairchild	F4015	
	Motorola	MC14015	
	National	CD4015	
		MM74C164	
	RCA	CD4015	
	Sanyo	LC4015	
	SGS	HCC/HCF4015	
	Signetics	HEF4015	
	Solitron	CM4015	
	SSS	SCL4015	
	Toshiba	TC4015	
◆MSM4017	Fairchild	F4017	
	Motorola	MC14017	
	National	CD4017	
	RCA	CD4017	
	SGS	HCC/HCF4017	
	Signetics	HEF4017	
	Solitron	CM4017	
	SSS	SCL4017	
	Toshiba	TC4017	
MSM4019	Fairchild	F4019	
	National	CD4019	
	RCA	CD4019	
	Sanyo	LC4019	
	SGS	HCC/HCF4019	
	Signetics	HEF4019	
	Solitron	CM4019	
	SSS	SCL4019	
	Toshiba	TC4019	
◆MSM40192	Fairchild	F4029	
	Motorola	MC14029	
	National	CD40192	
		CD4029	
	RCA	CD40192	
		CD4029	
	SGS	HCC/HCF40192	
		HCC/HCF4029	
	Signetics	HEF40192	
	Solitron	CM4029	
	SSS	SCL4029	
		SCL4192	
	Toshiba	TC40192	
		TC4029	
◆MSM40193	Fairchild	F40193	
	National	CD40193	
		MM54C193	
		MM74C193	
			(Continued)
◆MSM40193	RCA	CD40193	
	SGS	HCC/HCF40193	
	Signetics	HEF40193	
	SSS	SCL4193	
	Toshiba	**TC40193**	**1363**
◆MSM40194	Fairchild	F40194	
	Motorola	MC14194	
	RCA	CD40194	
	SGS	HCC/HCF40194	
	Signetics	HEF40194	
◆MSM4020	Fairchild	F4020	
	Motorola	MC14020	
	National	CD4020	
	RCA	CD4020	
	SGS	HCC/HCF4020	
	Signetics	HEF4020	
	Solitron	CM4020	
	SSS	SCL4020	
	Toshiba	TC4020	
◆MSM4021	Fairchild	F4021	
	Motorola	MC14021	
	National	CD4021	
	RCA	CD4021	
	SGS	HCC/HCF4021	
	Signetics	HEF4021	
	SSS	SCL4021	
	Toshiba	TC4021	
◆MSM4022	Fairchild	F4022	
	Motorola	MC14022	
	National	CD4022	
	RCA	CD4022	
	SGS	HCC/HCF4022	
	Signetics	HEF4022	
	Solitron	CM4022	
	SSS	SCL4022	
	Toshiba	TC4022	
◆MSM4023	Fairchild	F4023	
	Motorola	MC14023	
	National	CD4023	
		MM74C10	
	RCA	CD4023	
	SGS	HCC/HCF4023	
	Signetics	HEF4023	
	Solitron	CM4023	
	SSS	SCL4023	
	Toshiba	TC4023	
◆MSM4024	Fairchild	F4024	
	Motorola	MC14024	
	National	CD4024	
	RCA	CD4024	
	SGS	HCC/HCF4024	
	Signetics	HEF4024	
	Solitron	CM4024	
	SSS	SCL4024	
	Toshiba	TC4024	
◆MSM4025	Fairchild	F4025	
	Motorola	MC14025	
	National	CD4025	
	RCA	CD4025	
	SGS	HCC/HCF4025	
	Signetics	HEF4025	
	Solitron	CM4025	
	SSS	SCL4025	
	Toshiba	TC4025	
MSM4027	Fairchild	F4027	
	Motorola	MC14027	
	National	CD4027	
		MM74C76	
	RCA	CD4027	
	Sanyo	LC4027	
	SGS	HCC/HCF4027	
	Signetics	HEF4027	
	Solitron	CM4027	
	SSS	SCL4027	
MSM4028	Fairchild	F4028	
	Motorola	MC14028	
	National	CD4028	
		MM74C42	
	RCA	CD4028	
	Sanyo	LC4028	
	SGS	HCC/HCF4028	
	Signetics	HEF4028	
	Solitron	CM4028	
	SSS	SCL4028	
	Toshiba	TC4028	
◆MSM4029	Fairchild	F4029	
	Motorola	MC14029	
	National	CD40192	
		CD4029	
	RCA	CD40192	
		CD4029	
	SGS	HCC/HCF40192	
			(Continued)

◆ Discontinued

Bold face device numbers indicate manufacturers data is provided in the IC Master on the pages noted.

OKI Semiconductor (Cont'd)

Manufacturer Device	Replacement Source	Device	IC Master Page
◆MSM4029	SGS	HCC/HCF4029	
	Signetics	HEF40192	
	Solitron	CM4029	
	SSS	SCL4029	
		SCL4192	
	Toshiba	TC40192	
		TC4029	
◆MSM4030	Fairchild	F4030	
	National	CD4030	
	RCA	CD4030	
	SGS	HCC/HCF4030	
	Signetics	HEF4030	
	Solitron	CM4030	
	SSS	SCL4030	
	Toshiba	TC4030	
◆MSM4035	Fairchild	F4035	
	Motorola	MC14035	
	RCA	CD4035	
	SGS	HCC/HCF4035	
	Signetics	HEF4035	
	Solitron	CM4035	
	Toshiba	TC4035	
◆MSM4036	RCA	CD4036	
	Solitron	CM4036	
	Toshiba	TC4036	
◆MSM4039	RCA	CD4039	
	Solitron	CM4039	
	Toshiba	TC4039	
◆MSM4040	Fairchild	F4040	
	Motorola	MC14040	
	National	CD4040	
	RCA	CD4040	
	SGS	HCC/HCF4040	
	Signetics	HEF4040	
	Solitron	CM4040	
	SSS	SCL4040	
	Toshiba	TC4040	
◆MSM4042	Fairchild	F4042	
	Motorola	MC14042	
	National	CD4042	
	RCA	CD4042	
	SGS	HCC/HCF4042	
	Signetics	HEF4042	
	Solitron	CM4042	
	SSS	SCL4042	
	Toshiba	TC4042	
◆MSM4043	Motorola	MC14043	
	National	CD4043	
	RCA	CD4043	
	SGS	HCC/HCF4043	
	Signetics	HEF4043	
	Solitron	CM4043	
	SSS	SCL4043	
	Toshiba	TC4043	
◆MSM4044	Fairchild	F4044	
	Motorola	MC14044	
	National	CD4044	
	RCA	CD4044	
	SGS	HCC/HCF4044	
	Signetics	HEF4044	
	Solitron	CM4044	
	Toshiba	TC4044	
MSM4049	Fairchild	F4049	
	Motorola	MC14049	
	National	CD4049	
	RCA	CD4049	
	Sanyo	LC4049	
	SGS	HCC/HCF4049	
	Signetics	HEF4049	
	Solitron	CM4049	
	SSS	SCL4049	
	Toshiba	TC4049	
◆MSM4054	RCA	CD4054	
	SGS	HCC/HCF4054	
	Toshiba	TC4054	
◆MSM4063	RCA	CD4063	
	SGS	HCC/HCF4063	
	Toshiba	TC4063	
◆MSM4068	Fairchild	F4068	
	Motorola	MC14068	
	RCA	CD4068	
	SGS	HCC/HCF4068	
	Signetics	HEF4068	
	Solitron	CM4068	
	SSS	SCL4068	
	Toshiba	TC4068	
MSM4069	Fairchild	F4069	
	Motorola	MC14069	
	National	CD4069	
		MM54C04	
		(Continued)	
MSM4069	National	MM74C04	
	RCA	CD4069	
	Sanyo	LC4069	
	SGS	HCC/HCF4069	
	Signetics	HEF4069	
	Solitron	CM4069	
	SSS	SCL4069	
		SCL4449	
	Toshiba	TC4069	
MSM4071	Fairchild	F4071	
	Motorola	MC14071	
	National	CD4071	
		MM74C32	
	RCA	CD4071	
	Sanyo	LC4071	
	SGS	HCC/HCF4071	
	Signetics	HEF4071	
	Solitron	CM4071	
	SSS	SCL4071	
	Toshiba	TC4071	
◆MSM4072	Fairchild	F4072	
	Motorola	MC14072	
	National	CD4072	
	RCA	CD4072	
	SGS	HCC/HCF4072	
	Signetics	HEF4072	
	SSS	SCL4072	
	Toshiba	TC4072	
◆MSM4073	Fairchild	F4073	
	Motorola	MC14073	
	National	CD4073	
	RCA	CD4073	
	SGS	HCC/HCF4073	
	Signetics	HEF4073	
	Solitron	CM4073	
	SSS	SCL4073	
	Toshiba	TC4073	
◆MSM4075	Fairchild	F4075	
	Motorola	MC14075	
	National	CD4075	
	RCA	CD4075	
	SGS	HCC/HCF4075	
	Signetics	HEF4075	
	Solitron	CM4075	
	SSS	SCL4075	
	Toshiba	TC4075	
◆MSM4078	Fairchild	F4078	
	Motorola	MC14078	
	RCA	CD4078	
	SGS	HCC/HCF4078	
	Signetics	HEF4078	
	Solitron	CM4078	
	SSS	SCL4078	
	Toshiba	TC4078	
MSM4081	Fairchild	F4081	
	Motorola	MC14081	
	National	CD4081	
		MM74C08	
	RCA	CD4081	
	Sanyo	LC4081	
	SGS	HCC/HCF4081	
	Signetics	HEF4081	
	Solitron	CM4081	
	SSS	SCL4081	
	Toshiba	TC4081	
◆MSM4082	Fairchild	F4082	
	Motorola	MC14082	
	National	CD4082	
	RCA	CD4082	
	SGS	HCC/HCF4082	
	Signetics	HEF4082	
	SSS	SCL4082	
	Toshiba	TC4082	
MSM41256	AMD	MCM6256	
	AT&T	WCM41256	
	Fujitsu	MB81256	
	Hitachi	HM50256	
		HM50257	
	MicronTech	MT1256	
	Mitsubishi	M5M4256	
		MSM4257	
	Motorola	MCM6256	
		MCM6257	
	NEC	MPD41257	
		µPD41256	
	OKI	M5M37256	
		MSM37256	
	Panasonic	MM41256	
	TI	TMS4257	
	Toshiba	TMM41256	
	Samsung	KM1256	
◆MSM4502	Motorola	MC14502	
	RCA	CD4502	
	SGS	HCC/HCF4502	
	Signetics	HEF4502	
	SSS	SCL4502	
◆MSM4510	Fairchild	F4510	
	Motorola	MC14510	
	National	CD4510	
	RCA	CD4510	
	SGS	HCC/HCF4510	
	Signetics	HEF4510	
	Solitron	CM4510	
	SSS	SCL4510	
	Toshiba	TC4510	
◆MSM4511	Fairchild	F4511	
	Mitel	MD4511	
	MMI	4511	
	Motorola	MC14511	
	National	CD4511	
	NEC	µPD4511	
	RCA	CD4511	
	SGS	HCC/HCF4511	
	Signetics	HEF4511	
	Solitron	CM4511	
	SSS	SCL4511	
	Toshiba	TC4511	
◆MSM4512	Fairchild	F4512	
	Motorola	MC14512	
	National	CD4512	
	RCA	CD4512	
	SGS	HCC/HCF4512	
	SSS	SCL4512	
	Toshiba	TC4512	
◆MSM4514	Fairchild	F4514	
	Motorola	MC14514	
	National	CD4514	
	RCA	CD4514	
	SGS	HCC/HCF4514	
	Signetics	HEF4514	
	Solitron	CM4514	
	SSS	SCL4514	
	Toshiba	TC4514	
◆MSM4515	Fairchild	F4515	
	Motorola	MC14515	
	National	CD4515	
	RCA	CD4515	
	SGS	HCC/HCF4515	
	Signetics	HEF4515	
	Solitron	CM4515	
	SSS	SCL4515	
	Toshiba	TC4515	
◆MSM4516	Fairchild	F4516	
	Motorola	MC14516	
	National	CD4516	
	RCA	CD4516	
	SGS	HCC/HCF4516	
	Signetics	HEF4516	
	Solitron	CM4516	
	SSS	SCL4516	
	Toshiba	TC4516	
◆MSM4518	Fairchild	F4518	
	Motorola	MC14518	
	National	CD4518	
	RCA	CD4518	
	SGS	HCC/HCF4518	
	Signetics	HEF4518	
	Solitron	CM4518	
	SSS	SCL4518	
	Toshiba	TC4518	
MSM4520	Fairchild	F4520	
	Motorola	MC14520	
	National	CD4520	
	RCA	CD4520	
	Sanyo	LC4520	
	SGS	HCC/HCF4520	
	Signetics	HEF4520	
	Solitron	CM4520	
	SSS	SCL4520	
	Toshiba	TC4520	
◆MSM4532	Fairchild	F4532	
	Motorola	MC14532	
	RCA	CD4532	
	SGS	HCC/HCF4532	
	Signetics	HEF4532	
	SSS	SCL4532	
	Toshiba	TC4532	
MSM4538	Motorola	MC14538	
	National	CD4538	
	Signetics	HEF4538	
◆MSM4539	Fairchild	F4539	
	Motorola	MC14539	
		(Continued)	
◆MSM4539	Signetics	HEF4539	
	Toshiba	TC4539	
◆MSM4555	Fairchild	F4555	
	Motorola	MC14555	
	RCA	CD4555	
	SGS	HCC/HCF4555	
	Signetics	HEF4555	
	SSS	SCL4555	
	Toshiba	TC4555	
◆MSM4556	Fairchild	F4556	
	Motorola	MC14556	
	RCA	CD4556	
	SGS	HCC/HCF4556	
	Signetics	HEF4556	
	SSS	SCL4556	
	Toshiba	TC4556	
◆MSM4583	Fairchild	F4583	
	Motorola	MC14583	
	Toshiba	TC4583	
◆MSM4584	Fairchild	F40014	
	Motorola	MC14584	
	National	CD40106	
		CD4584	
		MM54C14	
		MM74C14	
	RCA	CD40106	
	SGS	HCC/HCF40106	
	Signetics	HEF40106	
	SSS	SCL4584	
MSM5104	Cypress	CY2147	
		CY7C147	
	Hitachi	HM6147	
	Intel	2141	
		2147	
		2147-3	
	Motorola	MCM6147	
		MCM61L47	
	National	MM2147	
		NMC2141	
	NEC	MPD2147	
	TI	TMS2147	
	Toshiba	TMM3150	
	UMC	UM2147	
◆MSM5115	Harris	HM6514	
	Hitachi	6148	
		HM4334	
	Mitsubishi	58981	
	Motorola	6514	
	NEC	444	
	OKI	5114	
	RCA	MWS5514	
	Rockwell	R6514	
	Synertek	SY6514	
	Toshiba	TC5514	
MSM5128	AMD	AM9128	
		AM9218	
	Cypress	CY7C128	
	Fujitsu	MB8128	
		MB8416	
	Harris	HM6116	
		HM6516	
	IDT	IDT6116	
	Intel	2128	
	MicrpPwr	MP6116	
	Mitsubishi	M58275	
		M5M116	
		M5M5116	
		M5M5117	
		M5M5118	
		MS8725	
	Motorola	MCM2016	
		MCM2016H	
		MCM2128	
		MCM6116	**4119**
		MCM61L16	**4119**
		MCM65116	
	National	MMC2116	
	NEC	µPD4016	
	OKI	MSM2128	
	RCA	MWS6116A	
	SSS	883C21C16	
		BCM21C16	
		SCM21C16	
		SCM6116	
	TI	TMS4016	
	ThomsonCSF	ET2128	
	Toshiba	**TC5516A**	**4263**
		TMM2015A	
		TMM2016	
		TMM2016A	**4263**
	Samsung	KM6816	
		(Continued)	

◆ Discontinued

The manufacturers report their devices can be used as direct replacements.
Performance details often differ, so compare the specifications considering your requirements.

OKI Semiconductor (Cont'd)

Manufacturer Device	Replacement Source	Device	IC Master Page
MSM5128	UMC	UM2128	
	Universal	US574HC133	
MSM5164	AMD	AM9988	
		AM9988C	
	Cypress	CY7C186	
	Fujitsu	MB8464	
		MB8464A	
	Hitachi	HM6264	
		HM6464	
	IDT	IDT7188	
		IDT7M864	
	Mitsubishi	M5M5165	
	Motorola	MCM6164	
	NEC	μPD4364	
		μPD4464	
	OKI	MSM5165	
	RCA	CDM6264	
	S-MOS	SRM2064	
		SRM2264	**4177.4178**
	Sharp	LH5164	
	Toshiba	TC5564	
		TC5565	
		TMM2063	
		TMM2064	
	Samsung	KM6264	
MSM5165	AMD	AM9988	
		AM9988C	
	Cypress	CY7C186	
	Fujitsu	MB8464	
		MB8464A	
	Hitachi	HM6264	
		HM6464	
	IDT	IDT7188	
		IDT7M864	
	Mitsubishi	M5M5165	
	Motorola	MCM6164	
	NEC	μPD4364	
		μPD4464	
	OKI	MSM5164	
	RCA	CDM6264	
	S-MOS	SRM2064	
		SRM2264	**4177.4178**
	Sharp	LH5164	
	Toshiba	TC5564	
		TC5565	
		TMM2063	
		TMM2064	
	Samsung	KM6264	
MSM82C51A	AMD	8251	
	Intel	P8251	
	NEC	UPD8251A/AF	
	S-MOS	SMC82C51AC	
	Toshiba	TMP8251	
MSM82C55A	Harris	82C55	
		CP82C55A	
	Intel	8255	
		82C55	
		P8255	
	NEC	UPD71055	
		UPD8255A	
	OKI	82C55	
	S-MOS	SMC82C55AC	
	Toshiba	TMP8255	
		TMP82C55	**1750**
MSM82C59A	AMD	D8259	
	Fujitsu	MBL8259	
	Harris	**82C59A**	**682.1619.1621.1631**
		CP82C59A	
	Intel	8259	
		82C59A	
	National	INS8259	
	NEC	UPD8259A/A-2	
	Nitron	NC82C59A	
	S-MOS	SMC82C59AC	
	Toshiba	TMP8259	

Optical Electronics Inc.

Manufacturer Device	Replacement Source	Device	IC Master Page
9910	Elantec	EL2002	
		EL2003	**3537.3539**
		ELH0002	**3537**
	LinearTech	LT1010	
	Micra	MC0002	
		MC0021	
	National	LH0002	
	TeledyneC	LH0002	
◆9932	**Elantec**	**EL2006**	**3537.3542**
		ELH0032	**3537**
	Harris	HA2541	
	Micra	MC0032	
	National	LH0032	
	TeledyneC	LH0032	
	TeledyneP	0032	
9963	Maxim	LH0063	
	National	LH0063	
AH0605	**Burr-Brown**	**OPA605**	**3150**

Panasonic

Manufacturer Device	Replacement Source	Device	IC Master Page
DN74LS00	**Fairchild**	**74LS00**	**5311**
	Hitachi	HD74LS00	
	Motorola	**SN74LS00**	**1122**
	National	DM74LS00	
	SGS	T74LS00	
	Signetics	**74LS00**	**1156**
	TI	SN74LS00	
DN74LS01	Fairchild	74LS01	
	Hitachi	HD74LS01	
	Motorola	**SN74LS01**	**1122**
	National	DM74LS01	
	Signetics	**74LS01**	**1156**
	TI	SN74LS01	
DN74LS02	**Fairchild**	**74LS02**	**5311**
	Hitachi	HD74LS02	
	Motorola	**SN74LS02**	**1122**
	National	DM74LS02	
	SGS	T74LS02	
	Signetics	**74LS02**	**1156**
	TI	SN74LS02	
DN74LS03	**Fairchild**	**74LS03**	**5311**
	Hitachi	HD74LS03	
	Motorola	**SN74LS03**	**1122**
	National	DM74LS03	
	SGS	T74LS03	
	TI	SN74LS03	
DN74LS04	**Fairchild**	**74LS04**	**5311**
	Hitachi	HD74LS04	
	Motorola	**SN74LS04**	**1124**
	National	DM74LS04	
	SGS	T74LS04	
	Signetics	**74LS04**	**1156**
	TI	SN74LS04	
DN74LS05	**Fairchild**	**74LS05**	**5311**
	Hitachi	HD74LS05	
	Motorola	**SN74LS05**	**1124**
	National	DM74LS05	
	SGS	T74LS05	
	Signetics	**74LS05**	**1156**
	TI	SN74LS05	
DN74LS08	**Fairchild**	**74LS08**	**5311**
	Hitachi	HD74LS08	
	Motorola	**SN74LS08**	**1122**
	National	DM74LS08	
	SGS	T74LS08	
	Signetics	**74LS08**	**1156**
	TI	SN74LS08	
DN74LS09	**Fairchild**	**74LS09**	**5311**
	Hitachi	HD74LS09	
	Motorola	**SN74LS09**	**1122**
	National	DM74LS09	
	SGS	T74LS09	
	TI	SN74LS09	
DN74LS10	**Fairchild**	**74LS10**	**5311**
	Hitachi	HD74LS10	
	Motorola	**SN74LS10**	**1122**
	National	DM74LS10	
	SGS	T74LS10	
	Signetics	**74LS10**	**1156**
	TI	SN74LS10	
DN74LS109	**Fairchild**	**74LS109**	**5311**
	Hitachi	HD74LS109	
	Motorola	SN74LS109	
		SN74LS109A	**1126**
	National	DM74LS109	
	SGS	T74LS109	
	Signetics	**74LS109**	**1156**
	TI	SN74LS109A	
DN74LS11	**Fairchild**	**74LS11**	**5311**
	Hitachi	HD74LS11	
	Motorola	**SN74LS11**	**1122**
	National	DM74LS11	
	SGS	T74LS11	
	Signetics	**74LS11**	**1156**
	TI	SN74LS11	
DN74LS112	**Fairchild**	**74LS112**	**5311**
	Hitachi	HD74LS112	
	Motorola	**SN74LS112A**	**1126**
	National	DM74LS112	
	SGS	T74LS112	
	Signetics	**74LS112**	**1156**
	TI	SN74LS112A	
DN74LS113	**Fairchild**	**74LS113**	**5311**
	Hitachi	HD74LS113	
	Motorola	**SN74LS113A**	**1126**
	National	DM74LS113	
	SGS	T74LS113	
	Signetics	**74LS113**	**1156**
	TI	SN74LS113A	
DN74LS114	**Fairchild**	**74LS114**	**5311**
	Hitachi	HD74LS114	
	Motorola	**SN74LS114A**	**1126**
	National	DM74LS114	
	SGS	T74LS114	
	TI	SN74LS114A	
DN74LS12	Hitachi	HD74LS12	
	Motorola	**SN74LS12**	**1122**
	National	DM74LS12	
	Signetics	74LS12	
	TI	SN74LS12	
DN74LS123	Hitachi	HD74LS123	
	Motorola	**SN74LS123**	**1131**
	National	DM74LS123	
	TI	SN74LS123	
DN74LS125A	Fairchild	74LS125A	
	Motorola	**SN74LS125A**	**1124**
	National	DM74LS125	
	SGS	T74LS125	
	Signetics	**74LS125A**	**1157**
	TI	SN74LS125A	
DN74LS13	**Fairchild**	**74LS13**	**5311**
	Hitachi	HD74LS13	
	Motorola	**SN74LS13**	**1125**
	National	DM74LS13	
	SGS	T74LS13	
	Signetics	**74LS13**	**1156**
	TI	SN74LS13	
DN74LS132	**Fairchild**	**74LS132**	**5311**
	Hitachi	HD74LS132	
	Motorola	**SN74LS132**	**1125**
	National	DM74LS132	
	SGS	T74LS132	
	Signetics	**74LS132**	**1157**
	TI	SN74LS132	
DN74LS136	**Fairchild**	**74LS136**	**5311**
	Hitachi	HD74LS136	
	Motorola	**SN74LS136**	**1123**
	National	DM74LS136	
	SGS	T74LS136	
	Signetics	**74LS136**	**1157**
	TI	SN74LS136	
DN74LS138	**Fairchild**	**74LS138**	**5311**
	Hitachi	HD74LS138	
	Motorola	**SN74LS138**	**1130**
	National	DM74LS138	
	SGS	T74LS138	
	Signetics	**74LS138**	**1157**
	TI	SN74LS138	
DN74LS139	**Fairchild**	**74LS139**	**5311**
	Hitachi	HD74LS139	
	Motorola	**SN74LS139**	**1130**
	National	DM74LS139	
	SGS	T74LS139	
	Signetics	**74LS139**	**1157**
	TI	SN74LS139A	
DN74LS14	**Fairchild**	**74LS14**	**5311**
	Hitachi	HD74LS14	
	Motorola	**SN74LS14**	**1125**
	National	DM74LS14	
	Signetics	**74LS14**	**1156**
	TI	SN74LS14	
DN74LS145	Fairchild	74LS145	
	Motorola	**SN74LS145**	**1130**
	TI	SN74LS145	
DN74LS15	**Fairchild**	**74LS15**	**5311**
	Motorola	**SN74LS15**	**1122**
	National	DM74LS15	
	SGS	T74LS15	
	TI	SN74LS15	
DN74LS151	**Fairchild**	**74LS151**	**5311**
	Hitachi	HD74LS151	
		HD74LS151A	
	Motorola	**SN74LS151**	**1129**
	National	DM74LS151	
	SGS	T74LS151	
	Signetics	**74LS151**	**1157**
	TI	SN74LS151	
DN74LS153	**Fairchild**	**74LS153**	**5311**
	Hitachi	HD74LS153	
	Motorola	**SN74LS153**	**1129**
	National	DM74LS153	
	SGS	T74LS153	
	Signetics	**74LS153**	**1157**
	TI	SN74LS153	
DN74LS155	**Fairchild**	**74LS155**	**5311**
	Hitachi	HD74LS155	
	Motorola	**SN74LS155**	**1130**
	National	DM74LS155	
	Signetics	**74LS155**	**1157**
	TI	SN74LS155A	
DN74LS156	**Fairchild**	**74LS156**	**5311**
	Hitachi	HD74LS156	
	Motorola	**SN74LS156**	**1130**
	National	DM74LS156	
	SGS	T74LS156	
	Signetics	**74LS156**	**1157**
	TI	SN74LS156	
DN74LS157	**Fairchild**	**74LS157**	**5311**
	Hitachi	HD74LS157	
	Motorola	**SN74LS157**	**1129**
	National	DM74LS157	
	SGS	T74LS157	
	Signetics	**74LS157**	**1157**
	TI	SN74LS157	
DN74LS158	**Fairchild**	**74LS158**	**5311**
	Hitachi	HD74LS158	
	Motorola	**SN74LS158**	**1129**
	National	DM74LS158	
	SGS	T74LS158	
	Signetics	**74LS158**	**1157**
	TI	SN74LS158	
DN74LS160A	**Fairchild**	**74LS160**	**5311**
	Hitachi	HD74LS160A	
	Motorola	**SN74LS160A**	**1127**
	National	DM74LS160	
	SGS	T74LS160	
	Signetics	74LS160	
		74LS160A	**1157**
	TI	SN74LS160A	
DN74LS161A	Fairchild	74LS161A	
	Hitachi	HD74LS161A	
	Motorola	**SN74LS161A**	**1127**
	National	DM74LS161	
	SGS	T74LS161	
	Signetics	**74LS161A**	**1157**
	TI	SN74LS161A	
DN74LS162A	**Fairchild**	**74LS162**	**5311**
	Hitachi	HD74LS162A	
	Motorola	**SN74LS162A**	**1127**
	National	DM74LS162	
	SGS	T74LS162	
	Signetics	**74LS162A**	**1157**
	TI	SN74LS162A	
DN74LS163A	**Fairchild**	**74LS163**	**5311**
	Hitachi	HD74LS163	
		HD74LS163A	
	Motorola	**SN74LS163A**	**1127**
	National	DM74LS163	
	SGS	T74LS163	
	Signetics	**74LS163A**	**1157**
	TI	SN74LS163A	
DN74LS164	**Fairchild**	**74LS164**	**5311**
	Hitachi	HD74LS164	
	Motorola	SN74LS164A	
	National	DM74LS164	
	SGS	T74LS164	
	Signetics	**74LS164**	**1157**
		74LS164A	
	TI	SN74LS164	
DN74LS170	**Fairchild**	**74LS170**	**5311**
	Motorola	**SN74LS170**	**1128**
	National	DM74LS170	
	SGS	T74LS170	
	Signetics	**74LS170**	**1157**
	TI	SN74LS170	
DN74LS173	Fairchild	74LS173	
	Motorola	**SN74LS173A**	**1126**
	National	DM74LS173	
	SGS	T74LS173	
	Signetics	**74LS173**	**1157.1158**
	TI	SN74LS173A	
DN74LS174	**Fairchild**	**74LS174**	**5311**
	Hitachi	HD74LS174	
	Motorola	**SN74LS174**	**1126**
	National	DM74LS174	
	SGS	T74LS174	
	Signetics	**74LS174**	**1157**
	TI	SN74LS174	
DN74LS175	**Fairchild**	**74LS175**	**5311**
	Hitachi	HD74LS175	
	Motorola	**SN74LS175**	**1126**
	SGS	T74LS175	

(Continued)

◆ Discontinued

Bold face device numbers indicate manufacturers data is provided in the IC Master on the pages noted.

ALTERNATE SOURCE DIRECTORY

Panasonic (Cont'd)

Manufacturer Device	Replacement Source	Device	IC Master Page
DN74LS175	Signetics	74LS175	
	TI	SN74LS175	
DN74LS190	Fairchild	74LS190	
	Hitachi	HD74LS190	
	Motorola	**SN74LS190**	**1127**
	National	DM74LS190	
	SGS	T74LS190	
	TI	SN74LS190	
DN74LS191	Fairchild	74LS191	
	Hitachi	HD74LS191	
	Motorola	**SN74LS191**	**1127**
	National	DM74LS191	
	SGS	T74LS191	
	Signetics	**74LS191**	**1157**
	TI	SN74LS191	
DN74LS192	**Fairchild**	**74LS192**	**5311**
	Hitachi	HD74LS192	
	Motorola	**SN74LS192**	**1127**
	National	DM74LS192	
	SGS	T74LS192	
	Signetics	**74LS192**	**1157**
	TI	SN74LS192	
DN74LS193	**Fairchild**	**74LS193**	**5311**
	Hitachi	HD74LS193	
	Motorola	**SN74LS193**	**1127**
	National	DM74LS193	
	SGS	T74LS193	
	Signetics	**74LS193**	**1157**
	TI	SN74LS193	
DN74LS194A	**Fairchild**	**74LS194A**	**5311**
	Hitachi	HD74LS194A	
	Motorola	**SN74LS194A**	**1128**
	National	DM74LS194	
	SGS	T74LS194A	
	Signetics	**74LS194A**	**1157**
	TI	SN74LS194A	
DN74LS195A	**Fairchild**	**74LS195A**	**5311**
	Hitachi	HD74LS195A	
	Motorola	**SN74LS195A**	**1128**
	National	DM74LS195	
	SGS	L7924	
		T74LS195A	
	Signetics	**74LS195A**	**1157**
	TI	SN74LS195A	
DN74LS196	**Fairchild**	**74LS196**	**5311**
	Hitachi	HD74LS196	
	Motorola	**SN74LS196**	**1127**
	National	DM74LS196	
	SGS	574LS196	
	Signetics	N82S80	
	TI	SN74LS196	
DN74LS197	**Fairchild**	**74LS197**	**5311**
	Hitachi	HD74LS197	
	Motorola	**SN74LS197**	**1127**
	National	DM74LS197	
	SGS	T74LS197	
	Signetics	**74LS197**	**1157**
	TI	SN74LS197	
DN74LS20	**Fairchild**	**74LS20**	**5311**
	Hitachi	HD74LS20	
	Motorola	**SN74LS20**	**1122**
	National	DM74LS20	
	SGS	T74LS20	
	Signetics	**74LS20**	**1156**
	TI	SN74LS20	
DN74LS21	**Fairchild**	**74LS21**	**5311**
	Hitachi	HD74LS21	
	Motorola	**SN74LS21**	**1122**
	National	DM74LS21	
	SGS	T74LS21	
	Signetics	**74LS21**	**1156**
	TI	SN74LS21	
DN74LS22	Fairchild	74LS22	
	Hitachi	HD74LS22	
	Motorola	**SN74LS22**	**1122**
	National	DM74LS22	
	SGS	T74LS22	
	TI	SN74LS22	
DN74LS240	**Fairchild**	**74LS240**	**5311**
	Hitachi	HD74LS240	
	MMI	SN74LS240	
	Motorola	**SN74LS240**	**1124**
	SGS	T74LS240	
	Signetics	**74LS240**	**1157**
	TI	SN74LS240	
DN74LS241	**Fairchild**	**74LS241**	**5311**
	Hitachi	HD74LS241	
	MMI	SN74LS241	
	Motorola	**SN74LS241**	**1124**
	SGS	T74LS241	
DN74LS241	**Signetics**	**74LS241**	**1157**
	TI	SN74LS241	
DN74LS244	**Fairchild**	**74LS244**	**5311**
	Hitachi	HD74LS244	
	MMI	SN74LS244	
	Motorola	**SN74LS244**	**1124**
	SGS	T74LS244	
	Signetics	**74LS244**	**1158**
	TI	SN74LS244	
DN74LS251	**Fairchild**	**74LS251**	**5311**
	Hitachi	HD74LS251	
	Motorola	**SN74LS251**	**1129**
	National	DM74LS251	
	SGS	T74LS251	
	Signetics	**74LS251**	**1158**
	TI	SN74LS251	
DN74LS253	**Fairchild**	**74LS253**	**5311**
	Hitachi	HD74LS253	
	Motorola	**SN74LS253**	**1129**
	National	DM74LS253	
		DM8214	
	SGS	T74LS253	
	Signetics	**74LS253**	**1158**
	TI	SN74LS253	
DN74LS258A	Fairchild	74LS258A	
	Hitachi	HD74LS258	
	Motorola	**SN74LS258A**	**1129**
	National	DM74LS258	
	SGS	T74LS258	
	Signetics	74LS258	
	TI	SN74LS258B	
DN74LS26	**Fairchild**	**74LS26**	**5311**
	Hitachi	HD74LS26	
	Motorola	**SN74LS26**	**1122**
	National	DM74LS26	
	SGS	T74LS26	
	Signetics	**74LS26**	**1156**
	TI	SN74LS26	
DN74LS260	SGS	T74LS260	
	TI	SN74LS260	
DN74LS266	**Fairchild**	**74LS266**	**5311**
	Motorola	**SN74LS266**	**1123**
	National	DM74LS266	
	Raytheon	RC8242	
	SGS	T74LS266	
	Signetics	**74LS266**	**1158**
		N8242	**1175**
	TI	SN74LS266	
DN74LS27	**Fairchild**	**74LS27**	**5311**
	Hitachi	HD74LS27	
	Motorola	**SN74LS27**	**1122**
	National	DM74LS27	
	SGS	T74LS27	
	Signetics	**74LS27**	**1156**
	TI	SN74LS27	
DN74LS279	**Fairchild**	**74LS279**	**5311**
	Hitachi	HD74LS279	
	Motorola	**SN74LS279**	**1126**
	National	DM74LS279	
	SGS	T74LS279	
	Signetics	74LS279	
	TI	SN74LS279A	
DN74LS280	Hitachi	HD74LS280	
	Motorola	**SN74LS280**	**1132**
	SGS	T74LS280	
	TI	SN74LS280	
DN74LS283	**Fairchild**	**74LS283**	**5311**
	Hitachi	HD74LS283	
		HD74LS283A	
	Motorola	**SN74LS283**	**1132**
	National	DM74LS283	
	SGS	T74LS283	
	Signetics	**74LS283**	**1158**
	TI	SN74LS283	
DN74LS290	**Fairchild**	**74LS290**	**5311**
	Hitachi	HD74LS290	
	Motorola	**SN74LS290**	**1127**
	National	DM74LS290	
	SGS	T74LS290	
	Signetics	**74LS290**	**1158**
	TI	SN74LS290	
DN74LS293	**Fairchild**	**74LS293**	**5311**
	Hitachi	HD74LS293	
	Motorola	**SN74LS293**	**1127**
	National	DM74LS293	
	SGS	T74LS293	
	Signetics	**74LS293**	**1158**
	TI	SN74LS293	
DN74LS30	**Fairchild**	**74LS30**	**5311**
	Hitachi	HD74LS30	
	Motorola	**SN74LS30**	**1122**
	National	DM74LS30	
DN74LS30	SGS	T74LS30	
	Signetics	**74LS30**	**1156**
	TI	SN74LS30	
DN74LS33	**Fairchild**	**74LS33**	**5311**
	Motorola	**SN74LS33**	**1122**
	SGS	T74LS33	
	Signetics	**74LS33**	**1156**
	TI	SN74LS33	
DN74LS365A	Fairchild	74LS365A	
	Motorola	**SN74LS365A**	**1124**
	National	DM74LS365	
	SGS	T74LS365	
		T74LS365A	
	Signetics	74LS365	
		74LS365A	**1158**
	TI	SN74LS365A	
DN74LS366A	Fairchild	74LS366A	
	Motorola	**SN74LS366A**	**1124**
	National	DM74LS366	
	SGS	T74LS366	
		T74LS366A	
	Signetics	**74LS366A**	**1158**
	TI	SN74LS366A	
DN74LS367A	Fairchild	74LS367A	
	Hitachi	HD74LS367	
		HD74LS367A	
	Motorola	**SN74LS367A**	**1124**
	National	DM74LS367	
	SGS	T74LS367	
		T74LS367A	
	Signetics	74LS367	
		74LS367A	**1158**
	TI	SN74LS367A	
DN74LS368A	Fairchild	74LS368A	
	Hitachi	HD74LS368	
	Motorola	**SN74LS368A**	**1124**
	National	DM74LS368	
	SGS	T74LS368	
	Signetics	74LS368	
		74LS368A	**1158**
	TI	SN74LS368A	
DN74LS37	**Fairchild**	**74LS37**	**5311**
	Hitachi	HD74LS37	
	Motorola	**SN74LS37**	**1122**
	National	DM74LS37	
	SGS	T74LS37	
	Signetics	**74LS37**	**1156**
	TI	SN74LS37	
DN74LS373	**Fairchild**	**74LS373**	**5311**
	MMI	SN74LS373	
	Motorola	**SN74LS373**	**1126**
	SGS	T74LS373	
	Signetics	**74LS373**	**1158**
	TI	SN74LS373	
DN74LS38	**Fairchild**	**74LS38**	**5311**
	Hitachi	HD74LS38	
	Motorola	**SN74LS38**	**1122**
	National	DM74LS38	
	SGS	T74LS38	
	Signetics	**74LS38**	**1156**
	TI	SN74LS38	
DN74LS386	Hitachi	HD74LS386	
	Motorola	**SN74LS386**	**1123**
	National	DM74LS386	
	TI	SN74LS386A	
DN74LS390	**Fairchild**	**74LS390**	**5311**
	Motorola	**SN74LS390**	**1127**
	SGS	T74LS390	
	TI	SN74LS390	
DN74LS393	**Fairchild**	**74LS393**	**5311**
	Motorola	**SN74LS393**	**1127**
	SGS	T74LS393	
	Signetics	**74LS393**	**1158**
	TI	SN74LS393	
DN74LS395A	**Fairchild**	**74LS395**	**5311**
	National	DM74LS395	
	SGS	T74LS395	
	Signetics	74LS395	
	TI	SN74LS395A	
DN74LS40	**Fairchild**	**74LS40**	**5311**
	Hitachi	HD74LS40	
	Motorola	**SN74LS40**	**1122**
	National	DM74LS40	
	SGS	T74LS40	
	Signetics	**74LS40**	**1156**
	TI	SN74LS40	
DN74LS42	**Fairchild**	**74LS42**	**5311**
	Hitachi	HD74LS42	
	Motorola	**SN74LS42**	**1130**
	National	DM74LS42	
	SGS	T74LS42	
DN74LS42	**Signetics**	**74LS42**	**1156**
	TI	SN74LS42	
DN74LS490	**Fairchild**	**74LS490**	**5311**
	Motorola	**SN74LS490**	**1127**
	SGS	T74LS490	
	Signetics	**74LS490**	**1159**
	TI	SN74LS490	
DN74LS51	**Fairchild**	**74LS51**	**5311**
	Hitachi	HD74LS51	
	Motorola	**SN74LS51**	**1123**
	National	DM74LS51	
	SGS	T74LS51	
	Signetics	**74LS51**	**1156**
	TI	SN74LS51	
DN74LS54	**Fairchild**	**74LS54**	**5311**
	Hitachi	HD74LS54	
	Motorola	**SN74LS54**	**1123**
	National	DM74LS54	
	SGS	T74LS54	
	Signetics	**74LS54**	**1156**
	TI	SN74LS54	
DN74LS55	**Fairchild**	**74LS55**	**5311**
	Hitachi	HD74LS55	
	Motorola	**SN74LS55**	**1123**
	National	DM74LS55	
	SGS	T74LS55	
	TI	SN74LS55	
DN74LS73	Hitachi	HD74LS73	
	Motorola	**SN74LS73A**	**1126**
	National	DM74LS73	
	Signetics	**74LS73**	**1156**
	TI	SN74LS73A	
DN74LS74A	**Fairchild**	**74LS74**	**5311**
	Hitachi	HD74LS74	
		HD74LS74A	
	Motorola	**SN74LS74A**	**1126**
	National	DM74LS74	
	SGS	T74LS74	
	Signetics	74LS74	
	TI	SN74LS74A	
DN74LS75	Hitachi	HD74LS75	
	Motorola	**SN74LS75**	**1126**
	National	DM74LS75	
	Signetics	**74LS75**	**1156**
	TI	SN74LS75	
DN74LS76	Hitachi	HD74LS76	
	Motorola	**SN74LS76A**	**1126**
	National	DM74LS76	
	Signetics	**74LS76**	**1156**
	TI	SN74LS76A	
DN74LS78	Hitachi	HD74LS78	
	Motorola	**SN74LS78A**	**1126**
	National	DM74LS78	
	TI	SN74LS78A	
DN74LS83A	Fairchild	74LS83A	
	Hitachi	HD74LS183A	
		HD74LS83A	
	Motorola	**SN74LS83A**	**1132**
	National	DM74LS83A	
	SGS	T74LS83	
	Signetics	74LS83	
		74LS83A	**1156**
	TI	SN74LS83A	
DN74LS85	**Fairchild**	**74LS85**	**5311**
	Hitachi	HD74LS85	
	Motorola	**SN74LS85**	**1131**
	National	DM74LS85	
	Signetics	**74LS85**	**1156**
	TI	SN74LS85	
DN74LS86	**Fairchild**	**74LS86**	**5311**
	Hitachi	HD74LS86	
	Motorola	**SN74LS86**	**1123**
	National	DM74LS86	
	SGS	T74LS86	
	Signetics	**74LS86**	**1156**
	TI	SN74LS86A	
DN74LS90	**Fairchild**	**74LS90**	**5311**
	Motorola	**SN74LS90**	**1127**
	National	DM74LS90	
	SGS	T74LS90	
	Signetics	**74LS90**	**1156**
	TI	SN74LS90	
DN74LS92	**Fairchild**	**74LS92**	**5311**
	Hitachi	HD74LS92	
	Motorola	**SN74LS92**	**1127**
	National	DM74LS92	
	SGS	T74LS92	
	Signetics	**74LS92**	**1156**
	TI	SN74LS92	
DN74LS93	**Fairchild**	**74LS93**	**5311**
	Hitachi	HD74LS93	
	Motorola	**SN74LS93**	**1127**

(Continued)

◆ Discontinued

The manufacturers report their devices can be used as direct replacements.
Performance details often differ, so compare the specifications considering your requirements.

Panasonic (Cont'd)

Manufacturer Device	Replacement Source	Device	IC Master Page
DN74LS93	National	DM74LS93	
	SGS	T74LS93	
	Signetics	**74LS93**	1156
	TI	SN74LS93	
DN74LS95B	**Fairchild**	**74LS95B**	5311
	Hitachi	HD74LS95B	
	Motorola	**SN74LS95B**	1128
	National	DM74LS95B	
	SGS	T74LS95	
		T74LS95B	
	Signetics	**74LS95B**	1156
	TI	SN74LS95B	
MM41256	AMD	MCM6256	
	AT&T	WCM41256	
	Fujitsu	MB81256	
	Hitachi	HM50256	
		HM50257	
	MicronTech	MT1256	
	Mitsubishi	M5M4256	
		MSM4257	
	Motorola	MCM6256	
		MCM6257	
	NEC	MPD41257	
		μPD41256	
	OKI	M5M37256	
		MSM37256	
		MSM41256	
	TI	TMS4257	
	Toshiba	TMM41256	
	Samsung	KM1256	
MN1001	National	MM5280	
MN2102	Fairchild	2102H	
	National	MM2102A	
MN23256	AMD	AM92256	
	Fujitsu	MB83256	
	GI	R09256	
	GouldAMI	S23256	
		S38256	
	GTEMicro	G53256	
	Hitachi	HN613256	
	Mitsubishi	M5M23256	
	Mostek	MK38000	
	Motorola	MCM63256	
		MCM65256	
	NCR	NCR23256	
		NCR23257	
	NEC	UPD23256	
		UPD23256A	
		UPD23C256E	
	OKI	**MSM38256**	4733
	Panasonic	MN23257	
	RCA	CDM52356	
		CDM53256	1673,1678
	S-MOS	**SMM2326**	4178
		SMM6325	4178
		SMM6326	4178
	Signetics	23256	
		23256A	
	SSS	SCM23C256	
	Supertex	CM2560	
	Toshiba	**TMM23256**	4263
	UMC	UM23256	
	VTI	23257	
		VT23256	
		VT23257	
MN23257	AMD	AM92256	
	Fujitsu	MB83256	
	GI	R09256	
	GouldAMI	S23256	
		S38256	
	GTEMicro	G53256	
	Hitachi	HN613256	
	Mitsubishi	M5M23256	
	Mostek	MK38000	
	Motorola	MCM63256	
		MCM65256	
	NCR	NCR23256	
		NCR23257	
	NEC	UPD23256	
		UPD23256A	
		UPD23C256E	
	OKI	**MSM38256**	4733
	Panasonic	MN23256	
	RCA	CDM52356	
		CDM53256	1673,1678
	S-MOS	**SMM2326**	4178
		SMM6325	4178
		SMM6326	4178
MN23257	Signetics	23256	
		23256A	
	SSS	SCM23C256	
	Supertex	CM2560	
	Toshiba	**TMM23256**	4263
	UMC	UM23256	
	VTI	23257	
		VT23256	
		VT23257	
MN2332	AMD	AM9232	
	CSG	MPS2332	
	Fairchild	F3532	
	GI	R03-9332	
	GouldAMI	S2333	
		S68A332	
	GTEMicro	G2332	
	Hitachi	HN46332	
	Intech	IM7332	
	Intel	2332	
	Mitsubishi	M58333	
	Motorola	**MCM68A332**	4120
	National	NM52132	
	NCR	NCR2332	
	NEC	UPD2332A	
	RCA	**CDM5333**	1673,1677
	Rockwell	R2332	
	SGS	M2332	
	Sharp	LH2332	
	Siemens	SA88332	
		SAB8332	
	Signetics	2332	
		2632A	
	SiliconG	SG3532	
	SSS	SCM23C32	
	SMC	ROM4732	
	Supertex	23SC32	
		CM3200	
	Synertek	SY2332	
	TI	TM2332	
		TMS2332	
		TMS4732	
	Toshiba	TMM2332	
		TMM333P	
	VTI	VT2332	
MN2364	AMD	AM9265	
	Fairchild	F3568	
		F3569	
		F3570	
	GI	R03-9365	
		R09864	
	GouldAMI	S2364	
		S6364	
	GTEMicro	G5364	
	Hitachi	HN61364	
	Intel	2364A	
	Mitsubishi	M5M2364	
		M5M2365	
		M5M23C64	
	Mostek	MK37000	
	Motorola	MCM68369	
		MCM68370	
	National	MM52264	
		NM52264	
	OKI	**MSM3864**	4733
	Panasonic	MN4864	
	RCA	**CDM5365**	1673,1677
	Rockwell	R2364B	
	SSS	SCM23C65	
	Supertex	23SC64	
		23SC64/A	
		CM6400	
	Synertek	SY2365/A	
	TI	TMS2364	
		TMS4764	
	Toshiba	TMM2365	
	UMC	UM2366	
	VTI	VT2365	
◆MN2716	Hitachi	HN462716	
	National	MM2716	
	OKI	MSM2716	
	SGS	M2716	
	ThomsonCSF	ET2716	
MN4864	AMD	AM9265	
	Fairchild	F3568	
		F3569	
		F3570	
	GI	R03-9365	
		R09864	
	GouldAMI	S2364	
		S6364	
MN4864	GTEMicro	G5364	
	Hitachi	HN61364	
	Intel	2364A	
	Mitsubishi	M5M2364	
		M5M2365	
		M5M23C64	
	Mostek	MK37000	
	Motorola	MCM68369	
		MCM68370	
	National	MM52264	
		NM52264	
	OKI	**MSM3864**	4733
	Panasonic	MN2364	
	RCA	**CDM5365**	1673,1677
	Rockwell	R2364B	
	SSS	SCM23C65	
	Supertex	23SC64	
		23SC64/A	
		CM6400	
	Synertek	SY2365/A	
	TI	TMS2364	
		TMS4764	
	Toshiba	TMM2365	
	UMC	UM2366	
	VTI	VT2365	
MN74HC4067	**RCA**	**CD74HC4067**	1150
	Signetics	**74HC4067**	1160
MN74HC4075	AMD	AM2167	
	Cypress	CY7C167	
	Inmos	IMS1400	
	Motorola	**MC74HC4075**	1122
	RCA	**CD74HC4075**	1149
	SGS	M74HC4075	
	Signetics	PC74HC4075	
	Toshiba	**TC74HC4075**	1363
	Universal	US74HC4075	
MNS101	GouldAMI	S5101	
		S6501	
	Harris	MH6501	
	Hitachi	HM435101	
	Intel	5101	
	Motorola	MCM5101	
		MCMS1L01	
	National	MM74C920	
	RCA	**MWS5101**	1673,1676
	Sharp	LH5101	
	SSS	SCM5101	
	Synertek	SY2101	
	Toshiba	TC5501	
◆OM200	**Signetics**	**OM200**	3729

Philips

Manufacturer Device	Replacement Source	Device	IC Master Page
◆TAA560	Cherry	CS560	

Plessey Solid State

Manufacturer Device	Replacement Source	Device	IC Master Page
MB8860	GTEMicro	G8860	
	Mitel	MT8860	
MJ2813	AMD	AM2813	
MJ2841	AMD	AM2841	
	Fairchild	3341A	
MP3812	AMD	AM2812	
MV3506	**GouldAMI**	**S3506**	3590
MV3507	**GouldAMI**	**S3507**	3590
MV5089	RIFA	MK5089	
MV74HCT137	Supertex	74HCT137	
MV74HCT138	CTI	74HCT138	
	IDT	IDT74HCT138	
	Mitel	MD74HCT138	
	Motorola	MC74HCT138	
	Nitron	NC74HCT138	
	RCA	**CD74HCT138**	1150
	SPI	SP74HCT138	
	SGS	M74HCT138	
	Signetics	**74HCT138**	1157
	SSS	SS74HCT138	
	TI	SN74HCT138	
	Toshiba	**TC74HCT138**	1363
	Zytrex	ZX74HCT138-2	
MV74HCT139	IDT	IDT74HCT139	
	Mitel	MD74HCT139	
	Nitron	NC74HCT139	
	SPI	SP74HCT139	
	Signetics	**74HCT139**	1157
	Universal	US74HCT139	
	Zytrex	ZX74HCT139-2	
MV74HCT237	Supertex	74HCT237	
	Universal	US74HCT237	
MV74HCT238	CTI	74HCT238	
	RCA	**CD74HCT238**	1150
	Signetics	**74HCT238**	1157
	SSS	SS74HCT238	
	TI	SN74HCT238	
MV74HCT239	Zytrex	ZX74HCT239	
MV74HCT240	CTI	74HCT240	
	Hitachi	HD74HCT240	
	Micrel	MIC74HCT240	
	MicroTech	74HCTR240	
	Mitel	MD74HCT240	
	Motorola	MC74HCT240	
	National	MM74HCT240	
	Nitron	NC74HCT240	
	RCA	**CD74HCT240**	1149
	SPI	SP74HCT240	
	SGS	M74HCT240	
	Signetics	**74HCT240**	1157
	SSS	SS74HCT240	
	Supertex	SI74HCT240	
	TI	SN74HCT240	
	Toshiba	**TC74HCT240**	1363
	Universal	US74HCT240	
	Zytrex	ZX74HCT240-2	
MV74HCT241	CTI	74HCT241	
	Hitachi	HD74HCT241	
	Micrel	MIC74HCT241	
	MicroTech	74HCTR241	
	Mitel	MD74HCT241	
	Motorola	MC74HCT241	
	National	MM74HCT241	
	Nitron	NC74HCT241	
	RCA	**CD74HCT241**	1149
	SPI	SP74HCT241	
	SGS	M74HCT241	
	Signetics	**74HCT241**	1157
	SSS	SS74HCT241	
	Supertex	SI74HCT241	
	TI	SN74HCT241	
	Toshiba	**TC74HCT241**	1363
	Universal	US74HCT241	
	Zytrex	ZX74HCT241-2	
MV74HCT244	CTI	74HCT244	
	Hitachi	HD74HCT244	
	Micrel	MIC74HCT244	
	MicroTech	74HCTR244	
	Mitel	MD74HCT244	
	Motorola	MC74HCT244	
	National	MM74HCT244	
	Nitron	NC74HCT244	
	RCA	**CD74HCT244**	1149
	SPI	SP74HCT244	
	SGS	M74HCT244	
	Signetics	**74HCT244**	1158
	SSS	SS74HCT244	
	Supertex	SI74HCT244	
	TI	SN74HCT244	
	Toshiba	**TC74HCT244**	1363
	Universal	US74HCT244	
	Zytrex	ZX74HCT244-2	
MV74HCT245	CTI	74HCT245	
	GTEMicro	G74SC245	
	Hitachi	HD74HCT245	
	Micrel	MIC74HCT245	
	MicroTech	74HCTR245	
	Mitel	MD74HCT245	
	Motorola	MC74HCT245	
	National	MM74HCT245	
	Plessey	MV74SC245	
	RCA	**CD74HCT245**	1149
	SPI	SP74HCT245	
	SGS	M74HCT245	
	Signetics	**74HCT245**	1158
	SSS	SS74HCT245	
	TI	SN74HCT245	
	Toshiba	**TC74HCT245**	1363
	Universal	US74HCT245	
MV74HCT373	CTI	74HCT373	
	GTEMicro	G74SC373	
	Hitachi	HD74HCT373	
	Micrel	MIC74HCT373	
	MicroTech	74HCTR373	
	Mitel	MD74HCT373	
	Motorola	MC74HCT373	
	National	MM74HCT373	
	Nitron	NC74HCT373	
	Plessey	MV74SC373	
	RCA	**CD74HCT373**	1150
	SPI	SP74HCT373	
	SGS	M74HCT373	
	Signetics	**74HCT373**	1158
	SSS	SS74HCT373	

(Continued)

◆ Discontinued

Bold face device numbers indicate manufacturers data is provided in the IC Master on the pages noted.

Plessey Solid State (Cont'd)

Manufacturer Device	Replacement Source	Device	IC Master Page
MV74HCT373	Supertex	SI74HCT373	
	TI	SN74HCT373	
	Toshiba	**TC74HCT373**	**1363**
	Universal	US74HCT373	
	Zytrex	ZX74HCT373-2	
MV74HCT374	CTI	74HCT374	
	GTEMicro	G74SC374	
	Hitachi	HD74HCT374	
	Micrel	MIC74HCT374	
	MicroTech	74HCTR374	
	Mitel	MD74HCT374	
	Motorola	MC74HCT374	
	National	MM74HCT374	
	Nitron	NC74HCT374	
	Plessey	MV74SC374	
	RCA	CD74HCT374	
	SPI	SP74HCT374	
	SGS	M74HCT374	
	Signetics	**74HCT374**	**1158**
	SSS	SS74HCT374	
	Supertex	SI74HCT374	
	TI	SN74HCT374	
	Toshiba	**TC74HCT374**	**1363**
	Universal	US74HCT374	
	Zytrex	ZX74HCT374-2	
MV74HCT533	CTI	74HCT533	
	Hitachi	HD74HCT533	
	Micrel	MIC74HCT533	
	MicroTech	74HCTR533	
	Motorola	MC74HCT533	
	RCA	**CD74HCT533**	**1150**
	Signetics	**74HCT533**	**1159**
	SSS	SS74HCT533	
	TI	SN74HCT533	
	Universal	US74HCT533	
	Zytrex	ZX74HCT533	
MV74HCT534	CTI	74HCT534	
	Hitachi	HD74HCT534	
	Micrel	MIC74HCT534	
	MicroTech	74HCTR534	
	Motorola	MC74HCT534	
	RCA	CD74HCT534	
	Signetics	**74HCT534**	**1159**
	SSS	SS74HCT534	
	TI	SN74HCT534	
	Universal	US74HCT534	
	Zytrex	ZX74HCT534-2	
MV74HCT540	CTI	74HCT540	
	Hitachi	HD74HCT540	
	Micrel	MIC74HCT540	
	MicroTech	74HCTR540	
	Mitel	MD74HCT540	
	Motorola	MC74HCT540	
	RCA	**CD74HCT540**	**1149**
	SPI	SP74HCT540	
	SGS	M74HCT540	
	Signetics	**74HCT540**	**1159**
	SSS	SS74HCT540	
	TI	SN74HCT540	
	Toshiba	**TC74HCT540**	**1363**
	Universal	US74HCT540	
	Zytrex	ZX74HCT540-2	
MV74HCT541	CTI	74HCT541	
	Hitachi	HD74HCT541	
	Micrel	MIC74HCT541	
	MicroTech	74HCTR541	
	Mitel	MD74HCT541	
	Motorola	MC74HCT541	
	RCA	**CD74HCT541**	**1149**
	SPI	SP74HCT541	
	SGS	M74HCT541	
	Signetics	**74HCT541**	**1159**
	SSS	SS74HCT541	
	TI	SN74HCT541	
	Toshiba	**TC74HCT541**	**1363**
	Universal	US74HCT541	
	Zytrex	ZX74HCT541-2	
MV74HCT563	CTI	74HCT563	
	Hitachi	HD74HCT563	
	Micrel	MIC74HCT563	
	MicroTech	74HCTR563	
	Motorola	MC74HCT563	
	RCA	**CD74HCT563**	**1150**
	SGS	M74HCT563	
	Signetics	**74HCT563**	**1159**
	SSS	SS74HCT563	
	TI	SN74HCT563	
	Toshiba	**TC74HCT563**	**1363**
	Universal	US74HCT563	
MV74HCT564	CTI	74HCT564	
	Hitachi	HD74HCT564	
	Micrel	MIC74HCT564	
	MicroTech	74HCTR564	
	Motorola	MC74HCT564	
	Plessey	MV74HCT573	
	RCA	CD74HCT564	
	SGS	M74HCT564	
	Signetics	**74HCT564**	**1159**
	SSS	SS74HCT564	
	TI	SN74HCT564	
	Toshiba	**TC74HCT564**	**1363**
	Universal	US74HCT564	
MV74HCT573	CTI	74HCT564	
	Hitachi	HD74HCT564	
	Micrel	MIC74HCT564	
	MicroTech	74HCTR564	
	Motorola	MC74HCT564	
	Plessey	MV74HCT564	
	RCA	CD74HCT564	
	SGS	M74HCT564	
	Signetics	**74HCT564**	**1159**
	SSS	SS74HCT564	
	TI	SN74HCT564	
	Toshiba	**TC74HCT564**	**1363**
	Universal	US74HCT564	
MV74HCT574	CTI	74HCT574	
	Hitachi	HD74HCT574	
	MicroTech	74HCTR574	
	Mitel	MD74HCT574	
	Motorola	MC74HCT574	
	RCA	CD74HCT574	
	SPI	SP74HCT574	
	SGS	M74HCT574	
	Signetics	**74HCT574**	**1159**
	SSS	SS74HCT574	
	TI	SN74HCT574	
	Toshiba	**TC74HCT574**	**1363**
	Universal	US74HCT574	
		US75HCT574	
MV74SC245	CTI	74HCT245	
	GTEMicro	G74SC245	
	Hitachi	HD74HCT245	
	Micrel	MIC74HCT245	
	MicroTech	74HCTR245	
	Mitel	MD74HCT245	
	Motorola	MC74HCT245	
	National	MM74HCT245	
	Plessey	MV74HCT245	
	RCA	**CD74HCT245**	**1149**
	SPI	SP74HCT245	
	SGS	M74HCT245	
	Signetics	**74HCT245**	**1158**
	SSS	SS74HCT245	
	TI	SN74HCT245	
	Toshiba	**TC74HCT245**	**1363**
	Universal	US74HCT245	
MV74SC373	CTI	74HCT373	
	GTEMicro	G74SC373	
	Hitachi	HD74HCT373	
	Micrel	MIC74HCT373	
	MicroTech	74HCTR373	
	Mitel	MD74HCT373	
	Motorola	MC74HCT373	
	National	MM74HCT373	
	Nitron	NC74HCT373	
	Plessey	MV74HCT373	
	RCA	**CD74HCT373**	**1150**
	SPI	SP74HCT373	
	SGS	M74HCT373	
	Signetics	**74HCT373**	**1158**
	SSS	SS74HCT373	
	Supertex	SI74HCT373	
	TI	SN74HCT373	
	Toshiba	**TC74HCT373**	**1363**
	Universal	US74HCT373	
	Zytrex	ZX74HCT373-2	
MV74SC374	CTI	74HCT374	
	GTEMicro	G74SC374	
	Hitachi	HD74HCT374	
	Micrel	MIC74HCT374	
	MicroTech	74HCTR374	
	Mitel	MD74HCT374	
	Motorola	MC74HCT374	
	National	MM74HCT374	
	Nitron	NC74HCT374	
	Plessey	MV74HCT374	
	RCA	CD74HCT374	
	SPI	SP74HCT374	
	SGS	M74HCT374	
	Signetics	**74HCT374**	**1158**
	SSS	SS74HCT374	
MV74SC374	Supertex	SI74HCT374	
	TI	SN74HCT374	
	Toshiba	**TC74HCT374**	**1363**
	Universal	US74HCT374	
	Zytrex	ZX74HCT374-2	
MV8204	Cherry	CS8204	
	Mitel	ML8204	
	Samsung	ML8204	
MV8804	Fairchild	F8804	
	Mitel	MT8804	
MV8865	Mitel	MT8865	
	Mostek	MK8865	
MV8870	**GTEMicro**	**G8870**	**3594**
	Mitel	MT8870	
MV8912	GTEMicro	G8912B	
	Harris	**HC5512**	**3596**
	Intel	2912	
		ID2912	
	National	TP3040	
	SGS	M5912	
	TI	TCM2912B	
MV8960	Mitel	MT8960	
MV8961	Mitel	MT8961	
MV8962	Mitel	MT8962	
MV8963	Mitel	MT8963	
MV8964	GouldAMI	S8964	
	Mitel	MT8964	
MV8965	GouldAMI	S8965	
	Mitel	MT8965	
PIC1650A	GI	PIC1650A	
PIC1654	GI	PIC1654	
PIC1655A	GI	PIC1655A	
PIC1656	GI	PIC1656	
PIC1670	GI	PIC1670	
◆SL1310	Exar	XR1310	
	National	LM1310	
	TI	SN76115	
	Toshiba	TA7157	
◆SL1495	Motorola	MC1495	
	SiliconG	SG1495	
SL1496	Fairchild	μA796	
	Motorola	MC1496	
	National	LM1496	
	Signetics	**MC1496**	**3722**
	SiliconG	SG1496	
◆SL1595	Motorola	MC1595	
	SiliconG	SG1595	
SL2364C	AMD	AM9264	
	GouldAMI	S2364	
		S68A364	
	Hitachi	HN48364	
	Motorola	**MCM68364**	**4120**
	NCR	NCR2364	
	OKI	**MSM3864**	**4733**
	S-MOS	**SMM2364**	**4178**
	Sharp	LH2364A	
	Signetics	2364	
	Synertek	SYM2364	
	TI	TMS2364	
		TMS4764	
	Toshiba	TMM2364	
	VTI	VT2364	
	Weitek	SC8164	
SL3046	Fairchild	UA3046	
	Motorola	**MC3346**	**3614**
	National	LM3046	
	Plessey	SL3146	
	RCA	**CA3046**	**3678**
		CA3146	**3678**
	Sanyo	LA3046	
	SGS	CA3046	
		TBA331	
	SiliconG	SG3046	
		SG3146	
		SG3821	
	Sprague	ULN-2046	
	ThomsonCSF	SFC	
◆SL3054	Fairchild	UA3054	
	Motorola	**CA3054**	**3614**
	National	LM3054	
	RCA	**CA3054**	**3678**
	Sprague	ULN-2054	
	ThomsonCSF	SFC2054	
◆SL3081	**RCA**	**CA3081**	**3678**
	Sprague	ULN-2081	
◆SL3082	**RCA**	**CA3082**	**3678**
	Sprague	ULN-2082	
◆SL3083	**RCA**	**CA3083**	**3678**
		CA3183	**3678**
	SiliconG	SG3083	
		SG3183	
	Sprague	ULN-2083	
SL3086	Fairchild	UA3086	
	Motorola	**MC3386**	**3614**
	National	LM3086	
	RCA	**CA3086**	**3678**
	Sanyo	LA3086	
	SiliconG	SG3086	
		SG3886	
	Sprague	ULN-2086	
	ThomsonCSF	SFC2086	
SL3127	**RCA**	**CA3127**	**3678**
SL3146	Fairchild	UA3046	
	Motorola	**MC3346**	**3614**
	National	LM3046	
	Plessey	SL3046	
	RCA	**CA3046**	**3678**
		CA3146	**3678**
	Sanyo	LA3046	
	SGS	CA3046	
		TBA331	
	SiliconG	SG3046	
		SG3146	
		SG3821	
	Sprague	ULN-2046	
	ThomsonCSF	SFC	
◆SL3183	**RCA**	**CA3083**	**3678**
		CA3183	**3678**
	SiliconG	SG3083	
		SG3183	
	Sprague	ULN-2083	
SL562	MicroPwr	MPOP02	
	National	LM741	
	PMI	**OP-02**	**3636**
	SGS	LM741	
		LS141	
	ThomsonCSF	μA741	
	Samsung	LM741	
SP1648	**Motorola**	**MC1648**	**1131**
SP1650	Motorola	MC1650	
SP1651	Motorola	MC1651	
SP1658	**Motorola**	**MC1658**	**1131**
SP1660	**Motorola**	**MC1660**	**1123**
SP1662	**Motorola**	**MC1662**	**1122**
SP1664	**Motorola**	**MC1664**	**1122**
SP1666	**Motorola**	**MC1666**	**1127**
SP1668	**Motorola**	**MC1668**	**1127**
SP1670	Fairchild	11C70	
	Motorola	**MC1670**	**1127**
SP1672	**Motorola**	**MC1672**	**1123**
SP1674	**Motorola**	**MC1674**	**1123**
◆SP1690	Fairchild	11C06	
	Motorola	**MC1690**	**1127**
SP1692	**Motorola**	**MC1692**	**1131**
SP4551	Siemens	SDA4041	
SP8610	Fairchild	11C05	
	Motorola	**MC1699**	**1128**
	Plessey	SP8616	
SP8611	RCA	CA3199	
SP8616	Fairchild	11C05	
	Motorola	**MC1699**	**1128**
	Plessey	SP8610	
SP8629	National	MM8629	
SP8640	Plessey	SP8647	
SP8647	Plessey	SP8640	
SP8656	National	DS8627	
SP8658	National	DS8628	
SP8680	Fairchild	11C90	
	Plessey	SP8685	
SP8685	Fairchild	11C90	
	Plessey	SP8680	
SP8740	Fairchild	11C91	
SP8793	National	DS8616	
TAB1042	Exar	XR4202	
◆TBA120	National	TBA120	
	Siemens	TBA120	
	Telefunken	TBA120	
TBA440	Siemens	TBA440	
TBA530	Telefunken	TBA530	
TBA540	Telefunken	TBA540	
TBA560	Telefunken	TBA560	
TBA750	Signetics	TBA750	
TBA800	Fairchild	TBA800	
	SGS	TBA800	
	Telefunken	TDA800	
	ThomsonCSF	TBA800	
TBA920	ThomsonCSF	TBA920	
TDA1085	Motorola	TDA1085	
TDA1085A	Motorola	TDA1085A	
TDA2522	National	TDA2522	
	Siemens	TDA2522	
TDA2523	National	TDA2523	
TDA2530	Hitachi	HN462532	
	National	MM2532	

(Continued)

◆ Discontinued

The manufacturers report their devices can be used as direct replacements.
Performance details often differ, so compare the specifications considering your requirements.

Plessey Solid State (Cont'd)

Manufacturer Device	Replacement Source	Device	IC Master Page
TDA2530	National	NMC2532	
		TDA2530	
		TDA2532	
	Siemens	TDA2530	
	SiliconG	SG2532	
TDA2540	**Signetics**	**TDA2540**	**3731**
	ThomsonCSF	TBA2540	
TDA2541	**Signetics**	**TDA2541**	**3717,3731**
	ThomsonCSF	TDA2541	
TDA2560	National	TDA2560	
	Siemens	TDA2560	
◆TDA2591	National	TDA2591	
	Telefunken	TDA2591	
TDA2593	National	TDA2593	
	Signetics	**TDA2593**	**3731**
	Telefunken	TDA2593	
	ThomsonCSF	TDA2593	
TDA3717	RIFA	TBL3717	
TDA440	National	TDA440	
	SGS	TDA440	

Polycore Electronics

Manufacturer Device	Replacement Source	Device	IC Master Page
PL293	**IPS**	**IP293**	**3599**
	SGS	L293	

Precision Monolithics Inc.

Manufacturer Device	Replacement Source	Device	IC Master Page
OP11	MicroPwr	MPOP11	
	Motorola	MC471CP	
OP27	AD	AD510	
		AD517	
	Burr-Brown	OPA27	
	Harris	HAOP27	
	LinearTech	OP27	
		LT1007	
	Raytheon	OP27	
		RC714	**3666**
OP37	Burr-Brown	OPA37	
	Harris	HAOP37	
	LinearTech	OP37	
		LT1037	
	Raytheon	OP37	
OP41	AD	AD547	
	Burr-Brown	OPA1100	
	Harris	HA5170	
	National	LH0052	
CMP-05	Fairchild	μA760	
	National	LM160	
DAC-01	MicroPwr	DAC-01	
		MP5520	
DAC-01C	NEC	μPC603	
DAC-02C	NEC	μPC610	
DAC-08	AMD	AM1408	
		DAC-08	
		SSS1408	
	AD	AD1408	
		ADDAC-08	
	Datel	DAC-08B	
		DAC-I8BC	
		DAC-IC8B	
		DAC-IC8BC	**3162**
	Fairchild	DAC-08	
		MA0802M	
		μA0801	
		μA0802	
	Hitachi	HA17408	
	Motorola	**DAC-08**	**3630**
		MC1408	
	National	DAC0801	
		DAC0802	
		DAC0806	
		DAC0807	
		DAC0808	
	NEC	μPC624	
	PMI	DAC-1408	
	Raytheon	**DAC-08**	**3664**
	Signetics	MC1408	
DAC-10	**Datel**	**DAC-IC10B**	**3162**
	Raytheon	DAC-10	
DAC-1408	AMD	AM1408	
		DAC-08	
		SSS1408	
	AD	AD1408	
		ADDAC-08	
	Datel	DAC-08B	
		DAC-I8BC	
		DAC-IC8B	
		DAC-IC8BC	**3162**

(Continued)

Manufacturer Device	Replacement Source	Device	IC Master Page
DAC-1408	Fairchild	DAC-08	
		MA0802M	
		μA0801	
		μA0802	
	Hitachi	HA17408	
	Motorola	**DAC-08**	**3630**
		MC1408	
	National	DAC0801	
		DAC0802	
		DAC0806	
		DAC0807	
		DAC0808	
	NEC	μPC624	
	PMI	**DAC-08**	**3637,3639**
	Raytheon	**DAC-08**	**3664**
	Signetics	MC1408	
DAC-1508	AD	AD1508	
	Datel	DAC-IC8BM	
	Motorola	MC1508	
	National	MC1508	
	Signetics	MC1508	
		SE5008	
		SE5009	
◆DAC-76	AMD	AM6070	
◆DAC-78	AMD	AM6070	
◆DAC-86	AMD	AM6072	
◆DAC-87	AMD	AM6073	
DMX-88	AD	AD7501	
	Burr-Brown	**MPC8S**	**3149**
	Datel	MUX808	
		MX-808	**3163**
	Harris	HI508	
	Intersil	IH6108	
	MicroPwr	MP7501	
		MP7508	
	National	LF11508	
		LF13508	
	PMI	MUX-08	
		MUX-88	
	Siliconix	DG508A	
	TeledyneP	4554	
LM13600	Exar	XR13600	
	National	LM13600	
MAT-01	**MicroPwr**	**MPT-01A**	**3605**
MAT-01GH	MicroPwr	MPT-01GH	
MAT-02	**MicroPwr**	**MPT-02A**	**3605**
	National	LM194	
MAT-02EH	MicroPwr	MPT-02EH	
MAT-02FH	MicroPwr	MPT-02FH	
MP2108	Intersil	LH2108	
	LinearTech	LH2108	
	National	LH2108	
	PMI	PM2108	
MPT-02BH	MicroPwr	MPT-02BH	
MUX-08	AD	AD7501	
	Burr-Brown	**MPC8S**	**3149**
	Datel	MUX808	
		MX-808	**3163**
	Harris	HI508	
	Intersil	IH6108	
	MicroPwr	MP7501	
		MP7508	
	National	LF11508	
		LF13508	
	PMI	DMX-88	
		MUX-88	
	Siliconix	DG508A	
	TeledyneP	4554	
MUX-16	**Burr-Brown**	**MPC16S**	**3149**
	Datel	**MV-1606**	**3163**
		MX-1606	**3163**
	Harris	HI506	
	Intersil	IH6116	
	MicroPwr	MP7506	
	Siliconix	DG506A	
MUX-24	**Burr-Brown**	**MPC4D**	**3149**
	Harris	HI509	
	Intersil	IH6208	
	MicroPwr	MP7509	
		MP7509DI	
	National	LF11509	
		LF13509	
	Siliconix	DG509A	
	TeledyneP	4553	
MUX-28	AD	AD7507	
	Burr-Brown	**MPC8D**	**3149**
	Datel	**MVD-807**	**3163**
		MXD-807	**3163**
	Harris	HI507	
	Intersil	IH6216	
	MicroPwr	MP7507	

(Continued)

Manufacturer Device	Replacement Source	Device	IC Master Page
MUX-28	Siliconix	DG507A	
	TeledyneP	4551	
MUX-88	AD	AD7501	
	Burr-Brown	**MPC8S**	**3149**
	Datel	MUX808	
		MX-808	**3163**
	Harris	HI508	
	Intersil	IH6108	
	MicroPwr	MP7501	
		MP7508	
	National	LF11508	
		LF13508	
	PMI	DMX-88	
		MUX-08	
	Siliconix	DG508A	
	TeledyneP	4554	
OP-02	MicroPwr	MPOP02	
◆OP-03	**MicroPwr**	**MPOP-03**	**688,3607**
OP-08	AD	AD517	
	LinearTech	LT1008	
	MicroPwr	MPOP08	
OP-10	LinearTech	LT1002	
	MicroPwr	MPOP10	
OP-12	LinearTech	LT1012	
	MicroPwr	MPOP-12	
	TI	OP-12	
OP-15	AD	AD381	
		AD544	
	Burr-Brown	OPA606	
	LinearTech	LF155	
		LT1022	
		LT1055	
		LT1056	
		OP-15	
	National		
		LF155	
	ThomsonCSF	LF155	
OP-207	LinearTech	LT1002	
	MicroPwr	MP207	
		MPOP-207	
OP-227	LinearTech	OP-227	
	MicroPwr	MPOP-227	
◆OP-24	Motorola	OP-24G	
OP05	AD	AD510	
	LinearTech	OP05	
	MicroPwr	MPOP05	
OP06	AMD	SSS725	
	Fairchild	μA725	
	National	LM725	
	Raytheon	RM725	
OP07	AD	AD517	
		OP-07	
	Fairchild	UA714	
	Harris	HA-OP07	
		HA5130	
		HA5135	
	LinearTech	OP-07	
	Micra	MC0021	
	MicroPwr	MPOP07	
	NEC	UPC264	
	Raytheon	OP07	
	TI	OP07D	
OP09	Fairchild	UA4136	
	MicroPwr	MPOP09	
	RCA	RC4136	
OP11	LinearTech	LT1014	
	MicroPwr	OP11	
	National	LM148	
	Raytheon	LM148	
		RM4156	
		RM4158	
	TI	**LM148**	**719**
OP14	Fairchild	UA1458HC	
	Harris	CM1458	
		HA5102	
	MicroPwr	MPOP14	
	Motorola	**MC1458**	**3617**
	National	LF412	
	NEC	MPC251	
	RCA	**CA1458**	**3672**
	SGS	MC1458	
	Signetics	**SA1458**	**3729**
	ThomsonCSF	μA1458	
	Samsung	**MC1458**	**3679**
		MC4558	**3679**
OP20	Harris	HA-2720	
	Intersil	ICL7611	
		ICL8021	
		LM4250	
	Maxim	ICL7611	
	Motorola	**MC1776**	**3616**
	National	LF441	

(Continued)

Manufacturer Device	Replacement Source	Device	IC Master Page
OP20	National	LM4250	
	PMI	OP21	
		OP22	
	SGS	MC1776	
	Solitron	UC4250	
	TI	TLC251	
		TLC271	
	ThomsonCSF	μA776	
OP21	Harris	HA-2720	
	Intersil	ICL7611	
		ICL8021	
		LM4250	
	Maxim	ICL7611	
	Motorola	**MC1776**	**3616**
	National	LF441	
		LM4250	
	PMI	OP20	
		OP22	
	SGS	MC1776	
	Solitron	UC4250	
	TI	TLC251	
		TLC271	
	ThomsonCSF	μA776	
OP22	Harris	HA-2720	
	Intersil	ICL7611	
		ICL8021	
		LM4250	
	Maxim	ICL7611	
	Motorola	**MC1776**	**3616**
	National	LF441	
		LM4250	
	PMI	OP20	
		OP21	
	SGS	MC1776	
	Solitron	UC4250	
	TI	TLC251	
		TLC271	
	ThomsonCSF	μA776	
OP220	Intersil	ICL7621	
	Maxim	ICL7621	
	PMI	OP221	
	TI	TLC252	
		TLC272	
OP221	Intersil	ICL7621	
	Maxim	ICL7621	
	PMI	OP220	
	TI	TLC252	
		TLC272	
OP27	Burr-Brown	OP27	
	LinearTech	OP27	
	MicroPwr	MP027	
	Raytheon	OP-27	
OP37	Burr-Brown	OP37	
	LinearTech	OP37	
	MicroPwr	MPOP37	
	Raytheon	OP-37	
PM108	AD	AD108	
	Fairchild	μA108	
	Harris	LM108	
	Intersil	**LM108**	**3600,3601**
	LinearTech	LM108	
	MicroPwr	**MP108**	**688,3607**
	Motorola	**LM108**	**3615**
	National	LM108	
	SGS	M108	
	SiliconSys	**SSI108**	**3736**
	TI	LM108	
PM108A	AMD	LM108A	
	AD	AD108A	
	Fairchild	UA108A	
	Harris	LM108A	
	LinearTech	LM108A	
	MicroPwr	**MP108A**	**688,3607**
	Motorola	**LM108A**	**3615**
PM139	Fairchild	μA139	
	Motorola	**LM139**	**3631**
	National	LM139	
	PMI	CMP-04	
	Raytheon	LM139	
	RCA	**CA139**	**3672,3677**
	Signetics	LM139	
	TI	**LM139**	**719**
PM139A	AMD	LM139A	
	Motorola	**LM139A**	**3631**
	National	LM139A	
	PMI	CMP-04	
	RCA	**CA139A**	**3672,3677**
	TI	**LM139A**	**719**
PM155A	LinearTech	LF155A	
	National	LF155A	
PM156A	AMD	LF156A	
	AD	AD544	

(Continued)

◆ Discontinued

Bold face device numbers indicate manufacturers data is provided in the IC Master on the pages noted.

ALTERNATE SOURCE DIRECTORY

Precision Monolithics Inc. (Cont'd)

Manufacturer Device	Replacement Source	Device	IC Master Page
PM156A	**Burr-Brown**	**OPA156A**	**3149,3150**
	Fairchild	LF156A	
	LinearTech	LF156A	
	National	LF156A	
	TI	**TL081**	**718**
PM157A	AMD	27S29	
		LF157A	
	Fairchild	LF157A	
	Harris	7649	
	MMI	5349-1	
		6349-1	
	National	545472	
		74S472	
		LF157A	
	Raytheon	**29621**	**4134**
	Signetics	825147	
	TI	28S42	
PM208A	AMD	LM208A	
	AD	AD208A	
	Fairchild	UA208A	
	MicroPwr	**MP208A**	**3607**
	Motorola	**LM208A**	**3615**
	National	LM208A	
	PMI	PM308A	
PM2108	Intersil	LH2108	
	LinearTech	LH2108	
	National	LH2108	
	PMI	MP2108	
PM2108A	**Intersil**	**LH2108A**	**3600,3601**
	National	LH2108A	
◆PM2208	National	LH2208	
◆PM2208A	Intersil	LH2208A	
	MicroPwr	**MP2208A**	**3607**
	National	LH2208A	
◆PM2308	Intersil	LH2308	
	National	LH2308	
◆PM2308A	**Intersil**	**LH2308A**	**3600,3601**
	National	LH2308A	
PM239	Fairchild	UA250	
		UA26LS31	
		UA26LS32	
		µA239	
	Motorola	**LM239**	**3631**
	National	LM239	
	PMI	CMP-04	
	Raytheon	LM239	
	RCA	**CA239**	**3672,3677**
	Signetics	LM239	
	TI	LM239	
	ThomsonCSF	TDE0139	
◆PM239A	AMD	LM239A	
	Motorola	**LM239A**	**3631**
	National	LM239A	
	PMI	CMP-04	
	RCA	**CA239A**	**3672,3677**
PM255	MicroPwr	MP255	
	National	LF255	
	ThomsonCSF	TDE0155	
◆PM256	National	LF256	
	ThomsonCSF	TDE0156	
PM308A	AMD	LM208A	
	AD	AD208A	
	Fairchild	UA208A	
	MicroPwr	**MP208A**	**3607**
	Motorola	**LM208A**	**3615**
	National	LM208A	
	PMI	PM208A	
PM339A	AMD	LM339A	
	Fairchild	µA339	
	Hitachi	HA17901	
	Motorola	**LM339**	**3631**
	National	LM339	
	NEC	µPC339	
	PMI	CMP-04	
	Raytheon	LM339	
	RCA	**CA339**	**3672,3677**
		CA339A	**3672,3677**
		LM339	
	SGS	LM339	
	TI	LM339	
	ThomsonCSF	LM339	
		TDB0139	
PM355	LinearTech	LF355	
	Motorola	**LF355**	**3616**
	National	LF355	
	ThomsonCSF	LF355	
PM355A	AMD	LF355A	
	LinearTech	LF355A	
	Motorola	LF355A	
	National	LF355A	
PM356	LinearTech	LF356	
	Motorola	**LF356**	**3616**
	National	LF356	
	ThomsonCSF	LF356	
PM356A	AMD	LF356A	
	Burr-Brown	**OPA356A**	**3149,3150**
	LinearTech	LF356A	
	Motorola	LF356A	
	National	LF356A	
PM562	AD	AD562	
	Datel	DAC562	
	Harris	HI562A	
	MicroPwr	MP562	
PM741	AMD	LM107	
	AD	**AD741S**	**3507**
	Burr-Brown	3500	
	LinearTech	LM107	
	National	LH741A	
		LM107	
	Raytheon	RC741	
	SiliconG	SG107	
	TI	**LM107**	**718**
	ThomsonCSF	LM107	
PM747	AMD	747	
	Fairchild	µA747	
	Hitachi	HA17747	
	MicroPwr	MPOP04	
	Motorola	**MC1747**	**3617**
	National	LM747	
	NEC	µPC251	
	PMI	**OP-04**	**3636**
	Raytheon	RC747	
		RM747	
	RCA	**CA747**	**3672**
	Signetics	**µA747**	**3721**
	TeledyneS	747	
	TI	µA747	
REF-01AZ	AD	AD581	
	Harris	HA1608	
	LinearTech	LTREF01	
		REF-01A	
	Maxim	REF01	
	MicroPwr	MP5531	
		MPREF01	
	Motorola	MC1400AG10	
		MC1400AU10	
		MC1500AU10	
	PMI	REF01	
	Raytheon	**REF-01**	**3652**
		REF01	
	TeledyneS	TSC9495	
REF-01EZ	LinearTech	REF-01E	
	Motorola	MC1400AU10	
REF-02AZ	LinearTech	REF-02A	
	Motorola	MC1500AU5	
REF-02EZ	LinearTech	LTREF02	
		REF-02E	
	Maxim	REF02	
	MicroPwr	MP5532	
	Motorola	MC1400AU5	
		MC1500AU5	
	PMI	REF02	
	Raytheon	REF02	
	TeledyneS	TSC9496	
REF-05	**MicroPwr**	**MPREF-05**	**688**
REF-10	**Burr-Brown**	**REF10**	**3151**
	LinearTech	LT1021	
	MicroPwr	**MPREF-10**	**688,3607**
REF01	AD	AD581	
	Harris	HA1608	
	LinearTech	LTREF01	
		REF-01A	
	Maxim	REF01	
	MicroPwr	MP5531	
		MPREF01	
	Motorola	MC1400AG10	
		MC1400AU10	
		MC1500AU10	
	PMI	REF-01AZ	
	Raytheon	**REF-01**	**3652**
		REF01	
	TeledyneS	TSC9495	
REF01CP	MicroPwr	MPS531C	
	TeledyneS	TSC9495	
REF02	LinearTech	LTREF02	
		REF-02E	
	Maxim	REF02	
	MicroPwr	MP5532	
	Motorola	MC1400AU5	
		MC1500AU5	
	PMI	REF-02EZ	
	Raytheon	REF02	
	TeledyneS	TSC9496	
REF02CP	MicroPwr	MP5532C	
	TeledyneS	TSC9496	
RPT-82	Exar	C277	
	PMI	RPT-83	
RPT-83	Exar	C277	
	PMI	RPT-82	
SMP-10	AD	AD583	
	Datel	**SHM-IC-1**	**3163**
	Harris	HA-2425	
	PMI	SMP-11	
	TeledyneP	4856	
SMP-11	AD	AD583	
	Datel	**SHM-IC-1**	**3163**
	Harris	HA-2425	
	PMI	SMP-10	
	TeledyneP	4856	
SW05	AD	ADG200	
	Harris	HI200	
	Intersil	**DG200**	**3196**
		IH200	
		IH5200	**3196**
	MicroPwr	MP200	
	Siliconix	DG200A	
SW06	National	LF12333	
SW201	AD	ADG201	
	Harris	HI201	
	Intersil	DG201	
		IH201	
		IH5201	
	MicroPwr	MP201	
	National	LF11201	
		LF13201	
	Siliconix	DG201A	
SW202	National	LF13202	
	PMI	SW-02	
	Siliconix	DG202	
SW7510	AD	AD7510	
	MicroPwr	MP7510	
SW7511	AD	AD7511	
	MicroPwr	MP7511	

(Continued)

Raytheon Semiconductor

Manufacturer Device	Replacement Source	Device	IC Master Page
OP27	AD	AD510	
		AD517	
	Burr-Brown	OPA27	
	Harris	HAOP27	
	LinearTech	OP27	
		LT1007	
	PMI	OP27	
	Raytheon	**RC714**	**3666**
OP37	Burr-Brown	OPA37	
	Harris	HAOP37	
	LinearTech	OP37	
		LT1037	
	PMI	OP37	
◆29610	AMD	AM27S12	
	Fujitsu	MB7115	
	MMI	6305-1	
		63S240	**4101,4102**
	National	DM74S570	
	Signetics	**N82S130**	**4166**
◆29611	AMD	AM27S13	
	Fujitsu	MB7116	
	Harris	HM7621	
	MMI	6306-1	
		63S241	**4101,4102**
	Motorola	**MCM7621**	**4124**
	National	DM74S571	
	Signetics	**N82S131**	**4166**
◆29620	AMD	AM27S28	
	Fujitsu	MB7123	
	MMI	6348-1	
	National	DM74S473	
	Signetics	N82S146	
	TI	TBP28SA42	
29621	AMD	27S29	
		LF157A	
	Fairchild	LF157A	
	Harris	7649	
	MMI	5349-1	
		6349-1	
	National	545472	
		74S472	
		LF157A	
29621	PMI	PM157A	
	Signetics	825147	
	TI	28S42	
29623	AMD	AM27S29	
	Fujitsu	MB7124	
	MMI	6349-2	
	National	DM54S472	
		DM74S472	
	Signetics	N82S147	
◆29624	AMD	AM27S30	
	MMI	6340-1	
	National	DM74S475	
		DM77S475	
		DM87S475	
	Signetics	N82S140	
	TI	TBP28SA46	
◆29625	AMD	AM27S31	
	MMI	6341-1	
	Motorola	**MCM7641**	**4124**
	National	DM74S474	
	Signetics	N82S141	
	TI	TBP28S46	
◆29630	AMD	AM27S180	
	Fujitsu	MB7131	
	MMI	6380-1	
	National	DM87S180	
		DM87S229	
	Signetics	N82S180	
	TI	TBP28SA86A	
29631AM	AMD	AM27S181M	
	Cypress	CY7C282M	
	Fairchild	932451	
		93451	
	Fujitsu	MB7132	
	Harris	7681	
	Hitachi	HN25089	
	MMI	5381-1	
		6381	**4102**
		6381-1	
	Motorola	**MCM7681**	**4124**
	National	DM77S181	
		DM77S281	
		DM87S281	
	Raytheon	29632	
	Signetics	82S181	
		NS82HS195	
		S82HS181	
		S82S181	
	TI	28S86	
		TBP28S86AM	
29632	AMD	AM27S181M	
	Cypress	CY7C282M	
	Fairchild	932451	
		93451	
	Fujitsu	MB7132	
	Harris	7681	
	Hitachi	HN25089	
	MMI	5381-1	
		6381	**4102**
		6381-1	
	Motorola	**MCM7681**	**4124**
	National	DM77S181	
		DM77S281	
		DM87S281	
	Raytheon	29631AM	
	Signetics	82S181	
		NS82HS195	
		S82HS181	
		S82S181	
	TI	28S86	
		TBP28S86AM	
29633	AMD	27PS181	
	Signetics	82PS181	
	TI	28P86	
◆29635	Signetics	N82S2708	
		S82S2708	
	TI	TBP28S2708A	
◆29641	AMD	AM27S33	
	Fairchild	93453	
	Fujitsu	MB7122	
	Hitachi	HN25045	
	MMI	5353-1	
		535441	
		6353-1	
		63S441	**4101,4102**
		G35441	
	Motorola	**MCM7643**	**4124**
	National	DM74S573	
	NEC	UPB426	
	Signetics	N72HS137	
		N825137	
		N82S137	**4166**

(Continued)

(Continued)

◆ Discontinued

The manufacturers report their devices can be used as direct replacements.
Performance details often differ, so compare the specifications considering your requirements.

Raytheon Semiconductor (Cont'd)

Manufacturer Device	Replacement Source	Device	IC Master Page
◆29641	Signetics	S82S195	
	TI	TBP24S41	
◆29643	AMD	AM27PS41	
◆29650	AMD	AM27S184	
	Fujitsu	MB7127	
	Hitachi	HM25045	
	MMI	6388	
		6388-1	
	National	DM87S184	
	Signetics	N82S184	
	TI	TBP24SA81	
29651	AMD	27S185	
		AM27S185	
	Fujitsu	MB7128	
	Hitachi	HN25085	
	MMI	5389	
		6389	**4102**
		6389-1	
		63S841	**4101,4102**
	Motorola	**MCM7685**	**4124**
	National	77S185	
		87S185	
		DM87S185	
	Raytheon	**29651A**	**4134**
	Signetics	82S185	
		N82HS185	
		N82S185	**4166**
	TI	24S81	
		TBP24S81	
29651A	AMD	27S185	
		AM27S185	
	Fujitsu	MB7128	
	Hitachi	HN25085	
	MMI	5389	
		6389	**4102**
		6389-1	
		63S841	**4101,4102**
	Motorola	**MCM7685**	**4124**
	National	77S185	
		87S185	
		DM87S185	
	Raytheon	29651	
	Signetics	82S185	
		N82HS185	
		N82S185	**4166**
	TI	24S81	
		TBP24S81	
29651AM	MMI	5389	
		5389-1	
	National	DM77S185	
	Signetics	S82HS185	
		S82S185	
	TI	TBP24S81M	
29653	AMD	27PS185	
◆29660	AMD	AM27S20	
	Fujitsu	MB7113	
	MMI	6300-1	
		63S140	**4101,4102**
	National	DM74S387	
	Signetics	**N82S126**	**4166**
	TI	TBP24SA10	
29671	AMD	27S43	
		AM27S43	
	Fujitsu	MB7142	
	MMI	**53S3281**	**691,4101**
		63S3281	**4101,4103**
	National	77S321	
		87S321	
		DM87S321	
	Signetics	82S321	
		N82S321	**4167**
29681	EXEL	XL46C16	
	Fairchild	932511M	
	Fujitsu	MB7138E	
	Harris	HM6616	
		HM76161	
	Hitachi	HN25169S	
	MMI	**53S1681**	**4101**
	Motorola	**MCM76161**	**4124**
	National	DM77S191	
		DM77S191A	
		DM77S291	
		DM77S291A	
	Raytheon	**29681A**	**4134**
		29683	**4134**
		29683A	**4134**
	ThomsonCSF	SFC71191A	
29681A	EXEL	XL46C16	
	Fairchild	932511M	
	Fujitsu	MB7138E	
	Harris	HM6616	
		HM76161	
	Hitachi	HN25169S	
	MMI	**53S1681**	**4101**
	Motorola	**MCM76161**	**4124**
	National	DM77S191	
		DM77S191A	
		DM77S291	
		DM77S291A	
	Raytheon	**29681**	**4134**
		29683	**4134**
		29683A	**4134**
	ThomsonCSF	SFC71191A	
29683	EXEL	XL46C16	
	Fairchild	932511M	
	Fujitsu	MB7138E	
	Harris	HM6616	
		HM76161	
	Hitachi	HN25169S	
	MMI	**53S1681**	**4101**
	Motorola	**MCM76161**	**4124**
	National	DM77S191	
		DM77S191A	
		DM77S291	
		DM77S291A	
	Raytheon	**29681**	**4134**
		29681A	**4134**
		29683A	**4134**
	ThomsonCSF	SFC71191A	
29683A	EXEL	XL46C16	
	Fairchild	932511M	
	Fujitsu	MB7138E	
	Harris	HM6616	
		HM76161	
	Hitachi	HN25169S	
	MMI	**53S1681**	**4101**
	Motorola	**MCM76161**	**4124**
	National	DM77S191	
		DM77S191A	
		DM77S291	
		DM77S291A	
	Raytheon	**29681**	**4134**
		29681A	**4134**
		29683	**4134**
	ThomsonCSF	SFC71191A	
29VP864	AMD	27S49	
		AM27S49	
	Cypress	CY7C264	
	Fairchild	32Z565	
		93565	
	Fujitsu	7144H	
		MB7144	
	Harris	76641	
	Signetics	82641	
54LS192	**Fairchild**	**54LS192**	**613**
	Motorola	**SN54LS192**	**1127**
	National	DM54LS192	
	SGS	T54LS192	
	Signetics	54LS192	
	TI	SN54LS192	
DAC-08	AMD	AM1408	
		DAC-08	
		SSS1408	
	AD	AD1408	
		ADDAC-08	
	Datel	DAC-08B	
		DAC-I8BC	
		DAC-IC8B	
		DAC-IC8BC	**3162**
	Fairchild	DAC-08	
		MA0802M	
		µA0801	
		µA0802	
	Hitachi	HA17408	
	Motorola	**DAC-08**	**3630**
		MC1408	
	National	DAC0801	
		DAC0802	
		DAC0806	
		DAC0807	
		DAC0808	
	NEC	µPC624	
	PMI	**DAC-08**	**3637,3639**
		DAC-1408	
	Signetics	MC1408	
DAC-10	**Datel**	**DAC-IC10B**	**3162**
	PMI	DAC-10	
HA4741	Exar	XR4751	
	Intersil	LM348	
	Motorola	**MC4741**	**3618**
	National	LM348	
LH2101	AMD	LH2101	
	Intersil	LH2101	
	National	LH2101	
LH2111	National	LH2111	
◆LH2311	Intersil	LH2311	
	National	LH2311	
LM101	AMD	LM101	
	AD	AD101	
	Fairchild	µA101	
	Intersil	AD101	
	LinearTech	LM101	
	Motorola	LM101	
	SiliconG	SG101	
	ThomsonCSF	LM101	
◆LM107	AMD	LM107	
	AD	**AD741S**	**3507**
	Burr-Brown	3500	
	LinearTech	LM107	
	National	LH741A	
		LM107	
	PMI	PM741	
	Raytheon	RC741	
	SiliconG	SG107	
	TI	**LM107**	**718**
	ThomsonCSF	LM107	
LM111	AD	AD111	
	Fairchild	µA111	
	LinearTech	LM111	
	Motorola	**LM111**	**3631**
	National	LM111	
	Signetics	**LM111**	**3725**
	SiliconG	SG111	
	TI	**LM111**	**719**
	ThomsonCSF	LM111	
◆LM118	Harris	LM118	
	LinearTech	LM118	
	National	LM118	
	TI	LM118	
◆LM124A	AMD	LM124A	
	LinearTech	LT1014	
	Motorola	LM124A	
	National	LM124A	
	RCA	CA124A	
	Signetics	LM124A	
	SiliconG	SG124	
	TI	LM124A	
◆LM129	LinearTech	LM129	
	National	LM129	
◆LM13600	Exar	XR13600	
	National	LM13600	
	PMI	LM13600	
LM139	Fairchild	µA139	
	Motorola	**LM139**	**3631**
	National	LM139	
	PMI	CMP-04	
		PM139	
	RCA	**CA139**	**3672,3677**
	Signetics	LM139	
	TI	**LM139**	**719**
◆LM146	Exar	XR146	
	National	LM140	
LM146-2	National	LM146-2	
LM148	LinearTech	LT1014	
	MicroPwr	OP11	
	National	LM148	
	PMI	OP11	
	Raytheon	RM4156	
		RM4158	
	TI	**LM148**	**719**
◆LM149	AMD	LM149	
	National	LM149	
◆LM211	AD	AD211	
	Motorola	**LM211**	**3631**
	National	LM211	
	RCA	LM211	
	Signetics	**LM211**	**3725**
	SiliconG	SG211	
	TI	LM211	
	ThomsonCSF	LM211	
◆LM218	National	LM218	
	TI	LM218	
	ThomsonCSF	TDE0118	
LM239	Fairchild	UA250	
		UA26LS31	
		UA26LS32	
		µA239	
	Motorola	**LM239**	**3631**
	National	LM239	
	PMI	CMP-04	
		PM239	
LM239	**RCA**	**CA239**	**3672,3677**
	Signetics	LM239	
	TI	LM239	
	ThomsonCSF	TDE0139	
◆LM246	Exar	XR246	
	National	LM246	
	ThomsonCSF	TDE0146	
LM2900	Hitachi	HA17301	
	Motorola	**LM2900**	**3618**
		MC3301	**3618**
	National	LM2900	
		LM3301	
	Raytheon	RC3301	
	TI	LM2900	
LM2901	Cypress	CY7C901	
	Fairchild	µA2901	
		µA3302	
	Motorola	**LM2901**	**3631**
		MC3302	**3631**
	National	LM2901	
		LM3302	
	NEC	µPC2901	
	PMI	CMP-04	
	Raytheon	RC3302	
	RCA	CA3302	
	SGS	LM2901	
		MC3302	
	Signetics	**LM2901**	**3721,3722**
		MC3302	**3721**
	SiliconG	SG324A	
	TI	LM2901	
		LM3302	
	ThomsonCSF	LM2901	
LM2902	Fairchild	µA2902	
	Hitachi	HA17902	
	Motorola	**LM2902**	**3618**
	National	LM2902	
	NEC	µPC2902	
	SGS	LM2902	
	TI	LM2902	
	ThomsonCSF	LM2902	
LM301	AD	AD301	
	Fairchild	µA301A	
	Intersil	AD301	
	LinearTech	LM301	
		LM301A	
	Motorola	LM301	
	National	LM301	
		LM301A	
	NEC	µPC157	
		µPC301	
	RCA	CA301	
		LM301	
	SiliconG	SG301	
	TI	LM301	
		LM301A	
	ThomsonCSF	LM301A	
	Toshiba	TA7506	
LM308	AD	AD308	
	Burr-Brown	3500	
		3501	
	Fairchild	µA308	
	Intersil	AD308	
		LM308	**3600,3601**
	MicroPwr	**MP308**	**3607**
	Motorola	**LM308**	**3615**
	National	LM308	
LM311	AD	AD311	
	Fairchild	µA311	
	LinearTech	LM311	
	Motorola	**LM2903**	**3631**
		LM311	**3631**
	National	LM2903	
		LM311	
	NEC	µPC271	
		µPC311	
	RCA	**CA311**	**3672,3677**
		LM311	
	SGS	LM2903	
		LM311	
	Signetics	**LM2903**	**3725**
		LM311	**3721**
	SiliconG	SG311	
	TI	LM2903	
		LM311	
	ThomsonCSF	LM2903	
		LM311	
		SFC3111	
◆LM318	AD	AD518	
	Harris	LM318	
	LinearTech	LM318	
	National	LM318	

(Continued)

◆ Discontinued

Bold face device numbers indicate manufacturers data is provided in the IC Master on the pages noted.

Raytheon Semiconductor (Cont'd)

Manufacturer Device	Replacement Source	Device	IC Master Page
◆LM318	NEC	μPC159	
	TI	LM318	
	ThomsonCSF	LM318	
		TDB0118	
◆LM329	LinearTech	LM329	
	National	LM329	
LM339	AMD	LM339A	
	Fairchild	μA339	
	Hitachi	HA17901	
	Motorola	**LM339**	**3631**
	National	LM339	
	NEC	μPC339	
	PMI	CMP-04	
		PM339A	
	RCA	**CA339**	**3672,3677**
		CA339A	**3672,3677**
		LM339	
	SGS	LM339	
	TI	LM339	
	ThomsonCSF	LM339	
		TDB0139	
◆LM346	Exar	XR346	
	Harris	HA2740	
	National	LM346	
	ThomsonCSF	LM346	
LM3900	**Motorola**	**MC3401**	**3618**
	National	LM3401	
		LM3900	
	Raytheon	RC3401	
	RCA	**CA3401**	**3674**
	TI	LM3900	
OP-27	Burr-Brown	OP27	
	LinearTech	OP27	
	MicroPwr	MP027	
	PMI	OP27	
OP-37	Burr-Brown	OP37	
	LinearTech	OP37	
	MicroPwr	MPOP37	
	PMI	OP37	
OP07	AD	AD517	
		OP-07	
	Fairchild	UA714	
	Harris	HA-OP07	
		HA5130	
		HA5135	
	LinearTech	OP-07	
	Micra	MC0021	
	MicroPwr	MPOP07	
	NEC	UPC264	
	PMI	OP07	
	TI	OP07D	
◆RC1437	**Motorola**	**MC1437**	**3617**
RC3301	Hitachi	HA17301	
	Motorola	**LM2900**	**3618**
		MC3301	**3618**
	National	LM2900	
		LM3301	
	Raytheon	LM2900	
	TI	LM2900	
RC3302	Cypress	CY7C901	
	Fairchild	μA2901	
		μA3302	
	Motorola	**LM2901**	**3631**
		MC3302	**3631**
	National	LM2901	
		LM3302	
	NEC	μPC2901	
	PMI	CMP-04	
	Raytheon	LM2901	
	RCA	CA3302	
	SGS	LM2901	
		MC3302	
	Signetics	**LM2901**	**3721,3722**
		MC3302	**3721**
	SiliconG	SG324A	
	TI	LM2901	
		LM3302	
	ThomsonCSF	LM2901	
RC3401	**Motorola**	**MC3401**	**3618**
	National	LM3401	
		LM3900	
	Raytheon	LM3900	
	RCA	**CA3401**	**3674**
	TI	LM3900	
RC4151	**Exar**	**XR4151**	**3561**
	Raytheon	RM4151	
		RV4151	
	TI	XR4151	
RC4152	TI	XR4152	
RC4194	Exar	XR4194	
	MCE	MCE-4194	
	Raytheon	RM4194	
RC4195	Exar	XR1468	
		XR4195	
	Motorola	**MC1468**	**3627**
	SiliconG	SG1468	
		SG2501A	
		SG3501A	
		SG4501	
RC4444	**Motorola**	**MC3416**	**3633**
◆RC4531	AnalogSys	MA332	
	Datel	AM-453-2C	
	Exar	**XR5534**	**3557**
	Raytheon	RC5534	
	Signetics	**NE5534**	**3708,3720,3729**
		NE5534A	**3708,3720,3729**
	SSM	SSM2134	
	TI	NE5534	
		NE5534A	
RC4558	Exar	XR4558	
	Fairchild	μA4558	
	Motorola	**MC4558**	**3617**
	National	LM1458	
	TI	RC4558	
RC4560	**Exar**	**XR4560**	**3555**
RC4739	Exar	XR4739	
	Fairchild	μA739	
		μA749	
	National	LM1303	
	SGS	TBA231	
	TI	SN76131	
		SN76149	
RC4805	PMI	CMP-05	
RC5534	AnalogSys	MA332	
	Datel	AM-453-2C	
	Exar	**XR5534**	**3557**
	Signetics	**NE5534**	**3708,3720,3729**
		NE5534A	**3708,3720,3729**
	SSM	SSM2134	
	TI	NE5534	
		NE5534A	
RC555	Exar	XR555	
	Fairchild	μA555	
	Hitachi	HA17555	
	Intersil	NE555	
	Mitsubishi	M51841	
		M51848	
		M5251	
		M5E555	
	Motorola	MC1455	
	NEC	μPC1555	
	RCA	CA555	
	Sanyo	LB8555	
	SGS	NE555	
	Signetics	**NE555**	**3721**
		NE555N	
	TI	NE555	
	ThomsonCSF	LM555	
	Samsung	**NE555**	**3679**
◆RC592	Fairchild	μA733	
	Hitachi	HA17733	
	Intersil	μA733	
	Motorola	**MC1733**	**3616**
		NE592	
	National	LM733	
	Signetics	**μA733**	**3721,3729**
	TI	μA733	
◆RC709	Fairchild	μA709	
	Hitachi	HA1303	
	Motorola	**MC1709**	**3615**
	National	LM1709	
		LM709	
	NEC	μPC255	
		μPC55	
	RCA	**CA3038**	**3672**
	TI	μA709	
	ThomsonCSF	SFC2709	
	Toshiba	TA7502	
RC714	AD	AD510	
		AD517	
	Burr-Brown	OPA27	
	Harris	HAOP27	
	LinearTech	OP27	
		LT1007	
	PMI	OP27	
	Raytheon	OP27	
RC723	Fairchild	μA723	
	Hitachi	HA17723	
	Intersil	LM723	
	Motorola	**MC1723**	**3625**
	National	LM723	
	Raytheon	RM723	
	RCA	CA723	
		LM723	
	SGS	L123	
		LM723	
	Signetics	**μA723**	**3721,3730**
	SiliconG	SG723	
	TI	μA723	
	ThomsonCSF	LM723	
◆RC733	Fairchild	μA733	
	Hitachi	HA17733	
	Intersil	μA733	
	Motorola	**MC1733**	**3616**
		NE592	
	National	LM733	
	Signetics	**μA733**	**3721,3729**
	TI	μA733	
RC741	AMD	LM107	
	AD	**AD741S**	**3507**
	Burr-Brown	3500	
	LinearTech	LM107	
	National	LH741A	
		LM107	
	PMI	PM741	
	SiliconG	SG107	
	TI	**LM107**	**718**
	ThomsonCSF	LM107	
RC747	AMD	747	
	Fairchild	μA747	
	Hitachi	HA17747	
	MicroPwr	MPOP04	
	Motorola	**MC1747**	**3617**
	National	LM747	
	NEC	μPC251	
	PMI	**OP-04**	**3636**
		PM747	
	Raytheon	RM747	
	RCA	**CA747**	**3672**
	Signetics	**μA747**	**3721**
	TeledyneS	747	
	TI	μA747	
RC7523	Motorola	MC7523	
	National	LM7523	
	TI	SN7523	
RC7528	Motorola	MC7528	
	TI	SN7528	
	ThomsonCSF	SFC2528	
RC7529	Fairchild	7529	
	Motorola	MC7529	
	National	LM7529	
RC8230	Fairchild	9312	
	National	DM8312	
	Raytheon	RC9312	
RC8234	**Signetics**	**N8234**	**1175**
RC8242	**Fairchild**	**74LS266**	**5311**
	Motorola	**SN74LS266**	**1123**
	National	DM74LS266	
	Panasonic	DN74LS266	
	SGS	T74LS266	
	Signetics	**74LS266**	**1158**
		N8242	**1175**
	TI	SN74LS266	
RC8243	Signetics	N8243	
RC8250	National	8250A	
RC8252	Fairchild	9031	
		9301	
	National	DM8301	
		DM9301	
	Signetics	S8252	
RC8262	**Signetics**	**N8262**	**1175**
RC8266	**Signetics**	**N8266**	**1175**
RC8270	TI	SN74178	
RC8271	Fairchild	74179	
	Signetics	**N8271**	**1175**
	TI	SN74179	
RC8273	**Signetics**	**N8273**	**1173**
RC8274	**Signetics**	**N8274**	**1173**
◆RC8277	Fairchild	9328	
RC8280	Fairchild	74176	
		96176	
	National	DM74176	
		DM8280	
	Signetics	74176	
	TI	SN74176	
RC8281	Fairchild	74177	
	National	DM74177	
		DM8281	
RC8281	Signetics	74177	
	TI	SN74177	
RC8290	Fairchild	74196	
	National	DM74196	
		DM8290	
	Signetics	74196	
	TI	SN74196	
RC8291	Fairchild	74197	
	National	DM74197	
		DM8291	
	Signetics	74197	
	TI	SN74197	
RC8T09	**Signetics**	**N8T09**	**1175**
RC8T10	Fairchild	74173	
	National	DM74173	
		DM8551	
	Signetics	**N8T10**	**1175**
	TI	SN74173	
RC8T20	**Signetics**	**N8T20**	**1175**
◆RC930	**Fairchild**	**930**	**609,618,622,623**
		9930	
	Motorola	MC830	
		MC930	
	National	DM930	
	Raytheon	RM930	
RC9304	Raytheon	RM9304	
RC9308	Fairchild	9308	
	TI	SN74116	
RC9311	Fairchild	9311	
	National	DM7213	
		DM74154	
		DM8311	
	Signetics	**74154**	**1157**
	TI	SN74154	
RC9312	Fairchild	9312	
	National	DM8312	
	Raytheon	RC8230	
RC9316	Fairchild	9316	
◆RC932	**Fairchild**	**932**	**618**
		9932	
	Motorola	MC932	
	National	DM932	
	Raytheon	RM932	
RC9322	Fairchild	9322	
	National	DM8322	
◆RC933	Fairchild	9933	
	Motorola	MC933	
	National	DM933	
◆RC934	Motorola	MC934	
	Raytheon	RM934	
RC9341	Hitachi	HD74181	
	National	DM74181	
	Signetics	**74181**	**1157**
	TI	SN74181	
◆RC935	Fairchild	9135	
		9935	
	Motorola	MC835	
		MC935	
	National	DM935	
◆RC936	**Fairchild**	**936**	**609,618,622,623**
		9936	
	Motorola	MC936	
	National	DM936	
RC9360	Fairchild	74192	
	National	DM74192	
		DM8560	
	Signetics	**74192**	**1157**
	TI	SN74192	
◆RC937	**Fairchild**	**937**	**618**
		9937	
	Motorola	MC837	
		MC937	
	National	DM937	
◆RC941	Motorola	MC841	
◆RC944	**Fairchild**	**944**	**618**
		9944	
	Motorola	MC944	
	National	DM944	
◆RC945	**Fairchild**	**945**	**618**
		9945	
	Motorola	MC945	
	National	DM945	
◆RC946	**Fairchild**	**946**	**609,618,622,623**
		9946	
	Motorola	MC946	
	National	DM946	
◆RC948	**Fairchild**	**948**	**618**
		9948	

(Continued)

◆ Discontinued

The manufacturers report their devices can be used as direct replacements.
Performance details often differ, so compare the specifications considering your requirements.

Raytheon Semiconductor (Cont'd)

Manufacturer Device	Replacement Source	Device	IC Master Page
◆RC948	Motorola	MC948	
	National	DM948	
◆RC949	**Fairchild**	**949**	**618**
	Motorola	MC949	
	National	DM949	
	Raytheon	RM949	
◆RC950	Fairchild	9950	
	Motorola	MC950	
◆RC951	Fairchild	9951	
	Motorola	MC851	
		MC852	
		MC951	
	Raytheon	RM951	
◆RC957	Fairchild	9157	
	Motorola	MC857	
		MC957	
	National	DM9567	
		DM957	
	Raytheon	RM957	
◆RC958	Fairchild	9158	
	Motorola	MC858	
		MC958	
	National	DM958	
	Raytheon	RM958	
◆RC961	Fairchild	9961	
	Motorola	MC961	
	National	DM961	
◆RC962	**Fairchild**	**962**	**609,618,622,623**
		9962	
	Motorola	MC962	
	National	DM962	
◆RC963	Fairchild	9963	
	Motorola	MC963	
	National	DM963	
	Raytheon	RM963	
◆RC993	**Fairchild**	**9093**	**618**
	Motorola	MC853	
		MC953	
	National	DM9093	
	Raytheon	RM993	
◆RC994	Fairchild	9094	
	Motorola	MC856	
		MC956	
	National	DM9094	
	Raytheon	RM9094	
		RM994	
◆RC997	Fairchild	9097	
	Motorola	MC855	
		MC955	
	National	DM9097	
	Raytheon	RM997	
REF-01	AD	AD581	
	Harris	HA1608	
	LinearTech	LTREF01	
		REF-01A	
	Maxim	REF01	
	MicroPwr	MP5531	
		MPREF01	
	Motorola	MC1400AG10	
		MC1400AU10	
		MC1500AU10	
	PMI	REF-01AZ	
		REF01	
	Raytheon	REF01	
	TeledyneS	TSC9495	
REF01	AD	AD581	
	Harris	HA1608	
	LinearTech	LTREF01	
		REF-01A	
	Maxim	REF01	
	MicroPwr	MP5531	
		MPREF01	
	Motorola	MC1400AG10	
		MC1400AU10	
		MC1500AU10	
	PMI	REF-01AZ	
		REF01	
	Raytheon	**REF-01**	**3652**
	TeledyneS	TSC9495	
REF02	LinearTech	LTREF02	
		REF-02E	
	Maxim	REF02	
	MicroPwr	MP5532	
	Motorola	MC1400AU5	
		MC1500AU5	
	PMI	REF-02EZ	
		REF02	
	TeledyneS	TSC9496	

Manufacturer Device	Replacement Source	Device	IC Master Page
RF8601	Fairchild	74122	
		9601	
	National	DM8601	
		DM9601	
	Raytheon	RF9601	
	Signetics	**N8T22**	**1175**
		S8T22	
	TI	SN74122	
RF8602	Fairchild	9602	
	National	DM8602	
		DM9602	
	Raytheon	RF9602	
RF9601	Fairchild	74122	
		9601	
	National	DM8601	
		DM9601	
	Raytheon	RF8601	
	Signetics	**N8T22**	**1175**
		S8T22	
	TI	SN74122	
RF9602	Fairchild	9602	
	National	DM8602	
		DM9602	
	Raytheon	RF8602	
RM1537	**Motorola**	**MC1537**	**3617**
RM3403	Exar	XR3403M	
◆RM4131	**Elantec**	**EHA2600**	**3538**
	Fairchild	µA741	
	Harris	HA-2600	
	Motorola	**MC1556**	**3616**
	TeledyneP	1326	
	TI	MC1556	
RM4136	Exar	XR4136M	
	TI	**RM4136**	**719**
RM4137	**Signetics**	**MC3503**	**3729**
	TI	MC3503	
RM4139	LinearTech	LT1013	
	Motorola	**LM158**	**3617**
	National	LM158A	
	RCA	**CA158A**	**3672**
	Signetics	**LM158**	**3729**
	TI	**LM158**	**718**
RM4151	**Exar**	**XR4151**	**3561**
	Raytheon	**RC4151**	**3665**
		RV4151	
	TI	XR4151	
RM4152	TI	XR4152	
RM4156	LinearTech	LT1014	
	MicroPwr	OP11	
	National	LM148	
	PMI	OP11	
	Raytheon	LM148	
		RM4158	
	TI	**LM148**	**719**
RM4158	LinearTech	LT1014	
	MicroPwr	OP11	
	National	LM148	
	PMI	OP11	
	Raytheon	LM148	
		RM4156	
	TI	**LM148**	**719**
RM4194	Exar	XR4194	
	MCE	MCE-4194	
	Raytheon	RC4194	
RM4195	Exar	XR1568	
	Motorola	**MC1568**	**3627**
	SiliconG	SG1501A	
		SG1568	
RM5524	Fairchild	MC5524	
	Motorola	MC5524	
	National	LM5524	
	TI	SN5524	
RM5534	Datel	AM-453-2M	
	Signetics	**SE5534**	**3708,3720,3729**
		SE5534A	**3708,3720,3729**
RM555	Exar	XR555M	
	Intersil	SE555	
	Motorola	MC1555	
	Signetics	**SE555**	**3724,3728**
	TI	**SE555**	**720**
◆RM709	Fairchild	µA709	
	Hitachi	HA1303	
	Motorola	**MC1709**	**3615**
	National	LM1709	
		LM709	
	NEC	µPC255	
		µPC55	
	RCA	**CA3038**	**3672**
	TI	µA709	

(Continued)

Manufacturer Device	Replacement Source	Device	IC Master Page
◆RM709	ThomsonCSF	SFC2709	
	Toshiba	TA7502	
RM723	Fairchild	µA723	
	Hitachi	HA17723	
	Intersil	LM723	
	Motorola	**MC1723**	**3625**
	National	LM723	
	Raytheon	RC723	
	RCA	CA723	
		LM723	
	SGS	L123	
		LM723	
	Signetics	**µA723**	**3721,3730**
	SiliconG	SG723	
	TI	µA723	
	ThomsonCSF	LM723	
RM725	AMD	SSS725	
	Fairchild	µA725	
	National	LM725	
	PMI	OP06	
RM747	AMD	747	
	Fairchild	µA747	
	Hitachi	HA17747	
	MicroPwr	MPOP04	
	Motorola	**MC1747**	**3617**
	National	LM747	
	NEC	µPC251	
	PMI	**OP-04**	**3636**
		PM747	
	Raytheon	RC747	
	RCA	**CA747**	**3672**
	Signetics	**µA747**	**3721**
	TeledyneS	747	
	TI	µA747	
RM8202	Signetics	S8202	
◆RM8230	National	DM9312	
	Raytheon	RM9312	
RM8231	Signetics	S8231	
RM8241	**Motorola**	**SN54LS386**	**1123**
	National	DM54LS386	
	Signetics	S82S41	
	TI	SN54LS386	
RM8250	Signetics	S8250	
◆RM8252	Fairchild	9031	
		9301	
	National	DM8301	
		DM9301	
	Raytheon	RC8252	
	Signetics	S8252	
RM8262	Signetics	S8262	
RM8266	Signetics	S8266	
RM8270	Signetics	S8270	
	TI	**SN54178**	**712**
RM8271	Signetics	S8271	
	TI	**SN54179**	**712**
◆RM8277	Signetics	S8277	
RM8280	National	DM54176	
	Signetics	54176	
		S8280	
	TI	**SN54176**	**712**
RM8281	National	DM54177	
		DM7281	
	Signetics	54177	
		S7281	
		S8281	
	TI	**SN54177**	**712**
RM8T09	Signetics	S8T09	
RM8T10	**Fairchild**	**54173**	**617**
	National	DM54173	
		DM7551	
	TI	**SN54173**	**712**
RM9094	Fairchild	9094	
	Motorola	MC856	
		MC956	
	National	DM9094	
	Raytheon	RM994	
RM930	**Fairchild**	**930**	**609,618,622,623**
		9930	
	Motorola	MC830	
		MC930	
	National	DM930	
RM9304	Raytheon	RC9304	
RM9310	National	DM54160	
	Signetics	54160	
	TI	**SN54160**	**712**
RM9311	**Fairchild**	**54154**	**616**
	National	DM54154	
		DM9311	
	Signetics	54154	
	TI	**SN54154**	**712**
RM9312	National	DM9312	

Manufacturer Device	Replacement Source	Device	IC Master Page
RM9316	National	DM9316	
RM932	**Fairchild**	**932**	**618**
		9932	
	Motorola	MC932	
	National	DM932	
RM9322	National	DM9322	
RM934	Motorola	MC934	
RM9341	National	DM54181	
	Signetics	54181	
	TI	**SN54181**	**712**
RM9342	National	DM54182	
	TI	**SN54182**	**712**
RM939	National	DM939	
RM941	Fairchild	9941	
	Motorola	MC941	
RM949	**Fairchild**	**949**	**618**
	Motorola	MC949	
	National	DM949	
RM951	Fairchild	9951	
	Motorola	MC851	
		MC852	
		MC951	
RM952	**Fairchild**	**9099**	**618**
	Motorola	MC952	
	Raytheon	RM999	
RM957	Fairchild	9157	
	Motorola	MC857	
		MC957	
	National	DM9567	
		DM957	
RM958	Fairchild	9158	
	Motorola	MC858	
		MC958	
	National	DM958	
RM963	Fairchild	9963	
	Motorola	MC963	
	National	DM963	
RM993	**Fairchild**	**9093**	**618**
	Motorola	MC853	
		MC953	
	National	DM9093	
RM994	Fairchild	9094	
	Motorola	MC856	
		MC956	
	National	DM9094	
	Raytheon	RM9094	
RM997	Fairchild	9097	
	Motorola	MC855	
		MC955	
	National	DM9097	
RM999	**Fairchild**	**9099**	**618**
	Motorola	MC952	
	Raytheon	RM952	
RV4151	**Exar**	**XR4151**	**3561**
	Raytheon	**RC4151**	**3665**
		RM4151	
	TI	XR4151	
RV4156	TI	XR4156	
SP3724	Fairchild	FQ3724	
	Motorola	MQ3724	
SP3725	Fairchild	FQ3725	
	Motorola	MQ3725	
	National	DH3725	
XR2207	Exar	XR2207	
XR2211	Exar	XR2211	
◆XR2567	Exar	XR2567	
		XR567	
	MCE	MCE-567	
	National	LM567	
	Signetics	**NE567**	**3720**
		SE567	**3728**
	Samsung	LM567	

RCA Solid State Division

Manufacturer Device	Replacement Source	Device	IC Master Page
1822	GouldAMI	S6551	
	National	6551	
	Rockwell	R6551	
	Toshiba	5101	
6508	Fujitsu	8401	
	GouldAMI	6508	
	Harris	HM6508	
	Intersil	6508	
		IM6508-1	
	MicroPwr	6508	
	National	6508	
		74C929	
	NEC	443	
	Toshiba	5508	
CA081	PMI	OP-16	
	ThomsonCSF	LF351	
		TL081	

◆ Discontinued

Bold face device numbers indicate manufacturers data is provided in the IC Master on the pages noted.

RCA Solid State Division (Cont'd)

Manufacturer Device	Replacement Source	Device	IC Master Page
CA082	**Exar**	**XR082**	**3555**
	SGS	TL082	
	TI	TL082	
	ThomsonCSF	TDB0353	
CA084	Exar	XR084	
	Fairchild	μAF774	
	SGS	TL084	
	TI	TL084	
◆CA101	AMD	LM101	
	AD	AD101	
	Fairchild	μA101	
	Intersil	AD101	
	LinearTech	LM101	
	Motorola	LM101	
	Raytheon	LM101	
	SiliconG	SG101	
	ThomsonCSF	LM101	
◆CA107	AMD	LM107	
	AD	**AD741S**	**3507**
	Burr-Brown	3500	
	LinearTech	LM107	
	National	LH741A	
		LM107	
	PMI	PM741	
	Raytheon	RC741	
	SiliconG	SG107	
	TI	**LM107**	**718**
	ThomsonCSF	LM107	
◆CA111	AD	AD111	
	Fairchild	μA111	
	LinearTech	LM111	
	Motorola	**LM111**	**3631**
	National	LM111	
	Raytheon	LM111	
	Signetics	**LM111**	**3725**
	SiliconG	SG111	
	TI	**LM111**	**719**
	ThomsonCSF	LM111	
CA1190	SGS	TDA1190	
		TDA1190Z	
		TDA3190	
	Sprague	ULN-2290	
CA124A	AMD	LM124A	
	LinearTech	LT1014	
	Motorola	LM124A	
	National	LM124A	
	Signetics	LM124A	
	SiliconG	SG124	
	TI	LM124A	
◆CA1310	Exar	XR1310	
	National	LM1310	
	TI	SN76115	
	Toshiba	TA7157	
◆CA1352	**Motorola**	**MC1352**	**3612**
	Sanyo	LA1352	
CA139	Fairchild	μA139	
	Motorola	**LM139**	**3631**
	National	LM139	
	PMI	CMP-04	
		PM139	
	Raytheon	LM139	
	Signetics	LM139	
	TI	**LM139**	**719**
CA1391	**Motorola**	**MC1391**	**3613**
	National	LM1391	
CA1394	**Motorola**	**MC1394**	**3613**
	National	LM1394	
CA139A	AMD	LM139A	
	Motorola	**LM139A**	**3631**
	National	LM139A	
	PMI	CMP-04	
		PM139A	
	TI	**LM139A**	**719**
CA1458	Fairchild	UA1458HC	
	Harris	CM1458	
		HA5102	
	MicroPwr	MPOP14	
	Motorola	**MC1458**	**3617**
	National	LF412	
	NEC	MPC251	
	PMI	OP14	
	SGS	MC1458	
	Signetics	**SA1458**	**3729**
	ThomsonCSF	μA1458	
	Samsung	**MC1458**	**3679**
		MC4558	**3679**
CA1524	Cherry	CS1524	
	Exar	**XR1524**	**3558**
	IPS	**IP1524**	**3599**
			(Continued)
CA1524	LinearTech	LT1524	
	National	LM1524	
	SGS	SG1524	
		UC1524A	
	SiliconG	SG1524	
	Sprague	ULS-8124	
	TI	**SG1524**	**720**
	Unitrode	**UC1524A**	**3739,3739**
◆CA1541	Motorola	MC1441	
CA158A	LinearTech	LT1013	
	Motorola	**LM158**	**3617**
	National	LM158A	
	Raytheon	RM4139	
	Signetics	**LM158**	**3729**
	TI	**LM158**	**718**
◆CA2002	National	LM2002	
		LM2002A	
		LM383	
		LM383A	
	Sprague	ULN-3701	
		ULN-3702	
◆CA2004	National	LM2002	
		LM2002A	
		LM383	
		LM383A	
	Sprague	ULN-3701	
		ULN-3702	
◆CA211	AD	AD211	
	Motorola	**LM211**	**3631**
	National	LM211	
	RCA	LM211	
	Signetics	**LM211**	**3725**
	SiliconG	SG211	
	TI	LM211	
	ThomsonCSF	LM211	
CA2111	**Motorola**	**MC1357**	**3613**
	National	LM2111	
		LM2113	
	Signetics	N5111	
	Sprague	ULN-2111	
	TI	SN76642	
		SN76643	
CA239	Fairchild	UA250	
		UA26LS31	
		UA26LS32	
		μA239	
	Motorola	**LM239**	**3631**
	National	LM239	
	PMI	CMP-04	
		PM239	
	Raytheon	LM239	
	Signetics	LM239	
	TI	LM239	
	ThomsonCSF	TDE0139	
CA239A	AMD	LM239A	
	Motorola	**LM239A**	**3631**
	National	LM239A	
	PMI	CMP-04	
CA2524	Cherry	CS2524	
	Exar	XR2524	
	IPS	**IP2524**	**3599**
	SGS	SG2524	
		UC2524A	
	SiliconG	SG2524	
	Sprague	ULQ-8124	
	TI	SG2524	
	Unitrode	**UC2524A**	**3739,3739**
CA258A	**Motorola**	**LM258**	**3617**
	National	LM258A	
	Signetics	**LM258**	**3729**
	TI	LM258	
	ThomsonCSF	TDE0158	
CA2904	**Motorola**	**LM2904**	**3617**
	TI	LM2904	
	ThomsonCSF	LM2904	
CA3001	Hitachi	HA1110	
	SiliconG	SG3001	
CA301	AD	AD301	
	Fairchild	μA301A	
	Intersil	AD301	
	LinearTech	LM301	
		LM301A	
	Motorola	LM301	
	National	LM301	
		LM301A	
	NEC	μPC157	
		μPC301	
	Raytheon	LM301	
	RCA	LM301	
	SiliconG	SG301	
			(Continued)
CA301	TI	LM301	
		LM301A	
	ThomsonCSF	LM301A	
	Toshiba	TA7506	
CA3011	Motorola	MC1590	
	National	LM3011	
	RCA	CA3012	
CA3012	Motorola	MC1590	
	National	LM3011	
	RCA	CA3011	
CA3018	National	LM3018	
	ThomsonCSF	SFC2018	
CA3019	National	LM3019	
◆CA3036	ThomsonCSF	SFC2036	
CA3038	Fairchild	μA709	
	Hitachi	HA1303	
	Motorola	**MC1709**	**3615**
	National	LM1709	
		LM709	
	NEC	μPC255	
		μPC55	
	TI	μA709	
	ThomsonCSF	SFC2709	
	Toshiba	TA7502	
CA3046	Fairchild	UA3046	
	Motorola	**MC3346**	**3614**
	National	LM3046	
	Plessey	SL3046	
		SL3146	
	RCA	**CA3146**	**3678**
	Sanyo	LA3046	
	SGS	CA3046	
		TBA331	
	SiliconG	SG3046	
		SG3146	
		SG3821	
	Sprague	ULN-2046	
	ThomsonCSF	SFC	
CA3054	Fairchild	UA3054	
	Motorola	**CA3054**	**3614**
	National	LM3054	
	Sprague	ULN-2054	
	ThomsonCSF	SFC2054	
CA3059	Motorola	CA3059	
◆CA3064	Motorola	LM3065	
		M5140	
	National	LM3064	
	RCA	CA3065	
	Sanyo	LA1365	
	TI	SN76666	
CA3065	Motorola	LM3065	
		M5140	
	National	LM3064	
	Sanyo	LA1365	
	TI	SN76666	
◆CA3066	National	LM3066	
	TI	SN76266	
◆CA3067	TI	SN76267	
CA3070	TI	SN76242	
CA3071	TI	SN76243	
CA3072	National	LM3072	
CA3075	National	LM3075	
	TI	SN76675	
◆CA3076	TI	SN76676	
CA3079	Motorola	CA3079	
CA3080	Harris	HA-23080	
CA3081	Sprague	ULN-2081	
CA3082	Sprague	ULN-2082	
CA3083	**RCA**	**CA3183**	**3678**
	SiliconG	SG3083	
		SG3183	
	Sprague	ULN-2083	
CA3086	Fairchild	UA3086	
	Motorola	**MC3386**	**3614**
	National	LM3086	
	Plessey	SL3086	
	Sanyo	LA3086	
	SiliconG	SG3086	
		SG3886	
	Sprague	ULN-2086	
	ThomsonCSF	SFC2086	
CA311	AD	AD311	
	Fairchild	μA311	
	LinearTech	LM311	
	Motorola	**LM2903**	**3631**
		LM311	**3631**
	National	LM2903	
		LM311	
	NEC	μPC271	
		μPC311	
	Raytheon	LM311	
	RCA	LM311	
			(Continued)
CA311	SGS	LM2903	
		LM311	
	Signetics	**LM2903**	**3725**
		LM311	**3721**
	SiliconG	SG311	
	TI	LM2903	
		LM311	
	ThomsonCSF	LM2903	
		LM311	
		SFC3111	
CA3126	National	LM1829	
		LM3126	
CA3127	Plessey	SL3127	
CA3145	Fairchild	μA705	
	Motorola	**MC1309**	**3614**
		MC1311	
	National	LM1800	
	RCA	CA3195	
	Sanyo	LA705	
		LA758	
	Signetics	**μA758**	**3727**
	Sprague	ULN-3809	
		ULN-3812	
	TI	SN76111	
		SN76116	
CA3146	Fairchild	UA3046	
	Motorola	**MC3346**	**3614**
	National	LM3046	
	Plessey	SL3046	
		SL3146	
	RCA	**CA3046**	**3678**
	Sanyo	LA3046	
	SGS	CA3046	
		TBA331	
	SiliconG	SG3046	
		SG3146	
		SG3821	
	Sprague	ULN-2046	
	ThomsonCSF	SFC	
CA3162	AD	AD2020	
CA3172	National	LM1848	
CA3183	**RCA**	**CA3083**	**3678**
	SiliconG	SG3083	
		SG3183	
	Sprague	ULN-2083	
CA3195	Fairchild	μA705	
	Motorola	**MC1309**	**3614**
		MC1311	
	National	LM1800	
	RCA	CA3145	
	Sanyo	LA705	
		LA758	
	Signetics	**μA758**	**3727**
	Sprague	ULN-3809	
		ULN-3812	
	TI	SN76111	
		SN76116	
CA3199	Plessey	SP8611	
CA3217	Hitachi	HA1148	
CA3219	Sprague	ULN-2541	
CA3300	Datel	ADC-883	
	MicroPwr	MP7682	
CA3302	Cypress	CY7C901	
	Fairchild	μA2901	
		μA3302	
	Motorola	**LM2901**	**3631**
		MC3302	**3631**
	National	LM2901	
		LM3302	
	NEC	μPC2901	
	PMI	CMP-04	
	Raytheon	LM2901	
		RC3302	
	SGS	LM2901	
		MC3302	
	Signetics	**LM2901**	**3721,3722**
		MC3302	**3721**
	SiliconG	SG324A	
	TI	LM2901	
		LM3302	
	ThomsonCSF	LM2901	
CA339	AMD	LM339A	
	Fairchild	μA339	
	Hitachi	HA17901	
	Motorola	**LM339**	**3631**
	National	LM339	
	NEC	μPC339	
	PMI	CMP-04	
		PM339A	
	Raytheon	LM339	
	RCA	**CA339A**	**3672,3677**
		LM339	
			(Continued)

◆ Discontinued

The manufacturers report their devices can be used as direct replacements.
Performance details often differ, so compare the specifications considering your requirements.

RCA Solid State Division (Cont'd)

Manufacturer Device	Replacement Source	Device	IC Master Page
CA339	SGS	LM339	
	TI	LM339	
	ThomsonCSF	LM339	
		TDB0139	
CA339A	AMD	LM339A	
	Fairchild	μA339	
	Hitachi	HA17901	
	Motorola	**LM339**	**3631**
	National	LM339	
	NEC	μPC339	
	PMI	CMP-04	
		PM339A	
	Raytheon	LM339	
	RCA	**CA339**	**3672,3677**
		LM339	
	SGS	LM339	
	TI	LM339	
	ThomsonCSF	LM339	
		TDB0139	
CA3401	**Motorola**	**MC3401**	**3618**
	National	LM3401	
		LM3900	
	Raytheon	LM3900	
		RC3401	
	TI	LM3900	
CA3524	Cherry	CS3524	
	Exar	**XR3524**	**3558**
	IPS	**IP3524**	**3599**
		IP3524B	**3599**
	National	LM3524	
	SGS	SG3524	
		UC3524A	
	Signetics	**SG3524**	**3715,3720,3730**
	SiliconG	SG3524B	
	Sprague	ULN-8124	
	TI	SG3524	
	Unitrode	**UC3524A**	**3739,3739**
CA358A	**Motorola**	**LM358**	**3617**
	National	LM358A	
	NEC	μPC358	
	RCA	LM358	
	Sanyo	LA6358	
	SGS	LM358	
	Signetics	**LM358**	**3722,3729**
		NE532	**3729**
	TI	LM358	
	ThomsonCSF	LM358	
CA555	Exar	XR555	
	Fairchild	μA555	
	Hitachi	HA17555	
	Intersil	NE555	
	Mitsubishi	M51841	
		M51848	
		M5251	
		M5E555	
	Motorola	MC1455	
	NEC	μPC1555	
	Raytheon	RC555	
	Sanyo	LB8555	
	SGS	NE555	
	Signetics	**NE555**	**3721**
		NE555N	
	TI	NE555	
	ThomsonCSF	LM555	
	Samsung	**NE555**	**3679**
CA723	Fairchild	μA723	
	Hitachi	HA17723	
	Intersil	LM723	
	Motorola	**MC1723**	**3625**
	National	LM723	
	Raytheon	RC723	
		RM723	
	RCA	LM723	
	SGS	L123	
		LM723	
	Signetics	**μA723**	**3721,3730**
	SiliconG	SG723	
	TI	μA723	
	ThomsonCSF	LM723	
CA747	AMD	747	
	Fairchild	μA747	
	Hitachi	HA17747	
	MicroPwr	MPOP04	
	Motorola	**MC1747**	**3617**
	National	LM747	
	NEC	μPC251	
	PMI	**OP-04**	**3636**
			(Continued)
CA747	PMI	PM747	
	Raytheon	RC747	
		RM747	
	Signetics	**μA747**	**3721**
	TeledyneS	747	
	TI	μA747	
◆CA758	Fairchild	μA705	
	Motorola	**MC1309**	**3614**
		MC1311	
	National	LM1800	
	RCA	CA3145	
		CA3195	
	Sanyo	LA705	
		LA758	
	Signetics	**μA758**	**3727**
	Sprague	ULN-3809	
		ULN-3812	
	TI	SN76111	
		SN76116	
CA7607	Toshiba	TA7607	
CA7611	Toshiba	TA7611	
◆CA810	Fairchild	TBA810	
	SGS	TBA810	
	Telefunken	TDA810	
CD22100	Motorola	MC1452100	
	SGS	M22100	
	SiliconSys	**SSI22100**	**3737**
CD22101	**SiliconSys**	**SSI22101**	**3737**
CD22102	**SiliconSys**	**SSI22102**	**3737**
CD22104	Hughes	H7211	
	Intersil	**ICM7211**	**1091**
	Maxim	ICM7211	
	RCA	**CD22105**	**1147**
	TeledyneS	TSC7211	
CD22105	Hughes	H7211	
	Intersil	**ICM7211**	**1091**
	Maxim	ICM7211	
	RCA	**CD22104**	**1147**
	TeledyneS	TSC7211	
CD22301	**SiliconSys**	**SSI22301**	**3737**
◆CD22416	**Motorola**	**MC14416**	**3633**
◆CD22419	**Motorola**	**MC14419**	**3633**
CD4000	Motorola	MC14000	
	National	CD4000	
	SGS	HCC/HCF4000	
	Signetics	HEF400	
	Solitron	CM4000	
	SSS	SCL4000	
◆CD4000A	Motorola	MC14000	
	National	CD4000	
	RCA	CD4000	
	SGS	HCC/HCF4000	
	Signetics	HEF400	
	Solitron	CM4000	
	SSS	SCL4000	
CD4001	Fairchild	F4001	
	Motorola	MC14001	
	National	CD4001	
		MM74C02	
	OKI	MSM4001	
	Sanyo	LC4001B	
	SGS	HCC/HCF4001	
	Signetics	HEF4001	
	Solitron	CM4001	
	SSS	SCL4001	
	Toshiba	TC4001	
CD4002	Fairchild	F4002	
	Motorola	MC14002	
	National	CD4002	
	SGS	HCC/HCF4002	
	Signetics	HEF4002	
	Solitron	CM4002	
	SSS	SCL4002	
	Toshiba	TC4002	
CD4006	Fairchild	F4006	
	National	CD4006	
	SGS	HCC/HCF4006	
	Signetics	HEF4006	
	Solitron	CM4006	
	SSS	SCL4006	
	Toshiba	TC4006	
◆CD4006A	Fairchild	F4006	
	National	CD4006	
	RCA	CD4006	
	SGS	HCC/HCF4006	
	Signetics	HEF4006	
	Solitron	CM4006	
	SSS	SCL4006	
	Toshiba	TC4006	
CD4006B	Fairchild	F4006B	
	Motorola	MC14006B	
	National	CD4006	
CD4007	Fairchild	F4007	
	Motorola	MC14007	
	National	CD4007	
	SGS	HCC/HCF4007	
	Signetics	HEF4007	
	Solitron	CM4007	
	SSS	SCL4007	
	Toshiba	TC4007	
CD4008	Fairchild	F4008	
	Motorola	MC14008	
	National	CD4008	
		MM74C83	
	SGS	HCC/HCF4008	
	Signetics	HEF4008	
	Solitron	CM4008	
	SSS	SCL4008	
	Toshiba	TC4008	
◆CD4008A	Fairchild	F4008	
	Motorola	MC14008	
	National	CD4008	
		MM74C83	
	RCA	CD4008	
	SGS	HCC/HCF4008	
	Signetics	HEF4008	
	Solitron	CM4008	
	SSS	SCL4008	
	Toshiba	TC4008	
CD4009	National	CD4009	
	SGS	HCC/HCF4009	
	Solitron	CM4009	
	SSS	SCL4009	
	Toshiba	TC4009	
CD4010	National	CD4010	
	SGS	HCC/HCF4010	
	Solitron	CM4010	
	SSS	SCL4010	
	Toshiba	TC4010	
CD40100	SGS	HCC/HCF40100	
CD40101	Fairchild	F4531	
	Motorola	MC14531	
	SGS	HCC/HCF40101	
	Signetics	HEF4531	
	SSS	SCL4531	
	Toshiba	TC4531	
CD40102	SGS	HCC/HCF40102	
CD40103	SGS	HCC/HCF40103	
CD40104	SGS	HCC/HCF40104	
CD40105	SGS	HCC/HCF40105	
CD40106	Fairchild	F40014	
	Motorola	MC14584	
	National	CD40106	
		CD4584	
		MM54C14	
		MM74C14	
	SGS	HCC/HCF40106	
	Signetics	HEF40106	
	SSS	SCL4584	
CD40107	SGS	HCC/HCF40107	
	Toshiba	**TC40107**	**1363**
CD40108	Motorola	MC14580	
	SGS	HCC/HCF40108	
CD4011	Fairchild	F4011	
	Motorola	MC14011	
	National	CD4011	
		MM74C00	
	OKI	MSM4011	
	Sanyo	LC4011	
	SGS	HCC/HCF4011	
	Signetics	HEF4011	
	Solitron	CM4011	
	SSS	SCL4011	
	Toshiba	TC4011	
CD40110	Cypress	CY7C264	
	SGS	HCC/HCF40110	
	Signetics	**N82HS641**	**4167**
CD4012	Fairchild	F4012	
	Motorola	MC14012	
	National	CD4012	
	SGS	HCC/HCF4012	
	Signetics	HEF4012	
	Solitron	CM4012	
	SSS	SCL4012	
	Toshiba	TC4012	
CD4013	Fairchild	F4013	
	Motorola	MC14013	
	National	CD4013	
		MM74C74	
	OKI	MSM4013	
	Sanyo	LC4013	
	SGS	HCC/HCF4013	
	Signetics	HEF4013	
	Solitron	CM4013	
			(Continued)
CD4013	SSS	SCL4013	
	Toshiba	TC4013	
CD4014	Fairchild	F4014	
	Motorola	MC14014	
	National	CD4014	
	SGS	HCC/HCF4014	
	Signetics	HEF4014	
	Solitron	CM4014	
	SSS	SCL4014	
	Toshiba	TC4014	
◆CD4014A	Fairchild	F4014	
	Motorola	MC14014	
	National	CD4014	
	RCA	CD4014	
	SGS	HCC/HCF4014	
	Signetics	HEF4014	
	Solitron	CM4014	
	SSS	SCL4014	
	Toshiba	TC4014	
CD4015	Fairchild	F4015	
	Motorola	MC14015	
	National	CD4015	
		MM74C164	
	OKI	MSM4015	
	Sanyo	LC4015	
	SGS	HCC/HCF4015	
	Signetics	HEF4015	
	Solitron	CM4015	
	SSS	SCL4015	
	Toshiba	TC4015	
CD4016	Fairchild	F4016	
		F4066	
	Motorola	MC14016	
		MC14066	
	National	CD4016	
		CD4066	
	RCA	CD4066	
	Sanyo	LC4016	
		LC4066	
	SGS	HCC/HCF4016	
		HCC/HCF4066	
	Signetics	HEF4016	
		HEF4066	
	Solitron	CM4016	
		CM4066	
		HCF4016	
	SSS	SCL4016	
		SCL4066	
	Toshiba	TC4016	
		TC4066	
CD40160	Fairchild	F40160	
	Motorola	MC14160	
	National	CD40160	
	SSS	SCL4160	
CD40161	Fairchild	F40161	
	Motorola	MC14161	
	National	CD40161	
	SSS	SCL4161	
CD40162	Fairchild	F40162	
	Motorola	MC14162B	
	National	CD40162	
	SSS	SCL4162	
CD40163	Fairchild	F40163	
	Motorola	MC14163B	
	National	CD40163	
	SSS	SCL4163	
CD4017	Fairchild	F4017	
	Motorola	MC14017	
	National	CD4017	
	SGS	HCC/HCF4017	
	Signetics	HEF4017	
	Solitron	CM4017	
	SSS	SCL4017	
	Toshiba	TC4017	
CD40174B	Fairchild	F40174B	
	Motorola	MC14174B	
	National	CD40174B	
	SSS	SCL4174B	
CD40175	Motorola	MC40175	
CD4018	Fairchild	F4018	
	Motorola	MC14018	
	National	CD4018	
	SGS	HCC/HCF4018	
	Signetics	HEF4018	
	Solitron	CM4018	
	SSS	SCL4018	
	Toshiba	TC4018	
CD40181	Motorola	MC14581	
	National	74C181	
	RCA	CD4057	
	SGS	HCC/HCF40181	
	SSS	SCL4581	

◆ Discontinued

Bold face device numbers indicate manufacturers data is provided in the IC Master on the pages noted.

ALTERNATE SOURCE DIRECTORY

RCA Solid State Division (Cont'd)

Manufacturer Device	Replacement Source	Device	IC Master Page
CD40182	Fairchild	F4582	
	Motorola	MC14582	
	National	74C182	
	SGS	HCC/HCF40182	
	SSS	SCL4582	
CD4019	Fairchild	F4019	
	National	CD4019	
	OKI	MSM4019	
	Sanyo	LC4019	
	SGS	HCC/HCF4019	
	Signetics	HEF4019	
	Solitron	CM4019	
	SSS	SCL4019	
	Toshiba	TC4019	
CD40192	Fairchild	F4029	
	Motorola	MC14029	
	National	CD40192	
		CD4029	
	RCA	CD4029	
	SGS	HCC/HCF40192	
		HCC/HCF4029	
	Signetics	HEF40192	
	Solitron	CM4029	
	SSS	SCL4029	
		SCL4192	
	Toshiba	TC40192	
		TC4029	
CD40193	Fairchild	F40193	
	National	CD40193	
		MM54C193	
		MM74C193	
	SGS	HCC/HCF40193	
	Signetics	HEF40193	
	SSS	SCL4193	
	Toshiba	**TC40193**	**1363**
CD40194	Fairchild	F40194	
	Motorola	MC14194	
	SGS	HCC/HCF40194	
	Signetics	HEF40194	
CD4020	Fairchild	F4020	
	Motorola	MC14020	
	National	CD4020	
	SGS	HCC/HCF4020	
	Signetics	HEF4020	
	Solitron	CM4020	
	SSS	SCL4020	
	Toshiba	TC4020	
CD40208	SGS	HCC/HCF40208	
CD4021	Fairchild	F4021	
	Motorola	MC14021	
	National	CD4021	
	SGS	HCC/HCF4021	
	Signetics	HEF4021	
	SSS	SCL4021	
	Toshiba	TC4021	
CD4022	Fairchild	F4022	
	Motorola	MC14022	
	National	CD4022	
	SGS	HCC/HCF4022	
	Signetics	HEF4022	
	Solitron	CM4022	
	SSS	SCL4022	
	Toshiba	TC4022	
CD4023	Fairchild	F4023	
	Motorola	MC14023	
	National	CD4023	
		MM74C10	
	SGS	HCC/HCF4023	
	Signetics	HEF4023	
	Solitron	CM4023	
	SSS	SCL4023	
	Toshiba	TC4023	
CD4024	Fairchild	F4024	
	Motorola	MC14024	
	National	CD4024	
	SGS	HCC/HCF4024	
	Signetics	HEF4024	
	Solitron	CM4024	
	SSS	SCL4024	
	Toshiba	TC4024	
CD4025	Fairchild	F4025	
	Motorola	MC14025	
	National	CD4025	
	SGS	HCC/HCF4025	
	Signetics	HEF4025	
	Solitron	CM4025	
	SSS	SCL4025	
	Toshiba	TC4025	
CD40257	SGS	HCC/HCF40257	
CD4026	SGS	HCC/HCF4026	
	Solitron	CM4026	
	SSS	SCL4026	
◆CD4026A	RCA	CD4026	
	SGS	HCC/HCF4026	
	Solitron	CM4026	
	SSS	SCL4026	
CD4027	Fairchild	F4027	
	Motorola	MC14027	
	National	CD4027	
		MM74C76	
	OKI	MSM4027	
	Sanyo	LC4027	
	SGS	HCC/HCF4027	
	Signetics	HEF4027	
	Solitron	CM4027	
	SSS	SCL4027	
CD4028	Fairchild	F4028	
	Motorola	MC14028	
	National	CD4028	
		MM74C42	
	OKI	MSM4028	
	Sanyo	LC4028	
	SGS	HCC/HCF4028	
	Signetics	HEF4028	
	Solitron	CM4028	
	SSS	SCL4028	
	Toshiba	TC4028	
CD4029	Fairchild	F4029	
	Motorola	MC14029	
	National	CD40192	
		CD4029	
	RCA	CD40192	
	SGS	HCC/HCF40192	
		HCC/HCF4029	
	Signetics	HEF40192	
	Solitron	CM4029	
	SSS	SCL4029	
		SCL4192	
	Toshiba	TC40192	
		TC4029	
CD4030	Fairchild	F4030	
	National	CD4030	
	SGS	HCC/HCF4030	
	Signetics	HEF4030	
	Solitron	CM4030	
	SSS	SCL4030	
	Toshiba	TC4030	
CD4031	Fairchild	F4031	
	National	CD4031	
	SGS	HCC/HCF4031	
	Signetics	HEF4731	
◆CD4031A	Fairchild	F4031	
	National	CD4031	
	RCA	CD4031	
	SGS	HCC/HCF4031	
	Signetics	HEF4731	
CD4031B	Motorola	MC14557B	
	National	CD4031B	
CD4032	Motorola	MC14032	
	SGS	HCC/HCF4032	
	Solitron	CM4032	
	Toshiba	TC4032	
◆CD4032A	Motorola	MC14032	
	RCA	CD4032	
	SGS	HCC/HCF4032	
	Solitron	CM4032	
	Toshiba	TC4032	
CD4033	SGS	HCC/HCF4033	
	Solitron	CM4033	
	SSS	SCL4033	
◆CD4033A	RCA	CD4033	
	SGS	HCC/HCF4033	
	Solitron	CM4033	
	SSS	SCL4033	
CD4034	Fairchild	F4034	
	Motorola	MC14034	
	National	CD4034	
	SGS	HCC/HCF4034	
	Solitron	CM4034	
	SSS	SCL4034	
	Toshiba	TC4034	
◆CD4034A	Fairchild	F4034	
	Motorola	MC14034	
	National	CD4034	
	RCA	CD4034	
	SGS	HCC/HCF4034	
	Solitron	CM4034	
	SSS	SCL4034	
	Toshiba	TC4034	
CD4035	Fairchild	F4035	
	Motorola	MC14035	
			(Continued)
CD4035	SGS	HCC/HCF4035	
	Signetics	HEF4035	
	Solitron	CM4035	
	Toshiba	TC4035	
◆CD4035A	Fairchild	F4035	
	Motorola	MC14035	
	RCA	CD4035	
	SGS	HCC/HCF4035	
	Signetics	HEF4035	
	Solitron	CM4035	
	Toshiba	TC4035	
CD4036	Solitron	CM4036	
	Toshiba	TC4036	
CD4037	Solitron	CM4037	
CD4038	Motorola	MC14038	
	SGS	HCC/HCF4038	
	Solitron	CM4038	
	Toshiba	TC4038	
CD4039	Solitron	CM4039	
	Toshiba	TC4039	
CD4040	Fairchild	F4040	
	Motorola	MC14040	
	National	CD4040	
	SGS	HCC/HCF4040	
	Signetics	HEF4040	
	Solitron	CM4040	
	SSS	SCL4040	
	Toshiba	TC4040	
CD4041	Fairchild	F4041	
	National	CD4041	
	SGS	HCC/HCF4041	
	Signetics	HEF4041	
	Solitron	CM4041	
	SSS	SCL4041	
CD4042	Fairchild	F4042	
	Motorola	MC14042	
	National	CD4042	
	SGS	HCC/HCF4042	
	Signetics	HEF4042	
	Solitron	CM4042	
	SSS	SCL4042	
	Toshiba	TC4042	
CD4043	Motorola	MC14043	
	National	CD4043	
	SGS	HCC/HCF4043	
	Signetics	HEF4043	
	Solitron	CM4043	
	SSS	SCL4043	
	Toshiba	TC4043	
CD4044	Fairchild	F4044	
	Motorola	MC14044	
	National	CD4044	
	SGS	HCC/HCF4044	
	Signetics	HEF4044	
	Solitron	CM4044	
	Toshiba	TC4044	
CD4045	Fairchild	F4521	
	Motorola	MC14521	
	SGS	HCC/HCF4045	
	Signetics	HEF4521	
	Solitron	CM4045	
	SSS	SCL4445	
	Toshiba	TC4521	
◆CD4045A	Fairchild	F4521	
	Motorola	MC14521	
	RCA	CD4045	
	SGS	HCC/HCF4045	
	Signetics	HEF4521	
	Solitron	CM4045	
	SSS	SCL4445	
	Toshiba	TC4521	
CD4046	Fairchild	F4046	
	Motorola	MC14046	
	National	CD4046	
	SGS	HCC/HCF4046	
	Solitron	CM4046	
	SSS	SCL4046	
CD4047	Fairchild	F4047	
	National	CD4047	
	SGS	HCC/HCF4047	
	Signetics	HEF4047	
	Solitron	CM4047	
	SSS	SCL4047	
	Toshiba	TC4047	
CD4048	National	CD4048	
	SGS	HCC/HCF4048	
	Solitron	CM4048	
	SSS	SCL4402	
CD4049	Fairchild	F4049	
	Motorola	MC14049	
	National	CD4049	
	OKI	MSM4049	
			(Continued)
CD4049	Sanyo	LC4049	
	SGS	HCC/HCF4049	
	Signetics	HEF4049	
	Solitron	CM4049	
	SSS	SCL4049	
	Toshiba	TC4049	
CD4050	Fairchild	F4050	
	Motorola	MC14050	
	National	CD4050	
	SGS	HCC/HCF4050	
	Signetics	HEF4050	
	Solitron	CM4050	
	SSS	SCL4050	
	Toshiba	TC4050	
CD4051	Fairchild	F4051	
	Motorola	MC14051	
	National	CD4051	
	SGS	HCC/HCF4051	
	Signetics	HEF4051	
	Solitron	CM4051	
	SSS	SCL4051	
	Toshiba	TC4051	
CD4052	Fairchild	F4052	
	Motorola	MC14052	
	SGS	HCC/HCF4052	
	Signetics	HEF4052	
CD4053	Fairchild	F4053	
	Motorola	MC14053	
	National	CD4053	
	SGS	HCC/HCF4053	
	Signetics	HEF4053	
	Solitron	CM4053	
	SSS	SCL4053	
	Toshiba	**TC4053B**	**1363**
CD4054	SGS	HCC/HCF4054	
	Toshiba	TC4054	
CD4055	Mitel	MD4055	
	SGS	HCC/HCF4055	
	Toshiba	TC4055	
CD4057	Motorola	MC14581	
	National	74C181	
	RCA	CD40181	
	SGS	HCC/HCF40181	
	SSS	SCL4581	
CD4059	Motorola	MC14569	
	Signetics	HEF4059	
CD4060	Motorola	MC14060	
	National	CD4060	
	SGS	HCC/HCF4060	
	Signetics	HEF4060	
	SSS	SCL4060	
CD4062A	Motorola	MC14562B	
CD4063	SGS	HCC/HCF4063	
	Toshiba	TC4063	
CD4066	Fairchild	F4016	
		F4066	
	Motorola	MC14016	
		MC14066	
	National	CD4016	
		CD4066	
	RCA	CD4016	
	Sanyo	LC4016	
		LC4066	
	SGS	HCC/HCF4016	
		HCC/HCF4066	
	Signetics	HEF4016	
		HEF4066	
	Solitron	CM4016	
		CM4066	
		HCF4016	
	SSS	SCL4016	
		SCL4066	
	Toshiba	TC4016	
		TC4066	
CD4067	Fairchild	F4067	
	Motorola	MC14067	
	SGS	HCC/HCF4067	
	Signetics	HEF4067	
CD4068	Fairchild	F4068	
	Motorola	MC14068	
	SGS	HCC/HCF4068	
	Signetics	HEF4068	
	Solitron	CM4068	
	SSS	SCL4068	
	Toshiba	TC4068	
CD4069	Fairchild	F4069	
	Motorola	MC14069	
	National	CD4069	
		MM54C04	
		MM74C04	
	OKI	MSM4069	
	Sanyo	LC4069	
			(Continued)

◆ Discontinued

The manufacturers report their devices can be used as direct replacements.
Performance details often differ, so compare the specifications considering your requirements.

RCA Solid State Division (Cont'd)

Manufacturer Device	Replacement Source	Device	IC Master Page
CD4069	SGS	HCC/HCF4069	
	Signetics	HEF4069	
	Solitron	CM4069	
	SSS	SCL4069	
		SCL4449	
	Toshiba	TC4069	
CD4070	Fairchild	F4070	
	Motorola	MC14070	
	National	CD4070	
		MM74C86	
	SGS	HCC/HCF4070	
	Signetics	HEF4070	
	Solitron	CM4070	
	SSS	SCL4070	
CD4071	Fairchild	F4071	
	Motorola	MC14071	
	National	CD4071	
		MM74C32	
	OKI	MSM4071	
	Sanyo	LC4071	
	SGS	HCC/HCF4071	
	Signetics	HEF4071	
	Solitron	CM4071	
	SSS	SCL4071	
	Toshiba	TC4071	
CD4072	Fairchild	F4072	
	Motorola	MC14072	
	National	CD4072	
	SGS	HCC/HCF4072	
	Signetics	HEF4072	
	SSS	SCL4072	
	Toshiba	TC4072	
CD4073	Fairchild	F4073	
	Motorola	MC14073	
	National	CD4073	
	SGS	HCC/HCF4073	
	Signetics	HEF4073	
	Solitron	CM4073	
	SSS	SCL4073	
	Toshiba	TC4073	
CD4075	Fairchild	F4075	
	Motorola	MC14075	
	National	CD4075	
	SGS	HCC/HCF4075	
	Signetics	HEF4075	
	Solitron	CM4075	
	SSS	SCL4075	
	Toshiba	TC4075	
CD4076	Fairchild	F4076	
	Motorola	MC14076	
	National	CD4076	
		MM54C173	
		MM74C173	
	SGS	HCC/HCF4076	
	Signetics	HEF4076	
	Solitron	CM4076	
	SSS	SCL4076	
	Toshiba	TC4076	
CD4077	Fairchild	F4077	
	Motorola	MC14077	
	National	CD4077	
	SGS	HCC/HCF4077	
	Signetics	HEF4077	
	Solitron	CM4077	
	SSS	SCL4077	
CD4078	Fairchild	F4078	
	Motorola	MC14078	
	SGS	HCC/HCF4078	
	Signetics	HEF4078	
	Solitron	CM4078	
	SSS	SCL4078	
	Toshiba	TC4078	
CD4081	Fairchild	F4081	
	Motorola	MC14081	
	National	CD4081	
		MM74C08	
	OKI	MSM4081	
	Sanyo	LC4081	
	SGS	HCC/HCF4081	
	Signetics	HEF4081	
	Solitron	CM4081	
	SSS	SCL4081	
	Toshiba	TC4081	
CD4082	Fairchild	F4082	
	Motorola	MC14082	
	National	CD4082	
	SGS	HCC/HCF4082	
	Signetics	HEF4082	

(Continued)

Manufacturer Device	Replacement Source	Device	IC Master Page
CD4082	SSS	SCL4082	
	Toshiba	TC4082	
CD4085B	Motorola	MC14506B	
	National	CD4085B	
	SSS	SCL4085B	
CD4086B	Motorola	MC14506B	
	SGS	HCC/HCF4086	
	Signetics	HEF4086B	
	SSS	SCL4086B	
CD4089	National	CD4089	
	SGS	HCC/HCF4089	
CD4093B	Fairchild	F4093B	
	Motorola	MC14093B	
	National	CD4093B	
	SSS	SCL4093B	
CD4094B	Motorola	MC14094B	
	SSS	SCL4094B	
CD4095	SGS	HCC/HCF4095	
CD4096	SGS	HCC/HCF4096	
CD4097	Fairchild	F4097	
	Motorola	MC14097	
	SGS	HCC/HCF4097	
CD4098	Fairchild	F4528	
	Motorola	MC14528	
	National	CD4528	
		MM74C221	
	SGS	HCC/HCF4098	
	Signetics	HEF4528	
	SSS	SCL4528	
	Toshiba	TC4528	
CD4099B	Motorola	MC14099B	
	National	CD4099B	
	SSS	SCL4099B	
CD4502	Motorola	MC14502	
	SGS	HCC/HCF4502	
	Signetics	HEF4502	
	SSS	SCL4502	
CD4503	Fairchild	F40097B	
	Motorola	MC14503	
		MC14503B	
	National	CD4503	
	SGS	HCC/CFH4503	
CD4508	Motorola	MC14508	
	National	DM74147	
	SGS	HCC/HCF4508	
	Signetics	**74147**	1157
		HEF4508	
		N82147	
	Solitron	CM4508	
	SSS	SCL4508	
	TI	SN74147	
	Toshiba	TC4508	
CD4510	Fairchild	F4510	
	Motorola	MC14510	
	National	CD4510	
	SGS	HCC/HCF4510	
	Signetics	HEF4510	
	Solitron	CM4510	
	SSS	SCL4510	
	Toshiba	TC4510	
CD4511	Fairchild	F4511	
	Mitel	MD4511	
	MMI	4511	
	Motorola	MC14511	
	National	CD4511	
	NEC	μPD4511	
	SGS	HCC/HCF4511	
	Signetics	HEF4511	
	Solitron	CM4511	
	SSS	SCL4511	
	Toshiba	TC4511	
CD4512	Fairchild	F4512	
	Motorola	MC14512	
	National	CD4512	
	SGS	HCC/HCF4512	
	SSS	SCL4512	
	Toshiba	TC4512	
CD4514	Fairchild	F4514	
	Motorola	MC14514	
	National	CD4514	
	SGS	HCC/HCF4514	
	Signetics	HEF4514	
	Solitron	CM4514	
	SSS	SCL4514	
	Toshiba	TC4514	
CD4515	Fairchild	F4515	
	Motorola	MC14515	
	National	CD4515	
	SGS	HCC/HCF4515	
	Signetics	HEF4515	
	Solitron	CM4515	

(Continued)

Manufacturer Device	Replacement Source	Device	IC Master Page
CD4515	SSS	SCL4515	
	Toshiba	TC4515	
CD4516	Fairchild	F4516	
	Motorola	MC14516	
	National	CD4516	
	SGS	HCC/HCF4516	
	Signetics	HEF4516	
	Solitron	CM4516	
	SSS	SCL4516	
	Toshiba	TC4516	
CD4517	Motorola	MC14517	
	SGS	HCC/HCF4517	
	Signetics	HEF4517	
	SSS	SCL4517	
CD4518	Fairchild	F4518	
	Motorola	MC14518	
	National	CD4518	
	SGS	HCC/HCF4518	
	Signetics	HEF4518	
	Solitron	CM4518	
	SSS	SCL4518	
	Toshiba	TC4518	
CD4519	Hitachi	HD4519	
	Motorola	MC14519	
	National	CD4519	
	Signetics	HEF4519	
CD4520	Fairchild	F4520	
	Motorola	MC14520	
	National	CD4520	
	OKI	MSM4520	
	Sanyo	LC4520	
	SGS	HCC/HCF4520	
	Signetics	HEF4520	
	Solitron	CM4520	
	SSS	SCL4520	
	Toshiba	TC4520	
CD4522	Fairchild	F4522	
	Motorola	MC14522B	
	National	CD4522	
	SSS	SCL4522	
CD4527	Fairchild	F4527	
	Motorola	MC14527	
	National	CD4527	
	SGS	HCC/HCF4527	
	Signetics	HEF4527	
	SSS	SCL4527	
	Toshiba	TC4527	
CD4532	Fairchild	F4532	
	Motorola	MC14532	
	SGS	HCC/HCF4532	
	Signetics	HEF4532	
	SSS	SCL4532	
	Toshiba	TC4532	
CD4536	Motorola	MC14536	
CD4541	Motorola	MC14541B	
	Signetics	HEF4591	
CD4543	Fairchild	F4543	
	Motorola	MC14543	
		MC14543B	
	National	CD4543	
	Signetics	HEF4543	
	SSS	SCL4S43B	
	Toshiba	TC4543	
CD4555	Fairchild	F4555	
	Motorola	MC14555	
	SGS	HCC/HCF4555	
	Signetics	HEF4555	
	SSS	SCL4555	
	Toshiba	TC4555	
CD4556	Fairchild	F4556	
	Motorola	MC14556	
	SGS	HCC/HCF4556	
	Signetics	HEF4556	
	SSS	SCL4556	
	Toshiba	TC4556	
CD4585	Fairchild	F40085	
	Motorola	MC14585	
	National	MM74C85	
	SGS	HCC/HCF4585	
	Signetics	HEF4585	
	SSS	SCL4585	
	Toshiba	TC4585	
CD4724	Fairchild	F4724	
CD54HC00	**Motorola**	**MC54HC00**	1122
	National	MM54HC00	
	Signetics	54HC00	
	SSS	SS54HC00	
CD54HC02	**Motorola**	**MC54HC02**	1122
	National	MM54HC02	
	Signetics	54HC02	

Manufacturer Device	Replacement Source	Device	IC Master Page
CD54HC04	**Motorola**	**MC54HC04**	1124
	National	MM54HC04	
	Signetics	54HC04	
CD54HC08	**Motorola**	**MC54HC08**	1122
	National	MM54HC08	
	Signetics	54HC08	
	TI	**SN54HC08**	714
CD54HC10	**Motorola**	**MC54HC10**	1122
	National	MM54HC10	
	Signetics	54HC10	
	TI	**SN54HC10**	714
CD54HC107	**Motorola**	**MC54HC107**	1126
	National	MM54HC107	
	Signetics	54HC107	
	TI	**SN54HC107**	714
CD54HC109	**Motorola**	**MC54HC109**	1126
	National	MM54HC109	
	Signetics	54HC109	
	TI	**SN54HC109**	714
CD54HC11	**Motorola**	**MC54HC11**	1122
	National	MM54HC11	
	Signetics	54HC11	
	TI	**SN54HC11**	714
CD54HC112	**Motorola**	**MC54HC112**	1126
	National	MM54HC112	
	Signetics	54HC112	
	TI	**SN54HC112**	714
CD54HC123	Motorola	MC54HC123	
	National	MM54HC123	
	Signetics	54HC123	
CD54HC132	**Motorola**	**MC54HC132**	1125
	National	MM54HC132	
	Signetics	54HC132	
◆CD54HC133	**Motorola**	**MC54HC133**	1122
	National	MM54HC133	
	RCA	**CD74HC123**	1150
	Signetics	54HC133	
	TI	**SN54HC133**	714
CD54HC137	Motorola	MC54HC137	
	National	MM54HC137	
	SSS	SN54HC137	
		SS54HC137	
	TI	**SN54HC137**	714
CD54HC138	**Motorola**	**MC54HC138**	1130
	National	MM54HC138	
	Signetics	54HC138	
	SSS	SS54HC138	
	TI	**SN54HC138**	714
CD54HC139	**Motorola**	**MC54HC139**	1130
	National	MM54HC139	
	Signetics	54HC139	
	SSS	SS54HC139	
	TI	**SN54HC139**	714
CD54HC14	**Motorola**	**MC54HC14**	1125
	National	MM54HC14	
	Signetics	54HC14	
	TI	**SN54HC14**	714
CD54HC147	**Motorola**	**MC54HC147**	1131
	National	MM54HC147	
	Signetics	54HC147	
CD54HC151	**Motorola**	**MC54HC151**	1129
	National	MM54HC151	
	Signetics	54HC151	
	TI	**SN54HC151**	714
CD54HC153	**Motorola**	**MC54HC153**	1129
	National	MM54HC153	
	Signetics	54HC153	
	TI	**SN54HC153**	714
CD54HC154	**Motorola**	**MC54HC154**	1130
	National	MM54HC154	
	Signetics	54HC154	
CD54HC157	**Motorola**	**MC54HC157**	1129
	Signetics	54HC157	
	TI	**SN54HC157**	714
CD54HC158	**Motorola**	**MC54HC158**	1129
	National	MM54HC158	
	Signetics	54HC158	
	TI	**SN54HC158**	714
CD54HC160	**Motorola**	**MC54HC160**	1127
	National	MM54HC160	
	Signetics	54HC160	
	TI	**SN54HC160**	714
	Universal	US74HC160	
CD54HC161	**Motorola**	**MC54HC161**	1127
	National	MM54HC161	
	Signetics	54HC161	
	TI	**SN54HC161**	714
CD54HC162	**Motorola**	**MC54HC162**	1127
	National	MM54HC162	
	Signetics	54HC162	
	TI	**SN54HC162**	714

◆ Discontinued

Bold face device numbers indicate manufacturers data is provided in the IC Master on the pages noted.

RCA Solid State Division (Cont'd)

Manufacturer Device	Replacement Source	Device	IC Master Page
CD54HC163	Motorola	MC54HC163	1127
	National	MM54HC163	
	Signetics	54HC163	
	TI	SN54HC163	714
CD54HC164	Motorola	MC54HC164	1128
	National	MM54HC164	
	Signetics	54HC164	
	TI	SN54HC164	714
CD54HC165	Motorola	MC54HC165	1128
	National	MM54HC165	
	Signetics	54HC165	
	TI	SN54HC165	714
CD54HC166	Motorola	MC54HC166	
	Signetics	54HC166	
	TI	SN54HC166	714
CD54HC173	Motorola	MC54HC173	1126
	National	MM54HC173	
	Signetics	54HC173	
	TI	SN54HC173	714
CD54HC174	Motorola	MC54HC174	1126
	National	MM54HC174	
	Signetics	54HC174	
	TI	SN54HC174	714
CD54HC175	Motorola	MC54HC175	1126
	National	MM54HC175	
	Signetics	54HC175	
	TI	SN54HC175	714
CD54HC181	Motorola	MC54HC181	1132
CD54HC182	Motorola	MC54HC182	
CD54HC190	Motorola	MC54HC190	
CD54HC191	Signetics	54HC191	
	TI	SN54HC191	714
CD54HC192	Motorola	MC54HC192	1127
	National	MM54HC192	
	Signetics	54HC192	
	TI	SN54HC192	714
CD54HC193	Motorola	MC54HC193	1127
	National	MM54HC193	
	Signetics	54HC193	
	TI	SN54HC193	714
CD54HC194	Motorola	MC54HC194	1128
	National	MM54HC194	
	Signetics	54HC194	
	TI	SN54HC194	714
CD54HC195	Motorola	MC54HC195	1128
	National	MM54HC195	
	NEC	UPD23C1000	
	Signetics	54HC195	
	TI	SN54HC195	714
	VTI	VT231024	4265
CD54HC20	Motorola	MC54HC20	1122
	National	MM54HC20	
	Signetics	54HC20	
	TI	SN54HC20	714
CD54HC221	Motorola	MC54HC221	
	National	MM54HC221	
	Signetics	54HC221	
CD54HC237	Motorola	MC54HC237	
	National	MM54HC237	
	SSS	SN54HC237	
	TI	SN54HC237	714
CD54HC238	Signetics	54HC238	
	SSS	SS54HC238	
	TI	SN54HC238	714
CD54HC240	Mitel	MD54HC240	
	Motorola	MC54HC240	1124
	National	MM54HC240	
	Signetics	54HC240	
	SSS	SS54HC240	
	Supertex	SI54HC240	
	TI	SN54HC240	714
CD54HC241	Mitel	MD54HC241	
	Motorola	MC54HC241	1124
	National	MM54HC241	
	Signetics	54HC241	
	SSS	SS54HC241	
	Supertex	SI54HC241	
	TI	SN54HC241	714
CD54HC242	Motorola	MC54HC242	1124
	National	MM54HC242	
	Signetics	54HC242	
	TI	SN54HC242	714
CD54HC243	Motorola	MC54HC243	1124
	National	MM54HC243	
	Signetics	54HC243	
	TI	SN54HC243	714
CD54HC244	Mitel	MD54HC244	
	Motorola	MC54HC244	1124
	National	MM54HC244	
		(Continued)	
CD54HC244	Signetics	54HC244	
	SSS	SS54HC244	
	Supertex	SI54HC244	
	Telmos	TMD54HC244	
	TI	SN54HC244	714
CD54HC245	Motorola	MC54HC245	1124
	National	MM54HC245	
	Signetics	54HC245	
	SSS	SS54HC245	
	TI	SN54HC245	714
CD54HC251	Motorola	MC54HC251	1129
	National	MM54HC251	
	Signetics	54HC251	
	TI	SN54HC251	714
CD54HC253	Motorola	MC54HC253	1129
	National	MM54HC253	
	Signetics	54HC253	
	TI	SN54HC253	714
CD54HC257	Motorola	MC54HC257	1129
	National	MM54HC257	
	Signetics	54HC257	
	TI	SN54HC257	714
CD54HC259	Motorola	MC54HC259	1126
	National	MM54HC259	
	Signetics	54HC259	
	TI	SN54HC259	714
CD54HC266	Motorola	MC54HC266	1123
	National	MM54HC266	
	Signetics	54HC266	
	TI	SN54HC266	714
CD54HC27	Motorola	MC54HC27	1122
	National	MM54HC27	
	Signetics	54HC27	
	TI	SN54HC27	714
CD54HC273	CTI	54HC273	
	Motorola	MC54HC273	1126
	Signetics	54HC273	
	TI	SN54HC273	714
CD54HC280	Motorola	MC54HC280	1132
	National	MM54HC280	
	Signetics	54HC280	
	TI	SN54HC280	714
CD54HC283	Motorola	MC54HC283	1132
CD54HC297	Signetics	54HC297	
CD54HC299	Motorola	MC54HC299	1129
	National	MM54HC299	
	Signetics	54HC299	
CD54HC30	Motorola	MC54HC30	1122
	National	MM54HC30	
	Signetics	54HC30	
	TI	SN54HC30	714
CD54HC32	Motorola	MC54HC32	1122
	National	MM54HC32	
	Signetics	54HC32	
	TI	SN54HC32	714
CD54HC354	Motorola	MC54HC354	1130
	National	MM54HC354	
	Signetics	54HC354	
CD54HC356	Motorola	MC54HC356	1130
	National	MM54HC356	
	Signetics	54HC356	
CD54HC365	Motorola	MC54HC365	1124
	National	MM54HC365	
	Signetics	54HC365	
CD54HC366	Motorola	MC54HC366	1124
	National	MM54HC366	
	Signetics	54HC366	
	TI	SN54HC366	714
CD54HC367	Motorola	MC54HC367	1124
	National	MM54HC367	
	Signetics	54HC367	
	TI	SN54HC367	714
CD54HC368	Motorola	MC54HC368	1124
	National	MM54HC368	
	Signetics	54HC368	
	TI	SN54HC368	714
CD54HC373	Mitel	MD54HC373	
	Motorola	MC54HC373	1126
	National	MM54HC373	
	Signetics	54HC373	
	SSS	SS54HC373	
	Supertex	SI54HC373	
	TI	SN54HC373	714
CD54HC374	Mitel	MD54HC374	
	Motorola	MC54HC374	1126
	National	MM54HC374	
	Signetics	54HC374	
	SSS	SS54HC374	
	Supertex	SI54HC374	
	TI	SN54HC374	714
CD54HC377	Motorola	MC54HC377	
	Signetics	54HC377	
	TI	SN54HC377	714
CD54HC390	Motorola	MC54HC390	1127
	National	MM54HC390	
	Signetics	54HC390	
	TI	SN54HC390	714
CD54HC393	Motorola	MC54HC393	1127
	National	MM54GC393	
	Signetics	54HC393	
	TI	SN54HC393	714
CD54HC4002	Motorola	MC54HC4002	1123
	National	MM54HC4002	
	Signetics	54HC4002	
	TI	SN54HC4002	714
CD54HC40104	Signetics	54HC40104	
CD54HC40105	Signetics	54HC40105	
CD54HC4016	Motorola	MC54HC4016	1130
CD54HC4017	Motorola	MC54HC4017	1128
	National	MM54HC4017	
	Signetics	54HC4017	
CD54HC4020	Motorola	MC54HC4020	1128
	National	MM54HC4020	
	Signetics	54HC4020	
	TI	SN54HC4020	714
CD54HC4024	Motorola	MC54HC4024	
	Signetics	54HC4024	
	TI	SN54HC4024	714
CD54HC4040	Motorola	MC54HC4040	1128
	National	MM54HC4040	
	Signetics	54HC4040	
	TI	SN54HC4040	714
CD54HC4046	Motorola	MC54HC4046	
CD54HC4049	Motorola	MC54HC4049	1124
	National	MM54HC4049	
	Signetics	54HC4049	
CD54HC4050	Motorola	MC54HC4050	1124
	National	MM54HC4050	
	Signetics	54HC4050	
CD54HC4051	Motorola	MC54HC4051	1130
	Signetics	54HC4051	
CD54HC4052	Motorola	MC54HC4052	1130
	Signetics	54HC4052	
CD54HC4053	Motorola	MC54HC4053	1130
	Signetics	54HC4053	
CD54HC4060	Motorola	MC54HC4060	1128
	National	MM54HC4060	
	Signetics	54HC4060	
	TI	SN54HC4060	714
CD54HC4066	Motorola	MC54HC4066	1130
CD54HC4075	Motorola	MC54HC4075	1122
	National	MM54HC4075	
CD54HC42	Motorola	MC54HC42	1130
	National	MM54HC42	
	Signetics	54HC42	
	TI	SN54HC42	714
CD54HC4351	Motorola	MC54HC4351	
CD54HC4352	Motorola	MC54HC4352	
CD54HC4353	Motorola	MC54HC4353	
CD54HC4514	Motorola	MC54HC4514	1130
	National	MM54HC4514	
	Signetics	54HC4514	
CD54HC4520	Signetics	54HC4520	
CD54HC4538	Motorola	MC54HC4538	1131
	National	MM54HC4538	
	Signetics	54HC4538	
CD54HC4543	Motorola	MC54HC4543	1130
CD54HC533	Motorola	MC54HC533	1126
	National	MM54HC533	
	Signetics	54HC533	
	SSS	SS54HC533	
	TI	SN54HC533	714
CD54HC534	Motorola	MC54HC534	1127
	National	MM54HC534	
	Signetics	54HC534	
	SSS	SS54HC534	
	TI	SN54HC534	714
CD54HC540	Motorola	MC54HC540	1125
	SPI	SP54HC540	
	SSS	SS54HC540	
CD54HC541	Signetics	54HC541	
	SSS	SS54HC541	
	TI	SN54HC541	714
CD54HC563	National	MM54HC563	
	Signetics	54HC563	
	SSS	SS54HC563	
	TI	SN54HC563	714
CD54HC564	National	MM54HC564	
	Signetics	54HC564	
	SSS	SS54HC564	
CD54HC573	Motorola	MC54HC573	1126
	National	MM54HC573	
		(Continued)	
CD54HC573	Signetics	54HC573	
	SSS	SS54HC573	
CD54HC574	Motorola	MC54HC574	1127
	National	MM54HC574	
	Signetics	54HC574	
	SSS	SS54HC574	
	TI	SN54HC574	714
CD54HC640	Motorola	MC54HC640	1125
	National	MM54HC640	
	Signetics	54HC640	
	SSS	SS54HC640	
	TI	SN54HC640	714
CD54HC643	Motorola	MC54HC643	1125
	National	MM54HC643	
	Signetics	54HC643	
	TI	SN54HC643	714
◆CD54HC645	National	MM54HC645	
	Signetics	54HC645	
	SSS	SS54HC645	
	TI	SN54HC645	714
CD54HC646	Motorola	MC54HC646	1125
	National	MM54HC646	
	Signetics	54HC646	
	TI	SN54HC646	714
CD54HC648	Motorola	MC54HC648	1125
	National	MM54HC648	
	Signetics	54HC648	
	TI	SN54HC648	714
CD54HC670	Signetics	54HC670	
	TI	SN54HC670	714
CD54HC688	Motorola	MC54HC688	1131
	National	MM54HC688	
	Signetics	54HC688	
CD54HC73	Motorola	MC54HC73	1126
	National	MM54HC73	
	Nitron	NC74HCT42	
	Signetics	54HC73	
CD54HC74	Motorola	MC54HC74	1126
	National	MM54HC74	
	Signetics	54HC74	
	TI	SN54HC74	714
CD54HC75	Motorola	MC54HC75	1126
	National	MM54HC75	
	Signetics	54HC75	
	TI	SN54HC75	714
CD54HC85	Motorola	MC54HC85	1131
	National	MM54HC85	
	Signetics	54HC85	
CD54HC86	Motorola	MC54HC86	1123
	National	MM54HC86	
	Signetics	54HC86	
	TI	SN54HC86	714
CD54HCT00	Motorola	MC54HCT00	
	Signetics	54HCT00	
CD54HCT02	Signetics	54HCT02	
CD54HCT03	Motorola	MC54HCT03	
CD54HCT04	Motorola	MC54HCT04	
	Signetics	54HCT04	
CD54HCT08	Signetics	54HCT08	
CD54HCT10	Signetics	54HCT10	
CD54HCT107	Signetics	54HCT107	
CD54HCT109	Signetics	54HCT109	
CD54HCT11	Signetics	54HCT11	
CD54HCT112	Signetics	54HCT112	
CD54HCT123	Signetics	54HCT123	
CD54HCT125	Motorola	MC54HCT125	
CD54HCT126	Motorola	MC54HCT126	
CD54HCT132	Signetics	54HCT132	
◆CD54HCT133	Signetics	54HCT133	
CD54HCT137	CTI	54HCT137	
	Supertex	54HCT137	
	TI	SN54HCT137	714
CD54HCT139	CTI	54HCT139	
	IDT	IDT54HCT139	
	Mitel	MD54HCT139	
	SPI	SP54HCT139	
	Signetics	54HCT139	
	SSS	SS54HCT139	
CD54HCT14	Signetics	54HCT14	
CD54HCT147	Signetics	54HCT147	
CD54HCT151	Signetics	54HCT151	
CD54HCT153	Signetics	54HCT153	
CD54HCT154	Signetics	54HCT154	
CD54HCT157	Motorola	MC54HCT157	
	Signetics	54HCT157	
CD54HCT158	Motorola	MC54HCT158	
	Signetics	54HCT158	
CD54HCT160	Signetics	54HCT160	
CD54HCT161	Signetics	54HCT161	
CD54HCT162	Signetics	54HCT162	
CD54HCT163	Signetics	54HCT163	
CD54HCT164	Signetics	54HCT164	

◆ Discontinued

The manufacturers report their devices can be used as direct replacements.
Performance details often differ, so compare the specifications considering your requirements.

RCA Solid State Division (Cont'd)

Manufacturer Device	Replacement Source	Device	IC Master Page
CD54HCT165	Signetics	54HCT165	
CD54HCT166	Signetics	54HCT166	
CD54HCT173	Signetics	54HCT173	
CD54HCT174	Signetics	54HCT174	
CD54HCT175	Signetics	54HCT175	
CD54HCT191	Signetics	54HCT191	
CD54HCT192	Signetics	54HCT192	
CD54HCT193	Signetics	54HCT193	
CD54HCT194	Signetics	54HCT194	
CD54HCT195	Signetics	54HCT195	
CD54HCT20	Signetics	54HCT20	
CD54HCT221	Signetics	54HCT221	
CD54HCT237	CTI	54HCT237	
	Supertex	54HCT237	
	TI	**SN54HCT237**	714
CD54HCT238	CTI	54HCT238	
	Signetics	54HCT238	
	SSS	SS54HCT238	
	TI	**SN54HCT238**	714
CD54HCT240	CTI	54HCT240	
	Mitel	MD54HCT240	
	Motorola	MC54HCT240	
	National	MM54HCT240	
	SPI	SP54HCT240	
	Supertex	SI54HCT240	
	TI	**SN54HCT240**	714
CD54HCT241	CTI	54HCT241	
	Mitel	MD54HCT241	
	Motorola	MC54HCT241	
	National	MM54HCT241	
	SPI	SP54HCT241	
	Signetics	54HCT241	
	SSS	SS54HCT241	
	Supertex	SI54HCT241	
	TI	**SN54HCT241**	714
CD54HCT242	Signetics	54HCT242	
CD54HCT243	Signetics	54HCT243	
CD54HCT244	CTI	54HCT244	
	Mitel	MD54HCT244	
	Motorola	MC54HCT244	
	National	MM54HCT244	
	SPI	SP54HCT244	
	Signetics	54HCT244	
	SSS	SS54HCT244	
	Supertex	SI54HCT244	
	TI	**SN54HCT244**	714
CD54HCT245	CTI	54HCT245	
	Mitel	MD54HCT245	
	Motorola	MC54HCT245	
	SPI	SP54HCT245	
	Signetics	54HCT245	
	SSS	SS54HCT245	
	TI	**SN54HCT245**	714
CD54HCT251	Signetics	54HCT251	
CD54HCT253	Signetics	54HCT253	
CD54HCT257	Motorola	MC54HCT257	
	Signetics	54HCT257	
CD54HCT258	Motorola	MC54HCT258	
CD54HCT259	Signetics	54HCT259	
CD54HCT27	Signetics	54HCT27	
CD54HCT273	Signetics	54HCT273	
CD54HCT280	Signetics	54HCT280	
CD54HCT297	Signetics	54HCT297	
CD54HCT299	Signetics	54HCT299	
CD54HCT30	Signetics	54HCT30	
CD54HCT32	Signetics	54HCT32	
CD54HCT354	Signetics	54HCT354	
CD54HCT356	Signetics	54HCT356	
CD54HCT365	Signetics	54HCT365	
CD54HCT366	Signetics	54HCT366	
CD54HCT367	Signetics	54HCT367	
CD54HCT368	Signetics	54HCT368	
CD54HCT373	CTI	54HCT373	
	Mitel	MD54HCT343	
		MD54HCT373	
	Motorola	MC54HCT373	
	National	MM54HCT373	
	SPI	SP54HCT373	
	Signetics	54HCT373	
	SSS	SS54HCT373	
	Supertex	SI54HCT373	
	TI	**SN54HCT373**	714
CD54HCT374	CTI	54HCT374	
	Mitel	MD54HCT374	
	Motorola	MC54HCT374	
	National	MM54HCT374	
	SPI	SP54HCT374	
	SSS	SS54HCT374	
			(Continued)
CD54HCT374	Supertex	SI54HCT374	
	TI	**SN54HCT374**	714
CD54HCT377	Signetics	54HCT377	
CD54HCT390	Signetics	54HCT390	
CD54HCT393	Signetics	54HCT393	
CD54HCT4002	Signetics	54HCT4002	
CD54HCT40104	Signetics	54HCT40104	
CD54HCT40105	Signetics	54HCT40105	
CD54HCT4017	Signetics	54HCT4017	
CD54HCT4020	Signetics	54HCT4020	
CD54HCT4024	Signetics	54HCT4024	
CD54HCT4040	Signetics	54HCT4040	
CD54HCT4049	Signetics	54HCT4049	
CD54HCT4050	Signetics	54HCT4050	
CD54HCT4051	Signetics	54HCT4051	
CD54HCT4052	Signetics	54HCT4052	
CD54HCT4053	Signetics	54HCT4053	
CD54HCT4060	Signetics	54HCT4060	
CD54HCT42	Signetics	54HCT42	
CD54HCT4511	Signetics	54HCT4511	
CD54HCT4514	Signetics	54HCT4514	
CD54HCT4520	Signetics	54HCT4520	
CD54HCT4538	Signetics	54HCT4538	
CD54HCT533	CTI	54HCT533	
	Motorola	MC54HCT533	
	Signetics	54HCT533	
	SSS	SS54HCT533	
CD54HCT534	CTI	54HCT534	
	Motorola	MC54HCT534	
	SSS	SS54HCT534	
CD54HCT540	CTI	54HCT540	
	Mitel	MD54HCT540	
	Motorola	MC54HCT540	
	SPI	SP54HCT540	
	Signetics	54HCT540	
	SSS	SS54HCT540	
	TI	**SN54HCT540**	714
CD54HCT541	CTI	54HCT541	
	Mitel	MD54HCT541	
	Motorola	MC54HCT541	
	SPI	SP54HCT541	
	Signetics	54HCT541	
	SSS	SS54HCT541	
	TI	**SN54HCT541**	714
CD54HCT563	CTI	54HCT563	
	Signetics	54HCT563	
	SSS	SS54HCT563	
CD54HCT564	CTI	54HCT564	
	Signetics	54HCT564	
	SSS	SS54HCT564	
	Zytrex	ZX74HCT564-2	
CD54HCT573	CTI	54HCT573	
	Mitel	MD54HCT573	
	SPI	SP54HCT573	
	Signetics	54HCT573	
	SSS	SS54HCT573	
CD54HCT574	CTI	54HCT574	
	Mitel	MD54HCT574	
	SPI	SP54HCT574	
	Signetics	54HCT574	
	SSS	SS54HCT574	
CD54HCT640	Motorola	MC54HCT640	
	Signetics	54HCT640	
	SSS	SS54HCT640	
CD54HCT643	Motorola	MC54HCT643	
	Signetics	54HCT643	
◆CD54HCT645	Signetics	54HCT645	
	SSS	SS54HCT645	
CD54HCT646	Signetics	54HCT646	
CD54HCT648	Signetics	54HCT648	
CD54HCT670	Signetics	54HCT670	
CD54HCT688	Signetics	54HCT688	
CD54HCT73	Signetics	54HCT73	
CD54HCT74	Signetics	54HCT74	
CD54HCT75	Signetics	54HCT75	
◆CD54HCT76	Signetics	54HCT76	
CD54HCT85	Signetics	54HCT85	
CD54HCT86	Signetics	54HCT86	
CD54HCU04	Motorola	MC54HCU04	
	Signetics	54HCU04	
CD74HC00	Hitachi	HD74HC00	
	Motorola	**MC74HC00**	1122
	National	MM74HC00	
	SPI	SP74HC00	
	SGS	M74HC00	
	Signetics	**74HC00**	1156
	TI	SN74HC00	
	Toshiba	**TC40H000**	1363
	Universal	US74HC00	
CD74HC02	Hitachi	HD74HC02	
	Motorola	**MC74HC02**	1122
	National	MM74HC02	
			(Continued)
CD74HC02	SPI	SP74HC02	
	SGS	M74HC02	
	Signetics	**74HC02**	1156
	TI	SN74HC02	
	Toshiba	**TC40H002**	1363
	Universal	US74HC02	
CD74HC03	**Motorola**	**MC74HC03**	1122
	National	MM74HC03	
	SGS	M74HC03	
	TI	SN74HC03	
	Toshiba	**TC74HC03**	1363
	Universal	US74HC03	
CD74HC04	Hitachi	HD74HC04	
	Motorola	**MC74HC04**	1124
	National	MM74HC04	
	SPI	SP74HC04	
	SGS	M74HC04	
	TI	SN74HC04	
	Toshiba	**TC40H004**	1363
	Universal	US74HC04	
CD74HC08	Hitachi	HD74HC08	
	Motorola	**MC74HC08**	1122
	National	MM74HC08	
	SPI	SP74HC08	
	SGS	M74HC08	
	Signetics	**74HC08**	1156
	TI	SN74HC08	
	Universal	US74HC08	
CD74HC10	Hitachi	HD74HC10	
	Motorola	**MC74HC10**	1122
	National	MM74HC10	
	SPI	SP74HC10	
	SGS	M74HC10	
	Signetics	**74HC10**	1156
	SiliconG	SG75474	
	TI	SN74HC10	
	Toshiba	**TC40H010**	1363
	Universal	US74HC10	
CD74HC107	Hitachi	HD74HC107	
	Motorola	**MC74HC107**	1126
	National	MM74HC107	
	Nitron	NC74HC107	
	SPI	SP74HC107	
	SGS	M74HC107	
	Signetics	**74HC107**	1156
	TI	SN74HC107	
	Toshiba	**TC40H107**	1363
	Universal	US74HC107	
CD74HC109	Hitachi	HD74HC109	
		HD74HC14	
	Motorola	**MC74HC109**	1126
	National	MM74HC109	
	Nitron	NC74HC109	
	SPI	SP74HC109	
	SGS	M74HC109	
	Signetics	**74HC109**	1156
	TI	SN74HC109	
	Toshiba	**TC74HC109**	1363
	Universal	US74HC109	
CD74HC11	Hitachi	HD74HC11	
	Motorola	**MC74HC11**	1122
	National	MM74HC11	
	SPI	SP74HC11	
	SGS	M74HC11	
	Signetics	**74HC11**	1156
	TI	SN74HC11	
	Toshiba	**TC40H011**	1363
	Universal	US74HC11	
CD74HC112	Hitachi	HD74HC112	
	Motorola	**MC74HC112**	1126
	National	MM74HC112	
	SPI	SP74HC112N	
	SGS	M74HC112	
	Signetics	**74HC112**	1156
	TI	SN74HC112	
	Universal	US74HC112	
CD74HC123	**Motorola**	**MC54HC133**	1122
	National	MM54HC133	
	Signetics	54HC133	
	TI	**SN54HC133**	714
CD74HC132	Hitachi	HD74HC132	
	Motorola	**MC74HC132**	1125
	National	MM74HC132	
	SPI	SP74HC132	
	SGS	M74HC132	
	Signetics	**74HC132**	1157
	TI	SN74HC132	
	Universal	US74HC132	
CD74HC133	**Motorola**	**MC74HC133**	1122
	National	MM74HC133	
	SPI	SP74HC133	
	SGS	M74HC133	
			(Continued)
CD74HC133	Signetics	74HC133	
	TI	SN74HC133	
	Universal	US74HC133	
CD74HC138	Hitachi	HD74HC138	
	Motorola	**MC74HC138**	1130
	National	MM74HC138	
	Nitron	NC74HC138	
	SPI	SP74HC138	
	SGS	M74HC138	
	Signetics	**74HC138**	1157
	SSS	SS74HC138	
	TI	SN74HC138	
	Universal	US74HC138	
CD74HC139	Hitachi	HD74HC139	
	Motorola	**MC74HC139**	1130
	National	MM74HC139	
	Nitron	NC74HC139	
	SPI	SP74HC139	
	SGS	M74HC139	
	Signetics	**74HC139**	1157
	SSS	SS74HC139	
	TI	SN74HC139	
	Toshiba	**TC40H139**	1363
	Universal	US74HC139	
CD74HC14	**Motorola**	**MC74HC14**	1125
	National	MM74HC14	
	SPI	SP74HC14	
	SGS	M74HC14	
	Signetics	**74HC14**	1156
	TI	SN74HC14	
	Universal	US74HC14	
CD74HC147	Hitachi	HD74HC147	
	Motorola	**MC74HC147**	1131
	National	MM74HC147	
	SPI	SP74HC147	
	SGS	M74HC147	
	Signetics	**74HC147**	1157
	TI	SN74HC147	
	Universal	US74HC147	
CD74HC151	Hitachi	HD74HC151	
	Motorola	**MC74HC151**	1129
	National	MM74HC151	
	SPI	SP74HC151	
	SGS	M74HC151	
	Signetics	**74HC151**	1157
	TI	SN74HC151	
	Universal	US74HC151	
CD74HC153	Hitachi	HD74HC153	
	Motorola	**MC74HC153**	1129
	National	MM74HC153	
	SPI	SP74HC153	
	SGS	M74HC153	
	Signetics	**74HC153**	1157
	TI	SN74HC153	
	Toshiba	**TC40H153**	1363
	Universal	US74HC153	
CD74HC154	Hitachi	HD74HC154	
	Motorola	**MC74HC154**	1130
	National	MM74HC154	
	SGS	M74HC154	
	Signetics	**74HC154**	1157
	TI	SN74HC154	
	Universal	US74HC154	
CD74HC157	Hitachi	HD74HC157	
	Motorola	**MC74HC157**	1129
	National	MM74HC157	
	Nitron	NC74HC157	
	SPI	SP74HC157	
	SGS	M74HC157	
	Signetics	**74HC157**	1157
	TI	SN74HC157	
	Toshiba	**TC40H157**	1363
	Universal	US74HC157	
CD74HC158	Hitachi	HD74HC158	
	Motorola	**MC74HC158**	1129
	National	MM74HC158	
	SPI	SP74HC158	
	SGS	M74HC158	
	Signetics	**74HC158**	1157
	TI	SN74HC158	
	Toshiba	**TC40H158**	1363
	Universal	US74HC158	
CD74HC160	**Motorola**	**MC74HC160**	1127
	National	MM74HC160	
	SPI	SP74HC160	
	SGS	M74HC160	
	Signetics	**74HC160**	1157
	TI	SN74HC160	
	Universal	US74HC160	
CD74HC161	Hitachi	HD74HC161	
	Motorola	**MC74HC161**	1127
	National	MM74HC161	
			(Continued)

◆ Discontinued

Bold face device numbers indicate manufacturers data is provided in the IC Master on the pages noted.

ALTERNATE SOURCE DIRECTORY

RCA Solid State Division (Cont'd)

Manufacturer Device	Replacement Source	Device	IC Master Page
CD74HC161	SPI	SP74HC161	
	SGS	M74HC161	
	Signetics	**74HC161**	**1157**
	TI	SN74HC161	
	Universal	US74HC161	
CD74HC162	Hitachi	HD74HC162	
	Motorola	**MC74HC162**	**1127**
	National	MM74HC162	
	SPI	SP74HC162	
	SGS	M74HC162	
	Signetics	**74HC162**	**1157**
	TI	SN74HC162	
	Universal	US74HC162	
CD74HC163	Hitachi	HD74HC163	
	Motorola	**MC74HC163**	**1127**
	National	MM74HC163	
	SPI	SP74HC163	
	SGS	M74HC163	
	Signetics	**74HC163**	**1157**
	TI	SN74HC163	
	Universal	US74HC163	
CD74HC164	Hitachi	HD74HC164	
	Motorola	**MC74HC164**	**1128**
	National	MM74HC164	
	SPI	SP74HC164	
	SGS	M74HC164	
	Signetics	**74HC164**	**1157**
	TI	SN74HC164	
	Universal	US74HC164	
CD74HC165	Hitachi	HD74HC165	
	Motorola	**MC74HC165**	**1128**
	National	MM74HC165	
	SPI	SP74HC165	
	SGS	M74HC165	
	Signetics	**74HC165**	**1157**
	TI	SN74HC165	
	Universal	US74HC165	
CD74HC166	Motorola	MC74HC166	
	Nitron	NC74HC166	
	SGS	M74HC166	
	Signetics	**74HC166**	**1157**
	TI	SN74HC166	
	Universal	US74HC166	
CD74HC173	Hitachi	HD74HC173	
	Motorola	**MC74HC173**	**1126**
	National	MM74HC173	
	SPI	SP74HC173	
	SGS	M74HC173	
	Signetics	**74HC173**	**1157**
	TI	SN74HC173	
	Universal	US74HC173	
CD74HC174	Hitachi	HD74HC174	
	Motorola	**MC74HC174**	**1126**
	National	MM74HC174	
	Nitron	NC74HC174	
	SPI	SP74HC174	
	SGS	M74HC174	
	Signetics	74HC174	
	TI	SN74HC174	
	Toshiba	**TC40H174**	**1363**
	Universal	US74HC174	
CD74HC175	Hitachi	HD74HC175	
	Motorola	**MC74HC175**	**1126**
	National	MM74HC175	
	Nitron	NC74HC175	
	SPI	SP74HC175	
	SGS	M74HC175	
	Signetics	**74HC175**	**1157**
	TI	SN74HC175	
	Toshiba	**TC40H175**	**1363**
	Universal	US74HC175	
CD74HC190	Hitachi	HD74HC190	
	Motorola	MC74HC190	
	SGS	M74HC190	
	Signetics	PC74HC190	
		PCF74HC190	
	TI	SN74HC190	
	Toshiba	**TC74HC190**	**1363**
	Universal	US74HC190	
CD74HC191	Hitachi	HD74HC191	
	Nitron	NC74HC191	
	SGS	M74HC191	
	Signetics	**74HC191**	**1157**
	TI	SN74HC191	
	Universal	US74HC191	
CD74HC192	Hitachi	HD74HC192	
	Motorola	**MC74HC192**	**1127**
	National	MM74HC192	
	SPI	SP74HC192	

(Continued)

Manufacturer Device	Replacement Source	Device	IC Master Page
CD74HC192	SGS	M74HC192	
	Signetics	**74HC192**	**1157**
	TI	SN74HC192	
	Toshiba	**TC40H192**	**1363**
	Universal	US74HC192	
CD74HC193	Hitachi	HD74HC193	
	Motorola	**MC74HC193**	**1127**
	National	MM74HC193	
	SPI	SP74HC193	
	SGS	M74HC193	
	Signetics	**74HC193**	**1157**
	TI	SN74HC193	
	Toshiba	**TC40H193**	**1363**
	Universal	US74HC193	
CD74HC194	Hitachi	HD74HC194	
	Motorola	**MC74HC194**	**1128**
	National	MM74HC194	
	SPI	SP74HC194	
	SGS	M74HC194	
	Signetics	**74HC194**	**1157**
	TI	SN74HC194	
	Universal	US74HC194	
CD74HC195	Hitachi	HD74HC195	
	Motorola	**MC74HC195**	**1128**
	National	MM74HC195	
	SPI	SP74HC195	
	SGS	M74HC195	
	Signetics	**74HC195**	**1157**
	TI	SN74HC195	
	Universal	US74HC195	
CD74HC20	Hitachi	HD74HC20	
	Motorola	**MC74HC20**	**1122**
	National	MM74HC20	
	SPI	SP74HC20	
	SGS	M74HC20	
	Signetics	**74HC20**	**1156**
	TI	SN74HC20	
	Toshiba	**TC40H020**	**1363**
	Universal	US74HC20	
CD74HC221	Motorola	MC74HC221	
	National	MM74HC221	
	SGS	M74HC221	
	Signetics	74HC221	
	Universal	US74HC221	
CD74HC238	SPI	SP74HC238	
	SGS	M74HC238	
	Signetics	**74HC238**	**1157**
	SSS	SS74HC238	
	TI	SN74HC238	
CD74HC240	Hitachi	HD74HC240	
	Mitel	MD74HC240	
	Motorola	**MC74HC240**	**1124**
	National	MM74HC240	
	Nitron	NC74HC240	
	SPI	SP74HC240	
	SGS	M74HC240	
	Signetics	**74HC240**	**1157**
	SSS	SS74HC240	
	Supertex	SI74HC240	
	TI	SN74HC240	
	Toshiba	**TC40H240**	**1363**
	Universal	US74HC240	
	Zytrex	ZX74HC240	
CD74HC241	Hitachi	HD74HC241	
	Mitel	MD74HC241	
	Motorola	**MC74HC241**	**1124**
	National	MM74HC241	
	Nitron	NC74HC241	
	SPI	SP74HC241	
	SGS	M74HC241	
	Signetics	**74HC241**	**1157**
	SSS	SS74HC241	
	Supertex	SI74HC241	
	TI	SN74HC241	
	Universal	US74HC240	
	Zytrex	ZX74HC241	
CD74HC242	Hitachi	HD74HC242	
	Motorola	**MC74HC242**	**1124**
	National	MM74HC242	
	Nitron	NC74HC242	
	RCA	SGN	
	SPI	SP74HC242	
	SGS	M74HC242	
	Signetics	**74HC242**	**1158**
	TI	SN74HC242	
	Universal	US74HC242	
CD74HC243	Hitachi	HD74HC243	
	Motorola	**MC74HC243**	**1124**
		MC74HC245	**1124**
	National	MM74HC243	
	SPI	SP74HC243	
	SGS	M74HC243	

(Continued)

Manufacturer Device	Replacement Source	Device	IC Master Page
CD74HC243	SGS	M74HC245	
	Signetics	**74HC243**	**1158**
	TI	SN74HC243	
	Universal	US74HC243	
CD74HC244	Hitachi	HD74HC244	
	Mitel	MD74HC244	
	Motorola	**MC74HC244**	**1124**
	National	MM74HC244	
	Nitron	NC74HC244	
	SPI	SP74HC244	
	SGS	M74HC244	
	Signetics	**74HC244**	**1158**
	SSS	SS74HC244	
	Supertex	SI74HC244	
	TI	SN74HC244	
	Universal	US74HC244	
	Zytrex	ZX74HC244	
CD74HC245	Hitachi	HD74HC245	
	Motorola	**MC74HC245**	**1124**
	National	MM74HC245	
	Nitron	NC74HC245	
	Signetics	**74HC245**	**1158**
	SSS	SS74HC245	
	TI	SN74HC245	
	Universal	US74HC245	
CD74HC251	Hitachi	HD74HC251	
	Motorola	**MC74HC251**	**1129**
	National	MM74HC251	
	SPI	SP74HC251	
	SGS	M74HC251	
	Signetics	**74HC251**	**1158**
	TI	SN74HC251	
	Universal	US74HC251	
CD74HC253	Hitachi	HD74HC253	
	Motorola	**MC74HC253**	**1129**
	National	MM74HC253	
	SPI	SP74HC253	
	SGS	M74HC253	
	Signetics	**74HC253**	**1158**
	TI	SN74HC253	
	Universal	US74HC253	
CD74HC257	Hitachi	HD74HC257	
	Motorola	**MC74HC257**	**1129**
	National	MM74HC257	
	Nitron	NC74HC257	
	SPI	SP74HC257	
	SGS	M74HC257	
	Signetics	**74HC257**	**1158**
	TI	SN74HC257	
	Universal	US74HC257	
CD74HC259	Hitachi	HD74HC259	
	Motorola	**MC74HC259**	**1126**
	National	MM74HC259	
	SPI	SP74HC259	
	Signetics	**74HC259**	**1158**
	TI	SN74HC259	
	Universal	US74HC259	
CD74HC27	**Motorola**	**MC74HC27**	**1122**
	National	MM74HC27	
	SPI	SP74HC27	
	SGS	M74HC27	
	Signetics	**74HC27**	**1156**
	TI	SN74HC27	
	Toshiba	**TC40H027**	**1363**
	Universal	US74HC27	
CD74HC273	CTI	74HC273	
	Hitachi	HD74HC273	
	Motorola	**MC74HC273**	**1126**
	Nitron	NC74HC273	
	SPI	SP74HC273	
	SGS	M74HC273	
	Signetics	**74HC273**	**1158**
	TI	SN74HC273	
	Universal	US74HC273	
CD74HC280	Hitachi	HD74HC280	
	Motorola	**MC74HC280**	**1132**
	National	MM74HC280	
	SPI	SP74HC280	
	SGS	M74HC280	
	Signetics	**74HC280**	**1158**
	TI	SN74HC280	
CD74HC297	**Signetics**	**74HC297**	**1158**
CD74HC299	**Motorola**	**MC74HC299**	**1129**
	National	MM74HC299	
	SGS	M74HC299	
	Signetics	**74HC299**	**1158**
	Universal	US74HC299	
CD74HC30	Hitachi	HD74HC30	
	Motorola	**MC74HC30**	**1122**
	National	MM74HC30	
	SPI	SP74HC30	
	SGS	M74HC30	

(Continued)

Manufacturer Device	Replacement Source	Device	IC Master Page
CD74HC30	**Signetics**	**74HC30**	**1156**
	TI	SN74HC30	
	Universal	US74HC30	
CD74HC32	Hitachi	HD74HC27	
		HD74HC32	
	Motorola	**MC74HC32**	**1122**
	National	MM74HC32	
	SPI	SP74HC32	
	SGS	M74HC32	
	Signetics	**74HC32**	**1156**
	TI	SN74HC32	
	Toshiba	**TC40H032**	**1363**
	Universal	US74HC32	
CD74HC354	Hitachi	HD74HC354	
	Motorola	**MC74HC354**	**1130**
	National	MM74HC354	
	SGS	M74HC354	
	Signetics	**74HC354**	**1158**
	TI	SN74HC354	
	Universal	US74HC354	
CD74HC356	Hitachi	HD74HC356	
	Motorola	**MC74HC356**	**1130**
	National	MM74HC356	
	SGS	M74HC356	
	Signetics	**74HC356**	**1158**
	TI	SN74HC356	
	Universal	US74HC356	
CD74HC365	Hitachi	HD74HC365	
	Motorola	**MC74HC365**	**1124**
	National	MM74HC365	
	SPI	SP74HC365	
	SGS	M74HC365	
	TI	SN74HC365	
	Universal	US74HC365	
CD74HC366	Hitachi	HD74HC366	
	Motorola	**MC74HC366**	**1124**
	National	MM74HC366	
	SPI	SP74HC366	
	SGS	M74HC366	
	Signetics	**74HC366**	**1158**
	TI	SN74HC366	
	Universal	US74HC366	
CD74HC367	Hitachi	HD74HC367	
	Motorola	**MC74HC367**	**1124**
	National	MM74HC367	
	Nitron	NC74HC367	
	SPI	SP74HC367	
	SGS	M74HC367	
	Signetics	**74HC367**	**1158**
	TI	SN74HC367	
	Universal	US74HC367	
CD74HC368	Hitachi	HD74HC368	
	Motorola	**MC74HC368**	**1124**
	National	MM74HC368	
	SGS	M74HC368	
	Signetics	**74HC368**	**1158**
	TI	SN74HC368	
	Universal	US74HC368	
CD74HC373	Hitachi	HD74HC373	
	Mitel	MD74HC373	
	Motorola	**MC74HC373**	**1126**
	National	MM74HC373	
	Nitron	NC74HC373	
	SPI	SP74HC373	
	SGS	M74HC373	
	Signetics	**74HC373**	**1158**
	SSS	SS74HC373	
	Supertex	SI74HC373	
	TI	SN74HC373	
	Universal	US74HC373	
	Zytrex	ZX74HC373	
CD74HC374	Hitachi	HD74HC374	
	Mitel	MD74HC374	
	Motorola	**MC74HC374**	**1126**
	National	MM74HC374	
	Nitron	NC74HC374	
	SPI	SP74HC374	
	SGS	M74HC374	
	Signetics	**74HC374**	**1158**
	SSS	SS74HC374	
	TI	SN74HC374	
	Universal	US74HC374	
	Zytrex	ZX74HC374	
CD74HC377	Hitachi	HD74HC377	
	Motorola	MC74HC377	
	SGS	M74HC377	
	Signetics	**74HC377**	**1158**
	TI	SN74HC377	
	Universal	US74HC377	
CD74HC390	Hitachi	HD74HC390	
	Motorola	**MC74HC390**	**1127**
	National	MM74HC390	

(Continued)

◆ Discontinued

The manufacturers report their devices can be used as direct replacements.
Performance details often differ, so compare the specifications considering your requirements.

RCA Solid State Division (Cont'd)

Manufacturer Device	Replacement Source	Device	IC Master Page
CD74HC390	SPI	SP74HC390	
	SGS	M74HC390	
	Signetics	**74HC390**	1158
	TI	SN74HC390	
	Universal	US74HC390	
CD74HC393	Hitachi	HD74HC393	
	Motorola	**MC74HC393**	1127
	National	MM74HC393	
	Nitron	NC74HC393	
	SPI	SP74HC393	
	SGS	M74HC393	
	Signetics	**74HC393**	1158
	TI	SN74HC393	
	Universal	US74HC393	
CD74HC4002	**Motorola**	**MC74HC4002**	1123
	National	MM74HC4002	
	SPI	SP74HC4002	
	SGS	M74HC4002	
	Signetics	**74HC4002**	1160
	TI	SN74HC4002	
	Universal	US74HC4002	
CD74HC40104	**Signetics**	**74HC40104**	1161
CD74HC40105	**Signetics**	**74HC40105**	1161
CD74HC4016	**Motorola**	**MC74HC4016**	1130
	Universal	US74HC4016	
CD74HC4017	**Motorola**	**MC74HC4017**	1128
	National	MM74HC4017	
	SPI	SP74HC4017	
	SGS	M74HC4017	
	Signetics	**74HC4017**	1160
	TI	SN74HC4017	
	Universal	US74HC4017	
CD74HC4020	Hitachi	HD74HC4020	
	Motorola	**MC74HC4020**	1128
	National	MM74HC4020	
	SPI	SP74HC4020	
	SGS	M74HC4020	
	Signetics	**74HC4020**	1160
	TI	SN74HC4020	
	Universal	US74HC4020	
CD74HC4024	Hitachi	HD74HC4024	
	Motorola	MC74HC4024	
	SGS	M74HC4024	
	Signetics	**74HC4024**	1160
	TI	SN74HC4024	
	Universal	US74HC4024	
CD74HC4040	Hitachi	HD74HC4040	
	Motorola	**MC74HC4040**	1128
	National	MM74HC4040	
	SPI	SP74HC4040	
	SGS	M74HC4040	
	Signetics	**74HC4040**	1160
	TI	SN74HC4040	
	Universal	US74HC4040	
CD74HC4046	Motorola	MC74HC4046	
	Signetics	74HC4046	
CD74HC4049	**Motorola**	**MC74HC4049**	1124
	National	MM74HC4049	
	SGS	M74HC4049	
	Signetics	**74HC4049**	1160
	TI	SN74HC4049	
	Universal	US74HC4049	
CD74HC4050	Motorola	MC84HC4050	
	SGS	M74HC4050	
	Universal	US74HC4050	
CD74HC4051	**Motorola**	**MC74HC4051**	1130
	SGS	M74HC4051	
	Signetics	**74HC4051**	1160
	TI	SN74HC4051	
	Universal	US74HC4051	
CD74HC4052	**Motorola**	**MC74HC4052**	1130
	SGS	M74HC4052	
	Signetics	**74HC4052**	1160
	TI	SN74HC4052	
	Universal	US74HC4052	
CD74HC4053	**Motorola**	**MC74HC4053**	1130
	SGS	M74HC4053	
	Signetics	**74HC4053**	1160
	TI	SN74HC4053	
	Universal	US74HC4053	
CD74HC4060	**Motorola**	**MC74HC4060**	1128
	National	MM74HC4060	
	SGS	M74HC4060	
	Signetics	**74HC4060**	1160
	TI	SN74HC4060	
	Universal	US74HC4060	
CD74HC4066	**Motorola**	**MC74HC4066**	1130
CD74HC4067	Panasonic	MN74HC4067	
	Signetics	**74HC4067**	1160
CD74HC4075	AMD	AM2167	
	Cypress	CY7C167	
	Inmos	IMS1400	
	Motorola	**MC74HC4075**	1122
	Panasonic	MN74HC4075	
	SGS	M74HC4075	
	Signetics	PC74HC4075	
	Toshiba	**TC74HC4075**	1363
	Universal	US74HC4075	
CD74HC4094	Cypress	CY7C186	
	IDT	**IDT7164**	4055
	SGS	M74HC4094	
	Signetics	PC74HC4094	
CD74HC42	Hitachi	HD74HC42	
	Motorola	**MC74HC42**	1130
	National	MM74HC42	
	Nitron	NC74HC42	
	SPI	SP74HC42	
	SGS	M74HC42	
	Signetics	**74HC42**	1156
	TI	SN74HC42	
	Universal	US74HC42	
CD74HC423	Motorola	MC74HC423	
	SGS	M74HC423	
	Signetics	**74HC423**	1158
CD74HC4316	Motorola	MC74HC4316	
CD74HC4351	Motorola	MC74HCY351	
CD74HC4353	Motorola	MC74HC4353	
CD74HC4511	SGS	M74HC4511	
CD74HC4514	Hitachi	HD74HC4514	
	Motorola	**MC74HC4514**	1130
	National	MM74HC4514	
	SGS	M74HC4514	
	Signetics	**74HC4514**	1161
	TI	SN74HC4514	
	Universal	US74HC4514	
CD74HC4515	Cypress	CY7C187	
	Fairchild	F1600	
	Hitachi	HM6287	
		HM6787	4035
	Inmos	IMS1600	
	IDT	IDT7187	
	Motorola	MCM6287	
	NEC	MPD4361	
	SGS	M74HC4515	
	Signetics	PC74HC4515	
	Toshiba	TC5561	
		TC5562	
CD74HC4518	Cypress	CY7C171	
	IDT	IDT71681	
	SGS	M74HC4518	
	Signetics	PC74HC4518	
CD74HC4520	SGS	M74HC4520	
	Signetics	**74HC4520**	1161
CD74HC4538	**Motorola**	**MC74HC4538**	1131
	National	MM74HC4538	
	SGS	M74HC4538	
	Signetics	**74HC4538**	1161
	Universal	US74HC4538	
CD74HC4543	Cypress	CY7C172	
	IDT	IDT71682	
	Motorola	**MC74HC4543**	1130
	National	MM74HC4543	
	SGS	M74HC4543	
	Signetics	PC74HC4543	
	Toshiba	**TC74HC4543**	1363
	Universal	US74HC4543	
CD74HC533	Hitachi	HD74HC533	
	Motorola	**MC74HC533**	1126
	National	MM74HC533	
	SPI	SP74HC533	
	SGS	M74HC533	
	Signetics	**74HC533**	1159
	SSS	SS74HC533	
	TI	SN74HC533	
	Universal	US74HC533	
CD74HC534	Hitachi	HD74HC534	
	Motorola	**MC74HC534**	1127
	National	MM74HC534	
	SPI	SP74HC534	
	SGS	M74HC534	
	Signetics	**74HC534**	1159
	SSS	SS74HC534	
	TI	SN74HC534	
	Universal	US74HC534	
CD74HC540	Hitachi	HD74HC540	
	Motorola	**MC74HC540**	1125
	SGS	M74HC540	
	Signetics	**74HC540**	1159
	SSS	SS74HC540	
	TI	SN74HC540	
		(Continued)	
CD74HC540	**Toshiba**	**TC74HC540**	1363
	Universal	US74HC540	
CD74HC541	Hitachi	HD74HC541	
	Motorola	**MC74HC541**	1125
	SGS	M74HC541	
	Signetics	**74HC541**	1159
	SSS	SS74HC541	
	TI	SN74HC541	
	Universal	US74HC541	
CD74HC563	Hitachi	HD74HC563	
	Motorola	**MC74HC563**	1126
	National	MM74HC563	
	SPI	SP74HC563	
	SGS	M74HC563	
	Signetics	**74HC563**	1159
	SSS	SS74HC563	
	TI	SN74HC563	
	Universal	US74HC563	
CD74HC564	Hitachi	HD74HC564	
	Motorola	**MC74HC564**	1127
	National	MM74HC564	
	RCA	MC74HC564	
	SGS	M74HC564	
	Signetics	**74HC564**	1159
	SSS	SS74HC564	
	TI	SN74HC564	
	Universal	US74HC564	
CD74HC573	Hitachi	HD74HC573	
	Motorola	**MC74HC573**	1126
	National	MM74HC573	
	SPI	SP74HC573	
	SGS	M74HC573	
	Signetics	**74HC573**	1159
	SSS	SS74HC573	
	TI	SN74HC573	
	Toshiba	**TC74HC573**	1363
	Universal	US74HC573	
CD74HC574	Hitachi	HD74HC574	
	Motorola	**MC74HC574**	1127
	National	MM74HC574	
	SPI	SP74HC574	
	SGS	M74HC574	
	Signetics	**74HC574**	1159
	SSS	SS74HC574	
	TI	SN74HC574	
	Universal	US74HC574	
CD74HC640	Hitachi	HD74HC640	
	Motorola	**MC74HC640**	1125
	National	MM74HC640	
	Nitron	NC74HC640	
	Signetics	**74HC640**	1159
	SSS	SS74HC640	
	TI	SN74HC640	
	Universal	US74HC640	
CD74HC643	Hitachi	HD74HC643	
	Motorola	**MC74HC643**	1125
	National	MM74HC643	
	SGS	M74HC643	
	Signetics	**74HC643**	1159
	SSS	SS74HC643	
	TI	SN74HC643	
	Universal	US74HC643	
◆CD74HC645	National	MM74HC645	
	Signetics	74HC645	
	SSS	SS74HC645	
	TI	SN74HC645	
CD74HC646	Hitachi	HD74HC646	
	Motorola	**MC74HC646**	1125
	National	MM74HC646	
	Nitron	NC74HC646	
	SGS	M74HC646	
	Signetics	**74HC646**	1159
	TI	SN74HC646	
	Universal	US74HC646	
CD74HC648	Hitachi	HD74HC648	
	Motorola	**MC74HC648**	1125
	National	MM74HC648	
	SGS	M74HC648	
	Signetics	**74HC648**	1159
	TI	SN74HC648	
	Universal	US74HC648	
CD74HC670	SGS	M74HC670	
	Signetics	**74HC670**	1159
	TI	SN74HC670	
CD74HC688	**Motorola**	**MC74HC688**	1131
	National	MM74HC688	
	SGS	M74HC688	
	Signetics	74HC688	
	TI	SN74HC688	
	Toshiba	**TC74HC688**	1363
CD74HC73	Hitachi	HD74HC73	
	Motorola	**MC74HC73**	1126
		(Continued)	
CD74HC73	National	MM74HC73	
	SPI	SP74HC73	
	SGS	M74HC73	
	Signetics	**74HC73**	1156
	TI	SN74HC73	
	Toshiba	**TC74HC73**	1363
	Universal	US74HC73	
CD74HC74	Hitachi	HD74HC74	
	Motorola	**MC74HC74**	1126
	National	MM74HC74	
	Nitron	NC74HC74	
	SPI	SP74HC74	
	SGS	M74HC74	
	Signetics	**74HC74**	1156
	TI	SN74HC74	
	Toshiba	**TC40H074**	1363
	Universal	US74HC74	
CD74HC75	Hitachi	HD74HC75	
	Motorola	**MC74HC75**	1126
	National	MM74HC75	
	SPI	SP74HC75	
	SGS	M74HC75	
	Signetics	**74HC75**	1156
	TI	SN74HC75	
	Toshiba	**TC74HC75**	1363
	Universal	US74HC75	
CD74HC77	Hitachi	HD74HC77	
	National	MM74HC77	
	SPI	SP74HC77	
	TI	SN74HC77	
	Toshiba	**TC74HC77**	1363
CD74HC85	**Motorola**	**MC74HC85**	1131
	National	MM74HC85	
	SPI	SP74HC85	
	SGS	M74HC85	
	Signetics	**74HC85**	1156
	TI	SN74HC85	
	Universal	US74HC85	
CD74HC86	Hitachi	HD74HC86	
	Motorola	**MC74HC86**	1123
	National	MM74HC86	
	SPI	SP74HC86N	
	SGS	M74HC86	
	Signetics	**74HC86**	1156
	TI	SN74HC86	
	Universal	US74HC86	
CD74HCT00	**Signetics**	**74HCT00**	1156
	Universal	US74HCT00	
CD74HCT02	**Signetics**	**74HCT02**	1156
	Universal	US74HCT02	
CD74HCT04	Motorola	MC74HCT04	
	SGS	M74HCT04	
	Universal	US74HCT04	
CD74HCT08	**Signetics**	**74HCT08**	1156
	Universal	US74HCT08	
CD74HCT10	**Signetics**	**74HCT10**	1156
	Universal	US74HCT10	
CD74HCT107	Nitron	NC74HCT107	
	Signetics	**74HCT107**	1156
	Universal	US74HCT107	
CD74HCT109	Nitron	NC74HCT109	
	Signetics	**74HCT109**	1156
	Universal	US74HCT109	
CD74HCT11	**Signetics**	**74HCT11**	1156
	Universal	US74HCT11	
CD74HCT112	**Signetics**	**74HCT112**	1156
	Universal	US74HCT112	
CD74HCT123	**Signetics**	**74HCT123**	1157
	Universal	US74HCT123	
CD74HCT132	**Signetics**	**74HCT132**	1157
	Universal	US74HCT132	
◆CD74HCT133	Signetics	74HCT133	
CD74HCT138	CTI	74HCT138	
	IDT	IDT74HCT138	
	Mitel	MD74HCT138	
	Motorola	MC74HCT138	
	Nitron	NC74HCT138	
	Plessey	MV74HCT138	
	SPI	SP74HCT138	
	SGS	M74HCT138	
	Signetics	**74HCT138**	1157
	SSS	SS74HCT138	
	TI	SN74HCT138	
	Toshiba	**TC74HCT138**	1363
	Zytrex	ZX74HCT138-2	
CD74HCT139	CTI	74HCT139	
	Nitron	NC74HCT273	
	RCA	CD74HCT273	
	Signetics	**74HCT273**	1158
	SSS	SS74HCT139	
	Universal	US74HCT273	

◆ Discontinued

Bold face device numbers indicate manufacturers data is provided in the IC Master on the pages noted.

ALTERNATE SOURCE DIRECTORY

RCA Solid State Division (Cont'd)

Manufacturer Device	Replacement Source	Device	IC Master Page
CD74HCT14	**Signetics**	**74HCT14**	**1156**
	Universal	US74HCT14	
CD74HCT147	**Signetics**	**74HCT147**	**1157**
	Universal	US74HCT147	
CD74HCT151	**Signetics**	**74HCT151**	**1157**
	Universal	US74HCT151	
CD74HCT153	**Signetics**	**74HCT153**	**1157**
	Universal	US74HCT153	
CD74HCT154	**Signetics**	**74HCT154**	**1157**
	Universal	US74HCT154	
CD74HCT157	Motorola	MC74HCT157	
	Nitron	NC74HCT157	
	Signetics	**74HCT157**	**1157**
	Universal	US74HCT157	
CD74HCT158	Motorola	MC74HCT158	
	Signetics	**74HCT158**	**1157**
	Universal	US74HCT158	
CD74HCT160	National	MM74HCT160	
	Signetics	**74HCT160**	**1157**
	Universal	US74HCT160	
	Zytrex	ZX74HCT160-2	
CD74HCT161	**Signetics**	**74HCT161**	**1157**
	Universal	US74HCT161	
	Zytrex	ZX74HCT161-2	
CD74HCT162	**Signetics**	**74HCT162**	**1157**
	Universal	US74HCT162	
	Zytrex	ZX74HCT162-2	
CD74HCT163	**Signetics**	**74HCT163**	**1157**
	Universal	US74HCT163	
	Zytrex	ZX74HCT163-2	
CD74HCT164	**Signetics**	**74HCT164**	**1157**
	Universal	US74HCT164	
CD74HCT165	**Signetics**	**74HCT165**	**1157**
	Universal	US74HCT165	
CD74HCT166	Nitron	NC74HCT166	
	Signetics	**74HCT166**	**1157**
	Universal	US74HCT166	
CD74HCT173	**Signetics**	**74HCT173**	**1157**
	Universal	US74HCT173	
CD74HCT174	Nitron	NC74HCT174	
	Signetics	74HCT174	
	Universal	US74HCT174	
CD74HCT175	Nitron	NC74HCT175	
	Signetics	**74HCT175**	**1157**
	Universal	US74HCT175	
CD74HCT190	**Signetics**	**74HCT190**	**1157**
	Universal	US74HCT190	
CD74HCT191	Nitron	NC74HCT191	
	Signetics	**74HCT191**	**1157**
	Universal	US74HCT191	
CD74HCT192	**Signetics**	**74HCT192**	**1157**
	Universal	US74HCT192	
CD74HCT193	**Signetics**	**74HCT193**	**1157**
	Universal	US74HCT193	
CD74HCT194	**Signetics**	**74HCT194**	**1157**
	Universal	US74HCT194	
CD74HCT195	**Signetics**	**74HCT195**	**1157**
	Universal	US74HCT195	
CD74HCT20	**Signetics**	**74HCT20**	**1156**
	Universal	US74HCT20	
CD74HCT221	Signetics	74HCT221	
	Universal	US74HCT221	
CD74HCT238	CTI	74HCT238	
	Plessey	MV74HCT238	
	Signetics	**74HCT238**	**1157**
	SSS	SS74HCT238	
	TI	SN74HCT238	
CD74HCT240	CTI	74HCT240	
	Hitachi	HD74HCT240	
	Micrel	MIC74HCT240	
	MicroTech	74HCTR240	
	Mitel	MD74HCT240	
	Motorola	MC74HCT240	
	National	MM74HCT240	
	Nitron	NC74HCT240	
	Plessey	MV74HCT240	
	SPI	SP74HCT240	
	SGS	M74HCT240	
	Signetics	**74HCT240**	**1157**
	SSS	SS74HCT240	
	Supertex	SI74HCT240	
	TI	SN74HCT240	
	Toshiba	**TC74HCT240**	**1363**
	Universal	US74HCT240	
	Zytrex	ZX74HCT240-2	
CD74HCT241	CTI	74HCT241	
	Hitachi	HD74HCT241	
	Micrel	MIC74HCT241	
	MicroTech	74HCTR241	
CD74HCT241	Mitel	MD74HCT241	
	Motorola	MC74HCT241	
	National	MM74HCT241	
	Nitron	NC74HCT241	
	Plessey	MV74HCT241	
	SPI	SP74HCT241	
	SGS	M74HCT241	
	Signetics	**74HCT241**	**1157**
	SSS	SS74HCT241	
	Supertex	SI74HCT241	
	TI	SN74HCT241	
	Toshiba	**TC74HCT241**	**1363**
	Universal	US74HCT241	
	Zytrex	ZX74HCT241-2	
CD74HCT242	Hitachi	HD74HCT242	
	Micrel	MIC74HCT242	
	Nitron	NC74HCT242	
	Signetics	**74HCT242**	**1158**
	TI	SN74HCT242	
	Universal	US74HCT242	
CD74HCT243	Hitachi	HD74HCT243	
	Micrel	MIC74HCT243	
	Signetics	**74HCT243**	**1158**
	TI	SN74HCT243	
	Universal	US74HCT243	
CD74HCT244	CTI	74HCT244	
	Hitachi	HD74HCT244	
	Micrel	MIC74HCT244	
	MicroTech	74HCTR244	
	Mitel	MD74HCT244	
	Motorola	MC74HCT244	
	National	MM74HCT244	
	Nitron	NC74HCT244	
	Plessey	MV74HCT244	
	SPI	SP74HCT244	
	SGS	M74HCT244	
	Signetics	**74HCT244**	**1158**
	SSS	SS74HCT244	
	Supertex	SI74HCT244	
	TI	SN74HCT244	
	Toshiba	**TC74HCT244**	**1363**
	Universal	US74HCT244	
	Zytrex	ZX74HCT244-2	
CD74HCT245	CTI	74HCT245	
	GTEMicro	G74SC245	
	Hitachi	HD74HCT245	
	Micrel	MIC74HCT245	
	MicroTech	74HCTR245	
	Mitel	MD74HCT245	
	Motorola	MC74HCT245	
	National	MM74HCT245	
	Plessey	MV74HCT245	
		MV74SC245	
	SPI	SP74HCT245	
	SGS	M74HCT245	
	Signetics	**74HCT245**	**1158**
	SSS	SS74HCT245	
	TI	SN74HCT245	
	Toshiba	**TC74HCT245**	**1363**
	Universal	US74HCT245	
CD74HCT251	**Signetics**	**74HCT251**	**1158**
	Universal	US74HCT251	
CD74HCT253	**Signetics**	**74HCT253**	**1158**
	Universal	US74HCT253	
CD74HCT257	Motorola	MC74HCT257	
	Nitron	NC74HCT257	
	Signetics	**74HCT257**	**1158**
	Universal	US74HCT257	
CD74HCT258	Motorola	MC74HCT258	
CD74HCT259	**Signetics**	**74HCT259**	**1158**
	Universal	US74HCT259	
CD74HCT27	**Signetics**	**74HCT27**	**1156**
	Universal	US74HCT27	
CD74HCT273	CTI	74HCT139	
	Nitron	NC74HCT273	
	RCA	**CD74HCT139**	**1150**
	Signetics	**74HCT273**	**1158**
	SSS	SS74HCT139	
	Universal	US74HCT273	
CD74HCT280	**Signetics**	**74HCT280**	**1158**
CD74HCT297	**Signetics**	**74HCT297**	**1158**
CD74HCT299	**Signetics**	**74HCT299**	**1158**
	Universal	US74HCT299	
CD74HCT30	**Signetics**	**74HCT30**	**1156**
	Universal	US74HCT30	
		US74HCT32	
CD74HCT32	**Signetics**	**74HCT32**	**1156**
CD74HCT354	**Signetics**	**74HCT354**	**1158**
	Universal	US74HCT354	
CD74HCT356	**Signetics**	**74HCT356**	**1158**
	Universal	US74HCT356	
CD74HCT365	**Signetics**	**74HCT365**	**1158**
	Universal	US74HCT365	
CD74HCT366	**Signetics**	**74HCT366**	**1158**
	Universal	US74HCT366	
CD74HCT367	Nitron	NC74HCT367	
	Signetics	**74HCT367**	**1158**
	Universal	US74HCT367	
CD74HCT368	**Signetics**	**74HCT368**	**1158**
	Universal	US74HCT368	
CD74HCT373	CTI	74HCT373	
	GTEMicro	G74SC373	
	Hitachi	HD74HCT373	
	Micrel	MIC74HCT373	
	MicroTech	74HCTR373	
	Mitel	MD74HCT373	
	Motorola	MC74HCT373	
	National	MM74HCT373	
	Nitron	NC74HCT373	
	Plessey	MV74HCT373	
		MV74SC373	
	SPI	SP74HCT373	
	SGS	M74HCT373	
	Signetics	**74HCT373**	**1158**
	SSS	SS74HCT373	
	Supertex	SI74HCT373	
	TI	SN74HCT373	
	Toshiba	**TC74HCT373**	**1363**
	Universal	US74HCT373	
	Zytrex	ZX74HCT373-2	
CD74HCT374	CTI	74HCT374	
	GTEMicro	G74SC374	
	Hitachi	HD74HCT374	
	Micrel	MIC74HCT374	
	MicroTech	74HCTR374	
	Mitel	MD74HCT374	
	Motorola	MC74HCT374	
	National	MM74HCT374	
	Nitron	NC74HCT374	
	Plessey	MV74HCT374	
		MV74SC374	
	SPI	SP74HCT374	
	SGS	M74HCT374	
	Signetics	**74HCT374**	**1158**
	SSS	SS74HCT374	
	Supertex	SI74HCT374	
	TI	SN74HCT374	
	Toshiba	**TC74HCT374**	**1363**
	Universal	US74HCT374	
	Zytrex	ZX74HCT374-2	
CD74HCT377	**Signetics**	**74HCT377**	**1158**
	Universal	US74HCT377	
CD74HCT390	**Signetics**	**74HCT390**	**1158**
	Universal	US74HCT390	
CD74HCT393	Nitron	NC74HCT393	
	Signetics	PCF74HCT393	
	Universal	US74HCT393	
CD74HCT4002	**Signetics**	**74HCT4002**	**1160**
	Universal	US74HCT4002	
CD74HCT40104	**Signetics**	**74HCT40104**	**1161**
CD74HCT40105	**Signetics**	**74HCT40105**	**1161**
CD74HCT4017	**Signetics**	**74HCT4017**	**1160**
	Universal	US74HCT4017	
CD74HCT4020	**Signetics**	**74HCT4020**	**1160**
	Universal	US74HCT4020	
CD74HCT4024	**Signetics**	**74HCT4024**	**1160**
	Universal	US74HCT4024	
CD74HCT4040	**Signetics**	**74HCT4040**	**1160**
	Universal	US74HCT4040	
CD74HCT4049	Signetics	74HCT4049	
	Universal	US74HCT4049	
CD74HCT4050	Signetics	74HCT4050	
	Universal	US74HCT4050	
CD74HCT4051	**Signetics**	**74HCT4051**	**1160**
	Universal	US74HCT4051	
CD74HCT4052	**Signetics**	**74HCT4052**	**1160**
	Universal	US74HCT4052	
CD74HCT4053	**Signetics**	**74HCT4053**	**1160**
	Universal	US74HCT4053	
CD74HCT4060	**Signetics**	**74HCT4060**	**1160**
	Universal	US74HCT4060	
CD74HCT42	Nitron	NC74HCT42	
	Signetics	**74HCT42**	**1156**
	Universal	US74HCT42	
CD74HCT423	**Signetics**	**74HCT423**	**1158**
	Universal	US74HCT423	
CD74HCT4511	**Signetics**	**74HCT4511**	**1161**
	Universal	US74HCT4511	
CD74HCT4514	**Signetics**	**74HCT4514**	**1161**
	Universal	US74HCT4514	
CD74HCT4538	**Signetics**	**74HCT4538**	**1161**
	Universal	US74HCT4538	
CD74HCT4543	**Signetics**	**74HCT4543**	**1161**
	Universal	US74HCT4543	
		USHCT4543	
CD74HCT53	SPI	SP74HCT573	
	Zytrex	ZX74HCT573-2	
CD74HCT533	CTI	74HCT533	
	Hitachi	HD74HCT533	
	Micrel	MIC74HCT533	
	MicroTech	74HCTR533	
	Motorola	MC74HCT533	
	Plessey	MV74HCT533	
	Signetics	**74HCT533**	**1159**
	SSS	SS74HCT533	
	TI	SN74HCT533	
	Universal	US74HCT533	
	Zytrex	ZX74HCT533	
CD74HCT534	CTI	74HCT534	
	Hitachi	HD74HCT534	
	Micrel	MIC74HCT534	
	MicroTech	74HCTR534	
	Motorola	MC74HCT534	
	Plessey	MV74HCT534	
	Signetics	**74HCT534**	**1159**
	SSS	SS74HCT534	
	TI	SN74HCT534	
	Universal	US74HCT534	
	Zytrex	ZX74HCT534-2	
CD74HCT540	CTI	74HCT540	
	Hitachi	HD74HCT540	
	Micrel	MIC74HCT540	
	MicroTech	74HCTR540	
	Mitel	MD74HCT540	
	Motorola	MC74HCT540	
	Plessey	MV74HCT540	
	SPI	SP74HCT540	
	SGS	M74HCT540	
	Signetics	**74HCT540**	**1159**
	SSS	SS74HCT540	
	TI	SN74HCT540	
	Toshiba	**TC74HCT540**	**1363**
	Universal	US74HCT540	
	Zytrex	ZX74HCT540-2	
CD74HCT541	CTI	74HCT541	
	Hitachi	HD74HCT541	
	Micrel	MIC74HCT541	
	MicroTech	74HCTR541	
	Mitel	MD74HCT541	
	Motorola	MC74HCT541	
	Plessey	MV74HCT541	
	SPI	SP74HCT541	
	SGS	M74HCT541	
	Signetics	**74HCT541**	**1159**
	SSS	SS74HCT541	
	TI	SN74HCT541	
	Toshiba	**TC74HCT541**	**1363**
	Universal	US74HCT541	
	Zytrex	ZX74HCT541-2	
CD74HCT563	CTI	74HCT563	
	Hitachi	HD74HCT563	
	Micrel	MIC74HCT563	
	MicroTech	74HCTR563	
	Motorola	MC74HCT563	
	Plessey	MV74HCT563	
	SGS	M74HCT563	
	Signetics	**74HCT563**	**1159**
	SSS	SS74HCT563	
	TI	SN74HCT563	
	Toshiba	**TC74HCT563**	**1363**
	Universal	US74HCT563	
CD74HCT564	CTI	74HCT564	
	Hitachi	HD74HCT564	
	Micrel	MIC74HCT564	
	MicroTech	74HCTR564	
	Motorola	MC74HCT564	
	Plessey	MV74HCT564	
		MV74HCT573	
	SGS	M74HCT564	
	Signetics	**74HCT564**	**1159**
	SSS	SS74HCT564	
	TI	SN74HCT564	
	Toshiba	**TC74HCT564**	**1363**
	Universal	US74HCT564	
CD74HCT573	CTI	74HCT573	
	Hitachi	HD74HCT573	
	Micrel	MIC74HCT573	
	MicroTech	74HCTR573	
	Mitel	MD74HCT573	
	Motorola	MC74HCT573	
	SPI	SP74HCT573	
	SGS	M74HCT573	
	Signetics	**74HCT573**	**1159**
	SSS	SS74HCT573	

(Continued)

◆ Discontinued

The manufacturers report their devices can be used as direct replacements.
Performance details often differ, so compare the specifications considering your requirements.

RCA Solid State Division (Cont'd)

Manufacturer Device	Replacement Source	Device	IC Master Page
CD74HCT573	TI	SN74HCT573	
	Toshiba	TC74HCT573	
	Universal	US74HCT573	
CD74HCT574	CTI	74HCT574	
	Hitachi	HD74HCT574	
	MicroTech	74HCTR574	
	Mitel	MD74HCT574	
	Motorola	MC74HCT574	
	Plessey	MV74HCT574	
	SPI	SP74HCT574	
	SGS	M74HCT574	
	Signetics	**74HCT574**	**1159**
	SSS	SS74HCT574	
	TI	SN74HCT574	
	Toshiba	**TC74HCT574**	**1363**
	Universal	US74HCT574	
		US75HCT574	
CD74HCT640	Hitachi	HD74HCT640	
	MicroTech	74HCTR640	
	Motorola	MC74HCT640	
	Nitron	NC74HCT640	
	SGS	M74HCT640	
	Signetics	**74HCT640**	**1159**
	SSS	SS74HCT640	
	TI	SN74HCT640	
	Toshiba	**TC74HCT640**	**1363**
	Universal	US74HCT640	
	Zytrex	ZX74HCT640-2	
CD74HCT643	Hitachi	HD74HCT643	
	MicroTech	74HCTR643	
	Motorola	MC74HCT643	
	SGS	M74HCT643	
	Signetics	**74HCT643**	**1159**
	TI	SN74HCT643	
	Toshiba	**TC74HCT643**	**1363**
	Universal	US74HCT643	
	Zytrex	ZX74HCT643-2	
◆CD74HCT645	Signetics	74HCT645	
	SSS	SS74HCT645	
	TI	SN74HCT645	
CD74HCT646	Hitachi	HD74HCT646	
	Nitron	NC74HCT646	
	SGS	M74HCT646	
	Signetics	**74HCT646**	**1159**
	TI	SN74HCT646	
	Toshiba	**TC74HCT646**	**1363**
	Universal	US74HCT646	
CD74HCT648	Hitachi	HD74HCT648	
	SGS	M74HCT648	
	Signetics	**74HCT648**	**1159**
	TI	SN74HCT648	
	Toshiba	**TC74HCT648**	**1363**
	Universal	US74HCT648	
CD74HCT670	**Signetics**	**74HCT670**	**1159**
CD74HCT688	Signetics	74HCT688	
	Universal	US74HCT688	
CD74HCT73	**Signetics**	**74HCT73**	**1156**
	Universal	US74HCT73	
CD74HCT74	Nitron	NC74HCT74	
	Signetics	**74HCT74**	**1156**
	Universal	US74HCT74	
CD74HCT75	**Signetics**	**74HCT75**	**1156**
	Universal	US74HCT75	
◆CD74HCT76	Signetics	74HCT76	
	TI	SN74HC76	
	Universal	US74HCT76	
CD74HCT85	**Signetics**	**74HCT85**	**1156**
	Universal	US74HCT85	
CD74HCT86	**Signetics**	**74HCT86**	**1156**
	Universal	US74HCT86	
CD74HCU04	Motorola	MC74HCU04	
	SGS	M74HCU04	
	Signetics	74HCU04	
CDM5104	GouldAMI	6504	
	Harris	HM6504	
	Hitachi	4315	
		6147	
	Mitsubishi	58981	
	Motorola	6504	
	National	NMC6504	
	OKI	5104	
	Rockwell	R6504	
	Synertek	SY6504	
	Toshiba	TC5504	
CDM52356	AMD	AM92256	
	Fujitsu	MB83256	
	GI	R09256	
	GouldAMI	S23256	
		S38256	
CDM52356	GTEMicro	G53256	
	Hitachi	HN613256	
	Mitsubishi	M5M23256	
	Mostek	MK38000	
	Motorola	MCM63256	
		MCM65256	
	NCR	NCR23256	
		NCR23257	
	NEC	UPD23256	
		UPD23256A	
		UPD23C256E	
	OKI	**MSM38256**	**4733**
	Panasonic	MN23256	
		MN23257	
	RCA	**CDM53256**	**1673,1678**
	S-MOS	**SMM2326**	**4178**
		SMM6325	**4178**
		SMM6326	**4178**
	Signetics	23256	
		23256A	
	SSS	SCM23C256	
	Supertex	CM2560	
	Toshiba	**TMM23256**	**4263**
	UMC	UM23256	
	VTI	23257	
		VT23256	
		VT23257	
CDM53128	AMD	AM92128	
	GI	R09128	
		SPR-128	
	GouldAMI	S23128	
		S3630A	
	GTEMicro	G53128	
	Hitachi	HN613128	
		HN613128P	
	Mitsubishi	M5M23128	
	Motorola	MCM63128	
	NCR	NCR23128	
	NEC	UPD23128	
		UPD23128A	
		UPD23128E	
		UPD23C128	
		UPD23C128E	
	Rockwell	R23128	
	Signetics	23128	
	SSS	SCM23C128	
	Supertex	CM1310	
	Synertek	SY23128	
	Toshiba	TMM23128	
	UMC	UM23128	
	VTI	23131	
		VT23128	
		VT23129	
		VT23129A	
		VT23130	
		VT23138	
CDM53256	AMD	AM92256	
	Fujitsu	MB83256	
	GI	R09256	
	GouldAMI	S23256	
		S38256	
	GTEMicro	G53256	
	Hitachi	HN613256	
	Mitsubishi	M5M23256	
	Mostek	MK38000	
	Motorola	MCM63256	
		MCM65256	
	NCR	NCR23256	
		NCR23257	
	NEC	UPD23256	
		UPD23256A	
		UPD23C256E	
	OKI	**MSM38256**	**4733**
	Panasonic	MN23256	
		MN23257	
	RCA	CDM52356	
	S-MOS	**SMM2326**	**4178**
		SMM6325	**4178**
		SMM6326	**4178**
	Signetics	23256	
		23256A	
	SSS	SCM23C256	
	Supertex	CM2560	
	Toshiba	**TMM23256**	**4263**
	UMC	UM23256	
	VTI	23257	
		VT23256	
		VT23257	
CDM5332	Amperex	AM9233	
	CSG	MPS2333	
	Fairchild	F3533	
CDM5332	GI	R03-9333	
	GouldAMI	S2333	
	NEC	UPD23328	
	Signetics	2332	
	SSS	SCM23C33	
	Supertex	23C32	
	Synertek	SY2333	
	Toshiba	TMM2332	
	Universal	UM2333	
CDM5333	AMD	AM9232	
	CSG	MPS2332	
	Fairchild	F3532	
	GI	R03-9332	
	GouldAMI	S2333	
		S68A332	
	GTEMicro	G2332	
	Hitachi	HN46332	
	Intech	IM7332	
	Intel	2332	
	Mitsubishi	M58333	
	Motorola	**MCM68A332**	**4120**
	National	NM52132	
	NCR	NCR2332	
	NEC	UPD2332A	
	Panasonic	MN2332	
	Rockwell	R2332	
	SGS	M2332	
	Sharp	LH2332	
	Siemens	SA88332	
		SAB8332	
	Signetics	2332	
		2632A	
	SiliconG	SG3532	
	SSS	SCM23C32	
	SMC	ROM4732	
	Supertex	23SC32	
		CM3200	
	Synertek	SY2332	
	TI	TM2332	
		TMS2332	
		TMS4732	
	Toshiba	TMM2332	
		TMM333P	
	VTI	VT2332	
CDM5365	AMD	AM9265	
	Fairchild	F3568	
		F3569	
		F3570	
	GI	R03-9365	
		R09864	
	GouldAMI	S2364	
		S6364	
	GTEMicro	G5364	
	Hitachi	HN61364	
	Intel	2364A	
	Mitsubishi	M5M2364	
		M5M2365	
		M5M23C64	
	Mostek	MK37000	
	Motorola	MCM68369	
		MCM68370	
	National	MM52264	
		NM52264	
	OKI	**MSM3864**	**4733**
	Panasonic	MN2364	
		MN4864	
	Rockwell	R2364B	
	SSS	SCM23C65	
	Supertex	23SC64	
		23SC64/A	
		CM6400	
	Synertek	SY2365/A	
	TI	TMS2364	
		TMS4764	
	Toshiba	TMM2365	
	UMC	UM2366	
	VTI	VT2365	
CDM6116	Fujitsu	MB8416	
	Harris	HM65162	
	IDT	6116	
		IDT6116	
	Mitsubishi	5117	
	Mostek	MK6116	
	National	6116	
	NEC	µPD446	
	Nitron	NC6116	
	OKI	**MSM5128**	**4732,4733**
	S-MOS	SRM2016	
	Toshiba	**TC5517A**	**4263**
		TC5517B	
CDM6117	Fujitsu	MB8417	
	S-MOS	SRM2017	
	Toshiba	**TC5516A**	**4263**
CDM6118	Fujitsu	MB8418	
	Hitachi	HM6117	
	NEC	µPD449	
	S-MOS	SRM2018	
	Toshiba	TC5518B	
	UMC	UM2167	
CDM6264	AMD	AM9988	
		AM9988C	
	Cypress	CY7C186	
	Fujitsu	MB8464	
		MB8464A	
	Hitachi	HM6264	
		HM6464	
	IDT	IDT7188	
		IDT7M864	
	Mitsubishi	M5M5165	
	Motorola	MCM6164	
	NEC	µPD4364	
		µPD4464	
	OKI	MSM5164	
		MSM5165	
	S-MOS	SRM2064	
		SRM2264	**4177,4178**
	Sharp	LH5164	
	Toshiba	TC5564	
		TC5565	
		TMM2063	
		TMM2064	
	Samsung	KM6264	
CDP1802	Hughes	HCMP1802A	
◆CDP1822	GouldAMI	S5101	
		S6501	
	Harris	MH6501	
	Hitachi	HM435101	
	Intel	5101	
	Motorola	MCM5101	
		MCMS1L01	
	National	MM74C920	
	Panasonic	MNS101	
	RCA	**MWS5101**	**1673,1676**
	Sharp	LH5101	
	SSS	SCM5101	
	Synertek	SY2101	
	Toshiba	TC5501	
CDP1823	Hughes	HCMP1823	
CDP1824	Hughes	HCMP1824	
CDP1831	Hughes	HCMP1831	
CDP1832	Hughes	HCMP1832	
CDP1833	Hughes	HCMP1833	
CDP1834	Hughes	HCMP1834	
CDP1835	Hughes	HCMP1835	
CDP1837	Hughes	HCMP1837	
CDP1852	Hughes	HCMP1852	
CDP1853	Hughes	HCMP1853	
CDP1855	Hughes	HCMP1855	
CDP1856	Hughes	HCMP1856	
CDP1857	Hughes	HCMP1857	
CDP1858	Hughes	HCMP1858	
CDP1859	Hughes	HCMP1859	
CDP65564	Rockwell	R23C64	
CDP65C51	Motorola	MC1465HC51	
CDP6805	**Motorola**	**MC146805**	**1668**
CDP6818	Hitachi	HD146818	
	Motorola	**MC146818**	**1663**
CDP6823	**Motorola**	**MC146823**	**1663**
CDP6848	Motorola	MC6848	
CDP68HC05	Motorola	MC1468HC05	
CDP68HC68A	Motorola	MC1468HC68A	
CDP68HC68R	Motorola	MC1468HC68R	
CDP68HC68T	Motorola	MC1468HC68T	
CE74HC4066	**Motorola**	**MC74HC4066**	**1130**
	SGS	M74HC4066	
	Signetics	PC74HC4066	
	TI	SN74HC4075	
	Universal	US74HC4066	
LM211	AD	AD211	
	Motorola	**LM211**	**3631**
	National	LM211	
	Signetics	**LM211**	**3725**
	SiliconG	SG211	
	TI	LM211	
	ThomsonCSF	LM211	
LM301	AD	AD301	
	Fairchild	µA301A	
	Intersil	AD301	
	LinearTech	LM301	
		LM301A	

(Continued)

◆ Discontinued

Bold face device numbers indicate manufacturers data is provided in the IC Master on the pages noted.

RCA Solid State Division (Cont'd)

Manufacturer Device	Replacement Source	Device	IC Master Page
LM301	Motorola	LM301	
	National	LM301	
		LM301A	
	NEC	µPC157	
		µPC301	
	Raytheon	LM301	
	RCA	CA301	
	SiliconG	SG301	
	TI	LM301	
		LM301A	
	ThomsonCSF	LM301A	
	Toshiba	TA7506	
LM311	AD	AD311	
	Fairchild	µA311	
	LinearTech	LM311	
	Motorola	**LM2903**	**3631**
		LM311	**3631**
	National	LM2903	
		LM311	
	NEC	µPC271	
		µPC311	
	Raytheon	LM311	
	RCA	**CA311**	**3672,3677**
	SGS	LM2903	
		LM311	
	Signetics	**LM2903**	**3725**
		LM311	**3721**
	SiliconG	SG311	
	TI	LM2903	
		LM311	
	ThomsonCSF	LM2903	
		LM311	
		SFC3111	
LM339	AMD	LM339A	
	Fairchild	µA339	
	Hitachi	HA17901	
	Motorola	**LM339**	**3631**
	National	LM339	
	NEC	µPC339	
	PMI	CMP-04	
		PM339A	
	Raytheon	LM339	
	RCA	**CA339**	**3672,3677**
		CA339A	**3672,3677**
	SGS	LM339	
	TI	LM339	
	ThomsonCSF	LM339	
		TDB0139	
LM358	**Motorola**	**LM358**	**3617**
	National	LM358A	
	NEC	µPC358	
	RCA	**CA358A**	**3672**
	Sanyo	LA6358	
	SGS	LM358	
	Signetics	**LM358**	**3722,3729**
		NE532	**3729**
	TI	LM358	
	ThomsonCSF	LM358	
LM723	Fairchild	µA723	
	Hitachi	HA17723	
	Intersil	LM723	
	Motorola	**MC1723**	**3625**
	National	LM723	
	Raytheon	RC723	
		RM723	
	RCA	CA723	
	SGS	L123	
		LM723	
	Signetics	**µA723**	**3721,3730**
	SiliconG	SG723	
	TI	µA723	
	ThomsonCSF	LM723	
MC74HC564	Hitachi	HD74HC564	
	Motorola	**MC74HC564**	**1127**
	National	MM74HC564	
	RCA	**CD74HC564**	**1149**
	SGS	M74HC564	
	Signetics	**74HC564**	**1159**
	SSS	SS74HC564	
	TI	SN74HC564	
	Universal	US74HC564	
MWS5101	GouldAMI	S5101	
		S6501	
	Harris	MH6501	
	Hitachi	HM435101	
	Intel	5101	
	Motorola	MCM5101	
		MCMS1L01	
	National	MM74C920	
	Panasonic	MNS101	
	Sharp	LH5101	
	SSS	SCM5101	
	Synertek	SY2101	
	Toshiba	TC5501	
◆MWS5114	AMD	AM9114	
	Fairchild	F2114	
	Hitachi	HM472114	
	Intel	2114	
		2114A	
	Mitsubishi	M5L2114	
	Motorola	M5L2114	
		MCM2114	
		MCM21L14	
	National	NMC2114A	
	OKI	MSM2114	
	SSS	SCM2114A	
		SCM21C14	
	Synertek	SY2114	
	Toshiba	TMM2114A	
		TMM314A	
	UMC	UM2114	
MWS5514	Harris	HM6514	
	Hitachi	6148	
		HM4334	
	Mitsubishi	58981	
	Motorola	6514	
	NEC	444	
	OKI	5114	
	Rockwell	R6514	
	Synertek	SY6514	
	Toshiba	TC5514	
MWS6116A	AMD	AM9128	
		AM9218	
	Cypress	CY7C128	
	Fujitsu	MB8128	
		MB8416	
	Harris	HM6116	
		HM6516	
	IDT	IDT6116	
	Intel	2128	
	MicroPwr	MP6116	
	Mitsubishi	M58275	
		M5M116	
		M5M5116	
		M5M5117	
		M5M5118	
		MS8725	
	Motorola	MCM2016	
		MCM2016H	
		MCM2128	
		MCM6116	**4119**
		MCM61L16	**4119**
		MCM65116	
	National	MMC2116	
	NEC	µPD4016	
	OKI	MSM2128	
		MSM5128	**4732,4733**
	SSS	883C21C16	
		BCM21C16	
		SCM21C16	
		SCM6116	
	TI	TMS4016	
	ThomsonCSF	ET2128	
	Toshiba	**TC5516A**	**4263**
		TMM2015A	
		TMM2016	
		TMM2016A	**4263**
	Samsung	KM6816	
	UMC	UM2128	
	Universal	US574HC133	
PA50880	**LSILogic**	**LL5080**	**4676**
PA51400	**LSILogic**	**LL5140**	**4676**
	Motorola	**HCA6312**	**4718**
	National	SCX6312	
	Toshiba	**TC15G014**	**4799**
PA52200	**LSILogic**	**LL5220**	**4676**
	Motorola	**HCA6324**	**4718**
	National	SCX6324	
		SCX6325	
	Toshiba	**TC15G022**	**4799**
PA53200	**LSILogic**	**LL5320**	**4676**
	Toshiba	**TC15G032**	**4799**
PA54200	**LSILogic**	**LL5420**	**4676**
	Motorola	**HCA6348**	**4718**
	National	SCX6348	
	Toshiba	**TC15G042**	**4799**
PA56000	**LSILogic**	**LL5600**	**4676**
	Toshiba	**TC15G060**	**4799**
PAS0800	**LSILogic**	**LL5080**	**4676**
	Motorola	**HCA6306**	**4718**
	National	SCX6306	
	Toshiba	**TC15G008**	**4799**
RC4136	Fairchild	UA4136	
	MicroPwr	MPOP09	
	PMI	OP09	
RC4156	LinearTech	LT1013	
SGN	Hitachi	HD74HC242	
	Motorola	**MC74HC242**	**1124**
	National	MM74HC242	
	Nitron	NC74HC242	
	RCA	**CD74HC242**	**1149**
	SPI	SP74HC242	
	SGS	M74HC242	
	Signetics	**74HC242**	**1158**
	TI	SN74HC242	
	Universal	US74HC242	

Reticon

Manufacturer Device	Replacement Source	Device	IC Master Page
R5632	**GouldAMI**	**S35212**	**3582**
		S35212A	**3582**
	Mitel	S35212A	
	Sierra	SC11000	
		SC11005	

RIFA

Manufacturer Device	Replacement Source	Device	IC Master Page
MK5089	Plessey	MV5089	
PBD3523-11	Exar	XR2001	
		XR2001C	
		XR2201C	
	Mitsubishi	M54524	
	Motorola	**MC1411**	**3212**
		ULN2001	**3212**
	NEC	µPA2001	
	Sanyo	LB1231	
	SGS	L201	
		ULN2001	
	SiliconG	SG2001	
	Sprague	**ULN-2001**	**3269**
		ULQ-2001	
	TI	ULN2001A	
	Toshiba	TD62001	
		TD62101	
PBD3523-13	Exar	XR2003	
	Motorola	MC1413T	
	SiliconG	SG2023	
	Sprague	ULN-2023	
		ULQ-2003	
	TI	SN75468	
PBD352302	Exar	XR2204C	
	Mitsubishi	M54526	
	Motorola	**MC1416**	**3212**
		ULN2004	**3212**
	NEC	µPA2004	
	Sanyo	LB1234	
	SGS	L204	
		ULN2004	
	Signetics	NE5604	
		ULN2004	**3721**
	SiliconG	SG2004	
	Sprague	ULN-2004	
		ULS-2004	
	TI	ULN2004A	
	Toshiba	TD62004	
		TD62104	
PBD352303	Exar	XR2003C	
		XR2203C	
	Fairchild	MC1413	
	Mitsubishi	M54523	
	Motorola	**MC1413**	**3212**
		ULN2003	**3212**
	NEC	µPA2003	
	Sanyo	LB1233	
	SGS	L203	
		ULN2003	
	Signetics	NE5603	
		ULN2003	**3721**
	SiliconG	SG2003	
	Sprague	ULN-2003	
	Telefunken	TDA2003	
	TI	ULN2003A	
	Toshiba	TD62003	
		TD62103	
PBD352304	Exar	XR2002C	
		XR2202C	
	Fairchild	MC1412	
	Mitsubishi	M54525	
	Motorola	**MC1412**	**3212**
		ULN2002	**3212**
	NEC	µPA2002	
	Sanyo	LB1232	
PBD352304	SGS	L202	
		ULN2002	
	Signetics	NE5602	
	SiliconG	SG2002	
	Sprague	ULN-2002	
	TI	ULN2002A	
	Toshiba	TD62002	
PBD352311	Signetics	NE5501	
	Sprague	ULN-2021	
	TI	SN75466	
PBD352312	SiliconG	SG2024	
	Sprague	ULN-2024	
	TI	SN75469	
PBD3524-14	SiliconG	SG2002	
		SG2022	
	Sprague	ULN-2022	
		ULS-2002	
	TI	SN75467	
PBD353811	**Motorola**	**ULN2801**	**3212**
	SGS	ULN2801	
	Sprague	ULN-2801	
	Toshiba	TD62081	
PBD353812	**Motorola**	**ULN2804**	**3212**
	SGS	ULN2804	
	Sprague	ULN-2804	
	Toshiba	TD62084	
PBD353813	**Motorola**	**ULN2803**	**3212**
	SGS	ULN2803	
	Sprague	ULN-2803	
	Toshiba	TD62083	
PBD353814	**Motorola**	**ULN2802**	**3212**
	SGS	ULN2802	
	Sprague	ULN-2802	
	Toshiba	TD62082	
PBL3717	**Unitrode**	**UC3717**	**3741**
TBL3717	Plessey	TDA3717	

Rockwell Semiconductor Products

Manufacturer Device	Replacement Source	Device	IC Master Page
R23128	AMD	AM92128	
	GI	R09128	
		SPR-128	
	GouldAMI	S23128	
		S3630A	
	GTEMicro	G53128	
	Hitachi	HN613128	
		HN613128P	
	Mitsubishi	M5M23128	
	Motorola	MCM63128	
	NCR	NCR23128	
	NEC	UPD23128	
		UPD23128A	
		UPD23128E	
		UPD23C128	
		UPD23C128E	
	RCA	**CDM53128**	**1673,1677**
	Signetics	23128	
	SSS	SCM23C128	
	Supertex	CM1310	
	Synertek	SY23128	
	Toshiba	TMM23128	
	UMC	UM23128	
	VTI	23131	
		VT23128	
		VT23129	
		VT23129A	
		VT23130	
		VT23138	
R2332	AMD	AM9232	
	CSG	MPS2332	
	Fairchild	F3532	
	GI	R03-9332	
	GouldAMI	S2333	
		S68A332	
	GTEMicro	G2332	
	Hitachi	HN46332	
	Intech	IM7332	
	Intel	2332	
	Mitsubishi	M58333	
	Motorola	**MCM68A332**	**4120**
	National	NM52132	
	NCR	NCR2332	
	NEC	UPD2332A	
	Panasonic	MN2332	
	RCA	**CDM5333**	**1673,1677**
	SGS	M2332	
	Sharp	LH2332	
	Siemens	SA88332	
		SAB8332	

(Continued)

◆ Discontinued

The manufacturers report their devices can be used as direct replacements.
Performance details often differ, so compare the specifications considering your requirements.

Rockwell Semiconductor Products (Cont'd)

Manufacturer Device	Replacement Source	Device	IC Master Page
R2332	Signetics	2332	
		2632A	
	SiliconG	SG3532	
	SSS	SCM23C32	
	SMC	ROM4732	
	Supertex	23SC32	
		CM3200	
	Synertek	SY2332	
	TI	TM2332	
		TMS2332	
		TMS4732	
	Toshiba	TMM2332	
		TMM333P	
	VTI	VT2332	
R2364	AMD	AM9264	
	GouldAMI	S68364	
	Motorola	**MCM68364**	**4120**
		MCM68365	**4120**
		MCM68366	**4120**
	NCR	NCR2365	
	NEC	UPD2364E	
	Signetics	2364	
		2664	
	VTI	VT2365	
R2364A	AMD	9264	
	GI	R03-9364	
	GouldAMI	S68A364	
	Hitachi	HN48364	
	Intech	IM7364	
	MicroPwr	MP2364C	
	Mitsubishi	M58334	
	Mostek	MK36000	
	Motorola	**MCM68364**	**4120**
		MCM68365	**4120**
		MCM68366	**4120**
	National	MM52164	
	NEC	UPD2364	
	SGS	M2362	
		M36000	
	Signetics	2664	
		26S64	
	SSS	SCM23C64	
	SMC	ROM36000	
	Synertek	SY2364/A	
	TI	TMS4764	
	Toshiba	TMM2366	
R2364B	AMD	AM9265	
	Fairchild	F3568	
		F3569	
		F3570	
	GI	R03-9365	
		R09864	
	GouldAMI	S2364	
		S6364	
	GTEMicro	G5364	
	Hitachi	HN61364	
	Intel	2364A	
	Mitsubishi	M5M2364	
		M5M2365	
		M5M23C64	
	Mostek	MK37000	
	Motorola	MCM68369	
		MCM68370	
	National	MM52264	
		NM52264	
	OKI	**MSM3864**	**4733**
	Panasonic	MN2364	
		MN4864	
	RCA	**CDM5365**	**1673,1677**
	SSS	SCM23C65	
	Supertex	23SC64	
		23SC64/A	
		CM6400	
	Synertek	SY2365/A	
	TI	TMS2364	
		TMS4764	
	Toshiba	TMM2365	
	UMC	UM2366	
	VTI	VT2365	
R23C64	RCA	CDP65564	
R2764	AMD	AM2764	
	Fujitsu	MBM2764	
		MBM27C64	
	Hitachi	HM482764	
		HN2764	
		HN27C64	
		HN482764	
	Intel	2764	
R2764	Intel	2764A	
		27C64	**4078**
		87C64	**4078**
	Mitsubishi	M5L2764	
	NEC	UPD2764	
		UPD27C64	
	OKI	MSM2764	
		MSM2764A	**4732**
		MSM27C64	
	Rockwell	R27C64	
		R87C64	
	S-MOS	SPM27C64	
	SEEQ	2764	
		5133	
	SGS	M2764	
	Signetics	27C64	
	SSS	SCM27C64	
	TI	TMS27C64	
	ThomsonCSF	ET2764	
	Toshiba	**TMM2764**	**4263**
R27C32	AMD	AM2732	
	Hitachi	HN462732	
	Intel	2732	
		2732A	
		M2732	
	National	MM2732	
		NMC2732	
	SGS	M2732A	
	Toshiba	TMM324C	
R27C64	AMD	AM2764	
	Fujitsu	MBM2764	
		MBM27C64	
	Hitachi	HM482764	
		HN2764	
		HN27C64	
		HN482764	
	Intel	2764	
		2764A	
		27C64	**4078**
		87C64	**4078**
	Mitsubishi	M5L2764	
	NEC	UPD2764	
		UPD27C64	
	OKI	MSM2764	
		MSM2764A	**4732**
		MSM27C64	
	Rockwell	R2764	
		R87C64	
	S-MOS	SPM27C64	
	SEEQ	2764	
		5133	
	SGS	M2764	
	Signetics	27C64	
	SSS	SCM27C64	
	TI	TMS27C64	
	ThomsonCSF	ET2764	
	Toshiba	**TMM2764**	**4263**
R5213	National	NMC9716E	
R5213/2816	Samsung	KM2816	
R52B33	Fujitsu	UBM28C64	
	SEEQ	52B33	
R5516A/2816A	EXEL	XL2816A	
	Intel	2816A	
	SEEQ	2816A	
	Samsung	**KM2816A**	**4140**
R6500/1	**NCR**	**NCR6500/1**	**1671**
R6500/11	**NCR**	**NCR6500/11**	**1671**
R6500/1E	Rockwell	R6500/IEC	
R6500/IEC	Rockwell	R6500/1E	
R6503	Synertek	SY6503	
R6504	GouldAMI	6504	
	Harris	HM6504	
	Hitachi	4315	
		6147	
	Mitsubishi	58981	
	Motorola	6504	
	National	NMC6504	
	OKI	5104	
	RCA	CDM5104	
	Synertek	SY6504	
	Toshiba	TC5504	
R6505	Synertek	SY6505	
R6506	Synertek	SY5606	
R6514	Harris	HM6514	
	Hitachi	6148	
		HM4334	
	Mitsubishi	58981	
	Motorola	6514	
	NEC	444	
	OKI	5114	
	RCA	MWS5514	
R6514	Synertek	SY6514	
	Toshiba	TC5514	
R6515	Synertek	SYG515	
R6520	Motorola	MC6820	
R6530	Synertek	SY6530	
R6551	GouldAMI	S6551	
	National	6551	
	RCA	1822	
	Toshiba	5101	
R65C02	**GTEMicro**	**G65SC02**	**1615**
	NCR	**NCR65C02**	**1671**
R65C21	GTEMicro	G65SC21	
R65C51	GTEMicro	G65C51	
R65SC102	**GTEMicro**	**G65SC102**	**1615**
R65SC112	**GTEMicro**	**G65SC112**	**1615**
R6765	Intel	8272	
	NEC	UPD72066	
R68000	Hitachi	HD68000	
	Mostek	**MK68000**	**1647**
	Motorola	MC68000	
	Signetics	**SCN68000**	**1720**
	ThomsonCSF	EF68000	
R87C32	National	NMC27C32	
R87C64	AMD	AM2764	
	Fujitsu	MBM2764	
		MBM27C64	
	Hitachi	HM482764	
		HN2764	
		HN27C64	
		HN482764	
	Intel	2764	
		2764A	
		27C64	**4078**
		87C64	**4078**
	Mitsubishi	M5L2764	
	NEC	UPD2764	
		UPD27C64	
	OKI	MSM2764	
		MSM2764A	**4732**
		MSM27C64	
	Rockwell	R2764	
		R27C64	
	S-MOS	SPM27C64	
	SEEQ	2764	
		5133	
	SGS	M2764	
	Signetics	27C64	
	SSS	SCM27C64	
	TI	TMS27C64	
	ThomsonCSF	ET2764	
	Toshiba	**TMM2764**	**4263**

S MOS Systems

Manufacturer Device	Replacement Source	Device	IC Master Page
SLA6080	IMI	6080	
SLA6140	IMI	IMI6140	
SLA6170	IMI	IMI6170	
SLA6270	IMI	IMI6270	
SLA6330	IMI	IMI6330	
SLA6430	IMI	IMI6430	
SLA6620	IMI	IMI6620	
SMC82C51AC	AMD	8251	
	Intel	P8251	
	NEC	UPD8251A/AF	
	OKI	**MSM82C51A**	**4732**
	Toshiba	TMP8251	
SMC82C54AC	**Harris**	**82C54**	**682,1619,1620,1631**
		CP82C54	
	Intel	8254	
		82C54	
	NEC	UPD71054	
	Nitron	NC82C54	
	OKI	82C54	
SMC82C55AC	Harris	82C55	
		CP82C55A	
	Intel	8255	
		82C55	
		P8255	
	NEC	UPD71055	
		UPD8255A	
	OKI	82C55	
		MSM82C55A	**4732**
	Toshiba	TMP8255	
		TMP82C55	**1750**
SMC82C59AC	AMD	D8259	
	Fujitsu	MBL8259	
	Harris	**82C59A**	**682,1619,1621,1631**
		CP82C59A	
	Intel	8259	
		82C59A	
SMC82C59AC	National	INS8259	
	NEC	UPD8259A/A-2	
	Nitron	NC82C59A	
	OKI	**MSM82C59A**	**4732**
	Toshiba	TMP8259	
SMM2325	GouldAMI	S23256	
	RCA	CDM52356	
SMM2326	AMD	AM92256	
	Fujitsu	MB83256	
	GI	R09256	
	GouldAMI	S23256	
		S38256	
	GTEMicro	G53256	
	Hitachi	HN613256	
	Mitsubishi	M5M23256	
	Mostek	MK38000	
	Motorola	MCM63256	
		MCM65256	
	NCR	NCR23256	
		NCR23257	
	NEC	UPD23256	
		UPD23256A	
		UPD23C256E	
	OKI	**MSM38256**	**4733**
	Panasonic	MN23256	
		MN23257	
	RCA	CDM52356	
		CDM53256	**1673,1678**
	S-MOS	**SMM6325**	**4178**
		SMM6326	**4178**
	Signetics	23256	
		23256A	
	SSS	SCM23C256	
	Supertex	CM2560	
	Toshiba	**TMM23256**	**4263**
	UMC	UM23256	
	VTI	23257	
		VT23256	
		VT23257	
SMM2364	AMD	AM9264	
	GouldAMI	S2364	
		S68A364	
	Hitachi	HN48364	
	Motorola	**MCM68364**	**4120**
	NCR	NCR2364	
	OKI	**MSM3864**	**4733**
	Plessey	SL2364C	
	Sharp	LH2364A	
	Signetics	2364	
	Synertek	SYM2364	
	TI	TMS2364	
		TMS4764	
	Toshiba	TMM2364	
	VTI	VT2364	
	Weitek	SC8164	
SMM2365	Hitachi	HN61364	
	Toshiba	**TC5364**	**4263**
SMM6325	AMD	AM92256	
	Fujitsu	MB83256	
	GI	R09256	
	GouldAMI	S23256	
		S38256	
	GTEMicro	G53256	
	Hitachi	HN613256	
	Mitsubishi	M5M23256	
	Mostek	MK38000	
	Motorola	MCM63256	
		MCM65256	
	NCR	NCR23256	
		NCR23257	
	NEC	UPD23256	
		UPD23256A	
		UPD23C256E	
	OKI	**MSM38256**	**4733**
	Panasonic	MN23256	
		MN23257	
	RCA	CDM52356	
		CDM53256	**1673,1678**
	S-MOS	**SMM2326**	**4178**
		SMM6326	**4178**
	Signetics	23256	
		23256A	
	SSS	SCM23C256	
	Supertex	CM2560	
	Toshiba	**TMM23256**	**4263**
	UMC	UM23256	
	VTI	23257	
		VT23256	
		VT23257	

(Continued)

◆ Discontinued

Bold face device numbers indicate manufacturers data is provided in the IC Master on the pages noted.

ALTERNATE SOURCE DIRECTORY

S MOS Systems (Cont'd)

Manufacturer Device	Replacement Source	Device	IC Master Page
SMM6326	AMD	AM92256	
	Fujitsu	MB83256	
	GI	R09256	
	GouldAMI	S23256	
		S38256	
	GTEMicro	G53256	
	Hitachi	HN613256	
	Mitsubishi	M5M23256	
	Mostek	MK38000	
	Motorola	MCM63256	
		MCM65256	
	NCR	NCR23256	
		NCR23257	
	NEC	UPD23256	
		UPD23256A	
		UPD23C256E	
	OKI	**MSM38256**	**4733**
	Panasonic	MN23256	
		MN23257	
	RCA	CDM52356	
		CDM53256	**1673,1678**
	S-MOS	**SMM2326**	**4178**
		SMM6325	**4178**
	Signetics	23256	
		23256A	
	SSS	SCM23C256	
	Supertex	CM2560	
	Toshiba	**TMM23256**	**4263**
	UMC	UM23256	
	VTI	23257	
		VT23256	
		VT23257	
SPM27C64	AMD	AM2764	
	Fujitsu	MBM2764	
		MBM27C64	
	Hitachi	HM482764	
		HN2764	
		HN27C64	
		HN482764	
	Intel	2764	
		2764A	
		27C64	**4078**
		87C64	**4078**
	Mitsubishi	M5L2764	
	NEC	UPD2764	
		UPD27C64	
	OKI	MSM2764	
		MSM2764A	**4732**
		MSM27C64	
	Rockwell	R2764	
		R27C64	
		R87C64	
	SEEQ	2764	
		5133	
	SGS	M2764	
	Signetics	27C64	
	SSS	SCM27C64	
	TI	TMS27C64	
	ThomsonCSF	ET2764	
	Toshiba	**TMM2764**	**4263**
SRM2016	Fujitsu	MB8416	
	Harris	HM65162	
	IDT	6116	
		IDT6116	
	Mitsubishi	5117	
	Mostek	MK6116	
	National	6116	
	NEC	μPD446	
	Nitron	NC6116	
	OKI	**MSM5128**	**4732,4733**
	RCA	CDM6116	
	Toshiba	**TC5517A**	**4263**
		TC5517B	
SRM2017	Fujitsu	MB8417	
	RCA	CDM6117	
	Toshiba	**TC5516A**	**4263**
SRM2018	Fujitsu	MB8418	
	Hitachi	HM6117	
	NEC	μPD449	
	RCA	CDM6118	
	Toshiba	TC5518B	
	UMC	UM2167	
SRM2064	AMD	AM9988	
		AM9988C	
	Cypress	CY7C186	
	Fujitsu	MB8464	
		MB8464A	
	Hitachi	HM6264	
SRM2064	Hitachi	HM6464	
	IDT	IDT7188	
		IDT7M864	
	Mitsubishi	M5M5165	
	Motorola	MCM6164	
	NEC	μPD4364	
		μPD4464	
	OKI	MSM5164	
		MSM5165	
	RCA	CDM6264	
	S-MOS	**SRM2264**	**4177.4178**
	Sharp	LH5164	
	Toshiba	TC5564	
		TC5565	
		TMM2063	
		TMM2064	
	Samsung	KM6264	
SRM2264	AMD	AM9988	
		AM9988C	
	Cypress	CY7C186	
	Fujitsu	MB8464	
		MB8464A	
	Hitachi	HM6264	
		HM6464	
	IDT	IDT7188	
		IDT7M864	
	Mitsubishi	M5M5165	
	Motorola	MCM6164	
	NEC	μPD4364	
		μPD4464	
	OKI	MSM5164	
		MSM5165	
	RCA	CDM6264	
	S-MOS	SRM2064	
	Sharp	LH5164	
	Toshiba	TC5564	
		TC5565	
		TMM2063	
		TMM2064	
	Samsung	KM6264	
◆SRM6504	GouldAMI	6504	
	Harris	HM6504	
	Hitachi	4315	
		6147	
	Mitsubishi	58981	
	Motorola	6504	
	National	NMC6504	
	OKI	5104	
	RCA	CDM5104	
	Rockwell	R6504	
	Synertek	SY6504	
	Toshiba	TC5504	
STC2560C	GouldAMI	S2560A	
	SGS	M2560A	

Samsung Semiconductor

Manufacturer Device	Replacement Source	Device	IC Master Page
KM1256	AMD	MCM6256	
	AT&T	WCM41256	
	Fujitsu	MB81256	
	Hitachi	HM50256	
		HM50257	
	MicronTech	MT1256	
	Mitsubishi	M5M4256	
		MSM4257	
	Motorola	MCM6256	
		MCM6257	
	NEC	MPD41257	
		μPD41256	
	OKI	M5M37256	
		MSM37256	
		MSM41256	
	Panasonic	MM41256	
	TI	TMS4257	
	Toshiba	TMM41256	
KM2816	Rockwell	R5213/2816	
KM2816A	EXEL	XL2816A	
	Intel	2816A	
	Rockwell	R5516A/2816A	
	SEEQ	2816A	
KM2817A	EXEL	XL2817A	
	Intel	2817A	
	SEEQ	2817A	
KM4164	Fairchild	F64K	
	Fujitsu	MB8264A	
		MB8266A	
	Hitachi	HM4864	
	Inmos	IMS2600	
	MicronTech	MT4264	
	Motorola	MCM4164B	
		MCM6665B	
KM4164	National	NMC4164	
	NEC	μPD4164	
	OKI	MSM3764	
	ThomsonCSF	ET4164	
	Toshiba	TMM4164	
KM6264	AMD	AM9988	
		AM9988C	
	Cypress	CY7C186	
	Fujitsu	MB8464	
		MB8464A	
	Hitachi	HM6264	
		HM6464	
	IDT	IDT7188	
		IDT7M864	
	Mitsubishi	M5M5165	
	Motorola	MCM6164	
	NEC	μPD4364	
		μPD4464	
	OKI	MSM5164	
		MSM5165	
	RCA	CDM6264	
	S-MOS	SRM2064	
		SRM2264	**4177,4178**
	Sharp	LH5164	
	Toshiba	TC5564	
		TC5565	
		TMM2063	
		TMM2064	
KM6266	IDT	IDT8M864	
	Toshiba	TMM5565	
KM6816	AMD	AM9128	
		AM9218	
	Cypress	CY7C128	
	Fujitsu	MB8128	
		MB8416	
	Harris	HM6116	
		HM6516	
	IDT	IDT6116	
	Intel	2128	
	MicroPwr	MP6116	
	Mitsubishi	M58275	
		M5M116	
		M5M5116	
		M5M5117	
		M5M5118	
		MS8725	
	Motorola	MCM2016	
		MCM2016H	
		MCM2128	
		MCM6116	**4119**
		MCM61L16	**4119**
		MCM65116	
	National	MMC2116	
	NEC	μPD4016	
	OKI	MSM2128	
		MSM5128	**4732,4733**
	RCA	MWS6116A	
	SSS	883C21C16	
		BCM21C16	
		SCM21C16	
		SCM6116	
	TI	TMS4016	
	ThomsonCSF	ET2128	
	Toshiba	**TC5516A**	**4263**
		TMM2015A	
		TMM2016	
		TMM2016A	**4263**
	UMC	UM2128	
	Universal	US574HC133	
KS51000	TI	TMS1000	
KS51200	TI	TMS1200	
KS52000	Sharp	SM4A	
LM324	National	LM324	
	SGS	LM324	
	ThomsonCSF	LM324	
LM324A	National	LM324A	
	SGS	LM324A	
	TI	LM324A	
LM567	Exar	XR2567	
		XR567	
	MCE	MCE-567	
	National	LM567	
	Signetics	**NE567**	**3720**
		SE567	**3728**
LM741	MicroPwr	MPOP02	
	National	LM741	
	Plessey	SL562	
	PMI	**OP-02**	**3636**
	SGS	LM741	
LM741	SGS	LS141	
	ThomsonCSF	μA741	
LS285A	SGS	LS285A	
MC1458	Fairchild	UA1458HC	
	Harris	CM1458	
		HA5102	
	MicroPwr	MPOP14	
	Motorola	**MC1458**	**3617**
	National	LF412	
	NEC	MPC251	
	PMI	OP14	
	RCA	**CA1458**	**3672**
	SGS	MC1458	
	Signetics	**SA1458**	**3729**
	ThomsonCSF	μA1458	
	Samsung	**MC4558**	**3679**
MC3361	**Motorola**	**MC3361**	**3613**
MC4558	Fairchild	UA1458HC	
	Harris	CM1458	
		HA5102	
	MicroPwr	MPOP14	
	Motorola	**MC1458**	**3617**
	National	LF412	
	NEC	MPC251	
	PMI	OP14	
	RCA	**CA1458**	**3672**
	SGS	MC1458	
	Signetics	**SA1458**	**3729**
	ThomsonCSF	μA1458	
	Samsung	**MC1458**	**3679**
MC7805	**IPS**	**IP7805**	**3599**
	National	LM340-5	
	SiliconG	SG7805	
	Unitrode	UC7805	
MC7806	Lambda	LMC7806	
		LμA7806	
	Motorola	**MC7806**	**3623**
	SiliconG	SG340-6	
		SG7806	
	TI	μA7806	
	ThomsonCSF	μA7806	
MC7808	Lambda	LMC7808	
		LμA7808	
	Motorola	**MC7808**	**3623**
	NEC	μPC7808	
	SiliconG	SG340-8	
		SG7808	
	TI	μA7808	
	ThomsonCSF	μA7808	
MC7812	Fairchild	μA7812	
	IPS	**IP140-12**	**3599**
		IP340-12	**3599**
		IP7812	**3599**
	Lambda	LMC7812	
		LμA7812	
	Motorola	**MC7812**	**3623**
	National	LM7812	
	NEC	μPC7812	
	SGS	L7812	
	SiliconG	SG340-12	
		SG7812	
	TI	μA7812	
	Toshiba	TA78012	
	Unitrode	UC7812	
MC7815	Fairchild	μA7815	
		μA78L15	
	IPS	**IP140-15**	**3599**
		IP340-15	**3599**
		IP7815	**3599**
	Lambda	LAS1515	
		LMC7815	
		LμA7815	
	Motorola	**MC7815**	**3624**
		MC78L15	
	National	LM340-15	
		LM340LA-15	
		LM340T-15	
		LM7815	
		LM78L15	
	NEC	μPC7815	
		μPC78L15	
	SGS	L7815	
	SiliconG	SG340-15	
		SG7815	
	TI	LM340-15	
		μA7815	
		μA78L15	
	ThomsonCSF	μA7815	
	Toshiba	TA78015	
	Unitrode	UC7815	
MC7818	**Motorola**	**MC7818**	**3624**
	SGS	L7818	

◆ Discontinued

The manufacturers report their devices can be used as direct replacements.
Performance details often differ, so compare the specifications considering your requirements.

Samsung Semiconductor (Cont'd)

Manufacturer Device	Replacement Source	Device	IC Master Page
MC7824	Lambda	LMC7824	
		LμA7824	
	Motorola	**MC7824**	3624
	NEC	μPC7824	
	SGS	L7824	
	SiliconG	SG7824	
	TI	LM340-24	
		μA7824	
	ThomsonCSF	μA7824	
MC78M05	Fairchild	μA78M05	
	Motorola	MC78M05	
	National	LM341-5	
		LM342-05	
		LM78M05	
	NEC	μPC78M05	
	Sanyo	L78M05	
	SGS	L78M05CV	
	TI	μA78M05	
MC78M06	Fairchild	μA78M06	
	Motorola	MC78M06	
	Sanyo	L78M06	
	SGS	L78M06CV	
	TI	μA78M06	
MC78M08	Fairchild	μA78M08	
	Motorola	MC78M08	
	NEC	μPC78M08	
	Sanyo	L78M08	
	SGS	L78M08CV	
	TI	μA78M08	
MC78M12	Fairchild	μA78M12	
	Motorola	MC78M12	
	National	LM341-12	
		LM342-12	
		LM78M12	
	NEC	μPC78M12	
	Sanyo	L78M12	
	SGS	L78M12CV	
MC78M15	Fairchild	μA78M15	
	Motorola	MC78M15	
	National	LM341-15	
		LM342-15	
		LM78M15	
	NEC	μPC78M15	
	Sanyo	L78M15	
	SGS	L78M15CV	
MC78M18	Motorola	MC78M18	
	Sanyo	L78M18	
MC78M24	Fairchild	μA78M24	
	Motorola	MC78M24	
	Sanyo	L78M24	
	SGS	L78M24CV	
	TI	μA78M24	
MC7902	Fairchild	μA7902	
	Lambda	LMC7902	
	Motorola	MC7902	
MC7905	Fairchild	MC7905	
	Lambda	LMC7905	
	Motorola	MC7905	
	SGS	L7905	
	SiliconG	SG7905	
MC7906	Motorola	MC7906	
	TI	μA7906	
MC7908	Fairchild	MC7908	
		μA7908	
		μA79M08	
	Lambda	LMC7908	
		LμA7908	
	Motorola	MC7908	
	SGS	L7908	
	SiliconG	SG7908	
	TI	μA7908	
		μA79M08	
MC7912	Fairchild	μA7912	
		μA79M12	
	IPS	**IP320-12**	3599
		IP7912	3599
	Motorola	MC7912	
	National	LM320MP12	
		LM7912	
		LM79M12	
	NEC	μPC7912	
	SGS	L7912	
	SiliconG	SG320P-12	
		SG7912	
	TI	LM320-12	
		μA7912	
	ThomsonCSF	μA7912	
	Unitrode	UC7912	
MC7915	Fairchild	μA7915	
	IPS	**IP320-15**	3599
		IP7915	3599
	Motorola	MC7915	
	National	LM320-15	
		LM320T15	
		LM7915	
	NEC	μPC7915	
	SGS	L7915	
	SiliconG	SG320-15	
		SG7915	
	TI	LM320-5	
		μA7915	
	ThomsonCSF	μA7915	
	Unitrode	UC7915	
MC7918	Motorola	MC7918	
	SGS	L7918	
	SiliconG	SG7918	
	TI	μA7918	
MC7924	Motorola	MC7924	
	TI	μA7924	
MK50981	CTI	52981	
	Mostek	MK50981	
	National	TP50981	
MK50992	Mostek	MK50992	
MK50993	Mostek	MK50993	
ML8204	Cherry	CS8204	
	Mitel	ML8204	
	Plessey	MV8204	
ML8205	Cherry	CS8205	
	Exar	XRT8205	
	Mitel	ML8205	
NE555	Exar	XR555	
	Fairchild	μA555	
	Hitachi	HA17555	
	Intersil	NE555	
	Mitsubishi	M51841	
		M51848	
		M5251	
		M5E555	
	Motorola	MC1455	
	NEC	μPC1555	
	Raytheon	RC555	
	RCA	CA555	
	Sanyo	LB8555	
	SGS	NE555	
	Signetics	**NE555**	3721
		NE555N	
	TI	NE555	
	ThomsonCSF	LM555	
NE556	Mitsubishi	M5E556	
	SGS	NE556	
	Signetics	**NE556**	3721
	ThomsonCSF	LM556	
PDB3535	Mostek	PBD3535	

Sanyo Semiconductor

Manufacturer Device	Replacement Source	Device	IC Master Page
L78M05	Fairchild	μA78M05	
	Motorola	MC78M05	
	National	LM341-5	
		LM342-05	
		LM78M05	
	NEC	μPC78M05	
	SGS	L78M05CV	
	TI	μA78M05	
	Samsung	MC78M05	
L78M06	Fairchild	μA78M06	
	Motorola	MC78M06	
	SGS	L78M06CV	
	TI	μA78M06	
	Samsung	MC78M06	
L78M08	Fairchild	μA78M08	
	Motorola	MC78M08	
	NEC	μPC78M08	
	SGS	L78M08CV	
	TI	μA78M08	
	Samsung	MC78M08	
L78M12	Fairchild	μA78M12	
	Motorola	MC78M12	
	National	LM341-12	
		LM342-12	
		LM78M12	
	NEC	μPC78M12	
	SGS	L78M12CV	
	Samsung	MC78M12	
L78M15	Fairchild	μA78M15	
	Motorola	MC78M15	
	National	LM341-15	
		LM342-15	
		LM78M15	
	NEC	μPC78M15	

(Continued)

Manufacturer Device	Replacement Source	Device	IC Master Page
L78M15	SGS	L78M15CV	
	Samsung	MC78M15	
L78M18	Motorola	MC78M18	
	Samsung	MC78M18	
L78M24	Fairchild	μA78M24	
	Motorola	MC78M24	
	SGS	L78M24CV	
	TI	μA78M24	
	Samsung	MC78M24	
LA1150	Sprague	ULN-2243	
LA1240	Hitachi	HA1197	
LA1352	**Motorola**	**MC1352**	3612
LA1365	Motorola	LM3065	
		M5140	
	National	LM3064	
	RCA	CA3065	
	TI	SN76666	
LA3045	Fairchild	UA3045	
	National	LM3045	
	Plessey	SL3086	
	Sprague	ULS-2045	
LA3046	Fairchild	UA3046	
	Motorola	**MC3346**	3614
	National	LM3046	
	Plessey	SL3046	
		SL3146	
	RCA	**CA3046**	3678
		CA3146	3678
	SGS	CA3046	
		TBA331	
	SiliconG	SG3046	
		SG3146	
		SG3821	
	Sprague	ULN-2046	
	ThomsonCSF	SFC	
LA3086	Fairchild	UA3086	
	Motorola	**MC3386**	3614
	National	LM3086	
	Plessey	SL3086	
	RCA	**CA3086**	3678
	SiliconG	SG3086	
		SG3886	
	Sprague	ULN-2086	
	ThomsonCSF	SFC2086	
LA6358	**Motorola**	**LM358**	3617
	National	LM358A	
	NEC	μPC358	
	RCA	**CA358A**	3672
		LM358	
	SGS	LM358	
	Signetics	**LM358**	3722,3729
		NE532	3729
	TI	LM358	
	ThomsonCSF	LM358	
LA6393	**Motorola**	**LM393**	3631
	Signetics	LM393	
	TI	LM393	
LA705	Fairchild	μA705	
	Motorola	**MC1309**	3614
		MC1311	
	National	LM1800	
	RCA	CA3145	
		CA3195	
	Sanyo	LA758	
	Signetics	**μA758**	3727
	Sprague	ULN-3809	
		ULN-3812	
	TI	SN76111	
		SN76116	
LA758	Fairchild	μA705	
	Motorola	**MC1309**	3614
		MC1311	
	National	LM1800	
	RCA	CA3145	
		CA3195	
	Sanyo	LA705	
	Signetics	**μA758**	3727
	Sprague	ULN-3809	
		ULN-3812	
	TI	SN76111	
		SN76116	
LB1231	Exar	XR2001	
		XR2001C	
		XR2201C	
	Mitsubishi	M54524	
	Motorola	**MC1411**	3212
		ULN2001	3212
	NEC	μPA2001	
	RIFA	PBD3523-11	
	SGS	L201	
		ULN2001	
	SiliconG	SG2001	

(Continued)

Manufacturer Device	Replacement Source	Device	IC Master Page
LB1231	**Sprague**	**ULN-2001**	3269
		ULQ-2001	
	TI	ULN2001A	
	Toshiba	TD62001	
		TD62101	
LB1232	Exar	XR2002C	
		XR2202C	
	Fairchild	MC1412	
	Mitsubishi	M54525	
	Motorola	**MC1412**	3212
		ULN2002	3212
	NEC	μPA2002	
	RIFA	PBD352304	
	SGS	L202	
		ULN2002	
	Signetics	NE5602	
	SiliconG	SG2002	
	Sprague	ULN-2002	
	TI	ULN2002A	
	Toshiba	TD62002	
LB1233	Exar	XR2003C	
		XR2203C	
	Fairchild	MC1413	
	Mitsubishi	M54523	
	Motorola	**MC1413**	3212
		ULN2003	3212
	NEC	μPA2003	
	RIFA	PBD352303	
	SGS	L203	
		ULN2003	
	Signetics	NE5603	
		ULN2003	3721
	SiliconG	SG2003	
	Sprague	ULN-2003	
	Telefunken	TDA2003	
	TI	ULN2003A	
	Toshiba	TD62003	
		TD62103	
LB1234	Exar	XR2204C	
	Mitsubishi	M54526	
	Motorola	**MC1416**	3212
		ULN2004	3212
	NEC	μPA2004	
	RIFA	PBD352302	
	SGS	L204	
		ULN2004	
	Signetics	NE5604	
		ULN2004	3721
	SiliconG	SG2004	
	Sprague	ULN-2004	
		ULS-2004	
	TI	ULN2004A	
	Toshiba	TD62004	
		TD62104	
LB1260	Mitsubishi	M54535	
LB1271	Mitsubishi	M54527	
LB1288	Mitsubishi	M54516	
LB1290	Dionics	DI513B	
		DI514B	
	Exar	**XR6118**	3554
	OKI	MSL912	
	Signetics	**NE594**	3726
	Sprague	**UDN-6118**	3269
	Toshiba	TD62781	
LB8555	Exar	XR555	
	Fairchild	μA555	
	Hitachi	HA17555	
	Intersil	NE555	
	Mitsubishi	M51841	
		M51848	
		M5251	
		M5E555	
	Motorola	MC1455	
	NEC	μPC1555	
	Raytheon	RC555	
	RCA	CA555	
	SGS	NE555	
	Signetics	**NE555**	3721
		NE555N	
	TI	NE555	
	ThomsonCSF	LM555	
	Samsung	**NE555**	3679
LC4001B	Fairchild	F4001	
	Motorola	MC14001	
	National	CD4001	
		MM74C02	
	OKI	MSM4001	
	RCA	CD4001	
	SGS	HCC/HCF4001	
	Signetics	HEF4001	
	Solitron	CM4001	

(Continued)

◆ Discontinued

Bold face device numbers indicate manufacturers data is provided in the IC Master on the pages noted.

Sanyo Semiconductor (Cont'd)

Manufacturer Device	Replacement Source	Device	IC Master Page
LC4001B	SSS	SCL4001	
	Toshiba	TC4001	
LC4011	Fairchild	F4011	
	Motorola	MC14011	
	National	CD4011	
		MM74C00	
	OKI	MSM4011	
	RCA	CD4011	
	SGS	HCC/HCF4011	
	Signetics	HEF4011	
	Solitron	CM4011	
	SSS	SCL4011	
	Toshiba	TC4011	
LC4013	Fairchild	F4013	
	Motorola	MC14013	
	National	CD4013	
		MM74C74	
	OKI	MSM4013	
	RCA	CD4013	
	SGS	HCC/HCF4013	
	Signetics	HEF4013	
	Solitron	CM4013	
	SSS	SCL4013	
	Toshiba	TC4013	
LC4015	Fairchild	F4015	
	Motorola	MC14015	
	National	CD4015	
		MM74C164	
	OKI	MSM4015	
	RCA	CD4015	
	SGS	HCC/HCF4015	
	Signetics	HEF4015	
	Solitron	CM4015	
	SSS	SCL4015	
	Toshiba	TC4015	
LC4016	Fairchild	F4016	
		F4066	
	Motorola	MC14016	
		MC14066	
	National	CD4016	
		CD4066	
	RCA	CD4016	
		CD4066	
	Sanyo	LC4066	
	SGS	HCC/HCF4016	
		HCC/HCF4066	
	Signetics	HEF4016	
		HEF4066	
	Solitron	CM4016	
		CM4066	
		HCF4016	
	SSS	SCL4016	
		SCL4066	
	Toshiba	TC4016	
		TC4066	
LC4019	Fairchild	F4019	
	National	CD4019	
	OKI	MSM4019	
	RCA	CD4019	
	SGS	HCC/HCF4019	
	Signetics	HEF4019	
	Solitron	CM4019	
	SSS	SCL4019	
	Toshiba	TC4019	
LC4027	Fairchild	F4027	
	Motorola	MC14027	
	National	CD4027	
		MM74C76	
	OKI	MSM4027	
	RCA	CD4027	
	SGS	HCC/HCF4027	
	Signetics	HEF4027	
	Solitron	CM4027	
	SSS	SCL4027	
LC4028	Fairchild	F4028	
	Motorola	MC14028	
	National	CD4028	
		MM74C42	
	OKI	MSM4028	
	RCA	CD4028	
	SGS	HCC/HCF4028	
	Signetics	HEF4028	
	Solitron	CM4028	
	SSS	SCL4028	
	Toshiba	TC4028	
LC4049	Fairchild	F4049	
	Motorola	MC14049	
	National	CD4049	
	OKI	MSM4049	
LC4049	RCA	CD4049	
	SGS	HCC/HCF4049	
	Signetics	HEF4049	
	Solitron	CM4049	
	SSS	SCL4049	
	Toshiba	TC4049	
LC4066	Fairchild	F4016	
		F4066	
	Motorola	MC14016	
		MC14066	
	National	CD4016	
		CD4066	
	RCA	CD4016	
		CD4066	
	Sanyo	LC4016	
	SGS	HCC/HCF4016	
		HCC/HCF4066	
	Signetics	HEF4016	
		HEF4066	
	Solitron	CM4016	
		CM4066	
		HCF4016	
	SSS	SCL4016	
		SCL4066	
	Toshiba	TC4016	
		TC4066	
LC4069	Fairchild	F4069	
	Motorola	MC14069	
	National	CD4069	
		MM54C04	
		MM74C04	
	OKI	MSM4069	
	RCA	CD4069	
	SGS	HCC/HCF4069	
	Signetics	HEF4069	
	Solitron	CM4069	
	SSS	SCL4069	
		SCL4449	
	Toshiba	TC4069	
LC4071	Fairchild	F4071	
	Motorola	MC14071	
	National	CD4071	
		MM74C32	
	OKI	MSM4071	
	RCA	CD4071	
	SGS	HCC/HCF4071	
	Signetics	HEF4071	
	Solitron	CM4071	
	SSS	SCL4071	
	Toshiba	TC4071	
LC4081	Fairchild	F4081	
	Motorola	MC14081	
	National	CD4081	
		MM74C08	
	OKI	MSM4081	
	RCA	CD4081	
	SGS	HCC/HCF4081	
	Signetics	HEF4081	
	Solitron	CM4081	
	SSS	SCL4081	
	Toshiba	TC4081	
LC4520	Fairchild	F4520	
	Motorola	MC14520	
	National	CD4520	
	OKI	MSM4520	
	RCA	CD4520	
	SGS	HCC/HCF4520	
	Signetics	HEF4520	
	Solitron	CM4520	
	SSS	SCL4520	
	Toshiba	TC4520	

SBE, Inc.

Manufacturer Device	Replacement Source	Device	IC Master Page
1010	GouldAMI	1010	
1020	GouldAMI	1020	
1120	GouldAMI	1120	
560	GouldAMI	560	
590	GouldAMI	590	

SEEQ Technology, Inc.

Manufacturer Device	Replacement Source	Device	IC Master Page
27128	AMD	AM27128	
	Fujitsu	MBM27128	
	Hitachi	HM4827128	
	Intel	27128	
		27128A	**4074**
	Mitsubishi	M5L27128	
		M5L27C128	
	NEC	μPD27128	
	SGS	M27128	
27128	**TI**	**TMS27C128**	**4210**
	Toshiba	TMM27128	
27256	AMD	AM27256	
	Fujitsu	MBM27256	
		MBM27C256	
	GI	R09256	
	Hitachi	HM4827256	
		HN27256	
		HN27C256	**4037**
	Intel	27256	
		27C256	**4079**
	Mitsubishi	M5L27256	
		MSL27256	
	Motorola	MCM67256	
	National	NMC27C256	
	NEC	MPD27256	
		UPD27256	
		UPD27C256	
		UPD27C256A	
	SEEQ	27C256	
	SGS	M27256	
	SSS	SCM27C128	
	Toshiba	TC57256	
		TMM27256	
		TMM27C256	
	VTI	**VT27C256**	**4265,4273**
2764	AMD	AM2764	
	Fujitsu	MBM2764	
		MBM27C64	
	Hitachi	HM482764	
		HN2764	
		HN27C64	
		HN482764	
	Intel	2764	
		2764A	
		27C64	**4078**
		87C64	**4078**
	Mitsubishi	M5L2764	
	NEC	UPD2764	
		UPD27C64	
	OKI	MSM2764	
		MSM2764A	**4732**
		MSM27C64	
	Rockwell	R2764	
		R27C64	
		R87C64	
	S-MOS	SPM27C64	
	SEEQ	5133	
	SGS	M2764	
	Signetics	27C64	
	SSS	SCM27C64	
	TI	TMS27C64	
	ThomsonCSF	ET2764	
	Toshiba	**TMM2764**	**4263**
27C256	AMD	AM27256	
	Fujitsu	MBM27256	
		MBM27C256	
	GI	R09256	
	Hitachi	HM4827256	
		HN27256	
		HN27C256	**4037**
	Intel	27256	
		27C256	**4079**
	Mitsubishi	M5L27256	
		MSL27256	
	Motorola	MCM67256	
	National	NMC27C256	
	NEC	MPD27256	
		UPD27256	
		UPD27C256	
		UPD27C256A	
	SEEQ	27256	
	SGS	M27256	
	SSS	SCM27C128	
	Toshiba	TC57256	
		TMM27256	
		TMM27C256	
	VTI	**VT27C256**	**4265,4273**
2816A	EXEL	XL2816A	
	Intel	2816A	
	Rockwell	R5516A/2816A	
	Samsung	**KM2816A**	**4140**
2817A	EXEL	XL2817A	
	Intel	2817A	
	Samsung	KM2817A	
2864	AMD	AM2864B	
		AM9864	
	EXEL	XL2864A	
		XLS2864A	
	Fujitsu	UBM28C64	
2864	Hitachi	HN58064	
	Xicor	**X2864A**	**734,4280**
5133	AMD	AM2764	
	Fujitsu	MBM2764	
		MBM27C64	
	Hitachi	HM482764	
		HN2764	
		HN27C64	
		HN482764	
	Intel	2764	
		2764A	
		27C64	**4078**
		87C64	**4078**
	Mitsubishi	M5L2764	
	NEC	UPD2764	
		UPD27C64	
	OKI	MSM2764	
		MSM2764A	**4732**
		MSM27C64	
	Rockwell	R2764	
		R27C64	
		R87C64	
	S-MOS	SPM27C64	
	SEEQ	2764	
	SGS	M2764	
	Signetics	27C64	
	SSS	SCM27C64	
	TI	TMS27C64	
	ThomsonCSF	ET2764	
	Toshiba	**TMM2764**	**4263**
52B23	Motorola	MCM2833	
	NCR	**NCR52832**	**4129**
	SEEQ	52B23H	
52B23H	Motorola	MCM2833	
	NCR	**NCR52832**	**4129**
	SEEQ	52B23	
52B33	Fujitsu	UBM28C64	
	Rockwell	R52B33	
72720	TI˙	TMS72720	
8023A	Intel	82501	

Semi Processes Inc.

Manufacturer Device	Replacement Source	Device	IC Master Page
SD5000	Siliconix	SDS000	
SD5001	Siliconix	SDS001	
SD5002	Siliconix	SDS002	
SD5200	Siliconix	SDS200	
		SI5200	
SP54HC540	**Motorola**	**MC54HC540**	**1125**
	RCA	**CD54HC540**	**1149**
	SSS	SS54HC540	
SP54HCT138	CTI	54HCT138	
	IDT	IDT54HCT138	
	Mitel	MD54HCT138	
	Motorola	MC54HCT138	
	Signetics	54HCT138	
	SSS	SS54HCT138	
	TI	**SN54HCT138**	**714**
SP54HCT139	CTI	54HCT139	
	IDT	IDT54HCT139	
	Mitel	MD54HCT139	
	RCA	**CD54HCT139**	**1150**
	Signetics	54HCT139	
	SSS	SS54HCT139	
SP54HCT240	CTI	54HCT240	
	Mitel	MD54HCT240	
	Motorola	MC54HCT240	
	National	MM54HCT240	
	RCA	**CD54HCT240**	**1149**
	Supertex	SI54HCT240	
	TI	**SN54HCT240**	**714**
SP54HCT241	CTI	54HCT241	
	Mitel	MD54HCT241	
	Motorola	MC54HCT241	
	National	MM54HCT241	
	RCA	**CD54HCT241**	**1149**
	Signetics	54HCT241	
	SSS	SS54HCT241	
	Supertex	SI54HCT241	
	TI	**SN54HCT241**	**714**
SP54HCT244	CTI	54HCT244	
	Mitel	MD54HCT244	
	Motorola	MC54HCT244	
	National	MM54HCT244	
	RCA	**CD54HCT244**	**1149**
	Signetics	54HCT244	
	SSS	SS54HCT244	
	Supertex	SI54HCT244	
	TI	**SN54HCT244**	**714**
SP54HCT245	CTI	54HCT245	
	Mitel	MD54HCT245	
	Motorola	MC54HCT245	

(Continued)

· Discontinued

The manufacturers report their devices can be used as direct replacements.
Performance details often differ, so compare the specifications considering your requirements.

Semi Processes Inc. (Cont'd)

Manufacturer Device	Replacement Source	Device	IC Master Page
SP54HCT245	**RCA**	**CD54HCT245**	1149
	Signetics	54HCT245	
	SSS	SS54HCT245	
	TI	**SN54HCT245**	714
SP54HCT373	CTI	54HCT373	
	Mitel	MD54HCT343	
		MD54HCT373	
	Motorola	MC54HCT373	
	National	MM54HCT373	
	RCA	**CD54HCT373**	1150
	Signetics	54HCT373	
	SSS	SS54HCT373	
	Supertex	SI54HCT373	
	TI	**SN54HCT373**	714
SP54HCT374	CTI	54HCT374	
	Mitel	MD54HCT374	
	Motorola	MC54HCT374	
	National	MM54HCT374	
	RCA	**CD54HCT374**	1149
	SSS	SS54HCT374	
	Supertex	SI54HCT374	
	TI	**SN54HCT374**	714
SP54HCT540	CTI	54HCT540	
	Mitel	MD54HCT540	
	Motorola	MC54HCT540	
	RCA	**CD54HCT540**	1149
	Signetics	54HCT540	
	SSS	SS54HCT540	
	TI	**SN54HCT540**	714
SP54HCT541	CTI	54HCT541	
	Mitel	MD54HCT541	
	Motorola	MC54HCT541	
	RCA	**CD54HCT541**	1149
	Signetics	54HCT541	
	SSS	SS54HCT541	
	TI	**SN54HCT541**	714
SP54HCT573	CTI	54HCT573	
	Mitel	MD54HCT573	
	RCA	**CD54HCT573**	1150
	Signetics	54HCT573	
	SSS	SS54HCT573	
SP54HCT574	CTI	54HCT574	
	Mitel	MD54HCT574	
	RCA	**CD54HCT574**	1149
	Signetics	54HCT574	
	SSS	SS54HCT574	
SP7003	MasterLogic	ML7003	
SP7005	MasterLogic	ML7005	
SP7010	MasterLogic	ML7010	
SP7015	MasterLogic	ML7015	
SP7020	MasterLogic	ML7020	
SP74HC00	Hitachi	HD74HC00	
	Motorola	**MC74HC00**	1122
	National	MM74HC00	
	RCA	**CD74HC00**	1149
	SGS	M74HC00	
	Signetics	**74HC00**	1156
	TI	SN74HC00	
	Toshiba	**TC40H000**	1363
	Universal	US74HC00	
SP74HC02	Hitachi	HD74HC02	
	Motorola	**MC74HC02**	1122
	National	MM74HC02	
	RCA	**CD74HC02**	1149
	SGS	M74HC02	
	Signetics	**74HC02**	1156
	TI	SN74HC02	
	Toshiba	**TC40H002**	1363
	Universal	US74HC02	
SP74HC04	Hitachi	HD74HC04	
	Motorola	**MC74HC04**	1124
	National	MM74HC04	
	RCA	**CD74HC04**	1149
	SGS	M74HC04	
	TI	SN74HC04	
	Toshiba	**TC40H004**	1363
	Universal	US74HC04	
SP74HC08	Hitachi	HD74HC08	
	Motorola	**MC74HC08**	1122
	National	MM74HC08	
	RCA	**CD74HC08**	1149
	SGS	M74HC08	
	Signetics	**74HC08**	1156
	TI	SN74HC08	
	Universal	US74HC08	
SP74HC10	Hitachi	HD74HC10	
	Motorola	**MC74HC10**	1122
	National	MM74HC10	
	RCA	**CD74HC10**	1149
	SGS	M74HC10	
SP74HC10	**Signetics**	**74HC10**	1156
	SiliconG	SG75474	
	TI	SN74HC10	
	Toshiba	**TC40H010**	1363
	Universal	US74HC10	
SP74HC107	Hitachi	HD74HC107	
	Motorola	**MC74HC107**	1126
	National	MM74HC107	
	Nitron	NC74HC107	
	RCA	**CD74HC107**	1149
	SGS	M74HC107	
	Signetics	**74HC107**	1156
	TI	SN74HC107	
	Toshiba	**TC40H107**	1363
	Universal	US74HC107	
SP74HC109	Hitachi	HD74HC109	
		HD74HC14	
	Motorola	**MC74HC109**	1126
	National	MM74HC109	
	Nitron	NC74HC109	
	RCA	**CD74HC109**	1149
	SGS	M74HC109	
	Signetics	**74HC109**	1156
	TI	SN74HC109	
	Toshiba	**TC74HC109**	1363
	Universal	US74HC109	
SP74HC11	Hitachi	HD74HC11	
	Motorola	**MC74HC11**	1122
	National	MM74HC11	
	RCA	**CD74HC11**	1149
	SGS	M74HC11	
	Signetics	**74HC11**	1156
	TI	SN74HC11	
	Toshiba	**TC40H011**	1363
	Universal	US74HC11	
SP74HC112N	Hitachi	HD74HC112	
	Motorola	**MC74HC112**	1126
	National	MM74HC112	
	RCA	**CD74HC112**	1149
	SGS	M74HC112	
	Signetics	**74HC112**	1156
	TI	SN74HC112	
	Universal	US74HC112	
SP74HC113	Hitachi	HD74HC113	
	Motorola	**MC74HC113**	1126
	National	MM74HC113	
	SGS	M74HC113	
	TI	SN74HC113	
	Universal	US74HC113	
SP74HC125	Hitachi	HD74HC125	
	Motorola	**MC74HC125**	1124
	National	MM74HC125	
	SGS	M74HC125	
	TI	SN74HC125	
	Toshiba	**TC74HC125**	1363
	Universal	US74HC125	
SP74HC126	Hitachi	HD74HC126	
	Motorola	**MC74HC126**	1124
	National	MM74HC126	
	SGS	M74HC126	
	TI	SN74HC126	
	Toshiba	**TC74HC126**	1363
	Universal	US74HC126	
SP74HC132	Hitachi	HD74HC132	
	Motorola	**MC74HC132**	1125
	National	MM74HC132	
	RCA	**CD74HC132**	1149
	SGS	M74HC132	
	Signetics	**74HC132**	1157
	TI	SN74HC132	
	Universal	US74HC132	
SP74HC133	**Motorola**	**MC74HC133**	1122
	National	MM74HC133	
	RCA	CD74HC133	
	SGS	M74HC133	
	Signetics	74HC133	
	TI	SN74HC133	
	Universal	US74HC133	
SP74HC137	Hitachi	HD74HC137	
	Motorola	MC74HC137	
	National	MM74HC137	
	SGS	M74HC137	
	TI	SN74HC137	
	Toshiba	**TC74HC137**	1363
	Universal	US74HC137	
SP74HC138	Hitachi	HD74HC138	
	Motorola	**MC74HC138**	1130
	National	MM74HC138	
	Nitron	NC74HC138	
	RCA	**CD74HC138**	1150
	SGS	M74HC138	
	Signetics	**74HC138**	1157
SP74HC138	SSS	SS74HC138	
	TI	SN74HC138	
	Universal	US74HC138	
SP74HC139	Hitachi	HD74HC139	
	Motorola	**MC74HC139**	1130
	National	MM74HC139	
	Nitron	NC74HC139	
	RCA	**CD74HC139**	1150
	SGS	M74HC139	
	Signetics	**74HC139**	1157
	SSS	SS74HC139	
	TI	SN74HC139	
	Toshiba	**TC40H139**	1363
	Universal	US74HC139	
SP74HC14	**Motorola**	**MC74HC14**	1125
	National	MM74HC14	
	RCA	**CD74HC14**	1149
	SGS	M74HC14	
	Signetics	**74HC14**	1156
	TI	SN74HC14	
	Universal	US74HC14	
SP74HC147	Hitachi	HD74HC147	
	Motorola	**MC74HC147**	1131
	National	MM74HC147	
	RCA	**CD74HC147**	1150
	SGS	M74HC147	
	Signetics	**74HC147**	1157
	TI	SN74HC147	
	Universal	US74HC147	
SP74HC148	Hitachi	HD74HC148	
	Nitron	NC74HC148	
	SGS	M74HC148	
	TI	SN74HC148	
	Toshiba	**TC74HC148**	1363
SP74HC151	Hitachi	HD74HC151	
	Motorola	**MC74HC151**	1129
	National	MM74HC151	
	RCA	**CD74HC151**	1150
	SGS	M74HC151	
	Signetics	**74HC151**	1157
	TI	SN74HC151	
	Universal	US74HC151	
SP74HC153	Hitachi	HD74HC153	
	Motorola	**MC74HC153**	1129
	National	MM74HC153	
	RCA	**CD74HC153**	1150
	SGS	M74HC153	
	Signetics	**74HC153**	1157
	TI	SN74HC153	
	Toshiba	**TC40H153**	1363
	Universal	US74HC153	
SP74HC157	Hitachi	HD74HC157	
	Motorola	**MC74HC157**	1129
	National	MM74HC157	
	Nitron	NC74HC157	
	RCA	**CD74HC157**	1150
	SGS	M74HC157	
	Signetics	**74HC157**	1157
	TI	SN74HC157	
	Toshiba	**TC40H157**	1363
	Universal	US74HC157	
SP74HC158	Hitachi	HD74HC158	
	Motorola	**MC74HC158**	1129
	National	MM74HC158	
	RCA	**CD74HC158**	1150
	SGS	M74HC158	
	Signetics	**74HC158**	1157
	TI	SN74HC158	
	Toshiba	**TC40H158**	1363
	Universal	US74HC158	
SP74HC160	**Motorola**	**MC74HC160**	1127
	National	MM74HC160	
	RCA	**CD74HC160**	1150
	SGS	M74HC160	
	Signetics	**74HC160**	1157
	TI	SN74HC160	
	Universal	US74HC160	
SP74HC161	Hitachi	HD74HC161	
	Motorola	**MC74HC161**	1127
	National	MM74HC161	
	RCA	**CD74HC161**	1150
	SGS	M74HC161	
	Signetics	**74HC161**	1157
	TI	SN74HC161	
	Universal	US74HC161	
SP74HC162	Hitachi	HD74HC162	
	Motorola	**MC74HC162**	1127
	National	MM74HC162	
	RCA	**CD74HC162**	1150
	SGS	M74HC162	
	Signetics	**74HC162**	1157
SP74HC162	TI	SN74HC162	
	Universal	US74HC162	
SP74HC163	Hitachi	HD74HC163	
	Motorola	**MC74HC163**	1127
	National	MM74HC163	
	RCA	**CD74HC163**	1150
	SGS	M74HC163	
	Signetics	**74HC163**	1157
	TI	SN74HC163	
	Universal	US74HC163	
SP74HC164	Hitachi	HD74HC164	
	Motorola	**MC74HC164**	1128
	National	MM74HC164	
	RCA	**CD74HC164**	1149
	SGS	M74HC164	
	Signetics	**74HC164**	1157
	TI	SN74HC164	
	Universal	US74HC164	
SP74HC165	Hitachi	HD74HC165	
	Motorola	**MC74HC165**	1128
	National	MM74HC165	
	RCA	**CD74HC165**	1149
	SGS	M74HC165	
	Signetics	**74HC165**	1157
	TI	SN74HC165	
	Universal	US74HC165	
SP74HC173	Hitachi	HD74HC173	
	Motorola	**MC74HC173**	1126
	National	MM74HC173	
	RCA	**CD74HC173**	1149
	SGS	M74HC173	
	Signetics	**74HC173**	1157
	TI	SN74HC173	
	Universal	US74HC173	
SP74HC174	Hitachi	HD74HC174	
	Motorola	**MC74HC174**	1126
	National	MM74HC174	
	Nitron	NC74HC174	
	RCA	**CD74HC174**	1149
	SGS	M74HC174	
	Signetics	74HC174	
	TI	SN74HC174	
	Toshiba	**TC40H174**	1363
	Universal	US74HC174	
SP74HC175	Hitachi	HD74HC175	
	Motorola	**MC74HC175**	1126
	National	MM74HC175	
	Nitron	NC74HC175	
	RCA	**CD74HC175**	1149
	SGS	M74HC175	
	Signetics	**74HC175**	1157
	TI	SN74HC175	
	Toshiba	**TC40H175**	1363
	Universal	US74HC175	
SP74HC182	Motorola	MC74HC182	
	SGS	M74HC182	
SP74HC192	Hitachi	HD74HC192	
	Motorola	**MC74HC192**	1127
	National	MM74HC192	
	RCA	**CD74HC192**	1150
	SGS	M74HC192	
	Signetics	**74HC192**	1157
	TI	SN74HC192	
	Toshiba	**TC40H192**	1363
	Universal	US74HC192	
SP74HC193	Hitachi	HD74HC193	
	Motorola	**MC74HC193**	1127
	National	MM74HC193	
	RCA	**CD74HC193**	1150
	SGS	M74HC193	
	Signetics	**74HC193**	1157
	TI	SN74HC193	
	Toshiba	**TC40H193**	1363
	Universal	US74HC193	
SP74HC194	Hitachi	HD74HC194	
	Motorola	**MC74HC194**	1128
	National	MM74HC194	
	RCA	**CD74HC194**	1149
	SGS	M74HC194	
	Signetics	**74HC194**	1157
	TI	SN74HC194	
	Universal	US74HC194	
SP74HC195	Hitachi	HD74HC195	
	Motorola	**MC74HC195**	1128
	National	MM74HC195	
	RCA	**CD74HC195**	1149
	SGS	M74HC195	
	Signetics	**74HC195**	1157
	TI	SN74HC195	
	Universal	US74HC195	
SP74HC20	Hitachi	HD74HC20	
	Motorola	**MC74HC20**	1122

(Continued)

◆ Discontinued

Bold face device numbers indicate manufacturers data is provided in the IC Master on the pages noted.

Semi Processes Inc. (Cont'd)

Manufacturer Device	Replacement Source	Device	IC Master Page
SP74HC20	National	MM74HC20	
	RCA	**CD74HC20**	1149
	SGS	M74HC20	
	Signetics	**74HC20**	1156
	TI	SN74HC20	
	Toshiba	**TC40H020**	1363
	Universal	US74HC20	
SP74HC238	**RCA**	**CD74HC238**	1150
	SGS	M74HC238	
	Signetics	**74HC238**	1157
	SSS	SS74HC238	
	TI	SN74HC238	
SP74HC239	Motorola	MC74HC239	
	TI	SN74HC239	
SP74HC240	Hitachi	HD74HC240	
	Mitel	MD74HC240	
	Motorola	**MC74HC240**	1124
	National	MM74HC240	
	Nitron	NC74HC240	
	RCA	**CD74HC240**	1149
	SGS	M74HC240	
	Signetics	**74HC240**	1157
	SSS	SS74HC240	
	Supertex	SI74HC240	
	TI	SN74HC240	
	Toshiba	**TC40H240**	1363
	Universal	US74HC240	
	Zytrex	ZX74HC240	
SP74HC241	Hitachi	HD74HC241	
	Mitel	MD74HC241	
	Motorola	**MC74HC241**	1124
	National	MM74HC241	
	Nitron	NC74HC241	
	RCA	**CD74HC241**	1149
	SGS	M74HC241	
	Signetics	**74HC241**	1157
	SSS	SS74HC241	
	Supertex	SI74HC241	
	TI	SN74HC241	
	Universal	US74HC240	
	Zytrex	ZX74HC241	
SP74HC242	Hitachi	HD74HC242	
	Motorola	**MC74HC242**	1124
	National	MM74HC242	
	Nitron	NC74HC242	
	RCA	**CD74HC242**	1149
		SGN	
	SGS	M74HC242	
	Signetics	**74HC242**	1158
	TI	SN74HC242	
	Universal	US74HC242	
SP74HC243	Hitachi	HD74HC243	
	Motorola	**MC74HC243**	1124
		MC74HC245	1124
	National	MM74HC243	
	RCA	**CD74HC243**	1149
	SGS	M74HC243	
		M74HC245	
	Signetics	**74HC243**	1158
	TI	SN74HC243	
	Universal	US74HC243	
SP74HC244	Hitachi	HD74HC244	
	Mitel	MD74HC244	
	Motorola	**MC74HC244**	1124
	National	MM74HC244	
	Nitron	NC74HC244	
	RCA	**CD74HC244**	1149
	SGS	M74HC244	
	Signetics	**74HC244**	1158
	SSS	SS74HC244	
	Supertex	SI74HC244	
	TI	SN74HC244	
	Universal	US74HC244	
	Zytrex	ZX74HC244	
SP74HC251	Hitachi	HD74HC251	
	Motorola	**MC74HC251**	1129
	National	MM74HC251	
	RCA	**CD74HC251**	1150
	SGS	M74HC251	
	Signetics	**74HC251**	1158
	TI	SN74HC251	
	Universal	US74HC251	
SP74HC253	Hitachi	HD74HC253	
	Motorola	**MC74HC253**	1129
	National	MM74HC253	
	RCA	**CD74HC253**	1150
	SGS	M74HC253	
	Signetics	**74HC253**	1158
	TI	SN74HC253	
	Universal	US74HC253	
SP74HC257	Hitachi	HD74HC257	
	Motorola	**MC74HC257**	1129
	National	MM74HC257	
	Nitron	NC74HC257	
	RCA	**CD74HC257**	1150
	SGS	M74HC257	
	Signetics	**74HC257**	1158
	TI	SN74HC257	
	Universal	US74HC257	
SP74HC258	SGS	M74HC258	
SP74HC259	Hitachi	HD74HC259	
	Motorola	**MC74HC259**	1126
	National	MM74HC259	
	RCA	**CD74HC259**	1150
	Signetics	**74HC259**	1158
	TI	SN74HC259	
	Universal	US74HC259	
SP74HC266	Hitachi	HD74HC266	
	Motorola	**MC74HC266**	1123
	National	MM74HC266	
	SGS	M74HC266	
	Signetics	**74HC266**	1158
	TI	SN74HC266	
	Universal	US74HC266	
SP74HC27	**Motorola**	**MC74HC27**	1122
	National	MM74HC27	
	RCA	**CD74HC27**	1149
	SGS	M74HC27	
	Signetics	**74HC27**	1156
	TI	SN74HC27	
	Toshiba	**TC40H027**	1363
	Universal	US74HC27	
SP74HC273	CTI	74HC273	
	Hitachi	HD74HC273	
	Motorola	**MC74HC273**	1126
	Nitron	NC74HC273	
	RCA	**CD74HC273**	1149
	SGS	M74HC273	
	Signetics	**74HC273**	1158
	TI	SN74HC273	
	Universal	US74HC273	
SP74HC280	Hitachi	HD74HC280	
	Motorola	**MC74HC280**	1132
	National	MM74HC280	
	RCA	**CD74HC280**	1150
	SGS	M74HC280	
	Signetics	**74HC280**	1158
	TI	SN74HC280	
SP74HC298	Hitachi	HD74HC298	
	Motorola	MC74HC298	
	SGS	M74HC298	
	TI	SN74HC298	
	Universal	US74HC298	
SP74HC30	Hitachi	HD74HC30	
	Motorola	**MC74HC30**	1122
	National	MM74HC30	
	RCA	**CD74HC30**	1149
	SGS	M74HC30	
	Signetics	**74HC30**	1156
	TI	SN74HC30	
	Universal	US74HC30	
SP74HC32	Hitachi	HD74HC27	
		HD74HC32	
	Motorola	**MC74HC32**	1122
	National	MM74HC32	
	RCA	**CD74HC32**	1149
	SGS	M74HC32	
	Signetics	**74HC32**	1156
	TI	SN74HC32	
	Toshiba	**TC40H032**	1363
	Universal	US74HC32	
SP74HC365	Hitachi	HD74HC365	
	Motorola	**MC74HC365**	1124
	National	MM74HC365	
	RCA	**CD74HC365**	1149
	SGS	M74HC365	
	TI	SN74HC365	
	Universal	US74HC365	
SP74HC366	Hitachi	HD74HC366	
	Motorola	**MC74HC366**	1124
	National	MM74HC366	
	RCA	**CD74HC366**	1149
	SGS	M74HC366	
	Signetics	**74HC366**	1158
	TI	SN74HC366	
	Universal	US74HC366	
SP74HC367	Hitachi	HD74HC367	
	Motorola	**MC74HC367**	1124
	National	MM74HC367	
	Nitron	NC74HC367	
	RCA	**CD74HC367**	1149
	SGS	M74HC367	
			(Continued)
SP74HC367	**Signetics**	**74HC367**	1158
	TI	SN74HC367	
	Universal	US74HC367	
SP74HC373	Hitachi	HD74HC373	
	Mitel	MD74HC373	
	Motorola	**MC74HC373**	1126
	National	MM74HC373	
	Nitron	NC74HC373	
	RCA	**CD74HC373**	1150
	SGS	M74HC373	
	Signetics	**74HC373**	1158
	SSS	SS74HC373	
	Supertex	SI74HC373	
	TI	SN74HC373	
	Universal	US74HC373	
	Zytrex	ZX74HC373	
SP74HC374	Hitachi	HD74HC374	
	Mitel	MD74HC374	
	Motorola	**MC74HC374**	1126
	National	MM74HC374	
	Nitron	NC74HC374	
	RCA	**CD74HC374**	1149
	SGS	M74HC374	
	Signetics	**74HC374**	1158
	SSS	SS74HC374	
	TI	SN74HC374	
	Universal	US74HC374	
	Zytrex	ZX74HC374	
SP74HC390	Hitachi	HD74HC390	
	Motorola	**MC74HC390**	1127
	National	MM74HC390	
	RCA	**CD74HC390**	1150
	SGS	M74HC390	
	Signetics	**74HC390**	1158
	TI	SN74HC390	
	Universal	US74HC390	
SP74HC393	Hitachi	HD74HC393	
	Motorola	**MC74HC393**	1127
	National	MM74HC393	
	Nitron	NC74HC393	
	RCA	**CD74HC393**	1150
	SGS	M74HC393	
	Signetics	**74HC393**	1158
	TI	SN74HC393	
	Universal	US74HC393	
SP74HC4002	**Motorola**	**MC74HC4002**	1123
	National	MM74HC4002	
	RCA	**CD74HC4002**	1149
	SGS	M74HC4002	
	Signetics	**74HC4002**	1160
	TI	SN74HC4002	
	Universal	US74HC4002	
SP74HC4017	**Motorola**	**MC74HC4017**	1128
	National	MM74HC4017	
	RCA	**CD74HC4017**	1150
	SGS	M74HC4017	
	Signetics	**74HC4017**	1160
	TI	SN74HC4017	
	Universal	US74HC4017	
SP74HC4020	Hitachi	HD74HC4020	
	Motorola	**MC74HC4020**	1128
	National	MM74HC4020	
	RCA	**CD74HC4020**	1150
	SGS	M74HC4020	
	Signetics	**74HC4020**	1160
	TI	SN74HC4020	
	Universal	US74HC4020	
SP74HC4040	Hitachi	HD74HC4040	
	Motorola	**MC74HC4040**	1128
	National	MM74HC4040	
	RCA	**CD74HC4040**	1150
	SGS	M74HC4040	
	Signetics	**74HC4040**	1160
	TI	SN74HC4040	
	Universal	US74HC4040	
SP74HC4075	**Motorola**	**MC74HC4075**	1122
	National	MM74HC4075	
	RCA	**CD74HC4075**	1149
	Signetics	**74HC4075**	1161
	TI	SN74HC4075	
	Toshiba	**TC74HC4075**	1363
SP74HC4078	**Motorola**	**MC74HC4078**	1123
	National	MM74HC4078	
	SGS	M74HC4078	
	TI	SN74HC4078A	
	Toshiba	**TC74HC4078**	1363
	Universal	US74HC4078	
SP74HC42	Hitachi	HD74HC42	
	Motorola	**MC74HC42**	1130
	National	MM74HC42	
	Nitron	NC74HC42	
	RCA	**CD74HC42**	1150
			(Continued)
SP74HC42	SGS	M74HC42	
	Signetics	**74HC42**	1156
	TI	SN74HC42	
	Universal	US74HC42	
SP74HC533	Hitachi	HD74HC533	
	Motorola	**MC74HC533**	1126
	National	MM74HC533	
	RCA	**CD74HC533**	1150
	SGS	M74HC533	
	Signetics	**74HC533**	1159
	SSS	SS74HC533	
	TI	SN74HC533	
	Universal	US74HC533	
SP74HC534	Hitachi	HD74HC534	
	Motorola	**MC74HC534**	1127
	National	MM74HC534	
	RCA	**CD74HC534**	1149
	SGS	M74HC534	
	Signetics	**74HC534**	1159
	SSS	SS74HC534	
	TI	SN74HC534	
	Universal	US74HC534	
SP74HC540	**Motorola**	**MC74HC540**	1125
SP74HC541	**Motorola**	**MC74HC541**	1125
SP74HC563	Hitachi	HD74HC563	
	Motorola	**MC74HC563**	1126
	National	MM74HC563	
	RCA	**CD74HC563**	1150
	SGS	M74HC563	
	Signetics	**74HC563**	1159
	SSS	SS74HC563	
	TI	SN74HC563	
	Universal	US74HC563	
SP74HC573	Hitachi	HD74HC573	
	Motorola	**MC74HC573**	1126
	National	MM74HC573	
	RCA	**CD74HC573**	1150
	SGS	M74HC573	
	Signetics	**74HC573**	1159
	SSS	SS74HC573	
	TI	SN74HC573	
	Toshiba	**TC74HC573**	1363
	Universal	US74HC573	
SP74HC574	Hitachi	HD74HC574	
	Motorola	**MC74HC574**	1127
	National	MM74HC574	
	RCA	**CD74HC574**	1149
	SGS	M74HC574	
	Signetics	**74HC574**	1159
	SSS	SS74HC574	
	TI	SN74HC574	
	Universal	US74HC574	
SP74HC73	Hitachi	HD74HC73	
	Motorola	**MC74HC73**	1126
	National	MM74HC73	
	RCA	**CD74HC73**	1149
	SGS	M74HC73	
	Signetics	**74HC73**	1156
	TI	SN74HC73	
	Toshiba	**TC74HC73**	1363
	Universal	US74HC73	
SP74HC74	Hitachi	HD74HC74	
	Motorola	**MC74HC74**	1126
	National	MM74HC74	
	Nitron	NC74HC74	
	RCA	**CD74HC74**	1149
	SGS	M74HC74	
	Signetics	**74HC74**	1156
	TI	SN74HC74	
	Toshiba	**TC40H074**	1363
	Universal	US74HC74	
SP74HC75	Hitachi	HD74HC75	
	Motorola	**MC74HC75**	1126
	National	MM74HC75	
	RCA	**CD74HC75**	1150
	SGS	M74HC75	
	Signetics	**74HC75**	1156
	TI	SN74HC75	
	Toshiba	**TC74HC75**	1363
	Universal	US74HC75	
SP74HC76	Hitachi	HD74HC76	
	Motorola	**MC74HC76**	1126
	National	MM74HC76	
	SGS	M74HC76	
	Signetics	74HC76	
	TI	SN74HC76	
	Toshiba	**TC40H076**	1363
	Universal	US74HC76	
SP74HC77	Hitachi	HD74HC77	
	National	MM74HC77	
	RCA	CD74HC77	
			(Continued)

◆ Discontinued

The manufacturers report their devices can be used as direct replacements.
Performance details often differ, so compare the specifications considering your requirements.

Semi Processes Inc. (Cont'd)

Manufacturer Device	Replacement Source	Device	IC Master Page
SP74HC77	TI	SN74HC77	
	Toshiba	**TC74HC77**	1363
SP74HC85	**Motorola**	**MC74HC85**	1131
	National	MM74HC85	
	RCA	**CD74HC85**	1150
	SGS	M74HC85	
	Signetics	**74HC85**	1156
	TI	SN74HC85	
	Universal	US74HC85	
SP74HC86N	Hitachi	HD74HC86	
	Motorola	**MC74HC86**	1123
	National	MM74HC86	
	RCA	**CD74HC86**	1149
	SGS	M74HC86	
	Signetics	**74HC86**	1156
	TI	SN74HC86	
	Universal	US74HC86	
SP74HC93	Nitron	NC74HC93	
SP74HCT138	CTI	74HCT138	
	IDT	IDT74HCT138	
	Mitel	MD74HCT138	
	Motorola	MC74HCT138	
	Nitron	NC74HCT138	
	Plessey	MV74HCT138	
	RCA	**CD74HCT138**	1150
	SGS	M74HCT138	
	Signetics	**74HCT138**	1157
	SSS	SS74HCT138	
	TI	SN74HCT138	
	Toshiba	**TC74HCT138**	1363
	Zytrex	ZX74HCT138-2	
SP74HCT139	IDT	IDT74HCT139	
	Mitel	MD74HCT139	
	Nitron	NC74HCT139	
	Plessey	MV74HCT139	
	Signetics	**74HCT139**	1157
	Universal	US74HCT139	
	Zytrex	ZX74HCT139-2	
SP74HCT240	CTI	74HCT240	
	Hitachi	HD74HCT240	
	Micrel	MIC74HCT240	
	MicroTech	74HCTR240	
	Mitel	MD74HCT240	
	Motorola	MC74HCT240	
	National	MM74HCT240	
	Nitron	NC74HCT240	
	Plessey	MV74HCT240	
	RCA	**CD74HCT240**	1149
	SGS	M74HCT240	
	Signetics	**74HCT240**	1157
	SSS	SS74HCT240	
	Supertex	SI74HCT240	
	TI	SN74HCT240	
	Toshiba	**TC74HCT240**	1363
	Universal	US74HCT240	
	Zytrex	ZX74HCT240-2	
SP74HCT241	CTI	74HCT241	
	Hitachi	HD74HCT241	
	Micrel	MIC74HCT241	
	MicroTech	74HCTR241	
	Mitel	MD74HCT241	
	Motorola	MC74HCT241	
	National	MM74HCT241	
	Nitron	NC74HCT241	
	Plessey	MV74HCT241	
	RCA	**CD74HCT241**	1149
	SGS	M74HCT241	
	Signetics	**74HCT241**	1157
	SSS	SS74HCT241	
	Supertex	SI74HCT241	
	TI	SN74HCT241	
	Toshiba	**TC74HCT241**	1363
	Universal	US74HCT241	
	Zytrex	ZX74HCT241-2	
SP74HCT244	CTI	74HCT244	
	Hitachi	HD74HCT244	
	Micrel	MIC74HCT244	
	MicroTech	74HCTR244	
	Mitel	MD74HCT244	
	Motorola	MC74HCT244	
	National	MM74HCT244	
	Nitron	NC74HCT244	
	Plessey	MV74HCT244	
	RCA	**CD74HCT244**	1149
	SGS	M74HCT244	
	Signetics	**74HCT244**	1158
	SSS	SS74HCT244	
	Supertex	SI74HCT244	
	TI	SN74HCT244	
	Toshiba	**TC74HCT244**	1363

(Continued)

Manufacturer Device	Replacement Source	Device	IC Master Page
SP74HCT244	Universal	US74HCT244	
	Zytrex	ZX74HCT244-2	
SP74HCT245	CTI	74HCT245	
	GTEMicro	G74SC245	
	Hitachi	HD74HCT245	
	Micrel	MIC74HCT245	
	MicroTech	74HCTR245	
	Mitel	MD74HCT245	
	Motorola	MC74HCT245	
	National	MM74HCT245	
	Plessey	MV74HCT245	
		MV74SC245	
	RCA	**CD74HCT245**	1149
	SGS	M74HCT245	
	Signetics	**74HCT245**	1158
	SSS	SS74HCT245	
	TI	SN74HCT245	
	Toshiba	**TC74HCT245**	1363
	Universal	US74HCT245	
SP74HCT373	CTI	74HCT373	
	GTEMicro	G74SC373	
	Hitachi	HD74HCT373	
	Micrel	MIC74HCT373	
	MicroTech	74HCTR373	
	Mitel	MD74HCT373	
	Motorola	MC74HCT373	
	National	MM74HCT373	
	Nitron	NC74HCT373	
	Plessey	MV74HCT373	
		MV74SC373	
	RCA	**CD74HCT373**	1150
	SGS	M74HCT373	
	Signetics	**74HCT373**	1158
	SSS	SS74HCT373	
	Supertex	SI74HCT373	
	TI	SN74HCT373	
	Toshiba	**TC74HCT373**	1363
	Universal	US74HCT373	
	Zytrex	ZX74HCT373-2	
SP74HCT374	CTI	74HCT374	
	GTEMicro	G74SC374	
	Hitachi	HD74HCT374	
	Micrel	MIC74HCT374	
	MicroTech	74HCTR374	
	Mitel	MD74HCT374	
	Motorola	MC74HCT374	
	National	MM74HCT374	
	Nitron	NC74HCT374	
	Plessey	MV74HCT374	
		MV74SC374	
	RCA	CD74HCT374	
	SGS	M74HCT374	
	Signetics	**74HCT374**	1158
	SSS	SS74HCT374	
	Supertex	SI74HCT374	
	TI	SN74HCT374	
	Toshiba	**TC74HCT374**	1363
	Universal	US74HCT374	
	Zytrex	ZX74HCT374-2	
SP74HCT502	AMD	AM25L02	
SP74HCT503	AMD	AM25L03	
SP74HCT504	AMD	AM25L04	
SP74HCT533	AMD	74LS533	
SP74HCT540	CTI	74HCT540	
	Hitachi	HD74HCT540	
	Micrel	MIC74HCT540	
	MicroTech	74HCTR540	
	Mitel	MD74HCT540	
	Motorola	MC74HCT540	
	Plessey	MV74HCT540	
	RCA	**CD74HCT540**	1149
	SGS	M74HCT540	
	Signetics	**74HCT540**	1159
	SSS	SS74HCT540	
	TI	SN74HCT540	
	Toshiba	**TC74HCT540**	1363
	Universal	US74HCT540	
	Zytrex	ZX74HCT540-2	
SP74HCT541	CTI	74HCT541	
	Hitachi	HD74HCT541	
	Micrel	MIC74HCT541	
	MicroTech	74HCTR541	
	Mitel	MD74HCT541	
	Motorola	MC74HCT541	
	Plessey	MV74HCT541	
	RCA	**CD74HCT541**	1149
	SGS	M74HCT541	
	Signetics	**74HCT541**	1159
	SSS	SS74HCT541	
	TI	SN74HCT541	
	Toshiba	**TC74HCT541**	1363

(Continued)

Manufacturer Device	Replacement Source	Device	IC Master Page
SP74HCT541	Universal	US74HCT541	
	Zytrex	ZX74HCT541-2	
SP74HCT563	AMD	74LS563	
SP74HCT573	CTI	74HCT573	
	Hitachi	HD74HCT573	
	Micrel	MIC74HCT573	
	MicroTech	74HCTR573	
	Mitel	MD74HCT573	
	Motorola	MC74HCT573	
	RCA	**CD74HCT573**	1150
	SGS	M74HCT573	
	Signetics	**74HCT573**	1159
	SSS	SS74HCT573	
	TI	SN74HCT573	
	Toshiba	TC74HCT573	
	Universal	US74HCT573	
SP74HCT574	CTI	74HCT574	
	Hitachi	HD74HCT574	
	MicroTech	74HCTR574	
	Mitel	MD74HCT574	
	Motorola	MC74HCT574	
	Plessey	MV74HCT574	
	RCA	CD74HCT574	
	SGS	M74HCT574	
	Signetics	**74HCT574**	1159
	SSS	SS74HCT574	
	TI	SN74HCT574	
	Toshiba	**TC74HCT574**	1363
	Universal	US74HCT574	
		US75HCT574	
SP810H8	MMI	HAL10H8C	
	Zytrex	ZX-CAL10H8	
SP810L8	MMI	HAL10L8C	
	Zytrex	ZX-CAL10L8	
SP812H6	MMI	HAL12H6C	
	Zytrex	ZX-CAL12H6C	
SP812L6	MMI	HAL12L6C	
	Zytrex	ZX-CAL12L6	
SP814H4	MMI	HAL14H4C	
	Zytrex	ZX-CAL-14H4	
SP814L4	MMI	HAL14L4C	
	Zytrex	ZX-CAL14L4	
SP816C1	MMI	HAL16C1	
SP816H2	MMI	HAL-16H2	
SP816L2	MMI	HAL16L2C	

SGS Semiconductor

Manufacturer Device	Replacement Source	Device	IC Master Page
574LS196	**Fairchild**	**74LS196**	5311
	Hitachi	HD74LS196	
	Motorola	**SN74LS196**	1127
	National	DM74LS196	
	Panasonic	DN74LS196	
	Signetics	N82S80	
	TI	SN74LS196	
CA3046	Fairchild	UA3046	
	Motorola	**MC3346**	3614
	National	LM3046	
	Plessey	SL3046	
		SL3146	
	RCA	**CA3046**	3678
		CA3146	3678
	Sanyo	LA3046	
	SGS	TBA331	
	SiliconG	SG3046	
		SG3146	
		SG3821	
	Sprague	ULN-2046	
	ThomsonCSF	SFC	
HCC/CFH4503	Fairchild	F40097B	
	Motorola	MC14503	
		MC14503B	
	National	CD4503	
	RCA	CD4503	
HCC/HCF4000	Motorola	MC14000	
	National	CD4000	
	RCA	CD4000	
	Signetics	HEF400	
	Solitron	CM4000	
	SSS	SCL4000	
HCC/HCF4001	Fairchild	F4001	
	Motorola	MC14001	
	National	CD4001	
		MM74C02	
	OKI	MSM4001	
	RCA	CD4001	
	Sanyo	LC4001B	
	Signetics	HEF4001	
	Solitron	CM4001	
	SSS	SCL4001	
	Toshiba	TC4001	
HCC/HCF4002	Fairchild	F4002	
	Motorola	MC14002	
	National	CD4002	
	RCA	CD4002	
	Signetics	HEF4002	
	Solitron	CM4002	
	SSS	SCL4002	
	Toshiba	TC4002	
HCC/HCF4006	Fairchild	F4006	
	National	CD4006	
	RCA	CD4006	
	Signetics	HEF4006	
	Solitron	CM4006	
	SSS	SCL4006	
	Toshiba	TC4006	
HCC/HCF4007	Fairchild	F4007	
	Motorola	MC14007	
	National	CD4007	
	RCA	CD4007	
	Signetics	HEF4007	
	Solitron	CM4007	
	SSS	SCL4007	
	Toshiba	TC4007	
HCC/HCF4008	Fairchild	F4008	
	Motorola	MC14008	
	National	CD4008	
		MM74C83	
	RCA	CD4008	
	Signetics	HEF4008	
	Solitron	CM4008	
	SSS	SCL4008	
	Toshiba	TC4008	
HCC/HCF4009	National	CD4009	
	RCA	CD4009	
	Solitron	CM4009	
	SSS	SCL4009	
	Toshiba	TC4009	
HCC/HCF4010	National	CD4010	
	RCA	CD4010	
	Solitron	CM4010	
	SSS	SCL4010	
	Toshiba	TC4010	
HCC/HCF40100	RCA	CD40100	
HCC/HCF40101	Fairchild	F4531	
	Motorola	MC14531	
	RCA	CD40101	
	Signetics	HEF4531	
	SSS	SCL4531	
	Toshiba	TC4531	
HCC/HCF40102	RCA	CD40102	
HCC/HCF40103	RCA	CD40103	
HCC/HCF40104	RCA	CD40104	
HCC/HCF40105	RCA	CD40105	
HCC/HCF40106	Fairchild	F40014	
	Motorola	MC14584	
	National	CD40106	
		CD4584	
		MM54C14	
		MM74C14	
	RCA	CD40106	
	Signetics	HEF40106	
	SSS	SCL4584	
HCC/HCF40107	RCA	CD40107	
	Toshiba	**TC40107**	1363
HCC/HCF40108	Motorola	MC14580	
	RCA	CD40108	
HCC/HCF4011	Fairchild	F4011	
	Motorola	MC14011	
	National	CD4011	
		MM74C00	
	OKI	MSM4011	
	RCA	CD4011	
	Sanyo	LC4011	
	Signetics	HEF4011	
	Solitron	CM4011	
	SSS	SCL4011	
	Toshiba	TC4011	
HCC/HCF40110	Cypress	CY7C264	
	RCA	CD40110	
	Signetics	**N82HS641**	4167
HCC/HCF4012	Fairchild	F4012	
	Motorola	MC14012	
	National	CD4012	
	RCA	CD4012	
	Signetics	HEF4012	
	Solitron	CM4012	
	SSS	SCL4012	
	Toshiba	TC4012	
HCC/HCF4013	Fairchild	F4013	
	Motorola	MC14013	
	National	CD4013	
		MM74C74	

(Continued)

◆ Discontinued

Bold face device numbers indicate manufacturers data is provided in the IC Master on the pages noted.

SGS Semiconductor (Cont'd)

Manufacturer Device	Replacement Source	Device	IC Master Page
HCC/HCF4013	OKI	MSM4013	
	RCA	CD4013	
	Sanyo	LC4013	
	Signetics	HEF4013	
	Solitron	CM4013	
	SSS	SCL4013	
	Toshiba	TC4013	
HCC/HCF4014	Fairchild	F4014	
	Motorola	MC14014	
	National	CD4014	
	RCA	CD4014	
	Signetics	HEF4014	
	Solitron	CM4014	
	SSS	SCL4014	
	Toshiba	TC4014	
HCC/HCF4015	Fairchild	F4015	
	Motorola	MC14015	
	National	CD4015	
		MM74C164	
	OKI	MSM4015	
	RCA	CD4015	
	Sanyo	LC4015	
	Signetics	HEF4015	
	Solitron	CM4015	
	SSS	SCL4015	
	Toshiba	TC4015	
HCC/HCF4016	Fairchild	F4016	
		F4066	
	Motorola	MC14016	
		MC14066	
	National	CD4016	
		CD4066	
	RCA	CD4016	
		CD4066	
	Sanyo	LC4016	
		LC4066	
	SGS	HCC/HCF4066	
	Signetics	HEF4016	
		HEF4066	
	Solitron	CM4016	
		CM4066	
		HCF4016	
	SSS	SCL4016	
		SCL4066	
	Toshiba	TC4016	
		TC4066	
HCC/HCF4017	Fairchild	F4017	
	Motorola	MC14017	
	National	CD4017	
	RCA	CD4017	
	Signetics	HEF4017	
	Solitron	CM4017	
	SSS	SCL4017	
	Toshiba	TC4017	
HCC/HCF4018	Fairchild	F4018	
	Motorola	MC14018	
	National	CD4018	
	RCA	CD4018	
	Signetics	HEF4018	
	Solitron	CM4018	
	SSS	SCL4018	
	Toshiba	TC4018	
HCC/HCF40181	Motorola	MC14581	
	National	74C181	
	RCA	CD40181	
		CD4057	
	SSS	SCL4581	
HCC/HCF40182	Fairchild	F4582	
	Motorola	MC14582	
	National	74C182	
	RCA	CD40182	
	SSS	SCL4582	
HCC/HCF4019	Fairchild	F4019	
	National	CD4019	
	OKI	MSM4019	
	RCA	CD4019	
	Sanyo	LC4019	
	Signetics	HEF4019	
	Solitron	CM4019	
	SSS	SCL4019	
	Toshiba	TC4019	
HCC/HCF40192	Fairchild	F4029	
	Motorola	MC14029	
	National	CD40192	
		CD4029	
	RCA	CD40192	
		CD4029	
	SGS	HCC/HCF4029	
	Signetics	HEF40192	
	Solitron	CM4029	

(Continued)

Manufacturer Device	Replacement Source	Device	IC Master Page
HCC/HCF40192	SSS	SCL4029	
		SCL4192	
	Toshiba	TC40192	
		TC4029	
HCC/HCF40193	Fairchild	F40193	
	National	CD40193	
		MM54C193	
		MM74C193	
	RCA	CD40193	
	Signetics	HEF40193	
	SSS	SCL4193	
	Toshiba	**TC40193**	**1363**
HCC/HCF40194	Fairchild	F40194	
	Motorola	MC14194	
	RCA	CD40194	
	Signetics	HEF40194	
HCC/HCF4020	Fairchild	F4020	
	Motorola	MC14020	
	National	CD4020	
	RCA	CD4020	
	Signetics	HEF4020	
	Solitron	CM4020	
	SSS	SCL4020	
	Toshiba	TC4020	
HCC/HCF40208	RCA	CD40208	
HCC/HCF4021	Fairchild	F4021	
	Motorola	MC14021	
	National	CD4021	
	RCA	CD4021	
	Signetics	HEF4021	
	SSS	SCL4021	
	Toshiba	TC4021	
HCC/HCF4022	Fairchild	F4022	
	Motorola	MC14022	
	National	CD4022	
	RCA	CD4022	
	Signetics	HEF4022	
	Solitron	CM4022	
	SSS	SCL4022	
	Toshiba	TC4022	
HCC/HCF4023	Fairchild	F4023	
	Motorola	MC14023	
	National	CD4023	
		MM74C10	
	RCA	CD4023	
	Signetics	HEF4023	
	Solitron	CM4023	
	SSS	SCL4023	
	Toshiba	TC4023	
HCC/HCF4024	Fairchild	F4024	
	Motorola	MC14024	
	National	CD4024	
	RCA	CD4024	
	Signetics	HEF4024	
	Solitron	CM4024	
	SSS	SCL4024	
	Toshiba	TC4024	
HCC/HCF4025	Fairchild	F4025	
	Motorola	MC14025	
	National	CD4025	
	RCA	CD4025	
	Signetics	HEF4025	
	Solitron	CM4025	
	SSS	SCL4025	
	Toshiba	TC4025	
HCC/HCF40257	RCA	CD40257	
HCC/HCF4026	RCA	CD4026	
	Solitron	CM4026	
	SSS	SCL4026	
HCC/HCF4027	Fairchild	F4027	
	Motorola	MC14027	
	National	CD4027	
		MM74C76	
	OKI	MSM4027	
	RCA	CD4027	
	Sanyo	LC4027	
	Signetics	HEF4027	
	Solitron	CM4027	
	SSS	SCL4027	
HCC/HCF4028	Fairchild	F4028	
	Motorola	MC14028	
	National	CD4028	
		MM74C42	
	OKI	MSM4028	
	RCA	CD4028	
	Sanyo	LC4028	
	Signetics	HEF4028	
	Solitron	CM4028	
	SSS	SCL4028	
	Toshiba	TC4028	
HCC/HCF4029	Fairchild	F4029	
	Motorola	MC14029	

(Continued)

Manufacturer Device	Replacement Source	Device	IC Master Page
HCC/HCF4029	National	CD40192	
		CD4029	
	RCA	CD40192	
		CD4029	
	SGS	HCC/HCF40192	
	Signetics	HEF40192	
	Solitron	CM4029	
	SSS	SCL4029	
		SCL4192	
	Toshiba	TC40192	
		TC4029	
HCC/HCF4030	Fairchild	F4030	
	National	CD4030	
	RCA	CD4030	
	Signetics	HEF4030	
	Solitron	CM4030	
	SSS	SCL4030	
	Toshiba	TC4030	
HCC/HCF4031	Fairchild	F4031	
	National	CD4031	
	RCA	CD4031	
	Signetics	HEF4731	
HCC/HCF4032	Motorola	MC14032	
	RCA	CD4032	
	Solitron	CM4032	
	Toshiba	TC4032	
HCC/HCF4033	RCA	CD4033	
	Solitron	CM4033	
	SSS	SCL4033	
HCC/HCF4034	Fairchild	F4034	
	Motorola	MC14034	
	National	CD4034	
	RCA	CD4034	
	Solitron	CM4034	
	SSS	SCL4034	
	Toshiba	TC4034	
HCC/HCF4035	Fairchild	F4035	
	Motorola	MC14035	
	RCA	CD4035	
	Signetics	HEF4035	
	Solitron	CM4035	
	Toshiba	TC4035	
HCC/HCF4038	Motorola	MC14038	
	RCA	CD4038	
	Solitron	CM4038	
	Toshiba	TC4038	
HCC/HCF4040	Fairchild	F4040	
	Motorola	MC14040	
	National	CD4040	
	RCA	CD4040	
	Signetics	HEF4040	
	Solitron	CM4040	
	SSS	SCL4040	
	Toshiba	TC4040	
HCC/HCF4041	Fairchild	F4041	
	National	CD4041	
	RCA	CD4041	
	Signetics	HEF4041	
	Solitron	CM4041	
	SSS	SCL4041	
HCC/HCF4042	Fairchild	F4042	
	Motorola	MC14042	
	National	CD4042	
	RCA	CD4042	
	Signetics	HEF4042	
	Solitron	CM4042	
	SSS	SCL4042	
	Toshiba	TC4042	
HCC/HCF4043	Motorola	MC14043	
	National	CD4043	
	RCA	CD4043	
	Signetics	HEF4043	
	Solitron	CM4043	
	SSS	SCL4043	
	Toshiba	TC4043	
HCC/HCF4044	Fairchild	F4044	
	Motorola	MC14044	
	National	CD4044	
	RCA	CD4044	
	Signetics	HEF4044	
	Solitron	CM4044	
	Toshiba	TC4044	
HCC/HCF4045	Fairchild	F4521	
	Motorola	MC14521	
	RCA	CD4045	
	Signetics	HEF4521	
	Solitron	CM4045	
	SSS	SCL4445	
	Toshiba	TC4521	
HCC/HCF4046	Fairchild	F4046	
	Motorola	MC14046	
	National	CD4046	

(Continued)

Manufacturer Device	Replacement Source	Device	IC Master Page
HCC/HCF4046	RCA	CD4046	
	Solitron	CM4046	
	SSS	SCL4046	
HCC/HCF4047	Fairchild	F4047	
	National	CD4047	
	RCA	CD4047	
	Signetics	HEF4047	
	Solitron	CM4047	
	SSS	SCL4047	
	Toshiba	TC4047	
HCC/HCF4048	National	CD4048	
	RCA	CD4048	
	Solitron	CM4048	
	SSS	SCL4402	
HCC/HCF4049	Fairchild	F4049	
	Motorola	MC14049	
	National	CD4049	
	OKI	MSM4049	
	RCA	CD4049	
	Sanyo	LC4049	
	Signetics	HEF4049	
	Solitron	CM4049	
	SSS	SCL4049	
	Toshiba	TC4049	
HCC/HCF4050	Fairchild	F4050	
	Motorola	MC14050	
	National	CD4050	
	RCA	CD4050	
	Signetics	HEF4050	
	Solitron	CM4050	
	SSS	SCL4050	
	Toshiba	TC4050	
HCC/HCF4051	Fairchild	F4051	
	Motorola	MC14051	
	National	CD4051	
	RCA	CD4051	
	Signetics	HEF4051	
	Solitron	CM4051	
	SSS	SCL4051	
	Toshiba	TC4051	
HCC/HCF4052	Fairchild	F4052	
	Motorola	MC14052	
	RCA	CD4052	
	Signetics	HEF4052	
HCC/HCF4053	Fairchild	F4053	
	Motorola	MC14053	
	National	CD4053	
	RCA	CD4053	
	Signetics	HEF4053	
	Solitron	CM4053	
	SSS	SCL4053	
	Toshiba	**TC4053B**	**1363**
HCC/HCF4054	RCA	CD4054	
	Toshiba	TC4054	
HCC/HCF4055	Mitel	MD4055	
	RCA	CD4055	
	Toshiba	TC4055	
HCC/HCF4060	Motorola	MC14060	
	National	CD4060	
	RCA	CD4060	
	Signetics	HEF4060	
	SSS	SCL4060	
HCC/HCF4063	RCA	CD4063	
	Toshiba	TC4063	
HCC/HCF4066	Fairchild	F4016	
		F4066	
	Motorola	MC14016	
		MC14066	
	National	CD4016	
		CD4066	
	RCA	CD4016	
		CD4066	
	Sanyo	LC4016	
		LC4066	
	SGS	HCC/HCF4016	
	Signetics	HEF4016	
		HEF4066	
	Solitron	CM4016	
		CM4066	
		HCF4016	
	SSS	SCL4016	
		SCL4066	
	Toshiba	TC4016	
		TC4066	
HCC/HCF4067	Fairchild	F4067	
	Motorola	MC14067	
	RCA	CD4067	
	Signetics	HEF4067	
HCC/HCF4068	Fairchild	F4068	
	Motorola	MC14068	
	RCA	CD4068	
	Signetics	HEF4068	

(Continued)

◆ Discontinued

The manufacturers report their devices can be used as direct replacements.
Performance details often differ, so compare the specifications considering your requirements.

SGS Semiconductor (Cont'd)

Manufacturer Device	Replacement Source	Device	IC Master Page
HCC/HCF4068	Solitron	CM4068	
	SSS	SCL4068	
	Toshiba	TC4068	
HCC/HCF4069	Fairchild	F4069	
	Motorola	MC14069	
	National	CD4069	
		MM54C04	
		MM74C04	
	OKI	MSM4069	
	RCA	CD4069	
	Sanyo	LC4069	
	Signetics	HEF4069	
	Solitron	CM4069	
	SSS	SCL4069	
		SCL4449	
	Toshiba	TC4069	
HCC/HCF4070	Fairchild	F4070	
	Motorola	MC14070	
	National	CD4070	
		MM74C86	
	RCA	CD4070	
	Signetics	HEF4070	
	Solitron	CM4070	
	SSS	SCL4070	
HCC/HCF4071	Fairchild	F4071	
	Motorola	MC14071	
	National	CD4071	
		MM74C32	
	OKI	MSM4071	
	RCA	CD4071	
	Sanyo	LC4071	
	Signetics	HEF4071	
	Solitron	CM4071	
	SSS	SCL4071	
	Toshiba	TC4071	
HCC/HCF4072	Fairchild	F4072	
	Motorola	MC14072	
	National	CD4072	
	RCA	CD4072	
	Signetics	HEF4072	
	SSS	SCL4072	
	Toshiba	TC4072	
HCC/HCF4073	Fairchild	F4073	
	Motorola	MC14073	
	National	CD4073	
	RCA	CD4073	
	Signetics	HEF4073	
	Solitron	CM4073	
	SSS	SCL4073	
	Toshiba	TC4073	
HCC/HCF4075	Fairchild	F4075	
	Motorola	MC14075	
	National	CD4075	
	RCA	CD4075	
	Signetics	HEF4075	
	Solitron	CM4075	
	SSS	SCL4075	
	Toshiba	TC4075	
HCC/HCF4076	Fairchild	F4076	
	Motorola	MC14076	
	National	CD4076	
		MM54C173	
		MM74C173	
	RCA	CD4076	
	Signetics	HEF4076	
	Solitron	CM4076	
	SSS	SCL4076	
	Toshiba	TC4076	
HCC/HCF4077	Fairchild	F4077	
	Motorola	MC14077	
	National	CD4077	
	RCA	CD4077	
	Signetics	HEF4077	
	Solitron	CM4077	
	SSS	SCL4077	
HCC/HCF4078	Fairchild	F4078	
	Motorola	MC14078	
	RCA	CD4078	
	Signetics	HEF4078	
	Solitron	CM4078	
	SSS	SCL4078	
	Toshiba	TC4078	
HCC/HCF4081	Fairchild	F4081	
	Motorola	MC14081	
	National	CD4081	
		MM74C08	
	OKI	MSM4081	
	RCA	CD4081	
	Sanyo	LC4081	
	Signetics	HEF4081	
HCC/HCF4081	Solitron	CM4081	
	SSS	SCL4081	
	Toshiba	TC4081	
HCC/HCF4082	Fairchild	F4082	
	Motorola	MC14082	
	National	CD4082	
	RCA	CD4082	
	Signetics	HEF4082	
	SSS	SCL4082	
	Toshiba	TC4082	
HCC/HCF4086	Motorola	MC14506B	
	RCA	**CD4086B**	**704,1145**
	Signetics	HEF4086B	
	SSS	SCL4086B	
HCC/HCF4089	National	CD4089	
	RCA	CD4089	
HCC/HCF4095	RCA	CD4095	
HCC/HCF4096	RCA	CD4096	
HCC/HCF4097	Fairchild	F4097	
	Motorola	MC14097	
	RCA	CD4097	
HCC/HCF4098	Fairchild	F4528	
	Motorola	MC14528	
	National	CD4528	
		MM74C221	
	RCA	CD4098	
	Signetics	HEF4528	
	SSS	SCL4528	
	Toshiba	TC4528	
HCC/HCF4502	Motorola	MC14502	
	RCA	CD4502	
	Signetics	HEF4502	
	SSS	SCL4502	
HCC/HCF4508	Motorola	MC14508	
	National	DM74147	
	RCA	CD4508	
	Signetics	**74147**	**1157**
		HEF4508	
		N82147	
	Solitron	CM4508	
	SSS	SCL4508	
	TI	SN74147	
	Toshiba	TC4508	
HCC/HCF4510	Fairchild	F4510	
	Motorola	MC14510	
	National	CD4510	
	RCA	CD4510	
	Signetics	HEF4510	
	Solitron	CM4510	
	SSS	SCL4510	
	Toshiba	TC4510	
HCC/HCF4511	Fairchild	F4511	
	Mitel	MD4511	
	MMI	4511	
	Motorola	MC14511	
	National	CD4511	
	NEC	µPD4511	
	RCA	CD4511	
	Signetics	HEF4511	
	Solitron	CM4511	
	SSS	SCL4511	
	Toshiba	TC4511	
HCC/HCF4512	Fairchild	F4512	
	Motorola	MC14512	
	National	CD4512	
	RCA	CD4512	
	SSS	SCL4512	
	Toshiba	TC4512	
HCC/HCF4514	Fairchild	F4514	
	Motorola	MC14514	
	National	CD4514	
	RCA	CD4514	
	Signetics	HEF4514	
	Solitron	CM4514	
	SSS	SCL4514	
	Toshiba	TC4514	
HCC/HCF4515	Fairchild	F4515	
	Motorola	MC14515	
	National	CD4515	
	RCA	CD4515	
	Signetics	HEF4515	
	Solitron	CM4515	
	SSS	SCL4515	
	Toshiba	TC4515	
HCC/HCF4516	Fairchild	F4516	
	Motorola	MC14516	
	National	CD4516	
	RCA	CD4516	
	Signetics	HEF4516	
	Solitron	CM4516	
	SSS	SCL4516	
	Toshiba	TC4516	
HCC/HCF4517	Motorola	MC14517	
	RCA	CD4517	
	Signetics	HEF4517	
	SSS	SCL4517	
HCC/HCF4518	Fairchild	F4518	
	Motorola	MC14518	
	National	CD4518	
	RCA	CD4518	
	Signetics	HEF4518	
	Solitron	CM4518	
	SSS	SCL4518	
	Toshiba	TC4518	
HCC/HCF4520	Fairchild	F4520	
	Motorola	MC14520	
	National	CD4520	
	OKI	MSM4520	
	RCA	CD4520	
	Sanyo	LC4520	
	Signetics	HEF4520	
	Solitron	CM4520	
	SSS	SCL4520	
	Toshiba	TC4520	
HCC/HCF4527	Fairchild	F4527	
	Motorola	MC14527	
	National	CD4527	
	RCA	CD4527	
	Signetics	HEF4527	
	SSS	SCL4527	
	Toshiba	TC4527	
HCC/HCF4532	Fairchild	F4532	
	Motorola	MC14532	
	RCA	CD4532	
	Signetics	HEF4532	
	SSS	SCL4532	
	Toshiba	TC4532	
HCC/HCF4555	Fairchild	F4555	
	Motorola	MC14555	
	RCA	CD4555	
	Signetics	HEF4555	
	SSS	SCL4555	
	Toshiba	TC4555	
HCC/HCF4556	Fairchild	F4556	
	Motorola	MC14556	
	RCA	CD4556	
	Signetics	HEF4556	
	SSS	SCL4556	
	Toshiba	TC4556	
HCC/HCF4585	Fairchild	F40085	
	Motorola	MC14585	
	National	MM74C85	
	RCA	CD4585	
	Signetics	HEF4585	
	SSS	SCL4585	
	Toshiba	TC4585	
L123	Fairchild	µA723	
	Hitachi	HA17723	
	Intersil	LM723	
	Motorola	**MC1723**	**3625**
	National	LM723	
	Raytheon	RC723	
		RM723	
	RCA	CA723	
		LM723	
	SGS	LM723	
	Signetics	**µA723**	**3721,3730**
	SiliconG	SG723	
	TI	µA723	
	ThomsonCSF	LM723	
L165	SiliconG	SG1173	
	Sprague	ULN-3751	
L201	Exar	XR2001	
		XR2001C	
		XR2201C	
	Mitsubishi	M54524	
	Motorola	**MC1411**	**3212**
		ULN2001	**3212**
	NEC	µPA2001	
	RIFA	PBD3523-11	
	Sanyo	LB1231	
	SGS	ULN2001	
	SiliconG	SG2001	
	Sprague	**ULN-2001**	**3269**
		ULQ-2001	
	TI	ULN2001A	
	Toshiba	TD62001	
		TD62101	
L202	Exar	XR2002C	
		XR2202C	
	Fairchild	MC1412	
	Mitsubishi	M54525	
	Motorola	**MC1412**	**3212**
		ULN2002	**3212**
L202	NEC	µPA2002	
	RIFA	PBD352304	
	Sanyo	LB1232	
	SGS	ULN2002	
	Signetics	NE5602	
	SiliconG	SG2002	
	Sprague	ULN-2002	
	TI	ULN2002A	
	Toshiba	TD62002	
L203	Exar	XR2003C	
		XR2203C	
	Fairchild	MC1413	
	Mitsubishi	M54523	
	Motorola	**MC1413**	**3212**
		ULN2003	**3212**
	NEC	µPA2003	
	RIFA	PBD352303	
	Sanyo	LB1233	
	SGS	ULN2003	
	Signetics	NE5603	
		ULN2003	**3721**
	SiliconG	SG2003	
	Sprague	ULN-2003	
	Telefunken	TDA2003	
	TI	ULN2003A	
	Toshiba	TD62003	
		TD62103	
L204	Exar	XR2204C	
	Mitsubishi	M54526	
	Motorola	**MC1416**	**3212**
		ULN2004	**3212**
	NEC	µPA2004	
	RIFA	PBD352302	
	Sanyo	LB1234	
	SGS	ULN2004	
	Signetics	NE5604	
		ULN2004	**3721**
	SiliconG	SG2004	
	Sprague	ULN-2004	
		ULS-2004	
	TI	ULN2004A	
	Toshiba	TD62004	
		TD62104	
L290B	SiliconG	L290B	
L291B	SiliconG	L291B	
L292	SiliconG	L292	
L293	**IPS**	**IP293**	**3599**
	Polycore	PL293	
L295	**Unitrode**	**L295**	**3741**
L296	Unitrode	L296	
L298	**Unitrode**	**L298**	**3741**
L601	Sprague	ULN-2821	
L602	Sprague	ULN-2822	
L603	Sprague	ULN-2823	
L604	Sprague	ULN-2824	
L702B	SGS	L702N	
	ThomsonCSF	L702B	
		L702SP	
L702N	SGS	L702B	
	ThomsonCSF	L702B	
		L702SP	
L7805	ThomsonCSF	µ78S05	
L7812	Fairchild	µA7812	
	IPS	**IP140-12**	**3599**
		IP340-12	**3599**
		IP7812	**3599**
	Lambda	LMC7812	
		LµA7812	
	Motorola	**MC7812**	**3623**
	National	LM7812	
	NEC	µPC7812	
	SiliconG	SG340-12	
		SG7812	
	TI	µA7812	
	Toshiba	TA78012	
	Samsung	MC7812	
	Unitrode	UC7812	
L7815	Fairchild	µA7815	
		µA78L15	
	IPS	**IP140-15**	**3599**
		IP340-15	**3599**
		IP7815	**3599**
	Lambda	LAS1515	
		LMC7815	
		LµA7815	
	Motorola	**MC7815**	**3624**
		MC78L15	
	National	LM340-15	
		LM340LA-15	
		LM340T-15	
		LM7815	
		LM78L15	

(Continued)

◆ Discontinued

Bold face device numbers indicate manufacturers data is provided in the IC Master on the pages noted.

SGS Semiconductor (Cont'd)

Manufacturer Device	Replacement Source	Device	IC Master Page
L7815	NEC	µPC7815	
		µPC78L15	
	SiliconG	SG340-15	
		SG7815	
	TI	LM340-15	
		µA7815	
		µA78L15	
	ThomsonCSF	µA7815	
	Toshiba	TA78015	
	Samsung	MC7815	
	Unitrode	UC7815	
L7818	**Motorola**	**MC7818**	**3624**
	Samsung	MC7818	
L7824	Lambda	LMC7824	
		LµA7824	
	Motorola	**MC7824**	**3624**
	NEC	µPC7824	
	SiliconG	SG7824	
	TI	LM340-24	
		µA7824	
	ThomsonCSF	µA7824	
	Samsung	MC7824	
L78515	ThomsonCSF	µ78515	
L78M05CV	Fairchild	µA78M05	
	Motorola	MC78M05	
	National	LM341-5	
		LM342-05	
		LM78M05	
	NEC	µPC78M05	
	Sanyo	L78M05	
	TI	µA78M05	
	Samsung	MC78M05	
L78M06CV	Fairchild	µA78M06	
	Motorola	MC78M06	
	Sanyo	L78M06	
	TI	µA78M06	
	Samsung	MC78M06	
L78M08CV	Fairchild	µA78M08	
	Motorola	MC78M08	
	NEC	µPC78M08	
	Sanyo	L78M08	
	TI	µA78M08	
	Samsung	MC78M08	
L78M12CV	Fairchild	µA78M12	
	Motorola	MC78M12	
	National	LM341-12	
		LM342-12	
		LM78M12	
	NEC	µPC78M12	
	Sanyo	L78M12	
	Samsung	MC78M12	
L78M15CV	Fairchild	µA78M15	
	Motorola	MC78M15	
	National	LM341-15	
		LM342-15	
		LM78M15	
	NEC	µPC78M15	
	Sanyo	L78M15	
	Samsung	MC78M15	
L78M24CV	Fairchild	µA78M24	
	Motorola	MC78M24	
	Sanyo	L78M24	
	TI	µA78M24	
	Samsung	MC78M24	
L78S09	ThomsonCSF	µ78S09	
L78S12	ThomsonCSF	µ78S12	
L7905	Fairchild	MC7905	
	Lambda	LMC7905	
	Motorola	MC7905	
	SiliconG	SG7905	
	Samsung	MC7905	
L7908	Fairchild	MC7908	
		µA7908	
		µA79M08	
	Lambda	LMC7908	
		LµA7908	
	Motorola	MC7908	
	SiliconG	SG7908	
	TI	µA7908	
		µA79M08	
	Samsung	MC7908	
L7912	Fairchild	µA7912	
		µA79M12	
	IPS	**IP320-12**	**3599**
		IP7912	**3599**
	Motorola	MC7912	
	National	LM320MP12	
		LM7912	
		LM79M12	
	NEC	µPC7912	
L7912	SiliconG	SG320P-12	
		SG7912	
	TI	LM320-12	
		µA7912	
	ThomsonCSF	µA7912	
	Samsung	MC7912	
	Unitrode	UC7912	
L7915	Fairchild	µA7915	
	IPS	**IP320-15**	**3599**
		IP7915	**3599**
	Motorola	MC7915	
	National	LM320-15	
		LM320T15	
		LM7915	
	NEC	µPC7915	
	SiliconG	SG320-15	
		SG7915	
	TI	LM320-5	
		µA7915	
	ThomsonCSF	µA7915	
	Samsung	MC7915	
	Unitrode	UC7915	
L7918	Motorola	MC7918	
	SiliconG	SG7918	
	TI	µA7918	
	Samsung	MC7918	
L7924	**Fairchild**	**74LS195A**	**5311**
	Hitachi	HD74LS195A	
	Motorola	**SN74LS195A**	**1128**
	National	DM74LS195	
	Panasonic	DN74LS195A	
	SGS	T74LS195A	
	Signetics	**74LS195A**	**1157**
	TI	SN74LS195A	
L7952	**IPS**	**IP120-5**	**3599**
	Motorola	MC7952	
	National	LM320-5	
	SiliconG	SG320-5	
	TI	LM320-5	
	ThomsonCSF	TDB2905	
LM2901	Cypress	CY7C901	
	Fairchild	µA2901	
		µA3302	
	Motorola	**LM2901**	**3631**
		MC3302	**3631**
	National	LM2901	
		LM3302	
	NEC	µPC2901	
	PMI	CMP-04	
	Raytheon	LM2901	
		RC3302	
	RCA	CA3302	
	SGS	MC3302	
	Signetics	**LM2901**	**3721,3722**
		MC3302	**3721**
	SiliconG	SG324A	
	TI	LM2901	
		LM3302	
	ThomsonCSF	LM2901	
LM2902	Fairchild	µA2902	
	Hitachi	HA17902	
	Motorola	**LM2902**	**3618**
	National	LM2902	
	NEC	µPC2902	
	Raytheon	LM2902	
	TI	LM2902	
	ThomsonCSF	LM2902	
LM2903	AD	AD311	
	Fairchild	µA311	
	LinearTech	LM311	
	Motorola	**LM2903**	**3631**
		LM311	**3631**
	National	LM2903	
		LM311	
	NEC	µPC271	
		µPC311	
	Raytheon	LM311	
	RCA	**CA311**	**3672,3677**
		LM311	
	SGS	LM311	
	Signetics	**LM2903**	**3725**
		LM311	**3721**
	SiliconG	SG311	
	TI	LM2903	
		LM311	
	ThomsonCSF	LM2903	
		LM311	
		SFC3111	
LM2930	National	LM2930	
LM2931	National	LM2931	
LM3046	National	LM3046	
LM311	AD	AD311	
	Fairchild	µA311	
	LinearTech	LM311	
	Motorola	**LM2903**	**3631**
		LM311	**3631**
	National	LM2903	
		LM311	
	NEC	µPC271	
		µPC311	
	Raytheon	LM311	
	RCA	**CA311**	**3672,3677**
		LM311	
	SGS	LM2903	
	Signetics	**LM2903**	**3725**
		LM311	**3721**
	SiliconG	SG311	
	TI	LM2903	
		LM311	
	ThomsonCSF	LM2903	
		LM311	
		SFC3111	
LM317	Fairchild	µA317	
	IPS	**IP317**	**3599**
	LinearTech	LM317	
	MCE	MCE-LM317	
	Motorola	**LM317**	**3625**
	National	LM317	
	SiliconG	SG317	
	TI	LM317	
	ThomsonCSF	LM317	
		TDB0117	
	Unitrode	UC317	
LM324	National	LM324	
	ThomsonCSF	LM324	
	Samsung	**LM324**	**3679**
LM324A	National	LM324A	
	TI	LM324A	
	Samsung	**LM324A**	**3679**
LM339	AMD	LM339A	
	Fairchild	µA339	
	Hitachi	HA17901	
	Motorola	**LM339**	**3631**
	National	LM339	
	NEC	µPC339	
	PMI	CMP-04	
		PM339A	
	Raytheon	LM339	
	RCA	**CA339**	**3672,3677**
		CA339A	**3672,3677**
		LM339	
	TI	LM339	
	ThomsonCSF	LM339	
		TDB0139	
LM358	**Motorola**	**LM358**	**3617**
	National	LM358A	
	NEC	µPC358	
	RCA	**CA358A**	**3672**
		LM358	
	Sanyo	LA6358	
	Signetics	**LM358**	**3722,3729**
		NE532	**3729**
	TI	LM358	
	ThomsonCSF	LM358	
LM393	National	LM393	
LM723	Fairchild	µA723	
	Hitachi	HA17723	
	Intersil	LM723	
	Motorola	**MC1723**	**3625**
	National	LM723	
	Raytheon	RC723	
		RM723	
	RCA	CA723	
		LM723	
	SGS	L123	
	Signetics	**µA723**	**3721,3730**
	SiliconG	SG723	
	TI	µA723	
	ThomsonCSF	LM723	
LM741	MicroPwr	MPOP02	
	National	LM741	
	Plessey	SL562	
	PMI	**OP-02**	**3636**
	SGS	LS141	
	ThomsonCSF	µA741	
	Samsung	LM741	
LM748	National	LM748	
	SGS	LS148	
	SiliconG	SG201	
	TI	LM201	
		SN72748P	
		µA748	
LM748	ThomsonCSF	LM201	
		LM748	
LS141	MicroPwr	MPOP02	
	National	LM741	
	Plessey	SL562	
	PMI	**OP-02**	**3636**
	SGS	LM741	
	ThomsonCSF	µA741	
	Samsung	LM741	
LS148	National	LM748	
	SGS	LM748	
	SiliconG	SG201	
	TI	LM201	
		SN72748P	
		µA748	
	ThomsonCSF	LM201	
		LM748	
LS285A	Samsung	LS285A	
M108	AD	AD108	
	Fairchild	µA108	
	Harris	LM108	
	Intersil	**LM108**	**3600,3601**
	LinearTech	LM108	
	MicroPwr	**MP108**	**688,3607**
	Motorola	**LM108**	**3615**
	National	LM108	
	PMI	PM108	
	SiliconSys	**SSI108**	**3736**
	TI	LM108	
M145026	**Motorola**	**MC145026**	**3632**
◆M2102A	Fairchild	2102H	
	National	MM2102A	
	Panasonic	MN2102	
M22100	Motorola	MC1452100	
	RCA	**CD22100**	**1147,1152**
	SiliconSys	**SSI22100**	**3737**
M2332	AMD	AM9232	
	CSG	MPS2332	
	Fairchild	F3532	
	GI	R03-9332	
	GouldAMI	S2333	
		S68A332	
	GTEMicro	G2332	
	Hitachi	HN46332	
	Intech	IM7332	
	Intel	2332	
	Mitsubishi	M58333	
	Motorola	**MCM68A332**	**4120**
	National	NM52132	
	NCR	NCR2332	
	NEC	UPD2332A	
	Panasonic	MN2332	
	RCA	**CDM5333**	**1673,1677**
	Rockwell	R2332	
	Sharp	LH2332	
	Siemens	SA88332	
		SAB8332	
	Signetics	2332	
		2632A	
	SiliconG	SG3532	
	SSS	SCM23C32	
	SMC	ROM4732	
	Supertex	23SC32	
		CM3200	
	Synertek	SY2332	
	TI	TM2332	
		TMS2332	
		TMS4732	
	Toshiba	TMM2332	
		TMM333P	
	VTI	VT2332	
M2362	AMD	9264	
	GI	R03-9364	
	GouldAMI	S68A364	
	Hitachi	HN48364	
	Intech	IM7364	
	MicroPwr	MP2364C	
	Mitsubishi	M58334	
	Mostek	MK36000	
	Motorola	**MCM68364**	**4120**
		MCM68365	**4120**
		MCM68366	**4120**
	National	MM52164	
	NEC	UPD2364	
	Rockwell	R2364A	
	SGS	M36000	
	Signetics	2664	
		26S64	
	SSS	SCM23C64	
	SMC	ROM36000	

(Continued)

◆ Discontinued

The manufacturers report their devices can be used as direct replacements.
Performance details often differ, so compare the specifications considering your requirements.

SGS Semiconductor (Cont'd)

Manufacturer Device	Replacement Source	Device	IC Master Page
M2362	Synertek	SY2364/A	
	TI	TMS4764	
	Toshiba	TMM2366	
M2560	GouldAMI	S2560	
M2560A	GouldAMI	S2560A	
	S-MOS	STC2560C	
M2569	GouldAMI	S2569	
M27128	AMD	AM27128	
	Fujitsu	MBM27128	
	Hitachi	HM4827128	
	Intel	27128	
		27128A	**4074**
	Mitsubishi	M5L27128	
		M5L27C128	
	NEC	µPD27128	
	SEEQ	27128	
	TI	**TMS27C128**	**4210**
	Toshiba	TMM27128	
M2716	Hitachi	HN462716	
	National	MM2716	
	OKI	MSM2716	
	ThomsonCSF	ET2716	
M27256	AMD	AM27256	
	Fujitsu	MBM27256	
		MBM27C256	
	GI	R09256	
	Hitachi	HM4827256	
		HN27256	
		HN27C256	**4037**
	Intel	27256	
		27C256	**4079**
	Mitsubishi	M5L27256	
		MSL27256	
	Motorola	MCM67256	
	National	NMC27C256	
	NEC	MPD27256	
		UPD27256	
		UPD27C256	
		UPD27C256A	
	SEEQ	27256	
		27C256	
	SSS	SCM27C128	
	Toshiba	TC57256	
		TMM27256	
		TMM27C256	
	VTI	**VT27C256**	**4265,4273**
M2732A	AMD	AM2732	
	Hitachi	HN462732	
	Intel	2732	
		2732A	
		M2732	
	National	MM2732	
		NMC2732	
	Rockwell	R27C32	
	Toshiba	TMM324C	
M2764	AMD	AM2764	
	Fujitsu	MBM2764	
		MBM27C64	
	Hitachi	HM482764	
		HN2764	
		HN27C64	
		HN482764	
	Intel	2764	
		2764A	
		27C64	**4078**
		87C64	**4078**
	Mitsubishi	M5L2764	
	NEC	UPD2764	
		UPD27C64	
	OKI	MSM2764	
		MSM2764A	**4732**
		MSM27C64	
	Rockwell	R2764	
		R27C64	
		R87C64	
	S-MOS	SPM27C64	
	SEEQ	2764	
		5133	
	Signetics	27C64	
	SSS	SCM27C64	
	TI	TMS27C64	
	ThomsonCSF	ET2764	
	Toshiba	**TMM2764**	**4263**
M36000	AMD	9264	
	GI	R03-9364	
	GouldAMI	S68A364	
	Hitachi	HN48364	
	Intech	IM7364	
	MicroPwr	MP2364C	

(Continued)

Manufacturer Device	Replacement Source	Device	IC Master Page
M36000	Mitsubishi	M58334	
	Mostek	MK36000	
	Motorola	**MCM68364**	**4120**
		MCM68365	**4120**
		MCM68366	**4120**
	National	MM52164	
	NEC	UPD2364	
	Rockwell	R2364A	
	SGS	M2362	
	Signetics	2664	
		26S64	
	SSS	SCM23C64	
	SMC	ROM36000	
	Synertek	SY2364/A	
	TI	TMS4764	
	Toshiba	TMM2366	
M3870	Fairchild	F3870	
	Mostek	MK3870	
M3872	Fairchild	F3872	
◆M4027	Fairchild	M4027	
M5116	Fairchild	5116	
	Mostek	MK5116	
	National	TP5116	
M5156	CTI	MA556	
	Fairchild	5156	
	Mostek	MK5156	
	National	TP5156	
M5450	National	MM5450	
M5451	National	MM5451	
M5480	National	MM5480	
M5481	National	MM5481	
	SGS	SG2525A	
	SiliconG	SG2525A	
M5912	GTEMicro	G8912B	
	Harris	**HC5512**	**3596**
	Intel	2912	
		ID2912	
	National	TP3040	
	Plessey	MV8912	
	TI	TCM2912B	
M74HC00	Hitachi	HD74HC00	
	Motorola	**MC74HC00**	**1122**
	National	MM74HC00	
	RCA	**CD74HC00**	**1149**
	SPI	SP74HC00	
	Signetics	**74HC00**	**1156**
	TI	SN74HC00	
	Toshiba	**TC40H000**	**1363**
	Universal	US74HC00	
M74HC02	Hitachi	HD74HC02	
	Motorola	**MC74HC02**	**1122**
	National	MM74HC02	
	RCA	**CD74HC02**	**1149**
	SPI	SP74HC02	
	Signetics	**74HC02**	**1156**
	TI	SN74HC02	
	Toshiba	**TC40H002**	**1363**
	Universal	US74HC02	
M74HC03	**Motorola**	**MC74HC03**	**1122**
	National	MM74HC03	
	RCA	**CD74HC03**	**1149**
	TI	SN74HC03	
	Toshiba	**TC74HC03**	**1363**
	Universal	US74HC03	
M74HC04	Hitachi	HD74HC04	
	Motorola	**MC74HC04**	**1124**
	National	MM74HC04	
	RCA	**CD74HC04**	**1149**
	SPI	SP74HC04	
	TI	SN74HC04	
	Toshiba	**TC40H004**	**1363**
	Universal	US74HC04	
M74HC08	Hitachi	HD74HC08	
	Motorola	**MC74HC08**	**1122**
	National	MM74HC08	
	RCA	**CD74HC08**	**1149**
	SPI	SP74HC08	
	Signetics	**74HC08**	**1156**
	TI	SN74HC08	
	Universal	US74HC08	
M74HC10	Hitachi	HD74HC10	
	Motorola	**MC74HC10**	**1122**
	National	MM74HC10	
	RCA	**CD74HC10**	**1149**
	SPI	SP74HC10	
	Signetics	**74HC10**	**1156**
	SiliconG	SG75474	
	TI	SN74HC10	
	Toshiba	**TC40H010**	**1363**
	Universal	US74HC10	
M74HC107	Hitachi	HD74HC107	
	Motorola	**MC74HC107**	**1126**

(Continued)

Manufacturer Device	Replacement Source	Device	IC Master Page
M74HC107	National	MM74HC107	
	Nitron	NC74HC107	
	RCA	**CD74HC107**	**1149**
	SPI	SP74HC107	
	Signetics	**74HC107**	**1156**
	TI	SN74HC107	
	Toshiba	**TC40H107**	**1363**
	Universal	US74HC107	
M74HC109	Hitachi	HD74HC109	
		HD74HC14	
	Motorola	**MC74HC109**	**1126**
	National	MM74HC109	
	Nitron	NC74HC109	
	RCA	**CD74HC109**	**1149**
	SPI	SP74HC109	
	Signetics	**74HC109**	**1156**
	TI	SN74HC109	
	Toshiba	**TC74HC109**	**1363**
	Universal	US74HC109	
M74HC11	Hitachi	HD74HC11	
	Motorola	**MC74HC11**	**1122**
	National	MM74HC11	
	RCA	**CD74HC11**	**1149**
	SPI	SP74HC11	
	Signetics	**74HC11**	**1156**
	TI	SN74HC11	
	Toshiba	**TC40H011**	**1363**
	Universal	US74HC11	
M74HC112	Hitachi	HD74HC112	
	Motorola	**MC74HC112**	**1126**
	National	MM74HC112	
	RCA	**CD74HC112**	**1149**
	SPI	SP74HC112N	
	Signetics	**74HC112**	**1156**
	TI	SN74HC112	
	Universal	US74HC112	
M74HC113	Hitachi	HD74HC113	
	Motorola	**MC74HC113**	**1126**
	National	MM74HC113	
	SPI	SP74HC113	
	TI	SN74HC113	
	Universal	US74HC113	
M74HC123	Hitachi	HD74HC123	
	Motorola	MC74HC123	
	National	MM74HC123	
	Signetics	**74HC123**	**1157**
	TI	SN74HC123	
	Universal	US74HC123	
M74HC125	Hitachi	HD74HC125	
	Motorola	**MC74HC125**	**1124**
	National	MM74HC125	
	SPI	SP74HC125	
	TI	SN74HC125	
	Toshiba	**TC74HC125**	**1363**
	Universal	US74HC125	
M74HC126	Hitachi	HD74HC126	
	Motorola	**MC74HC126**	**1124**
	National	MM74HC126	
	SPI	SP74HC126	
	TI	SN74HC126	
	Toshiba	**TC74HC126**	**1363**
	Universal	US74HC126	
M74HC132	Hitachi	HD74HC132	
	Motorola	**MC74HC132**	**1125**
	National	MM74HC132	
	RCA	**CD74HC132**	**1149**
	SPI	SP74HC132	
	Signetics	**74HC132**	**1157**
	TI	SN74HC132	
	Universal	US74HC132	
M74HC133	**Motorola**	**MC74HC133**	**1122**
	National	MM74HC133	
	RCA	CD74HC133	
	SPI	SP74HC133	
	Signetics	74HC133	
	TI	SN74HC133	
	Universal	US74HC133	
M74HC137	Hitachi	HD74HC137	
	Motorola	MC74HC137	
	National	MM74HC137	
	SPI	SP74HC137	
	TI	SN74HC137	
	Toshiba	**TC74HC137**	**1363**
	Universal	US74HC137	
M74HC138	Hitachi	HD74HC138	
	Motorola	**MC74HC138**	**1130**
	National	MM74HC138	
	Nitron	NC74HC138	
	RCA	**CD74HC138**	**1150**
	SPI	SP74HC138	
	Signetics	**74HC138**	**1157**
	SSS	SS74HC138	

(Continued)

Manufacturer Device	Replacement Source	Device	IC Master Page
M74HC138	TI	SN74HC138	
	Universal	US74HC138	
M74HC139	Hitachi	HD74HC139	
	Motorola	**MC74HC139**	**1130**
	National	MM74HC139	
	Nitron	NC74HC139	
	RCA	**CD74HC139**	**1150**
	SPI	SP74HC139	
	Signetics	**74HC139**	**1157**
	SSS	SS74HC139	
	TI	SN74HC139	
	Toshiba	**TC40H139**	**1363**
	Universal	US74HC139	
M74HC14	**Motorola**	**MC74HC14**	**1125**
	National	MM74HC14	
	RCA	**CD74HC14**	**1149**
	SPI	SP74HC14	
	Signetics	**74HC14**	**1156**
	TI	SN74HC14	
	Universal	US74HC14	
M74HC147	Hitachi	HD74HC147	
	Motorola	**MC74HC147**	**1131**
	National	MM74HC147	
	RCA	**CD74HC147**	**1150**
	SPI	SP74HC147	
	Signetics	**74HC147**	**1157**
	TI	SN74HC147	
	Universal	US74HC147	
M74HC148	Hitachi	HD74HC148	
	Nitron	NC74HC148	
	SPI	SP74HC148	
	TI	SN74HC148	
	Toshiba	**TC74HC148**	**1363**
M74HC151	Hitachi	HD74HC151	
	Motorola	**MC74HC151**	**1129**
	National	MM74HC151	
	RCA	**CD74HC151**	**1150**
	SPI	SP74HC151	
	Signetics	**74HC151**	**1157**
	TI	SN74HC151	
	Universal	US74HC151	
M74HC153	Hitachi	HD74HC153	
	Motorola	**MC74HC153**	**1129**
	National	MM74HC153	
	RCA	**CD74HC153**	**1150**
	SPI	SP74HC153	
	Signetics	**74HC153**	**1157**
	TI	SN74HC153	
	Toshiba	**TC40H153**	**1363**
	Universal	US74HC153	
M74HC154	Hitachi	HD74HC154	
	Motorola	**MC74HC154**	**1130**
	National	MM74HC154	
	RCA	**CD74HC154**	**1150**
	Signetics	**74HC154**	**1157**
	TI	SN74HC154	
	Universal	US74HC154	
M74HC157	Hitachi	HD74HC157	
	Motorola	**MC74HC157**	**1129**
	National	MM74HC157	
	Nitron	NC74HC157	
	RCA	**CD74HC157**	**1150**
	SPI	SP74HC157	
	Signetics	**74HC157**	**1157**
	TI	SN74HC157	
	Toshiba	**TC40H157**	**1363**
	Universal	US74HC157	
M74HC158	Hitachi	HD74HC158	
	Motorola	**MC74HC158**	**1129**
	National	MM74HC158	
	RCA	**CD74HC158**	**1150**
	SPI	SP74HC158	
	Signetics	**74HC158**	**1157**
	TI	SN74HC158	
	Toshiba	**TC40H158**	**1363**
	Universal	US74HC158	
M74HC160	**Motorola**	**MC74HC160**	**1127**
	National	MM74HC160	
	RCA	**CD74HC160**	**1150**
	SPI	SP74HC160	
	Signetics	**74HC160**	**1157**
	TI	SN74HC160	
	Universal	US74HC160	
M74HC161	Hitachi	HD74HC161	
	Motorola	**MC74HC161**	**1127**
	National	MM74HC161	
	RCA	**CD74HC161**	**1150**
	SPI	SP74HC161	
	Signetics	**74HC161**	**1157**
	TI	SN74HC161	
	Universal	US74HC161	

◆ Discontinued

Bold face device numbers indicate manufacturers data is provided in the IC Master on the pages noted.

SGS Semiconductor (Cont'd)

Manufacturer Device	Replacement Source	Device	IC Master Page
M74HC162	Hitachi	HD74HC162	
	Motorola	**MC74HC162**	1127
	National	MM74HC162	
	RCA	**CD74HC162**	1150
	SPI	SP74HC162	
	Signetics	**74HC162**	1157
	TI	SN74HC162	
	Universal	US74HC162	
M74HC163	Hitachi	HD74HC163	
	Motorola	**MC74HC163**	1127
	National	MM74HC163	
	RCA	**CD74HC163**	1150
	SPI	SP74HC163	
	Signetics	**74HC163**	1157
	TI	SN74HC163	
	Universal	US74HC163	
M74HC164	Hitachi	HD74HC164	
	Motorola	**MC74HC164**	1128
	National	MM74HC164	
	RCA	**CD74HC164**	1149
	SPI	SP74HC164	
	Signetics	**74HC164**	1157
	TI	SN74HC164	
	Universal	US74HC164	
M74HC165	Hitachi	HD74HC165	
	Motorola	**MC74HC165**	1128
	National	MM74HC165	
	RCA	**CD74HC165**	1149
	SPI	SP74HC165	
	Signetics	**74HC165**	1157
	TI	SN74HC165	
	Universal	US74HC165	
M74HC166	Motorola	MC74HC166	
	Nitron	NC74HC166	
	RCA	**CD74HC166**	1149
	Signetics	**74HC166**	1157
	TI	SN74HC166	
	Universal	US74HC166	
M74HC173	Hitachi	HD74HC173	
	Motorola	**MC74HC173**	1126
	National	MM74HC173	
	RCA	**CD74HC173**	1149
	SPI	SP74HC173	
	Signetics	**74HC173**	1157
	TI	SN74HC173	
	Universal	US74HC173	
M74HC174	Hitachi	HD74HC174	
	Motorola	**MC74HC174**	1126
	National	MM74HC174	
	Nitron	NC74HC174	
	RCA	**CD74HC174**	1149
	SPI	SP74HC174	
	Signetics	74HC174	
	TI	SN74HC174	
	Toshiba	**TC40H174**	1363
	Universal	US74HC174	
M74HC175	Hitachi	HD74HC175	
	Motorola	**MC74HC175**	1126
	National	MM74HC175	
	Nitron	NC74HC175	
	RCA	**CD74HC175**	1149
	SPI	SP74HC175	
	Signetics	**74HC175**	1157
	TI	SN74HC175	
	Toshiba	**TC40H175**	1363
	Universal	US74HC175	
M74HC181	**Motorola**	**MC74HC181**	1132
M74HC182	Motorola	MC74HC182	
	SPI	SP74HC182	
M74HC190	Hitachi	HD74HC190	
	Motorola	MC74HC190	
	RCA	**CD74HC190**	1150
	Signetics	PC74HC190	
		PCF74HC190	
	TI	SN74HC190	
	Toshiba	**TC74HC190**	1363
	Universal	US74HC190	
M74HC191	Hitachi	HD74HC191	
	Nitron	NC74HC191	
	RCA	**CD74HC191**	1150
	Signetics	**74HC191**	1157
	TI	SN74HC191	
	Universal	US74HC191	
M74HC192	Hitachi	HD74HC192	
	Motorola	**MC74HC192**	1127
	National	MM74HC192	
	RCA	**CD74HC192**	1150
	SPI	SP74HC192	
	Signetics	**74HC192**	1157
	TI	SN74HC192	
M74HC192	**Toshiba**	**TC40H192**	1363
	Universal	US74HC192	
M74HC193	Hitachi	HD74HC193	
	Motorola	**MC74HC193**	1127
	National	MM74HC193	
	RCA	**CD74HC193**	1150
	SPI	SP74HC193	
	Signetics	**74HC193**	1157
	TI	SN74HC193	
	Toshiba	**TC40H193**	1363
	Universal	US74HC193	
M74HC194	Hitachi	HD74HC194	
	Motorola	**MC74HC194**	1128
	National	MM74HC194	
	RCA	**CD74HC194**	1149
	SPI	SP74HC194	
	Signetics	**74HC194**	1157
	TI	SN74HC194	
	Universal	US74HC194	
M74HC195	Hitachi	HD74HC195	
	Motorola	**MC74HC195**	1128
	National	MM74HC195	
	RCA	**CD74HC195**	1149
	SPI	SP74HC195	
	Signetics	**74HC195**	1157
	TI	SN74HC195	
	Universal	US74HC195	
M74HC20	Hitachi	HD74HC20	
	Motorola	**MC74HC20**	1122
	National	MM74HC20	
	RCA	**CD74HC20**	1149
	SPI	SP74HC20	
	Signetics	**74HC20**	1156
	TI	SN74HC20	
	Toshiba	**TC40H020**	1363
	Universal	US74HC20	
M74HC221	Motorola	MC74HC221	
	National	MM74HC221	
	RCA	**CD74HC221**	1150
	Signetics	74HC221	
	Universal	US74HC221	
M74HC237	Hitachi	HD74HC237	
	Motorola	MC74HC237	
	TI	SN74HC137	
		SN74HC237	
	Toshiba	**TC74HC237**	1363
	Universal	US74HC237	
M74HC238	**RCA**	**CD74HC238**	1150
	SPI	SP74HC238	
	Signetics	**74HC238**	1157
	SSS	SS74HC238	
	TI	SN74HC238	
M74HC240	Hitachi	HD74HC240	
	Mitel	MD74HC240	
	Motorola	**MC74HC240**	1124
	National	MM74HC240	
	Nitron	NC74HC240	
	RCA	**CD74HC240**	1149
	SPI	SP74HC240	
	Signetics	**74HC240**	1157
	SSS	SS74HC240	
	Supertex	SI74HC240	
	TI	SN74HC240	
	Toshiba	**TC40H240**	1363
	Universal	US74HC240	
	Zytrex	ZX74HC240	
M74HC241	Hitachi	HD74HC241	
	Mitel	MD74HC241	
	Motorola	**MC74HC241**	1124
	National	MM74HC241	
	Nitron	NC74HC241	
	RCA	**CD74HC241**	1149
	SPI	SP74HC241	
	Signetics	**74HC241**	1157
	SSS	SS74HC241	
	Supertex	SI74HC241	
	TI	SN74HC241	
	Universal	US74HC240	
	Zytrex	ZX74HC241	
M74HC242	Hitachi	HD74HC242	
	Motorola	**MC74HC242**	1124
	National	MM74HC242	
	Nitron	NC74HC242	
	RCA	**CD74HC242**	1149
		SGN	
	SPI	SP74HC242	
	Signetics	**74HC242**	1158
	TI	SN74HC242	
	Universal	US74HC242	
M74HC243	Hitachi	HD74HC243	
	Motorola	**MC74HC243**	1124
		MC74HC245	1124
M74HC243	National	MM74HC243	
	RCA	**CD74HC243**	1149
	SPI	SP74HC243	
	SGS	M74HC245	
	Signetics	**74HC243**	1158
	TI	SN74HC243	
	Universal	US74HC243	
M74HC244	Hitachi	HD74HC244	
	Mitel	MD74HC244	
	Motorola	**MC74HC244**	1124
	National	MM74HC244	
	Nitron	NC74HC244	
	RCA	**CD74HC244**	1149
	SPI	SP74HC244	
	Signetics	**74HC244**	1158
	SSS	SS74HC244	
	Supertex	SI74HC244	
	TI	SN74HC244	
	Universal	US74HC244	
	Zytrex	ZX74HC244	
M74HC245	Hitachi	HD74HC243	
	Motorola	**MC74HC243**	1124
		MC74HC245	1124
	National	MM74HC243	
	RCA	**CD74HC243**	1149
	SPI	SP74HC243	
	SGS	M74HC243	
	Signetics	**74HC243**	1158
	TI	SN74HC243	
	Universal	US74HC243	
M74HC251	Hitachi	HD74HC251	
	Motorola	**MC74HC251**	1129
	National	MM74HC251	
	RCA	**CD74HC251**	1150
	SPI	SP74HC251	
	Signetics	**74HC251**	1158
	TI	SN74HC251	
	Universal	US74HC251	
M74HC253	Hitachi	HD74HC253	
	Motorola	**MC74HC253**	1129
	National	MM74HC253	
	RCA	**CD74HC253**	1150
	SPI	SP74HC253	
	Signetics	**74HC253**	1158
	TI	SN74HC253	
	Universal	US74HC253	
M74HC257	Hitachi	HD74HC257	
	Motorola	**MC74HC257**	1129
	National	MM74HC257	
	Nitron	NC74HC257	
	RCA	**CD74HC257**	1150
	SPI	SP74HC257	
	Signetics	**74HC257**	1158
	TI	SN74HC257	
	Universal	US74HC257	
M74HC258	SPI	SP74HC258	
M74HC266	Hitachi	HD74HC266	
	Motorola	**MC74HC266**	1123
	National	MM74HC266	
	SPI	SP74HC266	
	Signetics	**74HC266**	1158
	TI	SN74HC266	
	Universal	US74HC266	
M74HC27	**Motorola**	**MC74HC27**	1122
	National	MM74HC27	
	RCA	**CD74HC27**	1149
	SPI	SP74HC27	
	Signetics	**74HC27**	1156
	TI	SN74HC27	
	Toshiba	**TC40H027**	1363
	Universal	US74HC27	
M74HC273	CTI	74HC273	
	Hitachi	HD74HC273	
	Motorola	**MC74HC273**	1126
	Nitron	NC74HC273	
	RCA	**CD74HC273**	1149
	SPI	SP74HC273	
	Signetics	**74HC273**	1158
	TI	SN74HC273	
	Universal	US74HC273	
M74HC280	Hitachi	HD74HC280	
	Motorola	**MC74HC280**	1132
	National	MM74HC280	
	RCA	**CD74HC280**	1150
	SPI	SP74HC280	
	Signetics	**74HC280**	1158
	TI	SN74HC280	
M74HC283	**Motorola**	**MC74HC283**	1132
	Universal	US74HC283	
M74HC292	Motorola	MC74HC292	
M74HC294	Motorola	MC74HC294	
M74HC298	Hitachi	HD74HC298	
	Motorola	MC74HC298	
	SPI	SP74HC298	
	TI	SN74HC298	
	Universal	US74HC298	
M74HC299	**Motorola**	**MC74HC299**	1129
	National	MM74HC299	
	RCA	**CD74HC299**	1149
	Signetics	**74HC299**	1158
	Universal	US74HC299	
M74HC30	Hitachi	HD74HC30	
	Motorola	**MC74HC30**	1122
	National	MM74HC30	
	RCA	**CD74HC30**	1149
	SPI	SP74HC30	
	Signetics	**74HC30**	1156
	TI	SN74HC30	
	Universal	US74HC30	
M74HC32	Hitachi	HD74HC27	
		HD74HC32	
	Motorola	**MC74HC32**	1122
	National	MM74HC32	
	RCA	**CD74HC32**	1149
	SPI	SP74HC32	
	Signetics	**74HC32**	1156
	TI	SN74HC32	
	Toshiba	**TC40H032**	1363
	Universal	US74HC32	
M74HC354	Hitachi	HD74HC354	
	Motorola	**MC74HC354**	1130
	National	MM74HC354	
	RCA	**CD74HC354**	1150
	Signetics	**74HC354**	1158
	TI	SN74HC354	
	Universal	US74HC354	
M74HC356	Hitachi	HD74HC356	
	Motorola	**MC74HC356**	1130
	National	MM74HC356	
	RCA	**CD74HC356**	1150
	Signetics	**74HC356**	1158
	TI	SN74HC356	
	Universal	US74HC356	
M74HC365	Hitachi	HD74HC365	
	Motorola	**MC74HC365**	1124
	National	MM74HC365	
	RCA	**CD74HC365**	1149
	SPI	SP74HC365	
	TI	SN74HC365	
	Universal	US74HC365	
M74HC366	Hitachi	HD74HC366	
	Motorola	**MC74HC366**	1124
	National	MM74HC366	
	RCA	**CD74HC366**	1149
	SPI	SP74HC366	
	Signetics	**74HC366**	1158
	TI	SN74HC366	
	Universal	US74HC366	
M74HC367	Hitachi	HD74HC367	
	Motorola	**MC74HC367**	1124
	National	MM74HC367	
	Nitron	NC74HC367	
	RCA	**CD74HC367**	1149
	SPI	SP74HC367	
	Signetics	**74HC367**	1158
	TI	SN74HC367	
	Universal	US74HC367	
M74HC368	Hitachi	HD74HC368	
	Motorola	**MC74HC368**	1124
	National	MM74HC368	
	RCA	**CD74HC368**	1149
	Signetics	**74HC368**	1158
	TI	SN74HC368	
	Universal	US74HC368	
M74HC373	Hitachi	HD74HC373	
	Mitel	MD74HC373	
	Motorola	**MC74HC373**	1126
	National	MM74HC373	
	Nitron	NC74HC373	
	RCA	**CD74HC373**	1150
	SPI	SP74HC373	
	Signetics	**74HC373**	1158
	SSS	SS74HC373	
	Supertex	SI74HC373	
	TI	SN74HC373	
	Universal	US74HC373	
	Zytrex	ZX74HC373	
M74HC374	Hitachi	HD74HC374	
	Mitel	MD74HC374	
	Motorola	**MC74HC374**	1126
	National	MM74HC374	
	Nitron	NC74HC374	
	RCA	**CD74HC374**	1149

(Continued)

◆ Discontinued

The manufacturers report their devices can be used as direct replacements.
Performance details often differ, so compare the specifications considering your requirements.

SGS Semiconductor (Cont'd)

Manufacturer Device	Replacement Source	Device	IC Master Page
M74HC374	SPI	SP74HC374	
	Signetics	**74HC374**	**1158**
	SSS	SS74HC374	
	TI	SN74HC374	
	Universal	US74HC374	
	Zytrex	ZX74HC374	
M74HC377	Hitachi	HD74HC377	
	Motorola	MC74HC377	
	RCA	**CD74HC377**	**1149**
	Signetics	**74HC377**	**1158**
	TI	SN74HC377	
	Universal	US74HC377	
M74HC390	Hitachi	HD74HC390	
	Motorola	**MC74HC390**	**1127**
	National	MM74HC390	
	RCA	**CD74HC390**	**1150**
	SPI	SP74HC390	
	Signetics	**74HC390**	**1158**
	TI	SN74HC390	
	Universal	US74HC390	
M74HC393	Hitachi	HD74HC393	
	Motorola	**MC74HC393**	**1127**
	National	MM74HC393	
	Nitron	NC74HC393	
	RCA	**CD74HC393**	**1150**
	SPI	SP74HC393	
	Signetics	**74HC393**	**1158**
	TI	SN74HC393	
	Universal	US74HC393	
M74HC4002	**Motorola**	**MC74HC4002**	**1123**
	National	MM74HC4002	
	RCA	**CD74HC4002**	**1149**
	SPI	SP74HC4002	
	Signetics	**74HC4002**	**1160**
	TI	SN74HC4002	
	Universal	US74HC4002	
M74HC4017	**Motorola**	**MC74HC4017**	**1128**
	National	MM74HC4017	
	RCA	**CD74HC4017**	**1150**
	SPI	SP74HC4017	
	Signetics	**74HC4017**	**1160**
	TI	SN74HC4017	
	Universal	US74HC4017	
M74HC4020	Hitachi	HD74HC4020	
	Motorola	**MC74HC4020**	**1128**
	National	MM74HC4020	
	RCA	**CD74HC4020**	**1150**
	SPI	SP74HC4020	
	Signetics	**74HC4020**	**1160**
	TI	SN74HC4020	
	Universal	US74HC4020	
M74HC4022	**Toshiba**	**TC74HC4022**	**1363**
M74HC4024	Hitachi	HD74HC4024	
	Motorola	MC74HC4024	
	RCA	**CD74HC4024**	**1150**
	Signetics	**74HC4024**	**1160**
	TI	SN74HC4024	
	Universal	US74HC4024	
M74HC4040	Hitachi	HD74HC4040	
	Motorola	**MC74HC4040**	**1128**
	National	MM74HC4040	
	RCA	**CD74HC4040**	**1150**
	SPI	SP74HC4040	
	Signetics	**74HC4040**	**1160**
	TI	SN74HC4040	
	Universal	US74HC4040	
M74HC4049	**Motorola**	**MC74HC4049**	**1124**
	National	MM74HC4049	
	RCA	**CD74HC4049**	**1149**
	Signetics	**74HC4049**	**1160**
	TI	SN74HC4049	
	Universal	US74HC4049	
M74HC4050	Motorola	MC84HC4050	
	RCA	**CD74HC4050**	**1149**
	Universal	US74HC4050	
M74HC4051	**Motorola**	**MC74HC4051**	**1130**
	RCA	**CD74HC4051**	**1150**
	Signetics	**74HC4051**	**1160**
	TI	SN74HC4051	
	Universal	US74HC4051	
M74HC4052	**Motorola**	**MC74HC4052**	**1130**
	RCA	**CD74HC4052**	**1150**
	Signetics	**74HC4052**	**1160**
	TI	SN74HC4052	
	Universal	US74HC4052	
M74HC4053	**Motorola**	**MC74HC4053**	**1130**
	RCA	**CD74HC4053**	**1150**
	Signetics	**74HC4053**	**1160**
	TI	SN74HC4053	
	Universal	US74HC4053	
M74HC4060	**Motorola**	**MC74HC4060**	**1128**
	National	MM74HC4060	
	RCA	**CD74HC4060**	**1150**
	Signetics	**74HC4060**	**1160**
	TI	SN74HC4060	
	Universal	US74HC4060	
M74HC4066	**Motorola**	**MC74HC4066**	**1130**
	RCA	CE74HC4066	
	Signetics	PC74HC4066	
	TI	SN74HC4075	
	Universal	US74HC4066	
M74HC4075	AMD	AM2167	
	Cypress	CY7C167	
	Inmos	IMS1400	
	Motorola	**MC74HC4075**	**1122**
	Panasonic	MN74HC4075	
	RCA	**CD74HC4075**	**1149**
	Signetics	PC74HC4075	
	Toshiba	**TC74HC4075**	**1363**
	Universal	US74HC4075	
M74HC4078	**Motorola**	**MC74HC4078**	**1123**
	National	MM74HC4078	
	SPI	SP74HC4078	
	TI	SN74HC4078A	
	Toshiba	**TC74HC4078**	**1363**
	Universal	US74HC4078	
M74HC4094	Cypress	CY7C186	
	IDT	**IDT7164**	**4055**
	RCA	**CD74HC4094**	**1149**
	Signetics	PC74HC4094	
M74HC42	Hitachi	HD74HC42	
	Motorola	**MC74HC42**	**1130**
	National	MM74HC42	
	Nitron	NC74HC42	
	RCA	**CD74HC42**	**1150**
	SPI	SP74HC42	
	Signetics	**74HC42**	**1156**
	TI	SN74HC42	
	Universal	US74HC42	
M74HC423	Motorola	MC74HC423	
	RCA	**CD74HC423**	**1150**
	Signetics	**74HC423**	**1158**
M74HC4511	**RCA**	**CD74HC4511**	**1150**
M74HC4514	Hitachi	HD74HC4514	
	Motorola	**MC74HC4514**	**1130**
	National	MM74HC4514	
	RCA	**CD74HC4514**	**1150**
	Signetics	**74HC4514**	**1161**
	TI	SN74HC4514	
	Universal	US74HC4514	
M74HC4515	Cypress	CY7C187	
	Fairchild	F1600	
	Hitachi	HM6287	
		HM6787	**4035**
	Inmos	IMS1600	
	IDT	IDT7187	
	Motorola	MCM6287	
	NEC	MPD4361	
	RCA	**CD74HC4515**	**1150**
	Signetics	PC74HC4515	
	Toshiba	TC5561	
		TC5562	
M74HC4518	Cypress	CY7C171	
	IDT	IDT71681	
	RCA	**CD74HC4518**	**1150**
	Signetics	PC74HC4518	
M74HC4520	**RCA**	**CD74HC4520**	**1150**
	Signetics	**74HC4520**	**1161**
M74HC4538	**Motorola**	**MC74HC4538**	**1131**
	National	MM74HC4538	
	RCA	**CD74HC4538**	**1150**
	Signetics	**74HC4538**	**1161**
	Universal	US74HC4538	
M74HC4543	Cypress	CY7C172	
	IDT	IDT71682	
	Motorola	**MC74HC4543**	**1130**
	National	MM74HC4543	
	RCA	**CD74HC4543**	**1150**
	Signetics	PC74HC4543	
	Toshiba	**TC74HC4543**	**1363**
	Universal	US74HC4543	
M74HC533	Hitachi	HD74HC533	
	Motorola	**MC74HC533**	**1126**
	National	MM74HC533	
	RCA	**CD74HC533**	**1150**
	SPI	SP74HC533	
	Signetics	**74HC533**	**1159**
	SSS	SS74HC533	
	TI	SN74HC533	
	Universal	US74HC533	
M74HC534	Hitachi	HD74HC534	
	Motorola	**MC74HC534**	**1127**
M74HC534	National	MM74HC534	
	RCA	**CD74HC534**	**1149**
	SPI	SP74HC534	
	Signetics	**74HC534**	**1159**
	SSS	SS74HC534	
	TI	SN74HC534	
	Universal	US74HC534	
M74HC540	Hitachi	HD74HC540	
	Motorola	**MC74HC540**	**1125**
	RCA	**CD74HC540**	**1149**
	Signetics	**74HC540**	**1159**
	SSS	SS74HC540	
	TI	SN74HC540	
	Toshiba	**TC74HC540**	**1363**
	Universal	US74HC540	
M74HC541	Hitachi	HD74HC541	
	Motorola	**MC74HC541**	**1125**
	RCA	**CD74HC541**	**1149**
	Signetics	**74HC541**	**1159**
	SSS	SS74HC541	
	TI	SN74HC541	
	Universal	US74HC541	
M74HC563	Hitachi	HD74HC563	
	Motorola	**MC74HC563**	**1126**
	National	MM74HC563	
	RCA	**CD74HC563**	**1150**
	SPI	SP74HC563	
	Signetics	**74HC563**	**1159**
	SSS	SS74HC563	
	TI	SN74HC563	
	Universal	US74HC563	
M74HC564	Hitachi	HD74HC564	
	Motorola	**MC74HC564**	**1127**
	National	MM74HC564	
	RCA	**CD74HC564**	**1149**
		MC74HC564	
	Signetics	**74HC564**	**1159**
	SSS	SS74HC564	
	TI	SN74HC564	
	Universal	US74HC564	
M74HC573	Hitachi	HD74HC573	
	Motorola	**MC74HC573**	**1126**
	National	MM74HC573	
	RCA	**CD74HC573**	**1150**
	SPI	SP74HC573	
	Signetics	**74HC573**	**1159**
	SSS	SS74HC573	
	TI	SN74HC573	
	Toshiba	**TC74HC573**	**1363**
	Universal	US74HC573	
M74HC574	Hitachi	HD74HC574	
	Motorola	**MC74HC574**	**1127**
	National	MM74HC574	
	RCA	**CD74HC574**	**1149**
	SPI	SP74HC574	
	Signetics	**74HC574**	**1159**
	SSS	SS74HC574	
	TI	SN74HC574	
	Universal	US74HC574	
M74HC595	Cypress	CY7C164	
	Hitachi	HD74HC595	
	Inmos	IMS1620	
	Motorola	MC74HC595	
	NEC	MPD4362	
	TI	SN74HC595	
	Universal	US74HC595	
M74HC643	Hitachi	HD74HC643	
	Motorola	**MC74HC643**	**1125**
	National	MM74HC643	
	RCA	**CD74HC643**	**1149**
	Signetics	**74HC643**	**1159**
	SSS	SS74HC643	
	TI	SN74HC643	
	Universal	US74HC643	
M74HC646	Hitachi	HD74HC646	
	Motorola	**MC74HC646**	**1125**
	National	MM74HC646	
	Nitron	NC74HC646	
	RCA	**CD74HC646**	**1149**
	Signetics	**74HC646**	**1159**
	TI	SN74HC646	
	Universal	US74HC646	
M74HC648	Hitachi	HD74HC648	
	Motorola	**MC74HC648**	**1125**
	National	MM74HC648	
	RCA	**CD74HC648**	**1149**
	Signetics	**74HC648**	**1159**
	TI	SN74HC648	
	Universal	US74HC648	
M74HC670	**RCA**	**CD74HC670**	**1149**
	Signetics	**74HC670**	**1159**
	TI	SN74HC670	
M74HC688	**Motorola**	**MC74HC688**	**1131**
	National	MM74HC688	
	RCA	**CD74HC688**	**1150**
	Signetics	74HC688	
	TI	SN74HC688	
	Toshiba	**TC74HC688**	**1363**
M74HC73	Hitachi	HD74HC73	
	Motorola	**MC74HC73**	**1126**
	National	MM74HC73	
	RCA	**CD74HC73**	**1149**
	SPI	SP74HC73	
	Signetics	**74HC73**	**1156**
	TI	SN74HC73	
	Toshiba	**TC74HC73**	**1363**
	Universal	US74HC73	
M74HC74	Hitachi	HD74HC74	
	Motorola	**MC74HC74**	**1126**
	National	MM74HC74	
	Nitron	NC74HC74	
	RCA	**CD74HC74**	**1149**
	SPI	SP74HC74	
	Signetics	**74HC74**	**1156**
	TI	SN74HC74	
	Toshiba	**TC40H074**	**1363**
	Universal	US74HC74	
M74HC75	Hitachi	HD74HC75	
	Motorola	**MC74HC75**	**1126**
	National	MM74HC75	
	RCA	**CD74HC75**	**1150**
	SPI	SP74HC75	
	Signetics	**74HC75**	**1156**
	TI	SN74HC75	
	Toshiba	**TC74HC75**	**1363**
	Universal	US74HC75	
M74HC76	Hitachi	HD74HC76	
	Motorola	**MC74HC76**	**1126**
	National	MM74HC76	
	SPI	SP74HC76	
	Signetics	74HC76	
	TI	SN74HC76	
	Toshiba	**TC40H076**	**1363**
	Universal	US74HC76	
M74HC85	**Motorola**	**MC74HC85**	**1131**
	National	MM74HC85	
	RCA	**CD74HC85**	**1150**
	SPI	SP74HC85	
	Signetics	**74HC85**	**1156**
	TI	SN74HC85	
	Universal	US74HC85	
M74HC86	Hitachi	HD74HC86	
	Motorola	**MC74HC86**	**1123**
	National	MM74HC86	
	RCA	**CD74HC86**	**1149**
	SPI	SP74HC86N	
	Signetics	**74HC86**	**1156**
	TI	SN74HC86	
	Universal	US74HC86	
M74HCT04	Motorola	MC74HCT04	
	RCA	**CD74HCT04**	**1149**
	Universal	US74HCT04	
M74HCT137	CTI	74HCT137	
	MicroTech	74HCT137	
		74HCTR137	
	Supertex	74HCT137	
	TI	SN74HCT137	
	Toshiba	**TC74HCT137**	**1363**
	Universal	US74HCT137	
M74HCT138	CTI	74HCT138	
	IDT	IDT74HCT138	
	Mitel	MD74HCT138	
	Motorola	MC74HCT138	
	Nitron	NC74HCT138	
	Plessey	MV74HCT138	
	RCA	**CD74HCT138**	**1150**
	SPI	SP74HCT138	
	Signetics	**74HCT138**	**1157**
	SSS	SS74HCT138	
	TI	SN74HCT138	
	Toshiba	**TC74HCT138**	**1363**
	Zytrex	ZX74HCT138-2	
M74HCT240	CTI	74HCT240	
	Hitachi	HD74HCT240	
	Micrel	MIC74HCT240	
	MicroTech	74HCTR240	
	Mitel	MD74HCT240	
	Motorola	MC74HCT240	
	National	MM74HCT240	
	Nitron	NC74HCT240	
	Plessey	MV74HCT240	
	RCA	**CD74HCT240**	**1149**
	SPI	SP74HCT240	
	Signetics	**74HCT240**	**1157**

(Continued)

◆ Discontinued

Bold face device numbers indicate manufacturers data is provided in the IC Master on the pages noted.

SGS Semiconductor (Cont'd)

Manufacturer Device	Replacement Source	Device	IC Master Page
M74HCT240	SSS	SS74HCT240	
	Supertex	SI74HCT240	
	TI	SN74HCT240	
	Toshiba	**TC74HCT240**	**1363**
	Universal	US74HCT240	
	Zytrex	ZX74HCT240-2	
M74HCT241	CTI	74HCT241	
	Hitachi	HD74HCT241	
	Micrel	MIC74HCT241	
	MicroTech	74HCTR241	
	Mitel	MD74HCT241	
	Motorola	MC74HCT241	
	National	MM74HCT241	
	Nitron	NC74HCT241	
	Plessey	MV74HCT241	
	RCA	**CD74HCT241**	**1149**
	SPI	SP74HCT241	
	Signetics	**74HCT241**	**1157**
	SSS	SS74HCT241	
	Supertex	SI74HCT241	
	TI	SN74HCT241	
	Toshiba	**TC74HCT241**	**1363**
	Universal	US74HCT241	
	Zytrex	ZX74HCT241-2	
M74HCT244	CTI	74HCT244	
	Hitachi	HD74HCT244	
	Micrel	MIC74HCT244	
	MicroTech	74HCTR244	
	Mitel	MD74HCT244	
	Motorola	MC74HCT244	
	National	MM74HCT244	
	Nitron	NC74HCT244	
	Plessey	MV74HCT244	
	RCA	**CD74HCT244**	**1149**
	SPI	SP74HCT244	
	Signetics	**74HCT244**	**1158**
	SSS	SS74HCT244	
	Supertex	SI74HCT244	
	TI	SN74HCT244	
	Toshiba	**TC74HCT244**	**1363**
	Universal	US74HCT244	
	Zytrex	ZX74HCT244-2	
M74HCT245	CTI	74HCT245	
	GTEMicro	G74SC245	
	Hitachi	HD74HCT245	
	Micrel	MIC74HCT245	
	MicroTech	74HCTR245	
	Mitel	MD74HCT245	
	Motorola	MC74HCT245	
	National	MM74HCT245	
	Plessey	MV74HCT245	
		MV74SC245	
	RCA	**CD74HCT245**	**1149**
	SPI	SP74HCT245	
	Signetics	**74HCT245**	**1158**
	SSS	SS74HCT245	
	TI	SN74HCT245	
	Toshiba	**TC74HCT245**	**1363**
	Universal	US74HCT245	
M74HCT373	CTI	74HCT373	
	GTEMicro	G74SC373	
	Hitachi	HD74HCT373	
	Micrel	MIC74HCT373	
	MicroTech	74HCTR373	
	Mitel	MD74HCT373	
	Motorola	MC74HCT373	
	National	MM74HCT373	
	Nitron	NC74HCT373	
	Plessey	MV74HCT373	
		MV74SC373	
	RCA	**CD74HCT373**	**1150**
	SPI	SP74HCT373	
	Signetics	**74HCT373**	**1158**
	SSS	SS74HCT373	
	Supertex	SI74HCT373	
	TI	SN74HCT373	
	Toshiba	**TC74HCT373**	**1363**
	Universal	US74HCT373	
	Zytrex	ZX74HCT373-2	
M74HCT374	CTI	74HCT374	
	GTEMicro	G74SC374	
	Hitachi	HD74HCT374	
	Micrel	MIC74HCT374	
	MicroTech	74HCTR374	
	Mitel	MD74HCT374	
	Motorola	MC74HCT374	
	National	MM74HCT374	
	Nitron	NC74HCT374	
	Plessey	MV74HCT374	
		MV74SC374	
			(Continued)
M74HCT374	RCA	CD74HCT374	
	SPI	SP74HCT374	
	Signetics	**74HCT374**	**1158**
	SSS	SS74HCT374	
	Supertex	SI74HCT374	
	TI	SN74HCT374	
	Toshiba	**TC74HCT374**	**1363**
	Universal	US74HCT374	
	Zytrex	ZX74HCT374-2	
M74HCT540	CTI	74HCT540	
	Hitachi	HD74HCT540	
	Micrel	MIC74HCT540	
	MicroTech	74HCTR540	
	Mitel	MD74HCT540	
	Motorola	MC74HCT540	
	Plessey	MV74HCT540	
	RCA	**CD74HCT540**	**1149**
	SPI	SP74HCT540	
	Signetics	**74HCT540**	**1159**
	SSS	SS74HCT540	
	TI	SN74HCT540	
	Toshiba	**TC74HCT540**	**1363**
	Universal	US74HCT540	
	Zytrex	ZX74HCT540-2	
M74HCT541	CTI	74HCT541	
	Hitachi	HD74HCT541	
	Micrel	MIC74HCT541	
	MicroTech	74HCTR541	
	Mitel	MD74HCT541	
	Motorola	MC74HCT541	
	Plessey	MV74HCT541	
	RCA	**CD74HCT541**	**1149**
	SPI	SP74HCT541	
	Signetics	**74HCT541**	**1159**
	SSS	SS74HCT541	
	TI	SN74HCT541	
	Toshiba	**TC74HCT541**	**1363**
	Universal	US74HCT541	
	Zytrex	ZX74HCT541-2	
M74HCT563	CTI	74HCT563	
	Hitachi	HD74HCT563	
	Micrel	MIC74HCT563	
	MicroTech	74HCTR563	
	Motorola	MC74HCT563	
	Plessey	MV74HCT563	
	RCA	**CD74HCT563**	**1150**
	Signetics	**74HCT563**	**1159**
	SSS	SS74HCT563	
	TI	SN74HCT563	
	Toshiba	**TC74HCT563**	**1363**
	Universal	US74HCT563	
M74HCT564	CTI	74HCT564	
	Hitachi	HD74HCT564	
	Micrel	MIC74HCT564	
	MicroTech	74HCTR564	
	Motorola	MC74HCT564	
	Plessey	MV74HCT564	
		MV74HCT573	
	RCA	CD74HCT564	
	Signetics	**74HCT564**	**1159**
	SSS	SS74HCT564	
	TI	SN74HCT564	
	Toshiba	**TC74HCT564**	**1363**
	Universal	US74HCT564	
M74HCT573	CTI	74HCT573	
	Hitachi	HD74HCT573	
	Micrel	MIC74HCT573	
	MicroTech	74HCTR573	
	Mitel	MD74HCT573	
	Motorola	MC74HCT573	
	RCA	**CD74HCT573**	**1150**
	SPI	SP74HCT573	
	Signetics	**74HCT573**	**1159**
	SSS	SS74HCT573	
	TI	SN74HCT573	
	Toshiba	TC74HCT573	
	Universal	US74HCT573	
M74HCT574	CTI	74HCT574	
	Hitachi	HD74HCT574	
	MicroTech	74HCTR574	
	Mitel	MD74HCT574	
	Motorola	MC74HCT574	
	Plessey	MV74HCT574	
	RCA	CD74HCT574	
	SPI	SP74HCT574	
	Signetics	**74HCT574**	**1159**
	SSS	SS74HCT574	
	TI	SN74HCT574	
	Toshiba	**TC74HCT574**	**1363**
	Universal	US74HCT574	
		US75HCT574	
M74HCT640	Hitachi	HD74HCT640	
	MicroTech	74HCTR640	
	Motorola	MC74HCT640	
	Nitron	NC74HCT640	
	RCA	**CD74HCT640**	**1149**
	Signetics	**74HCT640**	**1159**
	SSS	SS74HCT640	
	TI	SN74HCT640	
	Toshiba	**TC74HCT640**	**1363**
	Universal	US74HCT640	
	Zytrex	ZX74HCT640-2	
M74HCT643	Hitachi	HD74HCT643	
	MicroTech	74HCTR643	
	Motorola	MC74HCT643	
	RCA	**CD74HCT643**	**1149**
	Signetics	**74HCT643**	**1159**
	TI	SN74HCT643	
	Toshiba	**TC74HCT643**	**1363**
	Universal	US74HCT643	
	Zytrex	ZX74HCT643-2	
M74HCT646	Hitachi	HD74HCT646	
	Nitron	NC74HCT646	
	RCA	**CD74HCT646**	**1149**
	Signetics	**74HCT646**	**1159**
	TI	SN74HCT646	
	Toshiba	**TC74HCT646**	**1363**
	Universal	US74HCT646	
M74HCT648	Hitachi	HD74HCT648	
	RCA	**CD74HCT648**	**1149**
	Signetics	**74HCT648**	**1159**
	TI	SN74HCT648	
	Toshiba	**TC74HCT648**	**1363**
	Universal	US74HCT648	
M74HCU04	Motorola	MC74HCU04	
	RCA	CD74HCU04	
	Signetics	74HCU04	
M9306	GI	ER59256	
	NCR	59306	
M9346	GI	ER5911	
	Hyundai	HY93C46	
	National	COP495	
		NMC9346	
	NCR	59346	
		NCR59308	**4128**
	Sierra	SC22011	
MC1458	Fairchild	UA1458HC	
	Harris	CM1458	
		HA5102	
	MicroPwr	MPOP14	
	Motorola	**MC1458**	**3617**
	National	LF412	
	NEC	MPC251	
	PMI	OP14	
	RCA	**CA1458**	**3672**
	Signetics	**SA1458**	**3729**
	ThomsonCSF	μA1458	
	Samsung	**MC1458**	**3679**
		MC4558	**3679**
MC1488	**Motorola**	**MC1488**	**3211,3212**
MC1489	**Exar**	**XR1489A**	**3561**
	Fairchild	UA150	
		UA212A	
		μA1489A	
	Motorola	**MC1489A**	**3211,3212**
	National	DS1489A	
	Signetics	**MC1489A**	**3720,3726**
	SiliconG	SG1489A	
	TI	MC1489A	
		SN75189A	
MC1776	Harris	HA-2720	
	Intersil	ICL7611	
		ICL8021	
		LM4250	
	Maxim	ICL7611	
	Motorola	**MC1776**	**3616**
	National	LF441	
		LM4250	
	PMI	OP20	
		OP21	
		OP22	
	Solitron	UC4250	
	TI	TLC251	
		TLC271	
	ThomsonCSF	μA776	
MC3302	Cypress	CY7C901	
	Fairchild	μA2901	
		μA3302	
	Motorola	**LM2901**	**3631**
		MC3302	**3631**
	National	LM2901	
			(Continued)
MC3302	National	LM3302	
	NEC	μPC2901	
	PMI	CMP-04	
	Raytheon	LM2901	
		RC3302	
	RCA	CA3302	
	SGS	LM2901	
	Signetics	**LM2901**	**3721,3722**
		MC3302	**3721**
	SiliconG	SG324A	
	TI	LM2901	
		LM3302	
	ThomsonCSF	LM2901	
MC3303	Fairchild	UA338	
		μA3303	
	Motorola	**MC3303**	**3618**
	Signetics	**MC3303**	**3729**
	TI	MC3303	
MC3403	**Motorola**	**MC3403**	**3618**
MI45028	**Motorola**	**MC145028**	**3632**
NE555	Exar	XR555	
	Fairchild	μA555	
	Hitachi	HA17555	
	Intersil	NE555	
	Mitsubishi	M51841	
		M51848	
		M5251	
		M5E555	
	Motorola	MC1455	
	NEC	μPC1555	
	Raytheon	RC555	
	RCA	CA555	
	Sanyo	LB8555	
	Signetics	**NE555**	**3721**
		NE555N	
	TI	NE555	
	ThomsonCSF	LM555	
	Samsung	**NE555**	**3679**
NE556	Mitsubishi	M5E556	
	Signetics	**NE556**	**3721**
	ThomsonCSF	LM556	
	Samsung	**NE556**	**3679**
SG1524	Cherry	CS1524	
	Exar	**XR1524**	**3558**
	IPS	**IP1524**	**3599**
	LinearTech	LT1524	
	National	LM1524	
	RCA	CA1524	
	SGS	UC1524A	
	SiliconG	SG1524	
	Sprague	ULS-8124	
	TI	**SG1524**	**720**
	Unitrode	**UC1524A**	**3739,3739**
SG1524A	Cherry	CS1525A	
	Exar	**XR1525A**	**3559**
	IPS	**IP1525A**	**3599**
	LinearTech	LT1525A	
	Motorola	**SG1525A**	**3626**
	SiliconG	SG1525A	
	Siliconix	PWM125	
	Sprague	ULS-8125	
	TI	SG1525A	
	Unitrode	**UC1525A**	**3739**
SG1527	SiliconG	SG1527	
	Sprague	ULS-8127	
	Unitrode	**UC1527A**	**3739**
SG1527A	Cherry	CS1527A	
	IPS	IP1527A	
	LinearTech	LT1527A	
	Motorola	**SG1527A**	**3626**
	SiliconG	SG1527A	
	Siliconix	PWM27	
	Sprague	ULS-8125	
	TI	SG1527A	
	Unitrode	**UC1527A**	**3739**
SG2524	Cherry	CS2524	
	Exar	XR2524	
	IPS	**IP2524**	**3599**
	RCA	CA2524	
	SGS	UC2524A	
	SiliconG	SG2524	
	Sprague	ULQ-8124	
	TI	SG2524	
	Unitrode	**UC2524A**	**3739,3739**
SG2525A	National	MM5481	
	SGS	M5481	
	SiliconG	SG2525A	
SG2527A	SiliconG	SG2507A	
SG3524	Cherry	CS3524	
	Exar	**XR3524**	**3558**
			(Continued)

◆ Discontinued

The manufacturers report their devices can be used as direct replacements.
Performance details often differ, so compare the specifications considering your requirements.

SGS Semiconductor (Cont'd)

Manufacturer Device	Replacement Source	Device	IC Master Page
SG3524	**IPS**	**IP3524**	**3599**
		IP3524B	**3599**
	National	LM3524	
	RCA	CA3524	
	SGS	UC3524A	
	Signetics	**SG3524**	**3715,3720,3730**
	SiliconG	SG3524B	
	Sprague	ULN-8124	
	TI	SG3524	
	Unitrode	**UC3524A**	**3739,3739**
SG3525A	Exar	XR3525A	
	IPS	**IP3525A**	**3599**
	LinearTech	LT3525A	
	Motorola	**SG3525A**	**3626**
	SiliconG	SG3525A	
	Siliconix	PWM25	
	TI	SG3525A	
	Unitrode	**UC3525A**	**3739**
SG3527A	Cherry	CS3527	
		CS3527A	
	Exar	**XR3527A**	**3559**
	IPS	**IP3527**	**3599**
	LinearTech	LT3527A	
	Motorola	**SG3527A**	**3626**
	SiliconG	SG3527A	
	TI	SG3527A	
T54LS00	**Fairchild**	**54LS00**	**607,612,621,623**
	Motorola	**SN54LS00**	**1122**
	National	DM54LS00	
	Signetics	54LS00	
	TI	**SN54LS00**	**715**
T54LS02	**Fairchild**	**54LS02**	**607,612,621,623**
	Motorola	**SN54LS02**	**1122**
	National	DM54LS02	
	Signetics	54LS02	
	TI	**SN54LS02**	**715**
T54LS03	**Fairchild**	**54LS03**	**607,612,621,623**
	Motorola	**SN54LS03**	**1122**
	National	DM54LS03	
	TI	**SN54LS03**	**715**
T54LS04	**Fairchild**	**54LS04**	**607,612,621,623**
	Motorola	**SN54LS04**	**1124**
	National	DM54LS04	
	Signetics	54LS04	
	TI	**SN54LS04**	**715**
T54LS05	**Fairchild**	**54LS05**	**607,612,621,623**
	Motorola	**SN54LS05**	**1124**
	National	DM54LS05	
	TI	**SN54LS05**	**715**
T54LS08	**Fairchild**	**54LS08**	**607,612,621,623**
	Motorola	**SN54LS08**	**1122**
	National	DM54LS08	
	Signetics	54LS08	
	TI	**SN54LS08**	**715**
T54LS09	**Fairchild**	**54LS09**	**612**
	Motorola	**SN54LS09**	**1122**
	National	DM54LS09	
	TI	**SN54LS09**	**715**
T54LS10	**Fairchild**	**54LS10**	**607,612,621,623**
	Motorola	**SN54LS10**	**1122**
	National	DM54LS10	
	Signetics	54LS10	
	TI	**SN54LS10**	**715**
T54LS109	**Fairchild**	**54LS109**	**608,612,621,623**
T54LS11	**Fairchild**	**54LS11**	**607,612,621,623**
	Motorola	**SN54LS11**	**1122**
	National	DM54LS11	
	TI	**SN54LS11**	**715**
T54LS112	**Fairchild**	**54LS112**	**608,612,621,623**
T54LS113	**Fairchild**	**54LS113**	**608,612,621,623**
T54LS114	**Fairchild**	**54LS114**	**608,612,621,623**
T54LS125	**Fairchild**	**54LS125A**	**612**
	Motorola	SN54LS125	
		SN54LS125A	**1124**
	National	DM54LS125	
	Signetics	54LS125A	
	TI	**SN54LS125A**	**715**
T54LS126	**Fairchild**	**54LS126**	**612**
T54LS13	**Fairchild**	**54LS13**	**612**
	Motorola	**SN54LS13**	**1125**
	National	DM54LS13	
	TI	**SN54LS13**	**715**
T54LS132	**Motorola**	**SN54LS132**	**1125**
	National	DM54LS132	
	Signetics	54LS132	
	TI	**SN54LS132**	**715**
T54LS133	**Fairchild**	**54LS133**	**612**
	Motorola	**SN54LS133**	**1122**
T54LS136	**Fairchild**	**54LS136**	**612**
	Motorola	**SN54LS136**	**1123**
	National	DM54LS136	
	Signetics	54LS136	
	TI	**SN54LS136**	**715**
T54LS138	**Fairchild**	**54LS138**	**608,612,621,623**
	Motorola	**SN54LS138**	**1130**
	National	DM54LS138	
	Signetics	54LS138	
	TI	**SN54LS138**	**715**
T54LS139	**Fairchild**	**54LS139**	**608,613,621,623**
	Motorola	**SN54LS139**	**1130**
	National	DM54LS139	
	Signetics	54LS139	
	TI	**SN54LS139A**	**715**
T54LS14	**Fairchild**	**54LS14**	**612**
	Motorola	**SN54LS14**	**1125**
	National	DM54LS14	
	Signetics	54LS14	
	TI	**SN54LS14**	**715**
T54LS15	**Fairchild**	**54LS15**	**612**
	Motorola	**SN54LS15**	**1122**
	National	DM54LS15	
	TI	**SN54LS15**	**715**
T54LS151	**Fairchild**	**54LS151**	**608,613,621,623**
	Motorola	**SN54LS151**	**1129**
	National	DM54LS151	
	Signetics	54LS151	
	TI	**SN54LS151**	**715**
T54LS152	Cypress	CY7C166	
	Fairchild	**54LS152**	**613**
	NEC	MPD4363	
T54LS153	**Fairchild**	**54LS153**	**608,613,621,623**
	Motorola	**SN54LS153**	**1129**
	National	DM54LS153	
	Signetics	54LS153	
	TI	**SN54LS153**	**715**
T54LS155	**Fairchild**	**54LS155**	**613**
	Motorola	**SN54LS155**	**1130**
	National	DM54LS155	
	TI	**SN54LS155A**	**715**
T54LS156	**Fairchild**	**54LS156**	**613**
	Motorola	**SN54LS156**	**1130**
	National	DM54LS156	
	TI	**SN54LS156**	**715**
T54LS157	**Fairchild**	**54LS157**	**608,613,621,623**
	Motorola	**SN54LS157**	**1129**
	National	DM54LS157	
	Signetics	54LS157	
	TI	**SN54LS157**	**715**
T54LS158	**Fairchild**	**54LS158**	**608,613,621,623**
	Motorola	**SN54LS158**	**1129**
	National	DM54LS158	
	Signetics	54LS158	
	TI	**SN54LS158**	**715**
T54LS160	**Fairchild**	**54LS160A**	**613**
	Motorola	**SN54LS160A**	**1127**
	Signetics	54LS160A	
	TI	**SN54LS160A**	**715**
T54LS161	Fairchild	54LS161A	
	Motorola	**SN54LS161A**	**1127**
	National	DM54LS161A	
	Signetics	54LS161A	
	TI	**SN54LS161A**	**715**
T54LS162	**Fairchild**	**54LS162A**	**613**
	Motorola	**SN54LS162A**	**1127**
	National	DM54LS162A	
	Signetics	54LS162A	
	TI	**SN54LS162A**	**715**
T54LS163	**Fairchild**	**54LS163A**	**613**
	Motorola	**SN54LS163A**	**1127**
	National	DM54LS163	
		DM54LS163A	
	Signetics	54LS163A	
	TI	**SN54LS163A**	**715**
T54LS164	**Fairchild**	**54LS164**	**613**
	Motorola	**SN54LS164**	**1128**
	National	DM54LS164	
	Signetics	54LS164	
	TI	**SN54LS164**	**715**
T54LS168	**Fairchild**	**54LS168**	**613**
	Motorola	**SN54LS168**	**1127**
	National	DM54LS168	
T54LS169	**Fairchild**	**54LS169**	**613**
	Motorola	**SN54LS169**	**1127**
	National	DM54LS169	
	TI	SN54LS169B	
T54LS170	**Fairchild**	**54LS170**	**613**
	National	DM54LS170	
	TI	SN54LS170	
T54LS174	**Fairchild**	**54LS174**	**608,613,621,623**
	Motorola	**SN54LS174**	**1126**
	National	DM54LS174	
	Signetics	54LS174	
	TI	SN54LS174	
T54LS175	**Fairchild**	**54LS175**	**608,613,621,623**
	Motorola	**SN54LS175**	**1126**
	National	DM54LS175	
	Signetics	54LS175	
	TI	SN54LS175	
T54LS181	**Fairchild**	**54LS181**	**613**
	Motorola	**SN54LS181**	**1132**
	Signetics	54LS181	
	TI	SN54LS181	
T54LS190	**Motorola**	**SN54LS190**	**1127**
	National	DM54LS190	
	Signetics	54LS190	
	TI	SN54LS190	
T54LS191	**Motorola**	**SN54LS191**	**1127**
	National	DM54LS191	
	Signetics	54LS191	
	TI	SN54LS191	
T54LS192	**Fairchild**	**54LS192**	**613**
	Motorola	**SN54LS192**	**1127**
	National	DM54LS192	
	Raytheon	54LS192	
	Signetics	54LS192	
	TI	SN54LS192	
T54LS193	**Fairchild**	**54LS193**	**608,613,621,623**
	Motorola	**SN54LS193**	**1127**
	National	DM54LS193	
	Signetics	54LS193	
	TI	SN54LS193	
T54LS194	**Fairchild**	**54LS194A**	**608,613,621,623**
	Motorola	**SN54LS194A**	**1128**
	TI	SN54LS194A	
T54LS195	**Fairchild**	**54LS195A**	**613**
	Motorola	**SN54LS195A**	**1128**
	Signetics	54LS195A	
	TI	SN54LS195A	
T54LS196	**Motorola**	**SN54LS196**	**1127**
	National	DM54LS196	
	TI	SN54LS196	
T54LS197	**Motorola**	**SN54LS197**	**1127**
	National	DM54LS197	
	Signetics	54LS197	
	TI	SN54LS197	
T54LS20	**Fairchild**	**54LS20**	**608,612,621,623**
	Motorola	**SN54LS20**	**1122**
	National	DM54LS20	
	Signetics	54LS20	
	TI	**SN54LS20**	**715**
T54LS21	**Fairchild**	**54LS21**	**608,612,621,623**
	Motorola	**SN54LS21**	**1122**
	National	DM54LS21	
	TI	**SN54LS21**	**715**
T54LS22	**Fairchild**	**54LS22**	**608,612,621,623**
	Motorola	**SN54LS22**	**1122**
	National	DM54LS22	
	TI	**SN54LS22**	**715**
T54LS240	**Fairchild**	**54LS240**	**608,613,621,623**
	MMI	SN54LS240	
	Motorola	**SN54LS240**	**1124**
	TI	SN54LS240	
T54LS241	**Fairchild**	**54LS241**	**613**
	MMI	SN54LS241	
	Motorola	**SN54LS241**	**1124**
	TI	SN54LS241	
T54LS244	**Fairchild**	**54LS244**	**613**
	MMI	SN54LS244	
			(Continued)
T54LS244	**Motorola**	**SN54LS244**	**1124**
	TI	SN54LS244	
T54LS251	**Fairchild**	**54LS251**	**613**
	Motorola	**SN54LS251**	**1129**
	Signetics	54LS251	
	TI	SN54LS251	
T54LS253	**Fairchild**	**54LS253**	**608,613,621,623**
	Motorola	**SN54LS253**	**1129**
	National	DM54LS253	
		DM7214	
	Signetics	54LS253	
	TI	SN54LS253	
T54LS256	**Fairchild**	**54LS256**	**613**
	Motorola	**SN54LS256**	**1126**
T54LS257	**Fairchild**	**54LS257A**	**608,614,621,623**
	National	DM54LS257	
T54LS259	**Fairchild**	**54LS259**	**614**
	Motorola	**SN54LS259**	**1126**
	TI	SN54LS259B	
T54LS26	**Fairchild**	**54LS26**	**612**
	Motorola	**SN54LS26**	**1122**
	National	DM54LS26	
	TI	**SN54LS26**	**715**
T54LS260	**Fairchild**	**54LS260**	**614**
	Motorola	SN54LS260A	
	Signetics	54LS260A	
T54LS266	**Fairchild**	**54LS266**	**608,614,622,623**
	Motorola	**SN54LS266**	**1123**
	National	DM54LS266	
	Signetics	54LS266	
	TI	**SN54LS266**	**715**
T54LS27	**Fairchild**	**54LS27**	**608,612,621,623**
	Motorola	**SN54LS27**	**1122**
	National	DM54LS27	
	TI	**SN54LS27**	**715**
T54LS273	**Fairchild**	**54LS273**	**614**
	MMI	SN54LS273	
	Motorola	**SN54LS273**	**1126**
	Signetics	54LS273	
	TI	**SN54LS273**	**715**
T54LS279	**Fairchild**	**54LS279**	**608,614,622,623**
	Motorola	**SN54LS279**	**1126**
	National	DM54LS279	
	Signetics	54LS279	
	TI	SN54LS279	
T54LS28	**Fairchild**	**54LS28**	**612**
	Motorola	**SN54LS28**	**1122**
	Signetics	54LS194A	
		54LS28	
	TI	**SN54LS28**	**715**
T54LS280	**Motorola**	**SN54LS280**	**1132**
	TI	**SN54LS280**	**715**
T54LS283	**Fairchild**	**54LS283**	**608,614,622,623**
	Motorola	**SN54LS283**	**1132**
	National	DM54LS283	
	Signetics	54LS283	
	TI	**SN54LS283**	**715**
T54LS290	**Motorola**	**SN54LS290**	**1127**
	National	DM54LS290	
	Signetics	54LS290	
	TI	**SN54LS290**	**715**
T54LS293	**Motorola**	**SN54LS293**	**1127**
	National	DM54LS293	
	Signetics	54LS293	
	TI	**SN54LS293**	**715**
T54LS295	**Fairchild**	**54LS295A**	**614**
	Motorola	**SN54LS295A**	**1129**
	TI	SN54LS295B	
T54LS298	**Fairchild**	**54LS298**	**614**
T54LS30	**Fairchild**	**54LS30**	**608,612,621,623**
	Motorola	**SN54LS30**	**1122**
	National	DM54LS30	
	Signetics	54LS30	
	TI	**SN54LS30**	**715**
T54LS32	**Fairchild**	**54LS32**	**608,612,621,623**
	Motorola	**SN54LS32**	**1122**
	National	DM54LS32	
	Signetics	54LS32	
	TI	**SN54LS32**	**715**
T54LS33	**Fairchild**	**54LS33**	**612**
	Motorola	**SN54LS33**	**1122**
	TI	**SN54LS33**	**715**
T54LS352	**Fairchild**	**54LS352**	**614**
	Motorola	**SN54LS352**	**1129**
			(Continued)

◆ Discontinued

Bold face device numbers indicate manufacturers data is provided in the IC Master on the pages noted.

SGS Semiconductor (Cont'd)

Manufacturer Device	Replacement Source	Device	IC Master Page
T54LS352	National	DM54LS352	
	TI	**SN54LS352**	**715**
T54LS353	**Fairchild**	**54LS353**	**614**
	Motorola	**SN54LS353**	**1129**
	National	DM54LS353	
	SGS	T54LS354	
	TI	**SN54LS353**	**715**
T54LS354	**Fairchild**	**54LS353**	**614**
	Motorola	**SN54LS353**	**1129**
	National	DM54LS353	
	SGS	T54LS353	
	TI	**SN54LS353**	**715**
T54LS365	Fairchild	54LS365A	
	Motorola	**SN54LS365A**	**1124**
	Signetics	54LS365	
		54LS365A	
	TI	SN54LS365A	
T54LS366	Fairchild	54LS366A	
	Motorola	SN54LS366A	
	National	DM54LS366	
	Signetics	54LS366A	
	TI	SN54LS366A	
T54LS367	Fairchild	54LS367A	
	Motorola	**SN54LS367A**	**1124**
	National	DM54LS367	
	Signetics	54LS367	
		54LS367A	
	TI	SN54LS367A	
T54LS368	Fairchild	54LS368A	
	Motorola	**SN54LS368A**	**1124**
	National	DM54LS368	
	Signetics	54LS368	
		54LS368A	
	TI	SN54LS368A	
T54LS37	**Fairchild**	**54LS37**	**612**
	Motorola	**SN54LS37**	**1122**
	National	DM54LS37	
	Signetics	54LS37	
	TI	**SN54LS37**	**715**
T54LS373	MMI	SN54LS373	
	Motorola	**SN54LS373**	**1126**
	Signetics	54LS373	
	TI	**SN54LS373**	**715**
T54LS374	**Fairchild**	**54LS374**	**614**
	MMI	SN54LS374	
	Motorola	**SN54LS374**	**1126**
	National	DM54LS374	
	TI	**SN54LS374**	**715**
T54LS377	**Fairchild**	**54LS377**	**614**
	MMI	SN54LS377	
	Motorola	**SN54LS377**	**1126**
	Signetics	54LS377	
	TI	**SN54LS377**	**715**
T54LS378	**Fairchild**	**54LS378**	**614**
T54LS379	**Fairchild**	**54LS379**	**614**
T54LS38	**Fairchild**	**54LS38**	**612**
	Motorola	**SN54LS38**	**1122**
	National	DM54LS38	
	TI	**SN54LS38**	**715**
T54LS390	**Motorola**	**SN54LS390**	**1127**
	TI	**SN54LS390**	**716**
T54LS393	**Motorola**	**SN54LS393**	**1127**
	TI	**SN54LS393**	**716**
T54LS395	**Fairchild**	**54LS395**	**614**
	Signetics	54LS395	
T54LS40	**Fairchild**	**54LS40**	**612**
	Motorola	**SN54LS40**	**1122**
	National	DM54LS40	
	TI	**SN54LS40**	**715**
T54LS42	**Fairchild**	**54LS42**	
			608,612,621,623
	Motorola	**SN54LS42**	**1130**
	National	DM54LS42	
	Signetics	54LS42	
	TI	**SN54LS42**	**715**
T54LS490	**Fairchild**	**54LS490**	**614**
	Motorola	**SN54LS490**	**1127**
	TI	**SN54LS490**	**716**
T54LS51	**Fairchild**	**54LS51**	
			608,612,621,623
	Motorola	**SN54LS51**	**1123**
	National	DM54LS51	
	Signetics	54LS51	
	TI	**SN54LS51**	**715**
T54LS54	**Fairchild**	**54LS54**	
			608,612,621,623
	Motorola	**SN54LS54**	**1123**
	National	DM54LS54	
	TI	**SN54LS54**	**715**
T54LS55	**Fairchild**	**54LS55**	**612**
	Motorola	**SN54LS55**	**1123**
	National	DM54LS55	
T54LS670	**Fairchild**	**54LS670**	**614**
	Motorola	**SN54LS670**	**1128**
	National	DM54LS670	
	Signetics	54LS670	
	TI	**SN54LS670**	**716**
T54LS74	**Fairchild**	**54LS74**	
			608,612,621,623
	Motorola	**SN54LS74A**	**1126**
	National	DM54LS74	
		DM54LS74A	
	Signetics	54LS74	
	TI	**SN54LS74A**	**715**
T54LS83	**Fairchild**	**54LS83A**	
			608,612,621,623
	Motorola	**SN54LS83A**	**1132**
	National	DM54LS83A	
	Signetics	54LS83	
		54LS83A	
	TI	**SN54LS83A**	**715**
T54LS86	**Motorola**	**SN54LS86**	**1123**
	National	DM54LS86	
	Signetics	54LS86	
	TI	**SN54LS86A**	**715**
T54LS90	**Motorola**	**SN54LS90**	**1127**
	National	DM54LS90	
	Signetics	54LS90	
	TI	**SN54LS90**	**715**
T54LS92	**Motorola**	**SN54LS92**	**1127**
	National	DM54LS92	
	Signetics	54LS92	
	TI	**SN54LS92**	**715**
T54LS93	**Motorola**	**SN54LS93**	**1127**
	National	DM54LS93	
	Signetics	54LS93	
	TI	**SN54LS93**	**715**
T54LS95	**Fairchild**	**54LS95B**	
			608,612,621,623
	Motorola	**SN54LS95B**	**1128**
	National	DM54LS95B	
	Signetics	54LS95B	
	TI	SN54LS95B	
T74LS00	**Fairchild**	**74LS00**	**5311**
	Hitachi	HD74LS00	
	Motorola	**SN74LS00**	**1122**
	National	DM74LS00	
	Panasonic	DN74LS00	
	Signetics	**74LS00**	**1156**
	TI	SN74LS00	
T74LS02	**Fairchild**	**74LS02**	**5311**
	Hitachi	HD74LS02	
	Motorola	**SN74LS02**	**1122**
	National	DM74LS02	
	Panasonic	DN74LS02	
	Signetics	**74LS02**	**1156**
	TI	SN74LS02	
T74LS03	**Fairchild**	**74LS03**	**5311**
	Hitachi	HD74LS03	
	Motorola	**SN74LS03**	**1122**
	National	DM74LS03	
	Panasonic	DN74LS03	
	TI	SN74LS03	
T74LS04	**Fairchild**	**74LS04**	**5311**
	Hitachi	HD74LS04	
	Motorola	**SN74LS04**	**1124**
	National	DM74LS04	
	Panasonic	DN74LS04	
	Signetics	**74LS04**	**1156**
	TI	SN74LS04	
T74LS05	**Fairchild**	**74LS05**	**5311**
	Hitachi	HD74LS05	
	Motorola	**SN74LS05**	**1124**
	National	DM74LS05	
	Panasonic	DN74LS05	
	Signetics	**74LS05**	**1156**
	TI	SN74LS05	
T74LS08	**Fairchild**	**74LS08**	**5311**
	Hitachi	HD74LS08	
	Motorola	**SN74LS08**	**1122**
	National	DM74LS08	
	Panasonic	DN74LS08	
	Signetics	**74LS08**	**1156**
	TI	SN74LS08	
T74LS09	**Fairchild**	**74LS09**	**5311**
	Hitachi	HD74LS09	
	Motorola	**SN74LS09**	**1122**
	National	DM74LS09	
	Panasonic	DN74LS09	
	TI	SN74LS09	
T74LS10	**Fairchild**	**74LS10**	**5311**
	Hitachi	HD74LS10	
	Motorola	**SN74LS10**	**1122**
	National	DM74LS10	
	Panasonic	DN74LS10	
	Signetics	**74LS10**	**1156**
	TI	SN74LS10	
T74LS109	**Fairchild**	**74LS109**	**5311**
	Hitachi	HD74LS109	
	Motorola	SN74LS109	
		SN74LS109A	**1126**
	National	DM74LS109	
	Panasonic	DN74LS109	
	Signetics	**74LS109**	**1156**
	TI	SN74LS109A	
T74LS11	**Fairchild**	**74LS11**	**5311**
	Hitachi	HD74LS11	
	Motorola	**SN74LS11**	**1122**
	National	DM74LS11	
	Panasonic	DN74LS11	
	Signetics	**74LS11**	**1156**
	TI	SN74LS11	
T74LS112	**Fairchild**	**74LS112**	**5311**
	Hitachi	HD74LS112	
	Motorola	**SN74LS112A**	**1126**
	National	DM74LS112	
	Panasonic	DN74LS112	
	Signetics	**74LS112**	**1156**
	TI	SN74LS112A	
T74LS113	**Fairchild**	**74LS113**	**5311**
	Hitachi	HD74LS113	
	Motorola	**SN74LS113A**	**1126**
	National	DM74LS113	
	Panasonic	DN74LS113	
	Signetics	**74LS113**	**1156**
	TI	SN74LS113A	
T74LS114	**Fairchild**	**74LS114**	**5311**
	Hitachi	HD74LS114	
	Motorola	**SN74LS114A**	**1126**
	National	DM74LS114	
	Panasonic	DN74LS114	
	TI	SN74LS114A	
T74LS125	Fairchild	74LS125A	
	Motorola	**SN74LS125A**	**1124**
	National	DM74LS125	
	Panasonic	DN74LS125A	
	Signetics	**74LS125A**	**1157**
	TI	SN74LS125A	
T74LS126	**Fairchild**	**74LS126**	**5311**
	Motorola	**SN74LS126A**	**1124**
	National	DM74LS126	
	Signetics	**74LS126A**	**1157**
	TI	SN74LS126A	
T74LS13	**Fairchild**	**74LS13**	**5311**
	Hitachi	HD74LS13	
	Motorola	**SN74LS13**	**1125**
	National	DM74LS13	
	Panasonic	DN74LS13	
	Signetics	**74LS13**	**1156**
	TI	SN74LS13	
T74LS132	**Fairchild**	**74LS132**	**5311**
	Hitachi	HD74LS132	
	Motorola	**SN74LS132**	**1125**
	National	DM74LS132	
	Panasonic	DN74LS132	
	Signetics	**74LS132**	**1157**
	TI	SN74LS132	
T74LS136	**Fairchild**	**74LS136**	**5311**
	Hitachi	HD74LS136	
	Motorola	**SN74LS136**	**1123**
	National	DM74LS136	
	Panasonic	DN74LS136	
	Signetics	**74LS136**	**1157**
	TI	SN74LS136	
T74LS138	**Fairchild**	**74LS138**	**5311**
	Hitachi	HD74LS138	
	Motorola	**SN74LS138**	**1130**
	National	DM74LS138	
	Panasonic	DN74LS138	
	Signetics	**74LS138**	**1157**
	TI	SN74LS138	
T74LS139	**Fairchild**	**74LS139**	**5311**
	Hitachi	HD74LS139	
	Motorola	**SN74LS139**	**1130**
	National	DM74LS139	
	Panasonic	DN74LS139	
	Signetics	**74LS139**	**1157**
	TI	SN74LS139A	
T74LS15	**Fairchild**	**74LS15**	**5311**
	Motorola	**SN74LS15**	**1122**
	National	DM74LS15	
			(Continued)
T74LS15	Panasonic	DN74LS15	
	TI	SN74LS15	
T74LS151	**Fairchild**	**74LS151**	**5311**
	Hitachi	HD74LS151	
		HD74LS151A	
	Motorola	**SN74LS151**	**1129**
	National	DM74LS151	
	Panasonic	DN74LS151	
	Signetics	**74LS151**	**1157**
	TI	SN74LS151	
T74LS152	TI	SN74LS152	
T74LS153	**Fairchild**	**74LS153**	**5311**
	Hitachi	HD74LS153	
	Motorola	**SN74LS153**	**1129**
	National	DM74LS153	
	Panasonic	DN74LS153	
	Signetics	**74LS153**	**1157**
	TI	SN74LS153	
T74LS156	**Fairchild**	**74LS156**	**5311**
	Hitachi	HD74LS156	
	Motorola	**SN74LS156**	**1130**
	National	DM74LS156	
	Panasonic	DN74LS156	
	Signetics	**74LS156**	**1157**
	TI	SN74LS156	
T74LS157	**Fairchild**	**74LS157**	**5311**
	Hitachi	HD74LS157	
	Motorola	**SN74LS157**	**1129**
	National	DM74LS157	
	Panasonic	DN74LS157	
	Signetics	**74LS157**	**1157**
	TI	SN74LS157	
T74LS158	**Fairchild**	**74LS158**	**5311**
	Hitachi	HD74LS158	
	Motorola	**SN74LS158**	**1129**
	National	DM74LS158	
	Panasonic	DN74LS158	
	Signetics	**74LS158**	**1157**
	TI	SN74LS158	
T74LS160	**Fairchild**	**74LS160**	**5311**
	Hitachi	HD74LS160A	
	Motorola	**SN74LS160A**	**1127**
	National	DM74LS160	
	Panasonic	DN74LS160A	
	Signetics	74LS160	
		74LS160A	**1157**
	TI	SN74LS160A	
T74LS161	Fairchild	74LS161A	
	Hitachi	HD74LS161A	
	Motorola	**SN74LS161A**	**1127**
	National	DM74LS161	
	Panasonic	DN74LS161A	
	Signetics	**74LS161A**	**1157**
	TI	SN74LS161A	
T74LS162	**Fairchild**	**74LS162**	**5311**
	Hitachi	HD74LS162A	
	Motorola	**SN74LS162A**	**1127**
	National	DM74LS162	
	Panasonic	DN74LS162A	
	Signetics	**74LS162A**	**1157**
	TI	SN74LS162A	
T74LS163	**Fairchild**	**74LS163**	**5311**
	Hitachi	HD74LS163	
		HD74LS163A	
	Motorola	**SN74LS163A**	**1127**
	National	DM74LS163	
	Panasonic	DN74LS163A	
	Signetics	**74LS163A**	**1157**
	TI	SN74LS163A	
T74LS164	**Fairchild**	**74LS164**	**5311**
	Hitachi	HD74LS164	
	Motorola	SN74LS164A	
	National	DM74LS164	
	Panasonic	DN74LS164	
	Signetics	**74LS164**	**1157**
		74LS164A	
	TI	SN74LS164	
T74LS165	**Fairchild**	**74LS165**	**5311**
	Motorola	**SN74LS165**	**1128**
	TI	SN74LS165A	
T74LS168	**Fairchild**	**74LS168**	**5311**
T74LS169	**Fairchild**	**74LS169**	**5311**
	Hitachi	HD74LS169	
	Motorola	**SN74LS169**	**1127**
	National	DM74LS169	
	Signetics	**74LS169A**	**1157**
	TI	SN74LS169	
T74LS170	**Fairchild**	**74LS170**	**5311**
	Motorola	**SN74LS170**	**1128**
	National	DM74LS170	
	Panasonic	DN74LS170	
			(Continued)

◆ Discontinued

The manufacturers report their devices can be used as direct replacements.
Performance details often differ, so compare the specifications considering your requirements.

SGS Semiconductor (Cont'd)

Manufacturer Device	Replacement Source	Device	IC Master Page
T74LS170	**Signetics**	**74LS170**	**1157**
	TI	SN74LS170	
T74LS173	Fairchild	74LS173	
	Motorola	**SN74LS173A**	**1126**
	National	DM74LS173	
	Panasonic	DN74LS173	
	Signetics	**74LS173**	**1157,1158**
	TI	SN74LS173A	
T74LS174	**Fairchild**	**74LS174**	**5311**
	Hitachi	HD74LS174	
	Motorola	**SN74LS174**	**1126**
	National	DM74LS174	
	Panasonic	DN74LS174	
	Signetics	**74LS174**	**1157**
	TI	SN74LS174	
T74LS175	**Fairchild**	**74LS175**	**5311**
	Hitachi	HD74LS175	
	Motorola	**SN74LS175**	**1126**
	Panasonic	DN74LS175	
	Signetics	74LS175	
	TI	SN74LS175	
T74LS181	**Fairchild**	**74LS181**	**5311**
	Hitachi	HD74LS181	
	Motorola	**SN74LS181**	**1132**
	Signetics	**74LS181**	**1157**
	TI	SN74LS181	
T74LS190	Fairchild	74LS190	
	Hitachi	HD74LS190	
	Motorola	**SN74LS190**	**1127**
	National	DM74LS190	
	Panasonic	DN74LS190	
	TI	SN74LS190	
T74LS191	Fairchild	74LS191	
	Hitachi	HD74LS191	
	Motorola	**SN74LS191**	**1127**
	National	DM74LS191	
	Panasonic	DN74LS191	
	Signetics	**74LS191**	**1157**
	TI	SN74LS191	
T74LS192	**Fairchild**	**74LS192**	**5311**
	Hitachi	HD74LS192	
	Motorola	**SN74LS192**	**1127**
	National	DM74LS192	
	Panasonic	DN74LS192	
	Signetics	**74LS192**	**1157**
	TI	SN74LS192	
T74LS193	**Fairchild**	**74LS193**	**5311**
	Hitachi	HD74LS193	
	Motorola	**SN74LS193**	**1127**
	National	DM74LS193	
	Panasonic	DN74LS193	
	Signetics	**74LS193**	**1157**
	TI	SN74LS193	
T74LS194A	**Fairchild**	**74LS194A**	**5311**
	Hitachi	HD74LS194A	
	Motorola	**SN74LS194A**	**1128**
	National	DM74LS194	
	Panasonic	DN74LS194A	
	Signetics	**74LS194A**	**1157**
	TI	SN74LS194A	
T74LS195A	**Fairchild**	**74LS195A**	**5311**
	Hitachi	HD74LS195A	
	Motorola	**SN74LS195A**	**1128**
	National	DM74LS195	
	Panasonic	DN74LS195A	
	SGS	L7924	
	Signetics	**74LS195A**	**1157**
	TI	SN74LS195A	
T74LS197	**Fairchild**	**74LS197**	**5311**
	Hitachi	HD74LS197	
	Motorola	**SN74LS197**	**1127**
	National	DM74LS197	
	Panasonic	DN74LS197	
	Signetics	**74LS197**	**1157**
	TI	SN74LS197	
T74LS20	**Fairchild**	**74LS20**	**5311**
	Hitachi	HD74LS20	
	Motorola	**SN74LS20**	**1122**
	National	DM74LS20	
	Panasonic	DN74LS20	
	Signetics	**74LS20**	**1156**
	TI	SN74LS20	
T74LS21	**Fairchild**	**74LS21**	**5311**
	Hitachi	HD74LS21	
	Motorola	**SN74LS21**	**1122**
	National	DM74LS21	
	Panasonic	DN74LS21	
	Signetics	**74LS21**	**1156**
	TI	SN74LS21	
T74LS22	Fairchild	74LS22	
	Hitachi	HD74LS22	
	Motorola	**SN74LS22**	**1122**
	National	DM74LS22	
	Panasonic	DN74LS22	
	TI	SN74LS22	
T74LS240	**Fairchild**	**74LS240**	**5311**
	Hitachi	HD74LS240	
	MMI	SN74LS240	
	Motorola	**SN74LS240**	**1124**
	Panasonic	DN74LS240	
	Signetics	**74LS240**	**1157**
	TI	SN74LS240	
T74LS241	**Fairchild**	**74LS241**	**5311**
	Hitachi	HD74LS241	
	MMI	SN74LS241	
	Motorola	**SN74LS241**	**1124**
	Panasonic	DN74LS241	
	Signetics	**74LS241**	**1157**
	TI	SN74LS241	
T74LS244	**Fairchild**	**74LS244**	**5311**
	Hitachi	HD74LS244	
	MMI	SN74LS244	
	Motorola	**SN74LS244**	**1124**
	Panasonic	DN74LS244	
	Signetics	**74LS244**	**1158**
	TI	SN74LS244	
T74LS248	**Fairchild**	**74LS248**	**5311**
	Hitachi	HD74LS248	
	Motorola	**SN74LS248**	**1130**
	National	DM74LS248	
	TI	SN74LS248	
T74LS249	**Fairchild**	**74LS249**	**5311**
	Hitachi	HD74LS249	
	Motorola	**SN74LS249**	**1130**
	National	DM74LS249	
	TI	SN74LS249	
T74LS251	**Fairchild**	**74LS251**	**5311**
	Hitachi	HD74LS251	
	Motorola	**SN74LS251**	**1129**
	National	DM74LS251	
	Panasonic	DN74LS251	
	Signetics	**74LS251**	**1158**
	TI	SN74LS251	
T74LS253	**Fairchild**	**74LS253**	**5311**
	Hitachi	HD74LS253	
	Motorola	**SN74LS253**	**1129**
	National	DM74LS253	
		DM8214	
	Panasonic	DN74LS253	
	Signetics	**74LS253**	**1158**
	TI	SN74LS253	
T74LS256	TI	SN74LS256	
T74LS257	Fairchild	74LS257A	
	Hitachi	HD74LS257	
	Motorola	**SN74LS257A**	**1129**
	National	DM74LS257	
	Signetics	74LS257	
		74LS257A	**1158**
	TI	SN74LS257B	
T74LS258	Fairchild	74LS258A	
	Hitachi	HD74LS258	
	Motorola	**SN74LS258A**	**1129**
	National	DM74LS258	
	Panasonic	DN74LS258A	
	Signetics	74LS258	
	TI	SN74LS258B	
T74LS259	**Fairchild**	**74LS259**	**5311**
	Motorola	**SN74LS259**	**1126**
	Signetics	**74LS259**	**1158**
	TI	SN74LS259B	
T74LS26	**Fairchild**	**74LS26**	**5311**
	Hitachi	HD74LS26	
	Motorola	**SN74LS26**	**1122**
	National	DM74LS26	
	Panasonic	DN74LS26	
	Signetics	**74LS26**	**1156**
	TI	SN74LS26	
T74LS260	Panasonic	DN74LS260	
	TI	SN74LS260	
T74LS266	**Fairchild**	**74LS266**	**5311**
	Motorola	**SN74LS266**	**1123**
	National	DM74LS266	
	Panasonic	DN74LS266	
	Raytheon	RC8242	
	Signetics	**74LS266**	**1158**
		N8242	**1175**
	TI	SN74LS266	
T74LS27	**Fairchild**	**74LS27**	**5311**
	Hitachi	HD74LS27	
	Motorola	**SN74LS27**	**1122**
	National	DM74LS27	
	Panasonic	DN74LS27	
	Signetics	**74LS27**	**1156**
	TI	SN74LS27	
T74LS273	**Fairchild**	**74LS273**	**5311**
	MMI	SN74LS273	
	Motorola	**SN74LS273**	**1126**
	Signetics	74LS273	
	TI	SN74LS273	
T74LS279	**Fairchild**	**74LS279**	**5311**
	Hitachi	HD74LS279	
	Motorola	**SN74LS279**	**1126**
	National	DM74LS279	
	Panasonic	DN74LS279	
	Signetics	74LS279	
	TI	SN74LS279A	
T74LS28	**Fairchild**	**74LS28**	**5311**
	Motorola	**SN74LS28**	**1122**
	TI	SN74LS28	
T74LS280	Hitachi	HD74LS280	
	Motorola	**SN74LS280**	**1132**
	Panasonic	DN74LS280	
	TI	SN74LS280	
T74LS283	**Fairchild**	**74LS283**	**5311**
	Hitachi	HD74LS283	
		HD74LS283A	
	Motorola	**SN74LS283**	**1132**
	National	DM74LS283	
	Panasonic	DN74LS283	
	Signetics	**74LS283**	**1158**
	TI	SN74LS283	
T74LS290	**Fairchild**	**74LS290**	**5311**
	Hitachi	HD74LS290	
	Motorola	**SN74LS290**	**1127**
	National	DM74LS290	
	Panasonic	DN74LS290	
	Signetics	**74LS290**	**1158**
	TI	SN74LS290	
T74LS292	TI	SN74LS292	
T74LS293	**Fairchild**	**74LS293**	**5311**
	Hitachi	HD74LS293	
	Motorola	**SN74LS293**	**1127**
	National	DM74LS293	
	Panasonic	DN74LS293	
	Signetics	**74LS293**	**1158**
	TI	SN74LS293	
T74LS295A	**Fairchild**	**74LS295A**	**5311**
	Motorola	**SN74LS295A**	**1129**
	Signetics	74LS295A	
		74LS295B	**1158**
	TI	SN74LS295B	
T74LS298	**Fairchild**	**74LS298**	**5311**
	Hitachi	HD74LS298	
	Motorola	**SN74LS298**	**1129**
	Signetics	**74LS298**	**1158**
	TI	SN74LS298	
T74LS299	AMD	SN74LS299	
	Fairchild	**74LS299**	**5311**
	Hitachi	HD74LS299	
	Motorola	**SN74LS299**	**1129**
	TI	SN74LS299	
T74LS30	**Fairchild**	**74LS30**	**5311**
	Hitachi	HD74LS30	
	Motorola	**SN74LS30**	**1122**
	National	DM74LS30	
	Panasonic	DN74LS30	
	Signetics	**74LS30**	**1156**
	TI	SN74LS30	
T74LS33	**Fairchild**	**74LS33**	**5311**
	Motorola	**SN74LS33**	**1122**
	Panasonic	DN74LS33	
	Signetics	**74LS33**	**1156**
	TI	SN74LS33	
T74LS352	**Fairchild**	**74LS352**	**5311**
	Motorola	**SN74LS352**	**1129**
	National	DM74LS352	
	TI	SN74LS352	
T74LS353	**Fairchild**	**74LS353**	**5311**
	Motorola	**SN74LS353**	**1129**
	National	DM74LS353	
	TI	SN74LS353	
T74LS365	Fairchild	74LS365A	
	Motorola	**SN74LS365A**	**1124**
	National	DM74LS365	
	Panasonic	DN74LS365A	
	SGS	T74LS365A	
	Signetics	74LS365	
		74LS365A	**1158**
	TI	SN74LS365A	
T74LS365A	Fairchild	74LS365A	
	Motorola	**SN74LS365A**	**1124**
	National	DM74LS365	
	Panasonic	DN74LS365A	
	SGS	T74LS365	
	Signetics	74LS365	
		74LS365A	**1158**
	TI	SN74LS365A	
T74LS366	Fairchild	74LS366A	
	Motorola	**SN74LS366A**	**1124**
	National	DM74LS366	
	Panasonic	DN74LS366A	
	SGS	T74LS366A	
	Signetics	**74LS366A**	**1158**
	TI	SN74LS366A	
T74LS366A	Fairchild	74LS366A	
	Motorola	**SN74LS366A**	**1124**
	National	DM74LS366	
	Panasonic	DN74LS366A	
	SGS	T74LS366	
	Signetics	**74LS366A**	**1158**
	TI	SN74LS366A	
T74LS367	Fairchild	74LS367A	
	Hitachi	HD74LS367	
		HD74LS367A	
	Motorola	**SN74LS367A**	**1124**
	National	DM74LS367	
	Panasonic	DN74LS367A	
	SGS	T74LS367A	
	Signetics	74LS367	
		74LS367A	**1158**
	TI	SN74LS367A	
T74LS367A	Fairchild	74LS367A	
	Hitachi	HD74LS367	
		HD74LS367A	
	Motorola	**SN74LS367A**	**1124**
	National	DM74LS367	
	Panasonic	DN74LS367A	
	SGS	T74LS367	
	Signetics	74LS367	
		74LS367A	**1158**
	TI	SN74LS367A	
T74LS368	Fairchild	74LS368A	
	Hitachi	HD74LS368	
	Motorola	**SN74LS368A**	**1124**
	National	DM74LS368	
	Panasonic	DN74LS368A	
	Signetics	74LS368	
		74LS368A	**1158**
	TI	SN74LS368A	
T74LS37	**Fairchild**	**74LS37**	**5311**
	Hitachi	HD74LS37	
	Motorola	**SN74LS37**	**1122**
	National	DM74LS37	
	Panasonic	DN74LS37	
	Signetics	**74LS37**	**1156**
	TI	SN74LS37	
T74LS373	**Fairchild**	**74LS373**	**5311**
	MMI	SN74LS373	
	Motorola	**SN74LS373**	**1126**
	Panasonic	DN74LS373	
	Signetics	**74LS373**	**1158**
	TI	SN74LS373	
T74LS374	**Fairchild**	**74LS374**	**5311**
	MMI	SN74LS374	
	Motorola	**SN74LS374**	**1126**
	National	DM74LS374	
	Signetics	**74LS374**	**1158**
	TI	SN74LS374	
T74LS377	**Fairchild**	**74LS377**	**5311**
	MMI	SN74LS377	
	Motorola	**SN74LS377**	**1126**
	Signetics	**74LS377**	**1158**
	TI	SN74LS377	
T74LS378	AMD	SN74LS378	
	Fairchild	**74LS378**	**5311**
	Motorola	**SN74LS378**	**1126**
	Signetics	**74LS378**	**1158**
	TI	SN74LS378	
T74LS379	AMD	SN74LS379	
	Fairchild	**74LS379**	**5311**
	Motorola	**SN74LS379**	**1126**
	TI	SN74LS379	
T74LS38	**Fairchild**	**74LS38**	**5311**
	Hitachi	HD74LS38	
	Motorola	**SN74LS38**	**1122**
	National	DM74LS38	
	Panasonic	DN74LS38	
	Signetics	**74LS38**	**1156**
	TI	SN74LS38	
T74LS390	**Fairchild**	**74LS390**	**5311**
	Motorola	**SN74LS390**	**1127**
	Panasonic	DN74LS390	
	TI	SN74LS390	
T74LS393	**Fairchild**	**74LS393**	**5311**
	Motorola	**SN74LS393**	**1127**

(Continued)

◆ Discontinued

Bold face device numbers indicate manufacturers data is provided in the IC Master on the pages noted.

SGS Semiconductor (Cont'd)

Manufacturer Device	Replacement Source	Device	IC Master Page
T74LS393	Panasonic	DN74LS393	
	Signetics	**74LS393**	**1158**
	TI	SN74LS393	
T74LS395	**Fairchild**	**74LS395**	**5311**
	National	DM74LS395	
	Panasonic	DN74LS395A	
	Signetics	74LS395	
	TI	SN74LS395A	
T74LS399	AMD	SN74LS399	
	Motorola	**SN74LS399**	**1129**
	TI	SN74LS399	
T74LS40	**Fairchild**	**74LS40**	**5311**
	Hitachi	HD74LS40	
	Motorola	**SN74LS40**	**1122**
	National	DM74LS40	
	Panasonic	DN74LS40	
	Signetics	**74LS40**	**1156**
	TI	SN74LS40	
T74LS42	**Fairchild**	**74LS42**	**5311**
	Hitachi	HD74LS42	
	Motorola	**SN74LS42**	**1130**
	National	DM74LS42	
	Panasonic	DN74LS42	
	Signetics	**74LS42**	**1156**
	TI	SN74LS42	
T74LS47	**Fairchild**	**74LS47**	**5311**
	Hitachi	HD74LS47	
	Motorola	**SN74LS47**	**1130**
	National	DM74LS47	
	TI	SN74LS47	
T74LS48	**Fairchild**	**74LS48**	**5311**
	Hitachi	HD74LS48	
	Motorola	**SN74LS48**	**1130**
	National	DM74LS48	
	Signetics	74LS48	
	TI	SN74LS48	
T74LS49	Fairchild	74LS49	
	Hitachi	HD74LS49	
	Motorola	**SN74LS49**	**1130**
	National	DM74LS49	
	TI	SN74LS49	
T74LS490	**Fairchild**	**74LS490**	**5311**
	Motorola	**SN74LS490**	**1127**
	Panasonic	DN74LS490	
	Signetics	**74LS490**	**1159**
	TI	SN74LS490	
T74LS51	**Fairchild**	**74LS51**	**5311**
	Hitachi	HD74LS51	
	Motorola	**SN74LS51**	**1123**
	National	DM74LS51	
	Panasonic	DN74LS51	
	Signetics	**74LS51**	**1156**
	TI	SN74LS51	
T74LS54	**Fairchild**	**74LS54**	**5311**
	Hitachi	HD74LS54	
	Motorola	**SN74LS54**	**1123**
	National	DM74LS54	
	Panasonic	DN74LS54	
	Signetics	**74LS54**	**1156**
	TI	SN74LS54	
T74LS55	**Fairchild**	**74LS55**	**5311**
	Hitachi	HD74LS55	
	Motorola	**SN74LS55**	**1123**
	National	DM74LS55	
	Panasonic	DN74LS55	
	TI	SN74LS55	
T74LS670	**Fairchild**	**74LS670**	**5311**
	Motorola	**SN74LS670**	**1128**
	National	DM74LS670	
	Signetics	74LS670	
	TI	SN74LS670	
T74LS74	**Fairchild**	**74LS74**	**5311**
	Hitachi	HD74LS74	
		HD74LS74A	
	Motorola	**SN74LS74A**	**1126**
	National	DM74LS74	
	Panasonic	DN74LS74A	
	Signetics	74LS74	
	TI	SN74LS74A	
T74LS83	Fairchild	74LS83A	
	Hitachi	HD74LS183A	
		HD74LS83A	
	Motorola	**SN74LS83A**	**1132**
	National	DM74LS83A	
	Panasonic	DN74LS83A	
	Signetics	74LS83	
		74LS83A	**1156**
	TI	SN74LS83A	
T74LS86	**Fairchild**	**74LS86**	**5311**
	Hitachi	HD74LS86	
			(Continued)
T74LS86	**Motorola**	**SN74LS86**	**1123**
	National	DM74LS86	
	Panasonic	DN74LS86	
	Signetics	**74LS86**	**1156**
	TI	SN74LS86A	
T74LS90	**Fairchild**	**74LS90**	**5311**
	Motorola	**SN74LS90**	**1127**
	National	DM74LS90	
	Panasonic	DN74LS90	
	Signetics	**74LS90**	**1156**
	TI	SN74LS90	
T74LS92	**Fairchild**	**74LS92**	**5311**
	Hitachi	HD74LS92	
	Motorola	**SN74LS92**	**1127**
	National	DM74LS92	
	Panasonic	DN74LS92	
	Signetics	**74LS92**	**1156**
	TI	SN74LS92	
T74LS93	**Fairchild**	**74LS93**	**5311**
	Hitachi	HD74LS93	
	Motorola	**SN74LS93**	**1127**
	National	DM74LS93	
	Panasonic	DN74LS93	
	Signetics	**74LS93**	**1156**
	TI	SN74LS93	
T74LS95	**Fairchild**	**74LS95B**	**5311**
	Hitachi	HD74LS95B	
	Motorola	**SN74LS95B**	**1128**
	National	DM74LS95B	
	Panasonic	DN74LS95B	
	SGS	T74LS95B	
	Signetics	**74LS95B**	**1156**
	TI	SN74LS95B	
T74LS95B	**Fairchild**	**74LS95B**	**5311**
	Hitachi	HD74LS95B	
	Motorola	**SN74LS95B**	**1128**
	National	DM74LS95B	
	Panasonic	DN74LS95B	
	SGS	T74LS95	
	Signetics	**74LS95B**	**1156**
	TI	SN74LS95B	
TBA231	Exar	XR4739	
	Fairchild	μA739	
		μA749	
	National	LM1303	
	Raytheon	RC4739	
	TI	SN76131	
		SN76149	
TBA331	Fairchild	UA3046	
	Motorola	**MC3346**	**3614**
	National	LM3046	
	Plessey	SL3046	
		SL3146	
	RCA	**CA3046**	**3678**
		CA3146	**3678**
	Sanyo	LA3046	
	SGS	CA3046	
	SiliconG	SG3046	
		SG3146	
		SG3821	
	Sprague	ULN-2046	
	ThomsonCSF	SFC	
TBA800	Fairchild	TBA800	
	Plessey	TBA800	
	Telefunken	TDA800	
	ThomsonCSF	TBA800	
TBA810	Fairchild	TBA810	
	Telefunken	TDA810	
TBA820	MCE	MCE-820	
	TI	SN76001	
	ThomsonCSF	TBA820	
TBA830	ThomsonCSF	TBA830	
TCA900	ThomsonCSF	TCA900	
TDA1170	Fairchild	μA7327	
	Sprague	ULN-2270	
	Telefunken	TDA1170	
	ThomsonCSF	TDA1170	
TDA1190	RCA	CA1190	
	SGS	TDA1190Z	
		TDA3190	
	Sprague	ULN-2290	
TDA1190Z	RCA	CA1190	
	SGS	TDA1190	
		TDA3190	
	Sprague	ULN-2290	
TDA2002	Hitachi	TDA2002	
	NEC	μPC2002	
TDA2004	Sprague	ULN-3702	
TDA2005	NEC	μPC2005	
TDA2006	ThomsonCSF	TDA2006	
TDA2030	Telefunken	TDA2030	
	ThomsonCSF	TDA2030	
TDA2140	Telefunken	TDA2140	
TDA2151	Telefunken	TDA2151	
TDA2161	Telefunken	TDA2161	
TDA3190	RCA	CA1190	
	SGS	TDA1190	
		TDA1190Z	
	Sprague	ULN-2290	
TDA440	National	TDA440	
	Plessey	TDA440	
TL074	TI	TL074	
TL082	**Exar**	**XR082**	**3555**
	RCA	**CA082**	**3672,3676**
	TI	TL082	
	ThomsonCSF	TDB0353	
TL084	Exar	XR084	
	Fairchild	μAF774	
	RCA	**CA084**	**3672,3676**
	TI	TL084	
TL74LS133	**Fairchild**	**74LS133**	**5311**
	Motorola	**SN74LS133**	**1122**
TS4LS393	**TI**	**SN54LS399**	**716**
UC1524A	Cherry	CS1524	
	Exar	**XR1524**	**3558**
	IPS	**IP1524**	**3599**
	LinearTech	LT1524	
	National	LM1524	
	RCA	CA1524	
	SGS	SG1524	
	SiliconG	SG1524	
	Sprague	ULS-8124	
	TI	**SG1524**	**720**
	Unitrode	**UC1524A**	**3739,3739**
UC1840	SiliconG	SG1840	
	Unitrode	**UC1840**	**3739**
UC2524A	Cherry	CS2524	
	Exar	XR2524	
	IPS	**IP2524**	**3599**
	RCA	CA2524	
	SGS	SG2524	
	SiliconG	SG2524	
	Sprague	ULQ-8124	
	TI	SG2524	
	Unitrode	**UC2524A**	**3739,3739**
UC2840	SiliconG	SG2840	
	Unitrode	**UC2840**	**3739**
UC3524A	Cherry	CS3524	
	Exar	**XR3524**	**3558**
	IPS	**IP3524**	**3599**
		IP3524B	**3599**
	National	LM3524	
	RCA	CA3524	
	SGS	SG3524	
	Signetics	**SG3524**	**3715,3720,3730**
	SiliconG	SG3524B	
	Sprague	ULN-8124	
	TI	SG3524	
	Unitrode	**UC3524A**	**3739,3739**
UC3840	**Unitrode**	**UC3840**	**3739**
UC3842	**Unitrode**	**UC3842**	**3739**
UC3846	**Unitrode**	**UC3846**	**3739**
UC3847	**Unitrode**	**UC3847**	**3739**
ULN2001	Exar	XR2001	
		XR2001C	
		XR2201C	
	Mitsubishi	M54524	
	Motorola	**MC1411**	**3212**
		ULN2001	**3212**
	NEC	μPA2001	
	RIFA	PBD3523-11	
	Sanyo	LB1231	
	SGS	L201	
	SiliconG	SG2001	
	Sprague	**ULN-2001**	**3269**
		ULQ-2001	
	TI	ULN2001A	
	Toshiba	TD62001	
		TD62101	
ULN2001A	Sprague	ULN2001A	
ULN2002	Exar	XR2002C	
		XR2202C	
	Fairchild	MC1412	
	Mitsubishi	M54525	
	Motorola	**MC1412**	**3212**
		ULN2002	**3212**
	NEC	μPA2002	
	RIFA	PBD352304	
	Sanyo	LB1232	
	SGS	L202	
			(Continued)
ULN2002	Signetics	NE5602	
	SiliconG	SG2002	
	Sprague	ULN-2002	
	TI	ULN2002A	
	Toshiba	TD62002	
ULN2003	Exar	XR2003C	
		XR2203C	
	Fairchild	MC1413	
	Mitsubishi	M54523	
	Motorola	**MC1413**	**3212**
		ULN2003	**3212**
	NEC	μPA2003	
	RIFA	PBD352303	
	Sanyo	LB1233	
	SGS	L203	
	Signetics	NE5603	
		ULN2003	**3721**
	SiliconG	SG2003	
	Sprague	ULN-2003	
	Telefunken	TDA2003	
	TI	ULN2003A	
	Toshiba	TD62003	
		TD62103	
ULN2003A	Sprague	ULN2003A	
ULN2004	Exar	XR2204C	
	Mitsubishi	M54526	
	Motorola	**MC1416**	**3212**
		ULN2004	**3212**
	NEC	μPA2004	
	RIFA	PBD352302	
	Sanyo	LB1234	
	SGS	L204	
	Signetics	NE5604	
		ULN2004	**3721**
	SiliconG	SG2004	
	Sprague	ULN-2004	
		ULS-2004	
	TI	ULN2004A	
	Toshiba	TD62004	
		TD62104	
ULN2004A	Sprague	ULN2004A	
ULN2064	**IPS**	**IP2064**	**3599**
	Mitsubishi	M54532	
	Motorola	ULN2064	
	Sprague	ULN-2064	
	TI	SN75064	
		ULN2064	
	Toshiba	TD62064	
ULN2065	**IPS**	**IP2065**	**3599**
	Motorola	ULN2065	
	Sprague	ULN-2065	
	TI	SN75065	
		ULN2065	
ULN2066	**IPS**	**IP2066**	**3599**
	Motorola	ULN2066	
	Sprague	ULN-2066	
	TI	SN75066	
		ULN2066	
ULN2067	**IPS**	**IP2067**	**3599**
	Motorola	ULN2067	
	Sprague	ULN-2067	
	TI	SN75067	
		ULN2067	
ULN2068	**IPS**	**IP2068**	**3599**
	Motorola	**ULN2068**	**3212**
	Sprague	ULN-2068	
	TI	SN75068	
		ULN2068	
ULN2069	**IPS**	**IP2069**	**3599**
	Motorola	ULN2069	
	Sprague	ULN-2069	
	TI	SN75069	
		ULN2069	
ULN2070	Sprague	ULN-2070	
ULN2071	Sprague	ULN-2071	
ULN2074	**IPS**	**IP2074**	**3599**
	Motorola	**ULN2074**	**3212**
	Sprague	ULN-2074	
	TI	SN75074	
		ULN2074	
	Toshiba	TD62074	
ULN2075	**IPS**	**IP2075**	**3599**
	Motorola	ULN2075	
	Sprague	ULN-2075	
	TI	SN75075	
		ULN2075	
ULN2076	Sprague	ULN-2076	
ULN2077	Sprague	ULN-2077	
ULN2801	**Motorola**	**ULN2801**	**3212**
	RIFA	PBD353811	
	Sprague	ULN-2801	
	Toshiba	TD62081	

◆ Discontinued

The manufacturers report their devices can be used as direct replacements.
Performance details often differ, so compare the specifications considering your requirements.

SGS Semiconductor (Cont'd)

Manufacturer Device	Replacement Source	Device	IC Master Page
ULN2802	**Motorola**	**ULN2802**	3212
	RIFA	PBD353814	
	Sprague	ULN-2802	
	Toshiba	TD62082	
ULN2803	**Motorola**	**ULN2803**	3212
	RIFA	PBD353813	
	Sprague	ULN-2803	
	Toshiba	TD62083	
ULN2804	**Motorola**	**ULN2804**	3212
	RIFA	PBD353812	
	Sprague	ULN-2804	
	Toshiba	TD62084	
ULN2805	Sprague	ULN-2805	
ULQ2001	Fairchild	μA9665	
ULQ2002	Fairchild	μA9666	
ULQ2003	Fairchild	μA9667	
ULQ2004	Fairchild	μA9668	
Z284C40	**Toshiba**	**TMPZ84C40**	1750
	Zilog	Z8440	
		Z84C40	1774
Z8	Zilog	Z8	
Z80-CTC	Mostek	MK3882	
	SGS	Z8430	
	Sharp	LH-0082	
	Zilog	Z80-CTC	
		Z8430	
Z80-DART	SGS	Z8470	
	Zilog	Z80-DART	
		Z8470	
Z80-DMA	Mostek	MK3883	
	SGS	Z8410	
	Sharp	LH-0083	
	Zilog	Z80-DMA	
		Z8410	
Z80-PIO	Mostek	MK3881	
	SGS	Z8420	
	Sharp	LH-0081	
	Zilog	Z80-PIO	
		Z8420	
Z80-SIO	Mostek	MK3884	
		MK3885	
		MK3887	
	SGS	Z8440	
		Z8441	
		Z8442	
	Sharp	LH-0084	
	Zilog	Z80-SIO	
		Z8440	
		Z8441	
		Z8442	
Z8001	AMD	Z8001	
	Zilog	Z8001	
Z8002	AMD	Z8002	
	Zilog	Z8002	
Z8010	AMD	Z8010	
	Zilog	Z8010	
Z8030	AMD	Z8030	
	Zilog	Z8030	
Z8031	Zilog	Z8031	
Z8036	AMD	Z8036	
	Zilog	Z8036	
Z8038	AMD	Z8038	
	Zilog	Z8038	
Z8060	AMD	Z8060	
	Zilog	Z8060	
Z8090	Zilog	Z8090	
Z8400	SGS	Z84C00	
	Sharp	LH-0080	
	Toshiba	**TMPZ84C00**	1750
	Zilog	Z8400	
		Z84C00	1773
Z8410	Mostek	MK3883	
	SGS	Z80-DMA	
	Sharp	LH-0083	
	Zilog	Z80-DMA	
		Z8410	
Z8420	Mostek	MK3881	
	SGS	Z80-PIO	
	Sharp	LH-0081	
	Zilog	Z80-PIO	
		Z8420	
Z8430	Mostek	MK3882	
	SGS	Z80-CTC	
	Sharp	LH-0082	
	Zilog	Z80-CTC	
		Z8430	
Z8440	Mostek	MK3884	
		MK3885	
		MK3887	
	SGS	Z80-SIO	
Z8440	SGS	Z8441	
		Z8442	
	Sharp	LH-0084	
	Zilog	Z80-SIO	
		Z8440	
		Z8441	
		Z8442	
Z8441	Mostek	MK3884	
		MK3885	
		MK3887	
	SGS	Z80-SIO	
		Z8440	
		Z8442	
	Sharp	LH-0084	
	Zilog	Z80-SIO	
		Z8440	
		Z8441	
		Z8442	
Z8442	Mostek	MK3884	
		MK3885	
		MK3887	
	SGS	Z80-SIO	
		Z8440	
		Z8441	
	Sharp	LH-0084	
	Zilog	Z80-SIO	
		Z8440	
		Z8441	
		Z8442	
Z8449	Zilog	Z8449	
Z8470	SGS	Z80-DART	
	Zilog	Z80-DART	
		Z8470	
Z84C00	SGS	Z8400	
	Sharp	LH-0080	
	Toshiba	**TMPZ84C00**	1750
	Zilog	Z8400	
		Z84C00	1773
Z84C10	**Toshiba**	**TMPZ84C10**	1750
	Zilog	Z8410	
		Z84C10	
Z84C20	**Toshiba**	**TMPZ84C20**	1750
	Zilog	**Z84C20**	1773
Z84C30	**Toshiba**	**TMPZ84C30**	1750
	Zilog	**Z84C30**	1773
Z84C41	**Toshiba**	**TMPZ84C41**	1750
	Zilog	**Z84C41**	1774
Z84C42	**Toshiba**	**TMPZ84C42**	1750
	Zilog	**Z84C42**	1774
Z8530	AMD	Z8530	
	Zilog	Z8530	
Z8531	Zilog	Z8531	
Z8536	AMD	Z8536	
	Zilog	Z8536	
Z8538	Zilog	Z8538	
Z8601	Sharp	Z8601	
	Zilog	Z8601	
Z8611	Sharp	Z8611	
	Zilog	Z8611	
Z8612	Zilog	Z8612	
Z8671	Zilog	Z8671	
Z8681	Sharp	Z8681	
	Zilog	Z8681	
Z8682	Zilog	Z8682	

Sharp

Manufacturer Device	Replacement Source	Device	IC Master Page
LH-0080	SGS	Z8400	
		Z84C00	
	Toshiba	**TMPZ84C00**	1750
	Zilog	Z8400	
		Z84C00	1773
LH-0081	Mostek	MK3881	
	SGS	Z80-PIO	
		Z8420	
	Zilog	Z80-PIO	
		Z8420	
LH-0082	Mostek	MK3882	
	SGS	Z80-CTC	
		Z8430	
	Zilog	Z80-CTC	
		Z8430	
LH-0083	Mostek	MK3883	
	SGS	Z80-DMA	
		Z8410	
	Zilog	Z80-DMA	
		Z8410	
LH-0084	Mostek	MK3884	
		MK3885	
		MK3887	
	SGS	Z80-SIO	
		Z8440	
LH-0084	SGS	Z8441	
		Z8442	
	Zilog	Z80-SIO	
		Z8440	
		Z8441	
		Z8442	
LH2332	AMD	AM9232	
	CSG	MPS2332	
	Fairchild	F3532	
	GI	R03-9332	
	GouldAMI	S2333	
		S68A332	
	GTEMicro	G2332	
	Hitachi	HN46332	
	Intech	IM7332	
	Intel	2332	
	Mitsubishi	M58333	
	Motorola	**MCM68A332**	4120
	National	NM52132	
	NCR	NCR2332	
	NEC	UPD2332A	
	Panasonic	MN2332	
	RCA	**CDM5333**	1673,1677
	Rockwell	R2332	
	SGS	M2332	
	Siemens	SA88332	
		SAB8332	
	Signetics	2332	
		2632A	
	SiliconG	SG3532	
	SSS	SCM23C32	
	SMC	ROM4732	
	Supertex	23SC32	
		CM3200	
	Synertek	SY2332	
	TI	TM2332	
		TMS2332	
		TMS4732	
	Toshiba	TMM2332	
		TMM333P	
	VTI	VT2332	
LH2364A	AMD	AM9264	
	GouldAMI	S2364	
		S68A364	
	Hitachi	HN48364	
	Motorola	**MCM68364**	4120
	NCR	NCR2364	
	OKI	**MSM3864**	4733
	Plessey	SL2364C	
	S-MOS	**SMM2364**	4178
	Signetics	2364	
	Synertek	SYM2364	
	TI	TMS2364	
		TMS4764	
	Toshiba	TMM2364	
	VTI	VT2364	
	Weitek	SC8164	
LH5101	GouldAMI	S5101	
		S6501	
	Harris	MH6501	
	Hitachi	HM435101	
	Intel	5101	
	Motorola	MCM5101	
		MCMS1L01	
	National	MM74C920	
	Panasonic	MNS101	
	RCA	**MWS5101**	1673,1676
	SSS	SCM5101	
	Synertek	SY2101	
	Toshiba	TC5501	
LH5164	AMD	AM9988	
		AM9988C	
	Cypress	CY7C186	
	Fujitsu	MB8464	
		MB8464A	
	Hitachi	HM6264	
		HM6464	
	IDT	IDT7188	
		IDT7M864	
	Mitsubishi	M5M5165	
	Motorola	MCM6164	
	NEC	μPD4364	
		μPD4464	
	OKI	MSM5164	
		MSM5165	
	RCA	CDM6264	
	S-MOS	SRM2064	
		SRM2264	4177,4178
	Toshiba	TC5564	
LH5164	Toshiba	TC5565	
		TMM2063	
		TMM2064	
	Samsung	KM6264	
SM4A	**Samsung**	**KS52000**	4746
Z8601	SGS	Z8601	
	Zilog	Z8601	
Z8611	SGS	Z8611	
	Zilog	Z8611	
Z8681	SGS	Z8681	
	Zilog	Z8681	

Siemens

Manufacturer Device	Replacement Source	Device	IC Master Page
80186	AMD	80186	
	Fujitsu	80186	
	Intel	80186	
	IMI	IMI6080	
80188	AMD	80188	
	Fujitsu	80188	
	Intel	80188	
GXB10415	AMD	AM10415	
	Fairchild	**F10415**	4014
	Fujitsu	MBM100470A	
		MBM10415	
	Hitachi	HM2110	
		HM2112	
	Motorola	**MCM10146**	4123
	National	DM10415	
	Signetics	10415	
S576A	**LSIComp**	**LS7231**	1099
S576B	**LSIComp**	**LS7232**	1099
S576C	**LSIComp**	**LS7233**	1099
S576D	**LSIComp**	**LS7234**	1099
SA88332	AMD	AM9232	
	CSG	MPS2332	
	Fairchild	F3532	
	GI	R03-9332	
	GouldAMI	S2333	
		S68A332	
	GTEMicro	G2332	
	Hitachi	HN46332	
	Intech	IM7332	
	Intel	2332	
	Mitsubishi	M58333	
	Motorola	**MCM68A332**	4120
	National	NM52132	
	NCR	NCR2332	
	NEC	UPD2332A	
	Panasonic	MN2332	
	RCA	**CDM5333**	1673,1677
	Rockwell	R2332	
	SGS	M2332	
	Sharp	LH2332	
	Siemens	SAB8332	
	Signetics	2332	
		2632A	
	SiliconG	SG3532	
	SSS	SCM23C32	
	SMC	ROM4732	
	Supertex	23SC32	
		CM3200	
	Synertek	SY2332	
	TI	TM2332	
		TMS2332	
		TMS4732	
	Toshiba	TMM2332	
		TMM333P	
	VTI	VT2332	
SAB1795	SMC	9795	
		FDC1795	
	Western	FD1795	
SAB1797	SMC	9797	
		FDC1797	
	Western	FD1797	
SAB8332	AMD	AM9232	
	CSG	MPS2332	
	Fairchild	F3532	
	GI	R03-9332	
	GouldAMI	S2333	
		S68A332	
	GTEMicro	G2332	
	Hitachi	HN46332	
	Intech	IM7332	
	Intel	2332	
	Mitsubishi	M58333	
	Motorola	**MCM68A332**	4120
	National	NM52132	
	NCR	NCR2332	
	NEC	UPD2332A	
	Panasonic	MN2332	

(Continued)

◆ Discontinued

Bold face device numbers indicate manufacturers data is provided in the IC Master on the pages noted.

ALTERNATE SOURCE DIRECTORY

Siemens (Cont'd)

Manufacturer Device	Replacement Source	Device	IC Master Page
SAB8332	**RCA**	**CDM5333**	**1673,1677**
	Rockwell	R2332	
	SGS	M2332	
	Sharp	LH2332	
	Siemens	SA88332	
	Signetics	2332	
		2632A	
	SiliconG	SG3532	
	SSS	SCM23C32	
	SMC	ROM4732	
	Supertex	23SC32	
		CM3200	
	Synertek	SY2332	
	TI	TM2332	
		TMS2332	
		TMS4732	
	Toshiba	TMM2332	
		TMM333P	
	VTI	VT2332	
◆SDA4040	Plessey	SP4040	
SDA4041	Plessey	SP4551	
TBA120	National	TBA120	
	Telefunken	TBA120	
TBA1440G	ThomsonCSF	TBA1440G	
TBA440	Plessey	TBA440	
TCA4500	Motorola	TCA4500	
	National	LM4500	
TDA1048	ThomsonCSF	TDA1048	
TDA2522	National	TDA2522	
	Plessey	TDA2522	
TDA2530	Hitachi	HN462532	
	National	MM2532	
		NMC2532	
		TDA2530	
		TDA2532	
	Plessey	TDA2530	
	SiliconG	SG2532	
TDA2560	National	TDA2560	
	Plessey	TDA2560	
μAA170	TI	μAA170	
μAA171	TI	μAA171	

Sierra Semiconductor

Manufacturer Device	Replacement Source	Device	IC Master Page
SC11000	Reticon	R5632	
	GouldAMI	**S35212**	**3582**
		S35212A	**3582**
	Mitel	S35212A	
	Sierra	SC11005	
SC11002	National	MM74HC942	
SC11003	National	MM74HC943	
SC11005	Reticon	R5632	
	GouldAMI	**S35212**	**3582**
		S35212A	**3582**
	Mitel	S35212A	
	Sierra	SC11000	
SC11202	SiliconSys	202	
SC11203	SiliconSys	203	
SC11204	SiliconSys	204	
SC11301	**Fairchild**	**μA3054**	**3575**
	Harris	**HC5554**	**3595**
	National	TP3054	
	Sprague	ULN-3054	
SC11302	**Fairchild**	**μA3057**	**3575**
	Harris	**HC5557**	**3595**
	National	TP3057	
SC11401	Telmos	1840	
SC22001	National	COP494	
		NMC9306	
	Xicor	**X2444**	**736,4278**
SC22011	GI	ER5911	
	Hyundai	HY93C46	
	National	COP495	
		NMC9346	
	NCR	59346	
		NCR59308	**4128**
	SGS	M9346	

Signetics

Manufacturer Device	Replacement Source	Device	IC Master Page
100101	Fairchild	F100101	
100102	Fairchild	F100102	
100107	Fairchild	F100107	
100112	Fairchild	F100112	
	Hitachi	HD100112	
100113	Fairchild	F100113	
100114	Fairchild	F100114	
100117	Fairchild	F100117	
100118	Fairchild	F100118	
100122	Fairchild	F100122	
100123	Fairchild	F100123	
	Hitachi	HD100123	
100126	Fairchild	F100126	
100131	Fairchild	F100131	
	Hitachi	HD100131	
100136	Fairchild	F100136	
	Hitachi	HD100136	
100141	Fairchild	F100141	
	Hitachi	HD100141	
100145	Fairchild	F100145	
	Hitachi	HD100145	
100149	Motorola	MCM100416	
100150	Fairchild	F100150	
	Hitachi	HD100150	
100151	Fairchild	F100151	
	Hitachi	HD100151	
100155	Fairchild	F100155	
100158	Fairchild	F100158	
100160	Fairchild	F100160	
100163	Fairchild	F100163	
100164	Fairchild	F100164	
	Hitachi	HD100164	
100165	Cypress	PAL20L8	
	Fairchild	F100165	
	Hitachi	HD100165	
	MMI	PAL20L8	
100166	Fairchild	F100166	
100170	Cypress	PAL20R6	
	Fairchild	F100170	
	Hitachi	HD100170	
	MMI	PAL20R6	
100171	Fairchild	F100171	
	Hitachi	HD100171	
100180	Cypress	CY7C510	
	Fairchild	F100180	
	Hitachi	HD100179	
		HD100180	
	TRW-LSI	TMC2010	
100181	Cypress	CY7C164	
	Fairchild	F100181	
	Hitachi	HD100181	
	IDT	IDT7188	
100415	AMD	AM100415	
	Fairchild	**F100415**	**4014**
100422	**Fairchild**	**F100422**	**4014**
	Fujitsu	MB8118	
		MBM100422	
		MBM100422A	
	Hitachi	HM100422	
		HM4816	
	Intel	2118	
	Mostek	MK4516	
	Motorola	MCM4517	
	National	DM100422	
		NMC5295	
	NEC	UPB100422	
	Signetics	GBX100422	
100470	AMD	AM100470	
	Fujitsu	MBM100470A	
	NEC	UPB100470	
	Signetics	GBX100470	
100474	AMD	AM100474	
	Fairchild	F100474	
	Fujitsu	MBM100474	
		MBM100474A	
	Hitachi	100474	
		HM100474	
	NEC	UPB100474	
10100	Fairchild	F10100	
	Motorola	**MC10100**	**1123**
10101	Fairchild	F10101	
	Hitachi	HD10101	
	Motorola	**MC10101**	**1123**
10102	Fairchild	F10102	
	Hitachi	HD10102	
	Motorola	**MC10102**	**1122**
10103	Fairchild	F10103	
	Motorola	**MC10103**	**1122**
10104	Fairchild	F10104	
	Hitachi	HD10104	
	Motorola	**MC10104**	**1122**
10105	Fairchild	F10105	
	Hitachi	HD10105	
	Motorola	**MC10105**	**1123**
10106	Fairchild	F10106	
	Hitachi	HD10106	
	Motorola	**MC10106**	**1123**
10107	Fairchild	F10107	
	Hitachi	HD10107	
	Motorola	**MC10107**	**1123**
10109	Fairchild	F10109	
	Hitachi	HD10109	
	Motorola	**MC10109**	**1123**
10110	Fairchild	F10110	
	Hitachi	HD10110	
	Motorola	**MC10110**	**1122**
10111	Fairchild	F10111	
	Hitachi	HD10111	
	Motorola	**MC10111**	**1123**
10113	Fairchild	F10113	
	Motorola	**MC10113**	**1123**
10114	Fairchild	F10114	
	Motorola	**MC10114**	**1131**
10115	Fairchild	F10115	
	Motorola	**MC10115**	**1131**
10116	Fairchild	F10116	
	Hitachi	HD10116	
	Motorola	**MC10116**	**1131**
	National	DM10116	
10117	Fairchild	F10117	
	Hitachi	HD10117	
	Motorola	**MC10117**	**1123**
10118	Fairchild	F10118	
	Hitachi	HD10118	
	Motorola	**MC10118**	**1123**
10119	Fairchild	F10119	
	Hitachi	HD10119	
	Motorola	**MC10119**	**1123**
10121	Fairchild	F10121	
	Hitachi	HD10121	
	Motorola	**MC10121**	**1123**
10123	Fairchild	F10123	
	Motorola	**MC10123**	**1125**
10124	Fairchild	F10124	
	Hitachi	HD10124	
	Motorola	**MC10124**	**1124**
10125	Fairchild	F10125	
	Hitachi	HD10125	
	Motorola	**MC10125**	**1124**
10128	**Motorola**	**MC10128**	**1125**
10129	**Motorola**	**MC10129**	**1131**
10130	Fairchild	F10130	
	Hitachi	HD10130	
	Motorola	**MC10130**	**1126**
10131	Fairchild	F10131	
	Hitachi	HD10131	
	Motorola	**MC10131**	**1126**
10132	Fairchild	F10132	
	Hitachi	HD10132	
	Motorola	**MC10132**	**1129**
10133	Fairchild	F10133	
	Hitachi	HD10133	
	Motorola	**MC10133**	**1126**
10134	Fairchild	F10134	
	Hitachi	HD10134	
	Motorola	**MC10134**	**1130**
10135	Fairchild	F10135	
	Motorola	**MC10135**	**1126**
10136	Fairchild	F10136	
	Hitachi	HD10136	
	Motorola	**MC10136**	**1127**
10137	Fairchild	F10137	
	Motorola	**MC10137**	**1127**
10138	**Motorola**	**MC10138**	**1127**
◆10139	**Motorola**	**MCM10139**	**4124**
10140	TI	SN10140	
10141	Fairchild	F10141	
	Motorola	**MC10141**	**1128**
10144	Fairchild	F10144	
	Motorola	**MCM10144**	**4123**
	TI	SN10144	
10145	Fairchild	F10145A	
	Motorola	**MCM10145**	**4123**
10148	Hitachi	HD10148	
	Motorola	**MCM10148**	**4123**
	TI	SN10148	
10149	**Motorola**	**MCM10149**	**4124**
10158	Fairchild	F10158	
	Motorola	**MC10158**	**1129**
10159	Fairchild	F10159	
	Motorola	**MC10159**	**1129**
10160	Fairchild	F10160	
	Hitachi	HD10160	
	Motorola	**MC10160**	**1132**
10161	Fairchild	F10161	
	Hitachi	HD10161	
	Motorola	**MC10161**	**1130**
10162	Fairchild	F10162	
	Hitachi	HD10162	
	Motorola	**MC10162**	**1130**
10164	Fairchild	F10164	
	Hitachi	HD10164	
	Motorola	**MC10164**	**1129**
	TI	SN10164	
10165	Fairchild	F10165	
	Hitachi	HD10165	
	Motorola	**MC10165**	**1131**
10170	**Motorola**	**MC10170**	**1132**
10171	Fairchild	F10171	
	Motorola	**MC10171**	**1130**
10172	Fairchild	F10172	
	Motorola	**MC10172**	**1130**
10173	Fairchild	F10173	
	Motorola	**MC10173**	**1129**
10174	Fairchild	F10174	
	Hitachi	HD10174	
	Motorola	**MC10174**	**1129**
	TI	SN10174	
10175	Fairchild	F10175	
	Hitachi	HD10175	
	Motorola	**MC10175**	**1126**
10176	Fairchild	F10176	
	Motorola	**MC10176**	**1126**
10178	Fairchild	F10178	
	Motorola	**MC10178**	**1127**
10179	Fairchild	F10179	
	Hitachi	HD10179	
	Motorola	**MC10179**	**1132**
10180	Fairchild	F10180	
	Hitachi	HD10180	
	Motorola	**MC10180**	**1132**
10181	Fairchild	F10181	
	Hitachi	HD10181	
	Motorola	**MC10181**	**1132**
10186	Fairchild	F10186	
	Motorola	**MC10186**	**1126**
10188	**Motorola**	**MC10188**	**1124**
10189	**Motorola**	**MC10189**	**1124**
10190	**Motorola**	**MC10190**	**1124**
10191	**Motorola**	**MC10191**	**1124**
10192	Fairchild	F10192	
	Motorola	MC10192	
10195	**Motorola**	**MC10195**	**1124**
10210	Fairchild	F10210	
	Motorola	**MC10210**	**1122**
10211	Fairchild	F10211	
	Motorola	**MC10211**	**1123**
10212	Fairchild	F10212	
	Motorola	**MC10212**	**1123**
10216	Fairchild	F10216	
	Motorola	**MC10216**	**1131**
10231	Fairchild	F10231	
	Motorola	**MC10231**	**1127**
10415	AMD	AM10415	
	Fairchild	**F10415**	**4014**
	Fujitsu	MBM100470A	
		MBM10415	
	Hitachi	HM2110	
		HM2112	
	Motorola	**MCM10146**	**4123**
	National	DM10415	
	Siemens	GXB10415	
10422	**Fairchild**	**F10422**	**4014**
	Fujitsu	MBM10422A	
	Motorola	**MCM10422**	**4123**
	National	DM10422	
	NEC	UPB10422	
10470	AMD	AM10470	
	Fujitsu	MBM10470A	
	Hitachi	HM10470	
		HM2142	
	Motorola	MCM10470	
	National	DM10470	
	NEC	UPB10470	
10474	AMD	AM10474	
	Fairchild	F10474	
	Fujitsu	MBM10474A	
	Hitachi	HM10474	
	Motorola	**MCM10474**	**4123**
	National	DM10474	
	NEC	UPB10474	
23128	AMD	AM92128	
	GI	R09128	
		SPR-128	
	GouldAMI	S23128	
		S3630A	
	GTEMicro	G53128	
	Hitachi	HN613128	
		HN613128P	
	Mitsubishi	M5M23128	
	Motorola	MCM63128	
	NCR	NCR23128	
	NEC	UPD23128	
		UPD23128A	

(Continued)

◆ Discontinued

The manufacturers report their devices can be used as direct replacements.
Performance details often differ, so compare the specifications considering your requirements.

Signetics (Cont'd)

Manufacturer Device	Replacement Source	Device	IC Master Page
23128	NEC	UPD23128E	
		UPD23C128	
		UPD23C128E	
	RCA	**CDM53128**	**1673,1677**
	Rockwell	R23128	
	SSS	SCM23C128	
	Supertex	CM1310	
	Synertek	SY23128	
	Toshiba	TMM23128	
	UMC	UM23128	
	VTI	23131	
		VT23128	
		VT23129	
		VT23129A	
		VT23130	
		VT23138	
23256	AMD	AM92256	
	Fujitsu	MB83256	
	GI	R09256	
	GouldAMI	S23256	
		S38256	
	GTEMicro	G53256	
	Hitachi	HN613256	
	Mitsubishi	M5M23256	
	Mostek	MK38000	
	Motorola	MCM63256	
		MCM65256	
	NCR	NCR23256	
		NCR23257	
	NEC	UPD23256	
		UPD23256A	
		UPD23C256E	
	OKI	**MSM38256**	**4733**
	Panasonic	MN23256	
		MN23257	
	RCA	CDM52356	
		CDM53256	**1673,1678**
	S-MOS	**SMM2326**	**4178**
		SMM6325	**4178**
		SMM6326	**4178**
	Signetics	23256A	
	SSS	SCM23C256	
	Supertex	CM2560	
	Toshiba	**TMM23256**	**4263**
	UMC	UM23256	
	VTI	23257	
		VT23256	
		VT23257	
23256A	AMD	AM92256	
	Fujitsu	MB83256	
	GI	R09256	
	GouldAMI	S23256	
		S38256	
	GTEMicro	G53256	
	Hitachi	HN613256	
	Mitsubishi	M5M23256	
	Mostek	MK38000	
	Motorola	MCM63256	
		MCM65256	
	NCR	NCR23256	
		NCR23257	
	NEC	UPD23256	
		UPD23256A	
		UPD23C256E	
	OKI	**MSM38256**	**4733**
	Panasonic	MN23256	
		MN23257	
	RCA	CDM52356	
		CDM53256	**1673,1678**
	S-MOS	**SMM2326**	**4178**
		SMM6325	**4178**
		SMM6326	**4178**
	Signetics	23256	
	SSS	SCM23C256	
	Supertex	CM2560	
	Toshiba	**TMM23256**	**4263**
	UMC	UM23256	
	VTI	23257	
		VT23256	
		VT23257	
2332	AMD	AM9232	
	CSG	MPS2332	
	Fairchild	F3532	
	GI	R03-9332	
	GouldAMI	S2333	
		S68A332	
	GTEMicro	G2332	
		(Continued)	
2332	Hitachi	HN46332	
	Intech	IM7332	
	Intel	2332	
	Mitsubishi	M58333	
	Motorola	**MCM68A332**	**4120**
	National	NM52132	
	NCR	NCR2332	
	NEC	UPD2332A	
	Panasonic	MN2332	
	RCA	**CDM5333**	**1673,1677**
	Rockwell	R2332	
	SGS	M2332	
	Sharp	LH2332	
	Siemens	SA88332	
		SAB8332	
	Signetics	2632A	
	SiliconG	SG3532	
	SSS	SCM23C32	
	SMC	ROM4732	
	Supertex	23SC32	
		CM3200	
	Synertek	SY2332	
	TI	TM2332	
		TMS2332	
		TMS4732	
	Toshiba	TMM2332	
		TMM333P	
	VTI	VT2332	
2364	AMD	AM9264	
	GouldAMI	S2364	
		S68A364	
	Hitachi	HN48364	
	Motorola	**MCM68364**	**4120**
	NCR	NCR2364	
	OKI	**MSM3864**	**4733**
	Plessey	SL2364C	
	S-MOS	**SMM2364**	**4178**
	Sharp	LH2364A	
	Synertek	SYM2364	
	TI	TMS2364	
		TMS4764	
	Toshiba	TMM2364	
	VTI	VT2364	
	Weitek	SC8164	
2632A	AMD	AM9232	
	CSG	MPS2332	
	Fairchild	F3532	
	GI	R03-9332	
	GouldAMI	S2333	
		S68A332	
	GTEMicro	G2332	
	Hitachi	HN46332	
	Intech	IM7332	
	Intel	2332	
	Mitsubishi	M58333	
	Motorola	**MCM68A332**	**4120**
	National	NM52132	
	NCR	NCR2332	
	NEC	UPD2332A	
	Panasonic	MN2332	
	RCA	**CDM5333**	**1673,1677**
	Rockwell	R2332	
	SGS	M2332	
	Sharp	LH2332	
	Siemens	SA88332	
		SAB8332	
	Signetics	2332	
	SiliconG	SG3532	
	SSS	SCM23C32	
	SMC	ROM4732	
	Supertex	23SC32	
		CM3200	
	Synertek	SY2332	
	TI	TM2332	
		TMS2332	
		TMS4732	
	Toshiba	TMM2332	
		TMM333P	
	VTI	VT2332	
2664	AMD	9264	
	GI	R03-9364	
	GouldAMI	S68A364	
	Hitachi	HN48364	
	Intech	IM7364	
	MicroPwr	MP2364C	
	Mitsubishi	M58334	
	Mostek	MK36000	
	Motorola	**MCM68364**	**4120**
		MCM68365	**4120**
		MCM68366	**4120**
		(Continued)	
2664	National	MM52164	
	NEC	UPD2364	
	Rockwell	R2364A	
	SGS	M2362	
		M36000	
	Signetics	26S64	
	SSS	SCM23C64	
	SMC	ROM36000	
	Synertek	SY2364/A	
	TI	TMS4764	
	Toshiba	TMM2366	
26S64	AMD	9264	
	GI	R03-9364	
	GouldAMI	S68A364	
	Hitachi	HN48364	
	Intech	IM7364	
	MicroPwr	MP2364C	
	Mitsubishi	M58334	
	Mostek	MK36000	
	Motorola	**MCM68364**	**4120**
		MCM68365	**4120**
		MCM68366	**4120**
	National	MM52164	
	NEC	UPD2364	
	Rockwell	R2364A	
	SGS	M2362	
		M36000	
	Signetics	2664	
	SSS	SCM23C64	
	SMC	ROM36000	
	Synertek	SY2364/A	
	TI	TMS4764	
	Toshiba	TMM2366	
27C64	AMD	AM2764	
	Fujitsu	MBM2764	
		MBM27C64	
	Hitachi	HM482764	
		HN2764	
		HN27C64	
		HN482764	
	Intel	2764	
		2764A	
		27C64	**4078**
		87C64	**4078**
	Mitsubishi	M5L2764	
	NEC	UPD2764	
		UPD27C64	
	OKI	MSM2764	
		MSM2764A	**4732**
		MSM27C64	
	Rockwell	R2764	
		R27C64	
		R87C64	
	S-MOS	SPM27C64	
	SEEQ	2764	
		5133	
	SGS	M2764	
	SSS	SCM27C64	
	TI	TMS27C64	
	ThomsonCSF	ET2764	
	Toshiba	**TMM2764**	**4263**
2960	AMD	AM2960	
5400	**Fairchild**	**5400**	**609,616,622,623**
	National	DM5400	
	TI	**SN5400**	**712**
◆5401	National	DM5401	
	TI	**SN5401**	**712**
◆5402	**Fairchild**	**5402**	**609,616,622,623**
	National	DM5402	
	TI	**SN5402**	**712**
◆5403	National	DM5403	
	TI	**SN5403**	**712**
◆5404	**Fairchild**	**5404**	**609,616,622,623**
		9016	
	National	DM5404	
		DM9016C	
	TI	**SN5404**	**712**
◆5405	National	DM5405	
	TI	**SN5405**	**712**
◆5406	National	DM5406	
	TI	**SN5406**	**712**
◆5407	National	DM5407	
	TI	**SN5407**	**712**
◆5408	**Fairchild**	**5408**	**609,616,622,623**
	National	DM5408	
	TI	**SN5408**	**712**
◆5409	**Fairchild**	**5409**	**609,616,622,623**
	National	DM5409	
	TI	**SN5409**	**712**
◆5410	**Fairchild**	**5410**	**609,616,622,623**
	National	DM5410	
	TI	**SN5410**	**712**
◆54100	**TI**	**SN54100**	**712**
◆54107	National	DM54107	
	TI	**SN54107**	**712**
54109	National	DM54109	
	TI	**SN54109**	**712**
54116	**TI**	**SN54116**	**712**
◆5412	**TI**	**SN5412**	**712**
54121	**Fairchild**	**54121**	**609,616,622,623**
	National	DM54121	
	TI	**SN54121**	**712**
54123	**Fairchild**	**54123**	**609,616,622,623**
	National	DM54123	
	TI	**SN54123**	**712**
◆54125	**Fairchild**	**54125**	**616**
	National	DM54125	
		DM7093	
	TI	**SN54125**	**712**
54126	National	DM54126	
		DM7094	
	TI	**SN54126**	**712**
◆54128	**TI**	**SN54128**	**712**
◆5413	National	DM5413	
	TI	**SN5413**	**712**
54132	National	DM54132	
	TI	**SN54132**	**712**
5414	**Fairchild**	**5414**	**616**
	National	DM5414	
	TI	**SN5414**	**712**
54141	National	DM54141	
◆54145	National	DM54145	
54147	National	DM54147	
	TI	**SN54147**	**712**
54148	National	DM54148	
		DM9318	
	TI	**SN54148**	**712**
◆54150	**Fairchild**	**54150**	**616**
	National	DM54150	
	TI	**SN54150**	**712**
54151	Fairchild	54151A	
	National	DM54151	
	TI	**SN54151A**	**712**
54153	**Fairchild**	**54153**	**609,616,622,623**
	National	DM54153	
	TI	**SN54153**	**712**
◆54155	National	DM54155	
	TI	**SN54155**	**712**
◆54156	National	DM54156	
	TI	**SN54156**	**712**
54157	**Fairchild**	**54157**	**609,616**
	National	DM54157	
	TI	**SN54157**	**712**
◆5416	National	DM5416	
	TI	**SN5416**	**712**
54160	National	DM54160	
	Raytheon	RM9310	
	TI	**SN54160**	**712**
54161	**Fairchild**	**54161**	**616**
	National	DM54161	
	TI	**SN54161**	**712**
◆54162	National	DM54162	
	TI	**SN54162**	**712**
54163	National	DM54163	
	TI	**SN54163**	**712**
54164	**Fairchild**	**54164**	**616**
	National	DM54164	
		DM7570	
	TI	**SN54164**	**712**
54165	**Fairchild**	**54165**	**617**
	National	DM54165	
		DM7590	
	TI	**SN54165**	**712**
54166	National	DM54166	
	TI	**SN54166**	**712**
◆5417	National	DM5417	
	TI	**SN5417**	**712**
◆54170	**Fairchild**	**54170**	**617**
	National	DM54170	
	TI	**SN54170**	**712**

◆ Discontinued

Bold face device numbers indicate manufacturers data is provided in the IC Master on the pages noted.

Signetics (Cont'd)

Manufacturer Device	Replacement Source	Device	IC Master Page
54174	**Fairchild**	**54174**	**609,617,622,623**
	National	DM54174	
	TI	**SN54174**	**712**
54175	**Fairchild**	**54175**	**609,617,622,623**
	National	DM54175	
	TI	**SN54175**	**712**
54176	National	DM54176	
	Raytheon	RM8280	
	Signetics	S8280	
	TI	**SN54176**	**712**
54177	National	DM54177	
		DM7281	
	Raytheon	RM8281	
	Signetics	S7281	
		S8281	
	TI	**SN54177**	**712**
54180	National	DM54180	
	TI	**SN54180**	**712**
54181	National	DM54181	
	Raytheon	RM9341	
	TI	**SN54181**	**712**
◆54182	National	DM54182	
	Raytheon	RM9342	
	TI	**SN54182**	**712**
54190	National	DM54190	
	TI	**SN54190**	**712**
54191	**Fairchild**	**54191**	**617**
	National	DM54191	
	TI	**SN54191**	**712**
◆54192	National	DM54192	
		DM7560	
	TI	**SN54192**	**712**
◆54193	National	DM54193	
		DM7563	
	TI	**SN54193**	**712**
54194	National	DM54194	
◆54195	Fairchild	9300	
	National	DM54195	
	TI	**SN54195**	**712**
54196	National	DM54196	
	TI	**SN54196**	**712**
◆54198	National	DM54198	
	TI	**SN54198**	**712**
◆54199	National	DM54199	
	TI	**SN54199**	**712**
5420	**Fairchild**	**5420**	**609,616,622,623**
	National	DM5420	
	TI	**SN5420**	**712**
5426	National	DM5426	
	TI	**SN5426**	**712**
54279	**Fairchild**	**54279**	**617**
	TI	**SN54279**	**712**
◆54298	**Fairchild**	**54298**	**617**
	TI	**SN54298**	**712**
◆5430	**Fairchild**	**5430**	**609,616,622,623**
	National	DM5430	
	TI	**SN5430**	**712**
5432	**Fairchild**	**5432**	**616**
	National	DM5432	
	TI	**SN5432**	**712**
◆5437	**Fairchild**	**5437**	**609,616,622,623**
	National	DM5437	
	TI	**SN5437**	**712**
◆5438	National	DM5438	
	TI	**SN5438**	**712**
◆5440	**Fairchild**	**5440**	**609,616,622,623**
	National	DM5440	
	TI	**SN5440**	**712**
5442	Fairchild	5442A	
	National	DM5442	
	TI	**SN5442A**	**712**
◆5445	National	DM5445	
	TI	**SN5445**	**712**
◆5450	National	DM5450	
	TI	**SN5450**	**712**
◆5451	**Fairchild**	**5451**	**616**
	National	DM5451	
	TI	**SN5451**	**712**
◆5453	National	DM5453	
	TI	**SN5453**	**712**
◆5454	National	DM5454	
	TI	**SN5454**	**712**
◆5470	National	DM5470	
	TI	**SN5470**	**712**
◆5472	National	DM5472	
	TI	**SN5472**	**712**
5473	**Fairchild**	**5473**	**616**
	National	DM5473	
	TI	**SN5473**	**712**
5474	**Fairchild**	**5474**	**609,616,622,623**
	National	DM5474	
	TI	**SN5474**	**712**
5475	**Fairchild**	**5475**	**616**
	National	DM5475	
	TI	**SN5475**	**712**
5476	**Fairchild**	**5476**	**616**
	National	DM5476	
	TI	**SN5476**	**712**
5483A	Fairchild	5483A	
	TI	**SN5483A**	**712**
5485	**Fairchild**	**5485**	**616**
	National	DM5485	
	TI	**SN5485**	**712**
5486	**Fairchild**	**5486**	**609,616,622,623**
	National	DM5486	
	TI	**SN5486**	**712**
◆5494	**TI**	**SN5494**	**712**
5496	National	DM5496	
	TI	**SN5496**	**712**
54F00	**Fairchild**	**54F00**	**607,610,620,623**
	Motorola	**MC54F00**	**1122**
54F02	**Fairchild**	**54F02**	**607,610,620,623**
	Motorola	**MC54F02**	**1122**
54F04	**Fairchild**	**54F04**	**607,610,620,623**
	Motorola	**MC54F04**	**1124**
54F08	**Fairchild**	**54F08**	**607,610,620,623**
	Motorola	**MC54F08**	**1122**
54F10	**Fairchild**	**54F10**	**607,610,620,623**
	Motorola	**MC54F10**	**1122**
54F109	**Fairchild**	**54F109**	**607,610,620,623**
	Motorola	**MC54F109**	**1126**
54F11	**Fairchild**	**54F11**	**607,610,620,623**
	Motorola	**MC54F11**	**1122**
54F138	**Fairchild**	**54F138**	**607,610,620,623**
	Motorola	**MC54F138**	**1130**
54F139	**Fairchild**	**54F139**	**607,610,620,623**
	Motorola	**MC54F139**	**1130**
54F20	**Fairchild**	**54F20**	**607,610,620,623**
	Motorola	**MC54F20**	**1122**
54F240	**Fairchild**	**54F240**	**607,610,620,623**
	Motorola	**MC54F240**	**1124**
54F241	**Fairchild**	**54F241**	**607,610,620,623**
	Motorola	**MC54F241**	**1124**
54F242	**Motorola**	**MC54F242**	**1124**
54F243	**Fairchild**	**54F243**	**610,1024**
	Motorola	**MC54F243**	**1124**
54F244	**Fairchild**	**54F244**	**607,610,620,623**
	Motorola	**MC54F244**	**1124**
54F32	**Fairchild**	**54F32**	**607,610,620,623**
	Motorola	**MC54F32**	**1122**
54F333	Motorola	MC54F333	
54F373	**Fairchild**	**54F373**	**607,611,620,623**
	Motorola	**MC54F373**	**1126**
54F374	**Fairchild**	**54F374**	**607,611,620,623**
	Motorola	**MC54F374**	**1126**
54F534	**Fairchild**	**54F534**	**611,1022**
	Motorola	**MC54F534**	**1127**
54F74	**Fairchild**	**54F74**	**607,610,620,623**
	Motorola	**MC54F74**	**1126**
◆54H00	National	DM54H00	
◆54H01	National	DM54H01	
◆54H04	National	DM54H04	
◆54H05	National	DM54H05	
◆54H08	Fairchild	54H08	
	National	DM54H08	
◆54H10	National	DM54H10	
◆54H103	National	DM54H103	
◆54H106	National	DM54H106	
◆54H108	National	DM54H108	
◆54H11	National	DM54H11	
◆54H20	National	DM54H20	
◆54H21	National	DM54H21	
◆54H22	National	DM54H22	
◆54H30	National	DM54H30	
◆54H40	National	DM54H40	
◆54H50	National	DM54H50	
◆54H51	National	DM54H51	
◆54H52	National	DM54H52	
◆54H53	National	DM54H53	
◆54H54	National	DM54H54	
◆54H55	National	DM54H55	
◆54H60	National	DM54H60	
◆54H61	National	DM54H61	
◆54H62	National	DM54H62	
◆54H71	National	DM54H71	
◆54H72	National	DM54H72	
◆54H73	National	DM54H72	
◆54H74	National	DM54H74	
◆54H76	National	DM54H76	
54HC00	**Motorola**	**MC54HC00**	**1122**
	National	MM54HC00	
	RCA	**CD54HC00**	**1149**
	SSS	SS54HC00	
54HC02	**Motorola**	**MC54HC02**	**1122**
	National	MM54HC02	
	RCA	**CD54HC02**	**1149**
54HC04	**Motorola**	**MC54HC04**	**1124**
	National	MM54HC04	
	RCA	**CD54HC04**	**1149**
54HC08	**Motorola**	**MC54HC08**	**1122**
	National	MM54HC08	
	RCA	**CD54HC08**	**1149**
	TI	**SN54HC08**	**714**
54HC10	**Motorola**	**MC54HC10**	**1122**
	National	MM54HC10	
	RCA	**CD54HC10**	**1149**
	TI	**SN54HC10**	**714**
54HC107	**Motorola**	**MC54HC107**	**1126**
	National	MM54HC107	
	RCA	**CD54HC107**	**1149**
	TI	**SN54HC107**	**714**
54HC109	**Motorola**	**MC54HC109**	**1126**
	National	MM54HC109	
	RCA	**CD54HC109**	**1149**
	TI	**SN54HC109**	**714**
54HC11	**Motorola**	**MC54HC11**	**1122**
	National	MM54HC11	
	RCA	**CD54HC11**	**1149**
	TI	**SN54HC11**	**714**
54HC112	**Motorola**	**MC54HC112**	**1126**
	National	MM54HC112	
	RCA	**CD54HC112**	**1149**
	TI	**SN54HC112**	**714**
54HC123	Motorola	MC54HC123	
	National	MM54HC123	
	RCA	**CD54HC123**	**1150**
54HC132	**Motorola**	**MC54HC132**	**1125**
	National	MM54HC132	
	RCA	**CD54HC132**	**1149**
54HC133	**Motorola**	**MC54HC133**	**1122**
	National	MM54HC133	
	RCA	**CD74HC123**	**1150**
	TI	**SN54HC133**	**714**
54HC138	**Motorola**	**MC54HC138**	**1130**
	National	MM54HC138	
	RCA	**CD54HC138**	**1150**
	SSS	SS54HC138	
	TI	**SN54HC138**	**714**
54HC139	**Motorola**	**MC54HC139**	**1130**
	National	MM54HC139	
	RCA	**CD54HC139**	**1150**
	SSS	SS54HC139	
	TI	**SN54HC139**	**714**
54HC14	**Motorola**	**MC54HC14**	**1125**
	National	MM54HC14	
	RCA	**CD54HC14**	**1149**
	TI	**SN54HC14**	**714**
54HC147	**Motorola**	**MC54HC147**	**1131**
	National	MM54HC147	
	RCA	**CD54HC147**	**1150**
54HC151	**Motorola**	**MC54HC151**	**1129**
	National	MM54HC151	
	RCA	**CD54HC151**	**1150**
	TI	**SN54HC151**	**714**
54HC153	**Motorola**	**MC54HC153**	**1129**
	National	MM54HC153	
	RCA	**CD54HC153**	**1150**
	TI	**SN54HC153**	**714**
54HC154	**Motorola**	**MC54HC154**	**1130**
	National	MM54HC154	
	RCA	**CD54HC154**	**1150**
54HC157	**Motorola**	**MC54HC157**	**1129**
	RCA	**CD54HC157**	**1150**
	TI	**SN54HC157**	**714**
54HC158	**Motorola**	**MC54HC158**	**1129**
	National	MM54HC158	
	RCA	**CD54HC158**	**1150**
	TI	**SN54HC158**	**714**
54HC160	**Motorola**	**MC54HC160**	**1127**
	National	MM54HC160	
	RCA	**CD54HC160**	**1150**
	TI	**SN54HC160**	**714**
	Universal	US74HC160	
54HC161	**Motorola**	**MC54HC161**	**1127**
	National	MM54HC161	
	RCA	**CD54HC161**	**1150**
	TI	**SN54HC161**	**714**
54HC162	**Motorola**	**MC54HC162**	**1127**
	National	MM54HC162	
	RCA	**CD54HC162**	**1150**
	TI	**SN54HC162**	**714**
54HC163	**Motorola**	**MC54HC163**	**1127**
	National	MM54HC163	
	RCA	**CD54HC163**	**1150**
	TI	**SN54HC163**	**714**
54HC164	**Motorola**	**MC54HC164**	**1128**
	National	MM54HC164	
	RCA	**CD54HC164**	**1149**
	TI	**SN54HC164**	**714**
54HC165	**Motorola**	**MC54HC165**	**1128**
	National	MM54HC165	
	RCA	**CD54HC165**	**1149**
	TI	**SN54HC165**	**714**
54HC166	Motorola	MC54HC166	
	RCA	**CD54HC166**	**1149**
	TI	**SN54HC166**	**714**
54HC173	**Motorola**	**MC54HC173**	**1126**
	National	MM54HC173	
	RCA	**CD54HC173**	**1149**
	TI	**SN54HC173**	**714**
54HC174	**Motorola**	**MC54HC174**	**1126**
	National	MM54HC174	
	RCA	**CD54HC174**	**1149**
	TI	**SN54HC174**	**714**
54HC175	**Motorola**	**MC54HC175**	**1126**
	National	MM54HC175	
	RCA	**CD54HC175**	**1149**
	TI	**SN54HC175**	**714**
54HC191	**RCA**	**CD54HC191**	**1150**
	TI	**SN54HC191**	**714**
54HC192	**Motorola**	**MC54HC192**	**1127**
	National	MM54HC192	
	RCA	**CD54HC192**	**1150**
	TI	**SN54HC192**	**714**
54HC193	**Motorola**	**MC54HC193**	**1127**
	National	MM54HC193	
	RCA	**CD54HC193**	**1150**
	TI	**SN54HC193**	**714**
54HC194	**Motorola**	**MC54HC194**	**1128**
	National	MM54HC194	
	RCA	**CD54HC194**	**1149**
	TI	**SN54HC194**	**714**
54HC195	**Motorola**	**MC54HC195**	**1128**
	National	MM54HC195	
	NEC	UPD23C1000	
	RCA	**CD54HC195**	**1149**
	TI	**SN54HC195**	**714**
	VTI	**VT231024**	**4265**
54HC20	**Motorola**	**MC54HC20**	**1122**
	National	MM54HC20	
	RCA	**CD54HC20**	**1149**
	TI	**SN54HC20**	**714**
54HC221	Motorola	MC54HC221	
	National	MM54HC221	
	RCA	**CD54HC221**	**1150**
54HC238	**RCA**	**CD54HC238**	**1150**
	SSS	SS54HC238	
	TI	**SN54HC238**	**714**
54HC240	Mitel	MD54HC240	
	Motorola	**MC54HC240**	**1124**
	National	MM54HC240	
	RCA	**CD54HC240**	**1149**
	SSS	SS54HC240	
	Supertex	SI54HC240	
	TI	**SN54HC240**	**714**
54HC241	Mitel	MD54HC241	
	Motorola	**MC54HC241**	**1124**
	National	MM54HC241	
	RCA	**CD54HC241**	**1149**
	SSS	SS54HC241	

(Continued)

◆ Discontinued

The manufacturers report their devices can be used as direct replacements.
Performance details often differ, so compare the specifications considering your requirements.

Signetics (Cont'd)

Manufacturer Device	Replacement Source	Device	IC Master Page
54HC241	Supertex	SI54HC241	
	TI	**SN54HC241**	**714**
54HC242	**Motorola**	**MC54HC242**	**1124**
	National	MM54HC242	
	RCA	**CD54HC242**	**1149**
	TI	**SN54HC242**	**714**
54HC243	**Motorola**	**MC54HC243**	**1124**
	National	MM54HC243	
	RCA	**CD54HC243**	**1149**
	TI	**SN54HC243**	**714**
54HC244	Mitel	MD54HC244	
	Motorola	**MC54HC244**	**1124**
	National	MM54HC244	
	RCA	**CD54HC244**	**1149**
	SSS	SS54HC244	
	Supertex	SI54HC244	
	Telmos	TMD54HC244	
	TI	**SN54HC244**	**714**
54HC245	**Motorola**	**MC54HC245**	**1124**
	National	MM54HC245	
	RCA	**CD54HC245**	**1149**
	SSS	SS54HC245	
	TI	**SN54HC245**	**714**
54HC251	**Motorola**	**MC54HC251**	**1129**
	National	MM54HC251	
	RCA	**CD54HC251**	**1150**
	TI	**SN54HC251**	**714**
54HC253	**Motorola**	**MC54HC253**	**1129**
	National	MM54HC253	
	RCA	**CD54HC253**	**1150**
	TI	**SN54HC253**	**714**
54HC257	**Motorola**	**MC54HC257**	**1129**
	National	MM54HC257	
	RCA	**CD54HC257**	**1150**
	TI	**SN54HC257**	**714**
54HC259	**Motorola**	**MC54HC259**	**1126**
	National	MM54HC259	
	RCA	**CD54HC259**	**1150**
	TI	**SN54HC259**	**714**
54HC266	**Motorola**	**MC54HC266**	**1123**
	National	MM54HC266	
	RCA	CD54HC266	
	TI	**SN54HC266**	**714**
54HC27	**Motorola**	**MC54HC27**	**1122**
	National	MM54HC27	
	RCA	**CD54HC27**	**1149**
	TI	**SN54HC27**	**714**
54HC273	CTI	54HC273	
	Motorola	**MC54HC273**	**1126**
	RCA	**CD54HC273**	**1149**
	TI	**SN54HC273**	**714**
54HC280	**Motorola**	**MC54HC280**	**1132**
	National	MM54HC280	
	RCA	**CD54HC280**	**1150**
	TI	**SN54HC280**	**714**
54HC297	**RCA**	**CD54HC297**	**1150**
54HC299	**Motorola**	**MC54HC299**	**1129**
	National	MM54HC299	
	RCA	**CD54HC299**	**1149**
54HC30	**Motorola**	**MC54HC30**	**1122**
	National	MM54HC30	
	RCA	**CD54HC30**	**1149**
	TI	**SN54HC30**	**714**
54HC32	**Motorola**	**MC54HC32**	**1122**
	National	MM54HC32	
	RCA	**CD54HC32**	**1149**
	TI	**SN54HC32**	**714**
54HC354	**Motorola**	**MC54HC354**	**1130**
	National	MM54HC354	
	RCA	**CD54HC354**	**1150**
54HC356	**Motorola**	**MC54HC356**	**1130**
	National	MM54HC356	
	RCA	**CD54HC356**	**1150**
54HC365	**Motorola**	**MC54HC365**	**1124**
	National	MM54HC365	
	RCA	**CD54HC365**	**1149**
54HC366	**Motorola**	**MC54HC366**	**1124**
	National	MM54HC366	
	RCA	**CD54HC366**	**1149**
	TI	**SN54HC366**	**714**
54HC367	**Motorola**	**MC54HC367**	**1124**
	National	MM54HC367	
	RCA	**CD54HC367**	**1149**
	TI	**SN54HC367**	**714**
54HC368	**Motorola**	**MC54HC368**	**1124**
	National	MM54HC368	
	RCA	**CD54HC368**	**1149**
	TI	**SN54HC368**	**714**
54HC373	Mitel	MD54HC373	
	Motorola	**MC54HC373**	**1126**
54HC373	National	MM54HC373	
	RCA	**CD54HC373**	**1150**
	SSS	SS54HC373	
	Supertex	SI54HC373	
	TI	**SN54HC373**	**714**
54HC374	Mitel	MD54HC374	
	Motorola	**MC54HC374**	**1126**
	National	MM54HC374	
	RCA	**CD54HC374**	**1149**
	SSS	SS54HC374	
	Supertex	SI54HC374	
	TI	**SN54HC374**	**714**
54HC377	Motorola	MC54HC377	
	RCA	**CD54HC377**	**1149**
	TI	**SN54HC377**	**714**
54HC390	**Motorola**	**MC54HC390**	**1127**
	National	MM54HC390	
	RCA	**CD54HC390**	**1150**
	TI	**SN54HC390**	**714**
54HC393	**Motorola**	**MC54HC393**	**1127**
	National	MM54GC393	
	RCA	**CD54HC393**	**1150**
	TI	**SN54HC393**	**714**
54HC4002	**Motorola**	**MC54HC4002**	**1123**
	National	MM54HC4002	
	RCA	**CD54HC4002**	**1149**
	TI	**SN54HC4002**	**714**
54HC40104	**RCA**	**CD54HC40104**	**1149**
54HC40105	**RCA**	**CD54HC40105**	**1149**
54HC4017	**Motorola**	**MC54HC4017**	**1128**
	National	MM54HC4017	
	RCA	**CD54HC4017**	**1150**
54HC4020	**Motorola**	**MC54HC4020**	**1128**
	National	MM54HC4020	
	RCA	**CD54HC4020**	**1150**
	TI	**SN54HC4020**	**714**
54HC4024	Motorola	MC54HC4024	
	RCA	**CD54HC4024**	**1150**
	TI	**SN54HC4024**	**714**
54HC4040	**Motorola**	**MC54HC4040**	**1128**
	National	MM54HC4040	
	RCA	**CD54HC4040**	**1150**
	TI	**SN54HC4040**	**714**
54HC4049	**Motorola**	**MC54HC4049**	**1124**
	National	MM54HC4049	
	RCA	CD54HC4049	
54HC4050	**Motorola**	**MC54HC4050**	**1124**
	National	MM54HC4050	
	RCA	CD54HC4050	
54HC4051	**Motorola**	**MC54HC4051**	**1130**
	RCA	**CD54HC4051**	**1150**
54HC4052	**Motorola**	**MC54HC4052**	**1130**
	RCA	**CD54HC4052**	**1150**
54HC4053	**Motorola**	**MC54HC4053**	**1130**
	RCA	**CD54HC4053**	**1150**
54HC4060	**Motorola**	**MC54HC4060**	**1128**
	National	MM54HC4060	
	RCA	**CD54HC4060**	**1150**
	TI	**SN54HC4060**	**714**
54HC42	**Motorola**	**MC54HC42**	**1130**
	National	MM54HC42	
	RCA	**CD54HC42**	**1150**
	TI	**SN54HC42**	**714**
54HC4514	**Motorola**	**MC54HC4514**	**1130**
	National	MM54HC4514	
	RCA	**CD54HC4514**	**1150**
54HC4520	**RCA**	**CD54HC4520**	**1150**
54HC4538	**Motorola**	**MC54HC4538**	**1131**
	National	MM54HC4538	
	RCA	**CD54HC4538**	**1150**
54HC533	**Motorola**	**MC54HC533**	**1126**
	National	MM54HC533	
	RCA	**CD54HC533**	**1150**
	SSS	SS54HC533	
	TI	**SN54HC533**	**714**
54HC534	**Motorola**	**MC54HC534**	**1127**
	National	MM54HC534	
	RCA	**CD54HC534**	**1149**
	SSS	SS54HC534	
	TI	**SN54HC534**	**714**
54HC540	**RCA**	**CD54HC540**	**1149**
54HC541	**RCA**	**CD54HC541**	**1149**
	SSS	SS54HC541	
	TI	**SN54HC541**	**714**
54HC563	National	MM54HC563	
	RCA	**CD54HC563**	**1150**
	SSS	SS54HC563	
	TI	**SN54HC563**	**714**
54HC564	National	MM54HC564	
	RCA	**CD54HC564**	**1149**
	SSS	SS54HC564	
54HC573	**Motorola**	**MC54HC573**	**1126**
	National	MM54HC573	
	RCA	**CD54HC573**	**1150**
	SSS	SS54HC573	
54HC574	**Motorola**	**MC54HC574**	**1127**
	National	MM54HC574	
	RCA	**CD54HC574**	**1149**
	SSS	SS54HC574	
	TI	**SN54HC574**	**714**
54HC640	**Motorola**	**MC54HC640**	**1125**
	National	MM54HC640	
	RCA	**CD54HC640**	**1149**
	SSS	SS54HC640	
	TI	**SN54HC640**	**714**
54HC643	**Motorola**	**MC54HC643**	**1125**
	National	MM54HC643	
	RCA	**CD54HC643**	**1149**
	TI	**SN54HC643**	**714**
54HC645	National	MM54HC645	
	SSS	SS54HC645	
	TI	**SN54HC645**	**714**
54HC646	**Motorola**	**MC54HC646**	**1125**
	National	MM54HC646	
	RCA	**CD54HC646**	**1149**
	TI	**SN54HC646**	**714**
54HC648	**Motorola**	**MC54HC648**	**1125**
	National	MM54HC648	
	RCA	**CD54HC648**	**1149**
	TI	**SN54HC648**	**714**
54HC670	**RCA**	**CD54HC670**	**1149**
	TI	**SN54HC670**	**714**
54HC688	**Motorola**	**MC54HC688**	**1131**
	National	MM54HC688	
	RCA	**CD54HC688**	**1150**
54HC73	**Motorola**	**MC54HC73**	**1126**
	National	MM54HC73	
	Nitron	NC74HCT42	
	RCA	**CD54HC73**	**1149**
54HC74	**Motorola**	**MC54HC74**	**1126**
	National	MM54HC74	
	RCA	**CD54HC74**	**1149**
	TI	**SN54HC74**	**714**
54HC75	**Motorola**	**MC54HC75**	**1126**
	National	MM54HC75	
	RCA	**CD54HC75**	**1150**
	TI	**SN54HC75**	**714**
54HC76	**Motorola**	**MC54HC76**	**1126**
	National	MM54HC76	
54HC85	**Motorola**	**MC54HC85**	**1131**
	National	MM54HC85	
	RCA	**CD54HC85**	**1150**
54HC86	**Motorola**	**MC54HC86**	**1123**
	National	MM54HC86	
	RCA	**CD54HC86**	**1149**
	TI	**SN54HC86**	**714**
54HCT00	Motorola	MC54HCT00	
	RCA	**CD54HCT00**	**1149**
54HCT02	**RCA**	**CD54HCT02**	**1149**
54HCT04	Motorola	MC54HCT04	
	RCA	**CD54HCT04**	**1149**
54HCT08	**RCA**	**CD54HCT08**	**1149**
54HCT10	**RCA**	**CD54HCT10**	**1149**
54HCT107	**RCA**	**CD54HCT107**	**1149**
54HCT109	**RCA**	**CD54HCT109**	**1149**
54HCT11	**RCA**	**CD54HCT11**	**1149**
54HCT112	**RCA**	**CD54HCT112**	**1149**
54HCT123	**RCA**	**CD54HCT123**	**1150**
54HCT132	**RCA**	**CD54HCT132**	**1149**
54HCT138	CTI	54HCT138	
	IDT	IDT54HCT138	
	Mitel	MD54HCT138	
	Motorola	MC54HCT138	
	SPI	SP54HCT138	
	SSS	SS54HCT138	
	TI	**SN54HCT138**	**714**
54HCT139	CTI	54HCT139	
	IDT	IDT54HCT139	
	Mitel	MD54HCT139	
	RCA	**CD54HCT139**	**1150**
	SPI	SP54HCT139	
	SSS	SS54HCT139	
54HCT14	**RCA**	**CD54HCT14**	**1149**
54HCT147	**RCA**	**CD54HCT147**	**1150**
54HCT151	**RCA**	**CD54HCT151**	**1150**
54HCT153	**RCA**	**CD54HCT153**	**1150**
54HCT154	**RCA**	**CD54HCT154**	**1150**
54HCT157	Motorola	MC54HCT157	
	RCA	**CD54HCT157**	**1150**
54HCT158	Motorola	MC54HCT158	
	RCA	**CD54HCT158**	**1150**
54HCT160	**RCA**	**CD54HCT160**	**1150**
54HCT161	**RCA**	**CD54HCT161**	**1150**
54HCT162	**RCA**	**CD54HCT162**	**1150**
54HCT163	**RCA**	**CD54HCT163**	**1150**
54HCT164	**RCA**	**CD54HCT164**	**1149**
54HCT165	**RCA**	**CD54HCT165**	**1149**
54HCT166	**RCA**	**CD54HCT166**	**1149**
54HCT173	**RCA**	**CD54HCT173**	**1149**
54HCT174	**RCA**	**CD54HCT174**	**1149**
54HCT175	**RCA**	**CD54HCT175**	**1149**
54HCT191	**RCA**	**CD54HCT191**	**1150**
54HCT192	**RCA**	**CD54HCT192**	**1150**
54HCT193	**RCA**	**CD54HCT193**	**1150**
54HCT194	**RCA**	**CD54HCT194**	**1149**
54HCT195	**RCA**	**CD54HCT195**	**1149**
54HCT20	**RCA**	**CD54HCT20**	**1149**
54HCT221	**RCA**	**CD54HCT221**	**1150**
54HCT238	CTI	54HCT238	
	RCA	**CD54HCT238**	**1150**
	SSS	SS54HCT238	
	TI	**SN54HCT238**	**714**
54HCT240	**RCA**	**CD54HCT240**	**1149**
54HCT241	CTI	54HCT241	
	Mitel	MD54HCT241	
	Motorola	MC54HCT241	
	National	MM54HCT241	
	RCA	**CD54HCT241**	**1149**
	SPI	SP54HCT241	
	SSS	SS54HCT241	
	Supertex	SI54HCT241	
	TI	**SN54HCT241**	**714**
54HCT242	**RCA**	**CD54HCT242**	**1149**
54HCT243	RCA	CD54HCT243	
54HCT244	CTI	54HCT244	
	Mitel	MD54HCT244	
	Motorola	MC54HCT244	
	National	MM54HCT244	
	RCA	**CD54HCT244**	**1149**
	SPI	SP54HCT244	
	SSS	SS54HCT244	
	Supertex	SI54HCT244	
	TI	**SN54HCT244**	**714**
54HCT245	CTI	54HCT245	
	Mitel	MD54HCT245	
	Motorola	MC54HCT245	
	RCA	**CD54HCT245**	**1149**
	SPI	SP54HCT245	
	SSS	SS54HCT245	
	TI	**SN54HCT245**	**714**
54HCT251	**RCA**	**CD54HCT251**	**1150**
54HCT253	**RCA**	**CD54HCT253**	**1150**
54HCT257	Motorola	MC54HCT257	
	RCA	**CD54HCT257**	**1150**
54HCT259	**RCA**	**CD54HCT259**	**1150**
54HCT27	**RCA**	**CD54HCT27**	**1149**
54HCT273	**RCA**	**CD54HCT273**	**1149**
54HCT280	**RCA**	**CD54HCT280**	**1150**
54HCT297	**RCA**	**CD54HCT297**	**1150**
54HCT299	**RCA**	**CD54HCT299**	**1149**
54HCT30	**RCA**	**CD54HCT30**	**1149**
54HCT32	**RCA**	**CD54HCT32**	**1149**
54HCT354	**RCA**	**CD54HCT354**	**1150**
54HCT356	**RCA**	**CD54HCT356**	**1150**
54HCT365	**RCA**	**CD54HCT365**	**1149**
54HCT366	**RCA**	**CD54HCT366**	**1149**
54HCT367	**RCA**	**CD54HCT367**	**1149**
54HCT368	**RCA**	**CD54HCT368**	**1149**
54HCT373	CTI	54HCT373	
	Mitel	MD54HCT343	
		MD54HCT373	
	Motorola	MC54HCT373	
	National	MM54HCT373	
	RCA	**CD54HCT373**	**1150**
	SPI	SP54HCT373	
	SSS	SS54HCT373	
	Supertex	SI54HCT373	
	TI	**SN54HCT373**	**714**
54HCT374	**RCA**	**CD54HCT374**	**1149**
54HCT377	**RCA**	**CD54HCT377**	**1149**
54HCT390	**RCA**	**CD54HCT390**	**1150**
54HCT393	**RCA**	**CD54HCT393**	**1150**
54HCT4002	**RCA**	**CD54HCT4002**	**1149**
54HCT40104	**RCA**	**CD54HCT40104**	**1149**
54HCT40105	**RCA**	**CD54HCT40105**	**1149**
54HCT4017	**RCA**	**CD54HCT4017**	**1150**
54HCT4020	**RCA**	**CD54HCT4020**	**1150**
54HCT4024	**RCA**	**CD54HCT4024**	**1150**
54HCT4040	**RCA**	**CD54HCT4040**	**1150**
54HCT4049	RCA	CD54HCT4049	
54HCT4050	RCA	CD54HCT4050	
54HCT4051	**RCA**	**CD54HCT4051**	**1150**
54HCT4052	**RCA**	**CD54HCT4052**	**1150**

(Continued)

◆ Discontinued

Bold face device numbers indicate manufacturers data is provided in the IC Master on the pages noted.

Signetics (Cont'd)

Manufacturer Device	Replacement Source	Device	IC Master Page
54HCT4053	**RCA**	**CD54HCT4053**	**1150**
54HCT4060	**RCA**	**CD54HCT4060**	**1150**
54HCT42	**RCA**	**CD54HCT42**	**1150**
54HCT4511	**RCA**	**CD54HCT4511**	**1150**
54HCT4514	**RCA**	**CD54HCT4514**	**1150**
54HCT4520	**RCA**	**CD54HCT4520**	**1150**
54HCT4538	**RCA**	**CD54HCT4538**	**1150**
54HCT533	CTI	54HCT533	
	Motorola	MC54HCT533	
	RCA	**CD54HCT533**	**1150**
	SSS	SS54HCT533	
54HCT534	**RCA**	**CD54HCT534**	**1149**
54HCT540	CTI	54HCT540	
	Mitel	MD54HCT540	
	Motorola	MC54HCT540	
	RCA	**CD54HCT540**	**1149**
	SPI	SP54HCT540	
	SSS	SS54HCT540	
	TI	**SN54HCT540**	**714**
54HCT541	CTI	54HCT541	
	Mitel	MD54HCT541	
	Motorola	MC54HCT541	
	RCA	**CD54HCT541**	**1149**
	SPI	SP54HCT541	
	SSS	SS54HCT541	
	TI	**SN54HCT541**	**714**
54HCT563	CTI	54HCT563	
	RCA	**CD54HCT563**	**1150**
	SSS	SS54HCT563	
54HCT564	CTI	54HCT564	
	RCA	**CD54HCT564**	**1149**
	SSS	SS54HCT564	
	Zytrex	ZX74HCT564-2	
54HCT573	CTI	54HCT573	
	Mitel	MD54HCT573	
	RCA	**CD54HCT573**	**1150**
	SPI	SP54HCT573	
	SSS	SS54HCT573	
54HCT574	CTI	54HCT574	
	Mitel	MD54HCT574	
	RCA	**CD54HCT574**	**1149**
	SPI	SP54HCT574	
	SSS	SS54HCT574	
54HCT640	Motorola	MC54HCT640	
	RCA	**CD54HCT640**	**1149**
	SSS	SS54HCT640	
54HCT643	Motorola	MC54HCT643	
	RCA	**CD54HCT643**	**1149**
54HCT645	SSS	SS54HCT645	
54HCT646	**RCA**	**CD54HCT646**	**1149**
54HCT648	**RCA**	**CD54HCT648**	**1149**
54HCT670	**RCA**	**CD54HCT670**	**1149**
54HCT688	**RCA**	**CD54HCT688**	**1150**
54HCT73	**RCA**	**CD54HCT73**	**1149**
54HCT74	**RCA**	**CD54HCT74**	**1149**
54HCT75	**RCA**	**CD54HCT75**	**1150**
54HCT85	**RCA**	**CD54HCT85**	**1150**
54HCT86	**RCA**	**CD54HCT86**	**1149**
54HCU04	Motorola	MC54HCU04	
	RCA	CD54HCU04	
54LS00	**Fairchild**	**54LS00**	**607,612,621,623**
	Motorola	**SN54LS00**	**1122**
	National	DM54LS00	
	SGS	T54LS00	
	TI	**SN54LS00**	**715**
◆54LS01	**Motorola**	**SN54LS01**	**1122**
	National	DM54LS01	
	TI	**SN54LS01**	**715**
54LS02	**Fairchild**	**54LS02**	**607,612,621,623**
	Motorola	**SN54LS02**	**1122**
	National	DM54LS02	
	SGS	T54LS02	
	TI	**SN54LS02**	**715**
◆54LS03	**Fairchild**	**54LS03**	**607,612,621,623**
	Motorola	**SN54LS03**	**1122**
	National	DM54LS03	
	SGS	T54LS03	
	TI	**SN54LS03**	**715**
54LS04	**Fairchild**	**54LS04**	**607,612,621,623**
	Motorola	**SN54LS04**	**1124**
	National	DM54LS04	
	SGS	T54LS04	
	TI	**SN54LS04**	**715**
◆54LS05	**Fairchild**	**54LS05**	**607,612,621,623**
	Motorola	**SN54LS05**	**1124**
			(Continued)
◆54LS05	National	DM54LS05	
	SGS	T54LS05	
	TI	**SN54LS05**	**715**
54LS08	**Fairchild**	**54LS08**	**607,612,621,623**
	Motorola	**SN54LS08**	**1122**
	National	DM54LS08	
	SGS	T54LS08	
	TI	**SN54LS08**	**715**
◆54LS09	**Fairchild**	**54LS09**	**612**
	Motorola	**SN54LS09**	**1122**
	National	DM54LS09	
	SGS	T54LS09	
	TI	**SN54LS09**	**715**
54LS10	**Fairchild**	**54LS10**	**607,612,621,623**
	Motorola	**SN54LS10**	**1122**
	National	DM54LS10	
	SGS	T54LS10	
	TI	**SN54LS10**	**715**
◆54LS11	**Fairchild**	**54LS11**	**607,612,621,623**
	Motorola	**SN54LS11**	**1122**
	National	DM54LS11	
	SGS	T54LS11	
	TI	**SN54LS11**	**715**
◆54LS114	**Fairchild**	**54LS114**	**608,612,621,623**
	SGS	T54LS114	
◆54LS12	**Motorola**	**SN54LS12**	**1122**
	National	DM54LS12	
	TI	**SN54LS12**	**715**
54LS125A	**Fairchild**	**54LS125A**	**612**
	Motorola	SN54LS125 **SN54LS125A**	**1124**
	National	DM54LS125	
	SGS	T54LS125	
	TI	**SN54LS125A**	**715**
◆54LS13	**Fairchild**	**54LS13**	**612**
	Motorola	**SN54LS13**	**1125**
	National	DM54LS13	
	SGS	T54LS13	
	TI	**SN54LS13**	**715**
54LS132	**Motorola**	**SN54LS132**	**1125**
	National	DM54LS132	
	SGS	T54LS132	
	TI	**SN54LS132**	**715**
54LS136	**Fairchild**	**54LS136**	**612**
	Motorola	**SN54LS136**	**1123**
	National	DM54LS136	
	SGS	T54LS136	
	TI	**SN54LS136**	**715**
54LS138	**Fairchild**	**54LS138**	**608,612,621,623**
	Motorola	**SN54LS138**	**1130**
	National	DM54LS138	
	SGS	T54LS138	
	TI	**SN54LS138**	**715**
54LS139	**Fairchild**	**54LS139**	**608,613,621,623**
	Motorola	**SN54LS139**	**1130**
	National	DM54LS139	
	SGS	T54LS139	
	TI	**SN54LS139A**	**715**
54LS14	**Fairchild**	**54LS14**	**612**
	Motorola	**SN54LS14**	**1125**
	National	DM54LS14	
	SGS	T54LS14	
	TI	**SN54LS14**	**715**
◆54LS15	**Fairchild**	**54LS15**	**612**
	Motorola	**SN54LS15**	**1122**
	National	DM54LS15	
	SGS	T54LS15	
	TI	**SN54LS15**	**715**
54LS151	**Fairchild**	**54LS151**	**608,613,621,623**
	Motorola	**SN54LS151**	**1129**
	National	DM54LS151	
	SGS	T54LS151	
	TI	**SN54LS151**	**715**
54LS153	**Fairchild**	**54LS153**	**608,613,621,623**
	Motorola	**SN54LS153**	**1129**
	National	DM54LS153	
	SGS	T54LS153	
	TI	**SN54LS153**	**715**
54LS154	National	DM54LS154	
54LS157	**Fairchild**	**54LS157**	**608,613,621,623**
	Motorola	**SN54LS157**	**1129**
	National	DM54LS157	
	SGS	T54LS157	
	TI	**SN54LS157**	**715**
54LS158	**Fairchild**	**54LS158**	**608,613,621,623**
	Motorola	**SN54LS158**	**1129**
	National	DM54LS158	
	SGS	T54LS158	
	TI	**SN54LS158**	**715**
54LS160A	**Fairchild**	**54LS160A**	**613**
	Motorola	**SN54LS160A**	**1127**
	SGS	T54LS160	
	TI	**SN54LS160A**	**715**
54LS161A	Fairchild	54LS161A	
	Motorola	**SN54LS161A**	**1127**
	National	DM54LS161A	
	SGS	T54LS161	
	TI	**SN54LS161A**	**715**
54LS162A	**Fairchild**	**54LS162A**	**613**
	Motorola	**SN54LS162A**	**1127**
	National	DM54LS162A	
	SGS	T54LS162	
	TI	**SN54LS162A**	**715**
54LS163A	**Fairchild**	**54LS163A**	**613**
	Motorola	**SN54LS163A**	**1127**
	National	DM54LS163 DM54LS163A	
	SGS	T54LS163	
	TI	**SN54LS163A**	**715**
54LS164	**Fairchild**	**54LS164**	**613**
	Motorola	**SN54LS164**	**1128**
	National	DM54LS164	
	SGS	T54LS164	
	TI	**SN54LS164**	**715**
◆54LS170	**Fairchild**	**54LS170**	**613**
	National	DM54LS170	
	SGS	T54LS170	
	TI	SN54LS170	
54LS173	Fairchild	54LS173	
	Motorola	**SN54LS173A**	**1126**
	National	DM54LS173	
	TI	SN54LS173A	
54LS174	**Fairchild**	**54LS174**	**608,613,621,623**
	Motorola	**SN54LS174**	**1126**
	National	DM54LS174	
	SGS	T54LS174	
	TI	SN54LS174	
54LS175	**Fairchild**	**54LS175**	**608,613,621,623**
	Motorola	**SN54LS175**	**1126**
	National	DM54LS175	
	SGS	T54LS175	
	TI	SN54LS175	
54LS181	**Fairchild**	**54LS181**	**613**
	Motorola	**SN54LS181**	**1132**
	SGS	T54LS181	
	TI	SN54LS181	
54LS190	**Motorola**	**SN54LS190**	**1127**
	National	DM54LS190	
	SGS	T54LS190	
	TI	SN54LS190	
54LS191	**Motorola**	**SN54LS191**	**1127**
	National	DM54LS191	
	SGS	T54LS191	
	TI	SN54LS191	
54LS192	**Fairchild**	**54LS192**	**613**
	Motorola	**SN54LS192**	**1127**
	National	DM54LS192	
	Raytheon	54LS192	
	SGS	T54LS192	
	TI	SN54LS192	
54LS193	**Fairchild**	**54LS193**	**608,613,621,623**
	Motorola	**SN54LS193**	**1127**
	National	DM54LS193	
	SGS	T54LS193	
	TI	SN54LS193	
54LS194A	**Fairchild**	**54LS28**	**612**
	Motorola	**SN54LS28**	**1122**
	SGS	T54LS28	
	Signetics	54LS28	
	TI	**SN54LS28**	**715**
54LS195A	**Fairchild**	**54LS195A**	**613**
	Motorola	**SN54LS195A**	**1128**
	SGS	T54LS195	
	TI	SN54LS195A	
◆54LS196	**Motorola**	**SN54LS196**	**1127**
	National	DM54LS196	
	SGS	T54LS196	
	TI	SN54LS196	
54LS197	**Motorola**	**SN54LS197**	**1127**
	National	DM54LS197	
	SGS	T54LS197	
	TI	SN54LS197	
54LS20	**Fairchild**	**54LS20**	**608,612,621,623**
	Motorola	**SN54LS20**	**1122**
	National	DM54LS20	
	SGS	T54LS20	
	TI	**SN54LS20**	**715**
◆54LS21	**Fairchild**	**54LS21**	**608,612,621,623**
	Motorola	**SN54LS21**	**1122**
	National	DM54LS21	
	SGS	T54LS21	
	TI	**SN54LS21**	**715**
◆54LS22	**Fairchild**	**54LS22**	**608,612,621,623**
	Motorola	**SN54LS22**	**1122**
	National	DM54LS22	
	SGS	T54LS22	
	TI	**SN54LS22**	**715**
54LS221	**Motorola**	**SN54LS221**	**1131**
	National	DM54LS221	
	TI	SN54LS221	
54LS245	**Fairchild**	**54LS245**	**613**
	MMI	SN54LS245	
	Motorola	**SN54LS245**	**1124**
	National	DM54LS245	
	TI	SN54LS245	
54LS248	**Fairchild**	**54LS248**	**613**
	Motorola	**SN54LS248**	**1130**
	National	DM54LS248	
	TI	SN54LS248	
54LS251	**Fairchild**	**54LS251**	**613**
	Motorola	**SN54LS251**	**1129**
	SGS	T54LS251	
	TI	SN54LS251	
54LS253	**Fairchild**	**54LS253**	**608,613,621,623**
	Motorola	**SN54LS253**	**1129**
	National	DM54LS253 DM7214	
	SGS	T54LS253	
	TI	SN54LS253	
◆54LS26	**Fairchild**	**54LS26**	**612**
	Motorola	**SN54LS26**	**1122**
	National	DM54LS26	
	SGS	T54LS26	
	TI	**SN54LS26**	**715**
54LS260A	**Fairchild**	**54LS260**	**614**
	Motorola	SN54LS260A	
	SGS	T54LS260	
◆54LS261	**TI**	**SN54LS261**	**715**
54LS266	**Fairchild**	**54LS266**	**608,614,622,623**
	Motorola	**SN54LS266**	**1123**
	National	DM54LS266	
	SGS	T54LS266	
	TI	**SN54LS266**	**715**
◆54LS27	**Fairchild**	**54LS27**	**608,612,621,623**
	Motorola	**SN54LS27**	**1122**
	National	DM54LS27	
	SGS	T54LS27	
	TI	**SN54LS27**	**715**
54LS273	**Fairchild**	**54LS273**	**614**
	MMI	SN54LS273	
	Motorola	**SN54LS273**	**1126**
	SGS	T54LS273	
	TI	**SN54LS273**	**715**
54LS279	**Fairchild**	**54LS279**	**608,614,622,623**
	Motorola	**SN54LS279**	**1126**
	National	DM54LS279	
	SGS	T54LS279	
	TI	SN54LS279	
54LS28	**Fairchild**	**54LS28**	**612**
	Motorola	**SN54LS28**	**1122**
	SGS	T54LS28	
	Signetics	54LS194A	
	TI	**SN54LS28**	**715**
54LS283	**Fairchild**	**54LS283**	**608,614,622,623**
	Motorola	**SN54LS283**	**1132**
	National	DM54LS283	
	SGS	T54LS283	
	TI	**SN54LS283**	**715**
54LS290	**Motorola**	**SN54LS290**	**1127**
	National	DM54LS290	
	SGS	T54LS290	
	TI	**SN54LS290**	**715**
54LS293	**Motorola**	**SN54LS293**	**1127**
	National	DM54LS293	
	SGS	T54LS293	
	TI	**SN54LS293**	**715**

◆ Discontinued

The manufacturers report their devices can be used as direct replacements.
Performance details often differ, so compare the specifications considering your requirements.

Signetics (Cont'd)

Manufacturer Device	Replacement Source	Device	IC Master Page
54LS30	**Fairchild**	**54LS30**	608,612,621,623
	Motorola	**SN54LS30**	1122
	National	DM54LS30	
	SGS	T54LS30	
	TI	**SN54LS30**	715
54LS32	**Fairchild**	**54LS32**	608,612,621,623
	Motorola	**SN54LS32**	1122
	National	DM54LS32	
	SGS	T54LS32	
	TI	**SN54LS32**	715
◆54LS33	**Fairchild**	**54LS33**	612
	Motorola	**SN54LS33**	1122
	SGS	T54LS33	
	TI	**SN54LS33**	715
54LS365	Fairchild	54LS365A	
	Motorola	**SN54LS365A**	1124
	SGS	T54LS365	
	Signetics	54LS365A	
	TI	SN54LS365A	
54LS365A	Fairchild	54LS365A	
	Motorola	**SN54LS365A**	1124
	SGS	T54LS365	
	Signetics	54LS365	
	TI	SN54LS365A	
54LS366A	Fairchild	54LS366A	
	Motorola	SN54LS366A	
	National	DM54LS366	
	SGS	T54LS366	
	TI	SN54LS366A	
54LS367	Fairchild	54LS367A	
	Motorola	**SN54LS367A**	1124
	National	DM54LS367	
	SGS	T54LS367	
	Signetics	54LS367A	
	TI	SN54LS367A	
54LS367A	Fairchild	54LS367A	
	Motorola	**SN54LS367A**	1124
	National	DM54LS367	
	SGS	T54LS367	
	Signetics	54LS367	
	TI	SN54LS367A	
54LS368	Fairchild	54LS368A	
	Motorola	**SN54LS368A**	1124
	National	DM54LS368	
	SGS	T54LS368	
	Signetics	54LS368A	
	TI	SN54LS368A	
54LS368A	Fairchild	54LS368A	
	Motorola	**SN54LS368A**	1124
	National	DM54LS368	
	SGS	T54LS368	
	Signetics	54LS368	
	TI	SN54LS368A	
54LS37	**Fairchild**	**54LS37**	612
	Motorola	**SN54LS37**	1122
	National	DM54LS37	
	SGS	T54LS37	
	TI	**SN54LS37**	715
54LS373	MMI	SN54LS373	
	Motorola	**SN54LS373**	1126
	SGS	T54LS373	
	TI	**SN54LS373**	715
54LS375	**Fairchild**	**54LS375**	614
	Motorola	**SN54LS375**	1126
	TI	**SN54LS375**	715
54LS377	**Fairchild**	**54LS377**	614
	MMI	SN54LS377	
	Motorola	**SN54LS377**	1126
	SGS	T54LS377	
	TI	**SN54LS377**	715
◆54LS38	**Fairchild**	**54LS38**	612
	Motorola	**SN54LS38**	1122
	National	DM54LS38	
	SGS	T54LS38	
	TI	**SN54LS38**	715
◆54LS386	**Motorola**	**SN54LS386**	1123
	National	DM54LS386	
	Raytheon	RM8241	
	Signetics	S82S41	
	TI	SN54LS386	
54LS395	**Fairchild**	**54LS395**	614
	SGS	T54LS395	
◆54LS40	**Fairchild**	**54LS40**	612
	Motorola	**SN54LS40**	1122
	National	DM54LS40	
	SGS	T54LS40	
	TI	**SN54LS40**	715
54LS42	**Fairchild**	**54LS42**	608,612,621,623
	Motorola	**SN54LS42**	1130
	National	DM54LS42	
	SGS	T54LS42	
	TI	**SN54LS42**	715
54LS51	**Fairchild**	**54LS51**	608,612,621,623
	Motorola	**SN54LS51**	1123
	National	DM54LS51	
	SGS	T54LS51	
	TI	**SN54LS51**	715
◆54LS54	**Fairchild**	**54LS54**	608,612,621,623
	Motorola	**SN54LS54**	1123
	National	DM54LS54	
	SGS	T54LS54	
	TI	**SN54LS54**	715
◆54LS55	**Fairchild**	**54LS55**	612
	Motorola	**SN54LS55**	1123
	National	DM54LS55	
	SGS	T54LS55	
54LS670	**Fairchild**	**54LS670**	614
	Motorola	**SN54LS670**	1128
	National	DM54LS670	
	SGS	T54LS670	
	TI	**SN54LS670**	716
54LS73	**Motorola**	**SN54LS73A**	1126
	National	DM54LS73	
		DM54LS73A	
	TI	**SN54LS73A**	715
54LS74	**Fairchild**	**54LS74**	608,612,621,623
	Motorola	**SN54LS74A**	1126
	National	DM54LS74	
		DM54LS74A	
	SGS	T54LS74	
	TI	**SN54LS74A**	715
54LS75	**Motorola**	**SN54LS75**	1126
	National	DM54LS75	
	TI	**SN54LS75**	715
54LS76	**Motorola**	**SN54LS76A**	1126
	National	DM54LS76	
	TI	**SN54LS76A**	715
◆54LS78	**Motorola**	**SN54LS78A**	1126
	National	DM54LS78	
	TI	**SN54LS78A**	715
54LS83	**Fairchild**	**54LS83A**	608,612,621,623
	Motorola	**SN54LS83A**	1132
	National	DM54LS83A	
	SGS	T54LS83	
	Signetics	54LS83A	
	TI	**SN54LS83A**	715
54LS83A	**Fairchild**	**54LS83A**	608,612,621,623
	Motorola	**SN54LS83A**	1132
	National	DM54LS83A	
	SGS	T54LS83	
	Signetics	54LS83	
	TI	**SN54LS83A**	715
54LS85	**Fairchild**	**54LS85**	608,612,621,623
	Motorola	**SN54LS85**	1131
	National	DM54LS85	
	TI	**SN54LS85**	715
54LS86	**Motorola**	**SN54LS86**	1123
	National	DM54LS86	
	SGS	T54LS86	
	TI	**SN54LS86A**	715
54LS90	**Motorola**	**SN54LS90**	1127
	National	DM54LS90	
	SGS	T54LS90	
	TI	**SN54LS90**	715
54LS92	**Motorola**	**SN54LS92**	1127
	National	DM54LS92	
	SGS	T54LS92	
	TI	**SN54LS92**	715
54LS93	**Motorola**	**SN54LS93**	1127
	National	DM54LS93	
	SGS	T54LS93	
	TI	**SN54LS93**	715
54LS95B	**Fairchild**	**54LS95B**	608,612,621,623
	Motorola	**SN54LS95B**	1128
	National	DM54LS95B	
	SGS	T54LS95	
	TI	SN54LS95B	
54LS96	**TI**	**SN54LS96**	715
54S00	**TI**	**SN54S00**	716
54S02	**TI**	**SN54S02**	716
54S04	**TI**	**SN54S04**	716
◆54S05	**TI**	**SN54S05**	716
54S08	**TI**	**SN54S08**	716
◆54S09	**TI**	**SN54S09**	716
54S11	**TI**	**SN54S11**	716
54S140	National	DM54S140	
	TI	**SN54S140**	716
◆54S15	**TI**	**SN54S15**	716
54S189	AMD	SN54S189	
	National	DM54S189	
54S200	National	DM54S200	
	Signetics	54S201	
		S82S116	
		S82S16	
54S201	National	DM54S200	
	Signetics	54S200	
		S82S116	
		S82S16	
◆54S22	National	DM54S22	
	TI	**SN54S22**	716
54S260	**TI**	**SN54S260**	716
54S289	AMD	SN5489-1	
		SN54S289	
	National	DM5489	
		DM54S289	
		MM54S289	
	Signetics	54S301	
		S8225	
		S82S25	
54S301	AMD	SN5489-1	
		SN54S289	
	National	DM5489	
		DM54S289	
		MM54S289	
	Signetics	54S289	
		S8225	
		S82S25	
◆54S32	**TI**	**SN54S32**	716
54S37	**TI**	**SN54S37**	716
54S534	MMI	54S534	
54S85	**TI**	**SN54S85**	716
54S86	**TI**	**SN54S86**	716
55450	SiliconG	SG55450	
	TI	SN55450	
55451	Fairchild	55451	
	National	DS55451	
	SiliconG	SG55451	
	TI	SN55451	
55452	National	DS55452	
	SiliconG	SG55452	
	TI	SN55452	
55453	Fairchild	55453	
	National	DS55453	
		LM55453	
	SiliconG	SG55453	
	TI	SN55453	
55454	National	DS55454	
	SiliconG	SG55454	
	TI	SN55454	
◆68451	**Mostek**	**MK68451**	1651
	Motorola	**MC68451**	1656
68682	Motorola	MC68682	
7400	Fairchild	7400	
	National	DM7400	
	TI	SN7400	
	Toshiba	TC7400	
7402	Fairchild	7402	
	National	DM7402	
	TI	SN7402	
7403	Fairchild	7403	
	National	DM7403	
	TI	SN7403	
7404	Fairchild	7404	
	National	DM7404	
	TI	SN7404	
	Toshiba	TC7404	
7405	Fairchild	7405	
	National	DM7405	
	TI	SN7405	
7406	Fairchild	7406	
	National	DM7406	
	TI	SN7406	
7407	Fairchild	7407	
	Hitachi	HD7407	
	National	DM7407	
	TI	SN7407	
7408	Fairchild	7408	
	National	DM7408	
	TI	SN7408	
7410	Fairchild	7410	
	National	DM7410	
	TI	SN7410	
	Toshiba	TC7410	
74107	Fairchild	74107	
	National	DM74107	
	TI	SN74107	
74109	National	DM74109	
	TI	SN74109	
7411	Fairchild	7411	
	Hitachi	HD7411	
	National	DM7411	
74116	TI	SN74116	
74121	Fairchild	74121	
	National	DM74121	
	TI	SN74121	
74123	Fairchild	74123	
	National	DM74123	
	TI	SN74123	
74125	Fairchild	74125	
	National	DM74125	
		DM8093	
	TI	SN74125	
		SN74425	
74126	Fairchild	74126	
	National	DM74126	
		DM8094	
	TI	SN74126	
		SN74426	
74128	TI	SN74128	
7413	Fairchild	7413	
	National	DM7413	
	TI	SN7413	
74132	Fairchild	74132	
	National	DM74132	
	TI	SN74132	
7414	Fairchild	7414	
	National	DM7414	
	TI	SN7414	
74141	Fairchild	74141	
		93141	
	Hitachi	HD7441	
	National	DM74141	
		DM7441	
	Signetics	7441	
	TI	SN74141	
74145	Fairchild	74145	
	National	DM74145	
	TI	SN74145	
74147	Motorola	MC14508	
	National	DM74147	
	RCA	CD4508	
	SGS	HCC/HCF4508	
	Signetics	HEF4508	
		N82147	
	Solitron	CM4508	
	SSS	SCL4508	
	TI	SN74147	
	Toshiba	TC4508	
74148	National	DM74148	
		DM8318	
	Signetics	N82148	
	TI	SN74148	
74150	Fairchild	74150	
	National	DM74150	
	TI	SN74150	
74153	Fairchild	74153	
	National	DM74153	
	TI	SN74153	
74155	Fairchild	74155	
	National	DM74155	
	TI	SN74155	
74156	Fairchild	74156	
	National	DM74156	
	TI	SN74156	
74157	National	DM74157	
	TI	SN74157	
7416	Fairchild	7416	
	National	DM7416	
	TI	SN7416	
74160	Fairchild	74160	
	National	DM74160	
	TI	SN74160	
74161	Fairchild	74161	
	National	DM74161	
	TI	SN74161	
74163	Fairchild	74163	
	National	DM74163	
	TI	SN74163	
74165	Fairchild	74165	
	National	DM74165	
		DM8590	
	TI	SN74165	
74166	Fairchild	74166	
	National	DM74166	
	TI	SN74166	

◆ Discontinued

Bold face device numbers indicate manufacturers data is provided in the IC Master on the pages noted.

ALTERNATE SOURCE DIRECTORY

Signetics (Cont'd)

Manufacturer Device	Replacement Source	Device	IC Master Page
7417	Fairchild	7417	
	National	DM7417	
	TI	SN7417	
74170	Fairchild	74170	
	Hitachi	HD74170	
	National	DM74170	
	TI	SN74170	
74172	TI	SN74172	
74174	Fairchild	74174	
	National	DM74174	
	TI	SN74174	
74175	Fairchild	74175	
	National	DM74175	
	TI	SN74175	
74176	Fairchild	74176	
		96176	
	National	DM74176	
		DM8280	
	Raytheon	RC8280	
	TI	SN74176	
74177	Fairchild	74177	
	National	DM74177	
		DM8281	
	Raytheon	RC8281	
	TI	SN74177	
74180	Fairchild	74180	
	National	DM74180	
	TI	SN74180	
74181	Hitachi	HD74181	
	National	DM74181	
	Raytheon	RC9341	
	TI	SN74181	
74190	Fairchild	74190	
	National	DM74190	
	TI	SN74190	
74191	Fairchild	74191	
	National	DM74191	
	TI	SN74191	
74192	Fairchild	74192	
	National	DM74192	
		DM8560	
	Raytheon	RC9360	
	TI	SN74192	
74194	Fairchild	74194	
	National	DM74194	
	TI	SN74194	
74195	Fairchild	74195	
	National	DM74195	
	TI	SN74195	
74196	Fairchild	74196	
	National	DM74196	
		DM8290	
	Raytheon	RC8290	
	TI	SN74196	
74197	Fairchild	74197	
	National	DM74197	
		DM8291	
	Raytheon	RC8291	
	TI	SN74197	
74198	Fairchild	74198	
	National	DM74198	
	TI	SN74198	
74199	Fairchild	74199	
	National	DM74199	
	TI	SN74199	
7420	Fairchild	7420	
		9004	
	National	DM7420	
		DM9004C	
	TI	SN7420	
	Toshiba	TC7420	
7421	Fairchild	7421	
74221	TI	SN74221	
7426	Fairchild	7426	
	National	DM7426	
		DM8810	
	TI	SN7426	
7427	Fairchild	7427	
	National	DM7427	
	TI	SN7427	
74279	Fairchild	74279	
	TI	SN74279	
7428	TI	SN7428	
74298	Fairchild	74298	
	TI	SN74298	
7430	Fairchild	7430	
	National	DM7430	
	TI	SN7430	
7432	Fairchild	7432	
	National	DM7432	
	TI	SN7432	
7433	TI	SN7433	
74365A	TI	SN74365A	
		SN74366A	
74367A	Ti	SN74367A	
74368A	TI	SN74368A	
7437	Fairchild	7437	
	National	DM7437	
	TI	SN7437	
7438	Fairchild	7438	
	National	DM7438	
	TI	SN7438	
7439	Fairchild	7439	
7440	Fairchild	7440	
	National	DM7440	
	TI	SN7440	
7441	Fairchild	74141	
		93141	
	Hitachi	HD7441	
	National	DM74141	
		DM7441	
	Signetics	74141	
	TI	SN74141	
7442	Fairchild	7442	
	National	DM7442	
		DM8842	
	TI	SN7442A	
7445	Fairchild	7445	
	National	DM7445	
	TI	SN7445	
7450	Fairchild	7450	
	National	DM7450	
	TI	SN7450	
7451	Fairchild	7451	
	Hitachi	HD7451	
	National	DM7451	
	TI	SN7451	
7473	Fairchild	7473	
	National	DM7473	
	TI	SN7473	
7474	Fairchild	7474	
	National	DM7474	
	TI	SN7474	
7475	Fairchild	7475	
	National	DM7475	
	TI	SN7475	
7476	Fairchild	7476	
	National	DM7476	
	TI	SN7476	
7485	Fairchild	7485	
	National	DM7485	
	TI	SN7485	
7486	Fairchild	7486	
	National	DM7486	
	TI	SN7486	
7494	Fairchild	7494	
	Hitachi	HD7494	
	TI	SN7494	
7496	Fairchild	7496	
	National	DM7496	
	TI	SN7496	
74F00	**Fairchild**	**74F00**	**1021,5310**
	Motorola	**MC74F00**	**1122**
74F02	**Fairchild**	**74F02**	**1021,5310**
	Motorola	**MC74F02**	**1122**
74F04	**Fairchild**	**74F04**	**1021,5310**
	Motorola	**MC74F04**	**1124**
74F08	**Fairchild**	**74F08**	**1021,5310**
	Motorola	**MC74F08**	**1122**
74F10	**Fairchild**	**74F10**	**1021,5310**
	Motorola	**MC74F10**	**1122**
74F109	**Fairchild**	**74F109**	**1021,5310**
	Motorola	**MC74F109**	**1126**
74F11	**Fairchild**	**74F11**	**1021,5310**
	Motorola	**MC74F11**	**1122**
74F138	**Fairchild**	**74F138**	**1025,5310**
	Motorola	**MC74F138**	**1130**
74F139	**Fairchild**	**74F139**	**1025**
	Motorola	**MC74F139**	**1130**
74F157	**Fairchild**	**74F157**	**1025,5310**
74F158	**Fairchild**	**74F158**	**1025,5310**
74F20	**Fairchild**	**74F20**	**1021,5310**
	Motorola	**MC74F20**	**1122**
74F240	**Fairchild**	**74F240**	**1024,5310**
	Motorola	**MC74F240**	**1124**
74F241	**Fairchild**	**74F241**	**1024,5310**
	Motorola	**MC74F241**	**1124**
74F242	**Fairchild**	**74F242**	**1024**
	Motorola	**MC74F242**	**1124**
74F243	**Fairchild**	**74F243**	**1024**
	Motorola	**MC74F243**	**1124**
74F244	**Fairchild**	**74F244**	**1024,5310**
	Motorola	**MC74F244**	**1124**
74F257	**Fairchild**	**74F257**	**1025,5310**
74F258	**Fairchild**	**74F258**	**1025,5310**
74F32	**Fairchild**	**74F32**	**1021**
	Motorola	**MC74F32**	**1122**
74F373	**Fairchild**	**74F373**	**1022,5310**
	Motorola	**MC74F373**	**1126**
74F374	**Fairchild**	**74F374**	**1022,5310**
	Motorola	**MC74F374**	**1126**
74F521	**Fairchild**	**74F521**	**1026,5310**
74F533	**Fairchild**	**74F533**	**1022,5310**
	Motorola	**MC74F533**	**1126**
74F534	**Fairchild**	**74F534**	**1022,5310**
	Motorola	**MC74F534**	**1127**
74F74	**Fairchild**	**74F74**	**1021,5310**
	Motorola	**MC74F74**	**1126**
74F86	**Fairchild**	**74F86**	**1021,5310**
74H101	Fairchild	74H101	
	TI	SN74H101	
74HC00	Hitachi	HD74HC00	
	Motorola	**MC74HC00**	**1122**
	National	MM74HC00	
	RCA	**CD74HC00**	**1149**
	SPI	SP74HC00	
	SGS	M74HC00	
	TI	SN74HC00	
	Toshiba	**TC40H000**	**1363**
	Universal	US74HC00	
74HC02	Hitachi	HD74HC02	
	Motorola	**MC74HC02**	**1122**
	National	MM74HC02	
	RCA	**CD74HC02**	**1149**
	SPI	SP74HC02	
	SGS	M74HC02	
	TI	SN74HC02	
	Toshiba	**TC40H002**	**1363**
	Universal	US74HC02	
74HC08	Hitachi	HD74HC08	
	Motorola	**MC74HC08**	**1122**
	National	MM74HC08	
	RCA	**CD74HC08**	**1149**
	SPI	SP74HC08	
	SGS	M74HC08	
	TI	SN74HC08	
	Universal	US74HC08	
74HC10	Hitachi	HD74HC10	
	Motorola	**MC74HC10**	**1122**
	National	MM74HC10	
	RCA	**CD74HC10**	**1149**
	SPI	SP74HC10	
	SGS	M74HC10	
	SiliconG	SG75474	
	TI	SN74HC10	
	Toshiba	**TC40H010**	**1363**
	Universal	US74HC10	
74HC107	Hitachi	HD74HC107	
	Motorola	**MC74HC107**	**1126**
	National	MM74HC107	
	Nitron	NC74HC107	
	RCA	**CD74HC107**	**1149**
	SPI	SP74HC107	
	SGS	M74HC107	
	TI	SN74HC107	
	Toshiba	**TC40H107**	**1363**
	Universal	US74HC107	
74HC109	Hitachi	HD74HC109	
		HD74HC14	
	Motorola	**MC74HC109**	**1126**
	National	MM74HC109	
	Nitron	NC74HC109	
	RCA	**CD74HC109**	**1149**
	SPI	SP74HC109	
	SGS	M74HC109	
	TI	SN74HC109	
	Toshiba	**TC74HC109**	**1363**
	Universal	US74HC109	
74HC11	Hitachi	HD74HC11	
	Motorola	**MC74HC11**	**1122**
	National	MM74HC11	
	RCA	**CD74HC11**	**1149**
	SPI	SP74HC11	
	SGS	M74HC11	
	TI	SN74HC11	
	Toshiba	**TC40H011**	**1363**
	Universal	US74HC11	
74HC112	Hitachi	HD74HC112	
	Motorola	**MC74HC112**	**1126**
	National	MM74HC112	
	RCA	**CD74HC112**	**1149**
			(Continued)
74HC112	SPI	SP74HC112N	
	SGS	M74HC112	
	TI	SN74HC112	
	Universal	US74HC112	
74HC123	Hitachi	HD74HC123	
	Motorola	MC74HC123	
	National	MM74HC123	
	SGS	M74HC123	
	TI	SN74HC123	
	Universal	US74HC123	
74HC132	Hitachi	HD74HC132	
	Motorola	**MC74HC132**	**1125**
	National	MM74HC132	
	RCA	**CD74HC132**	**1149**
	SPI	SP74HC132	
	SGS	M74HC132	
	TI	SN74HC132	
	Universal	US74HC132	
74HC133	**Motorola**	**MC74HC133**	**1122**
	National	MM74HC133	
	RCA	CD74HC133	
	SPI	SP74HC133	
	SGS	M74HC133	
	TI	SN74HC133	
	Universal	US74HC133	
74HC138	Hitachi	HD74HC138	
	Motorola	**MC74HC138**	**1130**
	National	MM74HC138	
	Nitron	NC74HC138	
	RCA	**CD74HC138**	**1150**
	SPI	SP74HC138	
	SGS	M74HC138	
	SSS	SS74HC138	
	TI	SN74HC138	
	Universal	US74HC138	
74HC139	Hitachi	HD74HC139	
	Motorola	**MC74HC139**	**1130**
	National	MM74HC139	
	Nitron	NC74HC139	
	RCA	**CD74HC139**	**1150**
	SPI	SP74HC139	
	SGS	M74HC139	
	SSS	SS74HC139	
	TI	SN74HC139	
	Toshiba	**TC40H139**	**1363**
	Universal	US74HC139	
74HC14	**Motorola**	**MC74HC14**	**1125**
	National	MM74HC14	
	RCA	**CD74HC14**	**1149**
	SPI	SP74HC14	
	SGS	M74HC14	
	TI	SN74HC14	
	Universal	US74HC14	
74HC147	Hitachi	HD74HC147	
	Motorola	**MC74HC147**	**1131**
	National	MM74HC147	
	RCA	**CD74HC147**	**1150**
	SPI	SP74HC147	
	SGS	M74HC147	
	TI	SN74HC147	
	Universal	US74HC147	
74HC151	Hitachi	HD74HC151	
	Motorola	**MC74HC151**	**1129**
	National	MM74HC151	
	RCA	**CD74HC151**	**1150**
	SPI	SP74HC151	
	SGS	M74HC151	
	TI	SN74HC151	
	Universal	US74HC151	
74HC153	Hitachi	HD74HC153	
	Motorola	**MC74HC153**	**1129**
	National	MM74HC153	
	RCA	**CD74HC153**	**1150**
	SPI	SP74HC153	
	SGS	M74HC153	
	TI	SN74HC153	
	Toshiba	**TC40H153**	**1363**
	Universal	US74HC153	
74HC154	Hitachi	HD74HC154	
	Motorola	**MC74HC154**	**1130**
	National	MM74HC154	
	RCA	**CD74HC154**	**1150**
	SGS	M74HC154	
	TI	SN74HC154	
	Universal	US74HC154	
74HC157	Hitachi	HD74HC157	
	Motorola	**MC74HC157**	**1129**
	National	MM74HC157	
	Nitron	NC74HC157	
	RCA	**CD74HC157**	**1150**
	SPI	SP74HC157	
	SGS	M74HC157	

(Continued)

◆ Discontinued

The manufacturers report their devices can be used as direct replacements.
Performance details often differ, so compare the specifications considering your requirements.

Signetics (Cont'd)

Manufacturer Device	Replacement Source	Device	IC Master Page
74HC157	TI	SN74HC157	
	Toshiba	**TC40H157**	**1363**
	Universal	US74HC157	
74HC158	Hitachi	HD74HC158	
	Motorola	**MC74HC158**	**1129**
	National	MM74HC158	
	RCA	**CD74HC158**	**1150**
	SPI	SP74HC158	
	SGS	M74HC158	
	TI	SN74HC158	
	Toshiba	**TC40H158**	**1363**
	Universal	US74HC158	
74HC160	**Motorola**	**MC74HC160**	**1127**
	National	MM74HC160	
	RCA	**CD74HC160**	**1150**
	SPI	SP74HC160	
	SGS	M74HC160	
	TI	SN74HC160	
	Universal	US74HC160	
74HC161	Hitachi	HD74HC161	
	Motorola	**MC74HC161**	**1127**
	National	MM74HC161	
	RCA	**CD74HC161**	**1150**
	SPI	SP74HC161	
	SGS	M74HC161	
	TI	SN74HC161	
	Universal	US74HC161	
74HC162	Hitachi	HD74HC162	
	Motorola	**MC74HC162**	**1127**
	National	MM74HC162	
	RCA	**CD74HC162**	**1150**
	SPI	SP74HC162	
	SGS	M74HC162	
	TI	SN74HC162	
	Universal	US74HC162	
74HC163	Hitachi	HD74HC163	
	Motorola	**MC74HC163**	**1127**
	National	MM74HC163	
	RCA	**CD74HC163**	**1150**
	SPI	SP74HC163	
	SGS	M74HC163	
	TI	SN74HC163	
	Universal	US74HC163	
74HC164	Hitachi	HD74HC164	
	Motorola	**MC74HC164**	**1128**
	National	MM74HC164	
	RCA	**CD74HC164**	**1149**
	SPI	SP74HC164	
	SGS	M74HC164	
	TI	SN74HC164	
	Universal	US74HC164	
74HC165	Hitachi	HD74HC165	
	Motorola	**MC74HC165**	**1128**
	National	MM74HC165	
	RCA	**CD74HC165**	**1149**
	SPI	SP74HC165	
	SGS	M74HC165	
	TI	SN74HC165	
	Universal	US74HC165	
74HC166	Motorola	MC74HC166	
	Nitron	NC74HC166	
	RCA	**CD74HC166**	**1149**
	SGS	M74HC166	
	TI	SN74HC166	
	Universal	US74HC166	
74HC173	Hitachi	HD74HC173	
	Motorola	**MC74HC173**	**1126**
	National	MM74HC173	
	RCA	**CD74HC173**	**1149**
	SPI	SP74HC173	
	SGS	M74HC173	
	TI	SN74HC173	
	Universal	US74HC173	
74HC174	Hitachi	HD74HC174	
	Motorola	**MC74HC174**	**1126**
	National	MM74HC174	
	Nitron	NC74HC174	
	RCA	**CD74HC174**	**1149**
	SPI	SP74HC174	
	SGS	M74HC174	
	TI	SN74HC174	
	Toshiba	**TC40H174**	**1363**
	Universal	US74HC174	
74HC175	Hitachi	HD74HC175	
	Motorola	**MC74HC175**	**1126**
	National	MM74HC175	
	Nitron	NC74HC175	
	RCA	**CD74HC175**	**1149**
	SPI	SP74HC175	
	SGS	M74HC175	
			(Continued)
74HC175	TI	SN74HC175	
	Toshiba	**TC40H175**	**1363**
	Universal	US74HC175	
74HC190	Motorola	MC74HC190	
	RCA	**CD74HC190**	**1150**
74HC191	Hitachi	HD74HC191	
	Nitron	NC74HC191	
	RCA	**CD74HC191**	**1150**
	SGS	M74HC191	
	TI	SN74HC191	
	Universal	US74HC191	
74HC192	Hitachi	HD74HC192	
	Motorola	**MC74HC192**	**1127**
	National	MM74HC192	
	RCA	**CD74HC192**	**1150**
	SPI	SP74HC192	
	SGS	M74HC192	
	TI	SN74HC192	
	Toshiba	**TC40H192**	**1363**
	Universal	US74HC192	
74HC193	Hitachi	HD74HC193	
	Motorola	**MC74HC193**	**1127**
	National	MM74HC193	
	RCA	**CD74HC193**	**1150**
	SPI	SP74HC193	
	SGS	M74HC193	
	TI	SN74HC193	
	Toshiba	**TC40H193**	**1363**
	Universal	US74HC193	
74HC194	Hitachi	HD74HC194	
	Motorola	**MC74HC194**	**1128**
	National	MM74HC194	
	RCA	**CD74HC194**	**1149**
	SPI	SP74HC194	
	SGS	M74HC194	
	TI	SN74HC194	
	Universal	US74HC194	
74HC195	Hitachi	HD74HC195	
	Motorola	**MC74HC195**	**1128**
	National	MM74HC195	
	RCA	**CD74HC195**	**1149**
	SPI	SP74HC195	
	SGS	M74HC195	
	TI	SN74HC195	
	Universal	US74HC195	
74HC20	Hitachi	HD74HC20	
	Motorola	**MC74HC20**	**1122**
	National	MM74HC20	
	RCA	**CD74HC20**	**1149**
	SPI	SP74HC20	
	SGS	M74HC20	
	TI	SN74HC20	
	Toshiba	**TC40H020**	**1363**
	Universal	US74HC20	
74HC221	Motorola	MC74HC221	
	National	MM74HC221	
	RCA	**CD74HC221**	**1150**
	SGS	M74HC221	
	Universal	US74HC221	
74HC238	**RCA**	**CD74HC238**	**1150**
	SPI	SP74HC238	
	SGS	M74HC238	
	SSS	SS74HC238	
	TI	SN74HC238	
74HC240	Hitachi	HD74HC240	
	Mitel	MD74HC240	
	Motorola	**MC74HC240**	**1124**
	National	MM74HC240	
	Nitron	NC74HC240	
	RCA	**CD74HC240**	**1149**
	SPI	SP74HC240	
	SGS	M74HC240	
	SSS	SS74HC240	
	Supertex	SI74HC240	
	TI	SN74HC240	
	Toshiba	**TC40H240**	**1363**
	Universal	US74HC240	
	Zytrex	ZX74HC240	
74HC241	Hitachi	HD74HC241	
	Mitel	MD74HC241	
	Motorola	**MC74HC241**	**1124**
	National	MM74HC241	
	Nitron	NC74HC241	
	RCA	**CD74HC241**	**1149**
	SPI	SP74HC241	
	SGS	M74HC241	
	SSS	SS74HC241	
	Supertex	SI74HC241	
	TI	SN74HC241	
	Universal	US74HC240	
	Zytrex	ZX74HC241	
74HC242	Hitachi	HD74HC242	
	Motorola	**MC74HC242**	**1124**
	National	MM74HC242	
	Nitron	NC74HC242	
	RCA	**CD74HC242**	**1149**
		SGN	
	SPI	SP74HC242	
	SGS	M74HC242	
	TI	SN74HC242	
	Universal	US74HC242	
74HC243	Hitachi	HD74HC243	
	Motorola	**MC74HC243**	**1124**
		MC74HC245	**1124**
	National	MM74HC243	
	RCA	**CD74HC243**	**1149**
	SPI	SP74HC243	
	SGS	M74HC243	
		M74HC245	
	TI	SN74HC243	
	Universal	US74HC243	
74HC244	Hitachi	HD74HC244	
	Mitel	MD74HC244	
	Motorola	**MC74HC244**	**1124**
	National	MM74HC244	
	Nitron	NC74HC244	
	RCA	**CD74HC244**	**1149**
	SPI	SP74HC244	
	SGS	M74HC244	
	SSS	SS74HC244	
	Supertex	SI74HC244	
	TI	SN74HC244	
	Universal	US74HC244	
	Zytrex	ZX74HC244	
74HC245	Hitachi	HD74HC245	
	Motorola	**MC74HC245**	**1124**
	National	MM74HC245	
	Nitron	NC74HC245	
	RCA	**CD74HC245**	**1149**
	SSS	SS74HC245	
	TI	SN74HC245	
	Universal	US74HC245	
74HC251	Hitachi	HD74HC251	
	Motorola	**MC74HC251**	**1129**
	National	MM74HC251	
	RCA	**CD74HC251**	**1150**
	SPI	SP74HC251	
	SGS	M74HC251	
	TI	SN74HC251	
	Universal	US74HC251	
74HC253	Hitachi	HD74HC253	
	Motorola	**MC74HC253**	**1129**
	National	MM74HC253	
	RCA	**CD74HC253**	**1150**
	SPI	SP74HC253	
	SGS	M74HC253	
	TI	SN74HC253	
	Universal	US74HC253	
74HC257	Hitachi	HD74HC257	
	Motorola	**MC74HC257**	**1129**
	National	MM74HC257	
	Nitron	NC74HC257	
	RCA	**CD74HC257**	**1150**
	SPI	SP74HC257	
	SGS	M74HC257	
	TI	SN74HC257	
	Universal	US74HC257	
74HC259	Hitachi	HD74HC259	
	Motorola	**MC74HC259**	**1126**
	National	MM74HC259	
	RCA	**CD74HC259**	**1150**
	SPI	SP74HC259	
	TI	SN74HC259	
	Universal	US74HC259	
74HC266	Hitachi	HD74HC266	
	Motorola	**MC74HC266**	**1123**
	National	MM74HC266	
	SPI	SP74HC266	
	SGS	M74HC266	
	TI	SN74HC266	
	Universal	US74HC266	
74HC27	**Motorola**	**MC74HC27**	**1122**
	National	MM74HC27	
	RCA	**CD74HC27**	**1149**
	SPI	SP74HC27	
	SGS	M74HC27	
	TI	SN74HC27	
	Toshiba	**TC40H027**	**1363**
	Universal	US74HC27	
74HC273	CTI	74HC273	
	Hitachi	HD74HC273	
	Motorola	**MC74HC273**	**1126**
	Nitron	NC74HC273	
			(Continued)
74HC273	**RCA**	**CD74HC273**	**1149**
	SPI	SP74HC273	
	SGS	M74HC273	
	TI	SN74HC273	
	Universal	US74HC273	
74HC280	Hitachi	HD74HC280	
	Motorola	**MC74HC280**	**1132**
	National	MM74HC280	
	RCA	**CD74HC280**	**1150**
	SPI	SP74HC280	
	SGS	M74HC280	
	TI	SN74HC280	
74HC297	**RCA**	**CD74HC297**	**1150**
74HC299	**Motorola**	**MC74HC299**	**1129**
	National	MM74HC299	
	RCA	**CD74HC299**	**1149**
	SGS	M74HC299	
	Universal	US74HC299	
74HC30	Hitachi	HD74HC30	
	Motorola	**MC74HC30**	**1122**
	National	MM74HC30	
	RCA	**CD74HC30**	**1149**
	SPI	SP74HC30	
	SGS	M74HC30	
	TI	SN74HC30	
	Universal	US74HC30	
74HC32	Hitachi	HD74HC27	
		HD74HC32	
	Motorola	**MC74HC32**	**1122**
	National	MM74HC32	
	RCA	**CD74HC32**	**1149**
	SPI	SP74HC32	
	SGS	M74HC32	
	TI	SN74HC32	
	Toshiba	**TC40H032**	**1363**
	Universal	US74HC32	
74HC354	Hitachi	HD74HC354	
	Motorola	**MC74HC354**	**1130**
	National	MM74HC354	
	RCA	**CD74HC354**	**1150**
	SGS	M74HC354	
	TI	SN74HC354	
	Universal	US74HC354	
74HC356	Hitachi	HD74HC356	
	Motorola	**MC74HC356**	**1130**
	National	MM74HC356	
	RCA	**CD74HC356**	**1150**
	SGS	M74HC356	
	TI	SN74HC356	
	Universal	US74HC356	
74HC366	Hitachi	HD74HC366	
	Motorola	**MC74HC366**	**1124**
	National	MM74HC366	
	RCA	**CD74HC366**	**1149**
	SPI	SP74HC366	
	SGS	M74HC366	
	TI	SN74HC366	
	Universal	US74HC366	
74HC367	Hitachi	HD74HC367	
	Motorola	**MC74HC367**	**1124**
	National	MM74HC367	
	Nitron	NC74HC367	
	RCA	**CD74HC367**	**1149**
	SPI	SP74HC367	
	SGS	M74HC367	
	TI	SN74HC367	
	Universal	US74HC367	
74HC368	Hitachi	HD74HC368	
	Motorola	**MC74HC368**	**1124**
	National	MM74HC368	
	RCA	**CD74HC368**	**1149**
	SGS	M74HC368	
	TI	SN74HC368	
	Universal	US74HC368	
74HC373	Hitachi	HD74HC373	
	Mitel	MD74HC373	
	Motorola	**MC74HC373**	**1126**
	National	MM74HC373	
	Nitron	NC74HC373	
	RCA	**CD74HC373**	**1150**
	SPI	SP74HC373	
	SGS	M74HC373	
	SSS	SS74HC373	
	Supertex	SI74HC373	
	TI	SN74HC373	
	Universal	US74HC373	
	Zytrex	ZX74HC373	
74HC374	Hitachi	HD74HC374	
	Mitel	MD74HC374	
	Motorola	**MC74HC374**	**1126**
	National	MM74HC374	
	Nitron	NC74HC374	
			(Continued)

◆ Discontinued

Bold face device numbers indicate manufacturers data is provided in the IC Master on the pages noted.

Signetics (Cont'd)

Manufacturer Device	Replacement Source	Device	IC Master Page
74HC374	**RCA**	**CD74HC374**	**1149**
	SPI	SP74HC374	
	SGS	M74HC374	
	SSS	SS74HC374	
	TI	SN74HC374	
	Universal	US74HC374	
	Zytrex	ZX74HC374	
74HC377	Hitachi	HD74HC377	
	Motorola	MC74HC377	
	RCA	**CD74HC377**	**1149**
	SGS	M74HC377	
	TI	SN74HC377	
	Universal	US74HC377	
74HC390	Hitachi	HD74HC390	
	Motorola	**MC74HC390**	**1127**
	National	MM74HC390	
	RCA	**CD74HC390**	**1150**
	SPI	SP74HC390	
	SGS	M74HC390	
	TI	SN74HC390	
	Universal	US74HC390	
74HC393	Hitachi	HD74HC393	
	Motorola	**MC74HC393**	**1127**
	National	MM74HC393	
	Nitron	NC74HC393	
	RCA	**CD74HC393**	**1150**
	SPI	SP74HC393	
	SGS	M74HC393	
	TI	SN74HC393	
	Universal	US74HC393	
74HC4002	**Motorola**	**MC74HC4002**	**1123**
	National	MM74HC4002	
	RCA	**CD74HC4002**	**1149**
	SPI	SP74HC4002	
	SGS	M74HC4002	
	TI	SN74HC4002	
	Universal	US74HC4002	
74HC40104	**RCA**	**CD74HC40104**	**1149**
74HC40105	**RCA**	**CD74HC40105**	**1149**
74HC4017	**Motorola**	**MC74HC4017**	**1128**
	National	MM74HC4017	
	RCA	**CD74HC4017**	**1150**
	SPI	SP74HC4017	
	SGS	M74HC4017	
	TI	SN74HC4017	
	Universal	US74HC4017	
74HC4020	Hitachi	HD74HC4020	
	Motorola	**MC74HC4020**	**1128**
	National	MM74HC4020	
	RCA	**CD74HC4020**	**1150**
	SPI	SP74HC4020	
	SGS	M74HC4020	
	TI	SN74HC4020	
	Universal	US74HC4020	
74HC4024	Hitachi	HD74HC4024	
	Motorola	MC74HC4024	
	RCA	**CD74HC4024**	**1150**
	SGS	M74HC4024	
	TI	SN74HC4024	
	Universal	US74HC4024	
74HC4040	Hitachi	HD74HC4040	
	Motorola	**MC74HC4040**	**1128**
	National	MM74HC4040	
	RCA	**CD74HC4040**	**1150**
	SPI	SP74HC4040	
	SGS	M74HC4040	
	TI	SN74HC4040	
	Universal	US74HC4040	
74HC4046	Motorola	MC74HC4046	
	RCA	**CD74HC4046**	**1150**
74HC4049	**Motorola**	**MC74HC4049**	**1124**
	National	MM74HC4049	
	RCA	**CD74HC4049**	**1149**
	SGS	M74HC4049	
	TI	SN74HC4049	
	Universal	US74HC4049	
74HC4051	**Motorola**	**MC74HC4051**	**1130**
	RCA	**CD74HC4051**	**1150**
	SGS	M74HC4051	
	TI	SN74HC4051	
	Universal	US74HC4051	
74HC4052	**Motorola**	**MC74HC4052**	**1130**
	RCA	**CD74HC4052**	**1150**
	SGS	M74HC4052	
	TI	SN74HC4052	
	Universal	US74HC4052	
74HC4053	**Motorola**	**MC74HC4053**	**1130**
	RCA	**CD74HC4053**	**1150**
	SGS	M74HC4053	
		(Continued)	
74HC4053	TI	SN74HC4053	
	Universal	US74HC4053	
74HC4060	**Motorola**	**MC74HC4060**	**1128**
	National	MM74HC4060	
	RCA	**CD74HC4060**	**1150**
	SGS	M74HC4060	
	TI	SN74HC4060	
	Universal	US74HC4060	
74HC4067	Panasonic	MN74HC4067	
	RCA	**CD74HC4067**	**1150**
74HC4075	**Motorola**	**MC74HC4075**	**1122**
	National	MM74HC4075	
	RCA	**CD74HC4075**	**1149**
	SPI	SP74HC4075	
	TI	SN74HC4075	
	Toshiba	**TC74HC4075**	**1363**
74HC42	Hitachi	HD74HC42	
	Motorola	**MC74HC42**	**1130**
	National	MM74HC42	
	Nitron	NC74HC42	
	RCA	**CD74HC42**	**1150**
	SPI	SP74HC42	
	SGS	M74HC42	
	TI	SN74HC42	
	Universal	US74HC42	
74HC423	Motorola	MC74HC423	
	RCA	**CD74HC423**	**1150**
	SGS	M74HC423	
74HC4514	Hitachi	HD74HC4514	
	Motorola	**MC74HC4514**	**1130**
	National	MM74HC4514	
	RCA	**CD74HC4514**	**1150**
	SGS	M74HC4514	
	TI	SN74HC4514	
	Universal	US74HC4514	
74HC4520	**RCA**	**CD74HC4520**	**1150**
	SGS	M74HC4520	
74HC4538	**Motorola**	**MC74HC4538**	**1131**
	National	MM74HC4538	
	RCA	**CD74HC4538**	**1150**
	SGS	M74HC4538	
	Universal	US74HC4538	
74HC533	Hitachi	HD74HC533	
	Motorola	**MC74HC533**	**1126**
	National	MM74HC533	
	RCA	**CD74HC533**	**1150**
	SPI	SP74HC533	
	SGS	M74HC533	
	SSS	SS74HC533	
	TI	SN74HC533	
	Universal	US74HC533	
74HC534	Hitachi	HD74HC534	
	Motorola	**MC74HC534**	**1127**
	National	MM74HC534	
	RCA	**CD74HC534**	**1149**
	SPI	SP74HC534	
	SGS	M74HC534	
	SSS	SS74HC534	
	TI	SN74HC534	
	Universal	US74HC534	
74HC540	Hitachi	HD74HC540	
	Motorola	**MC74HC540**	**1125**
	RCA	**CD74HC540**	**1149**
	SGS	M74HC540	
	SSS	SS74HC540	
	TI	SN74HC540	
	Toshiba	**TC74HC540**	**1363**
	Universal	US74HC540	
74HC541	Hitachi	HD74HC541	
	Motorola	**MC74HC541**	**1125**
	RCA	**CD74HC541**	**1149**
	SGS	M74HC541	
	SSS	SS74HC541	
	TI	SN74HC541	
	Universal	US74HC541	
74HC563	Hitachi	HD74HC563	
	Motorola	**MC74HC563**	**1126**
	National	MM74HC563	
	RCA	**CD74HC563**	**1150**
	SPI	SP74HC563	
	SGS	M74HC563	
	SSS	SS74HC563	
	TI	SN74HC563	
	Universal	US74HC563	
74HC564	Hitachi	HD74HC564	
	Motorola	**MC74HC564**	**1127**
	National	MM74HC564	
	RCA	**CD74HC564**	**1149**
		MC74HC564	
	SGS	M74HC564	
	SSS	SS74HC564	
		(Continued)	
74HC564	TI	SN74HC564	
	Universal	US74HC564	
74HC573	Hitachi	HD74HC573	
	Motorola	**MC74HC573**	**1126**
	National	MM74HC573	
	RCA	**CD74HC573**	**1150**
	SPI	SP74HC573	
	SGS	M74HC573	
	SSS	SS74HC573	
	TI	SN74HC573	
	Toshiba	**TC74HC573**	**1363**
	Universal	US74HC573	
74HC574	Hitachi	HD74HC574	
	Motorola	**MC74HC574**	**1127**
	National	MM74HC574	
	RCA	**CD74HC574**	**1149**
	SPI	SP74HC574	
	SGS	M74HC574	
	SSS	SS74HC574	
	TI	SN74HC574	
	Universal	US74HC574	
74HC640	Hitachi	HD74HC640	
	Motorola	**MC74HC640**	**1125**
	National	MM74HC640	
	Nitron	NC74HC640	
	RCA	**CD74HC640**	**1149**
	SSS	SS74HC640	
	TI	SN74HC640	
	Universal	US74HC640	
74HC643	Hitachi	HD74HC643	
	Motorola	**MC74HC643**	**1125**
	National	MM74HC643	
	RCA	**CD74HC643**	**1149**
	SGS	M74HC643	
	SSS	SS74HC643	
	TI	SN74HC643	
	Universal	US74HC643	
74HC645	National	MM74HC645	
	SSS	SS74HC645	
	TI	SN74HC645	
74HC646	Hitachi	HD74HC646	
	Motorola	**MC74HC646**	**1125**
	National	MM74HC646	
	Nitron	NC74HC646	
	RCA	**CD74HC646**	**1149**
	SGS	M74HC646	
	TI	SN74HC646	
	Universal	US74HC646	
74HC648	Hitachi	HD74HC648	
	Motorola	**MC74HC648**	**1125**
	National	MM74HC648	
	RCA	**CD74HC648**	**1149**
	SGS	M74HC648	
	TI	SN74HC648	
	Universal	US74HC648	
74HC670	**RCA**	**CD74HC670**	**1149**
	SGS	M74HC670	
	TI	SN74HC670	
74HC688	**Motorola**	**MC74HC688**	**1131**
	National	MM74HC688	
	RCA	**CD74HC688**	**1150**
	SGS	M74HC688	
	TI	SN74HC688	
	Toshiba	**TC74HC688**	**1363**
74HC73	Hitachi	HD74HC73	
	Motorola	**MC74HC73**	**1126**
	National	MM74HC73	
	RCA	**CD74HC73**	**1149**
	SPI	SP74HC73	
	SGS	M74HC73	
	TI	SN74HC73	
	Toshiba	**TC74HC73**	**1363**
	Universal	US74HC73	
74HC74	Hitachi	HD74HC74	
	Motorola	**MC74HC74**	**1126**
	National	MM74HC74	
	Nitron	NC74HC74	
	RCA	**CD74HC74**	**1149**
	SPI	SP74HC74	
	SGS	M74HC74	
	TI	SN74HC74	
	Toshiba	**TC40H074**	**1363**
	Universal	US74HC74	
74HC75	Hitachi	HD74HC75	
	Motorola	**MC74HC75**	**1126**
	National	MM74HC75	
	RCA	**CD74HC75**	**1150**
	SPI	SP74HC75	
	SGS	M74HC75	
	TI	SN74HC75	
	Toshiba	**TC74HC75**	**1363**
	Universal	US74HC75	
74HC76	Hitachi	HD74HC76	
	Motorola	**MC74HC76**	**1126**
	National	MM74HC76	
	SPI	SP74HC76	
	SGS	M74HC76	
	TI	SN74HC76	
	Toshiba	**TC40H076**	**1363**
	Universal	US74HC76	
74HC85	**Motorola**	**MC74HC85**	**1131**
	National	MM74HC85	
	RCA	**CD74HC85**	**1150**
	SPI	SP74HC85	
	SGS	M74HC85	
	TI	SN74HC85	
	Universal	US74HC85	
74HC86	Hitachi	HD74HC86	
	Motorola	**MC74HC86**	**1123**
	National	MM74HC86	
	RCA	**CD74HC86**	**1149**
	SPI	SP74HC86N	
	SGS	M74HC86	
	TI	SN74HC86	
	Universal	US74HC86	
74HCT00	**RCA**	**CD74HCT00**	**1149**
	Universal	US74HCT00	
74HCT02	**RCA**	**CD74HCT02**	**1149**
	Universal	US74HCT02	
74HCT08	**RCA**	**CD74HCT08**	**1149**
	Universal	US74HCT08	
74HCT10	**RCA**	**CD74HCT10**	**1149**
	Universal	US74HCT10	
74HCT107	Nitron	NC74HCT107	
	RCA	CD74HCT107	
	Universal	US74HCT107	
74HCT109	Nitron	NC74HCT109	
	RCA	CD74HCT109	
	Universal	US74HCT109	
74HCT11	**RCA**	**CD74HCT11**	**1149**
	Universal	US74HCT11	
74HCT112	RCA	CD74HCT112	
	Universal	US74HCT112	
74HCT123	**RCA**	**CD74HCT123**	**1150**
	Universal	US74HCT123	
74HCT132	**RCA**	**CD74HCT132**	**1149**
	Universal	US74HCT132	
74HCT138	CTI	74HCT138	
	IDT	IDT74HCT138	
	Mitel	MD74HCT138	
	Motorola	MC74HCT138	
	Nitron	NC74HCT138	
	Plessey	MV74HCT138	
	RCA	**CD74HCT138**	**1150**
	SPI	SP74HCT138	
	SGS	M74HCT138	
	SSS	SS74HCT138	
	TI	SN74HCT138	
	Toshiba	**TC74HCT138**	**1363**
	Zytrex	ZX74HCT138-2	
74HCT139	IDT	IDT74HCT139	
	Mitel	MD74HCT139	
	Nitron	NC74HCT139	
	Plessey	MV74HCT139	
	SPI	SP74HCT139	
	Universal	US74HCT139	
	Zytrex	ZX74HCT139-2	
74HCT14	**RCA**	**CD74HCT14**	**1149**
	Universal	US74HCT14	
74HCT147	**RCA**	**CD74HCT147**	**1150**
	Universal	US74HCT147	
74HCT151	**RCA**	**CD74HCT151**	**1150**
	Universal	US74HCT151	
74HCT153	**RCA**	**CD74HCT153**	**1150**
	Universal	US74HCT153	
74HCT154	**RCA**	**CD74HCT154**	**1150**
	Universal	US74HCT154	
74HCT157	Motorola	MC74HCT157	
	Nitron	NC74HCT157	
	RCA	**CD74HCT157**	**1150**
	Universal	US74HCT157	
74HCT158	Motorola	MC74HCT158	
	RCA	**CD74HCT158**	**1150**
	Universal	US74HCT158	
74HCT160	National	MM74HCT160	
	RCA	**CD74HCT160**	**1150**
	Universal	US74HCT160	
	Zytrex	ZX74HCT160-2	
74HCT161	**RCA**	**CD74HCT161**	**1150**
	Universal	US74HCT161	
	Zytrex	ZX74HCT161-2	
74HCT162	**RCA**	**CD74HCT162**	**1150**
	Universal	US74HCT162	
	Zytrex	ZX74HCT162-2	

◆ Discontinued

The manufacturers report their devices can be used as direct replacements.
Performance details often differ, so compare the specifications considering your requirements.

Signetics (Cont'd)

Manufacturer Device	Replacement Source	Device	IC Master Page
74HCT163	**RCA**	**CD74HCT163**	**1150**
	Universal	US74HCT163	
	Zytrex	ZX74HCT163-2	
74HCT164	RCA	CD74HCT164	
	Universal	US74HCT164	
74HCT165	RCA	CD74HCT165	
	Universal	US74HCT165	
74HCT166	Nitron	NC74HCT166	
	RCA	**CD74HCT166**	**1149**
	Universal	US74HCT166	
74HCT173	RCA	CD74HCT173	
	Universal	US74HCT173	
74HCT174	Nitron	NC74HCT174	
	RCA	CD74HCT174	
	Universal	US74HCT174	
74HCT175	Nitron	NC74HCT175	
	RCA	CD74HCT175	
	Universal	US74HCT175	
74HCT190	**RCA**	**CD74HCT190**	**1150**
	Universal	US74HCT190	
74HCT191	Nitron	NC74HCT191	
	RCA	**CD74HCT191**	**1150**
	Universal	US74HCT191	
74HCT192	**RCA**	**CD74HCT192**	**1150**
	Universal	US74HCT192	
74HCT193	**RCA**	**CD74HCT193**	**1150**
	Universal	US74HCT193	
74HCT194	**RCA**	**CD74HCT194**	**1149**
	Universal	US74HCT194	
74HCT195	**RCA**	**CD74HCT195**	**1149**
	Universal	US74HCT195	
74HCT20	**RCA**	**CD74HCT20**	**1149**
	Universal	US74HCT20	
74HCT221	**RCA**	**CD74HCT221**	**1150**
	Universal	US74HCT221	
74HCT238	CTI	74HCT238	
	Plessey	MV74HCT238	
	RCA	**CD74HCT238**	**1150**
	SSS	SS74HCT238	
	TI	SN74HCT238	
74HCT240	CTI	74HCT240	
	Hitachi	HD74HCT240	
	Micrel	MIC74HCT240	
	MicroTech	74HCTR240	
	Mitel	MD74HCT240	
	Motorola	MC74HCT240	
	National	MM74HCT240	
	Nitron	NC74HCT240	
	Plessey	MV74HCT240	
	RCA	**CD74HCT240**	**1149**
	SPI	SP74HCT240	
	SGS	M74HCT240	
	SSS	SS74HCT240	
	Supertex	SI74HCT240	
	TI	SN74HCT240	
	Toshiba	**TC74HCT240**	**1363**
	Universal	US74HCT240	
	Zytrex	ZX74HCT240-2	
74HCT241	CTI	74HCT241	
	Hitachi	HD74HCT241	
	Micrel	MIC74HCT241	
	MicroTech	74HCTR241	
	Mitel	MD74HCT241	
	Motorola	MC74HCT241	
	National	MM74HCT241	
	Nitron	NC74HCT241	
	Plessey	MV74HCT241	
	RCA	**CD74HCT241**	**1149**
	SPI	SP74HCT241	
	SGS	M74HCT241	
	SSS	SS74HCT241	
	Supertex	SI74HCT241	
	TI	SN74HCT241	
	Toshiba	**TC74HCT241**	**1363**
	Universal	US74HCT241	
	Zytrex	ZX74HCT241-2	
74HCT242	Hitachi	HD74HCT242	
	Micrel	MIC74HCT242	
	Nitron	NC74HCT242	
	RCA	**CD74HCT242**	**1149**
	TI	SN74HCT242	
	Universal	US74HCT242	
74HCT243	Hitachi	HD74HCT243	
	Micrel	MIC74HCT243	
	RCA	CD74HCT243	
	TI	SN74HCT243	
	Universal	US74HCT243	
74HCT244	CTI	74HCT244	
	Hitachi	HD74HCT244	
	Micrel	MIC74HCT244	
			(Continued)
74HCT244	MicroTech	74HCTR244	
	Mitel	MD74HCT244	
	Motorola	MC74HCT244	
	National	MM74HCT244	
	Nitron	NC74HCT244	
	Plessey	MV74HCT244	
	RCA	**CD74HCT244**	**1149**
	SPI	SP74HCT244	
	SGS	M74HCT244	
	SSS	SS74HCT244	
	Supertex	SI74HCT244	
	TI	SN74HCT244	
	Toshiba	**TC74HCT244**	**1363**
	Universal	US74HCT244	
	Zytrex	ZX74HCT244-2	
74HCT245	CTI	74HCT245	
	GTEMicro	G74SC245	
	Hitachi	HD74HCT245	
	Micrel	MIC74HCT245	
	MicroTech	74HCTR245	
	Mitel	MD74HCT245	
	Motorola	MC74HCT245	
	National	MM74HCT245	
	Plessey	MV74HCT245	
		MV74SC245	
	RCA	**CD74HCT245**	**1149**
	SPI	SP74HCT245	
	SGS	M74HCT245	
	SSS	SS74HCT245	
	TI	SN74HCT245	
	Toshiba	**TC74HCT245**	**1363**
	Universal	US74HCT245	
74HCT251	**RCA**	**CD74HCT251**	**1150**
	Universal	US74HCT251	
74HCT253	**RCA**	**CD74HCT253**	**1150**
	Universal	US74HCT253	
74HCT257	Motorola	MC74HCT257	
	Nitron	NC74HCT257	
	RCA	**CD74HCT257**	**1150**
	Universal	US74HCT257	
74HCT259	**RCA**	**CD74HCT259**	**1150**
	Universal	US74HCT259	
74HCT266	Universal	US74HCT266	
74HCT27	**RCA**	**CD74HCT27**	**1149**
	Universal	US74HCT27	
74HCT273	CTI	74HCT139	
	Nitron	NC74HCT273	
	RCA	**CD74HCT139**	**1150**
		CD74HCT273	
	SSS	SS74HCT139	
	Universal	US74HCT273	
74HCT280	**RCA**	**CD74HCT280**	**1150**
74HCT297	**RCA**	**CD74HCT297**	**1150**
74HCT299	**RCA**	**CD74HCT299**	**1149**
	Universal	US74HCT299	
74HCT30	**RCA**	**CD74HCT30**	**1149**
	Universal	US74HCT30	
		US74HCT32	
74HCT32	**RCA**	**CD74HCT32**	**1149**
74HCT354	**RCA**	**CD74HCT354**	**1150**
	Universal	US74HCT354	
74HCT356	**RCA**	**CD74HCT356**	**1150**
	Universal	US74HCT356	
74HCT365	**RCA**	**CD74HCT365**	**1149**
	Universal	US74HCT365	
74HCT366	**RCA**	**CD74HCT366**	**1149**
	Universal	US74HCT366	
74HCT367	Nitron	NC74HCT367	
	RCA	**CD74HCT367**	**1149**
	Universal	US74HCT367	
74HCT368	**RCA**	**CD74HCT368**	**1149**
	Universal	US74HCT368	
74HCT373	CTI	74HCT373	
	GTEMicro	G74SC373	
	Hitachi	HD74HCT373	
	Micrel	MIC74HCT373	
	MicroTech	74HCTR373	
	Mitel	MD74HCT373	
	Motorola	MC74HCT373	
	National	MM74HCT373	
	Nitron	NC74HCT373	
	Plessey	MV74HCT373	
		MV74SC373	
	RCA	**CD74HCT373**	**1150**
	SPI	SP74HCT373	
	SGS	M74HCT373	
	SSS	SS74HCT373	
	Supertex	SI74HCT373	
	TI	SN74HCT373	
	Toshiba	**TC74HCT373**	**1363**
	Universal	US74HCT373	
	Zytrex	ZX74HCT373-2	
74HCT374	CTI	74HCT374	
	GTEMicro	G74SC374	
	Hitachi	HD74HCT374	
	Micrel	MIC74HCT374	
	MicroTech	74HCTR374	
	Mitel	MD74HCT374	
	Motorola	MC74HCT374	
	National	MM74HCT374	
	Nitron	NC74HCT374	
	Plessey	MV74HCT374	
		MV74SC374	
	RCA	CD74HCT374	
	SPI	SP74HCT374	
	SGS	M74HCT374	
	SSS	SS74HCT374	
	Supertex	SI74HCT374	
	TI	SN74HCT374	
	Toshiba	**TC74HCT374**	**1363**
	Universal	US74HCT374	
	Zytrex	ZX74HCT374-2	
74HCT377	RCA	CD74HCT377	
	Universal	US74HCT377	
74HCT390	**RCA**	**CD74HCT390**	**1150**
	Universal	US74HCT390	
74HCT393	**RCA**	**CD74HCT393**	**1150**
74HCT4002	**RCA**	**CD74HCT4002**	**1149**
	Universal	US74HCT4002	
74HCT40104	**RCA** •	**CD74HCT40104**	**1149**
74HCT40105	**RCA**	**CD74HCT40105**	**1149**
74HCT4017	**RCA**	**CD74HCT4017**	**1150**
	Universal	US74HCT4017	
74HCT4020	**RCA**	**CD74HCT4020**	**1150**
	Universal	US74HCT4020	
74HCT4024	**RCA**	**CD74HCT4024**	**1150**
	Universal	US74HCT4024	
74HCT4040	**RCA**	**CD74HCT4040**	**1150**
	Universal	US74HCT4040	
74HCT4049	RCA	CD74HCT4049	
	Universal	US74HCT4049	
74HCT4050	RCA	CD74HCT4050	
	Universal	US74HCT4050	
74HCT4051	**RCA**	**CD74HCT4051**	**1150**
	Universal	US74HCT4051	
74HCT4052	**RCA**	**CD74HCT4052**	**1150**
	Universal	US74HCT4052	
74HCT4053	**RCA**	**CD74HCT4053**	**1150**
	Universal	US74HCT4053	
74HCT4060	**RCA**	**CD74HCT4060**	**1150**
	Universal	US74HCT4060	
74HCT42	Nitron	NC74HCT42	
	RCA	**CD74HCT42**	**1150**
	Universal	US74HCT42	
74HCT423	**RCA**	**CD74HCT423**	**1150**
	Universal	US74HCT423	
74HCT4511	**RCA**	**CD74HCT4511**	**1150**
	Universal	US74HCT4511	
74HCT4514	**RCA**	**CD74HCT4514**	**1150**
	Universal	US74HCT4514	
74HCT4538	**RCA**	**CD74HCT4538**	**1150**
	Universal	US74HCT4538	
74HCT4543	**RCA**	**CD74HCT4543**	**1150**
	Universal	US74HCT4543	
		USHCT4543	
74HCT533	CTI	74HCT533	
	Hitachi	HD74HCT533	
	Micrel	MIC74HCT533	
	MicroTech	74HCTR533	
	Motorola	MC74HCT533	
	Plessey	MV74HCT533	
	RCA	**CD74HCT533**	**1150**
	SSS	SS74HCT533	
	TI	SN74HCT533	
	Universal	US74HCT533	
	Zytrex	ZX74HCT533	
74HCT534	CTI	74HCT534	
	Hitachi	HD74HCT534	
	Micrel	MIC74HCT534	
	MicroTech	74HCTR534	
	Motorola	MC74HCT534	
	Plessey	MV74HCT534	
	RCA	CD74HCT534	
	SSS	SS74HCT534	
	TI	SN74HCT534	
	Universal	US74HCT534	
	Zytrex	ZX74HCT534-2	
74HCT540	CTI	74HCT540	
	Hitachi	HD74HCT540	
	Micrel	MIC74HCT540	
	MicroTech	74HCTR540	
	Mitel	MD74HCT540	
			(Continued)
74HCT540	Motorola	MC74HCT540	
	Plessey	MV74HCT540	
	RCA	**CD74HCT540**	**1149**
	SPI	SP74HCT540	
	SGS	M74HCT540	
	SSS	SS74HCT540	
	TI	SN74HCT540	
	Toshiba	**TC74HCT540**	**1363**
	Universal	US74HCT540	
	Zytrex	ZX74HCT540-2	
74HCT541	CTI	74HCT541	
	Hitachi	HD74HCT541	
	Micrel	MIC74HCT541	
	MicroTech	74HCTR541	
	Mitel	MD74HCT541	
	Motorola	MC74HCT541	
	Plessey	MV74HCT541	
	RCA	**CD74HCT541**	**1149**
	SPI	SP74HCT541	
	SGS	M74HCT541	
	SSS	SS74HCT541	
	TI	SN74HCT541	
	Toshiba	**TC74HCT541**	**1363**
	Universal	US74HCT541	
	Zytrex	ZX74HCT541-2	
74HCT563	CTI	74HCT563	
	Hitachi	HD74HCT563	
	Micrel	MIC74HCT563	
	MicroTech	74HCTR563	
	Motorola	MC74HCT563	
	Plessey	MV74HCT563	
	RCA	**CD74HCT563**	**1150**
	SGS	M74HCT563	
	SSS	SS74HCT563	
	TI	SN74HCT563	
	Toshiba	**TC74HCT563**	**1363**
	Universal	US74HCT563	
74HCT564	CTI	74HCT564	
	Hitachi	HD74HCT564	
	Micrel	MIC74HCT564	
	MicroTech	74HCTR564	
	Motorola	MC74HCT564	
	Plessey	MV74HCT564	
		MV74HCT573	
	RCA	CD74HCT564	
	SGS	M74HCT564	
	SSS	SS74HCT564	
	TI	SN74HCT564	
	Toshiba	**TC74HCT564**	**1363**
	Universal	US74HCT564	
74HCT573	CTI	74HCT573	
	Hitachi	HD74HCT573	
	Micrel	MIC74HCT573	
	MicroTech	74HCTR573	
	Mitel	MD74HCT573	
	Motorola	MC74HCT573	
	RCA	**CD74HCT573**	**1150**
	SPI	SP74HCT573	
	SGS	M74HCT573	
	SSS	SS74HCT573	
	TI	SN74HCT573	
	Toshiba	TC74HCT573	
	Universal	US74HCT573	
74HCT574	CTI	74HCT574	
	Hitachi	HD74HCT574	
	MicroTech	74HCTR574	
	Mitel	MD74HCT574	
	Motorola	MC74HCT574	
	Plessey	MV74HCT574	
	RCA	CD74HCT574	
	SPI	SP74HCT574	
	SGS	M74HCT574	
	SSS	SS74HCT574	
	TI	SN74HCT574	
	Toshiba	**TC74HCT574**	**1363**
	Universal	US74HCT574	
		US75HCT574	
74HCT640	Hitachi	HD74HCT640	
	MicroTech	74HCTR640	
	Motorola	MC74HCT640	
	Nitron	NC74HCT640	
	RCA	**CD74HCT640**	**1149**
	SGS	M74HCT640	
	SSS	SS74HCT640	
	TI	SN74HCT640	
	Toshiba	**TC74HCT640**	**1363**
	Universal	US74HCT640	
	Zytrex	ZX74HCT640-2	
74HCT643	Hitachi	HD74HCT643	
	MicroTech	74HCTR643	
	Motorola	MC74HCT643	
	RCA	**CD74HCT643**	**1149**
			(Continued)

◆ Discontinued

Bold face device numbers indicate manufacturers data is provided in the IC Master on the pages noted.

ALTERNATE SOURCE DIRECTORY

Signetics (Cont'd)

Manufacturer Device	Replacement Source	Device	IC Master Page
74HCT643	SGS	M74HCT643	
	TI	SN74HCT643	
	Toshiba	**TC74HCT643**	**1363**
	Universal	US74HCT643	
	Zytrex	ZX74HCT643-2	
74HCT645	SSS	SS74HCT645	
	TI	SN74HCT645	
74HCT646	Hitachi	HD74HCT646	
	Nitron	NC74HCT646	
	RCA	**CD74HCT646**	**1149**
	SGS	M74HCT646	
	TI	SN74HCT646	
	Toshiba	**TC74HCT646**	**1363**
	Universal	US74HCT646	
74HCT648	Hitachi	HD74HCT648	
	RCA	**CD74HCT648**	**1149**
	SGS	M74HCT648	
	TI	SN74HCT648	
	Toshiba	**TC74HCT648**	**1363**
	Universal	US74HCT648	
74HCT670	**RCA**	**CD74HCT670**	**1149**
74HCT688	**RCA**	**CD74HCT688**	**1150**
	Universal	US74HCT688	
74HCT73	**RCA**	**CD74HCT73**	**1149**
	Universal	US74HCT73	
74HCT74	Nitron	NC74HCT74	
	RCA	**CD74HCT74**	**1149**
	Universal	US74HCT74	
74HCT75	**RCA**	**CD74HCT75**	**1150**
	Universal	US74HCT75	
74HCT76	TI	SN74HC76	
	Universal	US74HCT76	
74HCT85	**RCA**	**CD74HCT85**	**1150**
	Universal	US74HCT85	
74HCT86	**RCA**	**CD74HCT86**	**1149**
	Universal	US74HCT86	
74HCU04	Motorola	MC74HCU04	
	RCA	CD74HCU04	
	SGS	M74HCU04	
74LS00	**Fairchild**	**74LS00**	**5311**
	Hitachi	HD74LS00	
	Motorola	**SN74LS00**	**1122**
	National	DM74LS00	
	Panasonic	DN74LS00	
	SGS	T74LS00	
	TI	SN74LS00	
74LS01	Fairchild	74LS01	
	Hitachi	HD74LS01	
	Motorola	**SN74LS01**	**1122**
	National	DM74LS01	
	Panasonic	DN74LS01	
	TI	SN74LS01	
74LS02	**Fairchild**	**74LS02**	**5311**
	Hitachi	HD74LS02	
	Motorola	**SN74LS02**	**1122**
	National	DM74LS02	
	Panasonic	DN74LS02	
	SGS	T74LS02	
	TI	SN74LS02	
74LS04	**Fairchild**	**74LS04**	**5311**
	Hitachi	HD74LS04	
	Motorola	**SN74LS04**	**1124**
	National	DM74LS04	
	Panasonic	DN74LS04	
	SGS	T74LS04	
	TI	SN74LS04	
74LS05	**Fairchild**	**74LS05**	**5311**
	Hitachi	HD74LS05	
	Motorola	**SN74LS05**	**1124**
	National	DM74LS05	
	Panasonic	DN74LS05	
	SGS	T74LS05	
	TI	SN74LS05	
74LS08	**Fairchild**	**74LS08**	**5311**
	Hitachi	HD74LS08	
	Motorola	**SN74LS08**	**1122**
	National	DM74LS08	
	Panasonic	DN74LS08	
	SGS	T74LS08	
	TI	SN74LS08	
74LS10	**Fairchild**	**74LS10**	**5311**
	Hitachi	HD74LS10	
	Motorola	**SN74LS10**	**1122**
	National	DM74LS10	
	Panasonic	DN74LS10	
	SGS	T74LS10	
	TI	SN74LS10	
74LS109	**Fairchild**	**74LS109**	**5311**
	Hitachi	HD74LS109	
	Motorola	SN74LS109	
74LS109	**Motorola**	**SN74LS109A**	**1126**
	National	DM74LS109	
	Panasonic	DN74LS109	
	SGS	T74LS109	
	TI	SN74LS109A	
74LS11	**Fairchild**	**74LS11**	**5311**
	Hitachi	HD74LS11	
	Motorola	**SN74LS11**	**1122**
	National	DM74LS11	
	Panasonic	DN74LS11	
	SGS	T74LS11	
	TI	SN74LS11	
74LS112	**Fairchild**	**74LS112**	**5311**
	Hitachi	HD74LS112	
	Motorola	**SN74LS112A**	**1126**
	National	DM74LS112	
	Panasonic	DN74LS112	
	SGS	T74LS112	
	TI	SN74LS112A	
74LS113	**Fairchild**	**74LS113**	**5311**
	Hitachi	HD74LS113	
	Motorola	**SN74LS113A**	**1126**
	National	DM74LS113	
	Panasonic	DN74LS113	
	SGS	T74LS113	
	TI	SN74LS113A	
74LS12	Hitachi	HD74LS12	
	Motorola	**SN74LS12**	**1122**
	National	DM74LS12	
	Panasonic	DN74LS12	
	TI	SN74LS12	
74LS125A	Fairchild	74LS125A	
	Motorola	**SN74LS125A**	**1124**
	National	DM74LS125	
	Panasonic	DN74LS125A	
	SGS	T74LS125	
	TI	SN74LS125A	
74LS126A	**Fairchild**	**74LS126**	**5311**
	Motorola	**SN74LS126A**	**1124**
	National	DM74LS126	
	SGS	T74LS126	
	TI	SN74LS126A	
74LS13	**Fairchild**	**74LS13**	**5311**
	Hitachi	HD74LS13	
	Motorola	**SN74LS13**	**1125**
	National	DM74LS13	
	Panasonic	DN74LS13	
	SGS	T74LS13	
	TI	SN74LS13	
74LS132	**Fairchild**	**74LS132**	**5311**
	Hitachi	HD74LS132	
	Motorola	**SN74LS132**	**1125**
	National	DM74LS132	
	Panasonic	DN74LS132	
	SGS	T74LS132	
	TI	SN74LS132	
74LS136	**Fairchild**	**74LS136**	**5311**
	Hitachi	HD74LS136	
	Motorola	**SN74LS136**	**1123**
	National	DM74LS136	
	Panasonic	DN74LS136	
	SGS	T74LS136	
	TI	SN74LS136	
74LS138	**Fairchild**	**74LS138**	**5311**
	Hitachi	HD74LS138	
	Motorola	**SN74LS138**	**1130**
	National	DM74LS138	
	Panasonic	DN74LS138	
	SGS	T74LS138	
	TI	SN74LS138	
74LS139	**Fairchild**	**74LS139**	**5311**
	Hitachi	HD74LS139	
	Motorola	**SN74LS139**	**1130**
	National	DM74LS139	
	Panasonic	DN74LS139	
	SGS	T74LS139	
	TI	SN74LS139A	
74LS14	**Fairchild**	**74LS14**	**5311**
	Hitachi	HD74LS14	
	Motorola	**SN74LS14**	**1125**
	National	DM74LS14	
	Panasonic	DN74LS14	
	TI	SN74LS14	
74LS151	**Fairchild**	**74LS151**	**5311**
	Hitachi	HD74LS151	
		HD74LS151A	
	Motorola	**SN74LS151**	**1129**
	National	DM74LS151	
	Panasonic	DN74LS151	
	SGS	T74LS151	
	TI	SN74LS151	
74LS152	Hitachi	HD74LS152	
74LS153	**Fairchild**	**74LS153**	**5311**
	Hitachi	HD74LS153	
	Motorola	**SN74LS153**	**1129**
	National	DM74LS153	
	Panasonic	DN74LS153	
	SGS	T74LS153	
	TI	SN74LS153	
74LS154	National	DM74LS154	
74LS155	**Fairchild**	**74LS155**	**5311**
	Hitachi	HD74LS155	
	Motorola	**SN74LS155**	**1130**
	National	DM74LS155	
	Panasonic	DN74LS155	
	TI	SN74LS155A	
74LS156	**Fairchild**	**74LS156**	**5311**
	Hitachi	HD74LS156	
	Motorola	**SN74LS156**	**1130**
	National	DM74LS156	
	Panasonic	DN74LS156	
	SGS	T74LS156	
	TI	SN74LS156	
74LS157	**Fairchild**	**74LS157**	**5311**
	Hitachi	HD74LS157	
	Motorola	**SN74LS157**	**1129**
	National	DM74LS157	
	Panasonic	DN74LS157	
	SGS	T74LS157	
	TI	SN74LS157	
74LS158	**Fairchild**	**74LS158**	**5311**
	Hitachi	HD74LS158	
	Motorola	**SN74LS158**	**1129**
	National	DM74LS158	
	Panasonic	DN74LS158	
	SGS	T74LS158	
	TI	SN74LS158	
74LS160	**Fairchild**	**74LS160**	**5311**
	Hitachi	HD74LS160A	
	Motorola	**SN74LS160A**	**1127**
	National	DM74LS160	
	Panasonic	DN74LS160A	
	SGS	T74LS160	
	Signetics	**74LS160A**	**1157**
	TI	SN74LS160A	
74LS160A	**Fairchild**	**74LS160**	**5311**
	Hitachi	HD74LS160A	
	Motorola	**SN74LS160A**	**1127**
	National	DM74LS160	
	Panasonic	DN74LS160A	
	SGS	T74LS160	
	Signetics	74LS160	
	TI	SN74LS160A	
74LS161A	Fairchild	74LS161A	
	Hitachi	HD74LS161A	
	Motorola	**SN74LS161A**	**1127**
	National	DM74LS161	
	Panasonic	DN74LS161A	
	SGS	T74LS161	
	TI	SN74LS161A	
74LS162A	**Fairchild**	**74LS162**	**5311**
	Hitachi	HD74LS162A	
	Motorola	**SN74LS162A**	**1127**
	National	DM74LS162	
	Panasonic	DN74LS162A	
	SGS	T74LS162	
	TI	SN74LS162A	
74LS163A	**Fairchild**	**74LS163**	**5311**
	Hitachi	HD74LS163	
		HD74LS163A	
	Motorola	**SN74LS163A**	**1127**
	National	DM74LS163	
	Panasonic	DN74LS163A	
	SGS	T74LS163	
	TI	SN74LS163A	
74LS164	**Fairchild**	**74LS164**	**5311**
	Hitachi	HD74LS164	
	Motorola	SN74LS164A	
	National	DM74LS164	
	Panasonic	DN74LS164	
	SGS	T74LS164	
	Signetics	74LS164A	
	TI	SN74LS164	
74LS164A	**Fairchild**	**74LS164**	**5311**
	Hitachi	HD74LS164	
	Motorola	SN74LS164A	
	National	DM74LS164	
	Panasonic	DN74LS164	
	SGS	T74LS164	
	Signetics	**74LS164**	**1157**
	TI	SN74LS164	
74LS169A	**Fairchild**	**74LS169**	**5311**
	Hitachi	HD74LS169	
	Motorola	**SN74LS169**	**1127**
74LS169A	National	DM74LS169	
	SGS	T74LS169	
	TI	SN74LS169	
74LS170	**Fairchild**	**74LS170**	**5311**
	Motorola	**SN74LS170**	**1128**
	National	DM74LS170	
	Panasonic	DN74LS170	
	SGS	T74LS170	
	TI	SN74LS170	
74LS173	Fairchild	74LS173	
	Motorola	**SN74LS173A**	**1126**
	National	DM74LS173	
	Panasonic	DN74LS173	
	SGS	T74LS173	
	TI	SN74LS173A	
74LS174	**Fairchild**	**74LS174**	**5311**
	Hitachi	HD74LS174	
	Motorola	**SN74LS174**	**1126**
	National	DM74LS174	
	Panasonic	DN74LS174	
	SGS	T74LS174	
	TI	SN74LS174	
74LS175	**Fairchild**	**74LS175**	**5311**
	Hitachi	HD74LS175	
	Motorola	**SN74LS175**	**1126**
	Panasonic	DN74LS175	
	SGS	T74LS175	
	TI	SN74LS175	
74LS181	**Fairchild**	**74LS181**	**5311**
	Hitachi	HD74LS181	
	Motorola	**SN74LS181**	**1132**
	SGS	T74LS181	
	TI	SN74LS181	
74LS191	Fairchild	74LS191	
	Hitachi	HD74LS191	
	Motorola	**SN74LS191**	**1127**
	National	DM74LS191	
	Panasonic	DN74LS191	
	SGS	T74LS191	
	TI	SN74LS191	
74LS192	**Fairchild**	**74LS192**	**5311**
	Hitachi	HD74LS192	
	Motorola	**SN74LS192**	**1127**
	National	DM74LS192	
	Panasonic	DN74LS192	
	SGS	T74LS192	
	TI	SN74LS192	
74LS193	**Fairchild**	**74LS193**	**5311**
	Hitachi	HD74LS193	
	Motorola	**SN74LS193**	**1127**
	National	DM74LS193	
	Panasonic	DN74LS193	
	SGS	T74LS193	
	TI	SN74LS193	
74LS194A	**Fairchild**	**74LS194A**	**5311**
	Hitachi	HD74LS194A	
	Motorola	**SN74LS194A**	**1128**
	National	DM74LS194	
	Panasonic	DN74LS194A	
	SGS	T74LS194A	
	TI	SN74LS194A	
74LS195A	**Fairchild**	**74LS195A**	**5311**
	Hitachi	HD74LS195A	
	Motorola	**SN74LS195A**	**1128**
	National	DM74LS195	
	Panasonic	DN74LS195A	
	SGS	L7924	
		T74LS195A	
	TI	SN74LS195A	
74LS197	**Fairchild**	**74LS197**	**5311**
	Hitachi	HD74LS197	
	Motorola	**SN74LS197**	**1127**
	National	DM74LS197	
	Panasonic	DN74LS197	
	SGS	T74LS197	
	TI	SN74LS197	
74LS20	**Fairchild**	**74LS20**	**5311**
	Hitachi	HD74LS20	
	Motorola	**SN74LS20**	**1122**
	National	DM74LS20	
	Panasonic	DN74LS20	
	SGS	T74LS20	
	TI	SN74LS20	
74LS21	**Fairchild**	**74LS21**	**5311**
	Hitachi	HD74LS21	
	Motorola	**SN74LS21**	**1122**
	National	DM74LS21	
	Panasonic	DN74LS21	
	SGS	T74LS21	
	TI	SN74LS21	
74LS240	**Fairchild**	**74LS240**	**5311**
	Hitachi	HD74LS240	

(Continued)

◆ Discontinued

The manufacturers report their devices can be used as direct replacements.
Performance details often differ, so compare the specifications considering your requirements.

Signetics (Cont'd)

Manufacturer Device	Replacement Source	Device	IC Master Page
74LS240	MMI	SN74LS240	
	Motorola	**SN74LS240**	1124
	Panasonic	DN74LS240	
	SGS	T74LS240	
	TI	SN74LS240	
74LS241	**Fairchild**	**74LS241**	5311
	Hitachi	HD74LS241	
	MMI	SN74LS241	
	Motorola	**SN74LS241**	1124
	Panasonic	DN74LS241	
	SGS	T74LS241	
	TI	SN74LS241	
74LS242	Fairchild	74LS242A	
	Motorola	**SN74LS242**	1124
	TI	SN74LS242	
74LS243	Fairchild	74LS243A	
	Motorola	**SN74LS243**	1124
	TI	SN74LS243	
74LS244	**Fairchild**	**74LS244**	5311
	Hitachi	HD74LS244	
	MMI	SN74LS244	
	Motorola	**SN74LS244**	1124
	Panasonic	DN74LS244	
	SGS	T74LS244	
	TI	SN74LS244	
74LS251	**Fairchild**	**74LS251**	5311
	Hitachi	HD74LS251	
	Motorola	**SN74LS251**	1129
	National	DM74LS251	
	Panasonic	DN74LS251	
	SGS	T74LS251	
	TI	SN74LS251	
74LS253	**Fairchild**	**74LS253**	5311
	Hitachi	HD74LS253	
	Motorola	**SN74LS253**	1129
	National	DM74LS253	
		DM8214	
	Panasonic	DN74LS253	
	SGS	T74LS253	
	TI	SN74LS253	
74LS256	**Fairchild**	**74LS256**	5311
	Motorola	**SN74LS256**	1126
74LS257	Fairchild	74LS257A	
	Hitachi	HD74LS257	
	Motorola	**SN74LS257A**	1129
	National	DM74LS257	
	SGS	T74LS257	
	Signetics	**74LS257A**	1158
	TI	SN74LS257B	
74LS257A	Fairchild	74LS257A	
	Hitachi	HD74LS257	
	Motorola	**SN74LS257A**	1129
	National	DM74LS257	
	SGS	T74LS257	
	Signetics	74LS257	
	TI	SN74LS257B	
74LS258	Fairchild	74LS258A	
	Hitachi	HD74LS258	
	Motorola	**SN74LS258A**	1129
	National	DM74LS258	
	Panasonic	DN74LS258A	
	SGS	T74LS258	
	TI	SN74LS258B	
74LS259	**Fairchild**	**74LS259**	5311
	Motorola	**SN74LS259**	1126
	SGS	T74LS259	
	TI	SN74LS259B	
74LS26	**Fairchild**	**74LS26**	5311
	Hitachi	HD74LS26	
	Motorola	**SN74LS26**	1122
	National	DM74LS26	
	Panasonic	DN74LS26	
	SGS	T74LS26	
	TI	SN74LS26	
74LS260	**Fairchild**	**74LS260**	5311
	Motorola	**SN74LS260**	1122
74LS266	**Fairchild**	**74LS266**	5311
	Motorola	**SN74LS266**	1123
	National	DM74LS266	
	Panasonic	DN74LS266	
	Raytheon	RC8242	
	SGS	T74LS266	
	Signetics	**N8242**	1175
	TI	SN74LS266	
74LS27	**Fairchild**	**74LS27**	5311
	Hitachi	HD74LS27	
	Motorola	**SN74LS27**	1122
	National	DM74LS27	
	Panasonic	DN74LS27	
74LS27	SGS	T74LS27	
	TI	SN74LS27	
74LS273	**Fairchild**	**74LS273**	5311
	MMI	SN74LS273	
	Motorola	**SN74LS273**	1126
	SGS	T74LS273	
	TI	SN74LS273	
74LS279	**Fairchild**	**74LS279**	5311
	Hitachi	HD74LS279	
	Motorola	**SN74LS279**	1126
	National	DM74LS279	
	Panasonic	DN74LS279	
	SGS	T74LS279	
	TI	SN74LS279A	
74LS283	**Fairchild**	**74LS283**	5311
	Hitachi	HD74LS283	
		HD74LS283A	
	Motorola	**SN74LS283**	1132
	National	DM74LS283	
	Panasonic	DN74LS283	
	SGS	T74LS283	
	TI	SN74LS283	
74LS290	**Fairchild**	**74LS290**	5311
	Hitachi	HD74LS290	
	Motorola	**SN74LS290**	1127
	National	DM74LS290	
	Panasonic	DN74LS290	
	SGS	T74LS290	
	TI	SN74LS290	
74LS293	**Fairchild**	**74LS293**	5311
	Hitachi	HD74LS293	
	Motorola	**SN74LS293**	1127
	National	DM74LS293	
	Panasonic	DN74LS293	
	SGS	T74LS293	
	TI	SN74LS293	
74LS295A	**Fairchild**	**74LS295A**	5311
	Motorola	**SN74LS295A**	1129
	SGS	T74LS295A	
	Signetics	**74LS295B**	1158
	TI	SN74LS295B	
74LS295B	**Fairchild**	**74LS295A**	5311
	Motorola	**SN74LS295A**	1129
	SGS	T74LS295A	
	Signetics	74LS295A	
	TI	SN74LS295B	
74LS298	**Fairchild**	**74LS298**	5311
	Hitachi	HD74LS298	
	Motorola	**SN74LS298**	1129
	SGS	T74LS298	
	TI	SN74LS298	
74LS30	**Fairchild**	**74LS30**	5311
	Hitachi	HD74LS30	
	Motorola	**SN74LS30**	1122
	National	DM74LS30	
	Panasonic	DN74LS30	
	SGS	T74LS30	
	TI	SN74LS30	
74LS33	**Fairchild**	**74LS33**	5311
	Motorola	**SN74LS33**	1122
	Panasonic	DN74LS33	
	SGS	T74LS33	
	TI	SN74LS33	
74LS365	Fairchild	74LS365A	
	Motorola	**SN74LS365A**	1124
	National	DM74LS365	
	Panasonic	DN74LS365A	
	SGS	T74LS365	
		T74LS365A	
	Signetics	**74LS365A**	1158
	TI	SN74LS365A	
74LS365A	Fairchild	74LS365A	
	Motorola	**SN74LS365A**	1124
	National	DM74LS365	
	Panasonic	DN74LS365A	
	SGS	T74LS365	
		T74LS365A	
	Signetics	74LS365	
	TI	SN74LS365A	
74LS366A	Fairchild	74LS366A	
	Motorola	**SN74LS366A**	1124
	National	DM74LS366	
	Panasonic	DN74LS366A	
	SGS	T74LS366	
		T74LS366A	
	TI	SN74LS366A	
74LS367	Fairchild	74LS367A	
	Hitachi	HD74LS367	
		HD74LS367A	
	Motorola	**SN74LS367A**	1124
	National	DM74LS367	
	Panasonic	DN74LS367A	
74LS367	SGS	T74LS367	
		T74LS367A	
	Signetics	**74LS367A**	1158
	TI	SN74LS367A	
74LS367A	Fairchild	74LS367A	
	Hitachi	HD74LS367	
		HD74LS367A	
	Motorola	**SN74LS367A**	1124
	National	DM74LS367	
	Panasonic	DN74LS367A	
	SGS	T74LS367	
		T74LS367A	
	Signetics	74LS367	
	TI	SN74LS367A	
74LS368	Fairchild	74LS368A	
	Hitachi	HD74LS368	
	Motorola	**SN74LS368A**	1124
	National	DM74LS368	
	Panasonic	DN74LS368A	
	SGS	T74LS368	
	Signetics	**74LS368A**	1158
	TI	SN74LS368A	
74LS368A	Fairchild	74LS368A	
	Hitachi	HD74LS368	
	Motorola	**SN74LS368A**	1124
	National	DM74LS368	
	Panasonic	DN74LS368A	
	SGS	T74LS368	
	Signetics	74LS368	
	TI	SN74LS368A	
74LS37	**Fairchild**	**74LS37**	5311
	Hitachi	HD74LS37	
	Motorola	**SN74LS37**	1122
	National	DM74LS37	
	Panasonic	DN74LS37	
	SGS	T74LS37	
	TI	SN74LS37	
74LS373	**Fairchild**	**74LS373**	5311
	MMI	SN74LS373	
	Motorola	**SN74LS373**	1126
	Panasonic	DN74LS373	
	SGS	T74LS373	
	TI	SN74LS373	
74LS374	**Fairchild**	**74LS374**	5311
	MMI	SN74LS374	
	Motorola	**SN74LS374**	1126
	National	DM74LS374	
	SGS	T74LS374	
	TI	SN74LS374	
74LS375	**Fairchild**	**74LS375**	5311
	Motorola	**SN74LS375**	1126
	TI	SN74LS375	
74LS377	**Fairchild**	**74LS377**	5311
	MMI	SN74LS377	
	Motorola	**SN74LS377**	1126
	SGS	T74LS377	
	TI	SN74LS377	
74LS378	AMD	SN74LS378	
	Fairchild	**74LS378**	5311
	Motorola	**SN74LS378**	1126
	SGS	T74LS378	
	TI	SN74LS378	
74LS38	**Fairchild**	**74LS38**	5311
	Hitachi	HD74LS38	
	Motorola	**SN74LS38**	1122
	National	DM74LS38	
	Panasonic	DN74LS38	
	SGS	T74LS38	
	TI	SN74LS38	
74LS393	**Fairchild**	**74LS393**	5311
	Motorola	**SN74LS393**	1127
	Panasonic	DN74LS393	
	SGS	T74LS393	
	TI	SN74LS393	
74LS395	**Fairchild**	**74LS395**	5311
	National	DM74LS395	
	Panasonic	DN74LS395A	
	SGS	T74LS395	
	TI	SN74LS395A	
74LS40	**Fairchild**	**74LS40**	5311
	Hitachi	HD74LS40	
	Motorola	**SN74LS40**	1122
	National	DM74LS40	
	Panasonic	DN74LS40	
	SGS	T74LS40	
	TI	SN74LS40	
74LS42	**Fairchild**	**74LS42**	5311
	Hitachi	HD74LS42	
	Motorola	**SN74LS42**	1130
	National	DM74LS42	
	Panasonic	DN74LS42	
74LS42	SGS	T74LS42	
	TI	SN74LS42	
74LS48	**Fairchild**	**74LS48**	5311
	Hitachi	HD74LS48	
	Motorola	**SN74LS48**	1130
	National	DM74LS48	
	SGS	T74LS48	
	TI	SN74LS48	
74LS490	**Fairchild**	**74LS490**	5311
	Motorola	**SN74LS490**	1127
	Panasonic	DN74LS490	
	SGS	T74LS490	
	TI	SN74LS490	
74LS51	**Fairchild**	**74LS51**	5311
	Hitachi	HD74LS51	
	Motorola	**SN74LS51**	1123
	National	DM74LS51	
	Panasonic	DN74LS51	
	SGS	T74LS51	
	TI	SN74LS51	
74LS54	**Fairchild**	**74LS54**	5311
	Hitachi	HD74LS54	
	Motorola	**SN74LS54**	1123
	National	DM74LS54	
	Panasonic	DN74LS54	
	SGS	T74LS54	
	TI	SN74LS54	
74LS540	**Fairchild**	**74LS540**	5311
	Motorola	**SN74LS540**	1125
	TI	SN74LS540	
74LS541	Fairchild	74LS541	
	Motorola	**SN74LS541**	1125
	TI	SN74LS541	
74LS568	AMD	SN74LS568	
	Motorola	**SN74LS568**	1127
74LS569	AMD	SN74LS569	
	Motorola	**SN74LS569**	1127
74LS640	**Motorola**	**SN74LS640**	1125
	Signetics	**N8T125**	1175
	TI	SN74LS640	
74LS641	**Motorola**	**SN74LS641**	1125
	TI	SN74LS641	
74LS642	**Motorola**	**SN74LS642**	1125
	TI	SN74LS642	
74LS645	MMI	SN74LS645	
	Motorola	**SN74LS645**	1125
	TI	SN74LS645	
74LS670	**Fairchild**	**74LS670**	5311
	Motorola	**SN74LS670**	1128
	National	DM74LS670	
	SGS	T74LS670	
	TI	SN74LS670	
74LS73	Hitachi	HD74LS73	
	Motorola	**SN74LS73A**	1126
	National	DM74LS73	
	Panasonic	DN74LS73	
	TI	SN74LS73A	
74LS74	**Fairchild**	**74LS74**	5311
	Hitachi	HD74LS74	
		HD74LS74A	
	Motorola	**SN74LS74A**	1126
	National	DM74LS74	
	Panasonic	DN74LS74A	
	SGS	T74LS74	
	TI	SN74LS74A	
74LS75	Hitachi	HD74LS75	
	Motorola	**SN74LS75**	1126
	National	DM74LS75	
	Panasonic	DN74LS75	
	TI	SN74LS75	
74LS76	Hitachi	HD74LS76	
	Motorola	**SN74LS76A**	1126
	National	DM74LS76	
	Panasonic	DN74LS76	
	TI	SN74LS76A	
74LS83	Fairchild	74LS83A	
	Hitachi	HD74LS183A	
		HD74LS83A	
	Motorola	**SN74LS83A**	1132
	National	DM74LS83A	
	Panasonic	DN74LS83A	
	SGS	T74LS83	
	Signetics	**74LS83A**	1156
	TI	SN74LS83A	
74LS83A	Fairchild	74LS83A	
	Hitachi	HD74LS183A	
		HD74LS83A	
	Motorola	**SN74LS83A**	1132
	National	DM74LS83A	
	Panasonic	DN74LS83A	
	SGS	T74LS83	

(Continued)

◆ Discontinued

Bold face device numbers indicate manufacturers data is provided in the IC Master on the pages noted.

Signetics (Cont'd)

Manufacturer Device	Replacement Source	Device	IC Master Page
74LS83A	Signetics	74LS83	
	TI	SN74LS83A	
74LS85	**Fairchild**	**74LS85**	**5311**
	Hitachi	HD74LS85	
	Motorola	**SN74LS85**	**1131**
	National	DM74LS85	
	Panasonic	DN74LS85	
	TI	SN74LS85	
74LS86	**Fairchild**	**74LS86**	**5311**
	Hitachi	HD74LS86	
	Motorola	**SN74LS86**	**1123**
	National	DM74LS86	
	Panasonic	DN74LS86	
	SGS	T74LS86	
	TI	SN74LS86A	
74LS90	**Fairchild**	**74LS90**	**5311**
	Motorola	**SN74LS90**	**1127**
	National	DM74LS90	
	Panasonic	DN74LS90	
	SGS	T74LS90	
	TI	SN74LS90	
74LS92	**Fairchild**	**74LS92**	**5311**
	Hitachi	HD74LS92	
	Motorola	**SN74LS92**	**1127**
	National	DM74LS92	
	Panasonic	DN74LS92	
	SGS	T74LS92	
	TI	SN74LS92	
74LS93	**Fairchild**	**74LS93**	**5311**
	Hitachi	HD74LS93	
	Motorola	**SN74LS93**	**1127**
	National	DM74LS93	
	Panasonic	DN74LS93	
	SGS	T74LS93	
	TI	SN74LS93	
74LS95B	**Fairchild**	**74LS95B**	**5311**
	Hitachi	HD74LS95B	
	Motorola	**SN74LS95B**	**1128**
	National	DM74LS95B	
	Panasonic	DN74LS95B	
	SGS	T74LS95	
		T74LS95B	
	TI	SN74LS95B	
74LS96	TI	SN74LS96	
74S00	Fairchild	74S00	
	National	DM74S00	
	TI	SN74S00	
74S02	Fairchild	74S02	
	National	DM74S02	
	TI	SN74S02	
		SN74S32	
74S03	Fairchild	74S03	
	National	DM74S03	
	TI	SN74S03	
74S04	Fairchild	74S04	
	National	DM74S04	
	TI	SN74S04	
74S05	Fairchild	74S05	
	National	DM74S05	
	TI	SN74S05	
74S08	Fairchild	74S08	
	TI	SN74S08	
74S10	Fairchild	74S10	
	National	DM74S10	
	TI	SN74S10	
74S11	Fairchild	74S11	
	National	DM74S11	
	TI	SN74S11	
74S112	Fairchild	74S112	
	Motorola	SN74S112	
	National	DM74S112	
	TI	SN74S112	
74S113	Fairchild	74S113	
	National	DM74S113	
	TI	SN74S113	
74S133	Fairchild	74S133	
	National	DM74S133	
	TI	SN74S133	
74S134	National	DM74S134	
	TI	SN74S134	
74S135	Fairchild	74S135	
	National	DM74S135	
	TI	SN74S135	
74S138	AMD	SN74S138	
	Fairchild	74S138	
	National	DM74S138	
	TI	SN74S138	
74S140	Fairchild	74S140	
	National	DM74S140	
	TI	SN74S140	
74S168	TI	SN74S168	
74S169	TI	SN74S169	
74S182	Fairchild	74S182	
	MMI	SN74S182	
	National	DM74S182	
	TI	SN74S182	
◆74S189	AMD	AM27LS03	
		AM27S03	
		SN74S189	
	Cypress	CY27S03	
		CY74S189	
		CY7C189	
		CY7CS189	
	Fairchild	74S189	
		93405	
	National	DM74S189	
		DM7599	
		DM8599	
	TI	SN74S189B	
74S196	TI	SN74S196	
74S197	TI	SN74S197	
74S20	Fairchild	74S20	
	National	DM74S20	
	TI	SN74S20	
74S251	AMD	SN74S251	
	National	DM74S251	
	TI	SN74S251	
74S280	National	DM74S280	
	TI	SN74S280	
74S289	Fairchild	7489	
	National	DM7489	
		DM74S289	
		DM8589	
		MM74S289	
	Signetics	N82S25	
	TI	SN74S289B	
74S32	Fairchild	74S32	
74S37	TI	SN74S37	
74S373	MMI	SN74S373	
	TI	SN74S373	
74S374	MMI	SN74S374	
	TI	SN74S374	
74S40	Fairchild	74S40	
	National	DM74S40	
	TI	SN74S40	
74S51	Fairchild	74S51	
	National	DM74S51	
	TI	SN74S51	
74S74	Fairchild	74S74	
	Hitachi	HD74S74	
	National	DM74S74	
	TI	SN74S74	
74S85	TI	SN74S85	
74S86	Fairchild	74S86	
	National	DM74S86	
	TI	SN74S86	
7524	Fairchild	75S24	
	Motorola	MC7524	
	National	DS75S24	
	TI	SN75224	
		SN7524	
825147	AMD	27S29	
		LF157A	
	Fairchild	LF157A	
	Harris	7649	
	MMI	5349-1	
		6349-1	
	National	545472	
		74S472	
		LF157A	
	PMI	PM157A	
	Raytheon	**29621**	**4134**
	TI	28S42	
82641	AMD	27S49	
		AM27S49	
	Cypress	CY7C264	
	Fairchild	32Z565	
		93565	
	Fujitsu	7144H	
		MB7144	
	Harris	76641	
	Raytheon	**29VP864**	**4137**
82PS181	AMD	27PS181	
	Raytheon	29633	
	TI	28P86	
82S181	AMD	AM27S181M	
	Cypress	CY7C282M	
	Fairchild	932451	
		93451	
	Fujitsu	MB7132	
	Harris	7681	
	Hitachi	HN25089	
	MMI	5381-1	
		6381	**4102**
		6381-1	
	Motorola	**MCM7681**	**4124**
	National	DM77S181	
		DM77S281	
		DM87S281	
	Raytheon	29631AM	
		29632	
	Signetics	NS82HS195	
		S82HS181	
		S82S181	
	TI	28S86	
		TBP28S86AM	
82S185	AMD	27S185	
		AM27S185	
	Fujitsu	MB7128	
	Hitachi	HN25085	
	MMI	5389	
		6389	**4102**
		6389-1	
		63S841	**4101,4102**
	Motorola	**MCM7685**	**4124**
	National	77S185	
		87S185	
		DM87S185	
	Raytheon	29651	
		29651A	**4134**
	Signetics	N82HS185	
		N82S185	**4166**
	TI	24S81	
		TBP24S81	
82S191	AMD	27S191	
		AM27S191	
	Fairchild	932511	
	Fujitsu	MB7138	
	Harris	76161	
		HM76161	
	Hitachi	HN25169	
	MMI	**63S1681**	**4101,4103**
	Motorola	MCM76101	
	National	77S191	
		87S191	
		DM87S191	
	Raytheon	**29681**	**4134**
	Signetics	**N82S191**	**4167**
	TI	28S166	
		TBP28S166	
82S321	AMD	27S43	
		AM27S43	
	Fujitsu	MB7142	
	MMI	**53S3281**	**691,4101**
		63S3281	**4101,4103**
	National	77S321	
		87S321	
		DM87S321	
	Raytheon	**29671**	**4134**
	Signetics	**N82S321**	**4167**
9401	Fairchild	F9401	
	Motorola	MC8503	
9403	Fairchild	F9403	
◆CA3081	**RCA**	**CA3081**	**3678**
	Sprague	ULN-2081	
◆CA3082	**RCA**	**CA3082**	**3678**
	Sprague	ULN-2082	
◆CA3083	**RCA**	**CA3083**	**3678**
		CA3183	**3678**
	SiliconG	SG3083	
		SG3183	
	Sprague	ULN-2083	
◆CA3183	**RCA**	**CA3083**	**3678**
		CA3183	**3678**
	SiliconG	SG3083	
		SG3183	
	Sprague	ULN-2083	
◆CA3189	SGS	TCA3189	
◆DS8820	National	DS8820	
		DS8880	
	TI	DS8820	
		SN75182	
		SN75480	
◆DS8830	National	DS8830	
	TI	DS8830	
		SN75183	
◆DS8880	National	DS8820	
		DS8880	
	TI	DS8820	
		SN75182	
		SN75480	
GBX100422	**Fairchild**	**F100422**	**4014**
	Fujitsu	MB8118	
		MBM100422	
		MBM100422A	
	Hitachi	HM100422	
		HM4816	
	Intel	2118	
	Mostek	MK4516	
	Motorola	MCM4517	
	National	DM100422	
		NMC5295	
	NEC	UPB100422	
	Signetics	100422	
GBX100470	AMD	AM100470	
	Fujitsu	MBM100470A	
	NEC	UPB100470	
	Signetics	100470	
HEF400	Motorola	MC14000	
	National	CD4000	
	RCA	CD4000	
	SGS	HCC/HCF4000	
	Solitron	CM4000	
	SSS	SCL4000	
HEF4001	Fairchild	F4001	
	Motorola	MC14001	
	National	CD4001	
		MM74C02	
	OKI	MSM4001	
	RCA	CD4001	
	Sanyo	LC4001B	
	SGS	HCC/HCF4001	
	Solitron	CM4001	
	SSS	SCL4001	
	Toshiba	TC4001	
HEF4002	Fairchild	F4002	
	Motorola	MC14002	
	National	CD4002	
	RCA	CD4002	
	SGS	HCC/HCF4002	
	Solitron	CM4002	
	SSS	SCL4002	
	Toshiba	TC4002	
HEF4006	Fairchild	F4006	
	National	CD4006	
	RCA	CD4006	
	SGS	HCC/HCF4006	
	Solitron	CM4006	
	SSS	SCL4006	
	Toshiba	TC4006	
HEF4007	Fairchild	F4007	
	Motorola	MC14007	
	National	CD4007	
	RCA	CD4007	
	SGS	HCC/HCF4007	
	Solitron	CM4007	
	SSS	SCL4007	
	Toshiba	TC4007	
HEF4008	Fairchild	F4008	
	Motorola	MC14008	
	National	CD4008	
		MM74C83	
	RCA	CD4008	
	SGS	HCC/HCF4008	
	Solitron	CM4008	
	SSS	SCL4008	
	Toshiba	TC4008	
◆HEF40098	Fairchild	F40098	
	National	MM80C98	
HEF40106	Fairchild	F40014	
	Motorola	MC14584	
	National	CD40106	
		CD4584	
		MM54C14	
		MM74C14	
	RCA	CD40106	
	SGS	HCC/HCF40106	
	SSS	SCL4584	
HEF4011	Fairchild	F4011	
	Motorola	MC14011	
	National	CD4011	
		MM74C00	
	OKI	MSM4011	
	RCA	CD4011	
	Sanyo	LC4011	
	SGS	HCC/HCF4011	
	Solitron	CM4011	
	SSS	SCL4011	
	Toshiba	TC4011	
HEF4012	Fairchild	F4012	
	Motorola	MC14012	
	National	CD4012	
	RCA	CD4012	

(Continued)

◆ Discontinued

The manufacturers report their devices can be used as direct replacements.
Performance details often differ, so compare the specifications considering your requirements.

Signetics (Cont'd)

Manufacturer Device	Replacement Source	Device	IC Master Page
HEF4012	SGS	HCC/HCF4012	
	Solitron	CM4012	
	SSS	SCL4012	
	Toshiba	TC4012	
HEF4013	Fairchild	F4013	
	Motorola	MC14013	
	National	CD4013	
		MM74C74	
	OKI	MSM4013	
	RCA	CD4013	
	Sanyo	LC4013	
	SGS	HCC/HCF4013	
	Solitron	CM4013	
	SSS	SCL4013	
	Toshiba	TC4013	
HEF4014	Fairchild	F4014	
	Motorola	MC14014	
	National	CD4014	
	RCA	CD4014	
	SGS	HCC/HCF4014	
	Solitron	CM4014	
	SSS	SCL4014	
	Toshiba	TC4014	
HEF4015	Fairchild	F4015	
	Motorola	MC14015	
	National	CD4015	
		MM74C164	
	OKI	MSM4015	
	RCA	CD4015	
	Sanyo	LC4015	
	SGS	HCC/HCF4015	
	Solitron	CM4015	
	SSS	SCL4015	
	Toshiba	TC4015	
HEF4016	Fairchild	F4016	
		F4066	
	Motorola	MC14016	
		MC14066	
	National	CD4016	
		CD4066	
	RCA	CD4016	
		CD4066	
	Sanyo	LC4016	
		LC4066	
	SGS	HCC/HCF4016	
		HCC/HCF4066	
	Signetics	HEF4066	
	Solitron	CM4016	
		CM4066	
		HCF4016	
	SSS	SCL4016	
		SCL4066	
	Toshiba	TC4016	
		TC4066	
HEF4017	Fairchild	F4017	
	Motorola	MC14017	
	National	CD4017	
	RCA	CD4017	
	SGS	HCC/HCF4017	
	Solitron	CM4017	
	SSS	SCL4017	
	Toshiba	TC4017	
HEF40175	Fairchild	F40175	
	Motorola	MC14175	
	National	CD40175	
		MM54C175	
		MM74C175	
	Toshiba	TC40175	
HEF4018	Fairchild	F4018	
	Motorola	MC14018	
	National	CD4018	
	RCA	CD4018	
	SGS	HCC/HCF4018	
	Solitron	CM4018	
	SSS	SCL4018	
	Toshiba	TC4018	
HEF4019	Fairchild	F4019	
	National	CD4019	
	OKI	MSM4019	
	RCA	CD4019	
	Sanyo	LC4019	
	SGS	HCC/HCF4019	
	Solitron	CM4019	
	SSS	SCL4019	
	Toshiba	TC4019	
HEF40192	Fairchild	F4029	
	Motorola	MC14029	
	National	CD40192	
		CD4029	
	RCA	CD40192	
		(Continued)	
HEF40192	RCA	CD4029	
	SGS	HCC/HCF40192	
		HCC/HCF4029	
	Solitron	CM4029	
	SSS	SCL4029	
		SCL4192	
	Toshiba	TC40192	
		TC4029	
HEF40193	Fairchild	F40193	
	National	CD40193	
		MM54C193	
		MM74C193	
	RCA	CD40193	
	SGS	HCC/HCF40193	
	SSS	SCL4193	
	Toshiba	**TC40193**	**1363**
HEF40194	Fairchild	F40194	
	Motorola	MC14194	
	RCA	CD40194	
	SGS	HCC/HCF40194	
HEF4020	Fairchild	F4020	
	Motorola	MC14020	
	National	CD4020	
	RCA	CD4020	
	SGS	HCC/HCF4020	
	Solitron	CM4020	
	SSS	SCL4020	
	Toshiba	TC4020	
HEF4021	Fairchild	F4021	
	Motorola	MC14021	
	National	CD4021	
	RCA	CD4021	
	SGS	HCC/HCF4021	
	SSS	SCL4021	
	Toshiba	TC4021	
HEF4022	Fairchild	F4022	
	Motorola	MC14022	
	National	CD4022	
	RCA	CD4022	
	SGS	HCC/HCF4022	
	Solitron	CM4022	
	SSS	SCL4022	
	Toshiba	TC4022	
HEF4023	Fairchild	F4023	
	Motorola	MC14023	
	National	CD4023	
		MM74C10	
	RCA	CD4023	
	SGS	HCC/HCF4023	
	Solitron	CM4023	
	SSS	SCL4023	
	Toshiba	TC4023	
HEF4024	Fairchild	F4024	
	Motorola	MC14024	
	National	CD4024	
	RCA	CD4024	
	SGS	HCC/HCF4024	
	Solitron	CM4024	
	SSS	SCL4024	
	Toshiba	TC4024	
HEF4025	Fairchild	F4025	
	Motorola	MC14025	
	National	CD4025	
	RCA	CD4025	
	SGS	HCC/HCF4025	
	Solitron	CM4025	
	SSS	SCL4025	
	Toshiba	TC4025	
HEF4027	Fairchild	F4027	
	Motorola	MC14027	
	National	CD4027	
		MM74C76	
	OKI	MSM4027	
	RCA	CD4027	
	Sanyo	LC4027	
	SGS	HCC/HCF4027	
	Solitron	CM4027	
	SSS	SCL4027	
HEF4028	Fairchild	F4028	
	Motorola	MC14028	
	National	CD4028	
		MM74C42	
	OKI	MSM4028	
	RCA	CD4028	
	Sanyo	LC4028	
	SGS	HCC/HCF4028	
	Solitron	CM4028	
	SSS	SCL4028	
	Toshiba	TC4028	
HEF4030	Fairchild	F4030	
	National	CD4030	
	RCA	CD4030	
		(Continued)	
HEF4030	SGS	HCC/HCF4030	
	Solitron	CM4030	
	SSS	SCL4030	
	Toshiba	TC4030	
HEF4035	Fairchild	F4035	
	Motorola	MC14035	
	RCA	CD4035	
	SGS	HCC/HCF4035	
	Solitron	CM4035	
	Toshiba	TC4035	
HEF4040	Fairchild	F4040	
	Motorola	MC14040	
	National	CD4040	
	RCA	CD4040	
	SGS	HCC/HCF4040	
	Solitron	CM4040	
	SSS	SCL4040	
	Toshiba	TC4040	
HEF4041	Fairchild	F4041	
	National	CD4041	
	RCA	CD4041	
	SGS	HCC/HCF4041	
	Solitron	CM4041	
	SSS	SCL4041	
HEF4042	Fairchild	F4042	
	Motorola	MC14042	
	National	CD4042	
	RCA	CD4042	
	SGS	HCC/HCF4042	
	Solitron	CM4042	
	SSS	SCL4042	
	Toshiba	TC4042	
HEF4043	Motorola	MC14043	
	National	CD4043	
	RCA	CD4043	
	SGS	HCC/HCF4043	
	Solitron	CM4043	
	SSS	SCL4043	
	Toshiba	TC4043	
HEF4044	Fairchild	F4044	
	Motorola	MC14044	
	National	CD4044	
	RCA	CD4044	
	SGS	HCC/HCF4044	
	Solitron	CM4044	
	Toshiba	TC4044	
HEF4047	Fairchild	F4047	
	National	CD4047	
	RCA	CD4047	
	SGS	HCC/HCF4047	
	Solitron	CM4047	
	SSS	SCL4047	
	Toshiba	TC4047	
HEF4049	Fairchild	F4049	
	Motorola	MC14049	
	National	CD4049	
	OKI	MSM4049	
	RCA	CD4049	
	Sanyo	LC4049	
	SGS	HCC/HCF4049	
	Solitron	CM4049	
	SSS	SCL4049	
	Toshiba	TC4049	
HEF4050	Fairchild	F4050	
	Motorola	MC14050	
	National	CD4050	
	RCA	CD4050	
	SGS	HCC/HCF4050	
	Solitron	CM4050	
	SSS	SCL4050	
	Toshiba	TC4050	
HEF4051	Fairchild	F4051	
	Motorola	MC14051	
	National	CD4051	
	RCA	CD4051	
	SGS	HCC/HCF4051	
	Solitron	CM4051	
	SSS	SCL4051	
	Toshiba	TC4051	
HEF4052	Fairchild	F4052	
	Motorola	MC14052	
	RCA	CD4052	
	SGS	HCC/HCF4052	
HEF4053	Fairchild	F4053	
	Motorola	MC14053	
	National	CD4053	
	RCA	CD4053	
	SGS	HCC/HCF4053	
	Solitron	CM4053	
	SSS	SCL4053	
	Toshiba	**TC4053B**	**1363**
HEF4059	Motorola	MC14569	
	RCA	CD4059	
HEF4060	Motorola	MC14060	
	National	CD4060	
	RCA	CD4060	
	SGS	HCC/HCF4060	
	SSS	SCL4060	
HEF4066	Fairchild	F4016	
		F4066	
	Motorola	MC14016	
		MC14066	
	National	CD4016	
		CD4066	
	RCA	CD4016	
		CD4066	
	Sanyo	LC4016	
		LC4066	
	SGS	HCC/HCF4016	
		HCC/HCF4066	
	Signetics	HEF4016	
	Solitron	CM4016	
		CM4066	
		HCF4016	
	SSS	SCL4016	
		SCL4066	
	Toshiba	TC4016	
		TC4066	
HEF4067	Fairchild	F4067	
	Motorola	MC14067	
	RCA	CD4067	
	SGS	HCC/HCF4067	
HEF4068	Fairchild	F4068	
	Motorola	MC14068	
	RCA	CD4068	
	SGS	HCC/HCF4068	
	Solitron	CM4068	
	SSS	SCL4068	
	Toshiba	TC4068	
HEF4069	Fairchild	F4069	
	Motorola	MC14069	
	National	CD4069	
		MM54C04	
		MM74C04	
	OKI	MSM4069	
	RCA	CD4069	
	Sanyo	LC4069	
	SGS	HCC/HCF4069	
	Solitron	CM4069	
	SSS	SCL4069	
		SCL4449	
	Toshiba	TC4069	
HEF4070	Fairchild	F4070	
	Motorola	MC14070	
	National	CD4070	
		MM74C86	
	RCA	CD4070	
	SGS	HCC/HCF4070	
	Solitron	CM4070	
	SSS	SCL4070	
HEF4071	Fairchild	F4071	
	Motorola	MC14071	
	National	CD4071	
		MM74C32	
	OKI	MSM4071	
	RCA	CD4071	
	Sanyo	LC4071	
	SGS	HCC/HCF4071	
	Solitron	CM4071	
	SSS	SCL4071	
	Toshiba	TC4071	
HEF4072	Fairchild	F4072	
	Motorola	MC14072	
	National	CD4072	
	RCA	CD4072	
	SGS	HCC/HCF4072	
	SSS	SCL4072	
	Toshiba	TC4072	
HEF4073	Fairchild	F4073	
	Motorola	MC14073	
	National	CD4073	
	RCA	CD4073	
	SGS	HCC/HCF4073	
	Solitron	CM4073	
	SSS	SCL4073	
	Toshiba	TC4073	
HEF4075	Fairchild	F4075	
	Motorola	MC14075	
	National	CD4075	
	RCA	CD4075	
	SGS	HCC/HCF4075	
	Solitron	CM4075	
		(Continued)	

◆ Discontinued

Bold face device numbers indicate manufacturers data is provided in the IC Master on the pages noted.

Manufacturer Device	Replacement Source	Device	IC Master Page
Signetics (Cont'd)			
HEF4075	SSS	SCL4075	
	Toshiba	TC4075	
HEF4076	Fairchild	F4076	
	Motorola	MC14076	
	National	CD4076	
		MM54C173	
		MM74C173	
	RCA	CD4076	
	SGS	HCC/HCF4076	
	Solitron	CM4076	
	SSS	SCL4076	
	Toshiba	TC4076	
HEF4077	Fairchild	F4077	
	Motorola	MC14077	
	National	CD4077	
	RCA	CD4077	
	SGS	HCC/HCF4077	
	Solitron	CM4077	
	SSS	SCL4077	
HEF4078	Fairchild	F4078	
	Motorola	MC14078	
	RCA	CD4078	
	SGS	HCC/HCF4078	
	Solitron	CM4078	
	SSS	SCL4078	
	Toshiba	TC4078	
HEF4081	Fairchild	F4081	
	Motorola	MC14081	
	National	CD4081	
		MM74C08	
	OKI	MSM4081	
	RCA	CD4081	
	Sanyo	LC4081	
	SGS	HCC/HCF4081	
	Solitron	CM4081	
	SSS	SCL4081	
	Toshiba	TC4081	
HEF4082	Fairchild	F4082	
	Motorola	MC14082	
	National	CD4082	
	RCA	CD4082	
	SGS	HCC/HCF4082	
	SSS	SCL4082	
	Toshiba	TC4082	
HEF4086B	Motorola	MC14506B	
	RCA	**CD4086B**	**704,1145**
	SGS	HCC/HCF4086	
	SSS	SCL4086B	
HEF4502	Motorola	MC14502	
	RCA	CD4502	
	SGS	HCC/HCF4502	
	SSS	SCL4502	
HEF4505	Motorola	MC14505	
HEF4508	Motorola	MC14508	
	National	DM74147	
	RCA	CD4508	
	SGS	HCC/HCF4508	
	Signetics	**74147**	**1157**
		N82147	
	Solitron	CM4508	
	SSS	SCL4508	
	TI	SN74147	
	Toshiba	TC4508	
HEF4510	Fairchild	F4510	
	Motorola	MC14510	
	National	CD4510	
	RCA	CD4510	
	SGS	HCC/HCF4510	
	Solitron	CM4510	
	SSS	SCL4510	
	Toshiba	TC4510	
HEF4511	Fairchild	F4511	
	Mitel	MD4511	
	MMI	4511	
	Motorola	MC14511	
	National	CD4511	
	NEC	μPD4511	
	RCA	CD4511	
	SGS	HCC/HCF4511	
	Solitron	CM4511	
	SSS	SCL4511	
	Toshiba	TC4511	
HEF4514	Fairchild	F4514	
	Motorola	MC14514	
	National	CD4514	
	RCA	CD4514	
	SGS	HCC/HCF4514	
	Solitron	CM4514	
	SSS	SCL4514	
	Toshiba	TC4514	
HEF4515	Fairchild	F4515	
	Motorola	MC14515	
	National	CD4515	
	RCA	CD4515	
	SGS	HCC/HCF4515	
	Solitron	CM4515	
	SSS	SCL4515	
	Toshiba	TC4515	
HEF4516	Fairchild	F4516	
	Motorola	MC14516	
	National	CD4516	
	RCA	CD4516	
	SGS	HCC/HCF4516	
	Solitron	CM4516	
	SSS	SCL4516	
	Toshiba	TC4516	
HEF4517	Motorola	MC14517	
	RCA	CD4517	
	SGS	HCC/HCF4517	
	SSS	SCL4517	
HEF4518	Fairchild	F4518	
	Motorola	MC14518	
	National	CD4518	
	RCA	CD4518	
	SGS	HCC/HCF4518	
	Solitron	CM4518	
	SSS	SCL4518	
	Toshiba	TC4518	
HEF4519	Hitachi	HD4519	
	Motorola	MC14519	
	National	CD4519	
	RCA	CD4519	
HEF4520	Fairchild	F4520	
	Motorola	MC14520	
	National	CD4520	
	OKI	MSM4520	
	RCA	CD4520	
	Sanyo	LC4520	
	SGS	HCC/HCF4520	
	Solitron	CM4520	
	SSS	SCL4520	
	Toshiba	TC4520	
HEF4521	Fairchild	F4521	
	Motorola	MC14521	
	RCA	CD4045	
	SGS	HCC/HCF4045	
	Solitron	CM4045	
	SSS	SCL4445	
	Toshiba	TC4521	
HEF4526	Fairchild	F4526	
	Motorola	MC14526	
	National	CD4526	
	SSS	SCL4526	
	Toshiba	TC4526	
HEF4527	Fairchild	F4527	
	Motorola	MC14527	
	National	CD4527	
	RCA	CD4527	
	SGS	HCC/HCF4527	
	SSS	SCL4527	
	Toshiba	TC4527	
HEF4528	Fairchild	F4528	
	Motorola	MC14528	
	National	CD4528	
		MM74C221	
	RCA	CD4098	
	SGS	HCC/HCF4098	
	SSS	SCL4528	
	Toshiba	TC4528	
HEF4531	Fairchild	F4531	
	Motorola	MC14531	
	RCA	CD40101	
	SGS	HCC/HCF40101	
	SSS	SCL4531	
	Toshiba	TC4531	
HEF4532	Fairchild	F4532	
	Motorola	MC14532	
	RCA	CD4532	
	SGS	HCC/HCF4532	
	SSS	SCL4532	
	Toshiba	TC4532	
HEF4534	Motorola	MC14534	
HEF4538	Motorola	MC14538	
	National	CD4538	
	OKI	MSM4538	
HEF4539	Fairchild	F4539	
	Motorola	MC14539	
	Toshiba	TC4539	
HEF4543	Fairchild	F4543	
	Motorola	MC14543	
		MC14543B	
	National	CD4543	
			(Continued)
HEF4543	RCA	CD4543	
	SSS	SCL4S43B	
	Toshiba	TC4543	
HEF4555	Fairchild	F4555	
	Motorola	MC14555	
	RCA	CD4555	
	SGS	HCC/HCF4555	
	SSS	SCL4555	
	Toshiba	TC4555	
HEF4556	Fairchild	F4556	
	Motorola	MC14556	
	RCA	CD4556	
	SGS	HCC/HCF4556	
	SSS	SCL4556	
	Toshiba	TC4556	
HEF4557	Fairchild	F4557	
	Motorola	MC14557	
HEF4585	Fairchild	F40085	
	Motorola	MC14585	
	National	MM74C85	
	RCA	CD4585	
	SGS	HCC/HCF4585	
	SSS	SCL4585	
	Toshiba	TC4585	
HEF4591	Motorola	MC14541B	
	RCA	CD4541	
HEF4720	Fairchild	F4720	
HEF4724	Fairchild	F4727	
HEF4731	Fairchild	F4031	
	National	CD4031	
	RCA	CD4031	
	SGS	HCC/HCF4031	
INS2652	National	INS2652	
ISP-8A/600	National	INS8060	
		ISP-8A/600	
LF198	AMD	LF198	
	LinearTech	LF198	
	National	LF198	
◆LF355	LinearTech	LF355	
	Motorola	**LF355**	**3616**
	National	LF355	
	PMI	PM355	
	ThomsonCSF	LF355	
◆LF356	LinearTech	LF356	
	Motorola	**LF356**	**3616**
	National	LF356	
	PMI	PM356	
	ThomsonCSF	LF356	
LF398	LinearTech	LF398	
	National	LF398	
		LM298	
	PMI	SMP-10	
	Signetics	**NE5537**	**3692,3720**
◆LH2101	AMD	LH2101	
	Intersil	LH2101	
	National	LH2101	
	Raytheon	LH2101	
◆LH2308	Intersil	LH2308	
	National	LH2308	
◆LM101	AMD	LM101	
	AD	AD101	
	Fairchild	μA101	
	Intersil	AD101	
	LinearTech	LM101	
	Motorola	LM101	
	Raytheon	LM101	
	SiliconG	SG101	
	ThomsonCSF	LM101	
LM111	AD	AD111	
	Fairchild	μA111	
	LinearTech	LM111	
	Motorola	**LM111**	**3631**
	National	LM111	
	Raytheon	LM111	
	SiliconG	SG111	
	TI	**LM111**	**719**
	ThomsonCSF	LM111	
LM119	LinearTech	LM119	
	National	LM119	
LM124A	AMD	LM124A	
	LinearTech	LT1014	
	Motorola	LM124A	
	National	LM124A	
	RCA	CA124A	
	SiliconG	SG124	
	TI	LM124A	
LM139	Fairchild	μA139	
	Motorola	**LM139**	**3631**
	National	LM139	
	PMI	CMP-04	
		PM139	
	Raytheon	LM139	
			(Continued)
LM139	**RCA**	**CA139**	**3672,3677**
	TI	**LM139**	**719**
LM158	LinearTech	LT1013	
	Motorola	**LM158**	**3617**
	National	LM158A	
	Raytheon	RM4139	
	RCA	**CA158A**	**3672**
	TI	**LM158**	**718**
LM1870	National	LM1870	
◆LM1880	National	LM1880	
LM193	**Motorola**	**LM193**	**3631**
	National	LM193A	
	TI	**LM193**	**719**
LM211	AD	AD211	
	Motorola	**LM211**	**3631**
	National	LM211	
	RCA	LM211	
	SiliconG	SG211	
	TI	LM211	
	ThomsonCSF	LM211	
LM219	National	LM219	
	ThomsonCSF	TDE0119	
LM239	Fairchild	UA250	
		UA26LS31	
		UA26LS32	
		μA239	
	Motorola	**LM239**	**3631**
	National	LM239	
	PMI	CMP-04	
		PM239	
	Raytheon	LM239	
	RCA	**CA239**	**3672,3677**
	TI	LM239	
	ThomsonCSF	TDE0139	
LM258	**Motorola**	**LM258**	**3617**
	National	LM258A	
	RCA	**CA258A**	**3672**
	TI	LM258	
	ThomsonCSF	TDE0158	
LM2901	Cypress	CY7C901	
	Fairchild	μA2901	
		μA3302	
	Motorola	**LM2901**	**3631**
		MC3302	**3631**
	National	LM2901	
		LM3302	
	NEC	μPC2901	
	PMI	CMP-04	
	Raytheon	LM2901	
		RC3302	
	RCA	CA3302	
	SGS	LM2901	
		MC3302	
	Signetics	**MC3302**	**3721**
	SiliconG	SG324A	
	TI	LM2901	
		LM3302	
	ThomsonCSF	LM2901	
◆LM2902	Fairchild	μA2902	
	Hitachi	HA17902	
	Motorola	**LM2902**	**3618**
	National	LM2902	
	NEC	μPC2902	
	Raytheon	LM2902	
	SGS	LM2902	
	TI	LM2902	
	ThomsonCSF	LM2902	
LM2903	AD	AD311	
	Fairchild	μA311	
	LinearTech	LM311	
	Motorola	**LM2903**	**3631**
		LM311	**3631**
	National	LM2903	
		LM311	
	NEC	μPC271	
		μPC311	
	Raytheon	LM311	
	RCA	**CA311**	**3672,3677**
		LM311	
	SGS	LM2903	
		LM311	
	Signetics	**LM311**	**3721**
	SiliconG	SG311	
	TI	LM2903	
		LM311	
	ThomsonCSF	LM2903	
		LM311	
		SFC3111	
◆LM2904	**Motorola**	**LM2904**	**3617**
	RCA	CA2904	
	TI	LM2904	
	ThomsonCSF	LM2904	

◆ Discontinued

The manufacturers report their devices can be used as direct replacements.
Performance details often differ, so compare the specifications considering your requirements.

Signetics (Cont'd)

Manufacturer Device	Replacement Source	Device	IC Master Page
LM293	**Motorola**	**LM293**	3631
	National	LM293	
	TI	LM293	
◆LM301	AD	AD301	
	Fairchild	μA301A	
	Intersil	AD301	
	LinearTech	LM301	
		LM301A	
	Motorola	LM301	
	National	LM301	
		LM301A	
	NEC	μPC157	
		μPC301	
	Raytheon	LM301	
	RCA	CA301	
		LM301	
	SiliconG	SG301	
	TI	LM301	
		LM301A	
	ThomsonCSF	LM301A	
	Toshiba	TA7506	
LM311	AD	AD311	
	Fairchild	μA311	
	LinearTech	LM311	
	Motorola	**LM2903**	3631
		LM311	3631
	National	LM2903	
		LM311	
	NEC	μPC271	
		μPC311	
	Raytheon	LM311	
	RCA	**CA311**	3672,3677
		LM311	
	SGS	LM2903	
		LM311	
	Signetics	**LM2903**	3725
	SiliconG	SG311	
	TI	LM2903	
		LM311	
	ThomsonCSF	LM2903	
		LM311	
		SFC3111	
LM319	NEC	μPC319	
	ThomsonCSF	LM319	
LM358	**Motorola**	**LM358**	3617
	National	LM358A	
	NEC	μPC358	
	RCA	**CA358A**	3672
		LM358	
	Sanyo	LA6358	
	SGS	LM358	
	Signetics	**NE532**	3729
	TI	LM358	
	ThomsonCSF	LM358	
◆LM381	National	LM381	
◆LM382	National	LM382	
◆LM387	National	LM387	
LM393	**Motorola**	**LM393**	3631
	Sanyo	LA6393	
	TI	LM393	
MC1408	AMD	AM1408	
		DAC-08	
		SSS1408	
	AD	AD1408	
		ADDAC-08	
	Datel	DAC-08B	
		DAC-I8BC	
		DAC-IC8B	
		DAC-IC8BC	3162
	Fairchild	DAC-08	
		MA0802M	
		μA0801	
		μA0802	
	Hitachi	HA17408	
	Motorola	**DAC-08**	3630
		MC1408	
	National	DAC0801	
		DAC0802	
		DAC0806	
		DAC0807	
		DAC0808	
	NEC	μPC624	
	PMI	**DAC-08**	3637,3639
		DAC-1408	
	Raytheon	**DAC-08**	3664
◆MC1456	**Datel**	**AM-460-2**	3163
	Elantec	**EHA2605**	3538
	Harris	HA-2605	
	Motorola	**MC1456**	3616
	TI	MC1456	
MC1489A	**Exar**	**XR1489A**	3561
	Fairchild	UA150	
		UA212A	
		μA1489A	
	Motorola	**MC1489A**	3211,3212
	National	DS1489A	
	SGS	MC1489	
	SiliconG	SG1489A	
	TI	MC1489A	
		SN75189A	
MC1496	Fairchild	μA796	
	Motorola	MC1496	
	National	LM1496	
	Plessey	SL1496	
	SiliconG	SG1496	
MC1508	AD	AD1508	
	Datel	DAC-IC8BM	
	Motorola	MC1508	
	National	MC1508	
	PMI	DAC-1508	
	Signetics	SE5008	
		SE5009	
◆MC1556	**Elantec**	**EHA2600**	3538
	Fairchild	μA741	
	Harris	HA-2600	
	Motorola	**MC1556**	3616
	TeledyneP	1326	
	TI	MC1556	
MC1596	Motorola	MC1596	
	National	LM1596	
	SiliconG	SG1596	
MC3302	Cypress	CY7C901	
	Fairchild	μA2901	
		μA3302	
	Motorola	**LM2901**	3631
		MC3302	3631
	National	LM2901	
		LM3302	
	NEC	μPC2901	
	PMI	CMP-04	
	Raytheon	LM2901	
		RC3302	
	RCA	CA3302	
	SGS	LM2901	
		MC3302	
	Signetics	**LM2901**	3721,3722
	SiliconG	SG324A	
	TI	LM2901	
		LM3302	
	ThomsonCSF	LM2901	
MC3303	Fairchild	UA338	
		μA3303	
	Motorola	**MC3303**	3618
	SGS	MC3303	
	TI	MC3303	
MC3410	Motorola	MC3410	
MC3503	Raytheon	RM4137	
	TI	MC3503	
MC3510	Motorola	MC3510	
	Signetics	**NE5410**	3690,3722
◆N2901A	**Fairchild**	**29F01**	1028
		F2901A	
	National	IDM2901A	
	ThomsonCSF	SFC2901	
N5111	**Motorola**	**MC1357**	3613
	National	LM2111	
		LM2113	
	RCA	CA2111	
	Sprague	ULN-2111	
	TI	SN76642	
		SN76643	
N72HS137	AMD	AM27S33	
	Fairchild	93453	
	Fujitsu	MB7122	
	Hitachi	HN25045	
	MMI	5353-1	
		535441	
		6353-1	
		63S441	4101,4102
		G35441	
	Motorola	**MCM7643**	4124
	National	DM74S573	
	NEC	UPB426	
	Signetics	N825137	
		N82S137	4166
		S82S195	
	TI	TBP24S41	
◆N8202	Raytheon	RC8202	
N82147	Motorola	MC14508	
	National	DM74147	
	RCA	CD4508	
			(Continued)
N82147	SGS	HCC/HCF4508	
	Signetics	**74147**	1157
		HEF4508	
	Solitron	CM4508	
	SSS	SCL4508	
	TI	SN74147	
	Toshiba	TC4508	
N82148	National	DM74148	
		DM8318	
	Signetics	**74148**	1157
	TI	SN74148	
◆N8230	Fairchild	9312	
	National	DM8312	
	Raytheon	RC8230	
		RC9312	
◆N8233	Raytheon	RC8233	
N8234	Raytheon	RC8234	
N8242	**Fairchild**	**74LS266**	5311
	Motorola	**SN74LS266**	1123
	National	DM74LS266	
	Panasonic	DN74LS266	
	Raytheon	RC8242	
	SGS	T74LS266	
	Signetics	**74LS266**	1158
	TI	SN74LS266	
N8243	Raytheon	RC8243	
◆N8250	National	8250A	
	Raytheon	RC8250	
N825137	AMD	AM27S33	
	Fairchild	93453	
	Fujitsu	MB7122	
	Hitachi	HN25045	
	MMI	5353-1	
		535441	
		6353-1	
		63S441	4101,4102
		G35441	
	Motorola	**MCM7643**	4124
	National	DM74S573	
	NEC	UPB426	
	Signetics	N72HS137	
		N82S137	4166
		S82S195	
	TI	TBP24S41	
◆N8252	Fairchild	9031	
		9301	
	National	DM8301	
		DM9301	
	Raytheon	RC8252	
	Signetics	S8252	
N8262	Raytheon	RC8262	
N8266	Raytheon	RC8266	
N8271	Fairchild	74179	
	Raytheon	RC8271	
	TI	SN74179	
N8273	Raytheon	RC8273	
N8274	Raytheon	RC8274	
◆N8277	Fairchild	9328	
◆N8280	Fairchild	74176	
		96176	
	National	DM74176	
		DM8280	
	Raytheon	RC8280	
	Signetics	74176	
	TI	SN74176	
◆N8281	Fairchild	74177	
	National	DM74177	
		DM8281	
	Raytheon	RC8281	
	Signetics	74177	
	TI	SN74177	
N82HS185	AMD	27S185	
		AM27S185	
	Fujitsu	MB7128	
	Hitachi	HN25085	
	MMI	5389	
		6389	4102
		6389-1	
		63S841	4101,4102
	Motorola	**MCM7685**	4124
	National	77S185	
		87S185	
		DM87S185	
	Raytheon	29651	
		29651A	4134
	Signetics	82S185	
		N82S185	4166
	TI	24S81	
		TBP24S81	
N82HS641	Cypress	CY7C264	
	RCA	CD40110	
	SGS	HCC/HCF40110	
N82LS181	Signetics	S82LS181	
	TI	TBP28L86	
◆N82S09	Fairchild	93419	
	Signetics	S82S09	
N82S100	Fairchild	93459	
	Signetics	S82S100	
N82S101	Signetics	S82S101	
N82S115	AMD	AM27S15	
N82S123	AMD	AM27LS19	
		AM27S19	
	Fujitsu	MB7112	
	MMI	5331-1	
		53S081	4101
		6331-1	
		63S081	4101,4102
	Motorola	MCM27S19	
	National	DM74S288	
		DM8578	
	Signetics	S82S123	
	TI	**TBP18S030**	729
N82S126	AMD	AM27S20	
	Fujitsu	MB7113	
	MMI	6300-1	
		63S140	4101,4102
	National	DM74S387	
	TI	TBP24SA10	
N82S129	AMD	27521	
		AM27S11	
		AM27S21	
	Fujitsu	MB7114	
	MMI	6301-1	
		63S141	4101,4102
	National	DM74S287	
	TI	**TBP24S10**	729
N82S130	AMD	AM27S12	
	Fujitsu	MB7115	
	MMI	6305-1	
		63S240	4101,4102
	National	DM74S570	
N82S131	AMD	AM27S13	
	Fujitsu	MB7116	
	Harris	HM7621	
	MMI	6306-1	
		63S241	4101,4102
	Motorola	**MCM7621**	4124
	National	DM74S571	
N82S137	AMD	AM27S33	
	Fairchild	93453	
	Fujitsu	MB7122	
	Hitachi	HN25045	
	MMI	5353-1	
		535441	
		6353-1	
		63S441	4101,4102
		G35441	
	Motorola	**MCM7643**	4124
	National	DM74S573	
	NEC	UPB426	
	Signetics	N72HS137	
		N825137	
		S82S195	
	TI	TBP24S41	
N82S140	AMD	AM27S30	
	MMI	6340-1	
	National	DM74S475	
		DM77S475	
		DM87S475	
	TI	TBP28SA46	
N82S141	AMD	AM27S31	
	MMI	6341-1	
	Motorola	**MCM7641**	4124
	National	DM74S474	
	TI	TBP28S46	
N82S146	AMD	AM27S28	
	Fujitsu	MB7123	
	MMI	6348-1	
	National	DM74S473	
	TI	TBP28SA42	
N82S147	AMD	AM27S29	
	Fujitsu	MB7124	
	MMI	6349-2	
	National	DM54S472	
		DM74S472	
	Raytheon	**29623**	4134
N82S180	AMD	AM27S180	
	Fujitsu	MB7131	
	MMI	6380-1	
	National	DM87S180	
		DM87S229	
	TI	TBP28SA86A	
N82S184	AMD	AM27S184	
	Fujitsu	MB7127	
			(Continued)

◆ Discontinued

Bold face device numbers indicate manufacturers data is provided in the IC Master on the pages noted.

Signetics (Cont'd)

Manufacturer Device	Replacement Source	Device	IC Master Page
N82S184	Hitachi	HM25045	
	MMI	6388	
		6388-1	
	National	DM87S184	
	TI	TBP24SA81	
N82S185	AMD	27S185	
		AM27S185	
	Fujitsu	MB7128	
	Hitachi	HN25085	
	MMI	5389	
		6389	**4102**
		6389-1	
		63S841	**4101,4102**
	Motorola	**MCM7685**	**4124**
	National	77S185	
		87S185	
		DM87S185	
	Raytheon	29651	
		29651A	**4134**
	Signetics	82S185	
		N82HS185	
	TI	24S81	
		TBP24S81	
N82S191	AMD	27S191	
		AM27S191	
	Fairchild	932511	
	Fujitsu	MB7138	
	Harris	76161	
		HM76161	
	Hitachi	HN25169	
	MMI	**63S1681**	**4101,4103**
	Motorola	MCM76101	
	National	77S191	
		87S191	
		DM87S191	
	Raytheon	**29681**	**4134**
	Signetics	82S191	
	TI	28S166	
		TBP28S166	
N82S212	Fairchild	93479	
	Signetics	S82S212	
N82S23	AMD	AM27S18	
	Fujitsu	MB7111	
	Harris	HM7602	
	MMI	**6330**	**4102**
	National	DM74S188	
	TI	TBP18SA30	
N82S25	Fairchild	7489	
	National	DM7489	
		DM74S289	
		DM8589	
		MM74S289	
	Signetics	74S289	
	TI	SN74S289B	
N82S2708	Signetics	S82S2708	
	TI	TBP28S2708A	
N82S291	Signetics	N87S290	
N82S321	AMD	27S43	
		AM27S43	
	Fujitsu	MB7142	
	MMI	**53S3281**	**691,4101**
		63S3281	**4101,4103**
	National	77S321	
		87S321	
		DM87S321	
	Raytheon	**29671**	**4134**
	Signetics	82S321	
N82S80	**Fairchild**	**74LS196**	**5311**
	Hitachi	HD74LS196	
	Motorola	**SN74LS196**	**1127**
	National	DM74LS196	
	Panasonic	DN74LS196	
	SGS	574LS196	
	TI	SN74LS196	
N87S290	Signetics	N82S291	
N8T09	Raytheon	RC8T09	
N8T10	Fairchild	74173	
	National	DM74173	
		DM8551	
	Raytheon	RC8T10	
	TI	SN74173	
N8T125	**Motorola**	**SN74LS640**	**1125**
	Signetics	**74LS640**	**1159**
	TI	SN74LS640	
N8T20	Raytheon	RC8T20	
N8T22	Fairchild	74122	
		9601	
	National	DM8601	

(Continued)

Manufacturer Device	Replacement Source	Device	IC Master Page
N8T22	National	DM9601	
	Raytheon	RF8601	
		RF9601	
	Signetics	S8T22	
	TI	SN74122	
N8T25	National	DS3625	
N8T26	Hitachi	HD268T26	
	Motorola	**MC6880A**	**3210**
		MC8T26	
N8T26A	Fairchild	μA8T26A	
	Motorola	**MC8T26A**	**3210**
	National	DS8T26A	
	TI	N8T26A	
N8T28	**Motorola**	**MC8T28**	**3210**
N8T34	National	DS8834	
N8T37	**Motorola**	**MC3437**	**3211**
	National	DS8837	
N8T380	National	DS8836	
N8T74	Fairchild	9374	
N8T95	**Motorola**	**MC6885**	**3209**
		MC8T95	**3209**
	National	DM8095	
	TI	SN74365	
◆NE5007	AMD	AM1408	
		DAC-08	
		SSS1408	
	AD	AD1408	
		ADDAC-08	
	Datel	DAC-08B	
		DAC-I8BC	
		DAC-IC8B	
		DAC-IC8BC	**3162**
	Fairchild	DAC-08	
		MA0802M	
		μA0801	
		μA0802	
	Hitachi	HA17408	
	Motorola	**DAC-08**	**3630**
		MC1408	
	National	DAC0801	
		DAC0802	
		DAC0806	
		DAC0807	
		DAC0808	
	NEC	μPC624	
	PMI	**DAC-08**	**3637,3639**
		DAC-1408	
	Raytheon	**DAC-08**	**3664**
	Signetics	MC1408	
◆NE5008	AMD	AM1408	
		DAC-08	
		SSS1408	
	AD	AD1408	
		ADDAC-08	
	Datel	DAC-08B	
		DAC-I8BC	
		DAC-IC8B	
		DAC-IC8BC	**3162**
	Fairchild	DAC-08	
		MA0802M	
		μA0801	
		μA0802	
	Hitachi	HA17408	
	Motorola	**DAC-08**	**3630**
		MC1408	
	National	DAC0801	
		DAC0802	
		DAC0806	
		DAC0807	
		DAC0808	
	NEC	μPC624	
	PMI	**DAC-08**	**3637,3639**
		DAC-1408	
	Raytheon	**DAC-08**	**3664**
	Signetics	MC1408	
◆NE5009	AMD	AM1408	
		DAC-08	
		SSS1408	
	AD	AD1408	
		ADDAC-08	
	Datel	DAC-08B	
		DAC-I8BC	
		DAC-IC8B	
		DAC-IC8BC	**3162**
	Fairchild	DAC-08	
		MA0802M	
		μA0801	
		μA0802	
	Hitachi	HA17408	
	Motorola	**DAC-08**	**3630**
		MC1408	
	National	DAC0801	

(Continued)

Manufacturer Device	Replacement Source	Device	IC Master Page
◆NE5009	National	DAC0802	
		DAC0806	
		DAC0807	
		DAC0808	
	NEC	μPC624	
	PMI	**DAC-08**	**3637,3639**
		DAC-1408	
	Raytheon	**DAC-08**	**3664**
	Signetics	MC1408	
NE5018	AMD	AM6081	
	Datel	DAC-UP8B	
	Signetics	**NE5019**	**3725**
		NE5118	**3725**
		NE5119	**3725**
NE5019	AMD	AM6081	
	Datel	DAC-UP8B	
	Signetics	**NE5018**	**3690,3720,3725**
		NE5118	**3725**
		NE5119	**3725**
NE5020	Datel	DAC-UP10	
NE5118	AMD	AM6081	
	Datel	DAC-UP8B	
	Signetics	**NE5018**	**3690,3720,3725**
		NE5019	**3725**
		NE5119	**3725**
NE5119	AMD	AM6081	
	Datel	DAC-UP8B	
	Signetics	**NE5018**	**3690,3720,3725**
		NE5019	**3725**
		NE5118	**3725**
NE529	National	LM361	
	PMI	CMP-05	
NE532	**Motorola**	**LM358**	**3617**
	National	LM358A	
	NEC	μPC358	
	RCA	**CA358A**	**3672**
		LM358	
	Sanyo	LA6358	
	SGS	LM358	
	Signetics	**LM358**	**3722,3729**
	TI	LM358	
	ThomsonCSF	LM358	
◆NE536	Intersil	LM740	
NE5410	Motorola	MC3510	
	Signetics	**MC3510**	**3725**
NE5501	RIFA	PBD352311	
	Sprague	ULN-2021	
	TI	SN75466	
◆NE5502	RIFA	PBD3524-14	
	SiliconG	SG2002	
		SG2022	
	Sprague	ULN-2022	
		ULS-2002	
	TI	SN75467	
◆NE5503	Exar	XR2003	
	Motorola	MC1413T	
	RIFA	PBD3523-13	
	SiliconG	SG2023	
	Sprague	ULN-2023	
		ULQ-2003	
	TI	SN75468	
◆NE5504	RIFA	PBD352312	
	SiliconG	SG2024	
	Sprague	ULN-2024	
	TI	SN75469	
NE5532	Exar	XR5532	
	Signetics	**NE5532A**	**3720**
		SE5532	**3721,3729**
		SE5532A	**3721,3729**
	TI	NE5532	
		NE5532A	
NE5532A	Exar	XR5532	
	Signetics	**NE5532**	**3720**
		SE5532	**3721,3729**
		SE5532A	**3721,3729**
	TI	NE5532	
		NE5532A	
NE5533	**Exar**	**XR5533**	**3556**
	Signetics	**NE5533A**	**3708,3729**
	TI	NE5533	
NE5533A	**Exar**	**XR5533**	**3556**
	Signetics	**NE5533**	**3708,3729**
	TI	NE5533	
NE5534	AnalogSys	MA332	
	Datel	AM-453-2C	
	Exar	**XR5534**	**3557**

(Continued)

Manufacturer Device	Replacement Source	Device	IC Master Page
NE5534	Raytheon	RC5534	
	Signetics	**NE5534A**	**3708,3720,3729**
	SSM	SSM2134	
	TI	NE5534	
		NE5534A	
NE5534A	AnalogSys	MA332	
	Datel	AM-453-2C	
	Exar	**XR5534**	**3557**
	Raytheon	RC5534	
	Signetics	**NE5534**	**3708,3720,3729**
	SSM	SSM2134	
	TI	NE5534	
		NE5534A	
NE5537	LinearTech	LF398	
	National	LF398	
		LM298	
	PMI	SMP-10	
	Signetics	**LF398**	**3725**
NE5539	Harris	HA-2539	
	TeledyneP	1342	
NE555	Exar	XR555	
	Fairchild	μA555	
	Hitachi	HA17555	
	Intersil	NE555	
	Mitsubishi	M51841	
		M51848	
		M5251	
		M5E555	
	Motorola	MC1455	
	NEC	μPC1555	
	Raytheon	RC555	
	RCA	CA555	
	Sanyo	LB8555	
	SGS	NE555	
	Signetics	NE555N	
	TI	NE555	
	ThomsonCSF	LM555	
	Samsung	**NE555**	**3679**
NE555N	Exar	XR555	
	Fairchild	μA555	
	Hitachi	HA17555	
	Intersil	NE555	
	Mitsubishi	M51841	
		M51848	
		M5251	
		M5E555	
	Motorola	MC1455	
	NEC	μPC1555	
	Raytheon	RC555	
	RCA	CA555	
	Sanyo	LB8555	
	SGS	NE555	
	Signetics	**NE555**	**3721**
	TI	NE555	
	ThomsonCSF	LM555	
	Samsung	**NE555**	**3679**
NE556	Mitsubishi	M5E556	
	SGS	NE556	
	ThomsonCSF	LM556	
	Samsung	**NE556**	**3679**
NE5560	Ferranti	ZN1060	
	Sprague	ULN-8160	
NE5561	Cherry	CS5561	
		CS5561N	
	IPS	**IP5561C**	**3599**
	Sprague	ULN-8161	
NE5562	Sprague	ULN-8162	
NE5563	Sprague	ULN-8163	
NE558	Exar	XR558	
	Signetics	**SE558**	**3720**
◆NE5601	Exar	XR2001	
		XR2001C	
		XR2201C	
	Mitsubishi	M54524	
	Motorola	**MC1411**	**3212**
		ULN2001	**3212**
	NEC	μPA2001	
	RIFA	PBD3523-11	
	Sanyo	LB1231	
	SGS	L201	
		ULN2001	
	SiliconG	SG2001	
	Sprague	**ULN-2001**	**3269**
		ULQ-2001	
	TI	ULN2001A	
	Toshiba	TD62001	
		TD62101	
NE5602	Exar	XR2002C	
		XR2202C	
	Fairchild	MC1412	

(Continued)

◆ Discontinued

The manufacturers report their devices can be used as direct replacements.
Performance details often differ, so compare the specifications considering your requirements.

Signetics (Cont'd)

Manufacturer Device	Replacement Source	Device	IC Master Page
NE5602	Mitsubishi	M54525	
	Motorola	**MC1412**	**3212**
		ULN2002	**3212**
	NEC	µPA2002	
	RIFA	PBD352304	
	Sanyo	LB1232	
	SGS	L202	
		ULN2002	
	SiliconG	SG2002	
	Sprague	ULN-2002	
	TI	ULN2002A	
	Toshiba	TD62002	
NE5603	Exar	XR2003C	
		XR2203C	
	Fairchild	MC1413	
	Mitsubishi	M54523	
	Motorola	**MC1413**	**3212**
		ULN2003	**3212**
	NEC	µPA2003	
	RIFA	PBD352303	
	Sanyo	LB1233	
	SGS	L203	
		ULN2003	
	Signetics	**ULN2003**	**3721**
	SiliconG	SG2003	
	Sprague	ULN-2003	
	Telefunken	TDA2003	
	TI	ULN2003A	
	Toshiba	TD62003	
		TD62103	
NE5604	Exar	XR2204C	
	Mitsubishi	M54526	
	Motorola	**MC1416**	**3212**
		ULN2004	**3212**
	NEC	µPA2004	
	RIFA	PBD352302	
	Sanyo	LB1234	
	SGS	L204	
		ULN2004	
	Signetics	**ULN2004**	**3721**
	SiliconG	SG2004	
	Sprague	ULN-2004	
		ULS-2004	
	TI	ULN2004A	
	Toshiba	TD62004	
		TD62104	
NE564	Sprague	ULN-8564	
NE565	National	LM565	
	Signetics	**SE565**	**3728**
NE566	National	LM566	
	Signetics	**SE566**	**3723**
NE567	Exar	XR2567	
		XR567	
	MCE	MCE-567	
	National	LM567	
	Signetics	**SE567**	**3728**
	Samsung	LM567	
NE592	**Intersil**	**NE592**	**3602**
NE594	Dionics	DI513B	
		DI514B	
	Exar	**XR6118**	**3554**
	OKI	MSL912	
	Sanyo	LB1290	
	Sprague	**UDN-6118**	**3269**
	Toshiba	TD62781	
NS82HS195	AMD	AM27S181M	
	Cypress	CY7C282M	
	Fairchild	932451	
		93451	
	Fujitsu	MB7132	
	Harris	7681	
	Hitachi	HN25089	
	MMI	5381-1	
		6381	**4102**
		6381-1	
	Motorola	**MCM7681**	**4124**
	National	DM77S181	
		DM77S281	
		DM87S281	
	Raytheon	29631AM	
		29632	
	Signetics	82S181	
		S82HS181	
		S82S181	
	TI	28S86	
		TBP28S86AM	
NS82S195	AMD	AM27541	
		AM27S41	
	Fujitsu	MB7134	
		MB7152	
NS82S195	**MMI**	**53S1641**	**4101**
		63S1641	**4101,4103**
	Motorola	**MCM76161**	**4124**
	National	DM77S195	
		DM87S195	
	Signetics	NS82HS195	
PC74HC190	Hitachi	HD74HC190	
	Motorola	MC74HC190	
	RCA	**CD74HC190**	**1150**
	SGS	M74HC190	
	Signetics	PCF74HC190	
	TI	SN74HC190	
	Toshiba	**TC74HC190**	**1363**
	Universal	US74HC190	
PC74HC4066	**Motorola**	**MC74HC4066**	**1130**
	RCA	CE74HC4066	
	SGS	M74HC4066	
	TI	SN74HC4075	
	Universal	US74HC4066	
PC74HC4075	AMD	AM2167	
	Cypress	CY7C167	
	Inmos	IMS1400	
	Motorola	**MC74HC4075**	**1122**
	Panasonic	MN74HC4075	
	RCA	**CD74HC4075**	**1149**
	SGS	M74HC4075	
	Toshiba	**TC74HC4075**	**1363**
	Universal	US74HC4075	
PC74HC4094	Cypress	CY7C186	
	IDT	**IDT7164**	**4055**
	RCA	**CD74HC4094**	**1149**
	SGS	M74HC4094	
PC74HC4515	Cypress	CY7C187	
	Fairchild	F1600	
	Hitachi	HM6287	
		HM6787	**4035**
	Inmos	IMS1600	
	IDT	IDT7187	
	Motorola	MCM6287	
	NEC	MPD4361	
	RCA	**CD74HC4515**	**1150**
	SGS	M74HC4515	
	Toshiba	TC5561	
		TC5562	
PC74HC4518	Cypress	CY7C171	
	IDT	IDT71681	
	RCA	**CD74HC4518**	**1150**
	SGS	M74HC4518	
PC74HC4543	Cypress	CY7C172	
	IDT	IDT71682	
	Motorola	**MC74HC4543**	**1130**
	National	MM74HC4543	
	RCA	**CD74HC4543**	**1150**
	SGS	M74HC4543	
	Toshiba	**TC74HC4543**	**1363**
	Universal	US74HC4543	
PCF74HC190	Hitachi	HD74HC190	
	Motorola	MC74HC190	
	RCA	**CD74HC190**	**1150**
	SGS	M74HC190	
	Signetics	PC74HC190	
	TI	SN74HC190	
	Toshiba	**TC74HC190**	**1363**
	Universal	US74HC190	
PCF74HCT393	Nitron	NC74HCT393	
	RCA	**CD74HCT393**	**1150**
	Universal	US74HCT393	
◆S54S289	AMD	SN5489-1	
		SN54S289	
	National	DM5489	
		DM54S289	
		MM54S289	
	Signetics	54S289	
		54S301	
		S8225	
		S82S25	
S7281	National	DM54177	
		DM7281	
	Raytheon	RM8281	
	Signetics	54177	
		S8281	
	TI	**SN54177**	**712**
◆S8200	Raytheon	RM8200	
◆S8201	Raytheon	RM8201	
S8202	Raytheon	RM8202	
◆S8203	Raytheon	RM8203	
◆S82147	National	DM54147	
	Signetics	54147	
	TI	**SN54147**	**712**
◆S82148	National	DM54148	
		DM9318	
◆S82148	Signetics	54148	
	TI	**SN54148**	**712**
S8224	National	DM5488	
S8225	AMD	SN5489-1	
		SN54S289	
	National	DM5489	
		DM54S289	
		MM54S289	
	Signetics	54S289	
		54S301	
		S82S25	
◆S8230	National	DM9312	
	Raytheon	RM9312	
S8231	Raytheon	RM8231	
◆S8241	**Motorola**	**SN54LS386**	**1123**
	National	DM54LS386	
	Raytheon	RM8241	
	Signetics	S82S41	
	TI	SN54LS386	
◆S8242	Raytheon	RM8242	
S8250	Raytheon	RM8250	
S8252	Fairchild	9031	
		9301	
	National	DM8301	
		DM9301	
	Raytheon	RC8252	
◆S8260	Raytheon	RM8260	
S8262	Raytheon	RM8262	
◆S8263	Raytheon	RM8263	
◆S8264	Raytheon	RM8264	
S8266	Raytheon	RM8266	
◆S8267	Raytheon	RM8267	
◆S8269	National	DM7200	
S8270	Raytheon	RM8270	
	TI	**SN54178**	**712**
S8271	Raytheon	RM8271	
	TI	**SN54179**	**712**
S8280	National	DM54176	
	Raytheon	RM8280	
	Signetics	54176	
	TI	**SN54176**	**712**
S8281	National	DM54177	
		DM7281	
	Raytheon	RM8281	
	Signetics	54177	
		S7281	
	TI	**SN54177**	**712**
◆S8288	National	DM7288	
S82HS137	AMD	AM27S33M	
	MMI	**53S441**	**4101**
	Motorola	MCM7643M	
	National	DM54S573	
		DM54S573A	
	Signetics	S82S137	
		S82S195	
	TI	TBP24S41M	
S82HS181	AMD	AM27S181M	
	Cypress	CY7C282M	
	Fairchild	932451	
		93451	
	Fujitsu	MB7132	
	Harris	7681	
	Hitachi	HN25089	
	MMI	5381-1	
		6381	**4102**
		6381-1	
	Motorola	**MCM7681**	**4124**
	National	DM77S181	
		DM77S281	
		DM87S281	
	Raytheon	29631AM	
		29632	
	Signetics	82S181	
		NS82HS195	
		S82S181	
	TI	28S86	
		TBP28S86AM	
S82HS185	MMI	5389	
		5389-1	
	National	DM77S185	
	Raytheon	29651AM	
	Signetics	S82S185	
	TI	TBP24S81M	
S82LS181	**Signetics**	**N82LS181**	**1175**
	TI	TBP28L86	
S82S09	Fairchild	93419	
S82S100	Fairchild	93459	
	Signetics	N82S100	
S82S101	Signetics	N82S101	
S82S116	National	DM54S200	
	Signetics	54S200	
S82S116	Signetics	54S201	
		S82S16	
S82S123	AMD	AM27LS19	
		AM27S19	
	Fujitsu	MB7112	
	MMI	5331-1	
		53S081	**4101**
		6331-1	
		63S081	**4101,4102**
	Motorola	MCM27S19	
	National	DM74S288	
		DM8578	
	Signetics	**N82S123**	**4166**
	TI	**TBP18S030**	**729**
S82S126	MMI	5300-1	
		53S140	**4101**
	National	DM54S387	
	TI	TBP24SA10M	
S82S129	MMI	5301-1	
		53S141	**4101**
	National	DM54S287	
S82S130	MMI	5305-1	
		53S240	**4101**
	National	DM54S570	
S82S131	MMI	5306-1	
		53S241	**4101**
	National	DM54S571	
S82S136	AMD	AM27S32	
	Fairchild	93452	
	Fujitsu	MB7121	
	Hitachi	HN25044	
	MMI	5352-1	
		6352	**4102**
	National	DM54S572	
	TI	TBP24SA41M	
S82S137	AMD	AM27S33M	
	MMI	**53S441**	**4101**
	Motorola	MCM7643M	
	National	DM54S573	
		DM54S573A	
	Signetics	S82HS137	
		S82S195	
	TI	TBP24S41M	
S82S140	MMI	5340-1	
	National	DM54S475	
		DM77S295	
		DM87S295	
S82S141	MMI	5341-1	
	National	DM54S474	
	TI	TBP28S46M	
S82S146	MMI	5348-1	
	National	DM54S473	
S82S147	Fujitsu	MBM7124	
	National	DM54S472	
	TI	DM54S472	
S82S16	National	DM54S200	
	Signetics	54S200	
		54S201	
		S82S116	
S82S17	National	S82S117	
		S82S17	
S82S180	MMI	5380-1	
	National	DM77S180	
	TI	TBP28SA86AM	
S82S181	AMD	AM27S181M	
	Cypress	CY7C282M	
	Fairchild	932451	
		93451	
	Fujitsu	MB7132	
	Harris	7681	
	Hitachi	HN25089	
	MMI	5381-1	
		6381	**4102**
		6381-1	
	Motorola	**MCM7681**	**4124**
	National	DM77S181	
		DM77S281	
		DM87S281	
	Raytheon	29631AM	
		29632	
	Signetics	82S181	
		NS82HS195	
		S82HS181	
	TI	28S86	
		TBP28S86AM	
◆S82S184	MMI	5388	
		5388-1	
	National	DM77S184	
S82S185	MMI	5389	
		5389-1	
	National	DM77S185	
	Raytheon	29651AM	

(Continued)

◆ Discontinued

Bold face device numbers indicate manufacturers data is provided in the IC Master on the pages noted.

Signetics (Cont'd)

Manufacturer Device	Replacement Source	Device	IC Master Page
S82S185	Signetics	S82HS185	
	TI	TBP24S81M	
S82S190	AMD	AM27S190	
	Fairchild	937510	
	Fujitsu	MB7137	
	Hitachi	HN25168	
	National	DM77S190	
		DM87S190	
	TI	TBP28SA166	
S82S191	**MMI**	**53S1681**	**4101**
	National	DM77S191	
S82S195	AMD	AM27S33	
	Fairchild	93453	
	Fujitsu	MB7122	
	Hitachi	HN25045	
	MMI	5353-1	
		535441	
		6353-1	
		63S441	**4101,4102**
		G35441	
	Motorola	**MCM7643**	**4124**
	National	DM74S573	
	NEC	UPB426	
	Signetics	N72HS137	
		N825137	
		N82S137	**4166**
	TI	TBP24S41	
S82S212	Fairchild	93479	
	Signetics	**N82S212**	**4166**
S82S23	AMD	AM27LS18	
	MMI	5330-1	
		53LS080	
		63LS080	
	National	DM54S188	
		DM7577	
S82S25	AMD	SN5489-1	
		SN54S289	
	National	DM5489	
		DM54S289	
		MM54S289	
	Signetics	54S289	
		54S301	
		S8225	
S82S2708	Signetics	N82S2708	
	TI	TBP28S2708A	
S82S321	National	DM77S321	
S82S41	**Motorola**	**SN54LS386**	**1123**
	National	DM54LS386	
	Raytheon	RM8241	
	TI	SN54LS386	
◆S82S707	Signetics	N82S707	
◆S82S708	Signetics	N82S708	
◆S8471	**Motorola**	**SN54LS12**	**1122**
	National	DM54LS12	
	TI	**SN54LS12**	**715**
◆S8H16	National	DM54H20	
◆S8H70	National	DM54H10	
◆S8H80	National	DM54H00	
◆S8H90	National	DM54H04	
S8T09	Raytheon	RM8T09	
◆S8T10	**Fairchild**	**54173**	**617**
	National	DM54173	
		DM7551	
	Raytheon	RM8T10	
	TI	**SN54173**	**712**
S8T13	National	DS55121	
	TI	**SN55121**	**721**
◆S8T14	National	DS55122	
	TI	**SN55122**	**721**
S8T22	Fairchild	74122	
		9601	
	National	DM8601	
		DM9601	
	Raytheon	RF8601	
		RF9601	
	Signetics	**N8T22**	**1175**
	TI	SN74122	
S8T95	National	DM7095	
	TI	**SN54365A**	**712**
◆S8T96	National	DM7096	
	TI	**SN54366A**	**712**
S8T97	National	DM7097	
	TI	**SN54367A**	**712**
S8T98	National	DM7098	
	TI	**SN54368A**	**712**
SA1458	Fairchild	UA1458HC	
	Harris	CM1458	
		HA5102	
	MicroPwr	MPOP14	
	Motorola	**MC1458**	**3617**

(Continued)

Manufacturer Device	Replacement Source	Device	IC Master Page
SA1458	National	LF412	
	NEC	MPC251	
	PMI	OP14	
	RCA	**CA1458**	**3672**
	SGS	MC1458	
	ThomsonCSF	μA1458	
	Samsung	**MC1458**	**3679**
		MC4558	**3679**
SA594	Sprague	UDQ-6118	
SCC80C31	Intel	80C31	
SCC80C39	Intel	80C39	
	Mitsubishi	M5M80C39	
	Toshiba	TMP80C39	
SCC80C49	Intel	80C49	
	NEC	μPD80C49	
	Toshiba	TMP80C49	
SCC80C51	Intel	80C51	
SCN2651	National	INS2651	
	SMC	COM2651	
SCN2652	Motorola	MC2652	
SCN2653	Motorola	MC2653	
		MC68653	**1657**
SCN2661	Motorola	MC2661	
		MC68661	**1657**
	SMC	COM2661	
SCN2681	EXEL	XL88C681	
	Motorola	MC2681	
SCN2682	Motorola	MC2682	
SCN68000	Hitachi	HD68000	
	Mostek	**MK68000**	**1647**
	Motorola	MC68000	
	Rockwell	R68000	
	ThomsonCSF	EF68000	
◆SCN68120	**Motorola**	**MC68120**	**1656,1663**
SCN68230	Mostek	MK68230	
	ThomsonCSF	EF68230	
SCN68652	**Motorola**	**MC68652**	**1657**
SCN68681	EXEL	XL68C681	
	Motorola	**MC68681**	**1657**
SCN8035	AMD	8035	
	Intel	8035	
	National	INS8035	
	NEC	μPD8035	
	Toshiba	**TMP8035**	**1750**
SCN8048	AMD	8048	
	Intel	8048	
	National	INS8048	
	NEC	μPD8048	
	Toshiba	**TMP8048**	**1750**
SCN8049	Intel	8049	
	National	INS8049	
	NEC	μPD8049	
	Toshiba	**TMP8049**	**1750**
◆SD5000	SPI	SD5000	
	Siliconix	SDS000	
◆SD5001	SPI	SD5001	
	Siliconix	SDS001	
◆SD5002	SPI	SD5002	
	Siliconix	SDS002	
◆SD5200	SPI	SD5200	
	Siliconix	SDS200	
		SI5200	
SE5008	AD	AD1508	
	Datel	DAC-IC8BM	
	Motorola	MC1508	
	National	MC1508	
	PMI	DAC-1508	
	Signetics	MC1508	
		SE5009	
SE5009	AD	AD1508	
	Datel	DAC-IC8BM	
	Motorola	MC1508	
	National	MC1508	
	PMI	DAC-1508	
	Signetics	MC1508	
		SE5008	
SE5019	AMD	AM6080	
	Signetics	**SE5118**	**3725**
		SE5119	**3725**
SE5118	AMD	AM6080	
	Signetics	**SE5019**	**3720**
		SE5119	**3725**
SE5119	AMD	AM6080	
	Signetics	**SE5019**	**3720**
		SE5118	**3725**
SE5410	Datel	DAC-IC10BM	
◆SE550	National	LM550	
SE5532	Exar	XR5532	
	Signetics	**NE5532**	**3720**
		NE5532A	**3720**

(Continued)

Manufacturer Device	Replacement Source	Device	IC Master Page
SE5532	**Signetics**	**SE5532A**	**3721,3729**
	TI	NE5532	
		NE5532A	
SE5532A	Exar	XR5532	
	Signetics	**NE5532**	**3720**
		NE5532A	**3720**
		SE5532	**3721,3729**
	TI	NE5532	
		NE5532A	
◆SE5533	**Exar**	**XR5533**	**3556**
	Signetics	**NE5533**	**3708,3729**
		NE5533A	**3708,3729**
	TI	NE5533	
◆SE5533A	**Exar**	**XR5533**	**3556**
	Signetics	**NE5533**	**3708,3729**
		NE5533A	**3708,3729**
	TI	NE5533	
SE5534	Datel	AM-453-2M	
	Raytheon	**RM5534**	**3666**
	Signetics	**SE5534A**	**3708,3720,3729**
SE5534A	Datel	AM-453-2M	
	Raytheon	**RM5534**	**3666**
	Signetics	**SE5534**	**3708,3720,3729**
SE554A	**TI**	**SE5534**	**718**
		SE5534A	
SE555	Exar	XR555M	
	Intersil	SE555	
	Motorola	MC1555	
	Raytheon	RM555	
	TI	**SE555**	**720**
SE5560	Sprague	ULS-8160	
SE5561	Cherry	CS5561S	
	IPS	**IP5561**	**3599**
	Sprague	ULS-8161	
SE5562	Sprague	ULS-8162	
SE5563	Sprague	ULS-8163	
SE558	Exar	XR558	
	Signetics	**NE558**	**3720**
SE565	National	LM565	
	Signetics	**NE565**	**3722**
SE566	National	LM566	
	Signetics	**NE566**	**3723**
SE567	Exar	XR2567	
		XR567	
	MCE	MCE-567	
	National	LM567	
	Signetics	**NE567**	**3720**
	Samsung	LM567	
SE592	**Intersil**	**SE592**	**3602**
	Motorola	SE592	
◆SG1524	Cherry	CS1524	
	Exar	**XR1524**	**3558**
	IPS	**IP1524**	**3599**
	LinearTech	LT1524	
	National	LM1524	
	RCA	CA1524	
	SGS	SG1524	
		UC1524A	
	SiliconG	SG1524	
	Sprague	ULS-8124	
	TI	**SG1524**	**720**
	Unitrode	**UC1524A**	**3739,3739**
SG1526A	**IPS**	**IP1526A**	**3599**
◆SG2524	Cherry	CS2524	
	Exar	XR2524	
	IPS	**IP2524**	**3599**
	RCA	CA2524	
	SGS	SG2524	
		UC2524A	
	SiliconG	SG2524	
	Sprague	ULQ-8124	
	TI	SG2524	
	Unitrode	**UC2524A**	**3739,3739**
SG2526A	**IPS**	**IP2526A**	**3599**
SG3524	Cherry	CS3524	
	Exar	**XR3524**	**3558**
	IPS	**IP3524**	**3599**
		IP3524B	**3599**
	National	LM3524	
	RCA	CA3524	
	SGS	SG3524	
		UC3524A	
	SiliconG	SG3524B	
	Sprague	ULN-8124	

(Continued)

Manufacturer Device	Replacement Source	Device	IC Master Page
SG3524	TI	SG3524	
	Unitrode	**UC3524A**	**3739,3739**
SG3526A	**IPS**	**IP3526A**	**3599**
SN74LS645-1	MMI	74LS645-1	
	TI	SN74LS645-1	
SP380	National	DS8640	
◆SU536	Intersil	SU536	
◆TBA120	National	TBA120	
	Siemens	TBA120	
	Telefunken	TBA120	
◆TBA1441	ThomsonCSF	TBA1441	
◆TBA520	Plessey	TBA520	
◆TBA530	Plessey	TBA530	
	Telefunken	TBA530	
◆TBA540	Plessey	TBA540	
	Telefunken	TBA540	
◆TBA550	Plessey	TBA550	
◆TBA560	Plessey	TBA560	
	Telefunken	TBA560	
TBA750	Plessey	TBA750	
◆TBA810	Fairchild	TBA810	
	SGS	TBA810	
	Telefunken	TDA810	
◆TBA920	Plessey	TBA920	
	ThomsonCSF	TBA920	
◆TBA990	Plessey	TBA990	
◆TCA440	Siemens	TCA440	
◆TCA800	Plessey	TCA800	
◆TDA2522	National	TDA2522	
	Plessey	TDA2522	
	Siemens	TDA2522	
◆TDA2523	National	TDA2523	
	Plessey	TDA2523	
◆TDA2530	Hitachi	HN462532	
	National	MM2532	
		NMC2532	
		TDA2530	
		TDA2532	
	Plessey	TDA2530	
	Siemens	TDA2530	
	SiliconG	SG2532	
◆TDA2532	Hitachi	HN462532	
	National	MM2532	
		NMC2532	
		TDA2530	
		TDA2532	
	Plessey	TDA2530	
	Siemens	TDA2530	
	SiliconG	SG2532	
TDA2540	Plessey	TDA2540	
	ThomsonCSF	TBA2540	
TDA2541	Plessey	TDA2541	
	ThomsonCSF	TDA2541	
◆TDA2560	National	TDA2560	
	Plessey	TDA2560	
	Siemens	TDA2560	
◆TDA2590	Plessey	TDA2590	
◆TDA2591	National	TDA2591	
	Telefunken	TDA2591	
TDA2593	National	TDA2593	
	Plessey	TDA2593	
	Telefunken	TDA2593	
	ThomsonCSF	TDA2593	
◆ULN2001	Exar	XR2001	
		XR2001C	
		XR2201C	
	Mitsubishi	M54524	
	Motorola	**MC1411**	**3212**
		ULN2001	**3212**
	NEC	μPA2001	
	RIFA	PBD3523-11	
	Sanyo	LB1231	
	SGS	L201	
		ULN2001	
	SiliconG	SG2001	
	Sprague	**ULN-2001**	**3269**
		ULQ-2001	
	TI	ULN2001A	
	Toshiba	TD62001	
		TD62101	
ULN2003	Exar	XR2003C	
		XR2203C	
	Fairchild	MC1413	
	Mitsubishi	M54523	
	Motorola	**MC1413**	**3212**
		ULN2003	**3212**
	NEC	μPA2003	
	RIFA	PBD352303	
	Sanyo	LB1233	
	SGS	L203	
		ULN2003	

(Continued)

◆ Discontinued

The manufacturers report their devices can be used as direct replacements.
Performance details often differ, so compare the specifications considering your requirements.

Signetics (Cont'd)

Manufacturer Device	Replacement Source	Device	IC Master Page
ULN2003	Signetics	NE5603	
	SiliconG	SG2003	
	Sprague	ULN-2003	
	Telefunken	TDA2003	
	TI	ULN2003A	
	Toshiba	TD62003	
		TD62103	
ULN2004	Exar	XR2204C	
	Mitsubishi	M54526	
	Motorola	**MC1416**	**3212**
		ULN2004	**3212**
	NEC	μPA2004	
	RIFA	PBD352302	
	Sanyo	LB1234	
	SGS	L204	
		ULN2004	
	Signetics	NE5604	
	SiliconG	SG2004	
	Sprague	ULN-2004	
		ULS-2004	
	TI	ULN2004A	
	Toshiba	TD62004	
		TD62104	
◆ULN6128	**Exar**	**XR6128**	**3554**
	Sprague	**UDN-6128**	**3269**
	Toshiba	TD62782	
μA723	Fairchild	μA723	
	Hitachi	HA17723	
	Intersil	LM723	
	Motorola	**MC1723**	**3625**
	National	LM723	
	Raytheon	RC723	
		RM723	
	RCA	CA723	
		LM723	
	SGS	L123	
		LM723	
	SiliconG	SG723	
	TI	μA723	
	ThomsonCSF	LM723	
μA733	Fairchild	μA733	
	Hitachi	HA17733	
	Intersil	μA733	
	Motorola	**MC1733**	**3616**
		NE592	
	National	LM733	
	TI	μA733	
◆μA740	Intersil	LM740	
μA747	AMD	747	
	Fairchild	μA747	
	Hitachi	HA17747	
	MicroPwr	MPOP04	
	Motorola	**MC1747**	**3617**
	National	LM747	
	NEC	μPC251	
	PMI	**OP-04**	**3636**
		PM747	
	Raytheon	RC747	
		RM747	
	RCA	**CA747**	**3672**
	TeledyneS	747	
	TI	μA747	
μA758	Fairchild	μA705	
	Motorola	**MC1309**	**3614**
		MC1311	
	National	LM1800	
	RCA	CA3145	
		CA3195	
	Sanyo	LA705	
		LA758	
	Sprague	ULN-3809	
		ULN-3812	
	TI	SN76111	
		SN76116	

Silicon General

Manufacturer Device	Replacement Source	Device	IC Master Page
L290B	SGS	L290B	
L291B	SGS	L291B	
L292	SGS	L292	
SC120-20	National	LM120-20	
SC140-06	National	LM140-06	
SC140-08	National	LM140-08	
SC140-18	National	LM140-18	
SC140-20	National	LM140-20	
SC140-24	National	LM140-24	
SC220-08	National	LM220-08	
SG101	AMD	LM101	
	AD	AD101	
	Fairchild	μA101	
SG101	Intersil	AD101	
	LinearTech	LM101	
	Motorola	LM101	
	Raytheon	LM101	
	ThomsonCSF	LM101	
SG104	National	LM104	
	ThomsonCSF	LM104	
SG105	AMD	LM105	
	Fairchild	μA105	
	Intersil	LM105	
	National	LM105	
	ThomsonCSF	LM105	
SG107	AMD	LM107	
	AD	**AD741S**	**3507**
	Burr-Brown	3500	
	LinearTech	LM107	
	National	LH741A	
		LM107	
	PMI	PM741	
	Raytheon	RC741	
	TI	**LM107**	**718**
	ThomsonCSF	LM107	
SG109	Fairchild	μA109	
	IPS	**IP140-5**	**3599**
	Motorola	LM109	
	National	LM109	
	ThomsonCSF	SFC2109	
◆SG110	AMD	LM110	
	National	LM110	
SG111	AD	AD111	
	Fairchild	μA111	
	LinearTech	LM111	
	Motorola	**LM111**	**3631**
	National	LM111	
	Raytheon	LM111	
	Signetics	**LM111**	**3725**
	TI	**LM111**	**719**
	ThomsonCSF	LM111	
SG117	Fairchild	μA117	
	IPS	**IP117**	**3599**
	LinearTech	LM117	
	MCE	MCE-LM117	
	Motorola	**LM117**	**3625**
	TI	LM117	
	ThomsonCSF	LM117	
		TDC0117	
	Unitrode	UC117	
SG1173	SGS	L165	
	Sprague	ULN-3751	
SG120-08	National	LM120-08	
SG120-12	**IPS**	**IP120-12**	**3599**
	National	LM120-12	
SG120-15	**IPS**	**IP120-15**	**3599**
	National	LM120-15	
SG120-18	National	LM120-18	
SG120-5	Fairchild	μA7905	
		μA79M05	
	IPS	**IP120-5**	**3599**
		IP320-5	**3599**
		IP7905	**3599**
	Lambda	LμA7905	
	National	LM320MP5	
		LM7905	
		LM79M05	
	NEC	μPC7905	
	SiliconG	SG320-05	
		SG320P-5	
	TI	μA7905	
	Unitrode	UC7905	
SG123	Fairchild	SH123	
		UA138	
		μA123	
	IPS	**IP123**	**3599**
	LinearTech	LM123	
	Motorola	**LM123**	**3622**
		MC78T05	**3622**
	National	LM123	
SG124	AMD	LM124A	
	LinearTech	LT1014	
	Motorola	LM124A	
	National	LM124A	
	RCA	CA124A	
	Signetics	LM124A	
	TI	LM124A	
◆SG139	Fairchild	μA139	
	Motorola	**LM139**	**3631**
	National	LM139	
	PMI	CMP-04	
		PM139	
	Raytheon	LM139	
	RCA	**CA139**	**3672,3677**
◆SG139	Signetics	LM139	
	TI	**LM139**	**719**
◆SG139A	AMD	LM139A	
	Motorola	**LM139A**	**3631**
	National	LM139A	
	PMI	CMP-04	
		PM139A	
	RCA	**CA139A**	**3672,3677**
	TI	**LM139A**	**719**
SG140-05	National	LM140-05	
SG140-12	**IPS**	**IP140-12**	**3599**
	National	LM140-12	
SG140-15	**IPS**	**IP140-15**	**3599**
	National	LM140-15	
SG143	Datel	AM-464-2M	
	Exar	XR1527A	
	Harris	HA-2640	
		LM143	
	Motorola	**MC1536**	**3616**
	National	LM143	
		LM1536	
	SiliconG	SG1536	
SG1436	Datel	AM-464-2	
	Harris	HA-2645	
		LM343	
	Motorola	**MC1436**	**3616**
		MC1439	**3615**
	National	LM1436	
		LM343	
	SiliconG	SG343	
	TeledyneP	1332	
◆SG1456	**Datel**	**AM-460-2**	**3163**
	Elantec	**EHA2605**	**3538**
	Harris	HA-2605	
	Motorola	**MC1456**	**3616**
	TI	MC1456	
◆SG1458	Exar	XR4558	
	Fairchild	μA4558	
	Motorola	**MC4558**	**3617**
	National	LM1458	
	Raytheon	RC4558	
	TI	RC4558	
SG1468	Exar	XR1468	
		XR4195	
	Motorola	**MC1468**	**3627**
	Raytheon	RC4195	
	SiliconG	SG2501A	
		SG3501A	
		SG4501	
SG1489A	**Exar**	**XR1489A**	**3561**
	Fairchild	UA150	
		UA212A	
		μA1489A	
	Motorola	**MC1489A**	**3211,3212**
	National	DS1489A	
	SGS	MC1489	
	Signetics	**MC1489A**	**3720,3726**
	TI	MC1489A	
		SN75189A	
SG1495	Motorola	MC1495	
SG1496	Fairchild	μA796	
	Motorola	MC1496	
	National	LM1496	
	Plessey	SL1496	
	Signetics	**MC1496**	**3722**
SG150	**IPS**	**IP150**	**3599**
	LinearTech	LM150	
	Motorola	**LM150**	**3625**
	National	LM150	
	Unitrode	UC150	
SG1501A	Exar	XR1568	
	Motorola	**MC1568**	**3627**
	Raytheon	RM4195	
	SiliconG	SG1568	
SG1503	AD	AD580	
	Motorola	**MC1503**	**3628**
SG1524	Cherry	CS1524	
	Exar	**XR1524**	**3558**
	IPS	**IP1524**	**3599**
	LinearTech	LT1524	
	National	LM1524	
	RCA	CA1524	
	SGS	SG1524	
		UC1524A	
	Sprague	ULS-8124	
	TI	**SG1524**	**720**
	Unitrode	**UC1524A**	**3739,3739**
SG1525A	Cherry	CS1525A	
	Exar	**XR1525A**	**3559**
SG1525A	**IPS**	**IP1525A**	**3599**
	LinearTech	LT1525A	
	Motorola	**SG1525A**	**3626**
	SGS	SG1524A	
	Siliconix	PWM125	
	Sprague	ULS-8125	
	TI	SG1525A	
	Unitrode	**UC1525A**	**3739**
SG1526	**IPS**	**IP1526**	**3599**
	Motorola	**SG1526**	**3626**
		SG3526	**3626**
	Sprague	ULN8126	
		ULQ8126	
		ULS8126	
	Unitrode	UC1526	
SG1527	SGS	SG1527	
	Sprague	ULS-8127	
	Unitrode	**UC1527A**	**3739**
SG1527A	Cherry	CS1527A	
	IPS	IP1527A	
	LinearTech	LT1527A	
	Motorola	**SG1527A**	**3626**
	SGS	SG1527A	
	Siliconix	PWM27	
	Sprague	ULS-8125	
	TI	SG1527A	
	Unitrode	**UC1527A**	**3739**
SG1532	Unitrode	UC1532	
		UC1544	**3740**
SG1536	Datel	AM-464-2M	
	Exar	XR1527A	
	Harris	HA-2640	
		LM143	
	Motorola	**MC1536**	**3616**
	National	LM143	
		LM1536	
	SiliconG	SG143	
SG1543	**Exar**	**XR1543**	**3559**
SG1544	IPS	IP1544	
◆SG1556	**Elantec**	**EHA2600**	**3538**
	Fairchild	μA741	
	Harris	HA-2600	
	Motorola	**MC1556**	**3616**
	TeledyneP	1326	
	TI	MC1556	
SG1568	Exar	XR1568	
	Motorola	**MC1568**	**3627**
	Raytheon	RM4195	
	SiliconG	SG1501A	
SG1595	Motorola	MC1595	
SG1596	Motorola	MC1596	
	National	LM1596	
	Signetics	MC1596	
SG1840	SGS	UC1840	
	Unitrode	**UC1840**	**3739**
SG2001	Exar	XR2001	
		XR2001C	
		XR2201C	
	Mitsubishi	M54524	
	Motorola	**MC1411**	**3212**
		ULN2001	**3212**
	NEC	μPA2001	
	RIFA	PBD3523-11	
	Sanyo	LB1231	
	SGS	L201	
		ULN2001	
	Sprague	**ULN-2001**	**3269**
		ULQ-2001	
	TI	ULN2001A	
	Toshiba	TD62001	
		TD62101	
SG2002	Exar	XR2002C	
		XR2202C	
	Fairchild	MC1412	
	Mitsubishi	M54525	
	Motorola	**MC1412**	**3212**
		ULN2002	**3212**
	NEC	μPA2002	
	RIFA	PBD352304	
	Sanyo	LB1232	
	SGS	L202	
		ULN2002	
	Signetics	NE5602	
	Sprague	ULN-2002	
	TI	ULN2002A	
	Toshiba	TD62002	
SG2003	Exar	XR2003C	
		XR2203C	
	Fairchild	MC1413	
	Mitsubishi	M54523	
	Motorola	**MC1413**	**3212**
		ULN2003	**3212**

(Continued)

◆ Discontinued

Bold face device numbers indicate manufacturers data is provided in the IC Master on the pages noted.

Silicon General (Cont'd)

Manufacturer Device	Replacement Source	Device	IC Master Page
SG2003	NEC	μPA2003	
	RIFA	PBD352303	
	Sanyo	LB1233	
	SGS	L203	
		ULN2003	
	Signetics	NE5603	
		ULN2003	**3721**
	Sprague	ULN-2003	
	Telefunken	TDA2003	
	TI	ULN2003A	
	Toshiba	TD62003	
		TD62103	
SG2004	Exar	XR2204C	
	Mitsubishi	M54526	
	Motorola	**MC1416**	**3212**
		ULN2004	**3212**
	NEC	μPA2004	
	RIFA	PBD352302	
	Sanyo	LB1234	
	SGS	L204	
		ULN2004	
	Signetics	NE5604	
		ULN2004	**3721**
	Sprague	ULN-2004	
		ULS-2004	
	TI	ULN2004A	
	Toshiba	TD62004	
		TD62104	
SG201	National	LM748	
	SGS	LM748	
		LS148	
	TI	LM201	
		SN72748P	
		μA748	
	ThomsonCSF	LM201	
		LM748	
SG2011	Exar	XR2011C	
	Sprague	ULN-2011	
SG2012	Sprague	ULS-2012	
SG2013	Exar	XR2013C	
	Sprague	ULN-2013	
SG2014	Exar	XR2014C	
	Sprague	ULN-2014	
SG2022	RIFA	PBD3524-14	
	SiliconG	SG2002	
	Sprague	ULN-2022	
		ULS-2002	
	TI	SN75467	
SG2023	Exar	XR2003	
	Motorola	MC1413T	
	RIFA	PBD3523-13	
	Sprague	ULN-2023	
		ULQ-2003	
	TI	SN75468	
SG2024	RIFA	PBD352312	
	Sprague	ULN-2024	
	TI	SN75469	
SG204	National	LM204	
	ThomsonCSF	LM204	
SG211	AD	AD211	
	Motorola	**LM211**	**3631**
	National	LM211	
	RCA	LM211	
	Signetics	**LM211**	**3725**
	TI	LM211	
	ThomsonCSF	LM211	
SG217	**IPS**	**IP217**	**3599**
	MCE	MCE-LM217	
	Motorola	**LM217**	**3625**
	National	LM217	
	TI	LM217	
	ThomsonCSF	TDE0117	
	Unitrode	UC217	
SG220-05	National	LM220-05	
SG220-12	**IPS**	**IP220-12**	**3599**
	National	LM220-12	
SG220-15	**IPS**	**IP220-15**	**3599**
	National	LM220-15	
SG220-18	National	LM220-18	
SG220-20	National	LM220-20	
SG220-5	**IPS**	**IP220-5**	**3599**
SG223	Fairchild	SH223	
		μA223	
	IPS	**IP223**	**3599**
	Lambda	LLM223	
	Motorola	**LM223**	**3622**
	National	LM223	
	ThomsonCSF	TDE0123	
SG238	**IPS**	**IP238**	**3599**
◆SG239	Fairchild	UA250	
		UA26LS31	
		UA26LS32	
		μA239	
	Motorola	**LM239**	**3631**
	National	LM239	
	PMI	CMP-04	
		PM239	
	Raytheon	LM239	
	RCA	**CA239**	**3672,3677**
	Signetics	LM239	
	TI	LM239	
	ThomsonCSF	TDE0139	
◆SG239A	AMD	LM239A	
	Motorola	**LM239A**	**3631**
	National	LM239A	
	PMI	CMP-04	
	RCA	**CA239A**	**3672,3677**
SG240-06	National	LM240-06	
SG240-08	National	LM240-08	
SG240-12	National	LM240-12	
SG240-15	National	LM240-15	
SG240-18	National	LM240-18	
SG240-20	National	LM240-20	
SG240-24	National	LM240-24	
SG250	**IPS**	**IP250**	**3599**
	Motorola	**LM250**	**3625**
	National	LM250	
	Unitrode	UC250	
SG2501A	Exar	XR1468	
		XR4195	
	Motorola	**MC1468**	**3627**
	Raytheon	RC4195	
	SiliconG	SG1468	
		SG3501A	
		SG4501	
SG2507A	SGS	SG2527A	
SG2524	Cherry	CS2524	
	Exar	XR2524	
	IPS	**IP2524**	**3599**
	RCA	CA2524	
	SGS	SG2524	
		UC2524A	
	Sprague	ULQ-8124	
	TI	SG2524	
	Unitrode	**UC2524A**	**3739,3739**
SG2525A	Cherry	CS2525A	
	Exar	XR2525A	
	IPS	**IP2525A**	**3599**
	LinearTech	LT2525A	
	Motorola	**SG2525A**	**3626**
	Siliconix	PWM25B	
	Sprague	ULQ-8125	
	TI	SG2525A	
	Unitrode	**UC2525A**	**3739**
SG2526	**IPS**	**IP2526**	**3599**
	Motorola	**SG2526**	**3626**
	Sprague	ULQ-8126	
	Unitrode	UC2526	
SG2527A	Cherry	CS2527A	
	Exar	XR2527A	
	IPS	IP2527A	
	LinearTech	LT2527A	
	Motorola	**SG2527A**	**3626**
	TI	SG2527A	
	Unitrode	**UC2527A**	**3739**
SG2532	Hitachi	HN462532	
	National	MM2532	
		NMC2532	
		TDA2530	
		TDA2532	
	Plessey	TDA2530	
	Siemens	TDA2530	
SG2543	Exar	XR2543	
	IPS	IP2543	
SG2544	IPS	IP2544	
SG2840	SGS	UC2840	
	Unitrode	**UC2840**	**3739**
◆SG2841	Motorola	UDN2841	
	Sprague	UDN-2841	
	TI	UDN2841	
SG3001	Hitachi	HA1110	
	RCA	CA3001	
SG301	AD	AD301	
	Fairchild	μA301A	
	Intersil	AD301	
	LinearTech	LM301	
		LM301A	
	Motorola	LM301	
	National	LM301	
		LM301A	
SG301	NEC	μPC157	
		μPC301	
	Raytheon	LM301	
	RCA	CA301	
		LM301	
	TI	LM301	
		LM301A	
	ThomsonCSF	LM301A	
	Toshiba	TA7506	
SG304	National	LM304	
	NEC	μPC142	
	ThomsonCSF	LM304	
SG3046	Fairchild	UA3046	
	Motorola	**MC3346**	**3614**
	National	LM3046	
	Plessey	SL3046	
		SL3146	
	RCA	**CA3046**	**3678**
		CA3146	**3678**
	Sanyo	LA3046	
	SGS	CA3046	
		TBA331	
	SiliconG	SG3146	
		SG3821	
	Sprague	ULN-2046	
	ThomsonCSF	SFC	
◆SG3058	RCA	CA3058	
◆SG3059	Motorola	CA3059	
	RCA	CA3059	
◆SG3079	Motorola	CA3079	
	RCA	CA3079	
◆SG308	AD	AD308	
	Burr-Brown	3500	
		3501	
	Fairchild	μA308	
	Intersil	AD308	
		LM308	**3600,3601**
	MicroPwr	**MP308**	**3607**
	Motorola	**LM308**	**3615**
	National	LM308	
	Raytheon	LM308	
◆SG3081	**RCA**	**CA3081**	**3678**
	Sprague	ULN-2081	
◆SG3082	**RCA**	**CA3082**	**3678**
	Sprague	ULN-2082	
SG3083	**RCA**	**CA3083**	**3678**
		CA3183	**3678**
	SiliconG	SG3183	
	Sprague	ULN-2083	
SG3086	Fairchild	UA3086	
	Motorola	**MC3386**	**3614**
	National	LM3086	
	Plessey	SL3086	
	RCA	**CA3086**	**3678**
	Sanyo	LA3086	
	SiliconG	SG3886	
	Sprague	ULN-2086	
	ThomsonCSF	SFC2086	
SG311	AD	AD311	
	Fairchild	μA311	
	LinearTech	LM311	
	Motorola	**LM2903**	**3631**
		LM311	**3631**
	National	LM2903	
		LM311	
	NEC	μPC271	
		μPC311	
	Raytheon	LM311	
	RCA	**CA311**	**3672,3677**
		LM311	
	SGS	LM2903	
		LM311	
	Signetics	**LM2903**	**3725**
		LM311	**3721**
	TI	LM2903	
		LM311	
	ThomsonCSF	LM2903	
		LM311	
		SFC3111	
SG3146	Fairchild	UA3046	
	Motorola	**MC3346**	**3614**
	National	LM3046	
	Plessey	SL3046	
		SL3146	
	RCA	**CA3046**	**3678**
		CA3146	**3678**
	Sanyo	LA3046	
	SGS	CA3046	
		TBA331	
	SiliconG	SG3046	
		SG3821	
SG3146	Sprague	ULN-2046	
	ThomsonCSF	SFC	
SG317	Fairchild	μA317	
	IPS	**IP317**	**3599**
	LinearTech	LM317	
	MCE	MCE-LM317	
	Motorola	**LM317**	**3625**
	National	LM317	
	SGS	LM317	
	TI	LM317	
	ThomsonCSF	LM317	
		TDB0117	
	Unitrode	UC317	
SG3183	**RCA**	**CA3083**	**3678**
		CA3183	**3678**
	SiliconG	SG3083	
	Sprague	ULN-2083	
SG320-05	Fairchild	μA7905	
		μA79M05	
	IPS	**IP120-5**	**3599**
		IP320-5	**3599**
		IP7905	**3599**
	Lambda	LμA7905	
	National	LM320MP5	
		LM7905	
		LM79M05	
	NEC	μPC7905	
	SiliconG	SG120-5	
		SG320P-5	
	TI	μA7905	
	Unitrode	UC7905	
SG320-08	National	LM320-08	
SG320-15	Fairchild	μA7915	
	IPS	**IP320-15**	**3599**
		IP7915	**3599**
	Motorola	MC7915	
	National	LM320-15	
		LM320T15	
		LM7915	
	NEC	μPC7915	
	SGS	L7915	
	SiliconG	SG7915	
	TI	LM320-5	
		μA7915	
	ThomsonCSF	μA7915	
	Samsung	MC7915	
	Unitrode	UC7915	
SG320-18	National	LM320-18	
SG320-20	National	LM320-20	
SG320-5	**IPS**	**IP120-5**	**3599**
	Motorola	MC7952	
	National	LM320-5	
	SGS	L7952	
	TI	LM320-5	
	ThomsonCSF	TDB2905	
SG320P-12	Fairchild	μA7912	
		μA79M12	
	IPS	**IP320-12**	**3599**
		IP7912	**3599**
	Motorola	MC7912	
	National	LM320MP12	
		LM7912	
		LM79M12	
	NEC	μPC7912	
	SGS	L7912	
	SiliconG	SG7912	
	TI	LM320-12	
		μA7912	
	ThomsonCSF	μA7912	
	Samsung	MC7912	
	Unitrode	UC7912	
SG320P-5	Fairchild	μA7905	
		μA79M05	
	IPS	**IP120-5**	**3599**
		IP320-5	**3599**
		IP7905	**3599**
	Lambda	LμA7905	
	National	LM320MP5	
		LM7905	
		LM79M05	
	NEC	μPC7905	
	SiliconG	SG120-5	
		SG320-05	
	TI	μA7905	
	Unitrode	UC7905	
SG323	Fairchild	SH0323	
		SH323	
		μA323	
		μA78H05	
	IPS	IP123-5	
		IP323	**3599**
	Lambda	LAS1405	

(Continued)

◆ Discontinued

The manufacturers report their devices can be used as direct replacements.
Performance details often differ, so compare the specifications considering your requirements.

Silicon General (Cont'd)

Manufacturer Device	Replacement Source	Device	IC Master Page
SG323	Lambda	LAS1905	
	LinearTech	LM323	
	Micropac	M78H05	
	Motorola	**LM323**	3622
		MC78T05C	3622
	ThomsonCSF	LM323	
SG323A	National	LM323A	
SG324A	Cypress	CY7C901	
	Fairchild	µA2901	
		µA3302	
	Motorola	**LM2901**	3631
		MC3302	3631
	National	LM2901	
		LM3302	
	NEC	µPC2901	
	PMI	CMP-04	
	Raytheon	LM2901	
		RC3302	
	RCA	CA3302	
	SGS	LM2901	
		MC3302	
	Signetics	**LM2901**	3721,3722
		MC3302	3721
	TI	LM2901	
		LM3302	
	ThomsonCSF	LM2901	
◆SG3302	Cypress	CY7C901	
	Fairchild	µA2901	
		µA3302	
	Motorola	**LM2901**	3631
		MC3302	3631
	National	LM2901	
		LM3302	
	NEC	µPC2901	
	PMI	CMP-04	
	Raytheon	LM2901	
		RC3302	
	RCA	CA3302	
	SGS	LM2901	
		MC3302	
	Signetics	**LM2901**	3721,3722
		MC3302	3721
	SiliconG	SG324A	
	TI	LM2901	
		LM3302	
	ThomsonCSF	LM2901	
SG337	**IPS**	**IP337**	3599
	LinearTech	LM337	
	MCE	MCE-LM337	
	Motorola	**LM337**	3625
	National	LM337	
	TI	LM337	
	ThomsonCSF	TDB0137	
	Unitrode	UC337	
SG337HV	National	LM337HV	
SG338	**IPS**	**IP338**	3599
◆SG339	AMD	LM339A	
	Fairchild	µA339	
	Hitachi	HA17901	
	Motorola	**LM339**	3631
	National	LM339	
	NEC	µPC339	
	PMI	CMP-04	
		PM339A	
	Raytheon	LM339	
	RCA	**CA339**	3672,3677
		CA339A	3672,3677
		LM339	
	SGS	LM339	
	TI	LM339	
	ThomsonCSF	LM339	
		TDB0139	
SG340-12	Fairchild	µA7812	
	IPS	**IP140-12**	3599
		IP340-12	3599
		IP7812	3599
	Lambda	LMC7812	
		LµA7812	
	Motorola	**MC7812**	3623
	National	LM7812	
	NEC	µPC7812	
	SGS	L7812	
	SiliconG	SG7812	
	TI	µA7812	
	Toshiba	TA78012	
	Samsung	MC7812	
	Unitrode	UC7812	
SG340-15	Fairchild	µA7815	
		µA78L15	
	IPS	**IP140-15**	3599
			(Continued)
SG340-15	**IPS**	**IP340-15**	3599
		IP7815	3599
	Lambda	LAS1515	
		LMC7815	
		LµA7815	
	Motorola	**MC7815**	3624
		MC78L15	
	National	LM340-15	
		LM340LA-15	
		LM340T-15	
		LM7815	
		LM78L15	
	NEC	µPC7815	
		µPC78L15	
	SGS	L7815	
	SiliconG	SG7815	
	TI	LM340-15	
		µA7815	
		µA78L15	
	ThomsonCSF	µA7815	
	Toshiba	TA78015	
	Samsung	MC7815	
	Unitrode	UC7815	
SG340-18	Lambda	LMC7818	
	NEC	µPC7818	
	SiliconG	SG7818	
	TI	LM340-18	
		µA7818	
	ThomsonCSF	µA7818	
SG340-20	National	LM340-20	
SG340-24	National	LM340-24	
SG340-6	Lambda	LMC7806	
		LµA7806	
	Motorola	**MC7806**	3623
	SiliconG	SG7806	
	TI	µA7806	
	ThomsonCSF	µA7806	
	Samsung	MC7806	
SG340-8	Lambda	LMC7808	
		LµA7808	
	Motorola	**MC7808**	3623
	NEC	µPC7808	
	SiliconG	SG7808	
	TI	µA7808	
	ThomsonCSF	µA7808	
	Samsung	MC7808	
SG3423	**Motorola**	**MC3423**	3620
	TI	MC3423	
SG343	Datel	AM-464-2	
	Harris	HA-2645	
		LM343	
	Motorola	**MC1436**	3616
		MC1439	3615
	National	LM1436	
		LM343	
	SiliconG	SG1436	
	TeledyneP	1332	
SG350	Fairchild	µA78HGA	
	IPS	**IP350**	3599
	Lambda	LAS14U	
		LAS19U	
	LinearTech	LM350	
	Motorola	**LM350**	3625
	National	LM350	
	TI	LM350	
SG3501A	Exar	XR1468	
		XR4195	
	Motorola	**MC1468**	3627
	Raytheon	RC4195	
	SiliconG	SG1468	
		SG2501A	
		SG4501	
SG3503	**AD**	**AD1403**	3136
	LinearTech	LT1009	
	Motorola	**MC1403**	3628
	SiliconG	SG3505	
SG3505	**AD**	**AD1403**	3136
	LinearTech	LT1009	
	Motorola	**MC1403**	3628
	SiliconG	SG3503	
SG3523	**Motorola**	**MC3523**	3620
	TI	MC3523	
SG3524B	Cherry	CS3524	
	Exar	**XR3524**	3558
	IPS	**IP3524**	3599
		IP3524B	3599
	National	LM3524	
	RCA	CA3524	
	SGS	SG3524	
		UC3524A	
	Signetics	**SG3524**	3715,3720,3730
			(Continued)
SG3524B	Sprague	ULN-8124	
	TI	SG3524	
	Unitrode	**UC3524A**	3739,3739
SG3525A	Exar	XR3525A	
	IPS	**IP3525A**	3599
	LinearTech	LT3525A	
	Motorola	**SG3525A**	3626
	SGS	SG3525A	
	Siliconix	PWM25	
	TI	SG3525A	
	Unitrode	**UC3525A**	3739
SG3526	**IPS**	**IP3526**	3599
	Sprague	ULN-8126	
	Unitrode	UC3526	
SG3527A	Cherry	CS3527	
		CS3527A	
	Exar	**XR3527A**	3559
	IPS	**IP3527**	3599
	LinearTech	LT3527A	
	Motorola	**SG3527A**	3626
	SGS	SG3527A	
	TI	SG3527A	
SG3532	AMD	AM9232	
	CSG	MPS2332	
	Fairchild	F3532	
	GI	R03-9332	
	GouldAMI	S2333	
		S68A332	
	GTEMicro	G2332	
	Hitachi	HN46332	
	Intech	IM7332	
	Intel	2332	
	Mitsubishi	M58333	
	Motorola	**MCM68A332**	4120
	National	NM52132	
	NCR	NCR2332	
	NEC	UPD2332A	
	Panasonic	MN2332	
	RCA	**CDM5333**	1673,1677
	Rockwell	R2332	
	SGS	M2332	
	Sharp	LH2332	
	Siemens	SA88332	
		SAB8332	
	Signetics	2332	
		2632A	
	SSS	SCM23C32	
	SMC	ROM4732	
	Supertex	23SC32	
		CM3200	
	Synertek	SY2332	
	TI	TM2332	
		TMS2332	
		TMS4732	
	Toshiba	TMM2332	
		TMM333P	
	VTI	VT2332	
SG3543	Exar	XR3543	
	IPS	IP3543	
SG3544	IPS	IP3544	
SG3635	Sprague	UDN-2935	
SG3638	**Sprague**	**UDN-2976W**	3269
SG3643	**Sprague**	**UDN-2976W**	3269
SG3821	Fairchild	UA3046	
	Motorola	**MC3346**	3614
	National	LM3046	
	Plessey	SL3046	
		SL3146	
	RCA	**CA3046**	3678
		CA3146	3678
	Sanyo	LA3046	
	SGS	CA3046	
		TBA331	
	SiliconG	SG3046	
		SG3146	
	Sprague	ULN-2046	
	ThomsonCSF	SFC	
◆SG3822	Fairchild	UA3054	
	Motorola	**CA3054**	3614
	National	LM3054	
	RCA	**CA3054**	3678
	Sprague	ULN-2054	
	ThomsonCSF	SFC2054	
SG3851	Sprague	ULS-2011	
	SSS	SCM6113	
SG3852	Exar	XR2012C	
	Sprague	ULN-2012	
SG3854	Sprague	ULS-2041	
SG3886	Fairchild	UA3086	
	Motorola	**MC3386**	3614
			(Continued)
SG3886	National	LM3086	
	Plessey	SL3086	
	RCA	**CA3086**	3678
	Sanyo	LA3086	
	SiliconG	SG3086	
	Sprague	ULN-2086	
	ThomsonCSF	SFC2086	
◆SG4136	Exar	XR4136M	
	Raytheon	RM4136	
	TI	**RM4136**	719
◆SG4194	Exar	XR4194	
	MCE	MCE-4194	
	Raytheon	RC4194	
		RM4194	
◆SG4250	Harris	HA-2720	
	Intersil	ICL7611	
		ICL8021	
		LM4250	
	Maxim	ICL7611	
	Motorola	**MC1776**	3616
	National	LF441	
		LM4250	
	PMI	OP20	
		OP21	
		OP22	
	SGS	MC1776	
	Solitron	UC4250	
	TI	TLC251	
		TLC271	
	ThomsonCSF	µA776	
SG4501	Exar	XR1468	
		XR4195	
	Motorola	**MC1468**	3627
	Raytheon	RC4195	
	SiliconG	SG1468	
		SG2501A	
		SG3501A	
◆SG55138	**TI**	**SN55138**	721
◆SG55154	**TI**	**SN55154**	722
◆SG5520	National	LM5520	
	TI	SN5520	
◆SG5521	National	LM5521	
◆SG5522	Motorola	MC5522	
		MC5523	
	National	LM5522	
	TI	SN5522	
◆SG5523	National	LM5523	
◆SG5524	Fairchild	MC5524	
	Motorola	MC5524	
	National	LM5524	
	Raytheon	RM5524	
	TI	SN5524	
◆SG5525	Fairchild	MC5525	
	Motorola	MC5525	
	National	LM5525	
◆SG5528	Fairchild	MC5528	
	Motorola	MC5528	
	National	LM5528	
◆SG5529	Fairchild	MC5529	
	Motorola	MC5529	
	National	LM5529	
SG55325	Motorola	MC55325	
	National	DS55325	
	TI	**SN55325**	722
SG55326	**TI**	**SN55326**	722
SG55327	Motorola	MC75325	
	National	DS75325	
	SiliconG	SG75325	
	TI	**SN55327**	722
		SN75325	
◆SG5534	Fairchild	MC5534	
	Motorola	MC5534	
	National	LM5534	
◆SG5535	Motorola	MC5535	
	National	LM5535	
◆SG5538	National	LM5538	
◆SG5539	Motorola	MC5539	
	National	LM5539	
SG55450	Signetics	55450	
	TI	SN55450	
SG55451	Fairchild	55451	
	National	DS55451	
	Signetics	55451	
	TI	SN55451	
SG55452	National	DS55452	
	Signetics	55452	
	TI	SN55452	
SG55453	Fairchild	55453	
	National	DS55453	
		LM55453	
	Signetics	55453	
	TI	SN55453	

◆ Discontinued

Bold face device numbers indicate manufacturers data is provided in the IC Master on the pages noted.

ALTERNATE SOURCE DIRECTORY

Silicon General (Cont'd)

Manufacturer Device	Replacement Source	Device	IC Master Page
SG55454	National	DS55454	
	Signetics	55454	
	TI	SN55454	
SG55460	National	DS55460	
SG55461	National	DS55461	
	TI	**SN55461**	**722**
SG55462	National	DS55462	
	TI	**SN55462**	**722**
SG55463	National	DS55463	
	TI	**SN55463**	**722**
SG55464	National	DS55464	
	TI	**SN55464**	**722**
SG55471	**TI**	**SN55471**	**722**
SG55472	**TI**	**SN55472**	**722**
SG55473	**TI**	**SN55473**	**722**
SG55474	**TI**	**SN55474**	**722**
◆SG555	Exar	XR555	
	Fairchild	μA555	
	Hitachi	HA17555	
	Intersil	NE555	
	Mitsubishi	M51841	
		M51848	
		M5251	
		M5E555	
	Motorola	MC1455	
	NEC	μPC1555	
	Raytheon	RC555	
	RCA	CA555	
	Sanyo	LB8555	
	SGS	NE555	
	Signetics	**NE555**	**3721**
		NE555N	
	TI	NE555	
	ThomsonCSF	LM555	
	Samsung	**NE555**	**3679**
◆SG6118	Dionics	DI513B	
		DI514B	
	Exar	**XR6118**	**3554**
	OKI	MSL912	
	Sanyo	LB1290	
	Signetics	**NE594**	**3726**
	Sprague	**UDN-6118**	**3269**
	Toshiba	TD62781	
SG723	Fairchild	μA723	
	Hitachi	HA17723	
	Intersil	LM723	
	Motorola	**MC1723**	**3625**
	National	LM723	
	Raytheon	RC723	
		RM723	
	RCA	CA723	
		LM723	
	SGS	L123	
		LM723	
	Signetics	**μA723**	**3721,3730**
	TI	μA723	
	ThomsonCSF	LM723	
◆SG733	Fairchild	μA733	
	Hitachi	HA17733	
	Intersil	μA733	
	Motorola	**MC1733**	**3616**
		NE592	
	National	LM733	
	Signetics	**μA733**	**3721,3729**
	TI	μA733	
◆SG747	AMD	747	
	Fairchild	μA747	
	Hitachi	HA17747	
	MicroPwr	MPOP04	
	Motorola	**MC1747**	**3617**
	National	LM747	
	NEC	μPC251	
	PMI	**OP-04**	**3636**
		PM747	
	Raytheon	RC747	
		RM747	
	RCA	**CA747**	**3672**
	Signetics	**μA747**	**3721**
	TeledyneS	747	
	TI	μA747	
◆SG748	National	LM748	
	SGS	LM748	
		LS148	
	SiliconG	SG201	
	TI	LM201	
		SN72748P	
		μA748	
	ThomsonCSF	LM201	
		LM748	
◆SG75138	TI	SN75138	
◆SG75154	Fairchild	75154	
	National	DS75154	
	TI	SN75154	
◆SG7520	Fairchild	7520	
	Motorola	MC7520	
	TI	SN7520	
◆SG7521	Fairchild	7521	
	Motorola	MC7521	
	National	LM7521	
	TI	SN7521	
◆SG7522	Motorola	MC7522	
	TI	SN7522	
◆SG7523	Motorola	MC7523	
	National	LM7523	
	Raytheon	RC7523	
	TI	SN7523	
SG75236	TI	SN75236	
◆SG7524	Fairchild	75S24	
	Motorola	MC7524	
	National	DS75S24	
	Signetics	7524	
	TI	SN75224	
		SN7524	
◆SG7525	Fairchild	7525	
	Motorola	MC7525	
	National	LM7525	
◆SG7528	Motorola	MC7528	
	Raytheon	RC7528	
	TI	SN7528	
	ThomsonCSF	SFC2528	
◆SG7529	Fairchild	7529	
	Motorola	MC7529	
	National	LM7529	
	Raytheon	RC7529	
SG75325	Motorola	MC75325	
	National	DS75325	
	SiliconG	SG55327	
	TI	**SN55327**	**722**
		SN75325	
SG75326	TI	SN75326	
SG75327	TI	SN75327	
◆SG7534	Motorola	MC7534	
◆SG7535	Motorola	MC7535	
	National	LM7535	
◆SG7538	Fairchild	7538	
	Motorola	MC7538	
	National	LM7538	
◆SG7539	Fairchild	7539	
	Motorola	MC7539	
	National	LM7539	
SG75450	Fairchild	75450	
	National	DS75450	
SG75451	Fairchild	75451	
	National	DS75451	
SG75452	Fairchild	75452	
	National	DS75452	
	TI	SN75452B	
SG75453	Fairchild	75453	
	Motorola	MC75453	
	National	DS75453	
		LM75453	
	TI	SN75453B	
SG75454	National	DS75454	
	TI	SN75454B	
SG75460	Motorola	MC75460	
	National	DS75460	
	TI	SN75460	
SG75461	Fairchild	75461	
	Motorola	MC75401	
	National	DS75461	
	TI	SN75461	
SG75462	Fairchild	75462	
	Motorola	MC75402	
	National	DS75462	
	TI	SN75462	
SG75463	Motorola	MC75403	
	National	DS75463	
	TI	SN75463	
SG75464	Motorola	MC75404	
	National	DS75464	
		SG75464	
	TI	SN75464	
SG75470	TI	SN75470	
SG75473	TI	SN75473	
SG75474	Hitachi	HD74HC10	
	Motorola	**MC74HC10**	**1122**
	National	MM74HC10	
	RCA	**CD74HC10**	**1149**
	SPI	SP74HC10	
	SGS	M74HC10	
	Signetics	**74HC10**	**1156**
	TI	SN74HC10	

(Continued)

Manufacturer Device	Replacement Source	Device	IC Master Page
SG75474	**Toshiba**	**TC40H010**	**1363**
	Universal	US74HC10	
SG7805	**IPS**	**IP7805**	**3599**
	National	LM340-5	
	Samsung	MC7805	
	Unitrode	UC7805	
SG7806	Lambda	LMC7806	
		LμA7806	
	Motorola	**MC7806**	**3623**
	SiliconG	SG340-6	
	TI	μA7806	
	ThomsonCSF	μA7806	
	Samsung	MC7806	
SG7808	Lambda	LMC7808	
		LμA7808	
	Motorola	**MC7808**	**3623**
	NEC	μPC7808	
	SiliconG	SG340-8	
	TI	μA7808	
	ThomsonCSF	μA7808	
	Samsung	MC7808	
SG7812	Fairchild	μA7812	
	IPS	**IP140-12**	**3599**
		IP340-12	**3599**
		IP7812	**3599**
	Lambda	LMC7812	
		LμA7812	
	Motorola	**MC7812**	**3623**
	National	LM7812	
	NEC	μPC7812	
	SGS	L7812	
	SiliconG	SG340-12	
	TI	μA7812	
	Toshiba	TA78012	
	Samsung	MC7812	
	Unitrode	UC7812	
SG7815	Fairchild	μA7815	
		μA78L15	
	IPS	**IP140-15**	**3599**
		IP340-15	**3599**
		IP7815	**3599**
	Lambda	LAS1515	
		LMC7815	
		LμA7815	
	Motorola	**MC7815**	**3624**
		MC78L15	
	National	LM340-15	
		LM340LA-15	
		LM340T-15	
		LM7815	
		LM78L15	
	NEC	μPC7815	
		μPC78L15	
	SGS	L7815	
	SiliconG	SG340-15	
	TI	LM340-15	
		μA7815	
		μA78L15	
	ThomsonCSF	μA7815	
	Toshiba	TA78015	
	Samsung	MC7815	
	Unitrode	UC7815	
SG7818	Lambda	LMC7818	
	NEC	μPC7818	
	SiliconG	SG340-18	
	TI	LM340-18	
		μA7818	
	ThomsonCSF	μA7818	
SG7820	Motorola	MC7820	
SG7824	Lambda	LMC7824	
		LμA7824	
	Motorola	**MC7824**	**3624**
	NEC	μPC7824	
	SGS	L7824	
	TI	LM340-24	
		μA7824	
	ThomsonCSF	μA7824	
	Samsung	MC7824	
SG7905	Fairchild	MC7905	
	Lambda	LMC7905	
	Motorola	MC7905	
	SGS	L7905	
	Samsung	MC7905	
SG7908	Fairchild	MC7908	
		μA7908	
		μA79M08	
	Lambda	LMC7908	
		LμA7908	
	Motorola	MC7908	
	SGS	L7908	
	TI	μA7908	

(Continued)

Manufacturer Device	Replacement Source	Device	IC Master Page
SG7908	TI	μA79M08	
	Samsung	MC7908	
SG7912	Fairchild	μA7912	
		μA79M12	
	IPS	**IP320-12**	**3599**
		IP7912	**3599**
	Motorola	MC7912	
	National	LM320MP12	
		LM7912	
		LM79M12	
	NEC	μPC7912	
	SGS	L7912	
	SiliconG	SG320P-12	
	TI	LM320-12	
		μA7912	
	ThomsonCSF	μA7912	
	Samsung	MC7912	
	Unitrode	UC7912	
SG7915	Fairchild	μA7915	
	IPS	**IP320-15**	**3599**
		IP7915	**3599**
	Motorola	MC7915	
	National	LM320-15	
		LM320T15	
		LM7915	
	NEC	μPC7915	
	SGS	L7915	
	SiliconG	SG320-15	
	TI	LM320-5	
		μA7915	
	ThomsonCSF	μA7915	
	Samsung	MC7915	
	Unitrode	UC7915	
SG7918	Motorola	MC7918	
	SGS	L7918	
	TI	μA7918	
	Samsung	MC7918	
SM600	Unitrode	PIC600	
SM601	Unitrode	PIC601	
SM602	Unitrode	PIC602	
SM610	Unitrode	PIC610	
SM611	Unitrode	PIC611	
SM612	Unitrode	PIC612	
SM625	Unitrode	PIC625	
SM626	Unitrode	PIC626	
SM627	Unitrode	PIC627	
SM637	Unitrode	PIC637	
SM645	Unitrode	PIC645	
SM646	Unitrode	PIC646	
SM647	Unitrode	PIC647	
SM655	Unitrode	PIC655	
SM656	IMI	MPY012	
	Unitrode	PIC656	
SM657	Unitrode	PIC657	

Silicon Systems Inc.

Manufacturer Device	Replacement Source	Device	IC Master Page
104	Fujitsu	MB4111	
105	Fujitsu	MB4112	
202	Sierra	SC11202	
203	Sierra	SC11203	
204	Sierra	SC11204	
SSI108	AD	AD108	
	Fairchild	μA108	
	Harris	LM108	
	Intersil	**LM108**	**3600,3601**
	LinearTech	LM108	
	MicroPwr	**MP108**	**688,3607**
	Motorola	**LM108**	**3615**
	National	LM108	
	PMI	PM108	
	SGS	M108	
	TI	LM108	
SSI117	Cherry	CS117	
SSI22100	Motorola	MC1452100	
	RCA	**CD22100**	**1147,1152**
	SGS	M22100	
SSI22101	**RCA**	**CD22101**	**1147,1152**
SSI22102	**RCA**	**CD22102**	**1147,1152**
SSI22301	**RCA**	**CD22301**	**1147,1152**
SSI3525	GouldAMI	S3525A	
		S3525B	
SSI8500	Motorola	MC8500	
SSI8502	Motorola	MC8502	
SSI8520	Motorola	MC8520	

◆ Discontinued

The manufacturers report their devices can be used as direct replacements.
Performance details often differ, so compare the specifications considering your requirements.

Siliconix

Manufacturer Device	Replacement Source	Device	IC Master Page
◆D123	Intersil	D123	
D125	Intersil	D125	
	TeledyneC	CDR125	
◆DF320	ITT	DF320	
	Mitel	MT4320	
◆DF321	ITT	DF321	
◆DF412	Hughes	HLCD7211	
	Intersil	ICL7211	
	RCA	**CD22104**	1147
	TeledyneS	TSC7211	
DG123	**Intersil**	**DG123**	3196
DG125	**Intersil**	**DG125**	3196
DG126	Intersil	DG126	
	National	AH0126	
DG129	Intersil	DG129	
	National	AH0129	
DG133	Intersil	DG133	
	National	AH0133	
DG134	Intersil	DG134	
	National	AH0134	
DG139	Intersil	DG139	
	National	AH0139	
DG140	Intersil	DG140	
	National	AH0140	
DG141	Intersil	DG141	
	National	AH0141	
DG142	Intersil	DG142	
	National	AH0142	
DG143	**Intersil**	**DG143**	3196
	National	AH0143	
DG144	Intersil	DG144	
	National	AH0144	
DG145	Intersil	DG145	
	National	AH0145	
DG146	Intersil	DG146	
	National	AH0146	
◆DG151	Intersil	DG151	
	National	AH0151	
◆DG152	Intersil	DG152	
	National	AH0152	
◆DG153	Intersil	DG153	
	National	AH0153	
◆DG154	Intersil	DG154	
	National	AH0154	
		AM0154	
◆DG161	Intersil	DG161	
	National	AH0161	
◆DG162	Intersil	DG162	
	National	AH0162	
◆DG163	Intersil	DG163	
	National	AH0163	
		AM0163	
◆DG164	Intersil	DG164	
	National	AH0164	
		AM0164	
DG172	**Intersil**	**DG118**	3196
DG180	Intersil	DG180	
DG181	Harris	HI381	
		HI5048	
	Intersil	DG181	
		IH5048	
	Siliconix	DG381A	
DG182	Intersil	DG182	
DG183	Intersil	DG183	
DG184	Harris	HI384	
		HI5049	
	Intersil	DG184	
		IH5049	
	Siliconix	DG384A	
DG185	Harris	HI5045	
	Intersil	DG185	
		IH5045	
	Siliconix	DG5045	
	TI	TL185	
DG186	Intersil	DG186	
DG187	Harris	HI387	
		HI5050	
	Intersil	DG187	
		IH5050	
	Siliconix	DG387A	
DG188	Harris	HI5042	
	Intersil	DG188	
		IH5042	
	Siliconix	DG5042	
DG189	Intersil	DG189	
DG190	Harris	HI5051	
	Intersil	DG190	
		IH5051	
DG191	Harris	HI5043	
	Intersil	DG191	
DG191	Intersil	IH5043	
	Siliconix	DG243	
		DG5043	
DG200A	AD	ADG200	
	Harris	HI200	
	Intersil	**DG200**	3196
		IH200	
		IH5200	3196
	MicroPwr	MP200	
	PMI	SW05	
DG201A	AD	ADG201	
	Harris	HI201	
	Intersil	DG201	
		IH201	
		IH5201	
	MicroPwr	MP201	
	National	LF11201	
		LF13201	
	PMI	SW201	
DG202	National	LF13202	
	PMI	SW-02	
		SW202	
DG211	Intersil	IH5052	
DG243	Harris	HI5043	
	Intersil	DG191	
		IH5043	
	Siliconix	DG191	
		DG5043	
DG300A	Harris	HI300	
DG301A	Harris	HI301	
DG302A	Harris	HI302	
	MicroPwr	**MP302**	3207,3605
DG303A	Harris	HI303	
	MicroPwr	**MP303**	3207,3605
DG304A	Harris	HI304	
DG305A	Harris	HI305	
DG306A	Harris	HI306	
DG307A	Harris	HI307	
DG381A	Harris	HI381	
		HI5048	
	Intersil	DG181	
		IH5048	
	Siliconix	DG181	
DG384A	Harris	HI384	
		HI5049	
	Intersil	DG184	
		IH5049	
	Siliconix	DG184	
DG387A	Harris	HI387	
		HI5050	
	Intersil	DG187	
		IH5050	
	Siliconix	DG187	
DG390A	Harris	HI390	
DG5040	Harris	HI5040	
	Intersil	IH5040	
DG5041	Harris	HI5041	
	Intersil	IH5041	
DG5042	Harris	HI5042	
	Intersil	DG188	
		IH5042	
	Siliconix	DG188	
DG5043	Harris	HI5043	
	Intersil	DG191	
		IH5043	
	Siliconix	DG191	
		DG243	
DG5044	Harris	HI5044	
	Intersil	IH5044	
DG5045	Harris	HI5045	
	Intersil	DG185	
		IH5045	
	Siliconix	DG185	
	TI	TL185	
DG506A	**Burr-Brown**	**MPC16S**	3149
	Datel	**MV-1606**	3163
		MX-1606	3163
	Harris	HI506	
	Intersil	IH6116	
	MicroPwr	MP7506	
	PMI	MUX-16	
◆DG507	AD	AD7507	
	Burr-Brown	**MPC8D**	3149
	Datel	**MVD-807**	3163
		MXD-807	3163
	Harris	HI507	
	Intersil	IH6216	
	MicroPwr	MP7507	
	PMI	MUX-28	
	Siliconix	DG507A	
	TeledyneP	4551	
DG507A	AD	AD7507	
	Burr-Brown	**MPC8D**	3149
	Datel	**MVD-807**	3163
		MXD-807	3163
	Harris	HI507	
	Intersil	IH6216	
	MicroPwr	MP7507	
	PMI	MUX-28	
	TeledyneP	4551	
◆DG508	AD	AD7501	
	Burr-Brown	**MPC8S**	3149
	Datel	MUX808	
		MX-808	3163
	Harris	HI508	
	Intersil	IH6108	
	MicroPwr	MP7501	
		MP7508	
	National	LF11508	
		LF13508	
	PMI	DMX-88	
		MUX-08	
		MUX-88	
	Siliconix	DG508A	
	TeledyneP	4554	
DG508A	AD	AD7501	
	Burr-Brown	**MPC8S**	3149
	Datel	MUX808	
		MX-808	3163
	Harris	HI508	
	Intersil	IH6108	
	MicroPwr	MP7501	
		MP7508	
	National	LF11508	
		LF13508	
	PMI	DMX-88	
		MUX-08	
		MUX-88	
	TeledyneP	4554	
◆DG509	**Burr-Brown**	**MPC4D**	3149
	Harris	HI509	
	Intersil	IH6208	
	MicroPwr	MP7509	
		MP7509DI	
	National	LF11509	
		LF13509	
	PMI	MUX-24	
	Siliconix	DG509A	
	TeledyneP	4553	
DG509A	**Burr-Brown**	**MPC4D**	3149
	Harris	HI509	
	Intersil	IH6208	
	MicroPwr	MP7509	
		MP7509DI	
	National	LF11509	
		LF13509	
	PMI	MUX-24	
	TeledyneP	4553	
DG5140	Intersil	IH5140	
DG5141	Intersil	IH5141	
DG5142	Intersil	IH5142	
DG5143	Intersil	IH5143	
DG5144	Intersil	IH5144	
DG5145	Intersil	IH5145	
◆G115	Intersil	G115	
◆G116	Intersil	G116	
G118	Intersil	G118	
G119	Intersil	G119	
◆G126	Intersil	G126	
◆G128	Intersil	G128	
L144	Siltronics	SL144	
◆LD131	**Intersil**	**ICL7106**	3198
	Maxim	ICL7106	
	TeledyneS	TSC7106	
◆LM101	AMD	LM101	
	AD	AD101	
	Fairchild	µA101	
	Intersil	AD101	
	LinearTech	LM101	
	Motorola	LM101	
	Raytheon	LM101	
	SiliconG	SG101	
	ThomsonCSF	LM101	
◆LM3909	National	LM3909	
MP7622	AD	AD7622	
	HybridSys	HS3120	
	MicroPwr	MP7622	
PWM125	Cherry	CS1525A	
	Exar	**XR1525A**	3559
	IPS	**IP1525A**	3599
	LinearTech	LT1525A	
	Motorola	**SG1525A**	3626
	SGS	SG1524A	
PWM125	SiliconG	SG1525A	
	Sprague	ULS-8125	
	TI	SG1525A	
	Unitrode	**UC1525A**	3739
PWM25	Exar	XR3525A	
	IPS	**IP3525A**	3599
	LinearTech	LT3525A	
	Motorola	**SG3525A**	3626
	SGS	SG3525A	
	SiliconG	SG3525A	
	TI	SG3525A	
	Unitrode	**UC3525A**	3739
PWM25B	Cherry	CS2525A	
	Exar	XR2525A	
	IPS	**IP2525A**	3599
	LinearTech	LT2525A	
	Motorola	**SG2525A**	3626
	SiliconG	SG2525A	
	Sprague	ULQ-8125	
	TI	SG2525A	
	Unitrode	**UC2525A**	3739
PWM27	Cherry	CS1527A	
	IPS	IP1527A	
	LinearTech	LT1527A	
	Motorola	**SG1527A**	3626
	SGS	SG1527A	
	SiliconG	SG1527A	
	Sprague	ULS-8125	
	TI	SG1527A	
	Unitrode	**UC1527A**	3739
PWM27B	Sprague	ULQ-8127	
	Unitrode	**UC2527A**	3739
SD5000	Telmos	SD5000	
SD5001	Telmos	SD5001	
SD5002	Telmos	SD5002	
SDS000	SPI	SD5000	
SDS001	SPI	SD5001	
SDS002	SPI	SD5002	
SDS200	SPI	SD5200	
	Siliconix	SI5200	
◆SG4250	Harris	HA-2720	
	Intersil	ICL7611	
		ICL8021	
		LM4250	
	Maxim	ICL7611	
	Motorola	**MC1776**	3616
	National	LF441	
		LM4250	
	PMI	OP20	
		OP21	
		OP22	
	SGS	MC1776	
	Solitron	UC4250	
	TI	TLC251	
		TLC271	
	ThomsonCSF	µA776	
◆SG555	Exar	XR555	
	Fairchild	µA555	
	Hitachi	HA17555	
	Intersil	NE555	
	Mitsubishi	M51841	
		M51848	
		M5251	
		M5E555	
	Motorola	MC1455	
	NEC	µPC1555	
	Raytheon	RC555	
	RCA	CA555	
	Sanyo	LB8555	
	SGS	NE555	
	Signetics	**NE555**	3721
		NE555N	
	TI	NE555	
	ThomsonCSF	LM555	
	Samsung	**NE555**	3679
◆SG748	Intersil	ICL748	
◆SI1525B	Cherry	CS1525A	
	Exar	**XR1525A**	3559
	IPS	**IP1525A**	3599
	LinearTech	LT1525A	
	Motorola	**SG1525A**	3626
	SGS	SG1524A	
	SiliconG	SG1525A	
	Siliconix	PWM125	
	Sprague	ULS-8125	
	TI	SG1525A	
	Unitrode	**UC1525A**	3739
◆SI1527B	Cherry	CS1527A	
	IPS	IP1527A	
	LinearTech	LT1527A	
	Motorola	**SG1527A**	3626
	SGS	SG1527A	

(Continued)

◆ Discontinued

Bold face device numbers indicate manufacturers data is provided in the IC Master on the pages noted.

Siliconix (Cont'd)

Manufacturer Device	Replacement Source	Device	IC Master Page
◆SI1527B	SiliconG	SG1527A	
	Siliconix	PWM27	
	Sprague	ULS-8125	
	TI	SG1527A	
	Unitrode	**UC1527A**	**3739**
SI25HC04	AMD	AM2504	
SI3002	Fairchild	SH3002	
◆SI3527B	Cherry	CS3527	
		CS3527A	
	Exar	**XR3527A**	**3559**
	IPS	**IP3527**	**3599**
	LinearTech	LT3527A	
	Motorola	**SG3527A**	**3626**
	SGS	SG3527A	
	SiliconG	SG3527A	
	TI	SG3527A	
◆SI3535B	Exar	XR3525A	
	IPS	**IP3525A**	**3599**
	LinearTech	LT3525A	
	Motorola	**SG3525A**	**3626**
	SGS	SG3525A	
	SiliconG	SG3525A	
	Siliconix	PWM25	
	TI	SG3525A	
	Unitrode	**UC3525A**	**3739**
◆SI452	Intersil	MM452	
◆SI455	Intersil	MM455	
SI520			
SI5200	SPI	SD5200	
	Siliconix	SDS200	
◆SI552	Intersil	MM552	
◆SI555	Intersil	MM555	
SI7135	**Datel**	**AM-7650**	**3158,3163**
	Intersil	ICL7650	
	LinearTech	LTC1052	
		LTC7652	
	Maxim	ICL7650	
	TeledyneC	TSC7650	
SI7541	AD	AD7541	
	Datel	**DAC-7541**	**3162**
	Harris	HI7541	
	HybridSys	DAC331	
		HS7541	
	Intersil	AD7541	
		ICL7541	
	MicroPwr	MP7541	
		MP7621	
	National	AD7521	
	TeledyneP	TP7541	
SI7652	**Intersil**	**ICL7652**	**3601**
	LinearTech	LTC1052	
	Maxim	ICL7652	
SI7660	Datel	VI-7660	
	Intersil	**ICL7660**	**3603**
	LinearTech	LTC1044	
	Maxim	ICL7660	
	TeledyneC	TSC7660	
SI7661	Intersil	ICL7662	
SI9551	**Sprague**	**UCN-5851**	**3269**
	TI	SN75551	
SI9552	**Sprague**	**UCN-5852**	**3269**
	TI	SN75552	
SI9553	**Sprague**	**UCN-5853**	**3269**
	TI	SN75553	
SI9554	**Sprague**	**UCN-5854**	**3269**
	TI	SN75554	
Si7135	**Intersil**	**ICL7135**	**3199**
	Maxim	ICL7135	
	Siliconix	**SI7135**	**3248,3254**
	TeledyneS	TSC7135	

Siltronics

Manufacturer Device	Replacement Source	Device	IC Master Page
SL144	Siliconix	L144	

Solid State Micro Technology for Music

Manufacturer Device	Replacement Source	Device	IC Master Page
SSM2134	AnalogSys	MA332	
	Datel	AM-453-2C	
	Exar	**XR5534**	**3557**
	Raytheon	RC5534	
	Signetics	**NE5534**	**3708,3720,3729**
		NE5534A	**3708,3720,3729**
	TI	NE5534	
		NE5534A	

Solitron Devices

Manufacturer Device	Replacement Source	Device	IC Master Page
CM4000	Motorola	MC14000	
	National	CD4000	
	RCA	CD4000	
	SGS	HCC/HCF4000	
	Signetics	HEF400	
	SSS	SCL4000	
CM4001	Fairchild	F4001	
	Motorola	MC14001	
	National	CD4001	
		MM74C02	
	OKI	MSM4001	
	RCA	CD4001	
	Sanyo	LC4001B	
	SGS	HCC/HCF4001	
	Signetics	HEF4001	
	SSS	SCL4001	
	Toshiba	TC4001	
CM4002	Fairchild	F4002	
	Motorola	MC14002	
	National	CD4002	
	RCA	CD4002	
	SGS	HCC/HCF4002	
	Signetics	HEF4002	
	SSS	SCL4002	
	Toshiba	TC4002	
CM4006	Fairchild	F4006	
	National	CD4006	
	RCA	CD4006	
	SGS	HCC/HCF4006	
	Signetics	HEF4006	
	SSS	SCL4006	
	Toshiba	TC4006	
CM4007	Fairchild	F4007	
	Motorola	MC14007	
	National	CD4007	
	RCA	CD4007	
	SGS	HCC/HCF4007	
	Signetics	HEF4007	
	SSS	SCL4007	
	Toshiba	TC4007	
CM4008	Fairchild	F4008	
	Motorola	MC14008	
	National	CD4008	
		MM74C83	
	RCA	CD4008	
	SGS	HCC/HCF4008	
	Signetics	HEF4008	
	SSS	SCL4008	
	Toshiba	TC4008	
CM4009	National	CD4009	
	RCA	CD4009	
	SGS	HCC/HCF4009	
	SSS	SCL4009	
	Toshiba	TC4009	
CM4010	National	CD4010	
	RCA	CD4010	
	SGS	HCC/HCF4010	
	SSS	SCL4010	
	Toshiba	TC4010	
CM4011	Fairchild	F4011	
	Motorola	MC14011	
	National	CD4011	
		MM74C00	
	OKI	MSM4011	
	RCA	CD4011	
	Sanyo	LC4011	
	SGS	HCC/HCF4011	
	Signetics	HEF4011	
	SSS	SCL4011	
	Toshiba	TC4011	
CM4012	Fairchild	F4012	
	Motorola	MC14012	
	National	CD4012	
	RCA	CD4012	
	SGS	HCC/HCF4012	
	Signetics	HEF4012	
	SSS	SCL4012	
	Toshiba	TC4012	
CM4013	Fairchild	F4013	
	Motorola	MC14013	
	National	CD4013	
		MM74C74	
	OKI	MSM4013	
	RCA	CD4013	
	Sanyo	LC4013	
	SGS	HCC/HCF4013	
	Signetics	HEF4013	
	SSS	SCL4013	
	Toshiba	TC4013	
CM4014	Fairchild	F4014	
	Motorola	MC14014	
	National	CD4014	
	RCA	CD4014	
	SGS	HCC/HCF4014	
	Signetics	HEF4014	
	SSS	SCL4014	
	Toshiba	TC4014	
CM4015	Fairchild	F4015	
	Motorola	MC14015	
	National	CD4015	
		MM74C164	
	OKI	MSM4015	
	RCA	CD4015	
	Sanyo	LC4015	
	SGS	HCC/HCF4015	
	Signetics	HEF4015	
	SSS	SCL4015	
	Toshiba	TC4015	
CM4016	Fairchild	F4016	
		F4066	
	Motorola	MC14016	
		MC14066	
	National	CD4016	
		CD4066	
	RCA	CD4016	
		CD4066	
	Sanyo	LC4016	
		LC4066	
	SGS	HCC/HCF4016	
		HCC/HCF4066	
	Signetics	HEF4016	
		HEF4066	
	Solitron	CM4066	
		HCF4016	
	SSS	SCL4016	
		SCL4066	
	Toshiba	TC4016	
		TC4066	
CM4017	Fairchild	F4017	
	Motorola	MC14017	
	National	CD4017	
	RCA	CD4017	
	SGS	HCC/HCF4017	
	Signetics	HEF4017	
	SSS	SCL4017	
	Toshiba	TC4017	
CM4018	Fairchild	F4018	
	Motorola	MC14018	
	National	CD4018	
	RCA	CD4018	
	SGS	HCC/HCF4018	
	Signetics	HEF4018	
	SSS	SCL4018	
	Toshiba	TC4018	
CM4019	Fairchild	F4019	
	National	CD4019	
	OKI	MSM4019	
	RCA	CD4019	
	Sanyo	LC4019	
	SGS	HCC/HCF4019	
	Signetics	HEF4019	
	SSS	SCL4019	
	Toshiba	TC4019	
CM4020	Fairchild	F4020	
	Motorola	MC14020	
	National	CD4020	
	RCA	CD4020	
	SGS	HCC/HCF4020	
	Signetics	HEF4020	
	SSS	SCL4020	
	Toshiba	TC4020	
CM4022	Fairchild	F4022	
	Motorola	MC14022	
	National	CD4022	
	RCA	CD4022	
	SGS	HCC/HCF4022	
	Signetics	HEF4022	
	SSS	SCL4022	
	Toshiba	TC4022	
CM4023	Fairchild	F4023	
	Motorola	MC14023	
	National	CD4023	
		MM74C10	
	RCA	CD4023	
	SGS	HCC/HCF4023	
	Signetics	HEF4023	
	SSS	SCL4023	
	Toshiba	TC4023	
CM4024	Fairchild	F4024	
	Motorola	MC14024	
	National	CD4024	
CM4024	RCA	CD4024	
	SGS	HCC/HCF4024	
	Signetics	HEF4024	
	SSS	SCL4024	
	Toshiba	TC4024	
CM4025	Fairchild	F4025	
	Motorola	MC14025	
	National	CD4025	
	RCA	CD4025	
	SGS	HCC/HCF4025	
	Signetics	HEF4025	
	SSS	SCL4025	
	Toshiba	TC4025	
CM4026	RCA	CD4026	
	SGS	HCC/HCF4026	
	SSS	SCL4026	
CM4027	Fairchild	F4027	
	Motorola	MC14027	
	National	CD4027	
		MM74C76	
	OKI	MSM4027	
	RCA	CD4027	
	Sanyo	LC4027	
	SGS	HCC/HCF4027	
	Signetics	HEF4027	
	SSS	SCL4027	
CM4028	Fairchild	F4028	
	Motorola	MC14028	
	National	CD4028	
		MM74C42	
	OKI	MSM4028	
	RCA	CD4028	
	Sanyo	LC4028	
	SGS	HCC/HCF4028	
	Signetics	HEF4028	
	SSS	SCL4028	
	Toshiba	TC4028	
CM4029	Fairchild	F4029	
	Motorola	MC14029	
	National	CD40192	
		CD4029	
	RCA	CD40192	
		CD4029	
	SGS	HCC/HCF40192	
		HCC/HCF4029	
	Signetics	HEF40192	
	SSS	SCL4029	
		SCL4192	
	Toshiba	TC40192	
		TC4029	
CM4030	Fairchild	F4030	
	National	CD4030	
	RCA	CD4030	
	SGS	HCC/HCF4030	
	Signetics	HEF4030	
	SSS	SCL4030	
	Toshiba	TC4030	
CM4032	Motorola	MC14032	
	RCA	CD4032	
	SGS	HCC/HCF4032	
	Toshiba	TC4032	
CM4033	RCA	CD4033	
	SGS	HCC/HCF4033	
	SSS	SCL4033	
CM4034	Fairchild	F4034	
	Motorola	MC14034	
	National	CD4034	
	RCA	CD4034	
	SGS	HCC/HCF4034	
	SSS	SCL4034	
	Toshiba	TC4034	
CM4035	Fairchild	F4035	
	Motorola	MC14035	
	RCA	CD4035	
	SGS	HCC/HCF4035	
	Signetics	HEF4035	
	Toshiba	TC4035	
CM4036	RCA	CD4036	
	Toshiba	TC4036	
CM4037	RCA	CD4037	
CM4038	Motorola	MC14038	
	RCA	CD4038	
	SGS	HCC/HCF4038	
	Toshiba	TC4038	
CM4039	RCA	CD4039	
	Toshiba	TC4039	
CM4040	Fairchild	F4040	
	Motorola	MC14040	
	National	CD4040	
	RCA	CD4040	
	SGS	HCC/HCF4040	
	Signetics	HEF4040	

(Continued)

◆ Discontinued

The manufacturers report their devices can be used as direct replacements.
Performance details often differ, so compare the specifications considering your requirements.

Solitron Devices (Cont'd)

Manufacturer Device	Replacement Source	Device	IC Master Page
CM4040	SSS	SCL4040	
	Toshiba	TC4040	
CM4041	Fairchild	F4041	
	National	CD4041	
	RCA	CD4041	
	SGS	HCC/HCF4041	
	Signetics	HEF4041	
	SSS	SCL4041	
CM4042	Fairchild	F4042	
	Motorola	MC14042	
	National	CD4042	
	RCA	CD4042	
	SGS	HCC/HCF4042	
	Signetics	HEF4042	
	SSS	SCL4042	
	Toshiba	TC4042	
CM4043	Motorola	MC14043	
	National	CD4043	
	RCA	CD4043	
	SGS	HCC/HCF4043	
	Signetics	HEF4043	
	SSS	SCL4043	
	Toshiba	TC4043	
CM4044	Fairchild	F4044	
	Motorola	MC14044	
	National	CD4044	
	RCA	CD4044	
	SGS	HCC/HCF4044	
	Signetics	HEF4044	
	Toshiba	TC4044	
CM4045	Fairchild	F4521	
	Motorola	MC14521	
	RCA	CD4045	
	SGS	HCC/HCF4045	
	Signetics	HEF4521	
	SSS	SCL4445	
	Toshiba	TC4521	
CM4046	Fairchild	F4046	
	Motorola	MC14046	
	National	CD4046	
	RCA	CD4046	
	SGS	HCC/HCF4046	
	SSS	SCL4046	
CM4047	Fairchild	F4047	
	National	CD4047	
	RCA	CD4047	
	SGS	HCC/HCF4047	
	Signetics	HEF4047	
	SSS	SCL4047	
	Toshiba	TC4047	
CM4048	National	CD4048	
	RCA	CD4048	
	SGS	HCC/HCF4048	
	SSS	SCL4402	
CM4049	Fairchild	F4049	
	Motorola	MC14049	
	National	CD4049	
	OKI	MSM4049	
	RCA	CD4049	
	Sanyo	LC4049	
	SGS	HCC/HCF4049	
	Signetics	HEF4049	
	SSS	SCL4049	
	Toshiba	TC4049	
CM4050	Fairchild	F4050	
	Motorola	MC14050	
	National	CD4050	
	RCA	CD4050	
	SGS	HCC/HCF4050	
	Signetics	HEF4050	
	SSS	SCL4050	
	Toshiba	TC4050	
CM4051	Fairchild	F4051	
	Motorola	MC14051	
	National	CD4051	
	RCA	CD4051	
	SGS	HCC/HCF4051	
	Signetics	HEF4051	
	SSS	SCL4051	
	Toshiba	TC4051	
CM4052	AD	AD7502	
	Datel	MVD409	
	Harris	HI1828A	
	MicroPwr	MP7502	
	National	CD4052	
	SSS	SCL4052	
	Toshiba	TC4052	
CM4053	Fairchild	F4053	
	Motorola	MC14053	
	National	CD4053	
		(Continued)	
CM4053	RCA	CD4053	
	SGS	HCC/HCF4053	
	Signetics	HEF4053	
	SSS	SCL4053	
	Toshiba	**TC4053B**	1363
CM4066	Fairchild	F4016	
		F4066	
	Motorola	MC14016	
		MC14066	
	National	CD4016	
		CD4066	
	RCA	CD4016	
		CD4066	
	Sanyo	LC4016	
		LC4066	
	SGS	HCC/HCF4016	
		HCC/HCF4066	
	Signetics	HEF4016	
		HEF4066	
	Solitron	CM4016	
		HCF4016	
	SSS	SCL4016	
		SCL4066	
	Toshiba	TC4016	
		TC4066	
CM4068	Fairchild	F4068	
	Motorola	MC14068	
	RCA	CD4068	
	SGS	HCC/HCF4068	
	Signetics	HEF4068	
	SSS	SCL4068	
	Toshiba	TC4068	
CM4069	Fairchild	F4069	
	Motorola	MC14069	
	National	CD4069	
		MM54C04	
		MM74C04	
	OKI	MSM4069	
	RCA	CD4069	
	Sanyo	LC4069	
	SGS	HCC/HCF4069	
	Signetics	HEF4069	
	SSS	SCL4069	
		SCL4449	
	Toshiba	TC4069	
CM4070	Fairchild	F4070	
	Motorola	MC14070	
	National	CD4070	
		MM74C86	
	RCA	CD4070	
	SGS	HCC/HCF4070	
	Signetics	HEF4070	
	SSS	SCL4070	
CM4071	Fairchild	F4071	
	Motorola	MC14071	
	National	CD4071	
		MM74C32	
	OKI	MSM4071	
	RCA	CD4071	
	Sanyo	LC4071	
	SGS	HCC/HCF4071	
	Signetics	HEF4071	
	SSS	SCL4071	
	Toshiba	TC4071	
CM4073	Fairchild	F4073	
	Motorola	MC14073	
	National	CD4073	
	RCA	CD4073	
	SGS	HCC/HCF4073	
	Signetics	HEF4073	
	SSS	SCL4073	
	Toshiba	TC4073	
CM4075	Fairchild	F4075	
	Motorola	MC14075	
	National	CD4075	
	RCA	CD4075	
	SGS	HCC/HCF4075	
	Signetics	HEF4075	
	SSS	SCL4075	
	Toshiba	TC4075	
CM4076	Fairchild	F4076	
	Motorola	MC14076	
	National	CD4076	
		MM54C173	
		MM74C173	
	RCA	CD4076	
	SGS	HCC/HCF4076	
	Signetics	HEF4076	
	SSS	SCL4076	
	Toshiba	TC4076	
CM4077	Fairchild	F4077	
	Motorola	MC14077	
		(Continued)	
CM4077	National	CD4077	
	RCA	CD4077	
	SGS	HCC/HCF4077	
	Signetics	HEF4077	
	SSS	SCL4077	
CM4078	Fairchild	F4078	
	Motorola	MC14078	
	RCA	CD4078	
	SGS	HCC/HCF4078	
	Signetics	HEF4078	
	SSS	SCL4078	
	Toshiba	TC4078	
CM4081	Fairchild	F4081	
	Motorola	MC14081	
	National	CD4081	
		MM74C08	
	OKI	MSM4081	
	RCA	CD4081	
	Sanyo	LC4081	
	SGS	HCC/HCF4081	
	Signetics	HEF4081	
	SSS	SCL4081	
	Toshiba	TC4081	
CM4508	Motorola	MC14508	
	National	DM74147	
	RCA	CD4508	
	SGS	HCC/HCF4508	
	Signetics	**74147**	1157
		HEF4508	
		N82147	
	SSS	SCL4508	
	TI	SN74147	
	Toshiba	TC4508	
CM4510	Fairchild	F4510	
	Motorola	MC14510	
	National	CD4510	
	RCA	CD4510	
	SGS	HCC/HCF4510	
	Signetics	HEF4510	
	SSS	SCL4510	
	Toshiba	TC4510	
CM4511	Fairchild	F4511	
	Mitel	MD4511	
	MMI	4511	
	Motorola	MC14511	
	National	CD4511	
	NEC	μPD4511	
	RCA	CD4511	
	SGS	HCC/HCF4511	
	Signetics	HEF4511	
	SSS	SCL4511	
	Toshiba	TC4511	
CM4514	Fairchild	F4514	
	Motorola	MC14514	
	National	CD4514	
	RCA	CD4514	
	SGS	HCC/HCF4514	
	Signetics	HEF4514	
	SSS	SCL4514	
	Toshiba	TC4514	
CM4515	Fairchild	F4515	
	Motorola	MC14515	
	National	CD4515	
	RCA	CD4515	
	SGS	HCC/HCF4515	
	Signetics	HEF4515	
	SSS	SCL4515	
	Toshiba	TC4515	
CM4516	Fairchild	F4516	
	Motorola	MC14516	
	National	CD4516	
	RCA	CD4516	
	SGS	HCC/HCF4516	
	Signetics	HEF4516	
	SSS	SCL4516	
	Toshiba	TC4516	
CM4518	Fairchild	F4518	
	Motorola	MC14518	
	National	CD4518	
	RCA	CD4518	
	SGS	HCC/HCF4518	
	Signetics	HEF4518	
	SSS	SCL4518	
	Toshiba	TC4518	
CM4520	Fairchild	F4520	
	Motorola	MC14520	
	National	CD4520	
	OKI	MSM4520	
	RCA	CD4520	
	Sanyo	LC4520	
	SGS	HCC/HCF4520	
	Signetics	HEF4520	
		(Continued)	
CM4520	SSS	SCL4520	
	Toshiba	TC4520	
HCF4016	Fairchild	F4016	
		F4066	
	Motorola	MC14016	
		MC14066	
	National	CD4016	
		CD4066	
	RCA	CD4016	
		CD4066	
	Sanyo	LC4016	
		LC4066	
	SGS	HCC/HCF4016	
		HCC/HCF4066	
	Signetics	HEF4016	
		HEF4066	
	Solitron	CM4016	
		CM4066	
	SSS	SCL4016	
		SCL4066	
	Toshiba	TC4016	
		TC4066	
UC4250	Harris	HA-2720	
	Intersil	ICL7611	
		ICL8021	
		LM4250	
	Maxim	ICL7611	
	Motorola	**MC1776**	3616
	National	LF441	
		LM4250	
	PMI	OP20	
		OP21	
		OP22	
	SGS	MC1776	
	TI	TLC251	
		TLC271	
	ThomsonCSF	μA776	
μA2556	Solitron	μA2656	
		μA3556	
		μA3656	
μA2656	Solitron	μA2556	
		μA3556	
		μA3656	
μA3556	Solitron	μA2556	
		μA2656	
		μA3656	
μA3656	Solitron	μA2556	
		μA2656	
		μA3556	

Sprague Electric Company

Manufacturer Device	Replacement Source	Device	IC Master Page
◆TDA1090	Sprague	UCN-5810	
◆UCN-4810	**GouldAMI**	**S4534**	3168
	Sprague	UCN-5810	
	TI	UCN4810A	
◆UCN-4815	Sprague	UCN-5815	
UCN-5810	**GouldAMI**	**S4534**	3168
	TI	UCN4810A	
UCN-5818	**GouldAMI**	**S4535**	3169
	TI	SN75518	
UCN-5851	**Siliconix**	**SI9551**	3260
	TI	SN75551	
UCN-5852	**Siliconix**	**SI9552**	3260
	TI	SN75552	
UCN-5853	**Siliconix**	**SI9553**	3260
	TI	SN75553	
UCN-5854	**Siliconix**	**SI9554**	3260
	TI	SN75554	
UDN-2541	TI	SN75437A	
UDN-2580	Motorola	MC1417	
UDN-2841	Motorola	UDN2841	
	TI	UDN2841	
◆UDN-2842	TI	UDN2842	
◆UDN-2843	TI	UDN2843	
◆UDN-2844	TI	UDN2844	
UDN-2845	Motorola	UDN2845	
	TI	UDN2845	
◆UDN-2846	TI	UDN2846	
UDN-2935	SiliconG	SG3635	
UDN-2950	TI	SN75605	
UDN-2976W	SiliconG	SG3638	
UDN-2981	Mitsubishi	M54563	
UDN-3611	National	DS3611	
		LM3611	
	TI	SN75471	
UDN-3612	National	DS3612	
		DS3632	
		LM3612	
	TI	SN75472	

◆ Discontinued

Bold face device numbers indicate manufacturers data is provided in the IC Master on the pages noted.

Sprague Electric Company (Cont'd)

Manufacturer Device	Replacement Source	Device	IC Master Page
UDN-3613	National	DS3613	
		LM3613	
	TI	SN75473	
UDN-3614	National	DS3614	
		LM3614	
	TI	SN75474	
UDN-5711	Motorola	MC1471	
	TI	SN75476	
		UDN5711	
UDN-5712	**Motorola**	**MC1472**	**3212**
	TI	SN75475	
		UDN5712	
UDN-5713	Motorola	MC1473	
	TI	SN75478	
		UDN5713	
UDN-5714	Motorola	MC1474	
	TI	SN75479	
		UDN5714	
	Toshiba	TD62479	
UDN-5722	TI	SN75477	
UDN-6118	Dionics	DI513B	
		DI514B	
	Exar	**XR6118**	**3554**
	OKI	MSL912	
	Sanyo	LB1290	
	Signetics	**NE594**	**3726**
	Toshiba	TD62781	
◆UDN-6126	**Sprague**	**UDN-6116**	**3269**
UDN-6128	**Exar**	**XR6128**	**3554**
	Toshiba	TD62782	
◆UDN-6144	Dionics	DI502	
◆UDN-6148	**Sprague**	**UDN-6138**	**3269**
◆UDN-6164	**Sprague**	**UDN-6116**	**3269**
UDN-6164A	Dionics	DI507	
◆UDN-6184	Dionics	DI513B	
		DI514B	
	Exar	**XR6118**	**3554**
	OKI	MSL912	
	Sanyo	LB1290	
	Signetics	**NE594**	**3726**
	Sprague	**UDN-6118**	**3269**
	Toshiba	TD62781	
UDN-6510	Dionics	DI510	
UDN-6514	Dionics	DI512	
UDN-7183	Dionics	DI302	
UDN-7183A	Dionics	DI302	
	Sprague	UDN-7184A	
		UDN-7186A	
UDN-7184A	Dionics	DI302	
	Sprague	UDN-7183A	
		UDN-7186A	
UDN-7186A	Dionics	DI302	
	Sprague	UDN-7183A	
		UDN-7184A	
UDQ-6118	**Signetics**	**SA594**	**3726**
ULN-2001	Exar	XR2001	
		XR2001C	
		XR2201C	
	Mitsubishi	M54524	
	Motorola	**MC1411**	**3212**
		ULN2001	**3212**
	NEC	µPA2001	
	RIFA	PBD3523-11	
	Sanyo	LB1231	
	SGS	L201	
		ULN2001	
	SiliconG	SG2001	
	Sprague	ULQ-2001	
	TI	ULN2001A	
	Toshiba	TD62001	
		TD62101	
ULN-2002	Exar	XR2002C	
		XR2202C	
	Fairchild	MC1412	
	Mitsubishi	M54525	
	Motorola	**MC1412**	**3212**
		ULN2002	**3212**
	NEC	µPA2002	
	RIFA	PBD352304	
	Sanyo	LB1232	
	SGS	L202	
		ULN2002	
	Signetics	NE5602	
	SiliconG	SG2002	
	TI	ULN2002A	
	Toshiba	TD62002	
ULN-2003	Exar	XR2003C	
		XR2203C	
	Fairchild	MC1413	
ULN-2003	Mitsubishi	M54523	
	Motorola	**MC1413**	**3212**
		ULN2003	**3212**
	NEC	µPA2003	
	RIFA	PBD352303	
	Sanyo	LB1233	
	SGS	L203	
		ULN2003	
	Signetics	NE5603	
		ULN2003	**3721**
	SiliconG	SG2003	
	Telefunken	TDA2003	
	TI	ULN2003A	
	Toshiba	TD62003	
		TD62103	
ULN-2004	Exar	XR2204C	
	Mitsubishi	M54526	
	Motorola	**MC1416**	**3212**
		ULN2004	**3212**
	NEC	µPA2004	
	RIFA	PBD352302	
	Sanyo	LB1234	
	SGS	L204	
		ULN2004	
	Signetics	NE5604	
		ULN2004	**3721**
	SiliconG	SG2004	
	Sprague	ULS-2004	
	TI	ULN2004A	
	Toshiba	TD62004	
		TD62104	
ULN-2005	Exar	XR2205C	
	TI	ULN2005	
ULN-2011	Exar	XR2011C	
	SiliconG	SG2011	
ULN-2012	Exar	XR2012C	
	SiliconG	SG3852	
ULN-2013	Exar	XR2013C	
	SiliconG	SG2013	
ULN-2014	Exar	XR2014C	
	SiliconG	SG2014	
ULN-2021	RIFA	PBD352311	
	Signetics	NE5501	
	TI	SN75466	
ULN-2022	RIFA	PBD3524-14	
	SiliconG	SG2002	
		SG2022	
	Sprague	ULS-2002	
	TI	SN75467	
ULN-2023	Exar	XR2003	
	Motorola	MC1413T	
	RIFA	PBD3523-13	
	SiliconG	SG2023	
	Sprague	ULQ-2003	
	TI	SN75468	
ULN-2024	RIFA	PBD352312	
	SiliconG	SG2024	
	TI	SN75469	
ULN-2025	TI	SN75465	
ULN-2046	Fairchild	UA3046	
	Motorola	**MC3346**	**3614**
	National	LM3046	
	Plessey	SL3046	
		SL3146	
	RCA	**CA3046**	**3678**
		CA3146	**3678**
	Sanyo	LA3046	
	SGS	CA3046	
		TBA331	
	SiliconG	SG3046	
		SG3146	
		SG3821	
	ThomsonCSF	SFC	
ULN-2054	Fairchild	UA3054	
	Motorola	**CA3054**	**3614**
	National	LM3054	
	RCA	**CA3054**	**3678**
	ThomsonCSF	SFC2054	
ULN-2064	**IPS**	**IP2064**	**3599**
	Mitsubishi	M54532	
	Motorola	ULN2064	
	SGS	ULN2064	
	TI	SN75064	
		ULN2064	
	Toshiba	TD62064	
ULN-2065	**IPS**	**IP2065**	**3599**
	Motorola	ULN2065	
	SGS	ULN2065	
	TI	SN75065	
		ULN2065	
ULN-2066	**IPS**	**IP2066**	**3599**
	Motorola	ULN2066	
ULN-2066	SGS	ULN2066	
	TI	SN75066	
		ULN2066	
ULN-2067	**IPS**	**IP2067**	**3599**
	Motorola	ULN2067	
	SGS	ULN2067	
	TI	SN75067	
		ULN2067	
ULN-2068	**IPS**	**IP2068**	**3599**
	Motorola	**ULN2068**	**3212**
	SGS	ULN2068	
	TI	SN75068	
		ULN2068	
ULN-2069	**IPS**	**IP2069**	**3599**
	Motorola	ULN2069	
	SGS	ULN2069	
	TI	SN75069	
		ULN2069	
ULN-2070	SGS	ULN2070	
ULN-2071	SGS	ULN2071	
ULN-2074	**IPS**	**IP2074**	**3599**
	Motorola	**ULN2074**	**3212**
	SGS	ULN2074	
	TI	SN75074	
		ULN2074	
	Toshiba	TD62074	
ULN-2075	**IPS**	**IP2075**	**3599**
	Motorola	ULN2075	
	SGS	ULN2075	
	TI	SN75075	
		ULN2075	
ULN-2076	SGS	ULN2076	
ULN-2077	SGS	ULN2077	
ULN-2081	**RCA**	**CA3081**	**3678**
ULN-2082	**RCA**	**CA3082**	**3678**
ULN-2083	**RCA**	**CA3083**	**3678**
		CA3183	**3678**
	SiliconG	SG3083	
		SG3183	
ULN-2086	Fairchild	UA3086	
	Motorola	**MC3386**	**3614**
	National	LM3086	
	Plessey	SL3086	
	RCA	**CA3086**	**3678**
	Sanyo	LA3086	
	SiliconG	SG3086	
		SG3886	
	ThomsonCSF	SFC2086	
ULN-2111	**Motorola**	**MC1357**	**3613**
	National	LM2111	
		LM2113	
	RCA	CA2111	
	Signetics	N5111	
	TI	SN76642	
		SN76643	
◆ULN-2113	**Motorola**	**MC1357**	**3613**
	National	LM2111	
		LM2113	
	RCA	CA2111	
	Signetics	N5111	
	Sprague	ULN-2111	
	TI	SN76642	
		SN76643	
◆ULN-2124	RCA	CA3070	
	TI	SN76242	
◆ULN-2127	RCA	CA3071	
	TI	SN76243	
ULN-2204	Telefunken	TDA1083	
		U417B	
	Toshiba	TA7613	
◆ULN-2212	Signetics	N2212	
◆ULN-2216	TI	SN76226	
◆ULN-2217	Motorola	MC1327	
		TDA1327	
	TI	SN76227	
◆ULN-2228	TI	SN76246	
◆ULN-2229	National	LM1848	
	RCA	CA3172	
◆ULN-2242	Sprague	UCN-5810	
ULN-2243	Sanyo	LA1150	
◆ULN-2244	Fairchild	µA705	
	Motorola	**MC1309**	**3614**
		MC1311	
	National	LM1800	
	RCA	CA3145	
		CA3195	
	Sanyo	LA705	
		LA758	
	Signetics	**µA758**	**3727**
	Sprague	ULN-3809	
		ULN-3812	
◆ULN-2244	TI	SN76111	
		SN76116	
◆ULN-2245	Fairchild	µA705	
	Motorola	**MC1309**	**3614**
		MC1311	
	National	LM1800	
	RCA	CA3145	
		CA3195	
	Sanyo	LA705	
		LA758	
	Signetics	**µA758**	**3727**
	Sprague	ULN-3809	
		ULN-3812	
	TI	SN76111	
		SN76116	
ULN-2249	Hitachi	HA1199	
ULN-2270	Fairchild	µA7327	
	SGS	TDA1170	
	Telefunken	TDA1170	
	ThomsonCSF	TDA1170	
◆ULN-2274	National	LM1877	
◆ULN-2278	National	LM377	
	TI	SN76177	
ULN-2280	National	LM380	
◆ULN-2281	National	LM384	
	Sprague	ULN-3784	
ULN-2290	RCA	CA1190	
	SGS	TDA1190	
		TDA1190Z	
		TDA3190	
ULN-2429	Cherry	CS166	
ULN-2541	RCA	CA3219	
ULN-2801	**Motorola**	**ULN2801**	**3212**
	RIFA	PBD353811	
	SGS	ULN2801	
	Toshiba	TD62081	
ULN-2802	**Motorola**	**ULN2802**	**3212**
	RIFA	PBD353814	
	SGS	ULN2802	
	Toshiba	TD62082	
ULN-2803	**Motorola**	**ULN2803**	**3212**
	RIFA	PBD353813	
	SGS	ULN2803	
	Toshiba	TD62083	
ULN-2804	**Motorola**	**ULN2804**	**3212**
	RIFA	PBD353812	
	SGS	ULN2804	
	Toshiba	TD62084	
ULN-2805	SGS	ULN2805	
ULN-2821	SGS	L601	
ULN-2822	SGS	L602	
ULN-2823	SGS	L603	
ULN-2824	SGS	L604	
ULN-3054	**Fairchild**	**µA3054**	**3575**
	Harris	**HC5554**	**3595**
	National	TP3054	
	Sierra	SC11301	
◆ULN-3304	Cherry	CS102	
◆ULN-3306	Cherry	CS122	
ULN-3701	National	LM2002	
		LM2002A	
		LM383	
		LM383A	
	Sprague	ULN-3702	
ULN-3702	National	LM2002	
		LM2002A	
		LM383	
		LM383A	
	Sprague	ULN-3701	
ULN-3703	Fairchild	TDA2003	
	ThomsonCSF	TDA2003	
ULN-3751	SGS	L165	
	SiliconG	SG1173	
ULN-3784	National	LM384	
ULN-3809	Fairchild	µA705	
	Motorola	**MC1309**	**3614**
		MC1311	
	National	LM1800	
	RCA	CA3145	
		CA3195	
	Sanyo	LA705	
		LA758	
	Signetics	**µA758**	**3727**
	Sprague	ULN-3812	
	TI	SN76111	
		SN76116	
◆ULN-3810	Exar	XR1310	
	National	LM1310	
	TI	SN76115	
	Toshiba	TA7157	
ULN-3812	Fairchild	µA705	
	Motorola	**MC1309**	**3614**

(Continued)

◆ Discontinued

The manufacturers report their devices can be used as direct replacements.
Performance details often differ, so compare the specifications considering your requirements.

Sprague Electric Company (Cont'd)

Manufacturer Device	Replacement Source	Device	IC Master Page
ULN-3812	Motorola	MC1311	
	National	LM1800	
	RCA	CA3145	
		CA3195	
	Sanyo	LA705	
		LA758	
	Signetics	**μA758**	3727
	Sprague	ULN-3809	
	TI	SN76111	
		SN76116	
ULN-3859	**Motorola**	**MC3359**	3613
◆ULN-3889	SGS	TCA3189	
ULN-8124	Cherry	CS3524	
	Exar	**XR3524**	3558
	IPS	**IP3524**	3599
		IP3524B	3599
	National	LM3524	
	RCA	CA3524	
	SGS	SG3524	
		UC3524A	
	Signetics	**SG3524**	3715,3720,3730
	SiliconG	SG3524B	
	TI	SG3524	
	Unitrode	**UC3524A**	3739,3739
ULN-8125	SiliconG	SG3525A	
	TI	SG3525	
	Unitrode	**UC3524A**	3739,3739
ULN-8126	**IPS**	**IP3526**	3599
	SiliconG	SG3526	
	Unitrode	UC3526	
ULN-8127	SiliconG	SG3527A	
	TI	SG3527	
	Unitrode	**UC3527A**	3739
ULN-8160	Ferranti	ZN1060	
	Signetics	**NE5560**	3713,3730
ULN-8161	Cherry	CS5561	
		CS5561N	
	IPS	**IP5561C**	3599
	Signetics	**NE5561**	3713,3730
ULN-8162	**Signetics**	**NE5562**	3713,3730
ULN-8163	Signetics	NE5563	
ULN-8194	Cherry	CS594	
	Fujitsu	**MB3759**	1611
	IPS	IP494	
	TI	**TL494M**	720
		TL594M	720
	Unitrode	**UC494A**	3739,3739
ULN-8195	Cherry	CS595	
	Fujitsu	**MB3760**	1611
ULN-8564	**Signetics**	**NE564**	3728
ULN2001A	SGS	ULN2001A	
ULN2003A	SGS	ULN2003A	
ULN2004A	SGS	ULN2004A	
ULN8126	**IPS**	**IP1526**	3599
	Motorola	**SG1526**	3626
		SG3526	3626
	SiliconG	SG1526	
	Sprague	ULQ8126	
		ULS8126	
	Unitrode	UC1526	
ULN8194A	Cherry	CS494M	
	Exar	**XR494**	3557
	Fairchild	μA494	
	IPS	**IP494A**	3599
	Motorola	TL494	
	Sprague	ULS-8194	
	TI	**TL494M**	720
		TL594M	720
	Unitrode	**UC494A**	3739,3739
ULQ-2001	Exar	XR2001	
		XR2001C	
		XR2201C	
	Mitsubishi	M54524	
	Motorola	**MC1411**	3212
		ULN2001	3212
	NEC	μPA2001	
	RIFA	PBD3523-11	
	Sanyo	LB1231	
	SGS	L201	
		ULN2001	
	SiliconG	SG2001	
	Sprague	**ULN-2001**	3269
	TI	ULN2001A	
	Toshiba	TD62001	
		TD62101	
ULQ-2002	Exar	XR2002	
	Motorola	MC1412T	
ULQ-2003	Exar	XR2003	
	Motorola	MC1413T	
	RIFA	PBD3523-13	
	SiliconG	SG2023	
	Sprague	ULN-2023	
	TI	SN75468	
ULQ-2004	Exar	XR2004	
	Motorola	MC1416T	
ULQ-8124	**Unitrode**	**UC2524**	3739
ULQ-8125	Cherry	CS2525A	
	Exar	XR2525A	
	IPS	**IP2525A**	3599
	LinearTech	LT2525A	
	Motorola	**SG2525A**	3626
	SiliconG	SG2525A	
	Siliconix	PWM25B	
	TI	SG2525A	
	Unitrode	**UC2525A**	3739
ULQ-8126	**IPS**	**IP2526**	3599
	Motorola	**SG2526**	3626
	SiliconG	SG2526	
	Unitrode	UC2526	
ULQ-8127	Siliconix	PWM27B	
	Unitrode	**UC2527A**	3739
ULQ-8194	**Fujitsu**	**MB3759**	1611
	TI	TL494I	
		TL594I	
ULQ-8195	**Fujitsu**	**MB3760**	1611
	TI	TL495I	
		TL595I	
ULQ8126	**IPS**	**IP1526**	3599
	Motorola	**SG1526**	3626
		SG3526	3626
	SiliconG	SG1526	
	Sprague	ULN8126	
		ULS8126	
	Unitrode	UC1526	
ULS-2001	SiliconG	SG2001	
ULS-2002	RIFA	PBD3524-14	
	SiliconG	SG2002	
		SG2022	
	Sprague	ULN-2022	
	TI	SN75467	
ULS-2003	SiliconG	SG2003	
ULS-2004	Exar	XR2204C	
	Mitsubishi	M54526	
	Motorola	**MC1416**	3212
		ULN2004	3212
	NEC	μPA2004	
	RIFA	PBD352302	
	Sanyo	LB1234	
	SGS	L204	
		ULN2004	
	Signetics	NE5604	
		ULN2004	3721
	SiliconG	SG2004	
	Sprague	ULN-2004	
	TI	ULN2004A	
	Toshiba	TD62004	
		TD62104	
ULS-2011	SiliconG	SG3851	
	SSS	SCM6113	
ULS-2012	SiliconG	SG2012	
ULS-2041	SiliconG	SG3854	
ULS-2045	Fairchild	UA3045	
	National	LM3045	
	Plessey	SL3086	
	Sanyo	LA3045	
ULS-8124	Cherry	CS1524	
	Exar	**XR1524**	3558
	IPS	**IP1524**	3599
	LinearTech	LT1524	
	National	LM1524	
	RCA	CA1524	
	SGS	SG1524	
		UC1524A	
	SiliconG	SG1524	
	TI	**SG1524**	720
	Unitrode	**UC1524A**	3739,3739
ULS-8125	Cherry	CS1525A	
	Exar	**XR1525A**	3559
	IPS	**IP1525A**	3599
	LinearTech	LT1525A	
	Motorola	**SG1525A**	3626
	SGS	SG1524A	
	SiliconG	SG1525A	
	Siliconix	PWM125	
	TI	SG1525A	
	Unitrode	**UC1525A**	3739
ULS-8126	**IPS**	**IP1526**	3599
	SiliconG	SG1526	
	Unitrode	UC526	
ULS-8127	SGS	SG1527	
	SiliconG	SG1527	
	Unitrode	**UC1527A**	3739
ULS-8160	**Signetics**	**SE5560**	3713,3730
ULS-8161	Cherry	CS5561S	
	IPS	**IP5561**	3599
	Signetics	**SE5561**	3713,3730
ULS-8162	**Signetics**	**SE5562**	3713
ULS-8163	Signetics	SE5563	
ULS-8194	Cherry	CS494M	
	Exar	**XR494**	3557
	Fairchild	μA494	
	IPS	**IP494A**	3599
	Motorola	TL494	
	Sprague	ULN8194A	
	TI	**TL494M**	720
		TL594M	720
	Unitrode	**UC494A**	3739,3739
ULS-8195	TI	TLS9SM	
	Unitrode	**UC495A**	3739,3739
ULS8126	**IPS**	**IP1526**	3599
	Motorola	**SG1526**	3626
		SG3526	3626
	SiliconG	SG1526	
	Sprague	ULN8126	
		ULQ8126	
	Unitrode	UC1526	
◆ULX-3905	Hitachi	HA1148	
	RCA	CA3217	
◆US5438	Sprague	UDS-0408	
◆US5439	Sprague	UDS-0408	
◆US7438	**Sprague**	**UHP-408**	3269
◆US7439	**Sprague**	**UHP-408**	3269

Sprague Solid State

Manufacturer Device	Replacement Source	Device	IC Master Page
883C21C16	AMD	AM9128	
		AM9218	
	Cypress	CY7C128	
	Fujitsu	MB8128	
		MB8416	
	Harris	HM6116	
		HM6516	
	IDT	IDT6116	
	Intel	2128	
	MicroPwr	MP6116	
	Mitsubishi	M58275	
		M5M116	
		M5M5116	
		M5M5117	
		M5M5118	
		MS8725	
	Motorola	MCM2016	
		MCM2016H	
		MCM2128	
		MCM6116	4119
		MCM61L16	4119
		MCM65116	
	National	MMC2116	
	NEC	μPD4016	
	OKI	MSM2128	
		MSM5128	4732,4733
	RCA	MWS6116A	
	SSS	BCM21C16	
		SCM21C16	
		SCM6116	
	TI	TMS4016	
	ThomsonCSF	ET2128	
	Toshiba	**TC5516A**	4263
		TMM2015A	
		TMM2016	
		TMM2016A	4263
	Samsung	KM6816	
	UMC	UM2128	
	Universal	US574HC133	
BCM21C16	AMD	AM9128	
		AM9218	
	Cypress	CY7C128	
	Fujitsu	MB8128	
		MB8416	
	Harris	HM6116	
		HM6516	
	IDT	IDT6116	
	Intel	2128	
	MicroPwr	MP6116	
	Mitsubishi	M58275	
		M5M116	
		M5M5116	
		M5M5117	
		M5M5118	
		MS8725	
	Motorola	MCM2016	
		MCM2016H	
		MCM2128	
		MCM6116	4119
		MCM61L16	4119
		MCM65116	
	National	MMC2116	
	NEC	μPD4016	
	OKI	MSM2128	
		MSM5128	4732,4733
	RCA	MWS6116A	
	SSS	883C21C16	
		SCM21C16	
		SCM6116	
	TI	TMS4016	
	ThomsonCSF	ET2128	
	Toshiba	**TC5516A**	4263
		TMM2015A	
		TMM2016	
		TMM2016A	4263
	Samsung	KM6816	
	UMC	UM2128	
	Universal	US574HC133	
SCL4000	Motorola	MC14000	
	National	CD4000	
	RCA	CD4000	
	SGS	HCC/HCF4000	
	Signetics	HEF400	
	Solitron	CM4000	
SCL4001	Fairchild	F4001	
	Motorola	MC14001	
	National	CD4001	
		MM74C02	
	OKI	MSM4001	
	RCA	CD4001	
	Sanyo	LC4001B	
	SGS	HCC/HCF4001	
	Signetics	HEF4001	
	Solitron	CM4001	
	Toshiba	TC4001	
SCL4002	Fairchild	F4002	
	Motorola	MC14002	
	National	CD4002	
	RCA	CD4002	
	SGS	HCC/HCF4002	
	Signetics	HEF4002	
	Solitron	CM4002	
	Toshiba	TC4002	
SCL4006	Fairchild	F4006	
	National	CD4006	
	RCA	CD4006	
	SGS	HCC/HCF4006	
	Signetics	HEF4006	
	Solitron	CM4006	
	Toshiba	TC4006	
SCL4007	Fairchild	F4007	
	Motorola	MC14007	
	National	CD4007	
	RCA	CD4007	
	SGS	HCC/HCF4007	
	Signetics	HEF4007	
	Solitron	CM4007	
	Toshiba	TC4007	
SCL4008	Fairchild	F4008	
	Motorola	MC14008	
	National	CD4008	
		MM74C83	
	RCA	CD4008	
	SGS	HCC/HCF4008	
	Signetics	HEF4008	
	Solitron	CM4008	
	Toshiba	TC4008	
SCL4009	National	CD4009	
	RCA	CD4009	
	SGS	HCC/HCF4009	
	Solitron	CM4009	
	Toshiba	TC4009	
SCL4010	National	CD4010	
	RCA	CD4010	
	SGS	HCC/HCF4010	
	Solitron	CM4010	
	Toshiba	TC4010	
SCL4011	Fairchild	F4011	
	Motorola	MC14011	
	National	CD4011	
		MM74C00	
	OKI	MSM4011	
	RCA	CD4011	

(Continued)

◆ Discontinued

Bold face device numbers indicate manufacturers data is provided in the IC Master on the pages noted.

Sprague Solid State (Cont'd)

Manufacturer Device	Replacement Source	Device	IC Master Page
SCL4011	Sanyo	LC4011	
	SGS	HCC/HCF4011	
	Signetics	HEF4011	
	Solitron	CM4011	
	Toshiba	TC4011	
SCL4012	Fairchild	F4012	
	Motorola	MC14012	
	National	CD4012	
	RCA	CD4012	
	SGS	HCC/HCF4012	
	Signetics	HEF4012	
	Solitron	CM4012	
	Toshiba	TC4012	
SCL4013	Fairchild	F4013	
	Motorola	MC14013	
	National	CD4013	
		MM74C74	
	OKI	MSM4013	
	RCA	CD4013	
	Sanyo	LC4013	
	SGS	HCC/HCF4013	
	Signetics	HEF4013	
	Solitron	CM4013	
	Toshiba	TC4013	
SCL4014	Fairchild	F4014	
	Motorola	MC14014	
	National	CD4014	
	RCA	CD4014	
	SGS	HCC/HCF4014	
	Signetics	HEF4014	
	Solitron	CM4014	
	Toshiba	TC4014	
SCL4015	Fairchild	F4015	
	Motorola	MC14015	
	National	CD4015	
		MM74C164	
	OKI	MSM4015	
	RCA	CD4015	
	Sanyo	LC4015	
	SGS	HCC/HCF4015	
	Signetics	HEF4015	
	Solitron	CM4015	
	Toshiba	TC4015	
SCL4016	Fairchild	F4016	
		F4066	
	Motorola	MC14016	
		MC14066	
	National	CD4016	
		CD4066	
	RCA	CD4016	
		CD4066	
	Sanyo	LC4016	
		LC4066	
	SGS	HCC/HCF4016	
		HCC/HCF4066	
	Signetics	HEF4016	
		HEF4066	
	Solitron	CM4016	
		CM4066	
		HCF4016	
	SSS	SCL4066	
	Toshiba	TC4016	
		TC4066	
SCL4017	Fairchild	F4017	
	Motorola	MC14017	
	National	CD4017	
	RCA	CD4017	
	SGS	HCC/HCF4017	
	Signetics	HEF4017	
	Solitron	CM4017	
	Toshiba	TC4017	
SCL4018	Fairchild	F4018	
	Motorola	MC14018	
	National	CD4018	
	RCA	CD4018	
	SGS	HCC/HCF4018	
	Signetics	HEF4018	
	Solitron	CM4018	
	Toshiba	TC4018	
SCL4019	Fairchild	F4019	
	National	CD4019	
	OKI	MSM4019	
	RCA	CD4019	
	Sanyo	LC4019	
	SGS	HCC/HCF4019	
	Signetics	HEF4019	
	Solitron	CM4019	
	Toshiba	TC4019	
SCL4020	Fairchild	F4020	
	Motorola	MC14020	
SCL4020	National	CD4020	
	RCA	CD4020	
	SGS	HCC/HCF4020	
	Signetics	HEF4020	
	Solitron	CM4020	
	Toshiba	TC4020	
SCL4021	Fairchild	F4021	
	Motorola	MC14021	
	National	CD4021	
	RCA	CD4021	
	SGS	HCC/HCF4021	
	Signetics	HEF4021	
	Toshiba	TC4021	
SCL4022	Fairchild	F4022	
	Motorola	MC14022	
	National	CD4022	
	RCA	CD4022	
	SGS	HCC/HCF4022	
	Signetics	HEF4022	
	Solitron	CM4022	
	Toshiba	TC4022	
SCL4023	Fairchild	F4023	
	Motorola	MC14023	
	National	CD4023	
		MM74C10	
	RCA	CD4023	
	SGS	HCC/HCF4023	
	Signetics	HEF4023	
	Solitron	CM4023	
	Toshiba	TC4023	
SCL4024	Fairchild	F4024	
	Motorola	MC14024	
	National	CD4024	
	RCA	CD4024	
	SGS	HCC/HCF4024	
	Signetics	HEF4024	
	Solitron	CM4024	
	Toshiba	TC4024	
SCL4025	Fairchild	F4025	
	Motorola	MC14025	
	National	CD4025	
	RCA	CD4025	
	SGS	HCC/HCF4025	
	Signetics	HEF4025	
	Solitron	CM4025	
	Toshiba	TC4025	
SCL4026	RCA	CD4026	
	SGS	HCC/HCF4026	
	Solitron	CM4026	
SCL4027	Fairchild	F4027	
	Motorola	MC14027	
	National	CD4027	
		MM74C76	
	OKI	MSM4027	
	RCA	CD4027	
	Sanyo	LC4027	
	SGS	HCC/HCF4027	
	Signetics	HEF4027	
	Solitron	CM4027	
SCL4028	Fairchild	F4028	
	Motorola	MC14028	
	National	CD4028	
		MM74C42	
	OKI	MSM4028	
	RCA	CD4028	
	Sanyo	LC4028	
	SGS	HCC/HCF4028	
	Signetics	HEF4028	
	Solitron	CM4028	
	Toshiba	TC4028	
SCL4029	Fairchild	F4029	
	Motorola	MC14029	
	National	CD40192	
		CD4029	
	RCA	CD40192	
		CD4029	
	SGS	HCC/HCF40192	
		HCC/HCF4029	
	Signetics	HEF40192	
	Solitron	CM4029	
	SSS	SCL4192	
	Toshiba	TC40192	
		TC4029	
SCL4030	Fairchild	F4030	
	National	CD4030	
	RCA	CD4030	
	SGS	HCC/HCF4030	
	Signetics	HEF4030	
	Solitron	CM4030	
	Toshiba	TC4030	
SCL4033	RCA	CD4033	
	SGS	HCC/HCF4033	
	Solitron	CM4033	
SCL4034	Fairchild	F4034	
	Motorola	MC14034	
	National	CD4034	
	RCA	CD4034	
	SGS	HCC/HCF4034	
	Solitron	CM4034	
	Toshiba	TC4034	
SCL4040	Fairchild	F4040	
	Motorola	MC14040	
	National	CD4040	
	RCA	CD4040	
	SGS	HCC/HCF4040	
	Signetics	HEF4040	
	Solitron	CM4040	
	Toshiba	TC4040	
SCL4041	Fairchild	F4041	
	National	CD4041	
	RCA	CD4041	
	SGS	HCC/HCF4041	
	Signetics	HEF4041	
	Solitron	CM4041	
SCL4042	Fairchild	F4042	
	Motorola	MC14042	
	National	CD4042	
	RCA	CD4042	
	SGS	HCC/HCF4042	
	Signetics	HEF4042	
	Solitron	CM4042	
	Toshiba	TC4042	
SCL4043	Motorola	MC14043	
	National	CD4043	
	RCA	CD4043	
	SGS	HCC/HCF4043	
	Signetics	HEF4043	
	Solitron	CM4043	
	Toshiba	TC4043	
SCL4046	Fairchild	F4046	
	Motorola	MC14046	
	National	CD4046	
	RCA	CD4046	
	SGS	HCC/HCF4046	
	Solitron	CM4046	
SCL4047	Fairchild	F4047	
	National	CD4047	
	RCA	CD4047	
	SGS	HCC/HCF4047	
	Signetics	HEF4047	
	Solitron	CM4047	
	Toshiba	TC4047	
SCL4049	Fairchild	F4049	
	Motorola	MC14049	
	National	CD4049	
	OKI	MSM4049	
	RCA	CD4049	
	Sanyo	LC4049	
	SGS	HCC/HCF4049	
	Signetics	HEF4049	
	Solitron	CM4049	
	Toshiba	TC4049	
SCL4050	Fairchild	F4050	
	Motorola	MC14050	
	National	CD4050	
	RCA	CD4050	
	SGS	HCC/HCF4050	
	Signetics	HEF4050	
	Solitron	CM4050	
	Toshiba	TC4050	
SCL4051	Fairchild	F4051	
	Motorola	MC14051	
	National	CD4051	
	RCA	CD4051	
	SGS	HCC/HCF4051	
	Signetics	HEF4051	
	Solitron	CM4051	
	Toshiba	TC4051	
SCL4052	AD	AD7502	
	Datel	MVD409	
	Harris	HI1828A	
	MicroPwr	MP7502	
	National	CD4052	
	Solitron	CM4052	
	Toshiba	TC4052	
SCL4052B	Motorola	MC14052B	
	National	CD4052B	
SCL4053	Fairchild	F4053	
	Motorola	MC14053	
	National	CD4053	
	RCA	CD4053	
	SGS	HCC/HCF4053	
SCL4053	Signetics	HEF4053	
	Solitron	CM4053	
	Toshiba	**TC4053B**	**1363**
SCL4060	Motorola	MC14060	
	National	CD4060	
	RCA	CD4060	
	SGS	HCC/HCF4060	
	Signetics	HEF4060	
SCL4066	Fairchild	F4016	
		F4066	
	Motorola	MC14016	
		MC14066	
	National	CD4016	
		CD4066	
	RCA	CD4016	
		CD4066	
	Sanyo	LC4016	
		LC4066	
	SGS	HCC/HCF4016	
		HCC/HCF4066	
	Signetics	HEF4016	
		HEF4066	
	Solitron	CM4016	
		CM4066	
		HCF4016	
	SSS	SCL4016	
	Toshiba	TC4016	
		TC4066	
SCL4068	Fairchild	F4068	
	Motorola	MC14068	
	RCA	CD4068	
	SGS	HCC/HCF4068	
	Signetics	HEF4068	
	Solitron	CM4068	
	Toshiba	TC4068	
SCL4069	Fairchild	F4069	
	Motorola	MC14069	
	National	CD4069	
		MM54C04	
		MM74C04	
	OKI	MSM4069	
	RCA	CD4069	
	Sanyo	LC4069	
	SGS	HCC/HCF4069	
	Signetics	HEF4069	
	Solitron	CM4069	
	SSS	SCL4449	
	Toshiba	TC4069	
SCL4070	Fairchild	F4070	
	Motorola	MC14070	
	National	CD4070	
		MM74C86	
	RCA	CD4070	
	SGS	HCC/HCF4070	
	Signetics	HEF4070	
	Solitron	CM4070	
SCL4071	Fairchild	F4071	
	Motorola	MC14071	
	National	CD4071	
		MM74C32	
	OKI	MSM4071	
	RCA	CD4071	
	Sanyo	LC4071	
	SGS	HCC/HCF4071	
	Signetics	HEF4071	
	Solitron	CM4071	
	Toshiba	TC4071	
SCL4072	Fairchild	F4072	
	Motorola	MC14072	
	National	CD4072	
	RCA	CD4072	
	SGS	HCC/HCF4072	
	Signetics	HEF4072	
	Toshiba	TC4072	
SCL4073	Fairchild	F4073	
	Motorola	MC14073	
	National	CD4073	
	RCA	CD4073	
	SGS	HCC/HCF4073	
	Signetics	HEF4073	
	Solitron	CM4073	
	Toshiba	TC4073	
SCL4075	Fairchild	F4075	
	Motorola	MC14075	
	National	CD4075	
	RCA	CD4075	
	SGS	HCC/HCF4075	
	Signetics	HEF4075	
	Solitron	CM4075	
	Toshiba	TC4075	
SCL4076	Fairchild	F4076	
	Motorola	MC14076	

(Continued)

◆ Discontinued

The manufacturers report their devices can be used as direct replacements.
Performance details often differ, so compare the specifications considering your requirements.

Sprague Solid State (Cont'd)

Manufacturer Device	Replacement Source	Device	IC Master Page
SCL4076	National	CD4076	
		MM54C173	
		MM74C173	
	RCA	CD4076	
	SGS	HCC/HCF4076	
	Signetics	HEF4076	
	Solitron	CM4076	
	Toshiba	TC4076	
SCL4077	Fairchild	F4077	
	Motorola	MC14077	
	National	CD4077	
	RCA	CD4077	
	SGS	HCC/HCF4077	
	Signetics	HEF4077	
	Solitron	CM4077	
SCL4078	Fairchild	F4078	
	Motorola	MC14078	
	RCA	CD4078	
	SGS	HCC/HCF4078	
	Signetics	HEF4078	
	Solitron	CM4078	
	Toshiba	TC4078	
SCL4081	Fairchild	F4081	
	Motorola	MC14081	
	National	CD4081	
		MM74C08	
	OKI	MSM4081	
	RCA	CD4081	
	Sanyo	LC4081	
	SGS	HCC/HCF4081	
	Signetics	HEF4081	
	Solitron	CM4081	
	Toshiba	TC4081	
SCL4082	Fairchild	F4082	
	Motorola	MC14082	
	National	CD4082	
	RCA	CD4082	
	SGS	HCC/HCF4082	
	Signetics	HEF4082	
	Toshiba	TC4082	
SCL4085B	Motorola	MC14506B	
	National	CD4085B	
	RCA	**CD4085B**	**704,1145**
SCL4086B	Motorola	MC14506B	
	RCA	**CD4086B**	**704,1145**
	SGS	HCC/HCF4086	
	Signetics	HEF4086B	
SCL4093B	Fairchild	F4093B	
	Motorola	MC14093B	
	National	CD4093B	
	RCA	**CD4093B**	**704,1145**
SCL4094B	Motorola	MC14094B	
	RCA	CD4094B	
SCL4099B	Motorola	MC14099B	
	National	CD4099B	
	RCA	**CD4099B**	**704,1146**
SCL4160	Fairchild	F40160	
	Motorola	MC14160	
	National	CD40160	
	RCA	CD40160	
SCL4161	Fairchild	F40161	
	Motorola	MC14161	
	National	CD40161	
	RCA	CD40161	
SCL4162	Fairchild	F40162	
	Motorola	MC14162B	
	National	CD40162	
	RCA	CD40162	
SCL4163	Fairchild	F40163	
	Motorola	MC14163B	
	National	CD40163	
	RCA	CD40163	
SCL4174B	Fairchild	F40174B	
	Motorola	MC14174B	
	National	CD40174B	
	RCA	**CD40174B**	**704,1146**
SCL4192	Fairchild	F4029	
	Motorola	MC14029	
	National	CD40192	
		CD4029	
	RCA	CD40192	
		CD4029	
	SGS	HCC/HCF40192	
		HCC/HCF4029	
	Signetics	HEF40192	
	Solitron	CM4029	
	SSS	SCL4029	
	Toshiba	TC40192	
		TC4029	
SCL4193	Fairchild	F40193	
	National	CD40193	
		MM54C193	
		MM74C193	
	RCA	CD40193	
	SGS	HCC/HCF40193	
	Signetics	HEF40193	
	Toshiba	**TC40193**	**1363**
SCL4402	National	CD4048	
	RCA	CD4048	
	SGS	HCC/HCF4048	
	Solitron	CM4048	
SCL4445	Fairchild	F4521	
	Motorola	MC14521	
	RCA	CD4045	
	SGS	HCC/HCF4045	
	Signetics	HEF4521	
	Solitron	CM4045	
	Toshiba	TC4521	
SCL4449	Fairchild	F4069	
	Motorola	MC14069	
	National	CD4069	
		MM54C04	
		MM74C04	
	OKI	MSM4069	
	RCA	CD4069	
	Sanyo	LC4069	
	SGS	HCC/HCF4069	
	Signetics	HEF4069	
	Solitron	CM4069	
	SSS	SCL4069	
	Toshiba	TC4069	
SCL4502	Motorola	MC14502	
	RCA	CD4502	
	SGS	HCC/HCF4502	
	Signetics	HEF4502	
SCL4504B	Motorola	MC14504B	
SCL4508	Motorola	MC14508	
	National	DM74147	
	RCA	CD4508	
	SGS	HCC/HCF4508	
	Signetics	**74147**	**1157**
		HEF4508	
		N82147	
	Solitron	CM4508	
	TI	SN74147	
	Toshiba	TC4508	
SCL4510	Fairchild	F4510	
	Motorola	MC14510	
	National	CD4510	
	RCA	CD4510	
	SGS	HCC/HCF4510	
	Signetics	HEF4510	
	Solitron	CM4510	
	Toshiba	TC4510	
SCL4511	Fairchild	F4511	
	Mitel	MD4511	
	MMI	4511	
	Motorola	MC14511	
	National	CD4511	
	NEC	μPD4511	
	RCA	CD4511	
	SGS	HCC/HCF4511	
	Signetics	HEF4511	
	Solitron	CM4511	
	Toshiba	TC4511	
SCL4512	Fairchild	F4512	
	Motorola	MC14512	
	National	CD4512	
	RCA	CD4512	
	SGS	HCC/HCF4512	
	Toshiba	TC4512	
SCL4514	Fairchild	F4514	
	Motorola	MC14514	
	National	CD4514	
	RCA	CD4514	
	SGS	HCC/HCF4514	
	Signetics	HEF4514	
	Solitron	CM4514	
	Toshiba	TC4514	
SCL4515	Fairchild	F4515	
	Motorola	MC14515	
	National	CD4515	
	RCA	CD4515	
	SGS	HCC/HCF4515	
	Signetics	HEF4515	
	Solitron	CM4515	
	Toshiba	TC4515	
SCL4516	Fairchild	F4516	
	Motorola	MC14516	
	National	CD4516	
	RCA	CD4516	
			(Continued)
SCL4516	SGS	HCC/HCF4516	
	Signetics	HEF4516	
	Solitron	CM4516	
	Toshiba	TC4516	
SCL4517	Motorola	MC14517	
	RCA	CD4517	
	SGS	HCC/HCF4517	
	Signetics	HEF4517	
SCL4518	Fairchild	F4518	
	Motorola	MC14518	
	National	CD4518	
	RCA	CD4518	
	SGS	HCC/HCF4518	
	Signetics	HEF4518	
	Solitron	CM4518	
	Toshiba	TC4518	
SCL4520	Fairchild	F4520	
	Motorola	MC14520	
	National	CD4520	
	OKI	MSM4520	
	RCA	CD4520	
	Sanyo	LC4520	
	SGS	HCC/HCF4520	
	Signetics	HEF4520	
	Solitron	CM4520	
	Toshiba	TC4520	
SCL4522	Fairchild	F4522	
	Motorola	MC14522B	
	National	CD4522	
	RCA	CD4522	
SCL4526	Fairchild	F4526	
	Motorola	MC14526	
	National	CD4526	
	Signetics	HEF4526	
	Toshiba	TC4526	
SCL4527	Fairchild	F4527	
	Motorola	MC14527	
	National	CD4527	
	RCA	CD4527	
	SGS	HCC/HCF4527	
	Signetics	HEF4527	
	Toshiba	TC4527	
SCL4528	Fairchild	F4528	
	Motorola	MC14528	
	National	CD4528	
		MM74C221	
	RCA	CD4098	
	SGS	HCC/HCF4098	
	Signetics	HEF4528	
	Toshiba	TC4528	
SCL4531	Fairchild	F4531	
	Motorola	MC14531	
	RCA	CD40101	
	SGS	HCC/HCF40101	
	Signetics	HEF4531	
	Toshiba	TC4531	
SCL4532	Fairchild	F4532	
	Motorola	MC14532	
	RCA	CD4532	
	SGS	HCC/HCF4532	
	Signetics	HEF4532	
	Toshiba	TC4532	
SCL4555	Fairchild	F4555	
	Motorola	MC14555	
	RCA	CD4555	
	SGS	HCC/HCF4555	
	Signetics	HEF4555	
	Toshiba	TC4555	
SCL4556	Fairchild	F4556	
	Motorola	MC14556	
	RCA	CD4556	
	SGS	HCC/HCF4556	
	Signetics	HEF4556	
	Toshiba	TC4556	
SCL4581	Motorola	MC14581	
	National	74C181	
	RCA	CD40181	
		CD4057	
	SGS	HCC/HCF40181	
SCL4582	Fairchild	F4582	
	Motorola	MC14582	
	National	74C182	
	RCA	CD40182	
	SGS	HCC/HCF40182	
SCL4584	Fairchild	F40014	
	Motorola	MC14584	
	National	CD40106	
		CD4584	
		MM54C14	
		MM74C14	
	RCA	CD40106	
			(Continued)
SCL4584	SGS	HCC/HCF40106	
	Signetics	HEF40106	
SCL4585	Fairchild	F40085	
	Motorola	MC14585	
	National	MM74C85	
	RCA	CD4585	
	SGS	HCC/HCF4585	
	Signetics	HEF4585	
	Toshiba	TC4585	
SCL4S43B	Fairchild	F4543	
	Motorola	MC14543	
		MC14543B	
	National	CD4543	
	RCA	CD4543	
	Signetics	HEF4543	
	Toshiba	TC4543	
SCM2114A	AMD	AM9114	
	Fairchild	F2114	
	Hitachi	HM472114	
	Intel	2114	
		2114A	
	Mitsubishi	M5L2114	
	Motorola	M5L2114	
		MCM2114	
		MCM21L14	
	National	NMC2114A	
	OKI	MSM2114	
	SSS	SCM21C14	
	Synertek	SY2114	
	Toshiba	TMM2114A	
		TMM314A	
	UMC	UM2114	
SCM21C14	AMD	AM9114	
	Fairchild	F2114	
	Hitachi	HM472114	
	Intel	2114	
		2114A	
	Mitsubishi	M5L2114	
	Motorola	M5L2114	
		MCM2114	
		MCM21L14	
	National	NMC2114A	
	OKI	MSM2114	
	SSS	SCM2114A	
	Synertek	SY2114	
	Toshiba	TMM2114A	
		TMM314A	
	UMC	UM2114	
SCM21C16	AMD	AM9128	
		AM9218	
	Cypress	CY7C128	
	Fujitsu	MB8128	
		MB8416	
	Harris	HM6116	
		HM6516	
	IDT	IDT6116	
	Intel	2128	
	MicroPwr	MP6116	
	Mitsubishi	M58275	
		M5M116	
		M5M5116	
		M5M5117	
		M5M5118	
		MS8725	
	Motorola	MCM2016	
		MCM2016H	
		MCM2128	
		MCM6116	**4119**
		MCM61L16	**4119**
		MCM65116	
	National	MMC2116	
	NEC	μPD4016	
	OKI	MSM2128	
		MSM5128	**4732,4733**
	RCA	MWS6116A	
	SSS	883C21C16	
		BCM21C16	
		SCM6116	
	TI	TMS4016	
	ThomsonCSF	ET2128	
	Toshiba	**TC5516A**	**4263**
		TMM2015A	
		TMM2016	
		TMM2016A	**4263**
	Samsung	KM6816	
	UMC	UM2128	
	Universal	US574HC133	
SCM23C128	AMD	AM92128	
	GI	R09128	
		SPR-128	
	GouldAMI	S23128	
			(Continued)

◆ Discontinued

Bold face device numbers indicate manufacturers data is provided in the IC Master on the pages noted.

Sprague Solid State (Cont'd)

Manufacturer Device	Replacement Source	Device	IC Master Page
SCM23C128	GouldAMI	S3630A	
	GTEMicro	G53128	
	Hitachi	HN613128	
		HN613128P	
	Mitsubishi	M5M23128	
	Motorola	MCM63128	
	NCR	NCR23128	
	NEC	UPD23128	
		UPD23128A	
		UPD23128E	
		UPD23C128	
		UPD23C128E	
	RCA	**CDM53128**	**1673,1677**
	Rockwell	R23128	
	Signetics	23128	
	Supertex	CM1310	
	Synertek	SY23128	
	Toshiba	TMM23128	
	UMC	UM23128	
	VTI	23131	
		VT23128	
		VT23129	
		VT23129A	
		VT23130	
		VT23138	
SCM23C256	AMD	AM92256	
	Fujitsu	MB83256	
	GI	R09256	
	GouldAMI	S23256	
		S38256	
	GTEMicro	G53256	
	Hitachi	HN613256	
	Mitsubishi	M5M23256	
	Mostek	MK38000	
	Motorola	MCM63256	
		MCM65256	
	NCR	NCR23256	
		NCR23257	
	NEC	UPD23256	
		UPD23256A	
		UPD23C256E	
	OKI	**MSM38256**	**4733**
	Panasonic	MN23256	
		MN23257	
	RCA	CDM52356	
		CDM53256	**1673,1678**
	S-MOS	**SMM2326**	**4178**
		SMM6325	**4178**
		SMM6326	**4178**
	Signetics	23256	
		23256A	
	Supertex	CM2560	
	Toshiba	**TMM23256**	**4263**
	UMC	UM23256	
	VTI	23257	
		VT23256	
		VT23257	
SCM23C32	AMD	AM9232	
	CSG	MPS2332	
	Fairchild	F3532	
	GI	R03-9332	
	GouldAMI	S2333	
		S68A332	
	GTEMicro	G2332	
	Hitachi	HN46332	
	Intech	IM7332	
	Intel	2332	
	Mitsubishi	M58333	
	Motorola	**MCM68A332**	**4120**
	National	NM52132	
	NCR	NCR2332	
	NEC	UPD2332A	
	Panasonic	MN2332	
	RCA	**CDM5333**	**1673,1677**
	Rockwell	R2332	
	SGS	M2332	
	Sharp	LH2332	
	Siemens	SA88332	
		SAB8332	
	Signetics	2332	
		2632A	
	SiliconG	SG3532	
	SMC	ROM4732	
	Supertex	23SC32	
		CM3200	
	Synertek	SY2332	
	TI	TM2332	
		(Continued)	
SCM23C32	TI	TMS2332	
		TMS4732	
	Toshiba	TMM2332	
		TMM333P	
	VTI	VT2332	
SCM23C33	Amperex	AM9233	
	CSG	MPS2333	
	Fairchild	F3533	
	GI	R03-9333	
	GouldAMI	S2333	
	NEC	UPD23328	
	RCA	**CDM5332**	**1673,1677,1678**
	Signetics	2332	
	Supertex	23C32	
	Synertek	SY2333	
	Toshiba	TMM2332	
	Universal	UM2333	
SCM23C64	AMD	9264	
	GI	R03-9364	
	GouldAMI	S68A364	
	Hitachi	HN48364	
	Intech	IM7364	
	MicroPwr	MP2364C	
	Mitsubishi	M58334	
	Mostek	MK36000	
	Motorola	**MCM68364**	**4120**
		MCM68365	**4120**
		MCM68366	**4120**
	National	MM52164	
	NEC	UPD2364	
	Rockwell	R2364A	
	SGS	M2362	
		M36000	
	Signetics	2664	
		26S64	
	SMC	ROM36000	
	Synertek	SY2364/A	
	TI	TMS4764	
	Toshiba	TMM2366	
SCM23C65	AMD	AM9265	
	Fairchild	F3568	
		F3569	
		F3570	
	GI	R03-9365	
		R09864	
	GouldAMI	S2364	
		S6364	
	GTEMicro	G5364	
	Hitachi	HN61364	
	Intel	2364A	
	Mitsubishi	M5M2364	
		M5M2365	
		M5M23C64	
	Mostek	MK37000	
	Motorola	MCM68369	
		MCM68370	
	National	MM52264	
		NM52264	
	OKI	**MSM3864**	**4733**
	Panasonic	MN2364	
		MN4864	
	RCA	**CDM5365**	**1673,1677**
	Rockwell	R2364B	
	Supertex	23SC64	
		23SC64/A	
		CM6400	
	Synertek	SY2365/A	
	TI	TMS2364	
		TMS4764	
	Toshiba	TMM2365	
	UMC	UM2366	
	VTI	VT2365	
SCM27C128	AMD	AM27256	
	Fujitsu	MBM27256	
		MBM27C256	
	GI	R09256	
	Hitachi	HM4827256	
		HN27256	
		HN27C256	**4037**
	Intel	27256	
		27C256	**4079**
	Mitsubishi	M5L27256	
		MSL27256	
	Motorola	MCM67256	
	National	NMC27C256	
	NEC	MPD27256	
		UPD27256	
		UPD27C256	
		UPD27C256A	
	SEEQ	27256	
		(Continued)	
SCM27C128	SEEQ	27C256	
	SGS	M27256	
	Toshiba	TC57256	
		TMM27256	
		TMM27C256	
	VTI	**VT27C256**	**4265,4273**
SCM27C64	AMD	AM2764	
	Fujitsu	MBM2764	
		MBM27C64	
	Hitachi	HM482764	
		HN2764	
		HN27C64	
		HN482764	
	Intel	2764	
		2764A	
		27C64	**4078**
		87C64	**4078**
	Mitsubishi	M5L2764	
	NEC	UPD2764	
		UPD27C64	
	OKI	MSM2764	
		MSM2764A	**4732**
		MSM27C64	
	Rockwell	R2764	
		R27C64	
		R87C64	
	S-MOS	SPM27C64	
	SEEQ	2764	
		5133	
	SGS	M2764	
	Signetics	27C64	
	TI	TMS27C64	
	ThomsonCSF	ET2764	
	Toshiba	**TMM2764**	**4263**
SCM5101	GouldAMI	S5101	
		S6501	
	Harris	MH6501	
	Hitachi	HM435101	
	Intel	5101	
	Motorola	MCM5101	
		MCMS1L01	
	National	MM74C920	
	Panasonic	MNS101	
	RCA	**MWS5101**	**1673,1676**
	Sharp	LH5101	
	Synertek	SY2101	
	Toshiba	TC5501	
SCM6113	SiliconG	SG3851	
	Sprague	ULS-2011	
SCM6116	AMD	AM9128	
		AM9218	
	Cypress	CY7C128	
	Fujitsu	MB8128	
		MB8416	
	Harris	HM6116	
		HM6516	
	IDT	IDT6116	
	Intel	2128	
	MicroPwr	MP6116	
	Mitsubishi	M58275	
		M5M116	
		M5M5116	
		M5M5117	
		M5M5118	
		MS8725	
	Motorola	MCM2016	
		MCM2016H	
		MCM2128	
		MCM6116	**4119**
		MCM61L16	**4119**
		MCM65116	
	National	MMC2116	
	NEC	μPD4016	
	OKI	MSM2128	
		MSM5128	**4732,4733**
	RCA	MWS6116A	
	SSS	883C21C16	
		BCM21C16	
		SCM21C16	
	TI	TMS4016	
	ThomsonCSF	ET2128	
	Toshiba	**TC5516A**	**4263**
		TMM2015A	
		TMM2016	
		TMM2016A	**4263**
	Samsung	KM6816	
	UMC	UM2128	
	Universal	US574HC133	
SCMG116	AMD	AM9218	
◆SCP1835	Hughes	HCMP1835	
	RCA	CDP1835	
SN54HC137	Motorola	MC54HC137	
	National	MM54HC137	
	RCA	**CD54HC137**	**1150**
	SSS	SS54HC137	
	TI	**SN54HC137**	**714**
SN54HC237	Motorola	MC54HC237	
	National	MM54HC237	
	RCA	**CD54HC237**	**1150**
	TI	**SN54HC237**	**714**
◆SND5027	SMC	CRT5027	
	TI	TMS9927	
◆SND5037	SMC	CRT5037	
	TI	TMS9937	
◆SND8002	SMC	CRT8002	
SS54HC00	**Motorola**	**MC54HC00**	**1122**
	National	MM54HC00	
	RCA	**CD54HC00**	**1149**
	Signetics	54HC00	
◆SS54HC02	**Motorola**	**MC54HC02**	**1122**
	National	MM54HC02	
	RCA	**CD54HC02**	**1149**
	Signetics	54HC02	
◆SS54HC04	**Motorola**	**MC54HC04**	**1124**
	National	MM54HC04	
	RCA	**CD54HC04**	**1149**
	Signetics	54HC04	
SS54HC137	Motorola	MC54HC137	
	National	MM54HC137	
	RCA	**CD54HC137**	**1150**
	SSS	SN54HC137	
	TI	**SN54HC137**	**714**
SS54HC138	**Motorola**	**MC54HC138**	**1130**
	National	MM54HC138	
	RCA	**CD54HC138**	**1150**
	Signetics	54HC138	
	TI	**SN54HC138**	**714**
SS54HC139	**Motorola**	**MC54HC139**	**1130**
	National	MM54HC139	
	RCA	**CD54HC139**	**1150**
	Signetics	54HC139	
	TI	**SN54HC139**	**714**
◆SS54HC147	**Motorola**	**MC54HC147**	**1131**
	National	MM54HC147	
	RCA	**CD54HC147**	**1150**
	Signetics	54HC147	
◆SS54HC157	**Motorola**	**MC54HC157**	**1129**
	RCA	**CD54HC157**	**1150**
	Signetics	54HC157	
	TI	**SN54HC157**	**714**
◆SS54HC161	**Motorola**	**MC54HC161**	**1127**
	National	MM54HC161	
	RCA	**CD54HC161**	**1150**
	Signetics	54HC161	
	TI	**SN54HC161**	**714**
◆SS54HC163	**Motorola**	**MC54HC163**	**1127**
	National	MM54HC163	
	RCA	**CD54HC163**	**1150**
	Signetics	54HC163	
	TI	**SN54HC163**	**714**
◆SS54HC174	**Motorola**	**MC54HC174**	**1126**
	National	MM54HC174	
	RCA	**CD54HC174**	**1149**
	Signetics	54HC174	
	TI	**SN54HC174**	**714**
◆SS54HC175	**Motorola**	**MC54HC175**	**1126**
	National	MM54HC175	
	RCA	**CD54HC175**	**1149**
	Signetics	54HC175	
	TI	**SN54HC175**	**714**
◆SS54HC192	**Motorola**	**MC54HC192**	**1127**
	National	MM54HC192	
	RCA	**CD54HC192**	**1150**
	Signetics	54HC192	
	TI	**SN54HC192**	**714**
◆SS54HC237	Motorola	MC54HC237	
	National	MM54HC237	
	RCA	**CD54HC237**	**1150**
	SSS	SN54HC237	
	TI	**SN54HC237**	**714**
SS54HC238	**RCA**	**CD54HC238**	**1150**
	Signetics	54HC238	
	TI	**SN54HC238**	**714**
SS54HC240	Mitel	MD54HC240	
	Motorola	**MC54HC240**	**1124**
	National	MM54HC240	
	RCA	**CD54HC240**	**1149**
	Signetics	54HC240	
	Supertex	SI54HC240	
	TI	**SN54HC240**	**714**

◆ Discontinued

The manufacturers report their devices can be used as direct replacements.
Performance details often differ, so compare the specifications considering your requirements.

Sprague Solid State (Cont'd)

Manufacturer Device	Replacement Source	Device	IC Master Page
SS54HC241	Mitel	MD54HC241	
	Motorola	**MC54HC241**	**1124**
	National	MM54HC241	
	RCA	**CD54HC241**	**1149**
	Signetics	54HC241	
	Supertex	SI54HC241	
	TI	**SN54HC241**	**714**
◆SS54HC242	**Motorola**	**MC54HC242**	**1124**
	National	MM54HC242	
	RCA	**CD54HC242**	**1149**
	Signetics	54HC242	
	TI	**SN54HC242**	**714**
◆SS54HC243	**Motorola**	**MC54HC243**	**1124**
	National	MM54HC243	
	RCA	**CD54HC243**	**1149**
	Signetics	54HC243	
	TI	**SN54HC243**	**714**
SS54HC244	Mitel	MD54HC244	
	Motorola	**MC54HC244**	**1124**
	National	MM54HC244	
	RCA	**CD54HC244**	**1149**
	Signetics	54HC244	
	Supertex	SI54HC244	
	Telmos	TMD54HC244	
	TI	**SN54HC244**	**714**
SS54HC245	**Motorola**	**MC54HC245**	**1124**
	National	MM54HC245	
	RCA	**CD54HC245**	**1149**
	Signetics	54HC245	
	TI	**SN54HC245**	**714**
◆SS54HC251	**Motorola**	**MC54HC251**	**1129**
	National	MM54HC251	
	RCA	**CD54HC251**	**1150**
	Signetics	54HC251	
	TI	**SN54HC251**	**714**
◆SS54HC253	**Motorola**	**MC54HC253**	**1129**
	National	MM54HC253	
	RCA	**CD54HC253**	**1150**
	Signetics	54HC253	
	TI	**SN54HC253**	**714**
◆SS54HC27	**Motorola**	**MC54HC27**	**1122**
	National	MM54HC27	
	RCA	**CD54HC27**	**1149**
	Signetics	54HC27	
	TI	**SN54HC27**	**714**
◆SS54HC273	CTI	54HC273	
	Motorola	**MC54HC273**	**1126**
	RCA	**CD54HC273**	**1149**
	Signetics	54HC273	
	TI	**SN54HC273**	**714**
◆SS54HC354	**Motorola**	**MC54HC354**	**1130**
	National	MM54HC354	
	RCA	**CD54HC354**	**1150**
	Signetics	54HC354	
◆SS54HC365	**Motorola**	**MC54HC365**	**1124**
	National	MM54HC365	
	RCA	**CD54HC365**	**1149**
	Signetics	54HC365	
SS54HC373	Mitel	MD54HC373	
	Motorola	**MC54HC373**	**1126**
	National	MM54HC373	
	RCA	**CD54HC373**	**1150**
	Signetics	54HC373	
	Supertex	SI54HC373	
	TI	**SN54HC373**	**714**
SS54HC374	Mitel	MD54HC374	
	Motorola	**MC54HC374**	**1126**
	National	MM54HC374	
	RCA	**CD54HC374**	**1149**
	Signetics	54HC374	
	Supertex	SI54HC374	
	TI	**SN54HC374**	**714**
◆SS54HC377	Motorola	MC54HC377	
	RCA	**CD54HC377**	**1149**
	Signetics	54HC377	
	TI	**SN54HC377**	**714**
SS54HC533	**Motorola**	**MC54HC533**	**1126**
	National	MM54HC533	
	RCA	**CD54HC533**	**1150**
	Signetics	54HC533	
	TI	**SN54HC533**	**714**
SS54HC534	**Motorola**	**MC54HC534**	**1127**
	National	MM54HC534	
	RCA	**CD54HC534**	**1149**
	Signetics	54HC534	
	TI	**SN54HC534**	**714**
SS54HC540	**Motorola**	**MC54HC540**	**1125**
	RCA	**CD54HC540**	**1149**
	SPI	SP54HC540	
SS54HC541	**RCA**	**CD54HC541**	**1149**
	Signetics	54HC541	
	TI	**SN54HC541**	**714**
SS54HC563	National	MM54HC563	
	RCA	**CD54HC563**	**1150**
	Signetics	54HC563	
	TI	**SN54HC563**	**714**
SS54HC564	National	MM54HC564	
	RCA	**CD54HC564**	**1149**
	Signetics	54HC564	
SS54HC573	**Motorola**	**MC54HC573**	**1126**
	National	MM54HC573	
	RCA	**CD54HC573**	**1150**
	Signetics	54HC573	
SS54HC574	**Motorola**	**MC54HC574**	**1127**
	National	MM54HC574	
	RCA	**CD54HC574**	**1149**
	Signetics	54HC574	
	TI	**SN54HC574**	**714**
SS54HC640	**Motorola**	**MC54HC640**	**1125**
	National	MM54HC640	
	RCA	**CD54HC640**	**1149**
	Signetics	54HC640	
	TI	**SN54HC640**	**714**
◆SS54HC643	**Motorola**	**MC54HC643**	**1125**
	National	MM54HC643	
	RCA	**CD54HC643**	**1149**
	Signetics	54HC643	
	TI	**SN54HC643**	**714**
SS54HC645	National	MM54HC645	
	Signetics	54HC645	
	TI	**SN54HC645**	**714**
◆SS54HC646	**Motorola**	**MC54HC646**	**1125**
	National	MM54HC646	
	RCA	**CD54HC646**	**1149**
	Signetics	54HC646	
	TI	**SN54HC646**	**714**
◆SS54HC648	**Motorola**	**MC54HC648**	**1125**
	National	MM54HC648	
	RCA	**CD54HC648**	**1149**
	Signetics	54HC648	
	TI	**SN54HC648**	**714**
◆SS54HCT00	Motorola	MC54HCT00	
	RCA	**CD54HCT00**	**1149**
	Signetics	54HCT00	
◆SS54HCT02	**RCA**	**CD54HCT02**	**1149**
	Signetics	54HCT02	
◆SS54HCT04	Motorola	MC54HCT04	
	RCA	**CD54HCT04**	**1149**
	Signetics	54HCT04	
◆SS54HCT137	CTI	54HCT137	
	RCA	**CD54HCT137**	**1150**
	Supertex	54HCT137	
	TI	**SN54HCT137**	**714**
SS54HCT138	CTI	54HCT138	
	IDT	IDT54HCT138	
	Mitel	MD54HCT138	
	Motorola	MC54HCT138	
	SPI	SP54HCT138	
	Signetics	54HCT138	
	TI	**SN54HCT138**	**714**
SS54HCT139	CTI	54HCT139	
	IDT	IDT54HCT139	
	Mitel	MD54HCT139	
	RCA	**CD54HCT139**	**1150**
	SPI	SP54HCT139	
	Signetics	54HCT139	
◆SS54HCT147	**RCA**	**CD54HCT147**	**1150**
	Signetics	54HCT147	
◆SS54HCT157	Motorola	MC54HCT157	
	RCA	**CD54HCT157**	**1150**
	Signetics	54HCT157	
◆SS54HCT161	**RCA**	**CD54HCT161**	**1150**
	Signetics	54HCT161	
◆SS54HCT163	**RCA**	**CD54HCT163**	**1150**
	Signetics	54HCT163	
◆SS54HCT174	**RCA**	**CD54HCT174**	**1149**
	Signetics	54HCT174	
◆SS54HCT175	**RCA**	**CD54HCT175**	**1149**
	Signetics	54HCT175	
◆SS54HCT192	**RCA**	**CD54HCT192**	**1150**
	Signetics	54HCT192	
◆SS54HCT237	CTI	54HCT237	
	RCA	**CD54HCT237**	**1150**
	Supertex	54HCT237	
	TI	**SN54HCT237**	**714**
SS54HCT238	CTI	54HCT238	
	RCA	**CD54HCT238**	**1150**
	Signetics	54HCT238	
	TI	**SN54HCT238**	**714**
◆SS54HCT240	CTI	54HCT240	
	Mitel	MD54HCT240	
		(Continued)	
◆SS54HCT240	Motorola	MC54HCT240	
	National	MM54HCT240	
	RCA	**CD54HCT240**	**1149**
	SPI	SP54HCT240	
	Supertex	SI54HCT240	
	TI	**SN54HCT240**	**714**
SS54HCT241	CTI	54HCT241	
	Mitel	MD54HCT241	
	Motorola	MC54HCT241	
	National	MM54HCT241	
	RCA	**CD54HCT241**	**1149**
	SPI	SP54HCT241	
	Signetics	54HCT241	
	Supertex	SI54HCT241	
	TI	**SN54HCT241**	**714**
◆SS54HCT242	**RCA**	**CD54HCT242**	**1149**
	Signetics	54HCT242	
◆SS54HCT243	RCA	CD54HCT243	
	Signetics	54HCT243	
SS54HCT244	CTI	54HCT244	
	Mitel	MD54HCT244	
	Motorola	MC54HCT244	
	National	MM54HCT244	
	RCA	**CD54HCT244**	**1149**
	SPI	SP54HCT244	
	Signetics	54HCT244	
	Supertex	SI54HCT244	
	TI	**SN54HCT244**	**714**
SS54HCT245	CTI	54HCT245	
	Mitel	MD54HCT245	
	Motorola	MC54HCT245	
	RCA	**CD54HCT245**	**1149**
	SPI	SP54HCT245	
	Signetics	54HCT245	
	TI	**SN54HCT245**	**714**
◆SS54HCT251	**RCA**	**CD54HCT251**	**1150**
	Signetics	54HCT251	
◆SS54HCT253	**RCA**	**CD54HCT253**	**1150**
	Signetics	54HCT253	
◆SS54HCT27	**RCA**	**CD54HCT27**	**1149**
	Signetics	54HCT27	
◆SS54HCT273	**RCA**	**CD54HCT273**	**1149**
	Signetics	54HCT273	
◆SS54HCT354	**RCA**	**CD54HCT354**	**1150**
	Signetics	54HCT354	
◆SS54HCT365	**RCA**	**CD54HCT365**	**1149**
	Signetics	54HCT365	
SS54HCT373	CTI	54HCT373	
	Mitel	MD54HCT343	
		MD54HCT373	
	Motorola	MC54HCT373	
	National	MM54HCT373	
	RCA	**CD54HCT373**	**1150**
	SPI	SP54HCT373	
	Signetics	54HCT373	
	Supertex	SI54HCT373	
	TI	**SN54HCT373**	**714**
SS54HCT374	CTI	54HCT374	
	Mitel	MD54HCT374	
	Motorola	MC54HCT374	
	National	MM54HCT374	
	RCA	**CD54HCT374**	**1149**
	SPI	SP54HCT374	
	Supertex	SI54HCT374	
	TI	**SN54HCT374**	**714**
◆SS54HCT377	**RCA**	**CD54HCT377**	**1149**
	Signetics	54HCT377	
SS54HCT533	CTI	54HCT533	
	Motorola	MC54HCT533	
	RCA	**CD54HCT533**	**1150**
	Signetics	54HCT533	
SS54HCT534	CTI	54HCT534	
	Motorola	MC54HCT534	
	RCA	**CD54HCT534**	**1149**
SS54HCT540	CTI	54HCT540	
	Mitel	MD54HCT540	
	Motorola	MC54HCT540	
	RCA	**CD54HCT540**	**1149**
	SPI	SP54HCT540	
	Signetics	54HCT540	
	TI	**SN54HCT540**	**714**
SS54HCT541	CTI	54HCT541	
	Mitel	MD54HCT541	
	Motorola	MC54HCT541	
	RCA	**CD54HCT541**	**1149**
	SPI	SP54HCT541	
	Signetics	54HCT541	
	TI	**SN54HCT541**	**714**
SS54HCT563	CTI	54HCT563	
	RCA	**CD54HCT563**	**1150**
	Signetics	54HCT563	
SS54HCT564	CTI	54HCT564	
	RCA	**CD54HCT564**	**1149**
	Signetics	54HCT564	
	Zytrex	ZX74HCT564-2	
SS54HCT573	CTI	54HCT573	
	Mitel	MD54HCT573	
	RCA	**CD54HCT573**	**1150**
	SPI	SP54HCT573	
	Signetics	54HCT573	
SS54HCT574	CTI	54HCT574	
	Mitel	MD54HCT574	
	RCA	**CD54HCT574**	**1149**
	SPI	SP54HCT574	
	Signetics	54HCT574	
SS54HCT640	Motorola	MC54HCT640	
	RCA	**CD54HCT640**	**1149**
	Signetics	54HCT640	
◆SS54HCT643	Motorola	MC54HCT643	
	RCA	**CD54HCT643**	**1149**
	Signetics	54HCT643	
SS54HCT645	Signetics	54HCT645	
◆SS54HCT646	**RCA**	**CD54HCT646**	**1149**
	Signetics	54HCT646	
◆SS54HCT648	**RCA**	**CD54HCT648**	**1149**
	Signetics	54HCT648	
◆SS74HC00	Hitachi	HD74HC00	
	Motorola	**MC74HC00**	**1122**
	National	MM74HC00	
	RCA	**CD74HC00**	**1149**
	SPI	SP74HC00	
	SGS	M74HC00	
	Signetics	**74HC00**	**1156**
	TI	SN74HC00	
	Toshiba	**TC40H000**	**1363**
	Universal	US74HC00	
◆SS74HC02	Hitachi	HD74HC02	
	Motorola	**MC74HC02**	**1122**
	National	MM74HC02	
	RCA	**CD74HC02**	**1149**
	SPI	SP74HC02	
	SGS	M74HC02	
	Signetics	**74HC02**	**1156**
	TI	SN74HC02	
	Toshiba	**TC40H002**	**1363**
	Universal	US74HC02	
◆SS74HC04	Hitachi	HD74HC04	
	Motorola	**MC74HC04**	**1124**
	National	MM74HC04	
	RCA	**CD74HC04**	**1149**
	SPI	SP74HC04	
	SGS	M74HC04	
	TI	SN74HC04	
	Toshiba	**TC40H004**	**1363**
	Universal	US74HC04	
◆SS74HC137	Hitachi	HD74HC137	
	Motorola	MC74HC137	
	National	MM74HC137	
	SPI	SP74HC137	
	SGS	M74HC137	
	TI	SN74HC137	
	Toshiba	**TC74HC137**	**1363**
	Universal	US74HC137	
SS74HC138	Hitachi	HD74HC138	
	Motorola	**MC74HC138**	**1130**
	National	MM74HC138	
	Nitron	NC74HC138	
	RCA	**CD74HC138**	**1150**
	SPI	SP74HC138	
	SGS	M74HC138	
	Signetics	**74HC138**	**1157**
	TI	SN74HC138	
	Universal	US74HC138	
SS74HC139	Hitachi	HD74HC139	
	Motorola	**MC74HC139**	**1130**
	National	MM74HC139	
	Nitron	NC74HC139	
	RCA	**CD74HC139**	**1150**
	SPI	SP74HC139	
	SGS	M74HC139	
	Signetics	**74HC139**	**1157**
	TI	SN74HC139	
	Toshiba	**TC40H139**	**1363**
	Universal	US74HC139	
◆SS74HC147	Hitachi	HD74HC147	
	Motorola	**MC74HC147**	**1131**
	National	MM74HC147	
	RCA	**CD74HC147**	**1150**
	SPI	SP74HC147	
	SGS	M74HC147	
	Signetics	**74HC147**	**1157**
	TI	SN74HC147	
	Universal	US74HC147	

◆ Discontinued

Bold face device numbers indicate manufacturers data is provided in the IC Master on the pages noted.

Sprague Solid State (Cont'd)

Manufacturer Device	Replacement Source	Device	IC Master Page
◆SS74HC157	Hitachi	HD74HC157	
	Motorola	**MC74HC157**	**1129**
	National	MM74HC157	
	Nitron	NC74HC157	
	RCA	**CD74HC157**	**1150**
	SPI	SP74HC157	
	SGS	M74HC157	
	Signetics	**74HC157**	**1157**
	TI	SN74HC157	
	Toshiba	**TC40H157**	**1363**
	Universal	US74HC157	
◆SS74HC161	Hitachi	HD74HC161	
	Motorola	**MC74HC161**	**1127**
	National	MM74HC161	
	RCA	**CD74HC161**	**1150**
	SPI	SP74HC161	
	SGS	M74HC161	
	Signetics	**74HC161**	**1157**
	TI	SN74HC161	
	Universal	US74HC161	
◆SS74HC163	Hitachi	HD74HC163	
	Motorola	**MC74HC163**	**1127**
	National	MM74HC163	
	RCA	**CD74HC163**	**1150**
	SPI	SP74HC163	
	SGS	M74HC163	
	Signetics	**74HC163**	**1157**
	TI	SN74HC163	
	Universal	US74HC163	
◆SS74HC174	Hitachi	HD74HC174	
	Motorola	**MC74HC174**	**1126**
	National	MM74HC174	
	Nitron	NC74HC174	
	RCA	**CD74HC174**	**1149**
	SPI	SP74HC174	
	SGS	M74HC174	
	Signetics	74HC174	
	TI	SN74HC174	
	Toshiba	**TC40H174**	**1363**
	Universal	US74HC174	
◆SS74HC175	Hitachi	HD74HC175	
	Motorola	**MC74HC175**	**1126**
	National	MM74HC175	
	Nitron	NC74HC175	
	RCA	**CD74HC175**	**1149**
	SPI	SP74HC175	
	SGS	M74HC175	
	Signetics	**74HC175**	**1157**
	TI	SN74HC175	
	Toshiba	**TC40H175**	**1363**
	Universal	US74HC175	
◆SS74HC192	Hitachi	HD74HC192	
	Motorola	**MC74HC192**	**1127**
	National	MM74HC192	
	RCA	**CD74HC192**	**1150**
	SPI	SP74HC192	
	SGS	M74HC192	
	Signetics	**74HC192**	**1157**
	TI	SN74HC192	
	Toshiba	**TC40H192**	**1363**
	Universal	US74HC192	
◆SS74HC237	Hitachi	HD74HC237	
	Motorola	MC74HC237	
	SGS	M74HC237	
	TI	SN74HC137	
		SN74HC237	
	Toshiba	**TC74HC237**	**1363**
	Universal	US74HC237	
SS74HC238	**RCA**	**CD74HC238**	**1150**
	SPI	SP74HC238	
	SGS	M74HC238	
	Signetics	**74HC238**	**1157**
	TI	SN74HC238	
SS74HC240	Hitachi	HD74HC240	
	Mitel	MD74HC240	
	Motorola	**MC74HC240**	**1124**
	National	MM74HC240	
	Nitron	NC74HC240	
	RCA	**CD74HC240**	**1149**
	SPI	SP74HC240	
	SGS	M74HC240	
	Signetics	**74HC240**	**1157**
	Supertex	SI74HC240	
	TI	SN74HC240	
	Toshiba	**TC40H240**	**1363**
	Universal	US74HC240	
	Zytrex	ZX74HC240	
SS74HC241	Hitachi	HD74HC241	
	Mitel	MD74HC241	
	Motorola	**MC74HC241**	**1124**
SS74HC241	National	MM74HC241	
	Nitron	NC74HC241	
	RCA	**CD74HC241**	**1149**
	SPI	SP74HC241	
	SGS	M74HC241	
	Signetics	**74HC241**	**1157**
	Supertex	SI74HC241	
	TI	SN74HC241	
	Universal	US74HC240	
	Zytrex	ZX74HC241	
◆SS74HC242	Hitachi	HD74HC242	
	Motorola	**MC74HC242**	**1124**
	National	MM74HC242	
	Nitron	NC74HC242	
	RCA	**CD74HC242**	**1149**
		SGN	
	SPI	SP74HC242	
	SGS	M74HC242	
	Signetics	**74HC242**	**1158**
	TI	SN74HC242	
	Universal	US74HC242	
◆SS74HC243	Hitachi	HD74HC243	
	Motorola	**MC74HC243**	**1124**
		MC74HC245	**1124**
	National	MM74HC243	
	RCA	**CD74HC243**	**1149**
	SPI	SP74HC243	
	SGS	M74HC243	
		M74HC245	
	Signetics	**74HC243**	**1158**
	TI	SN74HC243	
	Universal	US74HC243	
SS74HC244	Hitachi	HD74HC244	
	Mitel	MD74HC244	
	Motorola	**MC74HC244**	**1124**
	National	MM74HC244	
	Nitron	NC74HC244	
	RCA	**CD74HC244**	**1149**
	SPI	SP74HC244	
	SGS	M74HC244	
	Signetics	**74HC244**	**1158**
	Supertex	SI74HC244	
	TI	SN74HC244	
	Universal	US74HC244	
	Zytrex	ZX74HC244	
SS74HC245	Hitachi	HD74HC245	
	Motorola	**MC74HC245**	**1124**
	National	MM74HC245	
	Nitron	NC74HC245	
	RCA	**CD74HC245**	**1149**
	Signetics	**74HC245**	**1158**
	TI	SN74HC245	
	Universal	US74HC245	
◆SS74HC251	Hitachi	HD74HC251	
	Motorola	**MC74HC251**	**1129**
	National	MM74HC251	
	RCA	**CD74HC251**	**1150**
	SPI	SP74HC251	
	SGS	M74HC251	
	Signetics	**74HC251**	**1158**
	TI	SN74HC251	
	Universal	US74HC251	
◆SS74HC253	Hitachi	HD74HC253	
	Motorola	**MC74HC253**	**1129**
	National	MM74HC253	
	RCA	**CD74HC253**	**1150**
	SPI	SP74HC253	
	SGS	M74HC253	
	Signetics	**74HC253**	**1158**
	TI	SN74HC253	
	Universal	US74HC253	
◆SS74HC27	**Motorola**	**MC74HC27**	**1122**
	National	MM74HC27	
	RCA	**CD74HC27**	**1149**
	SPI	SP74HC27	
	SGS	M74HC27	
	Signetics	**74HC27**	**1156**
	TI	SN74HC27	
	Toshiba	**TC40H027**	**1363**
	Universal	US74HC27	
◆SS74HC273	CTI	74HC273	
	Hitachi	HD74HC273	
	Motorola	**MC74HC273**	**1126**
	Nitron	NC74HC273	
	RCA	**CD74HC273**	**1149**
	SPI	SP74HC273	
	SGS	M74HC273	
	Signetics	**74HC273**	**1158**
	TI	SN74HC273	
	Universal	US74HC273	
◆SS74HC354	Hitachi	HD74HC354	
	Motorola	**MC74HC354**	**1130**
◆SS74HC354	National	MM74HC354	
	RCA	**CD74HC354**	**1150**
	SGS	M74HC354	
	Signetics	**74HC354**	**1158**
	TI	SN74HC354	
	Universal	US74HC354	
◆SS74HC365	Hitachi	HD74HC365	
	Motorola	**MC74HC365**	**1124**
	National	MM74HC365	
	RCA	**CD74HC365**	**1149**
	SPI	SP74HC365	
	SGS	M74HC365	
	TI	SN74HC365	
	Universal	US74HC365	
SS74HC373	Hitachi	HD74HC373	
	Mitel	MD74HC373	
	Motorola	**MC74HC373**	**1126**
	National	MM74HC373	
	Nitron	NC74HC373	
	RCA	**CD74HC373**	**1150**
	SPI	SP74HC373	
	SGS	M74HC373	
	Signetics	**74HC373**	**1158**
	Supertex	SI74HC373	
	TI	SN74HC373	
	Universal	US74HC373	
	Zytrex	ZX74HC373	
SS74HC374	Hitachi	HD74HC374	
	Mitel	MD74HC374	
	Motorola	**MC74HC374**	**1126**
	National	MM74HC374	
	Nitron	NC74HC374	
	RCA	**CD74HC374**	**1149**
	SPI	SP74HC374	
	SGS	M74HC374	
	Signetics	**74HC374**	**1158**
	TI	SN74HC374	
	Universal	US74HC374	
	Zytrex	ZX74HC374	
◆SS74HC377	Hitachi	HD74HC377	
	Motorola	MC74HC377	
	RCA	**CD74HC377**	**1149**
	SGS	M74HC377	
	Signetics	**74HC377**	**1158**
	TI	SN74HC377	
	Universal	US74HC377	
SS74HC533	Hitachi	HD74HC533	
	Motorola	**MC74HC533**	**1126**
	National	MM74HC533	
	RCA	**CD74HC533**	**1150**
	SPI	SP74HC533	
	SGS	M74HC533	
	Signetics	**74HC533**	**1159**
	TI	SN74HC533	
	Universal	US74HC533	
SS74HC534	Hitachi	HD74HC534	
	Motorola	**MC74HC534**	**1127**
	National	MM74HC534	
	RCA	**CD74HC534**	**1149**
	SPI	SP74HC534	
	SGS	M74HC534	
	Signetics	**74HC534**	**1159**
	TI	SN74HC534	
	Universal	US74HC534	
SS74HC540	Hitachi	HD74HC540	
	Motorola	**MC74HC540**	**1125**
	RCA	**CD74HC540**	**1149**
	SGS	M74HC540	
	Signetics	**74HC540**	**1159**
	TI	SN74HC540	
	Toshiba	**TC74HC540**	**1363**
	Universal	US74HC540	
SS74HC541	Hitachi	HD74HC541	
	Motorola	**MC74HC541**	**1125**
	RCA	**CD74HC541**	**1149**
	SGS	M74HC541	
	Signetics	**74HC541**	**1159**
	TI	SN74HC541	
	Universal	US74HC541	
SS74HC563	Hitachi	HD74HC563	
	Motorola	**MC74HC563**	**1126**
	National	MM74HC563	
	RCA	**CD74HC563**	**1150**
	SPI	SP74HC563	
	SGS	M74HC563	
	Signetics	**74HC563**	**1159**
	TI	SN74HC563	
	Universal	US74HC563	
SS74HC564	Hitachi	HD74HC564	
	Motorola	**MC74HC564**	**1127**
	National	MM74HC564	
	RCA	**CD74HC564**	**1149**
SS74HC564	RCA	MC74HC564	
	SGS	M74HC564	
	Signetics	**74HC564**	**1159**
	TI	SN74HC564	
	Universal	US74HC564	
SS74HC573	Hitachi	HD74HC573	
	Motorola	**MC74HC573**	**1126**
	National	MM74HC573	
	RCA	**CD74HC573**	**1150**
	SPI	SP74HC573	
	SGS	M74HC573	
	Signetics	**74HC573**	**1159**
	TI	SN74HC573	
	Toshiba	**TC74HC573**	**1363**
	Universal	US74HC573	
SS74HC574	Hitachi	HD74HC574	
	Motorola	**MC74HC574**	**1127**
	National	MM74HC574	
	RCA	**CD74HC574**	**1149**
	SPI	SP74HC574	
	SGS	M74HC574	
	Signetics	**74HC574**	**1159**
	TI	SN74HC574	
	Universal	US74HC574	
SS74HC640	Hitachi	HD74HC640	
	Motorola	**MC74HC640**	**1125**
	National	MM74HC640	
	Nitron	NC74HC640	
	RCA	**CD74HC640**	**1149**
	Signetics	**74HC640**	**1159**
	TI	SN74HC640	
	Universal	US74HC640	
SS74HC643	Hitachi	HD74HC643	
	Motorola	**MC74HC643**	**1125**
	National	MM74HC643	
	RCA	**CD74HC643**	**1149**
	SGS	M74HC643	
	Signetics	**74HC643**	**1159**
	TI	SN74HC643	
	Universal	US74HC643	
SS74HC645	National	MM74HC645	
	Signetics	74HC645	
	TI	SN74HC645	
◆SS74HC646	Hitachi	HD74HC646	
	Motorola	**MC74HC646**	**1125**
	National	MM74HC646	
	Nitron	NC74HC646	
	RCA	**CD74HC646**	**1149**
	SGS	M74HC646	
	Signetics	**74HC646**	**1159**
	TI	SN74HC646	
	Universal	US74HC646	
◆SS74HC648	Hitachi	HD74HC648	
	Motorola	**MC74HC648**	**1125**
	National	MM74HC648	
	RCA	**CD74HC648**	**1149**
	SGS	M74HC648	
	Signetics	**74HC648**	**1159**
	TI	SN74HC648	
	Universal	US74HC648	
◆SS74HCT00	Motorola	MC74HCT00	
	RCA	**CD74HCT00**	**1149**
◆SS74HCT02	**RCA**	**CD74HCT02**	**1149**
	Signetics	**74HCT02**	**1156**
	Universal	US74HCT02	
◆SS74HCT04	Motorola	MC74HCT04	
	RCA	**CD74HCT04**	**1149**
	SGS	M74HCT04	
	Universal	US74HCT04	
◆SS74HCT137	CTI	74HCT137	
	MicroTech	74HCT137	
		74HCTR137	
	SGS	M74HCT137	
	Supertex	74HCT137	
	TI	SN74HCT137	
	Toshiba	**TC74HCT137**	**1363**
	Universal	US74HCT137	
SS74HCT138	CTI	74HCT138	
	IDT	IDT74HCT138	
	Mitel	MD74HCT138	
	Motorola	MC74HCT138	
	Nitron	NC74HCT138	
	Plessey	MV74HCT138	
	RCA	**CD74HCT138**	**1150**
	SPI	SP74HCT138	
	SGS	M74HCT138	
	Signetics	**74HCT138**	**1157**
	TI	SN74HCT138	
	Toshiba	**TC74HCT138**	**1363**
	Zytrex	ZX74HCT138-2	
SS74HCT139	CTI	74HCT139	
	Nitron	NC74HCT273	

(Continued)

◆ Discontinued

The manufacturers report their devices can be used as direct replacements.
Performance details often differ, so compare the specifications considering your requirements.

Sprague Solid State (Cont'd)

Manufacturer Device	Replacement Source	Device	IC Master Page
SS74HCT139	**RCA**	**CD74HCT139**	**1150**
		CD74HCT273	
	Signetics	**74HCT273**	**1158**
	Universal	US74HCT273	
◆SS74HCT147	**RCA**	**CD74HCT147**	**1150**
	Signetics	**74HCT147**	**1157**
	Universal	US74HCT147	
◆SS74HCT157	Motorola	MC74HCT157	
	Nitron	NC74HCT157	
	RCA	**CD74HCT157**	**1150**
	Signetics	**74HCT157**	**1157**
	Universal	US74HCT157	
◆SS74HCT161	**RCA**	**CD74HCT161**	**1150**
	Signetics	**74HCT161**	**1157**
	Universal	US74HCT161	
	Zytrex	ZX74HCT161-2	
◆SS74HCT163	**RCA**	**CD74HCT163**	**1150**
	Signetics	**74HCT163**	**1157**
	Universal	US74HCT163	
	Zytrex	ZX74HCT163-2	
◆SS74HCT174	Nitron	NC74HCT174	
	RCA	CD74HCT174	
	Signetics	74HCT174	
	Universal	US74HCT174	
◆SS74HCT175	Nitron	NC74HCT175	
	RCA	CD74HCT175	
	Signetics	**74HCT175**	**1157**
	Universal	US74HCT175	
◆SS74HCT192	**RCA**	**CD74HCT192**	**1150**
	Signetics	**74HCT192**	**1157**
	Universal	US74HCT192	
◆SS74HCT237	TI	SN74HCT237	
	Universal	US74HCT237	
SS74HCT238	CTI	74HCT238	
	Plessey	MV74HCT238	
	RCA	**CD74HCT238**	**1150**
	Signetics	**74HCT238**	**1157**
	TI	SN74HCT238	
SS74HCT240	CTI	74HCT240	
	Hitachi	HD74HCT240	
	Micrel	MIC74HCT240	
	MicroTech	74HCTR240	
	Mitel	MD74HCT240	
	Motorola	MC74HCT240	
	National	MM74HCT240	
	Nitron	NC74HCT240	
	Plessey	MV74HCT240	
	RCA	**CD74HCT240**	**1149**
	SPI	SP74HCT240	
	SGS	M74HCT240	
	Signetics	**74HCT240**	**1157**
	Supertex	SI74HCT240	
	TI	SN74HCT240	
	Toshiba	**TC74HCT240**	**1363**
	Universal	US74HCT240	
	Zytrex	ZX74HCT240-2	
SS74HCT241	CTI	74HCT241	
	Hitachi	HD74HCT241	
	Micrel	MIC74HCT241	
	MicroTech	74HCTR241	
	Mitel	MD74HCT241	
	Motorola	MC74HCT241	
	National	MM74HCT241	
	Nitron	NC74HCT241	
	Plessey	MV74HCT241	
	RCA	**CD74HCT241**	**1149**
	SPI	SP74HCT241	
	SGS	M74HCT241	
	Signetics	**74HCT241**	**1157**
	Supertex	SI74HCT241	
	TI	SN74HCT241	
	Toshiba	**TC74HCT241**	**1363**
	Universal	US74HCT241	
	Zytrex	ZX74HCT241-2	
◆SS74HCT242	Hitachi	HD74HCT242	
	Micrel	MIC74HCT242	
	Nitron	NC74HCT242	
	RCA	**CD74HCT242**	**1149**
	Signetics	**74HCT242**	**1158**
	TI	SN74HCT242	
	Universal	US74HCT242	
◆SS74HCT243	Hitachi	HD74HCT243	
	Micrel	MIC74HCT243	
	RCA	CD74HCT243	
	Signetics	**74HCT243**	**1158**
	TI	SN74HCT243	
	Universal	US74HCT243	
SS74HCT244	CTI	74HCT244	
	Hitachi	HD74HCT244	
	Micrel	MIC74HCT244	
	MicroTech	74HCTR244	
	Mitel	MD74HCT244	
	Motorola	MC74HCT244	
	National	MM74HCT244	
	Nitron	NC74HCT244	
	Plessey	MV74HCT244	
	RCA	**CD74HCT244**	**1149**
	SPI	SP74HCT244	
	SGS	M74HCT244	
	Signetics	**74HCT244**	**1158**
	Supertex	SI74HCT244	
	TI	SN74HCT244	
	Toshiba	**TC74HCT244**	**1363**
	Universal	US74HCT244	
	Zytrex	ZX74HCT244-2	
SS74HCT245	CTI	74HCT245	
	GTEMicro	G74SC245	
	Hitachi	HD74HCT245	
	Micrel	MIC74HCT245	
	MicroTech	74HCTR245	
	Mitel	MD74HCT245	
	Motorola	MC74HCT245	
	National	MM74HCT245	
	Plessey	MV74HCT245	
		MV74SC245	
	RCA	**CD74HCT245**	**1149**
	SPI	SP74HCT245	
	SGS	M74HCT245	
	Signetics	**74HCT245**	**1158**
	TI	SN74HCT245	
	Toshiba	**TC74HCT245**	**1363**
	Universal	US74HCT245	
◆SS74HCT251	**RCA**	**CD74HCT251**	**1150**
	Signetics	**74HCT251**	**1158**
	Universal	US74HCT251	
◆SS74HCT253	**RCA**	**CD74HCT253**	**1150**
	Signetics	**74HCT253**	**1158**
	Universal	US74HCT253	
◆SS74HCT27	**RCA**	**CD74HCT27**	**1149**
	Signetics	**74HCT27**	**1156**
	Universal	US74HCT27	
◆SS74HCT273	CTI	74HCT139	
	Nitron	NC74HCT273	
	RCA	**CD74HCT139**	**1150**
		CD74HCT273	
	Signetics	**74HCT273**	**1158**
	SSS	SS74HCT139	
	Universal	US74HCT273	
◆SS74HCT354	**RCA**	**CD74HCT354**	**1150**
	Signetics	**74HCT354**	**1158**
	Universal	US74HCT354	
◆SS74HCT365	**RCA**	**CD74HCT365**	**1149**
	Signetics	**74HCT365**	**1158**
	Universal	US74HCT365	
SS74HCT373	CTI	74HCT373	
	GTEMicro	G74SC373	
	Hitachi	HD74HCT373	
	Micrel	MIC74HCT373	
	MicroTech	74HCTR373	
	Mitel	MD74HCT373	
	Motorola	MC74HCT373	
	National	MM74HCT373	
	Nitron	NC74HCT373	
	Plessey	MV74HCT373	
		MV74SC373	
	RCA	**CD74HCT373**	**1150**
	SPI	SP74HCT373	
	SGS	M74HCT373	
	Signetics	**74HCT373**	**1158**
	Supertex	SI74HCT373	
	TI	SN74HCT373	
	Toshiba	**TC74HCT373**	**1363**
	Universal	US74HCT373	
	Zytrex	ZX74HCT373-2	
SS74HCT374	CTI	74HCT374	
	GTEMicro	G74SC374	
	Hitachi	HD74HCT374	
	Micrel	MIC74HCT374	
	MicroTech	74HCTR374	
	Mitel	MD74HCT374	
	Motorola	MC74HCT374	
	National	MM74HCT374	
	Nitron	NC74HCT374	
	Plessey	MV74HCT374	
		MV74SC374	
	RCA	CD74HCT374	
	SPI	SP74HCT374	
	SGS	M74HCT374	
	Signetics	**74HCT374**	**1158**
	Supertex	SI74HCT374	
	TI	SN74HCT374	
	Toshiba	**TC74HCT374**	**1363**
	Universal	US74HCT374	
	Zytrex	ZX74HCT374-2	
◆SS74HCT377	RCA	CD74HCT377	
	Signetics	**74HCT377**	**1158**
	Universal	US74HCT377	
SS74HCT533	CTI	74HCT533	
	Hitachi	HD74HCT533	
	Micrel	MIC74HCT533	
	MicroTech	74HCTR533	
	Motorola	MC74HCT533	
	Plessey	MV74HCT533	
	RCA	**CD74HCT533**	**1150**
	Signetics	**74HCT533**	**1159**
	TI	SN74HCT533	
	Universal	US74HCT533	
	Zytrex	ZX74HCT533	
SS74HCT534	CTI	74HCT534	
	Hitachi	HD74HCT534	
	Micrel	MIC74HCT534	
	MicroTech	74HCTR534	
	Motorola	MC74HCT534	
	Plessey	MV74HCT534	
	RCA	CD74HCT534	
	Signetics	**74HCT534**	**1159**
	TI	SN74HCT534	
	Universal	US74HCT534	
	Zytrex	ZX74HCT534-2	
SS74HCT540	CTI	74HCT540	
	Hitachi	HD74HCT540	
	Micrel	MIC74HCT540	
	MicroTech	74HCTR540	
	Mitel	MD74HCT540	
	Motorola	MC74HCT540	
	Plessey	MV74HCT540	
	RCA	**CD74HCT540**	**1149**
	SPI	SP74HCT540	
	SGS	M74HCT540	
	Signetics	**74HCT540**	**1159**
	TI	SN74HCT540	
	Toshiba	**TC74HCT540**	**1363**
	Universal	US74HCT540	
	Zytrex	ZX74HCT540-2	
SS74HCT541	CTI	74HCT541	
	Hitachi	HD74HCT541	
	Micrel	MIC74HCT541	
	MicroTech	74HCTR541	
	Mitel	MD74HCT541	
	Motorola	MC74HCT541	
	Plessey	MV74HCT541	
	RCA	**CD74HCT541**	**1149**
	SPI	SP74HCT541	
	SGS	M74HCT541	
	Signetics	**74HCT541**	**1159**
	TI	SN74HCT541	
	Toshiba	**TC74HCT541**	**1363**
	Universal	US74HCT541	
	Zytrex	ZX74HCT541-2	
SS74HCT563	CTI	74HCT563	
	Hitachi	HD74HCT563	
	Micrel	MIC74HCT563	
	MicroTech	74HCTR563	
	Motorola	MC74HCT563	
	Plessey	MV74HCT563	
	RCA	**CD74HCT563**	**1150**
	SGS	M74HCT563	
	Signetics	**74HCT563**	**1159**
	TI	SN74HCT563	
	Toshiba	**TC74HCT563**	**1363**
	Universal	US74HCT563	
SS74HCT564	CTI	74HCT564	
	Hitachi	HD74HCT564	
	Micrel	MIC74HCT564	
	MicroTech	74HCTR564	
	Motorola	MC74HCT564	
	Plessey	MV74HCT564	
		MV74HCT573	
	RCA	CD74HCT564	
	SGS	M74HCT564	
	Signetics	**74HCT564**	**1159**
	TI	SN74HCT564	
	Toshiba	**TC74HCT564**	**1363**
	Universal	US74HCT564	
SS74HCT573	CTI	74HCT573	
	Hitachi	HD74HCT573	
	Micrel	MIC74HCT573	
	MicroTech	74HCTR573	
	Mitel	MD74HCT573	
	Motorola	MC74HCT573	
	RCA	**CD74HCT573**	**1150**
	SPI	SP74HCT573	
	SGS	M74HCT573	
	Signetics	**74HCT573**	**1159**
	TI	SN74HCT573	
	Toshiba	TC74HCT573	
	Universal	US74HCT573	
SS74HCT574	CTI	74HCT574	
	Hitachi	HD74HCT574	
	MicroTech	74HCTR574	
	Mitel	MD74HCT574	
	Motorola	MC74HCT574	
	Plessey	MV74HCT574	
	RCA	CD74HCT574	
	SPI	SP74HCT574	
	SGS	M74HCT574	
	Signetics	**74HCT574**	**1159**
	TI	SN74HCT574	
	Toshiba	**TC74HCT574**	**1363**
	Universal	US74HCT574	
		US75HCT574	
SS74HCT640	Hitachi	HD74HCT640	
	MicroTech	74HCTR640	
	Motorola	MC74HCT640	
	Nitron	NC74HCT640	
	RCA	**CD74HCT640**	**1149**
	SGS	M74HCT640	
	Signetics	**74HCT640**	**1159**
	TI	SN74HCT640	
	Toshiba	**TC74HCT640**	**1363**
	Universal	US74HCT640	
	Zytrex	ZX74HCT640-2	
◆SS74HCT643	Hitachi	HD74HCT643	
	MicroTech	74HCTR643	
	Motorola	MC74HCT643	
	RCA	**CD74HCT643**	**1149**
	SGS	M74HCT643	
	Signetics	**74HCT643**	**1159**
	TI	SN74HCT643	
	Toshiba	**TC74HCT643**	**1363**
	Universal	US74HCT643	
	Zytrex	ZX74HCT643-2	
SS74HCT645	Signetics	74HCT645	
	TI	SN74HCT645	
◆SS74HCT646	Hitachi	HD74HCT646	
	Nitron	NC74HCT646	
	RCA	**CD74HCT646**	**1149**
	SGS	M74HCT646	
	Signetics	**74HCT646**	**1159**
	TI	SN74HCT646	
	Toshiba	**TC74HCT646**	**1363**
	Universal	US74HCT646	
◆SS74HCT648	Hitachi	HD74HCT648	
	RCA	**CD74HCT648**	**1149**
	SGS	M74HCT648	
	Signetics	**74HCT648**	**1159**
	TI	SN74HCT648	
	Toshiba	**TC74HCT648**	**1363**
	Universal	US74HCT648	

Standard Microsystems Corporation

Manufacturer Device	Replacement Source	Device	IC Master Page
1791	SMC	9791	
1793	SMC	9793	
9791	SMC	1791	
9793	SMC	1793	
9795	Siemens	SAB1795	
	SMC	FDC1795	
	Western	FD1795	
9797	Siemens	SAB1797	
	SMC	FDC1797	
	Western	FD1797	
COM1671	Western	UC1671	
COM2651	National	INS2651	
	Signetics	SCN2651	
COM2661	Motorola	MC2661	
		MC68661	**1657**
	Signetics	SCN2661	
COM5016	Western	BR1941	
COM7210	NEC	UPD7210	
		μPD7210	
COM8116	GI	AY5-8116	
	Western	WD1943	
COM8136	GI	AY5-8136	
CRT5027	TI	TMS9927	
CRT5037	TI	TMS9937	
CRT7220	NEC	UPD7220A	
FDC1792	Western	FD1792	
FDC1794	Western	FD1794	
FDC1795	Siemens	SAB1795	
	SMC	9795	
	Western	FD1795	
FDC1797	Siemens	SAB1797	
	SMC	9797	
	Western	FD1797	

◆ Discontinued

Bold face device numbers indicate manufacturers data is provided in the IC Master on the pages noted.

Standard Microsystems Corporation (Cont'd)

Manufacturer Device	Replacement Source	Device	IC Master Page
FDC7265	NEC	µPD7265	
FDC765A	NEC	UPD72065	
		UPD7654A-2	
	Zilog	Z765A	
FDC9229	VLSIDesign	V3829	
HDC7261	NEC	UPD7261A	
HDC9224	GouldAMI	S9224	
MPU800	National	NSC800	
MPU810	National	NSC810	
MPU830	National	NSC830	
MPU831	National	NSC831	
ROM36000	AMD	9264	
	GI	R03-9364	
	GouldAMI	S68A364	
	Hitachi	HN48364	
	Intech	IM7364	
	MicroPwr	MP2364C	
	Mitsubishi	M58334	
	Mostek	MK36000	
	Motorola	**MCM68364**	**4120**
		MCM68365	**4120**
		MCM68366	**4120**
	National	MM52164	
	NEC	UPD2364	
	Rockwell	R2364A	
	SGS	M2362	
		M36000	
	Signetics	2664	
		26S64	
	SSS	SCM23C64	
	Synertek	SY2364/A	
	TI	TMS4764	
	Toshiba	TMM2366	
ROM4732	AMD	AM9232	
	CSG	MPS2332	
	Fairchild	F3532	
	GI	R03-9332	
	GouldAMI	S2333	
		S68A332	
	GTEMicro	G2332	
	Hitachi	HN46332	
	Intech	IM7332	
	Intel	2332	
	Mitsubishi	M58333	
	Motorola	**MCM68A332**	**4120**
	National	NM52132	
	NCR	NCR2332	
	NEC	UPD2332A	
	Panasonic	MN2332	
	RCA	**CDM5333**	**1673,1677**
	Rockwell	R2332	
	SGS	M2332	
	Sharp	LH2332	
	Siemens	SA88332	
		SAB8332	
	Signetics	2332	
		2632A	
	SiliconG	SG3532	
	SSS	SCM23C32	
	Supertex	23SC32	
		CM3200	
	Synertek	SY2332	
	TI	TM2332	
		TMS2332	
		TMS4732	
	Toshiba	TMM2332	
		TMM333P	
	VTI	VT2332	
SR5015	Fairchild	3347	
	GouldAMI	S2182	
		S2183	
		S2185	

Supertex Inc.

Manufacturer Device	Replacement Source	Device	IC Master Page
23C32	Amperex	AM9233	
	CSG	MPS2333	
	Fairchild	F3533	
	GI	R03-9333	
	GouldAMI	S2333	
	NEC	UPD23328	
	RCA	**CDM5332**	**1673,1677,1678**
	Signetics	2332	
	SSS	SCM23C33	
	Synertek	SY2333	
	Toshiba	TMM2332	
	Universal	UM2333	
23SC32	AMD	AM9232	
	CSG	MPS2332	
	Fairchild	F3532	
	GI	R03-9332	
	GouldAMI	S2333	
		S68A332	
	GTEMicro	G2332	
	Hitachi	HN46332	
	Intech	IM7332	
	Intel	2332	
	Mitsubishi	M58333	
	Motorola	**MCM68A332**	**4120**
	National	NM52132	
	NCR	NCR2332	
	NEC	UPD2332A	
	Panasonic	MN2332	
	RCA	**CDM5333**	**1673.1677**
	Rockwell	R2332	
	SGS	M2332	
	Sharp	LH2332	
	Siemens	SA88332	
		SAB8332	
	Signetics	2332	
		2632A	
	SiliconG	SG3532	
	SSS	SCM23C32	
	SMC	ROM4732	
	Supertex	CM3200	
	Synertek	SY2332	
	TI	TM2332	
		TMS2332	
		TMS4732	
	Toshiba	TMM2332	
		TMM333P	
	VTI	VT2332	
23SC64	AMD	AM9265	
	Fairchild	F3568	
		F3569	
		F3570	
	GI	R03-9365	
		R09864	
	GouldAMI	S2364	
		S6364	
	GTEMicro	G5364	
	Hitachi	HN61364	
	Intel	2364A	
	Mitsubishi	M5M2364	
		M5M2365	
		M5M23C64	
	Mostek	MK37000	
	Motorola	MCM68369	
		MCM68370	
	National	MM52264	
		NM52264	
	OKI	**MSM3864**	**4733**
	Panasonic	MN2364	
		MN4864	
	RCA	**CDM5365**	**1673.1677**
	Rockwell	R2364B	
	SSS	SCM23C65	
	Supertex	23SC64/A	
		CM6400	
	Synertek	SY2365/A	
	TI	TMS2364	
		TMS4764	
	Toshiba	TMM2365	
	UMC	UM2366	
	VTI	VT2365	
23SC64/A	AMD	AM9265	
	Fairchild	F3568	
		F3569	
		F3570	
	GI	R03-9365	
		R09864	
	GouldAMI	S2364	
		S6364	
	GTEMicro	G5364	
	Hitachi	HN61364	
	Intel	2364A	
	Mitsubishi	M5M2364	
		M5M2365	
		M5M23C64	
	Mostek	MK37000	
	Motorola	MCM68369	
		MCM68370	
	National	MM52264	
		NM52264	
	OKI	**MSM3864**	**4733**
	Panasonic	MN2364	
		MN4864	
23SC64/A	**RCA**	**CDM5365**	**1673,1677**
	Rockwell	R2364B	
	SSS	SCM23C65	
	Supertex	23SC64	
		CM6400	
	Synertek	SY2365/A	
	TI	TMS2364	
		TMS4764	
	Toshiba	TMM2365	
	UMC	UM2366	
	VTI	VT2365	
54HCT137	CTI	54HCT137	
	RCA	**CD54HCT137**	**1150**
	TI	**SN54HCT137**	**714**
54HCT237	CTI	54HCT237	
	RCA	**CD54HCT237**	**1150**
	TI	**SN54HCT237**	**714**
74HCT137	CTI	74HCT137	
	MicroTech	74HCT137	
		74HCTR137	
	SGS	M74HCT137	
	TI	SN74HCT137	
	Toshiba	**TC74HCT137**	**1363**
	Universal	US74HCT137	
74HCT237	Plessey	MV74HCT237	
	Universal	US74HCT237	
CM1310	AMD	AM92128	
	GI	R09128	
		SPR-128	
	GouldAMI	S23128	
		S3630A	
	GTEMicro	G53128	
	Hitachi	HN613128	
		HN613128P	
	Mitsubishi	M5M23128	
	Motorola	MCM63128	
	NCR	NCR23128	
	NEC	UPD23128	
		UPD23128A	
		UPD23128E	
		UPD23C128	
		UPD23C128E	
	RCA	**CDM53128**	**1673,1677**
	Rockwell	R23128	
	Signetics	23128	
	SSS	SCM23C128	
	Synertek	SY23128	
	Toshiba	TMM23128	
	UMC	UM23128	
	VTI	23131	
		VT23128	
		VT23129	
		VT23129A	
		VT23130	
		VT23138	
CM2560	AMD	AM92256	
	Fujitsu	MB83256	
	GI	R09256	
	GouldAMI	S23256	
		S38256	
	GTEMicro	G53256	
	Hitachi	HN613256	
	Mitsubishi	M5M23256	
	Mostek	MK38000	
	Motorola	MCM63256	
		MCM65256	
	NCR	NCR23256	
		NCR23257	
	NEC	UPD23256	
		UPD23256A	
		UPD23C256E	
	OKI	**MSM38256**	**4733**
	Panasonic	MN23256	
		MN23257	
	RCA	CDM52356	
		CDM53256	**1673,1678**
	S-MOS	**SMM2326**	**4178**
		SMM6325	**4178**
		SMM6326	**4178**
	Signetics	23256	
		23256A	
	SSS	SCM23C256	
	Toshiba	**TMM23256**	**4263**
	UMC	UM23256	
	VTI	23257	
		VT23256	
		VT23257	
CM3200	AMD	AM9232	
	CSG	MPS2332	
CM3200	Fairchild	F3532	
	GI	R03-9332	
	GouldAMI	S2333	
		S68A332	
	GTEMicro	G2332	
	Hitachi	HN46332	
	Intech	IM7332	
	Intel	2332	
	Mitsubishi	M58333	
	Motorola	**MCM68A332**	**4120**
	National	NM52132	
	NCR	NCR2332	
	NEC	UPD2332A	
	Panasonic	MN2332	
	RCA	**CDM5333**	**1673,1677**
	Rockwell	R2332	
	SGS	M2332	
	Sharp	LH2332	
	Siemens	SA88332	
		SAB8332	
	Signetics	2332	
		2632A	
	SiliconG	SG3532	
	SSS	SCM23C32	
	SMC	ROM4732	
	Supertex	23SC32	
	Synertek	SY2332	
	TI	TM2332	
		TMS2332	
		TMS4732	
	Toshiba	TMM2332	
		TMM333P	
	VTI	VT2332	
CM6400	AMD	AM9265	
	Fairchild	F3568	
		F3569	
		F3570	
	GI	R03-9365	
		R09864	
	GouldAMI	S2364	
		S6364	
	GTEMicro	G5364	
	Hitachi	HN61364	
	Intel	2364A	
	Mitsubishi	M5M2364	
		M5M2365	
		M5M23C64	
	Mostek	MK37000	
	Motorola	MCM68369	
		MCM68370	
	National	MM52264	
		NM52264	
	OKI	**MSM3864**	**4733**
	Panasonic	MN2364	
		MN4864	
	RCA	**CDM5365**	**1673,1677**
	Rockwell	R2364B	
	SSS	SCM23C65	
	Supertex	23SC64	
		23SC64/A	
	Synertek	SY2365/A	
	TI	TMS2364	
		TMS4764	
	Toshiba	TMM2365	
	UMC	UM2366	
	VTI	VT2365	
SI54HC240	Mitel	MD54HC240	
	Motorola	**MC54HC240**	**1124**
	National	MM54HC240	
	RCA	**CD54HC240**	**1149**
	Signetics	54HC240	
	SSS	SS54HC240	
	TI	**SN54HC240**	**714**
SI54HC241	Mitel	MD54HC241	
	Motorola	**MC54HC241**	**1124**
	National	MM54HC241	
	RCA	**CD54HC241**	**1149**
	Signetics	54HC241	
	SSS	SS54HC241	
	TI	**SN54HC241**	**714**
SI54HC244	Mitel	MD54HC244	
	Motorola	**MC54HC244**	**1124**
	National	MM54HC244	
	RCA	**CD54HC244**	**1149**
	Signetics	54HC244	
	SSS	SS54HC244	
	Telmos	TMD54HC244	
	TI	**SN54HC244**	**714**
SI54HC373	Mitel	MD54HC373	
	Motorola	**MC54HC373**	**1126**

(Continued)

◆ Discontinued

The manufacturers report their devices can be used as direct replacements.
Performance details often differ, so compare the specifications considering your requirements.

Supertex Inc. (Cont'd)

Manufacturer Device	Replacement Source	Device	IC Master Page
SI54HC373	National	MM54HC373	
	RCA	**CD54HC373**	**1150**
	Signetics	54HC373	
	SSS	SS54HC373	
	TI	**SN54HC373**	**714**
SI54HC374	Mitel	MD54HC374	
	Motorola	**MC54HC374**	**1126**
	National	MM54HC374	
	RCA	**CD54HC374**	**1149**
	Signetics	54HC374	
	SSS	SS54HC374	
	TI	**SN54HC374**	**714**
SI54HCT240	CTI	54HCT240	
	Mitel	MD54HCT240	
	Motorola	MC54HCT240	
	National	MM54HCT240	
	RCA	**CD54HCT240**	**1149**
	SPI	SP54HCT240	
	TI	**SN54HCT240**	**714**
SI54HCT241	CTI	54HCT241	
	Mitel	MD54HCT241	
	Motorola	MC54HCT241	
	National	MM54HCT241	
	RCA	**CD54HCT241**	**1149**
	SPI	SP54HCT241	
	Signetics	54HCT241	
	SSS	SS54HCT241	
	TI	**SN54HCT241**	**714**
SI54HCT244	CTI	54HCT244	
	Mitel	MD54HCT244	
	Motorola	MC54HCT244	
	National	MM54HCT244	
	RCA	**CD54HCT244**	**1149**
	SPI	SP54HCT244	
	Signetics	54HCT244	
	SSS	SS54HCT244	
	TI	**SN54HCT244**	**714**
SI54HCT373	CTI	54HCT373	
	Mitel	MD54HCT343	
		MD54HCT373	
	Motorola	MC54HCT373	
	National	MM54HCT373	
	RCA	**CD54HCT373**	**1150**
	SPI	SP54HCT373	
	Signetics	54HCT373	
	SSS	SS54HCT373	
	TI	**SN54HCT373**	**714**
SI54HCT374	CTI	54HCT374	
	Mitel	MD54HCT374	
	Motorola	MC54HCT374	
	National	MM54HCT374	
	RCA	**CD54HCT374**	**1149**
	SPI	SP54HCT374	
	SSS	SS54HCT374	
	TI	**SN54HCT374**	**714**
SI74HC240	Hitachi	HD74HC240	
	Mitel	MD74HC240	
	Motorola	**MC74HC240**	**1124**
	National	MM74HC240	
	Nitron	NC74HC240	
	RCA	**CD74HC240**	**1149**
	SPI	SP74HC240	
	SGS	M74HC240	
	Signetics	**74HC240**	**1157**
	SSS	SS74HC240	
	TI	SN74HC240	
	Toshiba	**TC40H240**	**1363**
	Universal	US74HC240	
	Zytrex	ZX74HC240	
SI74HC241	Hitachi	HD74HC241	
	Mitel	MD74HC241	
	Motorola	**MC74HC241**	**1124**
	National	MM74HC241	
	Nitron	NC74HC241	
	RCA	**CD74HC241**	**1149**
	SPI	SP74HC241	
	SGS	M74HC241	
	Signetics	**74HC241**	**1157**
	SSS	SS74HC241	
	TI	SN74HC241	
	Universal	US74HC240	
	Zytrex	ZX74HC241	
SI74HC244	Hitachi	HD74HC244	
	Mitel	MD74HC244	
	Motorola	**MC74HC244**	**1124**
	National	MM74HC244	
	Nitron	NC74HC244	
	RCA	**CD74HC244**	**1149**
	SPI	SP74HC244	
	SGS	M74HC244	
SI74HC244	**Signetics**	**74HC244**	**1158**
	SSS	SS74HC244	
	TI	SN74HC244	
	Universal	US74HC244	
	Zytrex	ZX74HC244	
SI74HC373	Hitachi	HD74HC373	
	Mitel	MD74HC373	
	Motorola	**MC74HC373**	**1126**
	National	MM74HC373	
	Nitron	NC74HC373	
	RCA	**CD74HC373**	**1150**
	SPI	SP74HC373	
	SGS	M74HC373	
	Signetics	**74HC373**	**1158**
	SSS	SS74HC373	
	TI	SN74HC373	
	Universal	US74HC373	
	Zytrex	ZX74HC373	
SI74HCT240	CTI	74HCT240	
	Hitachi	HD74HCT240	
	Micrel	MIC74HCT240	
	MicroTech	74HCTR240	
	Mitel	MD74HCT240	
	Motorola	MC74HCT240	
	National	MM74HCT240	
	Nitron	NC74HCT240	
	Plessey	MV74HCT240	
	RCA	**CD74HCT240**	**1149**
	SPI	SP74HCT240	
	SGS	M74HCT240	
	Signetics	**74HCT240**	**1157**
	SSS	SS74HCT240	
	TI	SN74HCT240	
	Toshiba	**TC74HCT240**	**1363**
	Universal	US74HCT240	
	Zytrex	ZX74HCT240-2	
SI74HCT241	CTI	74HCT241	
	Hitachi	HD74HCT241	
	Micrel	MIC74HCT241	
	MicroTech	74HCTR241	
	Mitel	MD74HCT241	
	Motorola	MC74HCT241	
	National	MM74HCT241	
	Nitron	NC74HCT241	
	Plessey	MV74HCT241	
	RCA	**CD74HCT241**	**1149**
	SPI	SP74HCT241	
	SGS	M74HCT241	
	Signetics	**74HCT241**	**1157**
	SSS	SS74HCT241	
	TI	SN74HCT241	
	Toshiba	**TC74HCT241**	**1363**
	Universal	US74HCT241	
	Zytrex	ZX74HCT241-2	
SI74HCT244	CTI	74HCT244	
	Hitachi	HD74HCT244	
	Micrel	MIC74HCT244	
	MicroTech	74HCTR244	
	Mitel	MD74HCT244	
	Motorola	MC74HCT244	
	National	MM74HCT244	
	Nitron	NC74HCT244	
	Plessey	MV74HCT244	
	RCA	**CD74HCT244**	**1149**
	SPI	SP74HCT244	
	SGS	M74HCT244	
	Signetics	**74HCT244**	**1158**
	SSS	SS74HCT244	
	TI	SN74HCT244	
	Toshiba	**TC74HCT244**	**1363**
	Universal	US74HCT244	
	Zytrex	ZX74HCT244-2	
SI74HCT373	CTI	74HCT373	
	GTEMicro	G74SC373	
	Hitachi	HD74HCT373	
	Micrel	MIC74HCT373	
	MicroTech	74HCTR373	
	Mitel	MD74HCT373	
	Motorola	MC74HCT373	
	National	MM74HCT373	
	Nitron	NC74HCT373	
	Plessey	MV74HCT373	
		MV74SC373	
	RCA	**CD74HCT373**	**1150**
	SPI	SP74HCT373	
	SGS	M74HCT373	
	Signetics	**74HCT373**	**1158**
	SSS	SS74HCT373	
	TI	SN74HCT373	
	Toshiba	**TC74HCT373**	**1363**
	Universal	US74HCT373	
	Zytrex	ZX74HCT373-2	
SI74HCT374	CTI	74HCT374	
	GTEMicro	G74SC374	
	Hitachi	HD74HCT374	
	Micrel	MIC74HCT374	
	MicroTech	74HCTR374	
	Mitel	MD74HCT374	
	Motorola	MC74HCT374	
	National	MM74HCT374	
	Nitron	NC74HCT374	
	Plessey	MV74HCT374	
		MV74SC374	
	RCA	CD74HCT374	
	SPI	SP74HCT374	
	SGS	M74HCT374	
	Signetics	**74HCT374**	**1158**
	SSS	SS74HCT374	
	TI	SN74HCT374	
	Toshiba	**TC74HCT374**	**1363**
	Universal	US74HCT374	
	Zytrex	ZX74HCT374-2	

(Continued)

Synertek

Manufacturer Device	Replacement Source	Device	IC Master Page
◆SY1402	Micrel	MIC1402	
SY2101	GouldAMI	S5101	
		S6501	
	Harris	MH6501	
	Hitachi	HM435101	
	Intel	5101	
	Motorola	MCM5101	
		MCMS1L01	
	National	MM74C920	
	Panasonic	MNS101	
	RCA	**MWS5101**	**1673,1676**
	Sharp	LH5101	
	SSS	SCM5101	
	Toshiba	TC5501	
◆SY2114	AMD	AM9114	
	Fairchild	F2114	
	Hitachi	HM472114	
	Intel	2114	
		2114A	
	Mitsubishi	M5L2114	
	Motorola	M5L2114	
		MCM2114	
		MCM21L14	
	National	NMC2114A	
	OKI	MSM2114	
	SSS	SCM2114A	
		SCM21C14	
	Toshiba	TMM2114A	
		TMM314A	
	UMC	UM2114	
◆SY2128	AMD	AM9128	
		AM9218	
	Cypress	CY7C128	
	Fujitsu	MB8128	
		MB8416	
	Harris	HM6116	
		HM6516	
	IDT	IDT6116	
	Intel	2128	
	MicroPwr	MP6116	
	Mitsubishi	M58275	
		M5M116	
		M5M5116	
		M5M5117	
		M5M5118	
		MS8725	
	Motorola	MCM2016	
		MCM2016H	
		MCM2128	
		MCM6116	**4119**
		MCM61L16	**4119**
		MCM65116	
	National	MMC2116	
	NEC	µPD4016	
	OKI	MSM2128	
		MSM5128	**4732,4733**
	RCA	MWS6116A	
	SSS	883C21C16	
		BCM21C16	
		SCM21C16	
		SCM6116	
	TI	TMS4016	
	ThomsonCSF	ET2128	
	Toshiba	**TC5516A**	**4263**
		TMM2015A	
		TMM2016	
		TMM2016A	**4263**
◆SY2128	Samsung	KM6816	
	UMC	UM2128	
	Universal	US574HC133	
◆SY2129	AMD	AM9128	
		AM9218	
	Cypress	CY7C128	
	Fujitsu	MB8128	
		MB8416	
	Harris	HM6116	
		HM6516	
	IDT	IDT6116	
	Intel	2128	
	MicroPwr	MP6116	
	Mitsubishi	M58275	
		M5M116	
		M5M5116	
		M5M5117	
		M5M5118	
		MS8725	
	Motorola	MCM2016	
		MCM2016H	
		MCM2128	
		MCM6116	**4119**
		MCM61L16	**4119**
		MCM65116	
	National	MMC2116	
	NEC	µPD4016	
	OKI	MSM2128	
		MSM5128	**4732,4733**
	RCA	MWS6116A	
	SSS	883C21C16	
		BCM21C16	
		SCM21C16	
		SCM6116	
	TI	TMS4016	
	ThomsonCSF	ET2128	
	Toshiba	**TC5516A**	**4263**
		TMM2015A	
		TMM2016	
		TMM2016A	**4263**
	Samsung	KM6816	
	UMC	UM2128	
	Universal	US574HC133	
◆SY2130	AMD	AM2130	
◆SY2142	National	MM2142	
◆SY2142-2	National	NMC2142A	
◆SY2148	AMD	AM2148	
		AM2149	
	Cypress	CY2148	
		CY2149	
		CY7C148	
		CY7C149	
	Intel	2148H	
		2149H	
	National	NMC2148	
	NEC	UPD2149	
	ThomsonCSF	ET2148	
	UMC	UM2148	
		UM2149	
◆SY2149	AMD	AM2148	
		AM2149	
	Cypress	CY2148	
		CY2149	
		CY7C148	
		CY7C149	
	Intel	2148H	
		2149H	
	National	NMC2148	
	NEC	UPD2149	
	ThomsonCSF	ET2148	
	UMC	UM2148	
		UM2149	
◆SY2150	**TI**	**TMS2150**	**1323**
◆SY2169	AMD	AM2168	
		AM99C68	
	Cypress	CY7C168	
	Fujitsu	MB8168	
	Hitachi	HM6168	
	Inmos	IMS1420	
		IMS1421	
		IMS1423	
	IDT	IDT6168	
	Mitsubishi	M5M2168	
	Motorola	MCM6168	
	TI	TMS2168	
◆SY23128	AMD	AM92128	
	GI	R09128	
		SPR-128	
	GouldAMI	S23128	
		S3630A	
	GTEMicro	G53128	

(Continued)

(Continued)

◆ Discontinued

Bold face device numbers indicate manufacturers data is provided in the IC Master on the pages noted.

Synertek (Cont'd)

Manufacturer Device	Replacement Source	Device	IC Master Page
◆SY23128	Hitachi	HN613128	
		HN613128P	
	Mitsubishi	M5M23128	
	Motorola	MCM63128	
	NCR	NCR23128	
	NEC	UPD23128	
		UPD23128A	
		UPD23128E	
		UPD23C128	
		UPD23C128E	
	RCA	**CDM53128**	**1673,1677**
	Rockwell	R23128	
	Signetics	23128	
	SSS	SCM23C128	
	Supertex	CM1310	
	Toshiba	TMM23128	
	UMC	UM23128	
	VTI	23131	
		VT23128	
		VT23129	
		VT23129A	
		VT23130	
		VT23138	
◆SY2316A	Micrel	MIC2316A	
◆SY2332	AMD	AM9232	
	CSG	MPS2332	
	Fairchild	F3532	
	GI	R03-9332	
	GouldAMI	S2333	
		S68A332	
	GTEMicro	G2332	
	Hitachi	HN46332	
	Intech	IM7332	
	Intel	2332	
	Mitsubishi	M58333	
	Motorola	**MCM68A332**	**4120**
	National	NM52132	
	NCR	NCR2332	
	NEC	UPD2332A	
	Panasonic	MN2332	
	RCA	**CDM5333**	**1673,1677**
	Rockwell	R2332	
	SGS	M2332	
	Sharp	LH2332	
	Siemens	SA88332	
		SAB8332	
	Signetics	2332	
		2632A	
	SiliconG	SG3532	
	SSS	SCM23C32	
	SMC	ROM4732	
	Supertex	23SC32	
		CM3200	
	TI	TM2332	
		TMS2332	
		TMS4732	
	Toshiba	TMM2332	
		TMM333P	
	VTI	VT2332	
◆SY2333	Amperex	AM9233	
	CSG	MPS2333	
	Fairchild	F3533	
	GI	R03-9333	
	GouldAMI	S2333	
	NEC	UPD23328	
	RCA	**CDM5332**	**1673,1677,1678**
	Signetics	2332	
	SSS	SCM23C33	
	Supertex	23C32	
	Toshiba	TMM2332	
	Universal	UM2333	
◆SY2333-3	Amperex	AM9233	
	CSG	MPS2333	
	Fairchild	F3533	
	GI	R03-9333	
	GouldAMI	S2333	
	NEC	UPD23328	
	RCA	**CDM5332**	**1673,1677,1678**
	Signetics	2332	
	SSS	SCM23C33	
	Supertex	23C32	
	Synertek	SY2333	
	Toshiba	TMM2332	
	Universal	UM2333	
◆SY2364/A	AMD	9264	
	GI	R03-9364	
◆SY2364/A	GouldAMI	S68A364	
	Hitachi	HN48364	
	Intech	IM7364	
	MicroPwr	MP2364C	
	Mitsubishi	M58334	
	Mostek	MK36000	
	Motorola	**MCM68364**	**4120**
		MCM68365	**4120**
		MCM68366	**4120**
	National	MM52164	
	NEC	UPD2364	
	Rockwell	R2364A	
	SGS	M2362	
		M36000	
	Signetics	2664	
		26S64	
	SSS	SCM23C64	
	SMC	ROM36000	
	TI	TMS4764	
	Toshiba	TMM2366	
◆SY2364B	AMD	9264	
	GI	R03-9364	
	GouldAMI	S68A364	
	Hitachi	HN48364	
	Intech	IM7364	
	MicroPwr	MP2364C	
	Mitsubishi	M58334	
	Mostek	MK36000	
	Motorola	**MCM68364**	**4120**
		MCM68365	**4120**
		MCM68366	**4120**
	National	MM52164	
	NEC	UPD2364	
	Rockwell	R2364A	
	SGS	M2362	
		M36000	
	Signetics	2664	
		26S64	
	SSS	SCM23C64	
	SMC	ROM36000	
	Synertek	SY2364/A	
	TI	TMS4764	
	Toshiba	TMM2366	
◆SY2365	AMD	AM9265	
	Fairchild	F3568	
		F3569	
		F3570	
	GI	R03-9365	
		R09864	
	GouldAMI	S2364	
		S6364	
	GTEMicro	G5364	
	Hitachi	HN61364	
	Intel	2364A	
	Mitsubishi	M5M2364	
		M5M2365	
		M5M23C64	
	Mostek	MK37000	
	Motorola	MCM68369	
		MCM68370	
	National	MM52264	
		NM52264	
	OKI	**MSM3864**	**4733**
	Panasonic	MN2364	
		MN4864	
	RCA	**CDM5365**	**1673,1677**
	Rockwell	R2364B	
	SSS	SCM23C65	
	Supertex	23SC64	
		23SC64/A	
		CM6400	
	Synertek	SY2365/A	
	TI	TMS2364	
		TMS4764	
	Toshiba	TMM2365	
	UMC	UM2366	
	VTI	VT2365	
◆SY2365/A	AMD	AM9265	
	Fairchild	F3568	
		F3569	
		F3570	
	GI	R03-9365	
		R09864	
	GouldAMI	S2364	
		S6364	
	GTEMicro	G5364	
	Hitachi	HN61364	
	Intel	2364A	
	Mitsubishi	M5M2364	
		M5M2365	
		M5M23C64	
◆SY2365/A	Mostek	MK37000	
	Motorola	MCM68369	
		MCM68370	
	National	MM52264	
		NM52264	
	OKI	**MSM3864**	**4733**
	Panasonic	MN2364	
		MN4864	
	RCA	**CDM5365**	**1673,1677**
	Rockwell	R2364B	
	SSS	SCM23C65	
	Supertex	23SC64	
		23SC64/A	
		CM6400	
	TI	TMS2364	
		TMS4764	
	Toshiba	TMM2365	
	UMC	UM2366	
	VTI	VT2365	
◆SY2401	AMD	AM2401	
◆SY2533	Micrel	MIC2533	
◆SY2534	Micrel	MIC2534	
◆SY2535	Micrel	MIC2535	
◆SY2661	Motorola	MC2661	
		MC68661	**1657**
	Signetics	SCN2661	
	SMC	COM2661	
◆SY2827	Micrel	MIC2827	
◆SY5606	Rockwell	R6506	
◆SY6502	Rockwell	R6502	
◆SY6503	Rockwell	R6503	
◆SY6504	GouldAMI	6504	
	Harris	HM6504	
	Hitachi	4315	
		6147	
	Mitsubishi	58981	
	Motorola	6504	
	National	NMC6504	
	OKI	5104	
	RCA	CDM5104	
	Rockwell	R6504	
	Toshiba	TC5504	
◆SY6505	Rockwell	R6505	
◆SY6507	Rockwell	R6507	
◆SY6512	Rockwell	R6512	
◆SY6513	Rockwell	R6513	
◆SY6514	Harris	HM6514	
	Hitachi	6148	
		HM4334	
	Mitsubishi	58981	
	Motorola	6514	
	NEC	444	
	OKI	5114	
	RCA	MWS5514	
	Rockwell	R6514	
	Toshiba	TC5514	
◆SY6522	Rockwell	R6522	
◆SY6530	Rockwell	R6530	
◆SY6532	Rockwell	R6532	
◆SY6545-1	Rockwell	R6545-1	
◆SY6551	GouldAMI	S6551	
	National	6551	
	RCA	1822	
	Rockwell	R6551	
	Toshiba	5101	
◆SY65C02	**GTEMicro**	**G65SC02**	**1615**
	Rockwell	R65C02	
◆SY66016	AMD	AM29516	
		AM29C516	
	AD	ADSP1016	
	Cypress	CY7C516	
	IDT	**IDT7216**	**1086,1088**
	LogicDev	LMU16	
	TRW-LSI	MPY016H	
		MPY016K	
		MPY16HJ	
	Weitek	WTL1016	
		WTL1516	
		WTL2516	
◆SY66C016	AMD	AM29516	
		AM29C516	
	AD	ADSP1016	
	Cypress	CY7C516	
	IDT	**IDT7216**	**1086,1088**
	LogicDev	LMU16	
	TRW-LSI	MPY016H	
		MPY016K	
		MPY16HJ	
	Weitek	WTL1016	
		WTL1516	
		WTL2516	
◆SY6845E	Hitachi	HD68B45	
	Synertek	SY6845R	
◆SYG515	Rockwell	R6515	
◆SYM2364	AMD	AM9264	
	GouldAMI	S2364	
		S68A364	
	Hitachi	HN48364	
	Motorola	**MCM68364**	**4120**
	NCR	NCR2364	
	OKI	**MSM3864**	**4733**
	Plessey	SL2364C	
	S-MOS	**SMM2364**	**4178**
	Sharp	LH2364A	
	Signetics	2364	
	TI	TMS2364	
		TMS4764	
	Toshiba	TMM2364	
	VTI	VT2364	
	Weitek	SC8164	
◆Z8601	SGS	Z8601	
	Sharp	Z8601	
	Zilog	Z8601	
◆Z8612	SGS	Z8612	
	Zilog	Z8612	
◆Z8613	Zilog	Z8613	
◆Z8671	SGS	Z8671	
	Zilog	Z8671	
◆Z8681	SGS	Z8681	
	Sharp	Z8681	
	Zilog	Z8681	

Teledyne Crystalonics

Manufacturer Device	Replacement Source	Device	IC Master Page
CDR125	Intersil	D125	
	Siliconix	D125	
LH0002	Elantec	EL2002	
		EL2003	**3537,3539**
		ELH0002	**3537**
	LinearTech	LT1010	
	Micra	MC0002	
		MC0021	
	National	LH0002	
	OEI	9910	
LH0032	**Elantec**	**EL2006**	**3537,3542**
		ELH0032	**3537**
	Harris	HA2541	
	Micra	MC0032	
	National	LH0032	
	TeledyneP	0032	
LH0033	**Elantec**	**EL2004**	**3537,3540**
		EL2005	**3537,3541**
		ELH0033	**3537**
	Harris	HA-5033	
	Maxim	LH0033	
	Micra	MC0033	
	National	LH0033	
	TeledyneP	1359	
TSC7117	**Intersil**	**ICL7117**	**3198**
	Maxim	ICL7117	
		ICL7126	
	TeledyneS	TSC7117	
TSC7650	**Datel**	**AM-7650**	**3158,3163**
	Intersil	ICL7650	
	LinearTech	LTC1052	
		LTC7652	
	Maxim	ICL7650	
	Siliconix	**SI7135**	**3248,3254**
TSC7660	Datel	VI-7660	
	Intersil	**ICL7660**	**3603**
	LinearTech	LTC1044	
	Maxim	ICL7660	
	Siliconix	SI7660	

Teledyne Philbrick

Manufacturer Device	Replacement Source	Device	IC Master Page
0032	**Elantec**	**EL2006**	**3537,3542**
		ELH0032	**3537**
	Harris	HA2541	
	Micra	MC0032	
	National	LH0032	
	TeledyneC	LH0032	
1319-01	AD	AD504	
1322	AD	AD509	
	Burr-Brown	3507	
	Harris	HA2520	
1323	Datel	AM-470-2	
		AM-470-2C	
		AM-470-2M	
1326	**Elantec**	**EHA2600**	**3538**
	Fairchild	μA741	
	Harris	HA-2600	

(Continued)

◆ Discontinued

The manufacturers report their devices can be used as direct replacements.
Performance details often differ, so compare the specifications considering your requirements.

Teledyne Philbrick (Cont'd)

Manufacturer Device	Replacement Source	Device	IC Master Page
1326	**Motorola**	**MC1556**	**3616**
	TI	MC1556	
1332	Datel	AM-464-2	
	Harris	HA-2645	
		LM343	
	Motorola	**MC1436**	**3616**
		MC1439	**3615**
	National	LM1436	
		LM343	
	SiliconG	SG1436	
		SG343	
1341	Harris	HA-2540	
1342	Harris	HA-2539	
	Signetics	**NE5539**	**3710,3729**
1343	Harris	HA-5195	
1344	Harris	HA-5160	
1345	Harris	HA-5162	
1346	Harris	HA-5180	
1347	Harris	HA-5180A	
1359	**Elantec**	**EL2004**	**3537,3540**
		EL2005	**3537,3541**
		ELH0033	**3537**
	Harris	HA-5033	
	Maxim	LH0033	
	Micra	MC0033	
	National	LH0033	
	TeledyneC	LH0033	
1424	AD	AD506	
		AD542	
	Burr-Brown	0PA506	
	National	LH0022	
		LH740A	
		LM0052	
	TeledyneP	1425	
1425	AD	AD506	
		AD542	
	Burr-Brown	0PA506	
	National	LH0022	
		LH740A	
		LM0052	
	TeledyneP	1424	
1430	**Datel**	**AM-500**	**3160,3163**
1437	HyComp	HC1437	
1480	**Burr-Brown**	**3583**	**3149**
3554	**Burr-Brown**	**3554**	**3150**
4140	**Datel**	**ADC-EK8B**	**3161**
	TeledyneS	8700	
4141	**Datel**	**ADC-EK10B**	**3161**
	TeledyneS	8701	
4142	**Datel**	**ADC-EK12B**	**3161**
	TeledyneS	8702	
4143	Datel	ADC-ET8B	
	TeledyneS	8703	
4144	Datel	ADC-ET10B	
	TeledyneS	8704	
4145	Datel	ADC-ET12B	
	TeledyneS	8705	
4146	Datel	ADC-EK12D	
	TeledyneS	8750	
4551	AD	AD7507	
	Burr-Brown	**MPC8D**	**3149**
	Datel	**MVD-807**	**3163**
		MXD-807	**3163**
	Harris	HI507	
	Intersil	IH6216	
	MicroPwr	MP7507	
	PMI	MUX-28	
	Siliconix	DG507A	
4552	**Burr-Brown**	**MPC16S**	**3149**
	Datel	MX1606	
	Harris	HI506A	
4553	**Burr-Brown**	**MPC4D**	**3149**
	Harris	HI509	
	Intersil	IH6208	
	MicroPwr	MP7509	
		MP7509DI	
	National	LF11509	
		LF13509	
	PMI	MUX-24	
	Siliconix	DG509A	
4554	AD	AD7501	
	Burr-Brown	**MPC8S**	**3149**
	Datel	MUX808	
		MX-808	**3163**
	Harris	HI508	
	Intersil	IH6108	
	MicroPwr	MP7501	
		MP7508	
	National	LF11508	
		LF13508	
4554	PMI	DMX-88	
		MUX-08	
		MUX-88	
	Siliconix	DG508A	
4780	**Datel**	**VFQ-1**	**3163**
	TeledyneS	9400	
4781	TeledyneS	9401	
4782	TeledyneS	9402	
4856	AD	AD583	
	Datel	**SHM-IC-1**	**3163**
	Harris	HA-2425	
	PMI	SMP-10	
		SMP-11	
4860	AD	HTC0300A	
	MicroNet	**MN0300A**	**3205**
		MN376	**3205**
		MN377	
4866	Burr-Brown	SHC5320	
	Datel	SHM-20	
	Harris	HA-5320	
TP4860	AD	HTC-0300	
		HTC0300	
	Burr-Brown	SCH804	
		SHC804	**3148**
	Datel	**SHM4860**	**3163**
	DDC	THA-05203	
TP5214	AD	AD5214	
	Datel	**ADC-5214**	**3160,3162**
	HybridSys	MN5214	
	MicroNet	MN5214	
TP565A	AD	AD565	
		AD565A	
	Fairchild	UA565	
	Harris	HI565A	
	MicroNet	MN565A	
	Motorola	MC3412	
TP574A	AD	AD574	
	Burr-Brown	ADC574A	
	Datel	ADC574A	
	Harris	HI574A	
	HybridSys	HS574	
	MCE	MCE574	
	MicroNet	**MN574A**	**3203**
	MicroPwr	MP574	
TP7541	AD	AD7541	
	Datel	**DAC-7541**	**3162**
	Harris	HI7541	
	HybridSys	DAC331	
		HS7541	
	Intersil	AD7541	
		ICL7541	
	MicroPwr	MP7541	
		MP7621	
	National	AD7521	
	Siliconix	SI7541	
TPDAC80	AD	ADDAC80	
		ADDAC85	
		DAC80	
	Burr-Brown	DAC80	
		DAC800	
		DAC85	
		DAC850	
	Datel	DAC-85	
		DAC-85C	
		DAC-HZ12B	
	Harris	HI5685	
	HybridSys	DAC9356	
		HSDAC80	
	MicroNet	**DAC80**	**3204**
		DAC85	
	National	DAC1280	
		DAC1285	

Teledyne Semiconductor

Manufacturer Device	Replacement Source	Device	IC Master Page
747	AMD	747	
	Fairchild	µA747	
	Hitachi	HA17747	
	MicroPwr	MPOP04	
	Motorola	**MC1747**	**3617**
	National	LM747	
	NEC	µPC251	
	PMI	**OP-04**	**3636**
		PM747	
	Raytheon	RC747	
		RM747	
	RCA	**CA747**	**3672**
	Signetics	**µA747**	**3721**
	TI	µA747	
◆7541	AD	AD7541	
	Datel	**DAC-7541**	**3162**
◆7541	Harris	HI7541	
	HybridSys	DAC331	
		HS7541	
	Intersil	AD7541	
		ICL7541	
	MicroPwr	MP7541	
		MP7621	
	National	AD7521	
	Siliconix	SI7541	
	TeledyneP	TP7541	
8700	**Datel**	**ADC-EK8B**	**3161**
	TeledyneP	4140	
8701	**Datel**	**ADC-EK10B**	**3161**
	TeledyneP	4141	
8702	**Datel**	**ADC-EK12B**	**3161**
	TeledyneP	4142	
8703	Datel	ADC-ET8B	
	TeledyneP	4143	
8704	Datel	ADC-ET10B	
	TeledyneP	4144	
8705	Datel	ADC-ET12B	
	TeledyneP	4145	
8750	Datel	ADC-EK12D	
	TeledyneP	4146	
9400	**Datel**	**VFQ-1**	**3163**
	TeledyneP	4780	
9401	TeledyneP	4781	
9402	TeledyneP	4782	
9491	AD	AD589	
	Ferranti	ZN423	
	Intersil	**ICL8069**	**3604**
	Maxim	ICL8069	
	MicroPwr	**MP5010**	**688,3607**
	National	LM113	
		LM313	
	TeledyneS	T-SC9491	
◆9495	**MicroPwr**	**MPREF-02**	**688,3607**
	PMI	REF02	
T-SC9491	AD	AD589	
	Ferranti	ZN423	
	Intersil	**ICL8069**	**3604**
	Maxim	ICL8069	
	MicroPwr	**MP5010**	**688,3607**
	National	LM113	
		LM313	
	TeledyneS	9491	
TSC14433	**Motorola**	**MC14433**	**3629**
	TeledyneS	TSC14433A	
TSC7106	**Intersil**	**ICL7106**	**3198**
	Maxim	ICL7106	
TSC7107	**Intersil**	**ICL7107**	**3198**
	Maxim	ICL7107	
TSC7109	**Datel**	**ADC-7109**	**3159**
	Intersil	**ICL7109**	**3199**
	Maxim	ICL7109	
TSC7116	**Intersil**	**ICL7116**	**3198**
	Maxim	ICL7116	
TSC7117	**Intersil**	**ICL7117**	**3198**
	Maxim	ICL7117	
		ICL7126	
	TeledyneC	TSC7117	
TSC7126	**Intersil**	**ICL7126**	**3198**
	Maxim	ICL7126	
TSC7135	**Intersil**	**ICL7135**	**3199**
	Maxim	ICL7135	
	Siliconix	**SI7135**	**3248,3254**
		Si7135	
TSC7211	Hughes	H7211	
	Intersil	**ICM7211**	**1091**
	Maxim	ICM7211	
	RCA	**CD22104**	**1147**
		CD22105	**1147**
TSC7212	**Intersil**	**ICM7212**	**1091**
	Maxim	ICM7212	
◆TSC8640	Harris	HI7541	
◆TSC8641	Harris	HI7541	
TSC9495	AD	AD581	
	Harris	HA1608	
	LinearTech	LTREF01	
		REF-01A	
	Maxim	REF01	
	MicroPwr	MP5531	
		MPREF01	
	Motorola	MC1400AG10	
		MC1400AU10	
		MC1500AU10	
	PMI	REF-01AZ	
		REF01	
	Raytheon	**REF-01**	**3652**
		REF01	
TSC9496	LinearTech	LTREF02	
		REF-02E	
	Maxim	REF02	
	MicroPwr	MP5532	
	Motorola	MC1400AU5	
		MC1500AU5	
	PMI	REF-02EZ	
		REF02	
	Raytheon	REF02	

Telefunken

Manufacturer Device	Replacement Source	Device	IC Master Page
TBA120	National	TBA120	
	Siemens	TBA120	
TBA530	Plessey	TBA530	
TBA540	Plessey	TBA540	
TBA560	Plessey	TBA560	
TDA1083	Sprague	ULN-2204	
	Telefunken	U417B	
	Toshiba	TA7613	
TDA1170	Fairchild	µA7327	
	SGS	TDA1170	
	Sprague	ULN-2270	
	ThomsonCSF	TDA1170	
◆TDA2002	Hitachi	TDA2002	
	NEC	µPC2002	
	SGS	TDA2002	
TDA2003	Exar	XR2003C	
		XR2203C	
	Fairchild	MC1413	
	Mitsubishi	M54523	
	Motorola	**MC1413**	**3212**
		ULN2003	**3212**
	NEC	µPA2003	
	RIFA	PBD352303	
	Sanyo	LB1233	
	SGS	L203	
		ULN2003	
	Signetics	NE5603	
		ULN2003	**3721**
	SiliconG	SG2003	
	Sprague	ULN-2003	
	TI	ULN2003A	
	Toshiba	TD62003	
		TD62103	
TDA2030	SGS	TDA2030	
	ThomsonCSF	TDA2030	
TDA2140	SGS	TDA2140	
TDA2151	SGS	TDA2151	
TDA2161	SGS	TDA2161	
TDA2591	National	TDA2591	
TDA2593	National	TDA2593	
	Plessey	TDA2593	
	Signetics	**TDA2593**	**3731**
	ThomsonCSF	TDA2593	
◆TDA4420	SGS	TDA4420	
TDA800	Fairchild	TBA800	
	Plessey	TBA800	
	SGS	TBA800	
	ThomsonCSF	TBA800	
TDA810	Fairchild	TBA810	
	SGS	TBA810	
U3870	Mostek	MK2870	
U417B	Sprague	ULN-2204	
	Telefunken	TDA1083	
	Toshiba	TA7613	

Telmos

Manufacturer Device	Replacement Source	Device	IC Master Page
1840	Sierra	SC11401	
SD5000	**Siliconix**	**SD5000**	**3223,3240**
SD5001	**Siliconix**	**SD5001**	**3223,3240**
SD5002	**Siliconix**	**SD5002**	**3223,3240**
◆TMD54HC240	Mitel	MD54HC240	
	Motorola	**MC54HC240**	**1124**
	National	MM54HC240	
	RCA	**CD54HC240**	**1149**
	Signetics	54HC240	
	SSS	SS54HC240	
	Supertex	SI54HC240	
	TI	**SN54HC240**	**714**
◆TMD54HC241	Mitel	MD54HC241	
	Motorola	**MC54HC241**	**1124**
	National	MM54HC241	
	RCA	**CD54HC241**	**1149**
	Signetics	54HC241	
	SSS	SS54HC241	
	Supertex	SI54HC241	
	TI	**SN54HC241**	**714**
TMD54HC244	Mitel	MD54HC244	
	Motorola	**MC54HC244**	**1124**
	National	MM54HC244	

(Continued)

◆ Discontinued

Bold face device numbers indicate manufacturers data is provided in the IC Master on the pages noted.

ALTERNATE SOURCE DIRECTORY

Telmos (Cont'd)

Manufacturer Device	Replacement Source	Device	IC Master Page
TMD54HC244	**RCA**	**CD54HC244**	**1149**
	Signetics	54HC244	
	SSS	SS54HC244	
	Supertex	SI54HC244	
	TI	**SN54HC244**	**714**
◆TMD54HC373	Mitel	MD54HC373	
	Motorola	**MC54HC373**	**1126**
	National	MM54HC373	
	RCA	**CD54HC373**	**1150**
	Signetics	54HC373	
	SSS	SS54HC373	
	Supertex	SI54HC373	
	TI	**SN54HC373**	**714**
◆TMD54HC374	Mitel	MD54HC374	
	Motorola	**MC54HC374**	**1126**
	National	MM54HC374	
	RCA	**CD54HC374**	**1149**
	Signetics	54HC374	
	SSS	SS54HC374	
	Supertex	SI54HC374	
	TI	**SN54HC374**	**714**
◆TMD54HCT240	CTI	54HCT240	
	Mitel	MD54HCT240	
	Motorola	MC54HCT240	
	National	MM54HCT240	
	RCA	**CD54HCT240**	**1149**
	SPI	SP54HCT240	
	Supertex	SI54HCT240	
	TI	**SN54HCT240**	**714**
◆TMD54HCT241	CTI	54HCT241	
	Mitel	MD54HCT241	
	Motorola	MC54HCT241	
	National	MM54HCT241	
	RCA	**CD54HCT241**	**1149**
	SPI	SP54HCT241	
	Signetics	54HCT241	
	SSS	SS54HCT241	
	Supertex	SI54HCT241	
	TI	**SN54HCT241**	**714**
◆TMD54HCT244	CTI	54HCT244	
	Mitel	MD54HCT244	
	Motorola	MC54HCT244	
	National	MM54HCT244	
	RCA	**CD54HCT244**	**1149**
	SPI	SP54HCT244	
	Signetics	54HCT244	
	SSS	SS54HCT244	
	Supertex	SI54HCT244	
	TI	**SN54HCT244**	**714**
◆TMD54HCT373	CTI	54HCT373	
	Mitel	MD54HCT343	
		MD54HCT373	
	Motorola	MC54HCT373	
	National	MM54HCT373	
	RCA	**CD54HCT373**	**1150**
	SPI	SP54HCT373	
	Signetics	54HCT373	
	SSS	SS54HCT373	
	Supertex	SI54HCT373	
	TI	**SN54HCT373**	**714**
◆TMD54HCT374	CTI	54HCT374	
	Mitel	MD54HCT374	
	Motorola	MC54HCT374	
	National	MM54HCT374	
	RCA	**CD54HCT374**	**1149**
	SPI	SP54HCT374	
	SSS	SS54HCT374	
	Supertex	SI54HCT374	
	TI	**SN54HCT374**	**714**
◆TMD74HC240	Hitachi	HD74HC240	
	Mitel	MD74HC240	
	Motorola	**MC74HC240**	**1124**
	National	MM74HC240	
	Nitron	NC74HC240	
	RCA	**CD74HC240**	**1149**
	SPI	SP74HC240	
	SGS	M74HC240	
	Signetics	**74HC240**	**1157**
	SSS	SS74HC240	
	Supertex	SI74HC240	
	TI	SN74HC240	
	Toshiba	**TC40H240**	**1363**
	Universal	US74HC240	
	Zytrex	ZX74HC240	
◆TMD74HC241	Hitachi	HD74HC241	
	Mitel	MD74HC241	
	Motorola	**MC74HC241**	**1124**
	National	MM74HC241	
	Nitron	NC74HC241	
	RCA	**CD74HC241**	**1149**
			(Continued)
◆TMD74HC241	SPI	SP74HC241	
	SGS	M74HC241	
	Signetics	**74HC241**	**1157**
	SSS	SS74HC241	
	Supertex	SI74HC241	
	TI	SN74HC241	
	Universal	US74HC240	
	Zytrex	ZX74HC241	
◆TMD74HC244	Hitachi	HD74HC244	
	Mitel	MD74HC244	
	Motorola	**MC74HC244**	**1124**
	National	MM74HC244	
	Nitron	NC74HC244	
	RCA	**CD74HC244**	**1149**
	SPI	SP74HC244	
	SGS	M74HC244	
	Signetics	**74HC244**	**1158**
	SSS	SS74HC244	
	Supertex	SI74HC244	
	TI	SN74HC244	
	Universal	US74HC244	
	Zytrex	ZX74HC244	
◆TMD74HC373	Hitachi	HD74HC373	
	Mitel	MD74HC373	
	Motorola	**MC74HC373**	**1126**
	National	MM74HC373	
	Nitron	NC74HC373	
	RCA	**CD74HC373**	**1150**
	SPI	SP74HC373	
	SGS	M74HC373	
	Signetics	**74HC373**	**1158**
	SSS	SS74HC373	
	Supertex	SI74HC373	
	TI	SN74HC373	
	Universal	US74HC373	
	Zytrex	ZX74HC373	
◆TMD74HC374	Hitachi	HD74HC374	
	Mitel	MD74HC374	
	Motorola	**MC74HC374**	**1126**
	National	MM74HC374	
	Nitron	NC74HC374	
	RCA	**CD74HC374**	**1149**
	SPI	SP74HC374	
	SGS	M74HC374	
	Signetics	**74HC374**	**1158**
	SSS	SS74HC374	
	TI	SN74HC374	
	Universal	US74HC374	
	Zytrex	ZX74HC374	
◆TMD74HCT240	CTI	74HCT240	
	Hitachi	HD74HCT240	
	Micrel	MIC74HCT240	
	MicroTech	74HCTR240	
	Mitel	MD74HCT240	
	Motorola	MC74HCT240	
	National	MM74HCT240	
	Nitron	NC74HCT240	
	Plessey	MV74HCT240	
	RCA	**CD74HCT240**	**1149**
	SPI	SP74HCT240	
	SGS	M74HCT240	
	Signetics	**74HCT240**	**1157**
	SSS	SS74HCT240	
	Supertex	SI74HCT240	
	TI	SN74HCT240	
	Toshiba	**TC74HCT240**	**1363**
	Universal	US74HCT240	
	Zytrex	ZX74HCT240-2	
◆TMD74HCT241	CTI	74HCT241	
	Hitachi	HD74HCT241	
	Micrel	MIC74HCT241	
	MicroTech	74HCTR241	
	Mitel	MD74HCT241	
	Motorola	MC74HCT241	
	National	MM74HCT241	
	Nitron	NC74HCT241	
	Plessey	MV74HCT241	
	RCA	**CD74HCT241**	**1149**
	SPI	SP74HCT241	
	SGS	M74HCT241	
	Signetics	**74HCT241**	**1157**
	SSS	SS74HCT241	
	Supertex	SI74HCT241	
	TI	SN74HCT241	
	Toshiba	**TC74HCT241**	**1363**
	Universal	US74HCT241	
	Zytrex	ZX74HCT241-2	
◆TMD74HCT244	CTI	74HCT244	
	Hitachi	HD74HCT244	
	Micrel	MIC74HCT244	
	MicroTech	74HCTR244	
	Mitel	MD74HCT244	
			(Continued)
◆TMD74HCT244	Motorola	MC74HCT244	
	National	MM74HCT244	
	Nitron	NC74HCT244	
	Plessey	MV74HCT244	
	RCA	**CD74HCT244**	**1149**
	SPI	SP74HCT244	
	SGS	M74HCT244	
	Signetics	**74HCT244**	**1158**
	SSS	SS74HCT244	
	Supertex	SI74HCT244	
	TI	SN74HCT244	
	Toshiba	**TC74HCT244**	**1363**
	Universal	US74HCT244	
	Zytrex	ZX74HCT244-2	
◆TMD74HCT373	CTI	74HCT373	
	GTEMicro	G74SC373	
	Hitachi	HD74HCT373	
	Micrel	MIC74HCT373	
	MicroTech	74HCTR373	
	Mitel	MD74HCT373	
	Motorola	MC74HCT373	
	National	MM74HCT373	
	Nitron	NC74HCT373	
	Plessey	MV74HCT373	
		MV74SC373	
	RCA	**CD74HCT373**	**1150**
	SPI	SP74HCT373	
	SGS	M74HCT373	
	Signetics	**74HCT373**	**1158**
	SSS	SS74HCT373	
	Supertex	SI74HCT373	
	TI	SN74HCT373	
	Toshiba	**TC74HCT373**	**1363**
	Universal	US74HCT373	
	Zytrex	ZX74HCT373-2	
◆TMD74HCT374	CTI	74HCT374	
	GTEMicro	G74SC374	
	Hitachi	HD74HCT374	
	Micrel	MIC74HCT374	
	MicroTech	74HCTR374	
	Mitel	MD74HCT374	
	Motorola	MC74HCT374	
	National	MM74HCT374	
	Nitron	NC74HCT374	
	Plessey	MV74HCT374	
		MV74SC374	
	RCA	CD74HCT374	
	SPI	SP74HCT374	
	SGS	M74HCT374	
	Signetics	**74HCT374**	**1158**
	SSS	SS74HCT374	
	Supertex	SI74HCT374	
	TI	SN74HCT374	
	Toshiba	**TC74HCT374**	**1363**
	Universal	US74HCT374	
	Zytrex	ZX74HCT374-2	
TML1841	AD	AD7226	

Texas Instruments

Manufacturer Device	Replacement Source	Device	IC Master Page
24S81	AMD	27S185	
		AM27S185	
	Fujitsu	MB7128	
	Hitachi	HN25085	
	MMI	5389	
		6389	**4102**
		6389-1	
		63S841	**4101,4102**
	Motorola	**MCM7685**	**4124**
	National	77S185	
		87S185	
		DM87S185	
	Raytheon	29651	
		29651A	**4134**
	Signetics	82S185	
		N82HS185	
		N82S185	**4166**
	TI	TBP24S81	
28P166	AMD	27PS191	
	MMI	53PS1681	
		63PS1681	
	Raytheon	**29683**	**4134**
28P42	**Raytheon**	**29623**	**4134**
28P86	AMD	27PS181	
	Raytheon	29633	
	Signetics	82PS181	
28S166	AMD	27S191	
		AM27S191	
	Fairchild	932511	
	Fujitsu	MB7138	
	Harris	76161	
		HM76161	
			(Continued)
28S166	Hitachi	HN25169	
	MMI	**63S1681**	**4101,4103**
	Motorola	MCM76101	
	National	77S191	
		87S191	
		DM87S191	
	Raytheon	**29681**	**4134**
	Signetics	82S191	
		N82S191	**4167**
	TI	TBP28S166	
28S42	AMD	27S29	
		LF157A	
	Fairchild	LF157A	
	Harris	7649	
	MMI	5349-1	
		6349-1	
	National	545472	
		74S472	
		LF157A	
	PMI	PM157A	
	Raytheon	**29621**	**4134**
	Signetics	825147	
28S86	AMD	AM27S181M	
	Cypress	CY7C282M	
	Fairchild	932451	
		93451	
	Fujitsu	MB7132	
	Harris	7681	
	Hitachi	HN25089	
	MMI	5381-1	
		6381	**4102**
		6381-1	
	Motorola	**MCM7681**	**4124**
	National	DM77S181	
		DM77S281	
		DM87S281	
	Raytheon	29631AM	
		29632	
	Signetics	82S181	
		NS82HS195	
		S82HS181	
		S82S181	
	TI	TBP28S86AM	
74HCT9510	AMD	AM29510	
		AMD29510	
		AMD29L510	
	AD	ADSP1010	
		ADSP1010A	
	Cypress	CY7C510	
	IDT	**IDT7210**	**1084,1088**
	LogicDev	LMA1010	
	MicroPwr	**MP1010**	**688**
	TI	SN74HCT9510	
	TRW-LSI	TDC1010	
		TDC2010	
		TMC2010	
		TMC2110	
	Weitek	WTL1010	
		WTL2010	
		WTL2044	
		WTL2245	
◆9615	Fairchild	96115	
	TI	**SN55115**	**721**
		SN75115	
9636	Motorola	MC3488	
	TI	9636A	
9637	TI	9637A	
ADC0801	National	ADC0801	
ADC0802	**Intersil**	**ADC0802**	**3199**
	National	ADC0802	
ADC0803	**Datel**	**ADC-830**	**3157,3162**
	Intersil	**ADC0803**	**3199**
	National	ADC0803	
ADC0804	**Intersil**	**ADC0804**	**3199**
	National	ADC0804	
ADC0808	Mostek	MK0808	
	National	ADC0808	
ADC0809	Mostek	MK50809	
	National	ADC0809	
◆ADC0817	Mostek	MK50817	
	National	ADC0817	
AM26LS31	AMD	AM26LS31	
	Motorola	**AM26LS31**	**3211,3212**
	National	DS26LS31	
AM26LS32A	AMD	AM28LS32	
	National	DS26LS32	
AM26LS33A	AMD	AM26LS33	
AM26S10	AMD	AM26S10	
	Motorola	DC26S10	
	National	DS26S10	

◆ Discontinued

The manufacturers report their devices can be used as direct replacements.
Performance details often differ, so compare the specifications considering your requirements.

Texas Instruments (Cont'd)

Manufacturer Device	Replacement Source	Replacement Device	IC Master Page
AM26S11	AMD	AM26S11	
	National	DS26S11	
DM54S472	Fujitsu	MBM7124	
	National	DM54S472	
	Signetics	S82S147	
DS7831	National	DS7831	
DS7832	National	DS7832	
DS8820	National	DS8820	
		DS8880	
	TI	SN75182	
		SN75480	
DS8830	National	DS8830	
	TI	SN75183	
DS8831	National	DS8831	
DS8832	National	DS8832	
LL081BC	**Motorola**	**MC34001A**	**3616**
LM101A	LinearTech	LM101A	
	National	LM101A	
LM106	National	LM106	
LM107	AMD	LM107	
	AD	**AD741S**	**3507**
	Burr-Brown	3500	
	LinearTech	LM107	
	National	LH741A	
		LM107	
	PMI	PM741	
	Raytheon	RC741	
	SiliconG	SG107	
	ThomsonCSF	LM107	
LM108	AD	AD108	
	Fairchild	μA108	
	Harris	LM108	
	Intersil	**LM108**	**3600,3601**
	LinearTech	LM108	
	MicroPwr	**MP108**	**688,3607**
	Motorola	**LM108**	**3615**
	National	LM108	
	PMI	PM108	
	SGS	M108	
	SiliconSys	**SSI108**	**3736**
◆LM109	Fairchild	μA109	
	IPS	**IP140-5**	**3599**
	Motorola	LM109	
	National	LM109	
	SiliconG	SG109	
	ThomsonCSF	SFC2109	
LM111	AD	AD111	
	Fairchild	μA111	
	LinearTech	LM111	
	Motorola	**LM111**	**3631**
	National	LM111	
	Raytheon	LM111	
	Signetics	**LM111**	**3725**
	SiliconG	SG111	
	ThomsonCSF	LM111	
LM117	Fairchild	μA117	
	IPS	**IP117**	**3599**
	LinearTech	LM117	
	MCE	MCE-LM117	
	Motorola	**LM117**	**3625**
	SiliconG	SG117	
	ThomsonCSF	LM117	
		TDC0117	
	Unitrode	UC117	
LM118	Harris	LM118	
	LinearTech	LM118	
	National	LM118	
LM124A	AMD	LM124A	
	LinearTech	LT1014	
	Motorola	LM124A	
	National	LM124A	
	RCA	CA124A	
	Signetics	LM124A	
	SiliconG	SG124	
◆LM137	**IPS**	**IP137**	**3599**
	LinearTech	LM137	
	MCE	MCE-LM137	
	Motorola	**LM137**	**3625**
	National	LM137	
	ThomsonCSF	LM137	
		TDC0137	
	Unitrode	UC137	
LM139	Fairchild	μA139	
	Motorola	**LM139**	**3631**
	National	LM139	
	PMI	CMP-04	
		PM139	
	Raytheon	LM139	
	RCA	**CA139**	**3672,3677**
	Signetics	LM139	
LM139A	AMD	LM139A	
	Motorola	**LM139A**	**3631**
	National	LM139A	
	PMI	CMP-04	
		PM139A	
	RCA	**CA139A**	**3672,3677**
LM148	LinearTech	LT1014	
	MicroPwr	OP11	
	National	LM148	
	PMI	OP11	
	Raytheon	LM148	
		RM4156	
		RM4158	
LM158	LinearTech	LT1013	
	Motorola	**LM158**	**3617**
	National	LM158A	
	Raytheon	RM4139	
	RCA	**CA158A**	**3672**
	Signetics	**LM158**	**3729**
LM193	**Motorola**	**LM193**	**3631**
	National	LM193A	
	Signetics	**LM193**	**3725**
LM201	National	LM748	
	SGS	LM748	
		LS148	
	SiliconG	SG201	
	TI	SN72748P	
		μA748	
	ThomsonCSF	LM201	
		LM748	
LM201A	National	LM201A	
◆LM204	National	LM204	
	SiliconG	SG204	
	ThomsonCSF	LM204	
◆LM206	National	LM206	
LM211	AD	AD211	
	Motorola	**LM211**	**3631**
	National	LM211	
	RCA	LM211	
	Signetics	**LM211**	**3725**
	SiliconG	SG211	
	ThomsonCSF	LM211	
LM217	**IPS**	**IP217**	**3599**
	MCE	MCE-LM217	
	Motorola	**LM217**	**3625**
	National	LM217	
	SiliconG	SG217	
	ThomsonCSF	TDE0117	
	Unitrode	UC217	
LM218	National	LM218	
	ThomsonCSF	TDE0118	
LM237	**IPS**	**IP237**	**3599**
	MCE	MCE-LM237	
	Motorola	**LM237**	**3625**
	National	LM237	
	Unitrode	UC237	
LM239	Fairchild	UA250	
		UA26LS31	
		UA26LS32	
		μA239	
	Motorola	**LM239**	**3631**
	National	LM239	
	PMI	CMP-04	
		PM239	
	Raytheon	LM239	
	RCA	**CA239**	**3672,3677**
	Signetics	LM239	
	ThomsonCSF	TDE0139	
LM248	National	LM248	
	ThomsonCSF	TDE0148	
LM258	**Motorola**	**LM258**	**3617**
	National	LM258A	
	RCA	**CA258A**	**3672**
	Signetics	**LM258**	**3729**
	ThomsonCSF	TDE0158	
LM2900	Hitachi	HA17301	
	Motorola	**LM2900**	**3618**
		MC3301	**3618**
	National	LM2900	
		LM3301	
	Raytheon	LM2900	
		RC3301	
LM2901	Cypress	CY7C901	
	Fairchild	μA2901	
		μA3302	
	Motorola	**LM2901**	**3631**
		MC3302	**3631**
	National	LM2901	
		LM3302	
	NEC	μPC2901	
	PMI	CMP-04	
	Raytheon	LM2901	
			(Continued)
LM2901	Raytheon	RC3302	
	RCA	CA3302	
	SGS	LM2901	
		MC3302	
	Signetics	**LM2901**	**3721,3722**
		MC3302	**3721**
	SiliconG	SG324A	
	TI	LM3302	
	ThomsonCSF	LM2901	
LM2902	Fairchild	μA2902	
	Hitachi	HA17902	
	Motorola	**LM2902**	**3618**
	National	LM2902	
	NEC	μPC2902	
	Raytheon	LM2902	
	SGS	LM2902	
	ThomsonCSF	LM2902	
LM2903	AD	AD311	
	Fairchild	μA311	
	LinearTech	LM311	
	Motorola	**LM2903**	**3631**
		LM311	**3631**
	National	LM2903	
		LM311	
	NEC	μPC271	
		μPC311	
	Raytheon	LM311	
	RCA	**CA311**	**3672,3677**
		LM311	
	SGS	LM2903	
		LM311	
	Signetics	**LM2903**	**3725**
		LM311	**3721**
	SiliconG	SG311	
	TI	LM311	
	ThomsonCSF	LM2903	
		LM311	
		SFC3111	
LM2904	**Motorola**	**LM2904**	**3617**
	RCA	CA2904	
	ThomsonCSF	LM2904	
LM293	**Motorola**	**LM293**	**3631**
	National	LM293	
	Signetics	LM293	
LM301	AD	AD301	
	Fairchild	μA301A	
	Intersil	AD301	
	LinearTech	LM301	
		LM301A	
	Motorola	LM301	
	National	LM301	
		LM301A	
	NEC	μPC157	
		μPC301	
	Raytheon	LM301	
	RCA	CA301	
		LM301	
	SiliconG	SG301	
	TI	LM301A	
	ThomsonCSF	LM301A	
	Toshiba	TA7506	
LM301A	AD	AD301	
	Fairchild	μA301A	
	Intersil	AD301	
	LinearTech	LM301	
		LM301A	
	Motorola	LM301	
	National	LM301	
		LM301A	
	NEC	μPC157	
		μPC301	
	Raytheon	LM301	
	RCA	CA301	
		LM301	
	SiliconG	SG301	
	TI	LM301	
	ThomsonCSF	LM301A	
	Toshiba	TA7506	
◆LM305A	National	LM305A	
◆LM308	AD	AD308	
	Burr-Brown	3500	
		3501	
	Fairchild	μA308	
	Intersil	AD308	
		LM308	**3600,3601**
	MicroPwr	**MP308**	**3607**
	Motorola	**LM308**	**3615**
	National	LM308	
	Raytheon	LM308	
LM311	AD	AD311	
	Fairchild	μA311	
	LinearTech	LM311	
			(Continued)
LM311	**Motorola**	**LM2903**	**3631**
		LM311	**3631**
	National	LM2903	
		LM311	
	NEC	μPC271	
		μPC311	
	Raytheon	LM311	
	RCA	**CA311**	**3672,3677**
		LM311	
	SGS	LM2903	
		LM311	
	Signetics	**LM2903**	**3725**
		LM311	**3721**
	SiliconG	SG311	
	TI	LM2903	
	ThomsonCSF	LM2903	
		LM311	
		SFC3111	
LM317	Fairchild	μA317	
	IPS	**IP317**	**3599**
	LinearTech	LM317	
	MCE	MCE-LM317	
	Motorola	**LM317**	**3625**
	National	LM317	
	SGS	LM317	
	SiliconG	SG317	
	ThomsonCSF	LM317	
		TDB0117	
	Unitrode	UC317	
LM318	AD	AD518	
	Harris	LM318	
	LinearTech	LM318	
	National	LM318	
	NEC	μPC159	
	ThomsonCSF	LM318	
		TDB0118	
LM320-12	Fairchild	μA7912	
		μA79M12	
	IPS	**IP320-12**	**3599**
		IP7912	**3599**
	Motorola	MC7912	
	National	LM320MP12	
		LM7912	
		LM79M12	
	NEC	μPC7912	
	SGS	L7912	
	SiliconG	SG320P-12	
		SG7912	
	TI	μA7912	
	ThomsonCSF	μA7912	
	Samsung	MC7912	
	Unitrode	UC7912	
LM320-5	Fairchild	μA7915	
	IPS	**IP320-15**	**3599**
		IP7915	**3599**
	Motorola	MC7915	
	National	LM320-15	
		LM320T15	
		LM7915	
	NEC	μPC7915	
	SGS	L7915	
	SiliconG	SG320-15	
		SG7915	
	TI	μA7915	
	ThomsonCSF	μA7915	
	Samsung	MC7915	
	Unitrode	UC7915	
LM324A	National	LM324A	
	SGS	LM324A	
	Samsung	**LM324A**	**3679**
LM3302	Cypress	CY7C901	
	Fairchild	μA2901	
		μA3302	
	Motorola	**LM2901**	**3631**
		MC3302	**3631**
	National	LM2901	
		LM3302	
	NEC	μPC2901	
	PMI	CMP-04	
	Raytheon	LM2901	
		RC3302	
	RCA	CA3302	
	SGS	LM2901	
		MC3302	
	Signetics	**LM2901**	**3721,3722**
		MC3302	**3721**
	SiliconG	SG324A	
	TI	LM2901	
	ThomsonCSF	LM2901	
LM337	**IPS**	**IP337**	**3599**
	LinearTech	LM337	
	MCE	MCE-LM337	
			(Continued)

◆ Discontinued

Bold face device numbers indicate manufacturers data is provided in the IC Master on the pages noted.

Texas Instruments (Cont'd)

Manufacturer Device	Replacement Source	Device	IC Master Page
LM337	**Motorola**	**LM337**	**3625**
	National	LM337	
	SiliconG	SG337	
	ThomsonCSF	TDB0137	
	Unitrode	UC337	
LM339	AMD	LM339A	
	Fairchild	μA339	
	Hitachi	HA17901	
	Motorola	**LM339**	**3631**
	National	LM339	
	NEC	μPC339	
	PMI	CMP-04	
		PM339A	
	Raytheon	LM339	
	RCA	**CA339**	**3672,3677**
		CA339A	**3672,3677**
		LM339	
	SGS	LM339	
	ThomsonCSF	LM339	
		TDB0139	
LM340-15	Fairchild	μA7815	
		μA78L15	
	IPS	**IP140-15**	**3599**
		IP340-15	**3599**
		IP7815	**3599**
	Lambda	LAS1515	
		LMC7815	
		LμA7815	
	Motorola	**MC7815**	**3624**
		MC78L15	
	National	LM340-15	
		LM340LA-15	
		LM340T-15	
		LM7815	
		LM78L15	
	NEC	μPC7815	
		μPC78L15	
	SGS	L7815	
	SiliconG	SG340-15	
		SG7815	
	TI	μA7815	
		μA78L15	
	ThomsonCSF	μA7815	
	Toshiba	TA78015	
	Samsung	MC7815	
	Unitrode	UC7815	
LM340-18	Lambda	LMC7818	
	NEC	μPC7818	
	SiliconG	SG340-18	
		SG7818	
	TI	μA7818	
	ThomsonCSF	μA7818	
LM340-24	Lambda	LMC7824	
		LμA7824	
	Motorola	**MC7824**	**3624**
	NEC	μPC7824	
	SGS	L7824	
	SiliconG	SG7824	
	TI	μA7824	
	ThomsonCSF	μA7824	
	Samsung	MC7824	
LM350	Fairchild	μA78HGA	
	IPS	**IP350**	**3599**
	Lambda	LAS14U	
		LAS19U	
	LinearTech	LM350	
	Motorola	**LM350**	**3625**
	National	LM350	
	SiliconG	SG350	
LM358	**Motorola**	**LM358**	**3617**
	National	LM358A	
	NEC	μPC358	
	RCA	**CA358A**	**3672**
		LM358	
	Sanyo	LA6358	
	SGS	LM358	
	Signetics	**LM358**	**3722,3729**
		NE532	**3729**
	ThomsonCSF	LM358	
◆LM388	National	LM388	
LM3900	**Motorola**	**MC3401**	**3618**
	National	LM3401	
		LM3900	
	Raytheon	LM3900	
		RC3401	
	RCA	**CA3401**	**3674**
LM393	**Motorola**	**LM393**	**3631**
	Sanyo	LA6393	
	Signetics	LM393	
MC1445	Motorola	MC1445	
MC1456	**Datel**	**AM-460-2**	**3163**
	Elantec	**EHA2605**	**3538**
	Harris	HA-2605	
	Motorola	**MC1456**	**3616**
MC1489A	**Exar**	**XR1489A**	**3561**
	Fairchild	UA150	
		UA212A	
		μA1489A	
	Motorola	**MC1489A**	**3211,3212**
	National	DS1489A	
	SGS	MC1489	
	Signetics	**MC1489A**	**3720,3726**
	SiliconG	SG1489A	
	TI	SN75189A	
MC1556	**Elantec**	**EHA2600**	**3538**
	Fairchild	μA741	
	Harris	HA-2600	
	Motorola	**MC1556**	**3616**
	TeledyneP	1326	
MC3303	Fairchild	UA338	
		μA3303	
	Motorola	**MC3303**	**3618**
	SGS	MC3303	
	Signetics	**MC3303**	**3729**
MC3423	**Motorola**	**MC3423**	**3620**
	SiliconG	SG3423	
◆MC3443	Motorola	MC3443	
MC3446	Motorola	MC3446	
		MC3446A	**3210**
MC3471	Cherry	CS3471	
	Motorola	MC3471	
MC3486	**Motorola**	**MC3486**	**3211,3212**
	National	DS3486	
MC3487	**Motorola**	**MC3487**	**3211,3212**
	National	DS3487	
		DS3687	
MC3503	Raytheon	RM4137	
	Signetics	**MC3503**	**3729**
MC3523	**Motorola**	**MC3523**	**3620**
	SiliconG	SG3523	
N8T26A	Fairchild	μA8T26A	
	Motorola	**MC8T26A**	**3210**
	National	DS8T26A	
	Signetics	**N8T26A**	**1175**
NE5532	Exar	XR5532	
	Signetics	**NE5532**	**3720**
		NE5532A	**3720**
		SE5532	**3721,3729**
		SE5532A	**3721,3729**
	TI	NE5532A	
NE5532A	Exar	XR5532	
	Signetics	**NE5532**	**3720**
		NE5532A	**3720**
		SE5532	**3721,3729**
		SE5532A	**3721,3729**
	TI	NE5532	
NE5533	**Exar**	**XR5533**	**3556**
	Signetics	**NE5533**	**3708,3729**
		NE5533A	**3708,3729**
NE5534	AnalogSys	MA332	
	Datel	AM-453-2C	
	Exar	**XR5534**	**3557**
	Raytheon	RC5534	
	Signetics	**NE5534**	**3708,3720,3729**
		NE5534A	**3708,3720,3729**
	SSM	SSM2134	
	TI	NE5534A	
NE5534A	AnalogSys	MA332	
	Datel	AM-453-2C	
	Exar	**XR5534**	**3557**
	Raytheon	RC5534	
	Signetics	**NE5534**	**3708,3720,3729**
		NE5534A	**3708,3720,3729**
	SSM	SSM2134	
	TI	NE5534	
NE555	Exar	XR555	
	Fairchild	μA555	
	Hitachi	HA17555	
	Intersil	NE555	
	Mitsubishi	M51841	
		M51848	
		M5251	
		M5E555	
	Motorola	MC1455	
		(Continued)	
NE555	NEC	μPC1555	
	Raytheon	RC555	
	RCA	CA555	
	Sanyo	LB8555	
	SGS	NE555	
	Signetics	**NE555**	**3721**
		NE555N	
	ThomsonCSF	LM555	
	Samsung	**NE555**	**3679**
NE592-8	Intersil	NE592-8	
OP-12	LinearTech	LT1012	
	MicroPwr	MPOP-12	
	PMI	**OP-12**	**3636**
OP07D	AD	AD517	
		OP-07	
	Fairchild	UA714	
	Harris	HA-OP07	
		HA5130	
		HA5135	
	LinearTech	OP-07	
	Micra	MC0021	
	MicroPwr	MPOP07	
	NEC	UPC264	
	PMI	OP07	
	Raytheon	OP07	
PAL16L8A	Cypress	CYPAL16L8	
	MMI	PAL16L8	
		PAL16L8A	
	TI	TIBPAL16L8-20	
PAL16LA8-2	AMD	AMPAL16L8L	
	MMI	PAL16L8A-2	
PAL16R4A	AMD	AMPAL16R4	
	Cypress	CYPAL16R4	
	MMI	PAL16R4	
		PAL16R4A	
	National	PAL16R4	
	TI	TIBPAL16R4-20	
		TIBPAL16R4-25	**725,4759**
		TIBPAL16R4-30	
PAL16R4A-2	AMD	AMPALR4L	
	MMI	PAL16R4A-2	
PAL16R6A	AMD	AMPAL16R6	
	Cypress	CYPAL16R6	
	MMI	PAL16R6	
		PAL16R6A	
	National	PAL16R6	
	TI	TIBPAL16R6-20	
		TIBPAL16R6-25	**725,4759**
		TIBPAL16R6-30	
PAL16R6A-2	AMD	AMPAL16R6L	
	MMI	PAL16R6A-2	
PAL16R8A-2	AMD	AMPAL16R8L	
	MMI	PAL16R8A-2	
RC4558	Exar	XR4558	
	Fairchild	μA4558	
	Motorola	**MC4558**	**3617**
	National	LM1458	
	Raytheon	RC4558	
RM4136	Exar	XR4136M	
	Raytheon	RM4136	
SE5534	Signetics	SE554A	
	TI	SE5534A	
SE5534A	Signetics	SE554A	
	TI	**SE5534**	**718**
SE555	Exar	XR555M	
	Intersil	SE555	
	Motorola	MC1555	
	Raytheon	RM555	
	Signetics	**SE555**	**3724,3728**
SG1524	Cherry	CS1524	
	Exar	**XR1524**	**3558**
	IPS	**IP1524**	**3599**
	LinearTech	LT1524	
	National	LM1524	
	RCA	CA1524	
	SGS	SG1524	
		UC1524A	
	SiliconG	SG1524	
	Sprague	ULS-8124	
	Unitrode	**UC1524A**	**3739,3739**
SG1525A	Cherry	CS1525A	
	Exar	**XR1525A**	**3559**
	IPS	**IP1525A**	**3599**
	LinearTech	LT1525A	
	Motorola	**SG1525A**	**3626**
	SGS	SG1524A	
	SiliconG	SG1525A	
	Siliconix	PWM125	
		(Continued)	
SG1525A	Sprague	ULS-8125	
	Unitrode	**UC1525A**	**3739**
SG1527A	Cherry	CS1527A	
	IPS	IP1527A	
	LinearTech	LT1527A	
	Motorola	**SG1527A**	**3626**
	SGS	SG1527A	
	SiliconG	SG1527A	
	Siliconix	PWM27	
	Sprague	ULS-8125	
	Unitrode	**UC1527A**	**3739**
SG2524	Cherry	CS2524	
	Exar	XR2524	
	IPS	**IP2524**	**3599**
	RCA	CA2524	
	SGS	SG2524	
		UC2524A	
	SiliconG	SG2524	
	Sprague	ULQ-8124	
	Unitrode	**UC2524A**	**3739,3739**
SG2525A	Cherry	CS2525A	
	Exar	XR2525A	
	IPS	**IP2525A**	**3599**
	LinearTech	LT2525A	
	Motorola	**SG2525A**	**3626**
	SiliconG	SG2525A	
	Siliconix	PWM25B	
	Sprague	ULQ-8125	
	Unitrode	**UC2525A**	**3739**
SG2527A	Cherry	CS2527A	
	Exar	XR2527A	
	IPS	IP2527A	
	LinearTech	LT2527A	
	Motorola	**SG2527A**	**3626**
	SiliconG	SG2527A	
	Unitrode	**UC2527A**	**3739**
SG3524	Cherry	CS3524	
	Exar	**XR3524**	**3558**
	IPS	**IP3524**	**3599**
		IP3524B	**3599**
	National	LM3524	
	RCA	CA3524	
	SGS	SG3524	
		UC3524A	
	Signetics	**SG3524**	**3715,3720,3730**
	SiliconG	SG3524B	
	Sprague	ULN-8124	
	Unitrode	**UC3524A**	**3739,3739**
SG3525	SiliconG	SG3525A	
	Sprague	ULN-8125	
	Unitrode	**UC3524A**	**3739,3739**
SG3525A	Exar	XR3525A	
	IPS	**IP3525A**	**3599**
	LinearTech	LT3525A	
	Motorola	**SG3525A**	**3626**
	SGS	SG3525A	
	SiliconG	SG3525A	
	Siliconix	PWM25	
	Unitrode	**UC3525A**	**3739**
SG3527	SiliconG	SG3527A	
	Sprague	ULN-8127	
	Unitrode	**UC3527A**	**3739**
SG3527A	Cherry	CS3527	
		CS3527A	
	Exar	**XR3527A**	**3559**
	IPS	**IP3527**	**3599**
	LinearTech	LT3527A	
	Motorola	**SG3527A**	**3626**
	SGS	SG3527A	
	SiliconG	SG3527A	
SMJ4164	Inmos	IMS2600M	
SN10140	Signetics	10140	
SN10144	Fairchild	F10144	
	Motorola	**MCM10144**	**4123**
	Signetics	10144	
SN10147	**Motorola**	**MCM10147**	**4123**
SN10148	Hitachi	HD10148	
	Motorola	**MCM10148**	**4123**
	Signetics	10148	
SN10164	Fairchild	F10164	
	Hitachi	HD10164	
	Motorola	**MC10164**	**1129**
	Signetics	**10164**	**1173,1174**
SN10174	Fairchild	F10174	
	Hitachi	HD10174	
	Motorola	**MC10174**	**1129**
	Signetics	**10174**	**1173,1174**

◆ Discontinued

The manufacturers report their devices can be used as direct replacements.
Performance details often differ, so compare the specifications considering your requirements.

Texas Instruments (Cont'd)

Manufacturer Device	Replacement Source	Device	IC Master Page
SN5400	**Fairchild**	**5400**	**609,616,622,623**
	National	DM5400	
	Signetics	5400	
SN5401	National	DM5401	
SN5402	**Fairchild**	**5402**	**609,616,622,623**
	National	DM5402	
SN5403	National	DM5403	
SN5404	**Fairchild**	**5404**	**609,616,622,623**
		9016	
	National	DM5404	
		DM9016C	
SN5405	National	DM5405	
SN5406	National	DM5406	
SN5407	National	DM5407	
SN5408	**Fairchild**	**5408**	**609,616,622,623**
	National	DM5408	
SN5409	**Fairchild**	**5409**	**609,616,622,623**
	National	DM5409	
SN5410	**Fairchild**	**5410**	**609,616,622,623**
	National	DM5410	
SN54107	National	DM54107	
SN54109	National	DM54109	
	Signetics	54109	
SN54116	Signetics	54116	
SN54121	**Fairchild**	**54121**	**609,616,622,623**
	National	DM54121	
	Signetics	54121	
SN54122	**Fairchild**	**54122**	**609,616,622,623**
SN54123	**Fairchild**	**54123**	**609,616,622,623**
	National	DM54123	
	Signetics	54123	
SN54125	**Fairchild**	**54125**	**616**
	National	DM54125	
		DM7093	
SN54126	National	DM54126	
		DM7094	
	Signetics	54126	
SN5413	National	DM5413	
SN54132	National	DM54132	
	Signetics	54132	
SN5414	**Fairchild**	**5414**	**616**
	National	DM5414	
	Signetics	5414	
◆SN54145	National	DM54145	
SN54147	National	DM54147	
	Signetics	54147	
SN54148	National	DM54148	
		DM9318	
	Signetics	54148	
SN54150	**Fairchild**	**54150**	**616**
	National	DM54150	
SN54153	**Fairchild**	**54153**	**609,616,622,623**
	National	DM54153	
	Signetics	54153	
SN54155	National	DM54155	
SN54156	National	DM54156	
SN54157	**Fairchild**	**54157**	**609,616**
	National	DM54157	
	Signetics	54157	
SN5416	National	DM5416	
SN54160	National	DM54160	
	Raytheon	RM9310	
	Signetics	54160	
SN54161	**Fairchild**	**54161**	**616**
	National	DM54161	
	Signetics	54161	
SN54162	National	DM54162	
SN54163	National	DM54163	
	Signetics	54163	
SN54164	**Fairchild**	**54164**	**616**
	National	DM54164	
		DM7570	
	Signetics	54164	
SN54165	**Fairchild**	**54165**	**617**
	National	DM54165	
		DM7590	
	Signetics	54165	
SN54166	National	DM54166	
	Signetics	54166	
SN5417	National	DM5417	
SN54170	**Fairchild**	**54170**	**617**
	National	DM54170	
SN54173	**Fairchild**	**54173**	**617**
	National	DM54173	
		DM7551	
	Raytheon	RM8T10	
SN54174	**Fairchild**	**54174**	**609,617,622,623**
	National	DM54174	
	Signetics	54174	
SN54175	**Fairchild**	**54175**	**609,617,622,623**
	National	DM54175	
	Signetics	54175	
SN54176	National	DM54176	
	Raytheon	RM8280	
	Signetics	54176	
		S8280	
SN54177	National	DM54177	
		DM7281	
	Raytheon	RM8281	
	Signetics	54177	
		S7281	
		S8281	
SN54178	Raytheon	RM8270	
	Signetics	S8270	
SN54179	Raytheon	RM8271	
	Signetics	S8271	
SN54180	National	DM54180	
	Signetics	54180	
SN54181	National	DM54181	
	Raytheon	RM9341	
	Signetics	54181	
SN54182	National	DM54182	
	Raytheon	RM9342	
SN54184	National	DM54184	
SN54185A	National	DM54185A	
◆SN54187	National	DM54187	
SN54190	National	DM54190	
	Signetics	54190	
SN54191	**Fairchild**	**54191**	**617**
	National	DM54191	
	Signetics	54191	
SN54192	National	DM54192	
		DM7560	
SN54193	National	DM54193	
		DM7563	
◆SN54194	National	DM54194	
	Signetics	54194	
SN54195	Fairchild	9300	
	National	DM54195	
SN54196	National	DM54196	
	Signetics	54196	
SN54198	National	DM54198	
SN54199	National	DM54199	
SN5420	**Fairchild**	**5420**	**609,616,622,623**
	National	DM5420	
	Signetics	5420	
SN5423	National	DM5423	
SN5425	**Fairchild**	**5425**	**616**
	National	DM5425	
SN54251	National	DM54251	
		DM7121	
SN5426	National	DM5426	
	Signetics	5426	
SN5427	National	DM5427	
SN54279	**Fairchild**	**54279**	**617**
	Signetics	54279	
SN54284	National	DM7875A	
SN54285	National	DM7875B	
SN54298	**Fairchild**	**54298**	**617**
SN5430	**Fairchild**	**5430**	**609,616,622,623**
	National	DM5430	
SN5432	**Fairchild**	**5432**	**616**
	National	DM5432	
	Signetics	5432	
SN54365A	National	DM7095	
	Signetics	S8T95	
SN54366A	National	DM7096	
SN54367A	National	DM7097	
	Signetics	S8T97	
SN54368A	National	DM7098	
	Signetics	S8T98	
SN5437	**Fairchild**	**5437**	**609,616,622,623**
	National	DM5437	
SN5438	National	DM5438	
SN5440	**Fairchild**	**5440**	**609,616,622,623**
	National	DM5440	
◆SN54425	**Fairchild**	**54125**	**616**
	National	DM54125	
		DM7093	
	TI	**SN54125**	**712**
SN5442A	Fairchild	5442A	
	National	DM5442	
	Signetics	5442	
◆SN5443A	Signetics	5443	
SN5445	National	DM5445	
SN5450	National	DM5450	
SN5451	**Fairchild**	**5451**	**616**
	National	DM5451	
SN5453	National	DM5453	
SN5454	National	DM5454	
SN5470	National	DM5470	
SN5472	National	DM5472	
SN5473	**Fairchild**	**5473**	**616**
	National	DM5473	
	Signetics	5473	
SN5474	**Fairchild**	**5474**	**609,616,622,623**
	National	DM5474	
	Signetics	5474	
SN5475	**Fairchild**	**5475**	**616**
	National	DM5475	
	Signetics	5475	
SN5476	**Fairchild**	**5476**	**616**
	National	DM5476	
	Signetics	5476	
◆SN5477	Signetics	5477	
SN5483A	Fairchild	5483A	
	Signetics	5483A	
SN5485	**Fairchild**	**5485**	**616**
	National	DM5485	
	Signetics	5485	
SN5486	**Fairchild**	**5486**	**609,616,622,623**
	National	DM5486	
	Signetics	5486	
SN5496	National	DM5496	
	Signetics	5496	
SN5497	**Fairchild**	**5497**	**616**
SN54ALS00A	Motorola	SN54ALS00	
	National	DM54ALS00	
SN54ALS01	National	DM54ALS01	
SN54ALS02	Motorola	SN54ALS02	
	National	DM54ALS02	
SN54ALS03B	National	DM54ALS03	
SN54ALS04A	Motorola	SN54ALS04	
	National	DM54ALS04	
SN54ALS05A	National	DM54ALS05	
SN54ALS08	Motorola	SN54ALS08	
	National	DM54ALS08	
SN54ALS09	Motorola	SN54ALS09	
	National	DM54ALS09	
SN54ALS1010	National	DM54ALS1010	
SN54ALS1034	National	DM54ALS1034	
SN54ALS109A	National	DM54ALS109	
SN54ALS10A	National	DM54ALS10	
SN54ALS112A	National	DM54ALS112	
SN54ALS113A	National	DM54ALS113	
SN54ALS114A	National	DM54ALS114	
SN54ALS11A	National	DM54ALS11	
SN54ALS12	National	DM54ALS12	
◆SN54ALS1240	National	DM54ALS1240	
◆SN54ALS1241	National	DM54ALS1241	
◆SN54ALS1242	National	DM54ALS1242	
		DM54ALS1243	
◆SN54ALS1243	National	DM54ALS1242	
		DM54ALS1243	
SN54ALS1244A	National	DM54ALS1244	
SN54ALS133	National	DM54ALS133	
SN54ALS137	National	DM54ALS137	
SN54ALS138	National	DM54ALS138	
SN54ALS15	National	DM54ALS15	
SN54ALS151	National	DM54ALS151	
SN54ALS153	National	DM54ALS153	
SN54ALS157	National	DM54ALS157	
SN54ALS158	National	DM54ALS158	
SN54ALS161B	Motorola	SN54ALS161	
	National	DM54ALS161	
SN54ALS162A	Motorola	SN54ALS162	
	National	DM54ALS162	
SN54ALS163A	Motorola	SN54ALS163	
	National	DM54ALS163	
SN54ALS169B	National	DM54ALS169	
SN54ALS174	National	DM54ALS174	
SN54ALS175	National	DM54ALS175	
SN54ALS20A	National	DM54ALS20	
SN54ALS21	National	DM54ALS21	
SN54ALS22B	National	DM54ALS22	
SN54ALS240A	Motorola	SN54ALS240	
	National	DM54ALS240	
SN54ALS242A	Motorola	SN54ALS242	
	National	DM54ALS242	
SN54ALS243A	Motorola	SN54ALS243	
	National	DM54ALS243	
SN54ALS244A	Motorola	SN54ALS244	
	National	DM54ALS244	
SN54ALS245A	Motorola	SN54ALS245	
	National	DM54ALS245	
SN54ALS251	National	DM54ALS251	
SN54ALS253	National	DM54ALS253	
SN54ALS257	National	DM54ALS257	
SN54ALS258	National	DM54ALS258	
SN54ALS27	National	DM54ALS27	
SN54ALS273	Motorola	SN54ALS273	
	National	DM54ALS273	
SN54ALS28A	National	DM54ALS28	
SN54ALS32	Motorola	SN54ALS32	
	National	DM54ALS32	
SN54ALS33A	National	DM54ALS33	
SN54ALS352	National	DM54ALS352	
SN54ALS373	Motorola	SN54ALS373	
	National	DM54ALS373	
SN54ALS374	Motorola	SN54ALS374	
	National	DM54ALS374	
SN54ALS37A	National	DM54ALS37	
SN54ALS38A	National	DM54ALS38	
SN54ALS520	National	DM54ALS520	
SN54ALS533	National	DM54ALS533	
SN54ALS534	National	DM54ALS534	
SN54ALS563	National	DM54ALS563	
SN54ALS564	National	DM54ALS564	
SN54ALS573	Motorola	SN54ALS573	
	National	DM54ALS573	
SN54ALS574	Motorola	SN54ALS574	
	National	DM54ALS574	
SN54ALS576	Motorola	SN54ALS576	
	National	DM54ALS576	
SN54ALS580	Motorola	SN54ALS580	
	National	DM54ALS580	
SN54ALS620A	Motorola	SN54ALS620	
	National	DM54ALS620	
SN54ALS623A	Motorola	SN54ALS623	
	National	DM54ALS623	
SN54ALS640A	Motorola	SN54ALS640	
	National	DM54ALS640	
SN54ALS645A	National	DM54ALS645	
SN54ALS74A	Motorola	SN54ALS74	
	National	DM54ALS74	
SN54ALS804	National	DM54ALS804	
SN54ALS805	National	DM54ALS805	
SN54ALS808	National	DM54ALS808	
SN54ALS832	National	DM54ALS832	
SN54ALS873	Motorola	SN54ALS873	
	National	DM54ALS873	
SN54ALS874	Motorola	SN54ALS874	
	National	DM54ALS874	
SN54ALS876	Motorola	SN54ALS876	
	National	DM54ALS876	
SN54AS00	National	DM54AS00	
SN54AS02	National	DM54AS02	
SN54AS08	National	DM54AS08	
SN54AS10	National	DM54AS10	
SN54AS109	National	DM54AS109	
SN54AS11	National	DM54AS11	
◆SN54AS112	National	DM54AS112	
◆SN54AS113	National	DM54AS113	
◆SN54AS114	National	DM54AS114	
SN54AS157	National	DM54AS157	
SN54AS158	National	DM54AS158	
SN54AS161	National	DM54AS161	
SN54AS163	National	DM54AS163	
SN54AS169	National	DM54AS169	
SN54AS174	National	DM54AS174	
SN54AS181A	National	DM54AS181	
SN54AS20	National	DM54AS20	
SN54AS21	National	DM54AS21	
SN54AS230	National	DM54AS230	
SN54AS231	National	DM54AS231	
SN54AS240	National	DM54AS240	
SN54AS241	National	DM54AS241	
SN54AS242	National	DM54AS242	
SN54AS244	National	DM54AS244	
◆SN54AS251	National	DM54AS251	
SN54AS257	National	DM54AS257	
SN54AS27	National	DM54AS27	
SN54AS30	National	DM54AS30	
SN54AS34	National	DM54AS34	
SN54AS352	National	DM54AS352	
SN54AS373	National	DM54AS373	
SN54AS374	National	DM54AS374	

◆ Discontinued

Bold face device numbers indicate manufacturers data is provided in the IC Master on the pages noted.

Texas Instruments (Cont'd)

Manufacturer Device	Replacement Source	Device	IC Master Page
SN54AS640	National	DM54AS640	
SN54AS645	National	DM54AS645	
SN54AS646	National	DM54AS646	
◆SN54H00	National	DM54H00	
◆SN54H04	National	DM54H04	
◆SN54H10	National	DM54H10	
◆SN54H103	National	DM54H103	
◆SN54H108	National	DM54H108	
◆SN54H11	National	DM54H11	
◆SN54H50	National	DM54H50	
◆SN54H53	National	DM54H53	
◆SN54H74	National	DM54H74	
◆SN54H76	National	DM54H76	
SN54HC08	**Motorola**	**MC54HC08**	1122
	National	MM54HC08	
	RCA	**CD54HC08**	1149
	Signetics	54HC08	
SN54HC10	**Motorola**	**MC54HC10**	1122
	National	MM54HC10	
	RCA	**CD54HC10**	1149
	Signetics	54HC10	
SN54HC107	**Motorola**	**MC54HC107**	1126
	National	MM54HC107	
	RCA	**CD54HC107**	1149
	Signetics	54HC107	
SN54HC109	**Motorola**	**MC54HC109**	1126
	National	MM54HC109	
	RCA	**CD54HC109**	1149
	Signetics	54HC109	
SN54HC11	**Motorola**	**MC54HC11**	1122
	National	MM54HC11	
	RCA	**CD54HC11**	1149
	Signetics	54HC11	
SN54HC112	**Motorola**	**MC54HC112**	1126
	National	MM54HC112	
	RCA	**CD54HC112**	1149
	Signetics	54HC112	
SN54HC133	**Motorola**	**MC54HC133**	1122
	National	MM54HC133	
	RCA	**CD74HC123**	1150
	Signetics	54HC133	
SN54HC137	Motorola	MC54HC137	
	National	MM54HC137	
	RCA	**CD54HC137**	1150
	SSS	SN54HC137	
		SS54HC137	
SN54HC138	**Motorola**	**MC54HC138**	1130
	National	MM54HC138	
	RCA	**CD54HC138**	1150
	Signetics	54HC138	
	SSS	SS54HC138	
SN54HC139	**Motorola**	**MC54HC139**	1130
	National	MM54HC139	
	RCA	**CD54HC139**	1150
	Signetics	54HC139	
	SSS	SS54HC139	
SN54HC14	**Motorola**	**MC54HC14**	1125
	National	MM54HC14	
	RCA	**CD54HC14**	1149
	Signetics	54HC14	
SN54HC151	**Motorola**	**MC54HC151**	1129
	National	MM54HC151	
	RCA	**CD54HC151**	1150
	Signetics	54HC151	
SN54HC153	**Motorola**	**MC54HC153**	1129
	National	MM54HC153	
	RCA	**CD54HC153**	1150
	Signetics	54HC153	
SN54HC157	**Motorola**	**MC54HC157**	1129
	RCA	**CD54HC157**	1150
	Signetics	54HC157	
SN54HC158	**Motorola**	**MC54HC158**	1129
	National	MM54HC158	
	RCA	**CD54HC158**	1150
	Signetics	54HC158	
SN54HC160	**Motorola**	**MC54HC160**	1127
	National	MM54HC160	
	RCA	**CD54HC160**	1150
	Signetics	54HC160	
	Universal	US74HC160	
SN54HC161	**Motorola**	**MC54HC161**	1127
	National	MM54HC161	
	RCA	**CD54HC161**	1150
	Signetics	54HC161	
SN54HC162	**Motorola**	**MC54HC162**	1127
	National	MM54HC162	
	RCA	**CD54HC162**	1150
	Signetics	54HC162	
SN54HC163	**Motorola**	**MC54HC163**	1127
	National	MM54HC163	
		(Continued)	
SN54HC163	**RCA**	**CD54HC163**	1150
	Signetics	54HC163	
SN54HC164	**Motorola**	**MC54HC164**	1128
	National	MM54HC164	
	RCA	**CD54HC164**	1149
	Signetics	54HC164	
SN54HC165	**Motorola**	**MC54HC165**	1128
	National	MM54HC165	
	RCA	**CD54HC165**	1149
	Signetics	54HC165	
SN54HC166	Motorola	MC54HC166	
	RCA	**CD54HC166**	1149
	Signetics	54HC166	
SN54HC173	**Motorola**	**MC54HC173**	1126
	National	MM54HC173	
	RCA	**CD54HC173**	1149
	Signetics	54HC173	
SN54HC174	**Motorola**	**MC54HC174**	1126
	National	MM54HC174	
	RCA	**CD54HC174**	1149
	Signetics	54HC174	
SN54HC175	**Motorola**	**MC54HC175**	1126
	National	MM54HC175	
	RCA	**CD54HC175**	1149
	Signetics	54HC175	
SN54HC191	**RCA**	**CD54HC191**	1150
	Signetics	54HC191	
SN54HC192	**Motorola**	**MC54HC192**	1127
	National	MM54HC192	
	RCA	**CD54HC192**	1150
	Signetics	54HC192	
SN54HC193	**Motorola**	**MC54HC193**	1127
	National	MM54HC193	
	RCA	**CD54HC193**	1150
	Signetics	54HC193	
SN54HC194	**Motorola**	**MC54HC194**	1128
	National	MM54HC194	
	RCA	**CD54HC194**	1149
	Signetics	54HC194	
SN54HC195	**Motorola**	**MC54HC195**	1128
	National	MM54HC195	
	NEC	UPD23C1000	
	RCA	**CD54HC195**	1149
	Signetics	54HC195	
	VTI	**VT231024**	4265
SN54HC20	**Motorola**	**MC54HC20**	1122
	National	MM54HC20	
	RCA	**CD54HC20**	1149
	Signetics	54HC20	
SN54HC237	Motorola	MC54HC237	
	National	MM54HC237	
	RCA	**CD54HC237**	1150
	SSS	SN54HC237	
SN54HC238	**RCA**	**CD54HC238**	1150
	Signetics	54HC238	
	SSS	SS54HC238	
SN54HC239	Motorola	MC54HC239	
SN54HC240	Mitel	MD54HC240	
	Motorola	**MC54HC240**	1124
	National	MM54HC240	
	RCA	**CD54HC240**	1149
	Signetics	54HC240	
	SSS	SS54HC240	
	Supertex	SI54HC240	
SN54HC241	Mitel	MD54HC241	
	Motorola	**MC54HC241**	1124
	National	MM54HC241	
	RCA	**CD54HC241**	1149
	Signetics	54HC241	
	SSS	SS54HC241	
	Supertex	SI54HC241	
SN54HC242	**Motorola**	**MC54HC242**	1124
	National	MM54HC242	
	RCA	**CD54HC242**	1149
	Signetics	54HC242	
SN54HC243	**Motorola**	**MC54HC243**	1124
	National	MM54HC243	
	RCA	**CD54HC243**	1149
	Signetics	54HC243	
SN54HC244	Mitel	MD54HC244	
	Motorola	**MC54HC244**	1124
	National	MM54HC244	
	RCA	**CD54HC244**	1149
	Signetics	54HC244	
	SSS	SS54HC244	
	Supertex	SI54HC244	
	Telmos	TMD54HC244	
SN54HC245	**Motorola**	**MC54HC245**	1124
	National	MM54HC245	
	RCA	**CD54HC245**	1149
	Signetics	54HC245	
	SSS	SS54HC245	
SN54HC251	**Motorola**	**MC54HC251**	1129
	National	MM54HC251	
	RCA	**CD54HC251**	1150
	Signetics	54HC251	
SN54HC253	**Motorola**	**MC54HC253**	1129
	National	MM54HC253	
	RCA	**CD54HC253**	1150
	Signetics	54HC253	
SN54HC257	**Motorola**	**MC54HC257**	1129
	National	MM54HC257	
	RCA	**CD54HC257**	1150
	Signetics	54HC257	
SN54HC259	**Motorola**	**MC54HC259**	1126
	National	MM54HC259	
	RCA	**CD54HC259**	1150
	Signetics	54HC259	
SN54HC266	**Motorola**	**MC54HC266**	1123
	National	MM54HC266	
	RCA	CD54HC266	
	Signetics	54HC266	
SN54HC27	**Motorola**	**MC54HC27**	1122
	National	MM54HC27	
	RCA	**CD54HC27**	1149
	Signetics	54HC27	
SN54HC273	CTI	54HC273	
	Motorola	**MC54HC273**	1126
	RCA	**CD54HC273**	1149
	Signetics	54HC273	
SN54HC280	**Motorola**	**MC54HC280**	1132
	National	MM54HC280	
	RCA	**CD54HC280**	1150
	Signetics	54HC280	
SN54HC30	**Motorola**	**MC54HC30**	1122
	National	MM54HC30	
	RCA	**CD54HC30**	1149
	Signetics	54HC30	
SN54HC32	**Motorola**	**MC54HC32**	1122
	National	MM54HC32	
	RCA	**CD54HC32**	1149
	Signetics	54HC32	
SN54HC366	**Motorola**	**MC54HC366**	1124
	National	MM54HC366	
	RCA	**CD54HC366**	1149
	Signetics	54HC366	
SN54HC367	**Motorola**	**MC54HC367**	1124
	National	MM54HC367	
	RCA	**CD54HC367**	1149
	Signetics	54HC367	
SN54HC368	**Motorola**	**MC54HC368**	1124
	National	MM54HC368	
	RCA	**CD54HC368**	1149
	Signetics	54HC368	
SN54HC373	Mitel	MD54HC373	
	Motorola	**MC54HC373**	1126
	National	MM54HC373	
	RCA	**CD54HC373**	1150
	Signetics	54HC373	
	SSS	SS54HC373	
	Supertex	SI54HC373	
SN54HC374	Mitel	MD54HC374	
	Motorola	**MC54HC374**	1126
	National	MM54HC374	
	RCA	**CD54HC374**	1149
	Signetics	54HC374	
	SSS	SS54HC374	
	Supertex	SI54HC374	
SN54HC377	Motorola	MC54HC377	
	RCA	**CD54HC377**	1149
	Signetics	54HC377	
SN54HC386	Motorola	MC54HC386	
SN54HC390	**Motorola**	**MC54HC390**	1127
	National	MM54HC390	
	RCA	**CD54HC390**	1150
	Signetics	54HC390	
SN54HC393	**Motorola**	**MC54HC393**	1127
	National	MM54GC393	
	RCA	**CD54HC393**	1150
	Signetics	54HC393	
SN54HC4002	**Motorola**	**MC54HC4002**	1123
	National	MM54HC4002	
	RCA	**CD54HC4002**	1149
	Signetics	54HC4002	
SN54HC4020	**Motorola**	**MC54HC4020**	1128
	National	MM54HC4020	
	RCA	**CD54HC4020**	1150
	Signetics	54HC4020	
SN54HC4024	Motorola	MC54HC4024	
	RCA	**CD54HC4024**	1150
	Signetics	54HC4024	
SN54HC4040	**Motorola**	**MC54HC4040**	1128
	National	MM54HC4040	
		(Continued)	
SN54HC4040	**RCA**	**CD54HC4040**	1150
	Signetics	54HC4040	
SN54HC4060	**Motorola**	**MC54HC4060**	1128
	National	MM54HC4060	
	RCA	**CD54HC4060**	1150
	Signetics	54HC4060	
SN54HC42	**Motorola**	**MC54HC42**	1130
	National	MM54HC42	
	RCA	**CD54HC42**	1150
	Signetics	54HC42	
SN54HC533	**Motorola**	**MC54HC533**	1126
	National	MM54HC533	
	RCA	**CD54HC533**	1150
	Signetics	54HC533	
	SSS	SS54HC533	
SN54HC534	**Motorola**	**MC54HC534**	1127
	National	MM54HC534	
	RCA	**CD54HC534**	1149
	Signetics	54HC534	
	SSS	SS54HC534	
SN54HC541	**RCA**	**CD54HC541**	1149
	Signetics	54HC541	
	SSS	SS54HC541	
SN54HC563	National	MM54HC563	
	RCA	**CD54HC563**	1150
	Signetics	54HC563	
	SSS	SS54HC563	
SN54HC574	**Motorola**	**MC54HC574**	1127
	National	MM54HC574	
	RCA	**CD54HC574**	1149
	Signetics	54HC574	
	SSS	SS54HC574	
SN54HC589	Motorola	MC54HC589	
SN54HC590	Motorola	MC54HC590	
SN54HC592	Motorola	MC54HC592	
SN54HC593	Motorola	MC54HC593	
SN54HC640	**Motorola**	**MC54HC640**	1125
	National	MM54HC640	
	RCA	**CD54HC640**	1149
	Signetics	54HC640	
	SSS	SS54HC640	
SN54HC643	**Motorola**	**MC54HC643**	1125
	National	MM54HC643	
	RCA	**CD54HC643**	1149
	Signetics	54HC643	
SN54HC645	National	MM54HC645	
	Signetics	54HC645	
	SSS	SS54HC645	
SN54HC646	**Motorola**	**MC54HC646**	1125
	National	MM54HC646	
	RCA	**CD54HC646**	1149
	Signetics	54HC646	
SN54HC648	**Motorola**	**MC54HC648**	1125
	National	MM54HC648	
	RCA	**CD54HC648**	1149
	Signetics	54HC648	
SN54HC651	Motorola	MC54HC651	
SN54HC652	Motorola	MC54HC652	
SN54HC658	Motorola	MC54HC658	
SN54HC659	Motorola	MC54HC659	
SN54HC664	Motorola	MC54HC664	
SN54HC665	Motorola	MC54HC665	
SN54HC670	**RCA**	**CD54HC670**	1149
	Signetics	54HC670	
SN54HC74	**Motorola**	**MC54HC74**	1126
	National	MM54HC74	
	RCA	**CD54HC74**	1149
	Signetics	54HC74	
SN54HC75	**Motorola**	**MC54HC75**	1126
	National	MM54HC75	
	RCA	**CD54HC75**	1150
	Signetics	54HC75	
SN54HC86	**Motorola**	**MC54HC86**	1123
	National	MM54HC86	
	RCA	**CD54HC86**	1149
	Signetics	54HC86	
SN54HCT137	CTI	54HCT137	
	RCA	**CD54HCT137**	1150
	Supertex	54HCT137	
SN54HCT138	CTI	54HCT138	
	IDT	IDT54HCT138	
	Mitel	MD54HCT138	
	Motorola	MC54HCT138	
	SPI	SP54HCT138	
	Signetics	54HCT138	
	SSS	SS54HCT138	
SN54HCT237	CTI	54HCT237	
	RCA	**CD54HCT237**	1150
	Supertex	54HCT237	
SN54HCT238	CTI	54HCT238	
	RCA	**CD54HCT238**	1150
		(Continued)	

◆ Discontinued

The manufacturers report their devices can be used as direct replacements.
Performance details often differ, so compare the specifications considering your requirements.

Texas Instruments (Cont'd)

Manufacturer Device	Replacement Source	Device	IC Master Page
SN54HCT238	Signetics	54HCT238	
	SSS	SS54HCT238	
SN54HCT240	CTI	54HCT240	
	Mitel	MD54HCT240	
	Motorola	MC54HCT240	
	National	MM54HCT240	
	RCA	**CD54HCT240**	1149
	SPI	SP54HCT240	
	Supertex	SI54HCT240	
SN54HCT241	CTI	54HCT241	
	Mitel	MD54HCT241	
	Motorola	MC54HCT241	
	National	MM54HCT241	
	RCA	**CD54HCT241**	1149
	SPI	SP54HCT241	
	Signetics	54HCT241	
	SSS	SS54HCT241	
	Supertex	SI54HCT241	
SN54HCT244	CTI	54HCT244	
	Mitel	MD54HCT244	
	Motorola	MC54HCT244	
	National	MM54HCT244	
	RCA	**CD54HCT244**	1149
	SPI	SP54HCT244	
	Signetics	54HCT244	
	SSS	SS54HCT244	
	Supertex	SI54HCT244	
SN54HCT245	CTI	54HCT245	
	Mitel	MD54HCT245	
	Motorola	MC54HCT245	
	RCA	**CD54HCT245**	1149
	SPI	SP54HCT245	
	Signetics	54HCT245	
	SSS	SS54HCT245	
SN54HCT373	CTI	54HCT373	
	Mitel	MD54HCT343	
		MD54HCT373	
	Motorola	MC54HCT373	
	National	MM54HCT373	
	RCA	**CD54HCT373**	1150
	SPI	SP54HCT373	
	Signetics	54HCT373	
	SSS	SS54HCT373	
	Supertex	SI54HCT373	
SN54HCT374	CTI	54HCT374	
	Mitel	MD54HCT374	
	Motorola	MC54HCT374	
	National	MM54HCT374	
	RCA	**CD54HCT374**	1149
	SPI	SP54HCT374	
	SSS	SS54HCT374	
	Supertex	SI54HCT374	
SN54HCT540	CTI	54HCT540	
	Mitel	MD54HCT540	
	Motorola	MC54HCT540	
	RCA	**CD54HCT540**	1149
	SPI	SP54HCT540	
	Signetics	54HCT540	
	SSS	SS54HCT540	
SN54HCT541	CTI	54HCT541	
	Mitel	MD54HCT541	
	Motorola	MC54HCT541	
	RCA	**CD54HCT541**	1149
	SPI	SP54HCT541	
	Signetics	54HCT541	
	SSS	SS54HCT541	
SN54HCT651	Motorola	MC54HCT651	
SN54HCT652	Motorola	MC54HCT652	
SN54HCT658	Motorola	MC54HCT658	
SN54HCT659	Motorola	MC54HCT659	
SN54HCT664	Motorola	MC54HCT664	
SN54HCT665	Motorola	MC54HCT665	
◆SN54L02	National	DM54L02	
◆SN54L03	National	DM54L03	
◆SN54L10	National	DM54L10	
◆SN54L157	National	DM71L22	
◆SN54L164	National	DM54L164	
		DM76L70	
◆SN54L51	National	DM54L51	
◆SN54L55	National	DM54L55	
◆SN54L71	National	DM54L71	
◆SN54L72	National	DM54L72	
◆SN54L73	National	DM54L73	
◆SN54L74	National	DM54L74	
◆SN54L75	National	DM54L75	
◆SN54L78	National	DM54L78	
◆SN54L85	National	DM54L85	
◆SN54L86	National	DM54L86	
◆SN54L90	National	DM54L90	
◆SN54L93	National	DM54L93	
◆SN54L95	National	DM54L95	
◆SN54L98	National	DM54L98	
SN54LS00	**Fairchild**	**54LS00**	607,612,621,623
	Motorola	**SN54LS00**	1122
	National	DM54LS00	
	SGS	T54LS00	
	Signetics	54LS00	
SN54LS01	**Motorola**	**SN54LS01**	1122
	National	DM54LS01	
SN54LS02	**Fairchild**	**54LS02**	607,612,621,623
	Motorola	**SN54LS02**	1122
	National	DM54LS02	
	SGS	T54LS02	
	Signetics	54LS02	
SN54LS03	**Fairchild**	**54LS03**	607,612,621,623
	Motorola	**SN54LS03**	1122
	National	DM54LS03	
	SGS	T54LS03	
SN54LS04	**Fairchild**	**54LS04**	607,612,621,623
	Motorola	**SN54LS04**	1124
	National	DM54LS04	
	SGS	T54LS04	
	Signetics	54LS04	
SN54LS05	**Fairchild**	**54LS05**	607,612,621,623
	Motorola	**SN54LS05**	1124
	National	DM54LS05	
	SGS	T54LS05	
SN54LS08	**Fairchild**	**54LS08**	607,612,621,623
	Motorola	**SN54LS08**	1122
	National	DM54LS08	
	SGS	T54LS08	
	Signetics	54LS08	
SN54LS09	**Fairchild**	**54LS09**	612
	Motorola	**SN54LS09**	1122
	National	DM54LS09	
	SGS	T54LS09	
SN54LS10	**Fairchild**	**54LS10**	607,612,621,623
	Motorola	**SN54LS10**	1122
	National	DM54LS10	
	SGS	T54LS10	
	Signetics	54LS10	
SN54LS11	**Fairchild**	**54LS11**	607,612,621,623
	Motorola	**SN54LS11**	1122
	National	DM54LS11	
	SGS	T54LS11	
◆SN54LS114A	**Fairchild**	**54LS114**	608,612,621,623
	SGS	T54LS114	
SN54LS12	**Motorola**	**SN54LS12**	1122
	National	DM54LS12	
SN54LS122	**Motorola**	**SN54LS122**	1131
	National	DM54LS122	
SN54LS123	**Motorola**	**SN54LS123**	1131
	National	DM54LS123	
SN54LS125A	**Fairchild**	**54LS125A**	612
	Motorola	SN54LS125	
		SN54LS125A	1124
	National	DM54LS125	
	SGS	T54LS125	
	Signetics	54LS125A	
SN54LS13	**Fairchild**	**54LS13**	612
	Motorola	**SN54LS13**	1125
	National	DM54LS13	
	SGS	T54LS13	
SN54LS132	**Motorola**	**SN54LS132**	1125
	National	DM54LS132	
	SGS	T54LS132	
	Signetics	54LS132	
SN54LS136	**Fairchild**	**54LS136**	612
	Motorola	**SN54LS136**	1123
	National	DM54LS136	
	SGS	T54LS136	
	Signetics	54LS136	
SN54LS137	**Motorola**	**SN54LS137**	1130
SN54LS138	**Fairchild**	**54LS138**	608,612,621,623
	Motorola	**SN54LS138**	1130
	National	DM54LS138	
	SGS	T54LS138	
	Signetics	54LS138	
SN54LS139A	**Fairchild**	**54LS139**	608,613,621,623
	Motorola	**SN54LS139**	1130
	National	DM54LS139	
SN54LS139A	SGS	T54LS139	
	Signetics	54LS139	
SN54LS14	**Fairchild**	**54LS14**	612
	Motorola	**SN54LS14**	1125
	National	DM54LS14	
	SGS	T54LS14	
	Signetics	54LS14	
SN54LS145	**Motorola**	**SN54LS145**	1130
SN54LS147	**Motorola**	**SN54LS147**	1131
SN54LS148	**Motorola**	**SN54LS148**	1131
SN54LS15	**Fairchild**	**54LS15**	612
	Motorola	**SN54LS15**	1122
	National	DM54LS15	
	SGS	T54LS15	
SN54LS151	**Fairchild**	**54LS151**	608,613,621,623
	Motorola	**SN54LS151**	1129
	National	DM54LS151	
	SGS	T54LS151	
	Signetics	54LS151	
SN54LS153	**Fairchild**	**54LS153**	608,613,621,623
	Motorola	**SN54LS153**	1129
	National	DM54LS153	
	SGS	T54LS153	
	Signetics	54LS153	
SN54LS155A	**Fairchild**	**54LS155**	613
	Motorola	**SN54LS155**	1130
	National	DM54LS155	
	SGS	T54LS155	
SN54LS156	**Fairchild**	**54LS156**	613
	Motorola	**SN54LS156**	1130
	National	DM54LS156	
	SGS	T54LS156	
SN54LS157	**Fairchild**	**54LS157**	608,613,621,623
	Motorola	**SN54LS157**	1129
	National	DM54LS157	
	SGS	T54LS157	
	Signetics	54LS157	
SN54LS158	**Fairchild**	**54LS158**	608,613,621,623
	Motorola	**SN54LS158**	1129
	National	DM54LS158	
	SGS	T54LS158	
	Signetics	54LS158	
SN54LS160A	**Fairchild**	**54LS160A**	613
	Motorola	**SN54LS160A**	1127
	SGS	T54LS160	
	Signetics	54LS160A	
SN54LS161A	Fairchild	54LS161A	
	Motorola	**SN54LS161A**	1127
	National	DM54LS161A	
	SGS	T54LS161	
	Signetics	54LS161A	
SN54LS162A	**Fairchild**	**54LS162A**	613
	Motorola	**SN54LS162A**	1127
	National	DM54LS162A	
	SGS	T54LS162	
	Signetics	54LS162A	
SN54LS163A	**Fairchild**	**54LS163A**	613
	Motorola	**SN54LS163A**	1127
	National	DM54LS163	
		DM54LS163A	
	SGS	T54LS163	
	Signetics	54LS163A	
SN54LS164	**Fairchild**	**54LS164**	613
	Motorola	**SN54LS164**	1128
	National	DM54LS164	
	SGS	T54LS164	
	Signetics	54LS164	
SN54LS165A	**Fairchild**	**54LS165**	613
	Motorola	**SN54LS165**	1128
SN54LS166A	**Motorola**	**SN54LS166**	1128
◆SN54LS168	**Fairchild**	**54LS168**	613
	Motorola	**SN54LS168**	1127
	National	DM54LS168	
	SGS	T54LS168	
SN54LS169B	**Fairchild**	**54LS169**	613
	Motorola	**SN54LS169**	1127
	National	DM54LS169	
	SGS	T54LS169	
SN54LS170	**Fairchild**	**54LS170**	613
	National	DM54LS170	
	SGS	T54LS170	
SN54LS173A	Fairchild	54LS173	
	Motorola	**SN54LS173A**	1126
	National	DM54LS173	
	Signetics	54LS173	
SN54LS174	**Fairchild**	**54LS174**	608,613,621,623
	Motorola	**SN54LS174**	1126
SN54LS174	National	DM54LS174	
	SGS	T54LS174	
	Signetics	54LS174	
SN54LS175	**Fairchild**	**54LS175**	608,613,621,623
	Motorola	**SN54LS175**	1126
	National	DM54LS175	
	SGS	T54LS175	
	Signetics	54LS175	
SN54LS181	**Fairchild**	**54LS181**	613
	Motorola	**SN54LS181**	1132
	SGS	T54LS181	
	Signetics	54LS181	
SN54LS190	**Motorola**	**SN54LS190**	1127
	National	DM54LS190	
	SGS	T54LS190	
	Signetics	54LS190	
SN54LS191	**Motorola**	**SN54LS191**	1127
	National	DM54LS191	
	SGS	T54LS191	
	Signetics	54LS191	
SN54LS192	**Fairchild**	**54LS192**	613
	Motorola	**SN54LS192**	1127
	National	DM54LS192	
	Raytheon	54LS192	
	SGS	T54LS192	
	Signetics	54LS192	
SN54LS193	**Fairchild**	**54LS193**	608,613,621,623
	Motorola	**SN54LS193**	1127
	National	DM54LS193	
	SGS	T54LS193	
	Signetics	54LS193	
SN54LS194A	**Fairchild**	**54LS194A**	608,613,621,623
	Motorola	**SN54LS194A**	1128
	SGS	T54LS194	
SN54LS195A	**Fairchild**	**54LS195A**	613
	Motorola	**SN54LS195A**	1128
	SGS	T54LS195	
	Signetics	54LS195A	
SN54LS196	**Motorola**	**SN54LS196**	1127
	National	DM54LS196	
	SGS	T54LS196	
SN54LS197	**Motorola**	**SN54LS197**	1127
	National	DM54LS197	
	SGS	T54LS197	
	Signetics	54LS197	
SN54LS20	**Fairchild**	**54LS20**	608,612,621,623
	Motorola	**SN54LS20**	1122
	National	DM54LS20	
	SGS	T54LS20	
	Signetics	54LS20	
SN54LS21	**Fairchild**	**54LS21**	608,612,621,623
	Motorola	**SN54LS21**	1122
	National	DM54LS21	
	SGS	T54LS21	
SN54LS22	**Fairchild**	**54LS22**	608,612,621,623
	Motorola	**SN54LS22**	1122
	National	DM54LS22	
	SGS	T54LS22	
SN54LS221	**Motorola**	**SN54LS221**	1131
	National	DM54LS221	
	Signetics	54LS221	
SN54LS240	**Fairchild**	**54LS240**	608,613,621,623
	MMI	SN54LS240	
	Motorola	**SN54LS240**	1124
	SGS	T54LS240	
SN54LS241	**Fairchild**	**54LS241**	613
	MMI	SN54LS241	
	Motorola	**SN54LS241**	1124
	SGS	T54LS241	
SN54LS242	**Motorola**	**SN54LS242**	1124
SN54LS243	**Motorola**	**SN54LS243**	1124
SN54LS244	**Fairchild**	**54LS244**	613
	MMI	SN54LS244	
	Motorola	**SN54LS244**	1124
	SGS	T54LS244	
SN54LS245	**Fairchild**	**54LS245**	613
	MMI	SN54LS245	
	Motorola	**SN54LS245**	1124
	National	DM54LS245	
	Signetics	54LS245	
SN54LS247	**Fairchild**	**54LS247**	613
	Motorola	**SN54LS247**	1130
	National	DM54LS247	
SN54LS248	**Fairchild**	**54LS248**	613
	Motorola	**SN54LS248**	1130

(Continued)

◆ Discontinued

Bold face device numbers indicate manufacturers data is provided in the IC Master on the pages noted.

Texas Instruments (Cont'd)

Manufacturer Device	Replacement Source	Device	IC Master Page
SN54LS248	National	DM54LS248	
	Signetics	54LS248	
SN54LS249	**Fairchild**	**54LS249**	**613**
	Motorola	**SN54LS249**	**1130**
	National	DM54LS249	
SN54LS251	**Fairchild**	**54LS251**	**613**
	Motorola	**SN54LS251**	**1129**
	SGS	T54LS251	
	Signetics	54LS251	
SN54LS253	**Fairchild**	**54LS253**	**608,613,621,623**
	Motorola	**SN54LS253**	**1129**
	National	DM54LS253	
		DM7214	
	SGS	T54LS253	
	Signetics	54LS253	
SN54LS257B	**Motorola**	**SN54LS257A**	**1129**
SN54LS258B	**Fairchild**	**54LS258A**	**608,614,622,623**
	Motorola	**SN54LS258A**	**1129**
SN54LS259B	**Fairchild**	**54LS259**	**614**
	Motorola	**SN54LS259**	**1126**
	SGS	T54LS259	
SN54LS26	**Fairchild**	**54LS26**	**612**
	Motorola	**SN54LS26**	**1122**
	National	DM54LS26	
	SGS	T54LS26	
SN54LS266	**Fairchild**	**54LS266**	**608,614,622,623**
	Motorola	**SN54LS266**	**1123**
	National	DM54LS266	
	SGS	T54LS266	
	Signetics	54LS266	
SN54LS27	**Fairchild**	**54LS27**	**608,612,621,623**
	Motorola	**SN54LS27**	**1122**
	National	DM54LS27	
	SGS	T54LS27	
SN54LS273	**Fairchild**	**54LS273**	**614**
	MMI	SN54LS273	
	Motorola	**SN54LS273**	**1125**
	SGS	T54LS273	
	Signetics	54LS273	
SN54LS279	**Fairchild**	**54LS279**	**608,614,622,623**
	Motorola	**SN54LS279**	**1126**
	National	DM54LS279	
	SGS	T54LS279	
	Signetics	54LS279	
SN54LS28	**Fairchild**	**54LS28**	**612**
	Motorola	**SN54LS28**	**1122**
	SGS	T54LS28	
	Signetics	54LS194A	
		54LS28	
SN54LS280	**Motorola**	**SN54LS280**	**1132**
	SGS	T54LS280	
SN54LS283	**Fairchild**	**54LS283**	**608,614,622,623**
	Motorola	**SN54LS283**	**1132**
	National	DM54LS283	
	SGS	T54LS283	
	Signetics	54LS283	
SN54LS290	**Motorola**	**SN54LS290**	**1127**
	National	DM54LS290	
	SGS	T54LS290	
	Signetics	54LS290	
SN54LS293	**Motorola**	**SN54LS293**	**1127**
	National	DM54LS293	
	SGS	T54LS293	
	Signetics	54LS293	
SN54LS295B	**Fairchild**	**54LS295A**	**614**
	Motorola	**SN54LS295A**	**1129**
	SGS	T54LS295	
SN54LS30	**Fairchild**	**54LS30**	**608,612,621,623**
	Motorola	**SN54LS30**	**1122**
	National	DM54LS30	
	SGS	T54LS30	
	Signetics	54LS30	
SN54LS32	**Fairchild**	**54LS32**	**608,612,621,623**
	Motorola	**SN54LS32**	**1122**
	National	DM54LS32	
	SGS	T54LS32	
	Signetics	54LS32	
SN54LS322A	**Fairchild**	**54LS322**	**614**
SN54LS323	AMD	SN74LS323	
	Fairchild	**54LS323**	**614**
		74LS323	**5311**
	Motorola	**SN74LS323**	**1129**
	TI	SN74LS323	
SN54LS33	**Fairchild**	**54LS33**	**612**
	Motorola	**SN54LS33**	**1122**
	SGS	T54LS33	
SN54LS347	**Fairchild**	**54LS347**	**614**
SN54LS352	**Fairchild**	**54LS352**	**614**
	Motorola	**SN54LS352**	**1129**
	National	DM54LS352	
	SGS	T54LS352	
SN54LS353	**Fairchild**	**54LS353**	**614**
	Motorola	**SN54LS353**	**1129**
	National	DM54LS353	
	SGS	T54LS353	
		T54LS354	
SN54LS365A	Fairchild	54LS365A	
	Motorola	**SN54LS365A**	**1124**
	SGS	T54LS365	
	Signetics	54LS365	
		54LS365A	
SN54LS366A	Fairchild	54LS366A	
	Motorola	SN54LS366A	
	National	DM54LS366	
	SGS	T54LS366	
	Signetics	54LS366A	
SN54LS367A	Fairchild	54LS367A	
	Motorola	**SN54LS367A**	**1124**
	National	DM54LS367	
	SGS	T54LS367	
	Signetics	54LS367	
		54LS367A	
SN54LS368A	Fairchild	54LS368A	
	Motorola	**SN54LS368A**	**1124**
	National	DM54LS368	
	SGS	T54LS368	
	Signetics	54LS368	
		54LS368A	
SN54LS37	**Fairchild**	**54LS37**	**612**
	Motorola	**SN54LS37**	**1122**
	National	DM54LS37	
	SGS	T54LS37	
	Signetics	54LS37	
SN54LS373	MMI	SN54LS373	
	Motorola	**SN54LS373**	**1126**
	SGS	T54LS373	
	Signetics	54LS373	
SN54LS374	**Fairchild**	**54LS374**	**614**
	MMI	SN54LS374	
	Motorola	**SN54LS374**	**1126**
	National	DM54LS374	
	SGS	T54LS374	
SN54LS375	**Fairchild**	**54LS375**	**614**
	Motorola	**SN54LS375**	**1126**
	Signetics	54LS375	
SN54LS377	**Fairchild**	**54LS377**	**614**
	MMI	SN54LS377	
	Motorola	**SN54LS377**	**1126**
	SGS	T54LS377	
	Signetics	54LS377	
SN54LS38	**Fairchild**	**54LS38**	**612**
	Motorola	**SN54LS38**	**1122**
	National	DM54LS38	
	SGS	T54LS38	
SN54LS386	**Motorola**	**SN54LS386**	**1123**
	National	DM54LS386	
	Raytheon	RM8241	
	Signetics	S82S41	
SN54LS390	**Motorola**	**SN54LS390**	**1127**
	SGS	T54LS390	
SN54LS393	**Motorola**	**SN54LS393**	**1127**
	SGS	T54LS393	
SN54LS398	**Motorola**	**SN54LS398**	**1129**
SN54LS399	SGS	TS4LS393	
SN54LS40	**Fairchild**	**54LS40**	**612**
	Motorola	**SN54LS40**	**1122**
	National	DM54LS40	
	SGS	T54LS40	
SN54LS42	**Fairchild**	**54LS42**	**608,612,621,623**
	Motorola	**SN54LS42**	**1130**
	National	DM54LS42	
	SGS	T54LS42	
	Signetics	54LS42	
SN54LS47	**Fairchild**	**54LS47**	**612**
	Motorola	**SN54LS47**	**1130**
	National	DM54LS47	
SN54LS48	**Fairchild**	**54LS48**	**612**
	Motorola	**SN54LS48**	**1130,1131**
	National	DM54LS48	
SN54LS49	**Fairchild**	**54LS49**	**612**
	Motorola	**SN54LS49**	**1130**
	National	DM54LS49	
SN54LS490	**Fairchild**	**54LS490**	**614**
	Motorola	**SN54LS490**	**1127**
	SGS	T54LS490	
SN54LS51	**Fairchild**	**54LS51**	**608,612,621,623**
	Motorola	**SN54LS51**	**1123**
	National	DM54LS51	
	SGS	T54LS51	
	Signetics	54LS51	
SN54LS54	**Fairchild**	**54LS54**	**608,612,621,623**
	Motorola	**SN54LS54**	**1123**
	National	DM54LS54	
	SGS	T54LS54	
SN54LS540	**Motorola**	**SN54LS540**	**1125**
SN54LS623	**Motorola**	**SN54LS623**	**1125**
SN54LS640	**Motorola**	**SN54LS640**	**1125**
SN54LS641	**Motorola**	**SN54LS641**	**1125**
SN54LS642	**Motorola**	**SN54LS642**	**1125**
SN54LS644	**Motorola**	**SN54LS644**	**1125**
SN54LS645	MMI	SN54LS645	
	Motorola	**SN54LS645**	**1125**
SN54LS668	**Motorola**	**SN54LS668**	**1127**
SN54LS669	**Motorola**	**SN54LS669**	**1127**
SN54LS670	**Fairchild**	**54LS670**	**614**
	Motorola	**SN54LS670**	**1128**
	National	DM54LS670	
	SGS	T54LS670	
	Signetics	54LS670	
SN54LS673	**Motorola**	**SN54LS673**	**1129**
SN54LS674	**Motorola**	**SN54LS674**	**1129**
SN54LS73A	**Motorola**	**SN54LS73A**	**1126**
	National	DM54LS73	
		DM54LS73A	
	Signetics	54LS73	
SN54LS74A	**Fairchild**	**54LS74**	**608,612,621,623**
	Motorola	**SN54LS74A**	**1126**
	National	DM54LS74	
		DM54LS74A	
	SGS	T54LS74	
	Signetics	54LS74	
SN54LS75	**Motorola**	**SN54LS75**	**1126**
	National	DM54LS75	
	Signetics	54LS75	
SN54LS76A	**Motorola**	**SN54LS76A**	**1126**
	National	DM54LS76	
	Signetics	54LS76	
◆SN54LS77	**Motorola**	**SN54LS77**	**1126**
	National	DM54LS77	
SN54LS78A	**Motorola**	**SN54LS78A**	**1126**
	National	DM54LS78	
SN54LS83A	**Fairchild**	**54LS83A**	**608,612,621,623**
	Motorola	**SN54LS83A**	**1132**
	National	DM54LS83A	
	SGS	T54LS83	
	Signetics	54LS83	
		54LS83A	
SN54LS85	**Fairchild**	**54LS85**	**608,612,621,623**
	Motorola	**SN54LS85**	**1131**
	National	DM54LS85	
	Signetics	54LS85	
SN54LS86A	**Motorola**	**SN54LS86**	**1123**
	National	DM54LS86	
	SGS	T54LS86	
	Signetics	54LS86	
SN54LS90	**Motorola**	**SN54LS90**	**1127**
	National	DM54LS90	
	SGS	T54LS90	
	Signetics	54LS90	
SN54LS91	**Motorola**	**SN54LS91**	**1128**
SN54LS92	**Motorola**	**SN54LS92**	**1127**
	National	DM54LS92	
	SGS	T54LS92	
	Signetics	54LS92	
SN54LS93	**Motorola**	**SN54LS93**	**1127**
	National	DM54LS93	
	SGS	T54LS93	
	Signetics	54LS93	
SN54LS95B	**Fairchild**	**54LS95B**	**608,612,621,623**
	Motorola	**SN54LS95B**	**1128**
	National	DM54LS95B	
	SGS	T54LS95	
	Signetics	54LS95B	
SN54LS96	Signetics	54LS96	
SN54PL16R4	AMD	AMPAL16R4	
	MMI	PAL16R4A	
	National	PAL16R4	
SN54PL16R6	AMD	AMPAL16R6	
	MMI	PAL16R6A	
	National	PAL16R6	
SN54S00	Signetics	54S00	
SN54S02	Signetics	54S02	
SN54S04	Signetics	54S04	
SN54S08	Signetics	54S08	
SN54S11	Signetics	54S11	
SN54S140	National	DM54S140	
	Signetics	54S140	
SN54S182	MMI	SN54S182	
SN54S22	National	DM54S22	
SN54S260	Signetics	54S260	
SN54S283	MMI	54S283	
SN54S37	Signetics	54S37	
SN54S373	MMI	SN54S373	
SN54S374	MMI	SN54S374	
SN54S381	**MMI**	**SN54S381**	**1103**
SN54S85	Signetics	54S85	
SN54S86	Signetics	54S86	
SN55107A	Motorola	MC55107	
	National	DS55107	
		LM55107A	
	TI	**SN55107B**	**721**
SN55108A	Fairchild	55108	
	Motorola	MC55108	
	National	DS55108	
		LM55108A	
	TI	**SN55108B**	**721**
SN55114	Fairchild	96114	
	TI	SN75114	
SN55115	Fairchild	96115	
	TI	SN75115	
SN55121	National	DS55121	
	Signetics	S8T13	
SN55122	National	DS55122	
◆SN55123	Fairchild	SH123	
		UA138	
		μA123	
	IPS	**IP123**	**3599**
	LinearTech	LM123	
	Motorola	**LM123**	**3622**
		MC78T05	**3622**
	National	LM123	
	SiliconG	SG123	
SN55180	National	DM7800	
SN55182	AD	AD7820	
	National	DS7820	
SN55183	National	DS7830	
SN5520	National	LM5520	
SN5522	Motorola	MC5522	
		MC5523	
	National	LM5522	
SN5524	Fairchild	MC5524	
	Motorola	MC5524	
	National	LM5524	
	Raytheon	RM5524	
◆SN5528	Fairchild	MC5528	
	Motorola	MC5528	
	National	LM5528	
SN55325	Motorola	MC55325	
	National	DS55325	
	SiliconG	SG55325	
SN55326	SiliconG	SG55326	
SN55327	Motorola	MC75325	
	National	DS75325	
	SiliconG	SG55327	
		SG75325	
	TI	SN75325	
◆SN5535	Motorola	MC5535	
	National	LM5535	
SN55365	National	DS55365	
SN55450	Signetics	55450	
	SiliconG	SG55450	
SN55451	Fairchild	55451	
	National	DS55451	
	Signetics	55451	
	SiliconG	SG55451	
SN55452	National	DS55452	
	Signetics	55452	
	SiliconG	SG55452	
SN55453	Fairchild	55453	
	National	DS55453	
		LM55453	
	Signetics	55453	
	SiliconG	SG55453	
SN55454	National	DS55454	
	Signetics	55454	
	SiliconG	SG55454	
◆SN55460	National	DS55460	
	SiliconG	SG55460	

◆ Discontinued

The manufacturers report their devices can be used as direct replacements.
Performance details often differ, so compare the specifications considering your requirements.

Texas Instruments (Cont'd)

Manufacturer Device	Replacement Source	Device	IC Master Page
SN55461	National	DS55461	
	SiliconG	SG55461	
SN55462	National	DS55462	
	SiliconG	SG55462	
SN55463	National	DS55463	
	SiliconG	SG55463	
SN55464	National	DS55464	
	SiliconG	SG55464	
SN55471	SiliconG	SG55471	
SN55472	SiliconG	SG55472	
SN55473	SiliconG	SG55473	
SN55474	SiliconG	SG55474	
SN72748P	National	LM748	
	SGS	LM748	
		LS148	
	SiliconG	SG201	
	TI	LM201	
		μA748	
	ThomsonCSF	LM201	
		LM748	
SN7400	Fairchild	7400	
	National	DM7400	
	Signetics	**7400**	**1156**
	Toshiba	TC7400	
SN7401	Fairchild	7401	
	National	DM7401	
SN7402	Fairchild	7402	
	National	DM7402	
	Signetics	**7402**	**1156**
SN7403	Fairchild	7403	
	National	DM7403	
	Signetics	**7403**	**1156**
SN7404	Fairchild	7404	
	National	DM7404	
	Signetics	**7404**	**1156**
	Toshiba	TC7404	
SN7405	Fairchild	7405	
	National	DM7405	
	Signetics	**7405**	**1156**
SN7406	Fairchild	7406	
	National	DM7406	
	Signetics	**7406**	**1156**
SN7407	Fairchild	7407	
	Hitachi	HD7407	
	National	DM7407	
	Signetics	**7407**	**1156**
SN7408	Fairchild	7408	
	National	DM7408	
	Signetics	**7408**	**1156**
SN7409	Fairchild	7409	
	National	DM7409	
SN7410	Fairchild	7410	
	National	DM7410	
	Signetics	**7410**	**1156**
	Toshiba	TC7410	
SN74107	Fairchild	74107	
	National	DM74107	
	Signetics	**74107**	**1156**
SN74109	National	DM74109	
	Signetics	**74109**	**1156**
SN74116	**Signetics**	**74116**	**1156**
SN7412	Fairchild	7412	
SN74121	Fairchild	74121	
	National	DM74121	
	Signetics	**74121**	**1157**
SN74122	Fairchild	74122	
		9601	
	National	DM8601	
		DM9601	
	Raytheon	RF8601	
		RF9601	
	Signetics	**N8T22**	**1175**
		S8T22	
SN74123	Fairchild	74123	
	National	DM74123	
	Signetics	**74123**	**1157**
SN74125	Fairchild	74125	
	National	DM74125	
		DM8093	
	Signetics	**74125**	**1157**
	TI	SN74425	
SN74126	Fairchild	74126	
	National	DM74126	
		DM8094	
	Signetics	**74126**	**1157**
	TI	SN74426	
SN74128	**Signetics**	**74128**	**1157**
SN7413	Fairchild	7413	
	National	DM7413	
	Signetics	**7413**	**1156**

Manufacturer Device	Replacement Source	Device	IC Master Page
SN74132	Fairchild	74132	
	National	DM74132	
	Signetics	**74132**	**1157**
SN74136	Fairchild	74136	
SN7414	Fairchild	7414	
	National	DM7414	
	Signetics	**7414**	**1156**
SN74141	Fairchild	74141	
		93141	
	Hitachi	HD7441	
	National	DM74141	
		DM7441	
	Signetics	74141	
		7441	
SN74145	Fairchild	74145	
	National	DM74145	
	Signetics	**74145**	**1157**
SN74147	Motorola	MC14508	
	National	DM74147	
	RCA	CD4508	
	SGS	HCC/HCF4508	
	Signetics	**74147**	**1157**
		HEF4508	
		N82147	
	Solitron	CM4508	
	SSS	SCL4508	
	Toshiba	TC4508	
SN74148	National	DM74148	
		DM8318	
	Signetics	**74148**	**1157**
		N82148	
SN74150	Fairchild	74150	
	National	DM74150	
	Signetics	**74150**	**1157**
SN74153	Fairchild	74153	
	National	DM74153	
	Signetics	**74153**	**1157**
SN74155	Fairchild	74155	
	National	DM74155	
	Signetics	**74155**	**1157**
SN74156	Fairchild	74156	
	National	DM74156	
	Signetics	**74156**	**1157**
SN74157	National	DM74157	
	Signetics	**74157**	**1157**
SN74159	Fairchild	74159	
SN7416	Fairchild	7416	
	National	DM7416	
	Signetics	**7416**	**1156**
SN74160	Fairchild	74160	
	National	DM74160	
	Signetics	**74160**	**1157**
SN74161	Fairchild	74161	
	National	DM74161	
	Signetics	**74161**	**1157**
SN74162	Fairchild	74162	
	National	DM74162	
SN74163	Fairchild	74163	
	National	DM74163	
	Signetics	**74163**	**1157**
SN74165	Fairchild	74165	
	National	DM74165	
		DM8590	
	Signetics	**74165**	**1157**
SN74166	Fairchild	74166	
	National	DM74166	
	Signetics	**74166**	**1157**
SN7417	Fairchild	7417	
	National	DM7417	
	Signetics	**7417**	**1156**
SN74170	Fairchild	74170	
	Hitachi	HD74170	
	National	DM74170	
	Signetics	**74170**	**1157**
SN74172	Signetics	74172	
SN74173	Fairchild	74173	
	National	DM74173	
		DM8551	
	Raytheon	RC8T10	
	Signetics	**N8T10**	**1175**
SN74174	Fairchild	74174	
	National	DM74174	
	Signetics	**74174**	**1157**
SN74175	Fairchild	74175	
	National	DM74175	
	Signetics	**74175**	**1157**
SN74176	Fairchild	74176	
		96176	
	National	DM74176	
		DM8280	
	Raytheon	RC8280	
	Signetics	74176	

Manufacturer Device	Replacement Source	Device	IC Master Page
SN74177	Fairchild	74177	
	National	DM74177	
		DM8281	
	Raytheon	RC8281	
	Signetics	74177	
SN74178	Raytheon	RC8270	
SN74179	Fairchild	74179	
	Raytheon	RC8271	
	Signetics	**N8271**	**1175**
SN74180	Fairchild	74180	
	National	DM74180	
	Signetics	**74180**	**1157**
SN74181	Hitachi	HD74181	
	National	DM74181	
	Raytheon	RC9341	
	Signetics	**74181**	**1157**
SN74182	National	DM74182	
SN74184	National	DM74184	
SN74185A	National	DM74185A	
SN74190	Fairchild	74190	
	National	DM74190	
	Signetics	**74190**	**1157**
SN74191	Fairchild	74191	
	National	DM74191	
	Signetics	**74191**	**1157**
SN74192	Fairchild	74192	
	National	DM74192	
		DM8560	
	Raytheon	RC9360	
	Signetics	**74192**	**1157**
SN74194	Fairchild	74194	
	National	DM74194	
	Signetics	**74194**	**1157**
SN74195	Fairchild	74195	
	National	DM74195	
	Signetics	**74195**	**1157**
SN74196	Fairchild	74196	
	National	DM74196	
		DM8290	
	Raytheon	RC8290	
	Signetics	74196	
SN74197	Fairchild	74197	
	National	DM74197	
		DM8291	
	Raytheon	RC8291	
	Signetics	74197	
SN74198	Fairchild	74198	
	National	DM74198	
	Signetics	74198	
SN74199	Fairchild	74199	
	National	DM74199	
	Signetics	**74199**	**1157**
SN7420	Fairchild	7420	
		9004	
	National	DM7420	
		DM9004C	
	Signetics	**7420**	**1156**
	Toshiba	TC7420	
SN7422	Fairchild	7422	
SN74221	**Signetics**	**74221**	**1157**
SN7423	Fairchild	7423	
	National	DM7423	
SN7425	Fairchild	7425	
	National	DM7425	
SN74251	National	DM74251	
		DM8121	
SN7426	Fairchild	7426	
	National	DM7426	
		DM8810	
	Signetics	**7426**	**1156**
SN7427	Fairchild	7427	
	National	DM7427	
	Signetics	**7427**	**1156**
SN74279	Fairchild	74279	
	Signetics	**74279**	**1158**
SN7428	**Signetics**	**7428**	**1156**
SN74283	Fairchild	74283	
SN74284	National	DM8875A	
SN74285	National	DM8875B	
SN74290	Fairchild	74290	
SN74293	Fairchild	74293	
SN74298	Fairchild	74298	
	Signetics	**74298**	**1158**
SN7430	Fairchild	7430	
	National	DM7430	
	Signetics	**7430**	**1156**
SN7432	Fairchild	7432	
	National	DM7432	
	Signetics	**7432**	**1156**
SN7433	**Signetics**	**7433**	**1156**
SN74365	**Motorola**	**MC6885**	**3209**
		MC8T95	**3209**

(Continued)

Manufacturer Device	Replacement Source	Device	IC Master Page
SN74365	National	DM8095	
	Signetics	**N8T95**	**1175**
SN74365A	Signetics	74365A	
	TI	SN74366A	
SN74366A	Signetics	74365A	
	TI	SN74365A	
SN74367A	Signetics	74367A	
SN74368A	Signetics	74368A	
SN7437	Fairchild	7437	
	National	DM7437	
	Signetics	**7437**	**1156**
SN7438	Fairchild	7438	
	National	DM7438	
	Signetics	**7438**	**1156**
SN7440	Fairchild	7440	
	National	DM7440	
	Signetics	**7440**	**1156**
SN74425	Fairchild	74125	
	National	DM74125	
		DM8093	
	Signetics	**74125**	**1157**
	TI	SN74125	
SN74426	Fairchild	74126	
	National	DM74126	
		DM8094	
	Signetics	**74126**	**1157**
	TI	SN74126	
SN7443	TI	SN7443A	
SN7443A	TI	SN7443	
SN7445	Fairchild	7445	
	National	DM7445	
	Signetics	**7445**	**1156**
SN7450	Fairchild	7450	
	National	DM7450	
	Signetics	**7450**	**1156**
SN7451	Fairchild	7451	
	Hitachi	HD7451	
	National	DM7451	
	Signetics	**7451**	**1156**
SN7453	Fairchild	7453	
	National	DM7453	
SN7454	Fairchild	7454	
	National	DM7454	
SN7460	Fairchild	7460	
	National	DM7460	
SN7470	Fairchild	7470	
	Hitachi	HD7470	
	National	DM7470	
SN7472	Fairchild	7472	
	National	DM7472	
SN7473	Fairchild	7473	
	National	DM7473	
	Signetics	**7473**	**1156**
SN7474	Fairchild	7474	
	National	DM7474	
	Signetics	**7474**	**1156**
SN7475	Fairchild	7475	
	National	DM7475	
	Signetics	**7475**	**1156**
SN7476	Fairchild	7476	
	National	DM7476	
	Signetics	**7476**	**1156**
SN7482	Hitachi	HD7482	
	National	DM7482	
SN7485	Fairchild	7485	
	National	DM7485	
	Signetics	**7485**	**1156**
SN7486	Fairchild	7486	
	National	DM7486	
	Signetics	**7486**	**1156**
SN7494	Fairchild	7494	
	Hitachi	HD7494	
	Signetics	**7494**	**1156**
SN7496	Fairchild	7496	
	National	DM7496	
	Signetics	**7496**	**1156**
SN7497	Fairchild	7497	
SN74ALS00A	Motorola	SN74ALS00	
	National	DM74ALS00	
SN74ALS01	National	DM74ALS01	
SN74ALS02	Motorola	SN74ALS02	
	National	DM74ALS02	
SN74ALS03A	National	DM74ALS03	
SN74ALS04A	Motorola	SN74ALS04	
	National	DM74ALS04	
SN74ALS05A	National	DM74ALS05	
SN74ALS08	Motorola	SN74ALS08	
	National	DM74ALS08	
SN74ALS09	Motorola	SN74ALS09	
	National	DM74ALS09	
SN74ALS10	National	DM74ALS10	
SN74ALS1000A	National	DM74ALS1000	

◆ Discontinued

Bold face device numbers indicate manufacturers data is provided in the IC Master on the pages noted.

ALTERNATE SOURCE DIRECTORY

Texas Instruments (Cont'd)

Manufacturer Device	Replacement Source	Device	IC Master Page
SN74ALS1002A	National	DM74ALS1002	
SN74ALS1003A	National	DM74ALS1003	
SN74ALS1004	National	DM74ALS1004	
SN74ALS1005	National	DM74ALS1005	
SN74ALS1008A	National	DM74ALS1008	
SN74ALS1010A	National	DM74ALS1010	
SN74ALS1011A	National	DM74ALS1011	
SN74ALS1020A	National	DM74ALS1020	
SN74ALS1032A	National	DM74ALS1032	
SN74ALS1034	National	DM74ALS1034	
SN74ALS1035	National	DM74ALS1035	
SN74ALS109A	National	DM74ALS109	
SN74ALS112A	National	DM74ALS112	
SN74ALS113A	National	DM74ALS113	
SN74ALS114A	National	DM74ALS114	
SN74ALS11A	National	DM74ALS11	
◆SN74ALS1240	National	DM74ALS1240	
SN74ALS1242	National	DM74ALS1242	
SN74ALS1243	National	DM74ALS1243	
SN74ALS1244A	National	DM74ALS1244	
SN74ALS1245A	National	DM74ALS1245	
SN74ALS12A	National	DM74ALS12	
SN74ALS131	National	DM74ALS131	
SN74ALS133	National	DM74ALS133	
SN74ALS136	National	DM74ALS136	
SN74ALS137	National	DM74ALS137	
SN74ALS138	National	DM74ALS138	
SN74ALS151	National	DM74ALS151	
SN74ALS153	National	DM74ALS153	
SN74ALS15A	National	DM74ALS15	
SN74ALS160A	Motorola	SN74ALS160	
	National	DM74ALS160	
SN74ALS161A	Motorola	SN74ALS161	
	National	DM74ALS161	
SN74ALS1621	National	DM74ALS1621	
SN74ALS162A	Motorola	SN74ALS162	
	National	DM74ALS162	
SN74ALS163A	Motorola	SN74ALS163	
	National	DM74ALS163	
SN74ALS1640A	National	DM74ALS1640	
SN74ALS168B	National	DM74ALS168	
SN74ALS169B	National	DM74ALS169	
SN74ALS174	National	DM74ALS174	
SN74ALS175	National	DM74ALS175	
SN74ALS190	National	DM74ALS190	
SN74ALS191	National	DM74ALS191	
SN74ALS192	Motorola	SN74ALS192	
	National	DM74ALS192	
SN74ALS193	Motorola	SN74ALS193	
	National	DM74ALS193	
SN74ALS20A	National	DM74ALS20	
SN74ALS21	National	DM74ALS21	
SN74ALS22B	National	DM74ALS22	
SN74ALS240A	Motorola	SN74ALS240	
	National	DM74ALS240	
SN74ALS241A	Motorola	SN74ALS241	
	National	DM74ALS241	
SN74ALS242	Motorola	SN74ALS242	
	National	DM74ALS242	
SN74ALS243A	Motorola	SN74ALS243	
	National	DM74ALS243	
SN74ALS244A	Motorola	SN74ALS244	
	National	DM74ALS244	
SN74ALS245A	Motorola	SN74ALS245	
	National	DM74ALS245	
SN74ALS251	National	DM74ALS251	
SN74ALS253	National	DM74ALS253	
SN74ALS257	National	DM74ALS257	
SN74ALS258	National	DM74ALS258	
SN74ALS27	National	DM74ALS27	
SN74ALS273	Motorola	SN74ALS273	
	National	DM74ALS273	
SN74ALS28A	National	DM74ALS28	
SN74ALS30	National	DM74ALS30	
SN74ALS32	Motorola	SN74ALS32	
	National	DM74ALS32	
SN74ALS33	National	DM74ALS33	
SN74ALS352	National	DM74ALS352	
SN74ALS353	National	DM74ALS353	
SN74ALS373	Motorola	SN74ALS373	
	National	DM74ALS373	
SN74ALS374	Motorola	SN74ALS374	
	National	DM74ALS374	
SN74ALS37A	National	DM74ALS37	
SN74ALS38A	National	DM74ALS38	
SN74ALS40A	National	DM74ALS40	
SN74ALS465A	National	DM74ALS465	
SN74ALS466A	National	DM74ALS466	
SN74ALS467A	National	DM74ALS467	
SN74ALS468A	National	DM74ALS468	
SN74ALS518	National	DM74ALS518	
SN74ALS519	National	DM74ALS519	
SN74ALS520	National	DM74ALS520	
SN74ALS521	National	DM74ALS521	
SN74ALS522	National	DM74ALS522	
SN74ALS533	National	DM74ALS533	
SN74ALS534	National	DM74ALS534	
SN74ALS563	National	DM74ALS563	
SN74ALS564	National	DM74ALS564	
SN74ALS573	Motorola	SN74ALS573	
	National	DM74ALS573	
SN74ALS574	Motorola	SN74ALS574	
	National	DM74ALS574	
SN74ALS576	Motorola	SN74ALS576	
	National	DM74ALS576	
SN74ALS580	Motorola	SN74ALS580	
	National	DM74ALS580	
SN74ALS620A	Motorola	SN74ALS620	
	National	DM74ALS620	
SN74ALS621A	Motorola	SN74ALS621	
	National	DM74ALS621	
SN74ALS623A	Motorola	SN74ALS623	
	National	DM74ALS623	
SN74ALS639A	Motorola	SN74ALS639	
SN74ALS640A	Motorola	SN74ALS640	
	National	DM74ALS640	
SN74ALS641A	Motorola	SN74ALS641	
	National	DM74ALS641	
SN74ALS642A	Motorola	SN74ALS642	
	National	DM74ALS642	
SN74ALS643A	Motorola	SN74ALS643	
	National	DM74ALS643	
SN74ALS644A	Motorola	SN74ALS644	
	National	DM74ALS644	
SN74ALS645A	National	DM74ALS645	
SN74ALS689	National	DM74ALS689	
SN74ALS74A	Motorola	SN74ALS74	
	National	DM74ALS74	
SN74ALS804	National	DM74ALS804	
SN74ALS805	National	DM74ALS805	
SN74ALS808	National	DM74ALS808	
SN74ALS810	National	DM74ALS810	
SN74ALS811	National	DM74ALS811	
SN74ALS832	National	DM74ALS832	
SN74ALS873	Motorola	SN74ALS873	
	National	DM74ALS873	
SN74ALS874	Motorola	SN74ALS874	
	National	DM74ALS874	
SN74ALS876	Motorola	SN74ALS876	
	National	DM74ALS876	
SN74ALS880	Motorola	SN74ALS880	
	National	DM74ALS880	
SN74AS00	National	DM74AS00	
SN74AS02	National	DM74AS02	
SN74AS04	National	DM74AS04	
SN74AS08	National	DM74AS08	
SN74AS10	National	DM74AS10	
SN74AS1000	National	DM74AS1000	
SN74AS1004	National	DM74AS1004	
SN74AS1008	National	DM74AS1008	
SN74AS1032	National	DM74AS1032	
SN74AS1034	National	DM74AS1034	
SN74AS1036	National	DM74AS1036	
SN74AS109	National	DM74AS109	
SN74AS11	National	DM74AS11	
SN74AS151	National	DM74AS151	
SN74AS153	National	DM74AS153	
SN74AS157	National	DM74AS157	
SN74AS158	National	DM74AS158	
SN74AS160	National	DM74AS160	
SN74AS161	National	DM74AS161	
SN74AS162	National	DM74AS162	
SN74AS163	National	DM74AS163	
SN74AS168	National	DM74AS168	
SN74AS169	National	DM74AS169	
SN74AS174	National	DM74AS174	
SN74AS175	National	DM74AS175	
SN74AS181B	National	DM74AS181	
SN74AS182	National	DM74AS182	
SN74AS20	National	DM74AS20	
SN74AS21	National	DM74AS21	
SN74AS230	National	DM74AS230	
SN74AS231	National	DM74AS231	
SN74AS240	National	DM74AS240	
SN74AS241	National	DM74AS241	
SN74AS242	National	DM74AS242	
SN74AS243	National	DM74AS243	
SN74AS244	National	DM74AS244	
SN74AS245	National	DM74AS245	
SN74AS250	National	DM74AS250	
SN74AS253	National	DM74AS253	
SN74AS257	National	DM74AS257	
SN74AS258	National	DM74AS258	
SN74AS2620	National	DM74AS2620	
SN74AS2623	National	DM74AS2623	
SN74AS264	National	DM74AS264	
SN74AS2640	National	DM74AS2640	
SN74AS2645	National	DM74AS2645	
SN74AS27	National	DM74AS27	
SN74AS280	National	DM74AS280	
SN74AS282	National	DM74AS282	
SN74AS286	National	DM74AS286	
SN74AS30	National	DM74AS30	
SN74AS32	National	DM74AS32	
SN74AS34	National	DM74AS34	
SN74AS352	National	DM74AS352	
SN74AS353	National	DM74AS353	
SN74AS373	National	DM74AS373	
SN74AS374	National	DM74AS374	
SN74AS533	National	DM74AS533	
SN74AS534	National	DM74AS534	
SN74AS573	National	DM74AS573	
SN74AS574	National	DM74AS574	
SN74AS575	National	DM74AS575	
SN74AS576	National	DM74AS576	
SN74AS577	National	DM74AS577	
SN74AS580	National	DM74AS580	
SN74AS620	National	DM74AS620	
SN74AS621	National	DM74AS621	
SN74AS622	National	DM74AS622	
SN74AS623	National	DM74AS623	
SN74AS638	National	DM74AS638	
SN74AS639	National	DM74AS639	
SN74AS640	National	DM74AS640	
SN74AS641	National	DM74AS641	
SN74AS642	National	DM74AS642	
SN74AS643	National	DM74AS643	
SN74AS644	National	DM74AS644	
SN74AS645	National	DM74AS645	
SN74AS646	National	DM74AS646	
SN74AS648	National	DM74AS648	
SN74AS651	National	DM74AS651	
SN74AS652	National	DM74AS652	
SN74AS74	National	DM74AS74	
SN74AS804A	National	DM74AS804A	
SN74AS805A	National	DM74AS805A	
SN74AS808A	National	DM74AS808A	
SN74AS810	National	DM74AS810	
SN74AS811	National	DM74AS811	
SN74AS821	AMD	AM29821	
SN74AS822	AMD	AM29822	
SN74AS823	AMD	AM29823	
SN74AS824	AMD	AM29824	
SN74AS825	AMD	AM29825	
SN74AS826	AMD	AM29826	
SN74AS827	AMD	AM29827	
SN74AS832A	National	DM74AS832A	
SN74AS841	AMD	AM29841	
SN74AS843	AMD	AM29843	
SN74AS844	AMD	AM29844	
SN74AS845	AMD	AM29845	
SN74AS846	AMD	AM29846	
SN74AS873	National	DM74AS873	
SN74AS874	National	DM74AS874	
SN74AS876	National	DM74AS876	
SN74AS878	National	DM74AS878	
SN74AS879	National	DM74AS879	
SN74AS880	National	DM74AS880	
SN74AS881A	National	DM74AS881A	
SN74AS95	National	DM74AS95	
SN74H00	Fairchild	74H00	
	National	DM74H00	
SN74H01	Fairchild	74H01 74H08	
	National	DM74H01 DM74H08	
SN74H04	Fairchild	74H04	
	National	DM74H04	
SN74H05	Fairchild	74H05	
SN74H10	Fairchild	74H10	
	National	DM74H10	
SN74H101	Fairchild	74H101	
	Signetics	74H101	
SN74H103	Fairchild	74H103	
	National	DM74H103	
SN74H106	Fairchild	74H106	
	National	DM74H106	
SN74H108	Fairchild	74H108	
	National	DM74H108	
SN74H11	Fairchild	74H11	
	National	DM74H11	
SN74H183	Fairchild	74H183	
SN74H20	Fairchild	74H20	
	National	DM74H20	
SN74H21	Fairchild	74H21	
	National	DM74H21	
SN74H22	Fairchild	74H22	
SN74H30	Fairchild	74H30	
	National	DM74H30	
SN74H40	Fairchild	74H40	
	National	DM74H40	
SN74H50	Fairchild	74H50	
	National	DM74H50	
SN74H51	Fairchild	74H51	
	National	DM74H51	
SN74H52	Fairchild	74H52	
SN74H53	Fairchild	74H53	
SN74H54	Fairchild	74H54	
SN74H55	Fairchild	74H55	
SN74H61	Fairchild	74H61	
SN74H62	Fairchild	74H62	
	National	DM74H62	
SN74H73	Fairchild	74H73	
SN74H74	Fairchild	74H74	
	National	DM74H74	
SN74H87	Fairchild	74H87	
SN74HC00	Hitachi	HD74HC00	
	Motorola	**MC74HC00**	**1122**
	National	MM74HC00	
	RCA	**CD74HC00**	**1149**
	SPI	SP74HC00	
	SGS	M74HC00	
	Signetics	**74HC00**	**1156**
	Toshiba	**TC40H000**	**1363**
	Universal	US74HC00	
SN74HC01	Hitachi	HD74HC01	
SN74HC02	Hitachi	HD74HC02	
	Motorola	**MC74HC02**	**1122**
	National	MM74HC02	
	RCA	**CD74HC02**	**1149**
	SPI	SP74HC02	
	SGS	M74HC02	
	Signetics	**74HC02**	**1156**
	Toshiba	**TC40H002**	**1363**
	Universal	US74HC02	
SN74HC03	**Motorola**	**MC74HC03**	**1122**
	National	MM74HC03	
	RCA	**CD74HC03**	**1149**
	SGS	M74HC03	
	Toshiba	**TC74HC03**	**1363**
	Universal	US74HC03	
SN74HC04	Hitachi	HD74HC04	
	Motorola	**MC74HC04**	**1124**
	National	MM74HC04	
	RCA	**CD74HC04**	**1149**
	SPI	SP74HC04	
	SGS	M74HC04	
	Toshiba	**TC40H004**	**1363**
	Universal	US74HC04	
SN74HC05	Motorola	MC74HC05	
	Universal	US74HC05	
SN74HC08	Hitachi	HD74HC08	
	Motorola	**MC74HC08**	**1122**
	National	MM74HC08	
	RCA	**CD74HC08**	**1149**
	SPI	SP74HC08	
	SGS	M74HC08	
	Signetics	**74HC08**	**1156**
	Universal	US74HC08	
SN74HC09	Hitachi	HD74HC09	
SN74HC10	Hitachi	HD74HC10	
	Motorola	**MC74HC10**	**1122**
	National	MM74HC10	
	RCA	**CD74HC10**	**1149**
	SPI	SP74HC10	
	SGS	M74HC10	
	Signetics	**74HC10**	**1156**
	SiliconG	SG75474	
	Toshiba	**TC40H010**	**1363**
	Universal	US74HC10	
SN74HC107	Hitachi	HD74HC107	
	Motorola	**MC74HC107**	**1126**
	National	MM74HC107	
	Nitron	NC74HC107	
	RCA	**CD74HC107**	**1149**
	SPI	SP74HC107	
	SGS	M74HC107	
	Signetics	**74HC107**	**1156**
	Toshiba	**TC40H107**	**1363**
	Universal	US74HC107	
SN74HC109	Hitachi	HD74HC109 HD74HC14	
	Motorola	**MC74HC109**	**1126**
	National	MM74HC109	
	Nitron	NC74HC109	
	RCA	**CD74HC109**	**1149**

(Continued)

◆ Discontinued

The manufacturers report their devices can be used as direct replacements.
Performance details often differ, so compare the specifications considering your requirements.

Texas Instruments (Cont'd)

Manufacturer Device	Replacement Source	Device	IC Master Page
SN74HC109	SPI	SP74HC109	
	SGS	M74HC109	
	Signetics	**74HC109**	1156
	Toshiba	**TC74HC109**	1363
	Universal	US74HC109	
SN74HC11	Hitachi	HD74HC11	
	Motorola	**MC74HC11**	1122
	National	MM74HC11	
	RCA	**CD74HC11**	1149
	SPI	SP74HC11	
	SGS	M74HC11	
	Signetics	**74HC11**	1156
	Toshiba	**TC40H011**	1363
	Universal	US74HC11	
SN74HC112	Hitachi	HD74HC112	
	Motorola	**MC74HC112**	1126
	National	MM74HC112	
	RCA	**CD74HC112**	1149
	SPI	SP74HC112N	
	SGS	M74HC112	
	Signetics	**74HC112**	1156
	Universal	US74HC112	
SN74HC113	Hitachi	HD74HC113	
	Motorola	**MC74HC113**	1126
	National	MM74HC113	
	SPI	SP74HC113	
	SGS	M74HC113	
	Universal	US74HC113	
SN74HC114	Hitachi	HD74HC114	
SN74HC123	Hitachi	HD74HC123	
	Motorola	MC74HC123	
	National	MM74HC123	
	SGS	M74HC123	
	Signetics	**74HC123**	1157
	Universal	US74HC123	
SN74HC125	Hitachi	HD74HC125	
	Motorola	**MC74HC125**	1124
	National	MM74HC125	
	SPI	SP74HC125	
	SGS	M74HC125	
	Toshiba	**TC74HC125**	1363
	Universal	US74HC125	
SN74HC126	Hitachi	HD74HC126	
	Motorola	**MC74HC126**	1124
	National	MM74HC126	
	SPI	SP74HC126	
	SGS	M74HC126	
	Toshiba	**TC74HC126**	1363
	Universal	US74HC126	
SN74HC132	Hitachi	HD74HC132	
	Motorola	**MC74HC132**	1125
	National	MM74HC132	
	RCA	**CD74HC132**	1149
	SPI	SP74HC132	
	SGS	M74HC132	
	Signetics	**74HC132**	1157
	Universal	US74HC132	
SN74HC133	**Motorola**	**MC74HC133**	1122
	National	MM74HC133	
	RCA	CD74HC133	
	SPI	SP74HC133	
	SGS	M74HC133	
	Signetics	74HC133	
	Universal	US74HC133	
SN74HC137	Hitachi	HD74HC137	
	Motorola	MC74HC137	
	National	MM74HC137	
	SPI	SP74HC137	
	SGS	M74HC137	
	Toshiba	**TC74HC137**	1363
	Universal	US74HC137	
SN74HC138	Hitachi	HD74HC138	
	Motorola	**MC74HC138**	1130
	National	MM74HC138	
	Nitron	NC74HC138	
	RCA	**CD74HC138**	1150
	SPI	SP74HC138	
	SGS	M74HC138	
	Signetics	**74HC138**	1157
	SSS	SS74HC138	
	Universal	US74HC138	
SN74HC139	Hitachi	HD74HC139	
	Motorola	**MC74HC139**	1130
	National	MM74HC139	
	Nitron	NC74HC139	
	RCA	**CD74HC139**	1150
	SPI	SP74HC139	
	SGS	M74HC139	
	Signetics	**74HC139**	1157
	SSS	SS74HC139	

(Continued)

Manufacturer Device	Replacement Source	Device	IC Master Page
SN74HC139	**Toshiba**	**TC40H139**	1363
	Universal	US74HC139	
SN74HC14	**Motorola**	**MC74HC14**	1125
	National	MM74HC14	
	RCA	**CD74HC14**	1149
	SPI	SP74HC14	
	SGS	M74HC14	
	Signetics	**74HC14**	1156
	Universal	US74HC14	
SN74HC147	Hitachi	HD74HC147	
	Motorola	**MC74HC147**	1131
	National	MM74HC147	
	RCA	**CD74HC147**	1150
	SPI	SP74HC147	
	SGS	M74HC147	
	Signetics	**74HC147**	1157
	Universal	US74HC147	
SN74HC148	Hitachi	HD74HC148	
	Nitron	NC74HC148	
	SPI	SP74HC148	
	SGS	M74HC148	
	Toshiba	**TC74HC148**	1363
SN74HC151	Hitachi	HD74HC151	
	Motorola	**MC74HC151**	1129
	National	MM74HC151	
	RCA	**CD74HC151**	1150
	SPI	SP74HC151	
	SGS	M74HC151	
	Signetics	**74HC151**	1157
	Universal	US74HC151	
SN74HC152	Hitachi	HD74HC152	
SN74HC153	Hitachi	HD74HC153	
	Motorola	**MC74HC153**	1129
	National	MM74HC153	
	RCA	**CD74HC153**	1150
	SPI	SP74HC153	
	SGS	M74HC153	
	Signetics	**74HC153**	1157
	Toshiba	**TC40H153**	1363
	Universal	US74HC153	
SN74HC154	Hitachi	HD74HC154	
	Motorola	**MC74HC154**	1130
	National	MM74HC154	
	RCA	**CD74HC154**	1150
	SGS	M74HC154	
	Signetics	**74HC154**	1157
	Universal	US74HC154	
SN74HC157	Hitachi	HD74HC157	
	Motorola	**MC74HC157**	1129
	National	MM74HC157	
	Nitron	NC74HC157	
	RCA	**CD74HC157**	1150
	SPI	SP74HC157	
	SGS	M74HC157	
	Signetics	**74HC157**	1157
	Toshiba	**TC40H157**	1363
	Universal	US74HC157	
SN74HC158	Hitachi	HD74HC158	
	Motorola	**MC74HC158**	1129
	National	MM74HC158	
	RCA	**CD74HC158**	1150
	SPI	SP74HC158	
	SGS	M74HC158	
	Signetics	**74HC158**	1157
	Toshiba	**TC40H158**	1363
	Universal	US74HC158	
SN74HC160	**Motorola**	**MC74HC160**	1127
	National	MM74HC160	
	RCA	**CD74HC160**	1150
	SPI	SP74HC160	
	SGS	M74HC160	
	Signetics	**74HC160**	1157
	Universal	US74HC160	
SN74HC161	Hitachi	HD74HC161	
	Motorola	**MC74HC161**	1127
	National	MM74HC161	
	RCA	**CD74HC161**	1150
	SPI	SP74HC161	
	SGS	M74HC161	
	Signetics	**74HC161**	1157
	Universal	US74HC161	
SN74HC162	Hitachi	HD74HC162	
	Motorola	**MC74HC162**	1127
	National	MM74HC162	
	RCA	**CD74HC162**	1150
	SPI	SP74HC162	
	SGS	M74HC162	
	Signetics	**74HC162**	1157
	Universal	US74HC162	
SN74HC163	Hitachi	HD74HC163	
	Motorola	**MC74HC163**	1127
	National	MM74HC163	

(Continued)

Manufacturer Device	Replacement Source	Device	IC Master Page
SN74HC163	**RCA**	**CD74HC163**	1150
	SPI	SP74HC163	
	SGS	M74HC163	
	Signetics	**74HC163**	1157
	Universal	US74HC163	
SN74HC164	Hitachi	HD74HC164	
	Motorola	**MC74HC164**	1128
	National	MM74HC164	
	RCA	**CD74HC164**	1149
	SPI	SP74HC164	
	SGS	M74HC164	
	Signetics	**74HC164**	1157
	Universal	US74HC164	
SN74HC165	Hitachi	HD74HC165	
	Motorola	**MC74HC165**	1128
	National	MM74HC165	
	RCA	**CD74HC165**	1149
	SPI	SP74HC165	
	SGS	M74HC165	
	Signetics	**74HC165**	1157
	Universal	US74HC165	
SN74HC166	Motorola	MC74HC166	
	Nitron	NC74HC166	
	RCA	**CD74HC166**	1149
	SGS	M74HC166	
	Signetics	**74HC166**	1157
	Universal	US74HC166	
SN74HC173	Hitachi	HD74HC173	
	Motorola	**MC74HC173**	1126
	National	MM74HC173	
	RCA	**CD74HC173**	1149
	SPI	SP74HC173	
	SGS	M74HC173	
	Signetics	**74HC173**	1157
	Universal	US74HC173	
SN74HC174	Hitachi	HD74HC174	
	Motorola	**MC74HC174**	1126
	National	MM74HC174	
	Nitron	NC74HC174	
	RCA	**CD74HC174**	1149
	SPI	SP74HC174	
	SGS	M74HC174	
	Signetics	74HC174	
	Toshiba	**TC40H174**	1363
	Universal	US74HC174	
SN74HC175	Hitachi	HD74HC175	
	Motorola	**MC74HC175**	1126
	National	MM74HC175	
	Nitron	NC74HC175	
	RCA	**CD74HC175**	1149
	SPI	SP74HC175	
	SGS	M74HC175	
	Signetics	**74HC175**	1157
	Toshiba	**TC40H175**	1363
	Universal	US74HC175	
SN74HC190	Hitachi	HD74HC190	
	Motorola	MC74HC190	
	RCA	**CD74HC190**	1150
	SGS	M74HC190	
	Signetics	PC74HC190	
		PCF74HC190	
	Toshiba	**TC74HC190**	1363
	Universal	US74HC190	
SN74HC191	Hitachi	HD74HC191	
	Nitron	NC74HC191	
	RCA	**CD74HC191**	1150
	SGS	M74HC191	
	Signetics	**74HC191**	1157
	Universal	US74HC191	
SN74HC192	Hitachi	HD74HC192	
	Motorola	**MC74HC192**	1127
	National	MM74HC192	
	RCA	**CD74HC192**	1150
	SPI	SP74HC192	
	SGS	M74HC192	
	Signetics	**74HC192**	1157
	Toshiba	**TC40H192**	1363
	Universal	US74HC192	
SN74HC193	Hitachi	HD74HC193	
	Motorola	**MC74HC193**	1127
	National	MM74HC193	
	RCA	**CD74HC193**	1150
	SPI	SP74HC193	
	SGS	M74HC193	
	Signetics	**74HC193**	1157
	Toshiba	**TC40H193**	1363
	Universal	US74HC193	
SN74HC194	Hitachi	HD74HC194	
	Motorola	**MC74HC194**	1128
	National	MM74HC194	
	RCA	**CD74HC194**	1149
	SPI	SP74HC194	

(Continued)

Manufacturer Device	Replacement Source	Device	IC Master Page
SN74HC194	SGS	M74HC194	
	Signetics	**74HC194**	1157
	Universal	US74HC194	
SN74HC195	Hitachi	HD74HC195	
	Motorola	**MC74HC195**	1128
	National	MM74HC195	
	RCA	**CD74HC195**	1149
	SPI	SP74HC195	
	SGS	M74HC195	
	Signetics	**74HC195**	1157
	Universal	US74HC195	
SN74HC20	Hitachi	HD74HC20	
	Motorola	**MC74HC20**	1122
	National	MM74HC20	
	RCA	**CD74HC20**	1149
	SPI	SP74HC20	
	SGS	M74HC20	
	Signetics	**74HC20**	1156
	Toshiba	**TC40H020**	1363
	Universal	US74HC20	
SN74HC21	Hitachi	HD74HC21	
	Toshiba	**TC74HC21**	1363
	Universal	US74HC21	
SN74HC221	Hitachi	HD74HC221	
SN74HC237	Hitachi	HD74HC237	
	Motorola	MC74HC237	
	SGS	M74HC237	
	TI	SN74HC137	
	Toshiba	**TC74HC237**	1363
	Universal	US74HC237	
SN74HC238	**RCA**	**CD74HC238**	1150
	SPI	SP74HC238	
	SGS	M74HC238	
	Signetics	**74HC238**	1157
	SSS	SS74HC238	
SN74HC239	Motorola	MC74HC239	
	SPI	SP74HC239	
SN74HC240	Hitachi	HD74HC240	
	Mitel	MD74HC240	
	Motorola	**MC74HC240**	1124
	National	MM74HC240	
	Nitron	NC74HC240	
	RCA	**CD74HC240**	1149
	SPI	SP74HC240	
	SGS	M74HC240	
	Signetics	**74HC240**	1157
	SSS	SS74HC240	
	Supertex	SI74HC240	
	Toshiba	**TC40H240**	1363
	Universal	US74HC240	
	Zytrex	ZX74HC240	
SN74HC241	Hitachi	HD74HC241	
	Mitel	MD74HC241	
	Motorola	**MC74HC241**	1124
	National	MM74HC241	
	Nitron	NC74HC241	
	RCA	**CD74HC241**	1149
	SPI	SP74HC241	
	SGS	M74HC241	
	Signetics	**74HC241**	1157
	SSS	SS74HC241	
	Supertex	SI74HC241	
	Universal	US74HC240	
	Zytrex	ZX74HC241	
SN74HC242	Hitachi	HD74HC242	
	Motorola	**MC74HC242**	1124
	National	MM74HC242	
	Nitron	NC74HC242	
	RCA	**CD74HC242**	1149
		SGN	
	SPI	SP74HC242	
	SGS	M74HC242	
	Signetics	**74HC242**	1158
	Universal	US74HC242	
SN74HC243	Hitachi	HD74HC243	
	Motorola	**MC74HC243**	1124
		MC74HC245	1124
	National	MM74HC243	
	RCA	**CD74HC243**	1149
	SPI	SP74HC243	
	SGS	M74HC243	
		M74HC245	
	Signetics	**74HC243**	1158
	Universal	US74HC243	
SN74HC244	Hitachi	HD74HC244	
	Mitel	MD74HC244	
	Motorola	**MC74HC244**	1124
	National	MM74HC244	
	Nitron	NC74HC244	
	RCA	**CD74HC244**	1149
	SPI	SP74HC244	
	SGS	M74HC244	

(Continued)

◆ Discontinued

Bold face device numbers indicate manufacturers data is provided in the IC Master on the pages noted.

ALTERNATE SOURCE DIRECTORY

Texas Instruments (Cont'd)

Manufacturer Device	Replacement Source	Device	IC Master Page
SN74HC244	**Signetics**	**74HC244**	1158
	SSS	SS74HC244	
	Supertex	SI74HC244	
	Universal	US74HC244	
	Zytrex	ZX74HC244	
SN74HC245	Hitachi	HD74HC245	
	Motorola	**MC74HC245**	1124
	National	MM74HC245	
	Nitron	NC74HC245	
	RCA	**CD74HC245**	1149
	Signetics	**74HC245**	1158
	SSS	SS74HC245	
	Universal	US74HC245	
SN74HC251	Hitachi	HD74HC251	
	Motorola	**MC74HC251**	1129
	National	MM74HC251	
	RCA	**CD74HC251**	1150
	SPI	SP74HC251	
	SGS	M74HC251	
	Signetics	**74HC251**	1158
	Universal	US74HC251	
SN74HC253	Hitachi	HD74HC253	
	Motorola	**MC74HC253**	1129
	National	MM74HC253	
	RCA	**CD74HC253**	1150
	SPI	SP74HC253	
	SGS	M74HC253	
	Signetics	**74HC253**	1158
	Universal	US74HC253	
SN74HC257	Hitachi	HD74HC257	
	Motorola	**MC74HC257**	1129
	National	MM74HC257	
	Nitron	NC74HC257	
	RCA	**CD74HC257**	1150
	SPI	SP74HC257	
	SGS	M74HC257	
	Signetics	**74HC257**	1158
	Universal	US74HC257	
SN74HC258	Hitachi	HD74HC258	
	Motorola	MC74HC258	
	Toshiba	**TC74HC258**	1363
	Universal	US74HC258	
SN74HC259	Hitachi	HD74HC259	
	Motorola	**MC74HC259**	1126
	National	MM74HC259	
	RCA	**CD74HC259**	1150
	SPI	SP74HC259	
	Signetics	**74HC259**	1158
	Universal	US74HC259	
SN74HC266	Hitachi	HD74HC266	
	Motorola	**MC74HC266**	1123
	National	MM74HC266	
	SPI	SP74HC266	
	SGS	M74HC266	
	Signetics	**74HC266**	1158
	Universal	US74HC266	
SN74HC27	**Motorola**	**MC74HC27**	1122
	National	MM74HC27	
	RCA	**CD74HC27**	1149
	SPI	SP74HC27	
	SGS	M74HC27	
	Signetics	**74HC27**	1156
	Toshiba	**TC40H027**	1363
	Universal	US74HC27	
SN74HC273	CTI	74HC273	
	Hitachi	HD74HC273	
	Motorola	**MC74HC273**	1126
	Nitron	NC74HC273	
	RCA	**CD74HC273**	1149
	SPI	SP74HC273	
	SGS	M74HC273	
	Signetics	**74HC273**	1158
	Universal	US74HC273	
SN74HC280	Hitachi	HD74HC280	
	Motorola	**MC74HC280**	1132
	National	MM74HC280	
	RCA	**CD74HC280**	1150
	SPI	SP74HC280	
	SGS	M74HC280	
	Signetics	**74HC280**	1158
SN74HC298	Hitachi	HD74HC298	
	Motorola	MC74HC298	
	SPI	SP74HC298	
	SGS	M74HC298	
	Universal	US74HC298	
SN74HC299	Hitachi	HD74HC299	
SN74HC30	Hitachi	HD74HC30	
	Motorola	**MC74HC30**	1122
	National	MM74HC30	
	RCA	**CD74HC30**	1149
SN74HC30	SPI	SP74HC30	
	SGS	M74HC30	
	Signetics	**74HC30**	1156
	Universal	US74HC30	
SN74HC32	Hitachi	HD74HC27	
		HD74HC32	
	Motorola	**MC74HC32**	1122
	National	MM74HC32	
	RCA	**CD74HC32**	1149
	SPI	SP74HC32	
	SGS	M74HC32	
	Signetics	**74HC32**	1156
	Toshiba	**TC40H032**	1363
	Universal	US74HC32	
SN74HC354	Hitachi	HD74HC354	
	Motorola	**MC74HC354**	1130
	National	MM74HC354	
	RCA	**CD74HC354**	1150
	SGS	M74HC354	
	Signetics	**74HC354**	1158
	Universal	US74HC354	
SN74HC356	Hitachi	HD74HC356	
	Motorola	**MC74HC356**	1130
	National	MM74HC356	
	RCA	**CD74HC356**	1150
	SGS	M74HC356	
	Signetics	**74HC356**	1158
	Universal	US74HC356	
SN74HC365	Hitachi	HD74HC365	
	Motorola	**MC74HC365**	1124
	National	MM74HC365	
	RCA	**CD74HC365**	1149
	SPI	SP74HC365	
	SGS	M74HC365	
	Universal	US74HC365	
SN74HC366	Hitachi	HD74HC366	
	Motorola	**MC74HC366**	1124
	National	MM74HC366	
	RCA	**CD74HC366**	1149
	SPI	SP74HC366	
	SGS	M74HC366	
	Signetics	**74HC366**	1158
	Universal	US74HC366	
SN74HC367	Hitachi	HD74HC367	
	Motorola	**MC74HC367**	1124
	National	MM74HC367	
	Nitron	NC74HC367	
	RCA	**CD74HC367**	1149
	SPI	SP74HC367	
	SGS	M74HC367	
	Signetics	**74HC367**	1158
	Universal	US74HC367	
SN74HC368	Hitachi	HD74HC368	
	Motorola	**MC74HC368**	1124
	National	MM74HC368	
	RCA	**CD74HC368**	1149
	SGS	M74HC368	
	Signetics	**74HC368**	1158
	Universal	US74HC368	
SN74HC373	Hitachi	HD74HC373	
	Mitel	MD74HC373	
	Motorola	**MC74HC373**	1126
	National	MM74HC373	
	Nitron	NC74HC373	
	RCA	**CD74HC373**	1150
	SPI	SP74HC373	
	SGS	M74HC373	
	Signetics	**74HC373**	1158
	SSS	SS74HC373	
	Supertex	SI74HC373	
	Universal	US74HC373	
	Zytrex	ZX74HC373	
SN74HC374	Hitachi	HD74HC374	
	Mitel	MD74HC374	
	Motorola	**MC74HC374**	1126
	National	MM74HC374	
	Nitron	NC74HC374	
	RCA	**CD74HC374**	1149
	SPI	SP74HC374	
	SGS	M74HC374	
	Signetics	**74HC374**	1158
	SSS	SS74HC374	
	Universal	US74HC374	
	Zytrex	ZX74HC374	
SN74HC375	Hitachi	HD74HC375	
	Motorola	MC74HC375	
	Toshiba	**TC74HC375**	1363
	Universal	US74HC375	
SN74HC377	Hitachi	HD74HC377	
	Motorola	MC74HC377	
	RCA	**CD74HC377**	1149
	SGS	M74HC377	
SN74HC377	**Signetics**	**74HC377**	1158
	Universal	US74HC377	
SN74HC386	Motorola	MC74HC386	
	Toshiba	**TC74HC386**	1363
SN74HC390	Hitachi	HD74HC390	
	Motorola	**MC74HC390**	1127
	National	MM74HC390	
	RCA	**CD74HC390**	1150
	SPI	SP74HC390	
	SGS	M74HC390	
	Signetics	**74HC390**	1158
	Universal	US74HC390	
SN74HC393	Hitachi	HD74HC393	
	Motorola	**MC74HC393**	1127
	National	MM74HC393	
	Nitron	NC74HC393	
	RCA	**CD74HC393**	1150
	SPI	SP74HC393	
	SGS	M74HC393	
	Signetics	**74HC393**	1158
	Universal	US74HC393	
SN74HC4002	**Motorola**	**MC74HC4002**	1123
	National	MM74HC4002	
	RCA	**CD74HC4002**	1149
	SPI	SP74HC4002	
	SGS	M74HC4002	
	Signetics	**74HC4002**	1160
	Universal	US74HC4002	
SN74HC4017	**Motorola**	**MC74HC4017**	1128
	National	MM74HC4017	
	RCA	**CD74HC4017**	1150
	SPI	SP74HC4017	
	SGS	M74HC4017	
	Signetics	**74HC4017**	1160
	Universal	US74HC4017	
SN74HC4020	Hitachi	HD74HC4020	
	Motorola	**MC74HC4020**	1128
	National	MM74HC4020	
	RCA	**CD74HC4020**	1150
	SPI	SP74HC4020	
	SGS	M74HC4020	
	Signetics	**74HC4020**	1160
	Universal	US74HC4020	
SN74HC4024	Hitachi	HD74HC4024	
	Motorola	MC74HC4024	
	RCA	**CD74HC4024**	1150
	SGS	M74HC4024	
	Signetics	**74HC4024**	1160
	Universal	US74HC4024	
SN74HC4040	Hitachi	HD74HC4040	
	Motorola	**MC74HC4040**	1128
	National	MM74HC4040	
	RCA	**CD74HC4040**	1150
	SPI	SP74HC4040	
	SGS	M74HC4040	
	Signetics	**74HC4040**	1160
	Universal	US74HC4040	
SN74HC4049	**Motorola**	**MC74HC4049**	1124
	National	MM74HC4049	
	RCA	**CD74HC4049**	1149
	SGS	M74HC4049	
	Signetics	**74HC4049**	1160
	Universal	US74HC4049	
SN74HC4051	**Motorola**	**MC74HC4051**	1130
	RCA	**CD74HC4051**	1150
	SGS	M74HC4051	
	Signetics	**74HC4051**	1160
	Universal	US74HC4051	
SN74HC4052	**Motorola**	**MC74HC4052**	1130
	RCA	**CD74HC4052**	1150
	SGS	M74HC4052	
	Signetics	**74HC4052**	1160
	Universal	US74HC4052	
SN74HC4053	**Motorola**	**MC74HC4053**	1130
	RCA	**CD74HC4053**	1150
	SGS	M74HC4053	
	Signetics	**74HC4053**	1160
	Universal	US74HC4053	
SN74HC4060	**Motorola**	**MC74HC4060**	1128
	National	MM74HC4060	
	RCA	**CD74HC4060**	1150
	SGS	M74HC4060	
	Signetics	**74HC4060**	1160
	Universal	US74HC4060	
SN74HC4075	**Motorola**	**MC74HC4075**	1122
	National	MM74HC4075	
	RCA	**CD74HC4075**	1149
	SPI	SP74HC4075	
	Signetics	**74HC4075**	1161
	Toshiba	**TC74HC4075**	1363
SN74HC4078A	**Motorola**	**MC74HC4078**	1123
	National	MM74HC4078	
SN74HC4078A	SPI	SP74HC4078	
	SGS	M74HC4078	
	Toshiba	**TC74HC4078**	1363
	Universal	US74HC4078	
SN74HC42	Hitachi	HD74HC42	
	Motorola	**MC74HC42**	1130
	National	MM74HC42	
	Nitron	NC74HC42	
	RCA	**CD74HC42**	1150
	SPI	SP74HC42	
	SGS	M74HC42	
	Signetics	**74HC42**	1156
	Universal	US74HC42	
SN74HC423	Hitachi	HD74HC423	
	Toshiba	**TC74HC423**	1363
	Universal	US74HC423	
SN74HC4511	Universal	US74HC4511	
SN74HC4514	Hitachi	HD74HC4514	
	Motorola	**MC74HC4514**	1130
	National	MM74HC4514	
	RCA	**CD74HC4514**	1150
	SGS	M74HC4514	
	Signetics	**74HC4514**	1161
	Universal	US74HC4514	
SN74HC4515	**Toshiba**	**TC74HC4515**	1363
SN74HC490	Hitachi	HD74HC490	
SN74HC51	Hitachi	HD74HC51	
	Motorola	MC74HC51	
	National	MM74HC51	
	Nitron	NC74HC51	
	Toshiba	**TC74HC51**	1363
	Universal	US74HC51	
SN74HC533	Hitachi	HD74HC533	
	Motorola	**MC74HC533**	1126
	National	MM74HC533	
	RCA	**CD74HC533**	1150
	SPI	SP74HC533	
	SGS	M74HC533	
	Signetics	**74HC533**	1159
	SSS	SS74HC533	
	Universal	US74HC533	
SN74HC534	Hitachi	HD74HC534	
	Motorola	**MC74HC534**	1127
	National	MM74HC534	
	RCA	**CD74HC534**	1149
	SPI	SP74HC534	
	SGS	M74HC534	
	Signetics	**74HC534**	1159
	SSS	SS74HC534	
	Universal	US74HC534	
SN74HC540	Hitachi	HD74HC540	
	Motorola	**MC74HC540**	1125
	RCA	**CD74HC540**	1149
	SGS	M74HC540	
	Signetics	**74HC540**	1159
	SSS	SS74HC540	
	Toshiba	**TC74HC540**	1363
	Universal	US74HC540	
SN74HC541	Hitachi	HD74HC541	
	Motorola	**MC74HC541**	1125
	RCA	**CD74HC541**	1149
	SGS	M74HC541	
	Signetics	**74HC541**	1159
	SSS	SS74HC541	
	Universal	US74HC541	
SN74HC563	Hitachi	HD74HC563	
	Motorola	**MC74HC563**	1126
	National	MM74HC563	
	RCA	**CD74HC563**	1150
	SPI	SP74HC563	
	SGS	M74HC563	
	Signetics	**74HC563**	1159
	SSS	SS74HC563	
	Universal	US74HC563	
SN74HC564	Hitachi	HD74HC564	
	Motorola	**MC74HC564**	1127
	National	MM74HC564	
	RCA	**CD74HC564**	1149
		MC74HC564	
	SGS	M74HC564	
	Signetics	**74HC564**	1159
	SSS	SS74HC564	
	Universal	US74HC564	
SN74HC573	Hitachi	HD74HC573	
	Motorola	**MC74HC573**	1126
	National	MM74HC573	
	RCA	**CD74HC573**	1150
	SPI	SP74HC573	
	SGS	M74HC573	
	Signetics	**74HC573**	1159
	SSS	SS74HC573	

(Continued)

◆ Discontinued

The manufacturers report their devices can be used as direct replacements.
Performance details often differ, so compare the specifications considering your requirements.

Texas Instruments (Cont'd)

Manufacturer Device	Replacement Source	Device	IC Master Page
SN74HC573	**Toshiba**	**TC74HC573**	1363
	Universal	US74HC573	
SN74HC574	Hitachi	HD74HC574	
	Motorola	**MC74HC574**	1127
	National	MM74HC574	
	RCA	**CD74HC574**	1149
	SPI	SP74HC574	
	SGS	M74HC574	
	Signetics	**74HC574**	1159
	SSS	SS74HC574	
	Universal	US74HC574	
SN74HC58	Motorola	MC74HC58	
	National	MM74HC58	
	Universal	US74HC58	
SN74HC589	Motorola	MC74HC589	
	Universal	US74HC589	
SN74HC590	Hitachi	HD74HC590	
	Motorola	MC74HC590	
	Universal	US74HC590	
SN74HC592	Hitachi	HD74HC592	
	Motorola	MC74HC592	
	Universal	US74HC592	
SN74HC593	Hitachi	HD74HC593	
	Motorola	MC74HC593	
	Universal	US74HC593	
SN74HC595	Cypress	CY7C164	
	Hitachi	HD74HC595	
	Inmos	IMS1620	
	Motorola	MC74HC595	
	NEC	MPD4362	
	SGS	M74HC595	
	Universal	US74HC595	
SN74HC620	Hitachi	HD74HC620	
	Toshiba	**TC74HC620**	1363
SN74HC623	Hitachi	HD74HC623	
	Toshiba	**TC74HC623**	1363
SN74HC640	Hitachi	HD74HC640	
	Motorola	**MC74HC640**	1125
	National	MM74HC640	
	Nitron	NC74HC640	
	RCA	**CD74HC640**	1149
	Signetics	**74HC640**	1159
	SSS	SS74HC640	
	Universal	US74HC640	
SN74HC643	Hitachi	HD74HC643	
	Motorola	**MC74HC643**	1125
	National	MM74HC643	
	RCA	**CD74HC643**	1149
	SGS	M74HC643	
	Signetics	**74HC643**	1159
	SSS	SS74HC643	
	Universal	US74HC643	
SN74HC645	National	MM74HC645	
	Signetics	74HC645	
	SSS	SS74HC645	
SN74HC646	Hitachi	HD74HC646	
	Motorola	**MC74HC646**	1125
	National	MM74HC646	
	Nitron	NC74HC646	
	RCA	**CD74HC646**	1149
	SGS	M74HC646	
	Signetics	**74HC646**	1159
	Universal	US74HC646	
SN74HC648	Hitachi	HD74HC648	
	Motorola	**MC74HC648**	1125
	National	MM74HC648	
	RCA	**CD74HC648**	1149
	SGS	M74HC648	
	Signetics	**74HC648**	1159
	Universal	US74HC648	
SN74HC651	Hitachi	HD74HC651	
	Motorola	MC74HC651	
	Toshiba	**TC74HC651**	1363
SN74HC652	Hitachi	HD74HC652	
	Motorola	MC74HC652	
	Toshiba	**TC74HC652**	1363
SN74HC658	Motorola	MC74HC658	
SN74HC659	Motorola	MC74HC659	
SN74HC664	Motorola	MC74HC664	
SN74HC665	Motorola	MC74HC665	
SN74HC670	**RCA**	**CD74HC670**	1149
	SGS	M74HC670	
	Signetics	**74HC670**	1159
SN74HC688	**Motorola**	**MC74HC688**	1131
	National	MM74HC688	
	RCA	**CD74HC688**	1150
	SGS	M74HC688	
	Signetics	74HC688	
	Toshiba	**TC74HC688**	1363
SN74HC73	Hitachi	HD74HC73	
	Motorola	**MC74HC73**	1126
	National	MM74HC73	
	RCA	**CD74HC73**	1149
	SPI	SP74HC73	
	SGS	M74HC73	
	Signetics	**74HC73**	1156
	Toshiba	**TC74HC73**	1363
	Universal	US74HC73	
SN74HC74	Hitachi	HD74HC74	
	Motorola	**MC74HC74**	1126
	National	MM74HC74	
	Nitron	NC74HC74	
	RCA	**CD74HC74**	1149
	SPI	SP74HC74	
	SGS	M74HC74	
	Signetics	**74HC74**	1156
	Toshiba	**TC40H074**	1363
	Universal	US74HC74	
SN74HC75	Hitachi	HD74HC75	
	Motorola	**MC74HC75**	1126
	National	MM74HC75	
	RCA	**CD74HC75**	1150
	SPI	SP74HC75	
	SGS	M74HC75	
	Signetics	**74HC75**	1156
	Toshiba	**TC74HC75**	1363
	Universal	US74HC75	
SN74HC76	Hitachi	HD74HC76	
	Motorola	**MC74HC76**	1126
	National	MM74HC76	
	SPI	SP74HC76	
	SGS	M74HC76	
	Signetics	74HC76	
	Toshiba	**TC40H076**	1363
	Universal	US74HC76	
SN74HC77	Hitachi	HD74HC77	
	National	MM74HC77	
	RCA	CD74HC77	
	SPI	SP74HC77	
	Toshiba	**TC74HC77**	1363
SN74HC78	Hitachi	HD74HC78	
SN74HC85	**Motorola**	**MC74HC85**	1131
	National	MM74HC85	
	RCA	**CD74HC85**	1150
	SPI	SP74HC85	
	SGS	M74HC85	
	Signetics	**74HC85**	1156
	Universal	US74HC85	
SN74HC86	Hitachi	HD74HC86	
	Motorola	**MC74HC86**	1123
	National	MM74HC86	
	RCA	**CD74HC86**	1149
	SPI	SP74HC86N	
	SGS	M74HC86	
	Signetics	**74HC86**	1156
	Universal	US74HC86	
SN74HCT125	Hitachi	HD74HCT125	
	Motorola	MC74HCT125	
	Universal	US74HCT125	
SN74HCT126	Hitachi	HD74HCT126	
	Motorola	MC74HCT126	
	Universal	US74HCT126	
SN74HCT137	CTI	74HCT137	
	MicroTech	74HCT137 74HCTR137	
	SGS	M74HCT137	
	Supertex	74HCT137	
	Toshiba	**TC74HCT137**	1363
	Universal	US74HCT137	
SN74HCT138	CTI	74HCT138	
	IDT	IDT74HCT138	
	Mitel	MD74HCT138	
	Motorola	MC74HCT138	
	Nitron	NC74HCT138	
	Plessey	MV74HCT138	
	RCA	**CD74HCT138**	1150
	SPI	SP74HCT138	
	SGS	M74HCT138	
	Signetics	**74HCT138**	1157
	SSS	SS74HCT138	
	Toshiba	**TC74HCT138**	1363
	Zytrex	ZX74HCT138-2	
SN74HCT154	MicroTech	74HCTR154	
SN74HCT237	Universal	US74HCT237	
SN74HCT238	CTI	74HCT238	
	Plessey	MV74HCT238	
	RCA	**CD74HCT238**	1150
	Signetics	**74HCT238**	1157
	SSS	SS74HCT238	
SN74HCT240	CTI	74HCT240	
	Hitachi	HD74HCT240	
	Micrel	MIC74HCT240	
	MicroTech	74HCTR240	
	Mitel	MD74HCT240	
	Motorola	MC74HCT240	
	National	MM74HCT240	
	Nitron	NC74HCT240	
	Plessey	MV74HCT240	
	RCA	**CD74HCT240**	1149
	SPI	SP74HCT240	
	SGS	M74HCT240	
	Signetics	**74HCT240**	1157
	SSS	SS74HCT240	
	Supertex	SI74HCT240	
	Toshiba	**TC74HCT240**	1363
	Universal	US74HCT240	
	Zytrex	ZX74HCT240-2	
SN74HCT241	CTI	74HCT241	
	Hitachi	HD74HCT241	
	Micrel	MIC74HCT241	
	MicroTech	74HCTR241	
	Mitel	MD74HCT241	
	Motorola	MC74HCT241	
	National	MM74HCT241	
	Nitron	NC74HCT241	
	Plessey	MV74HCT241	
	RCA	**CD74HCT241**	1149
	SPI	SP74HCT241	
	SGS	M74HCT241	
	Signetics	**74HCT241**	1157
	SSS	SS74HCT241	
	Supertex	SI74HCT241	
	Toshiba	**TC74HCT241**	1363
	Universal	US74HCT241	
	Zytrex	ZX74HCT241-2	
SN74HCT242	Hitachi	HD74HCT242	
	Micrel	MIC74HCT242	
	Nitron	NC74HCT242	
	RCA	**CD74HCT242**	1149
	Signetics	**74HCT242**	1158
	Universal	US74HCT242	
SN74HCT243	Hitachi	HD74HCT243	
	Micrel	MIC74HCT243	
	RCA	CD74HCT243	
	Signetics	**74HCT243**	1158
	Universal	US74HCT243	
SN74HCT244	CTI	74HCT244	
	Hitachi	HD74HCT244	
	Micrel	MIC74HCT244	
	MicroTech	74HCTR244	
	Mitel	MD74HCT244	
	Motorola	MC74HCT244	
	National	MM74HCT244	
	Nitron	NC74HCT244	
	Plessey	MV74HCT244	
	RCA	**CD74HCT244**	1149
	SPI	SP74HCT244	
	SGS	M74HCT244	
	Signetics	**74HCT244**	1158
	SSS	SS74HCT244	
	Supertex	SI74HCT244	
	Toshiba	**TC74HCT244**	1363
	Universal	US74HCT244	
	Zytrex	ZX74HCT244-2	
SN74HCT245	CTI	74HCT245	
	GTEMicro	G74SC245	
	Hitachi	HD74HCT245	
	Micrel	MIC74HCT245	
	MicroTech	74HCTR245	
	Mitel	MD74HCT245	
	Motorola	MC74HCT245	
	National	MM74HCT245	
	Plessey	MV74HCT245 MV74SC245	
	RCA	**CD74HCT245**	1149
	SPI	SP74HCT245	
	SGS	M74HCT245	
	Signetics	**74HCT245**	1158
	SSS	SS74HCT245	
	Toshiba	**TC74HCT245**	1363
	Universal	US74HCT245	
SN74HCT280	MicroTech	74HCTR280	
SN74HCT373	CTI	74HCT373	
	GTEMicro	G74SC373	
	Hitachi	HD74HCT373	
	Micrel	MIC74HCT373	
	MicroTech	74HCTR373	
	Mitel	MD74HCT373	
	Motorola	MC74HCT373	
	National	MM74HCT373	
	Nitron	NC74HCT373	
	Plessey	MV74HCT373 MV74SC373	
SN74HCT373	**RCA**	**CD74HCT373**	1150
	SPI	SP74HCT373	
	SGS	M74HCT373	
	Signetics	**74HCT373**	1158
	SSS	SS74HCT373	
	Supertex	SI74HCT373	
	Toshiba	**TC74HCT373**	1363
	Universal	US74HCT373	
	Zytrex	ZX74HCT373-2	
SN74HCT374	CTI	74HCT374	
	GTEMicro	G74SC374	
	Hitachi	HD74HCT374	
	Micrel	MIC74HCT374	
	MicroTech	74HCTR374	
	Mitel	MD74HCT374	
	Motorola	MC74HCT374	
	National	MM74HCT374	
	Nitron	NC74HCT374	
	Plessey	MV74HCT374 MV74SC374	
	RCA	CD74HCT374	
	SPI	SP74HCT374	
	SGS	M74HCT374	
	Signetics	**74HCT374**	1158
	SSS	SS74HCT374	
	Supertex	SI74HCT374	
	Toshiba	**TC74HCT374**	1363
	Universal	US74HCT374	
	Zytrex	ZX74HCT374-2	
SN74HCT533	CTI	74HCT533	
	Hitachi	HD74HCT533	
	Micrel	MIC74HCT533	
	MicroTech	74HCTR533	
	Motorola	MC74HCT533	
	Plessey	MV74HCT533	
	RCA	**CD74HCT533**	1150
	Signetics	**74HCT533**	1159
	SSS	SS74HCT533	
	Universal	US74HCT533	
	Zytrex	ZX74HCT533	
SN74HCT534	CTI	74HCT534	
	Hitachi	HD74HCT534	
	Micrel	MIC74HCT534	
	MicroTech	74HCTR534	
	Motorola	MC74HCT534	
	Plessey	MV74HCT534	
	RCA	CD74HCT534	
	Signetics	**74HCT534**	1159
	SSS	SS74HCT534	
	Universal	US74HCT534	
	Zytrex	ZX74HCT534-2	
SN74HCT540	CTI	74HCT540	
	Hitachi	HD74HCT540	
	Micrel	MIC74HCT540	
	MicroTech	74HCTR540	
	Mitel	MD74HCT540	
	Motorola	MC74HCT540	
	Plessey	MV74HCT540	
	RCA	**CD74HCT540**	1149
	SPI	SP74HCT540	
	SGS	M74HCT540	
	Signetics	**74HCT540**	1159
	SSS	SS74HCT540	
	Toshiba	**TC74HCT540**	1363
	Universal	US74HCT540	
	Zytrex	ZX74HCT540-2	
SN74HCT541	CTI	74HCT541	
	Hitachi	HD74HCT541	
	Micrel	MIC74HCT541	
	MicroTech	74HCTR541	
	Mitel	MD74HCT541	
	Motorola	MC74HCT541	
	Plessey	MV74HCT541	
	RCA	**CD74HCT541**	1149
	SPI	SP74HCT541	
	SGS	M74HCT541	
	Signetics	**74HCT541**	1159
	SSS	SS74HCT541	
	Toshiba	**TC74HCT541**	1363
	Universal	US74HCT541	
	Zytrex	ZX74HCT541-2	
SN74HCT563	CTI	74HCT563	
	Hitachi	HD74HCT563	
	Micrel	MIC74HCT563	
	MicroTech	74HCTR563	
	Motorola	MC74HCT563	
	Plessey	MV74HCT563	
	RCA	**CD74HCT563**	1150
	SGS	M74HCT563	
	Signetics	**74HCT563**	1159
	SSS	SS74HCT563	

(Continued)

◆ Discontinued

Bold face device numbers indicate manufacturers data is provided in the IC Master on the pages noted.

ALTERNATE SOURCE DIRECTORY

Texas Instruments (Cont'd)

Manufacturer Device	Replacement Source	Device	IC Master Page
SN74HCT563	**Toshiba**	**TC74HCT563**	**1363**
	Universal	US74HCT563	
SN74HCT564	CTI	74HCT564	
	Hitachi	HD74HCT564	
	Micrel	MIC74HCT564	
	MicroTech	74HCTR564	
	Motorola	MC74HCT564	
	Plessey	MV74HCT564	
		MV74HCT573	
	RCA	CD74HCT564	
	SGS	M74HCT564	
	Signetics	**74HCT564**	**1159**
	SSS	SS74HCT564	
	Toshiba	**TC74HCT564**	**1363**
	Universal	US74HCT564	
SN74HCT573	CTI	74HCT573	
	Hitachi	HD74HCT573	
	Micrel	MIC74HCT573	
	MicroTech	74HCTR573	
	Mitel	MD74HCT573	
	Motorola	MC74HCT573	
	RCA	**CD74HCT573**	**1150**
	SPI	SP74HCT573	
	SGS	M74HCT573	
	Signetics	**74HCT573**	**1159**
	SSS	SS74HCT573	
	Toshiba	TC74HCT573	
	Universal	US74HCT573	
SN74HCT574	CTI	74HCT574	
	Hitachi	HD74HCT574	
	MicroTech	74HCTR574	
	Mitel	MD74HCT574	
	Motorola	MC74HCT574	
	Plessey	MV74HCT574	
	RCA	CD74HCT574	
	SPI	SP74HCT574	
	SGS	M74HCT574	
	Signetics	**74HCT574**	**1159**
	SSS	SS74HCT574	
	Toshiba	**TC74HCT574**	**1363**
	Universal	US74HCT574	
		US75HCT574	
SN74HCT620	MicroTech	74HCTR620	
SN74HCT623	MicroTech	74HCTR623	
SN74HCT640	Hitachi	HD74HCT640	
	MicroTech	74HCTR640	
	Motorola	MC74HCT640	
	Nitron	NC74HCT640	
	RCA	**CD74HCT640**	**1149**
	SGS	M74HCT640	
	Signetics	**74HCT640**	**1159**
	SSS	SS74HCT640	
	Toshiba	**TC74HCT640**	**1363**
	Universal	US74HCT640	
	Zytrex	ZX74HCT640-2	
SN74HCT643	Hitachi	HD74HCT643	
	MicroTech	74HCTR643	
	Motorola	MC74HCT643	
	RCA	**CD74HCT643**	**1149**
	SGS	M74HCT643	
	Signetics	**74HCT643**	**1159**
	Toshiba	**TC74HCT643**	**1363**
	Universal	US74HCT643	
	Zytrex	ZX74HCT643-2	
SN74HCT645	Signetics	74HCT645	
	SSS	SS74HCT645	
SN74HCT646	Hitachi	HD74HCT646	
	Nitron	NC74HCT646	
	RCA	**CD74HCT646**	**1149**
	SGS	M74HCT646	
	Signetics	**74HCT646**	**1159**
	Toshiba	**TC74HCT646**	**1363**
	Universal	US74HCT646	
SN74HCT648	Hitachi	HD74HCT648	
	RCA	**CD74HCT648**	**1149**
	SGS	M74HCT648	
	Signetics	**74HCT648**	**1159**
	Toshiba	**TC74HCT648**	**1363**
	Universal	US74HCT648	
SN74HCT651	Hitachi	HD74HCT651	
	Motorola	MC74HCT651	
	Toshiba	**TC74HCT651**	**1363**
SN74HCT652	Hitachi	HD74HCT652	
	Motorola	MC74HCT652	
	Toshiba	**TC74HCT652**	**1363**
SN74HCT658	Motorola	MC74HCT658	
SN74HCT659	Motorola	MC74HCT659	
SN74HCT665	Motorola	MC74HCT665	
SN74HCT9510	AMD	AM29510	
		AMD29510	
		(Continued)	
SN74HCT9510	AMD	AMD29L510	
	AD	ADSP1010	
		ADSP1010A	
	Cypress	CY7C510	
	IDT	**IDT7210**	**1084,1088**
	LogicDev	LMA1010	
	MicroPwr	**MP1010**	**688**
	TI	74HCT9510	
	TRW-LSI	TDC1010	
		TDC2010	
		TMC2010	
		TMC2110	
	Weitek	WTL1010	
		WTL2010	
		WTL2044	
		WTL2245	
◆SN74L00	National	DM74L00	
◆SN74L01	National	DM74L01	
◆SN74L02	National	DM74L02	
◆SN74L03	National	DM74L03	
◆SN74L04	National	DM74L04	
◆SN74L10	National	DM74L10	
◆SN74L157	National	DM74L157A	
◆SN74L164	National	DM74L164	
		DM86L70	
◆SN74L192	National	DM74L192	
		DM85L60	
◆SN74L193	National	DM74L193	
		DM85L63	
◆SN74L20	National	DM74L20	
◆SN74L30	National	DM74L30	
◆SN74L42	National	DM74L42A	
◆SN74L51	National	DM74L51	
◆SN74L54	National	DM74L54	
◆SN74L55	National	DM74L55	
◆SN74L71	National	DM74L71	
◆SN74L72	National	DM74L72	
◆SN74L73	National	DM74L73	
◆SN74L74	National	DM74L74	
◆SN74L75	National	DM74L75	
◆SN74L78	National	DM74L78	
◆SN74L85	National	DM74L85	
◆SN74L86	National	DM74L86	
◆SN74L90	National	DM74L90	
◆SN74L91	National	DM74L91	
◆SN74L93	National	DM74L93	
◆SN74L95	National	DM74L95	
SN74LS00	**Fairchild**	**74LS00**	**5311**
	Hitachi	HD74LS00	
	Motorola	**SN74LS00**	**1122**
	National	DM74LS00	
	Panasonic	DN74LS00	
	SGS	T74LS00	
	Signetics	**74LS00**	**1156**
SN74LS01	Fairchild	74LS01	
	Hitachi	HD74LS01	
	Motorola	**SN74LS01**	**1122**
	National	DM74LS01	
	Panasonic	DN74LS01	
	Signetics	**74LS01**	**1156**
SN74LS02	**Fairchild**	**74LS02**	**5311**
	Hitachi	HD74LS02	
	Motorola	**SN74LS02**	**1122**
	National	DM74LS02	
	Panasonic	DN74LS02	
	SGS	T74LS02	
	Signetics	**74LS02**	**1156**
SN74LS03	**Fairchild**	**74LS03**	**5311**
	Hitachi	HD74LS03	
	Motorola	**SN74LS03**	**1122**
	National	DM74LS03	
	Panasonic	DN74LS03	
	SGS	T74LS03	
SN74LS04	**Fairchild**	**74LS04**	**5311**
	Hitachi	HD74LS04	
	Motorola	**SN74LS04**	**1124**
	National	DM74LS04	
	Panasonic	DN74LS04	
	SGS	T74LS04	
	Signetics	**74LS04**	**1156**
SN74LS05	**Fairchild**	**74LS05**	**5311**
	Hitachi	HD74LS05	
	Motorola	**SN74LS05**	**1124**
	National	DM74LS05	
	Panasonic	DN74LS05	
	SGS	T74LS05	
	Signetics	**74LS05**	**1156**
SN74LS08	**Fairchild**	**74LS08**	**5311**
	Hitachi	HD74LS08	
	Motorola	**SN74LS08**	**1122**
	National	DM74LS08	
	Panasonic	DN74LS08	
		(Continued)	
SN74LS08	SGS	T74LS08	
	Signetics	**74LS08**	**1156**
SN74LS09	**Fairchild**	**74LS09**	**5311**
	Hitachi	HD74LS09	
	Motorola	**SN74LS09**	**1122**
	National	DM74LS09	
	Panasonic	DN74LS09	
	SGS	T74LS09	
SN74LS10	**Fairchild**	**74LS10**	**5311**
	Hitachi	HD74LS10	
	Motorola	**SN74LS10**	**1122**
	National	DM74LS10	
	Panasonic	DN74LS10	
	SGS	T74LS10	
	Signetics	**74LS10**	**1156**
SN74LS109A	**Fairchild**	**74LS109**	**5311**
	Hitachi	HD74LS109	
	Motorola	SN74LS109	
		SN74LS109A	**1126**
	National	DM74LS109	
	Panasonic	DN74LS109	
	SGS	T74LS109	
	Signetics	**74LS109**	**1156**
SN74LS11	**Fairchild**	**74LS11**	**5311**
	Hitachi	HD74LS11	
	Motorola	**SN74LS11**	**1122**
	National	DM74LS11	
	Panasonic	DN74LS11	
	SGS	T74LS11	
	Signetics	**74LS11**	**1156**
◆SN74LS112	**Fairchild**	**74LS112**	**5311**
	Hitachi	HD74LS112	
	Motorola	**SN74LS112A**	**1126**
	National	DM74LS112	
	Panasonic	DN74LS112	
	SGS	T74LS112	
	Signetics	**74LS112**	**1156**
	TI	SN74LS112A	
SN74LS112A	**Fairchild**	**74LS112**	**5311**
	Hitachi	HD74LS112	
	Motorola	**SN74LS112A**	**1126**
	National	DM74LS112	
	Panasonic	DN74LS112	
	SGS	T74LS112	
	Signetics	**74LS112**	**1156**
◆SN74LS113	**Fairchild**	**74LS113**	**5311**
	Hitachi	HD74LS113	
	Motorola	**SN74LS113A**	**1126**
	National	DM74LS113	
	Panasonic	DN74LS113	
	SGS	T74LS113	
	Signetics	**74LS113**	**1156**
	TI	SN74LS113A	
SN74LS113A	**Fairchild**	**74LS113**	**5311**
	Hitachi	HD74LS113	
	Motorola	**SN74LS113A**	**1126**
	National	DM74LS113	
	Panasonic	DN74LS113	
	SGS	T74LS113	
	Signetics	**74LS113**	**1156**
SN74LS114A	**Fairchild**	**74LS114**	**5311**
	Hitachi	HD74LS114	
	Motorola	**SN74LS114A**	**1126**
	National	DM74LS114	
	Panasonic	DN74LS114	
	SGS	T74LS114	
SN74LS12	Hitachi	HD74LS12	
	Motorola	**SN74LS12**	**1122**
	National	DM74LS12	
	Panasonic	DN74LS12	
	Signetics	74LS12	
SN74LS122	**Motorola**	**SN74LS122**	**1131**
	National	DM74LS122	
SN74LS123	Hitachi	HD74LS123	
	Motorola	**SN74LS123**	**1131**
	National	DM74LS123	
	Panasonic	DN74LS123	
◆SN74LS125	Fairchild	74LS125A	
	Motorola	**SN74LS125A**	**1124**
	National	DM74LS125	
	Panasonic	DN74LS125A	
	SGS	T74LS125	
	Signetics	**74LS125A**	**1157**
	TI	SN74LS125A	
SN74LS125A	Fairchild	74LS125A	
	Motorola	**SN74LS125A**	**1124**
	National	DM74LS125	
	Panasonic	DN74LS125A	
	SGS	T74LS125	
	Signetics	**74LS125A**	**1157**
◆SN74LS126	**Fairchild**	**74LS126**	**5311**
	Motorola	**SN74LS126A**	**1124**
		(Continued)	
◆SN74LS126	National	DM74LS126	
	SGS	T74LS126	
	Signetics	**74LS126A**	**1157**
	TI	SN74LS126A	
SN74LS126A	**Fairchild**	**74LS126**	**5311**
	Motorola	**SN74LS126A**	**1124**
	National	DM74LS126	
	SGS	T74LS126	
	Signetics	**74LS126A**	**1157**
SN74LS13	**Fairchild**	**74LS13**	**5311**
	Hitachi	HD74LS13	
	Motorola	**SN74LS13**	**1125**
	National	DM74LS13	
	Panasonic	DN74LS13	
	SGS	T74LS13	
	Signetics	**74LS13**	**1156**
SN74LS132	**Fairchild**	**74LS132**	**5311**
	Hitachi	HD74LS132	
	Motorola	**SN74LS132**	**1125**
	National	DM74LS132	
	Panasonic	DN74LS132	
	SGS	T74LS132	
	Signetics	**74LS132**	**1157**
SN74LS136	**Fairchild**	**74LS136**	**5311**
	Hitachi	HD74LS136	
	Motorola	**SN74LS136**	**1123**
	National	DM74LS136	
	Panasonic	DN74LS136	
	SGS	T74LS136	
	Signetics	**74LS136**	**1157**
SN74LS137	**Motorola**	**SN74LS137**	**1130**
SN74LS138	**Fairchild**	**74LS138**	**5311**
	Hitachi	HD74LS138	
	Motorola	**SN74LS138**	**1130**
	National	DM74LS138	
	Panasonic	DN74LS138	
	SGS	T74LS138	
	Signetics	**74LS138**	**1157**
SN74LS139A	**Fairchild**	**74LS139**	**5311**
	Hitachi	HD74LS139	
	Motorola	**SN74LS139**	**1130**
	National	DM74LS139	
	Panasonic	DN74LS139	
	SGS	T74LS139	
	Signetics	**74LS139**	**1157**
SN74LS14	**Fairchild**	**74LS14**	**5311**
	Hitachi	HD74LS14	
	Motorola	**SN74LS14**	**1125**
	National	DM74LS14	
	Panasonic	DN74LS14	
	Signetics	**74LS14**	**1156**
SN74LS145	Fairchild	74LS145	
	Motorola	**SN74LS145**	**1130**
	Panasonic	DN74LS145	
SN74LS147	**Motorola**	**SN74LS147**	**1131**
SN74LS148	Hitachi	HD74LS148	
	Motorola	**SN74LS148**	**1131**
SN74LS15	**Fairchild**	**74LS15**	**5311**
	Motorola	**SN74LS15**	**1122**
	National	DM74LS15	
	Panasonic	DN74LS15	
	SGS	T74LS15	
SN74LS151	**Fairchild**	**74LS151**	**5311**
	Hitachi	HD74LS151	
		HD74LS151A	
	Motorola	**SN74LS151**	**1129**
	National	DM74LS151	
	Panasonic	DN74LS151	
	SGS	T74LS151	
	Signetics	**74LS151**	**1157**
SN74LS152	SGS	T74LS152	
SN74LS153	**Fairchild**	**74LS153**	**5311**
	Hitachi	HD74LS153	
	Motorola	**SN74LS153**	**1129**
	National	DM74LS153	
	Panasonic	DN74LS153	
	SGS	T74LS153	
	Signetics	**74LS153**	**1157**
SN74LS155A	**Fairchild**	**74LS155**	**5311**
	Hitachi	HD74LS155	
	Motorola	**SN74LS155**	**1130**
	National	DM74LS155	
	Panasonic	DN74LS155	
	Signetics	**74LS155**	**1157**
SN74LS156	**Fairchild**	**74LS156**	**5311**
	Hitachi	HD74LS156	
	Motorola	**SN74LS156**	**1130**
	National	DM74LS156	
	Panasonic	DN74LS156	
	SGS	T74LS156	
	Signetics	**74LS156**	**1157**

◆ Discontinued

The manufacturers report their devices can be used as direct replacements.
Performance details often differ, so compare the specifications considering your requirements.

Texas Instruments (Cont'd)

Manufacturer Device	Replacement Source	Device	IC Master Page
SN74LS157	**Fairchild**	**74LS157**	5311
	Hitachi	HD74LS157	
	Motorola	**SN74LS157**	1129
	National	DM74LS157	
	Panasonic	DN74LS157	
	SGS	T74LS157	
	Signetics	**74LS157**	1157
SN74LS158	**Fairchild**	**74LS158**	5311
	Hitachi	HD74LS158	
	Motorola	**SN74LS158**	1129
	National	DM74LS158	
	Panasonic	DN74LS158	
	SGS	T74LS158	
	Signetics	**74LS158**	1157
SN74LS160A	**Fairchild**	**74LS160**	5311
	Hitachi	HD74LS160A	
	Motorola	**SN74LS160A**	1127
	National	DM74LS160	
	Panasonic	DN74LS160A	
	SGS	T74LS160	
	Signetics	74LS160	
		74LS160A	1157
SN74LS161A	Fairchild	74LS161A	
	Hitachi	HD74LS161A	
	Motorola	**SN74LS161A**	1127
	National	DM74LS161	
	Panasonic	DN74LS161A	
	SGS	T74LS161	
	Signetics	**74LS161A**	1157
◆SN74LS162	**Fairchild**	**74LS162**	5311
	Hitachi	HD74LS162A	
	Motorola	**SN74LS162A**	1127
	National	DM74LS162	
	Panasonic	DN74LS162A	
	SGS	T74LS162	
	Signetics	**74LS162A**	1157
	TI	SN74LS162A	
SN74LS162A	**Fairchild**	**74LS162**	5311
	Hitachi	HD74LS162A	
	Motorola	**SN74LS162A**	1127
	National	DM74LS162	
	Panasonic	DN74LS162A	
	SGS	T74LS162	
	Signetics	**74LS162A**	1157
◆SN74LS163	**Fairchild**	**74LS163**	5311
	Hitachi	HD74LS163	
		HD74LS163A	
	Motorola	**SN74LS163A**	1127
	National	DM74LS163	
	Panasonic	DN74LS163A	
	SGS	T74LS163	
	Signetics	**74LS163A**	1157
	TI	SN74LS163A	
SN74LS163A	**Fairchild**	**74LS163**	5311
	Hitachi	HD74LS163	
		HD74LS163A	
	Motorola	**SN74LS163A**	1127
	National	DM74LS163	
	Panasonic	DN74LS163A	
	SGS	T74LS163	
	Signetics	**74LS163A**	1157
SN74LS164	**Fairchild**	**74LS164**	5311
	Hitachi	HD74LS164	
	Motorola	SN74LS164A	
	National	DM74LS164	
	Panasonic	DN74LS164	
	SGS	T74LS164	
	Signetics	**74LS164**	1157
		74LS164A	
SN74LS165A	**Fairchild**	**74LS165**	5311
	Motorola	**SN74LS165**	1128
	SGS	T74LS165	
SN74LS166A	**Motorola**	**SN74LS166**	1128
SN74LS169	**Fairchild**	**74LS169**	5311
	Hitachi	HD74LS169	
	Motorola	**SN74LS169**	1127
	National	DM74LS169	
	SGS	T74LS169	
	Signetics	**74LS169A**	1157
SN74LS170	**Fairchild**	**74LS170**	5311
	Motorola	**SN74LS170**	1128
	National	DM74LS170	
	Panasonic	DN74LS170	
	SGS	T74LS170	
	Signetics	**74LS170**	1157
SN74LS173A	Fairchild	74LS173	
	Motorola	**SN74LS173A**	1126
	National	DM74LS173	
	Panasonic	DN74LS173	
SN74LS173A	SGS	T74LS173	
	Signetics	**74LS173**	1157,1158
SN74LS174	**Fairchild**	**74LS174**	5311
	Hitachi	HD74LS174	
	Motorola	**SN74LS174**	1126
	National	DM74LS174	
	Panasonic	DN74LS174	
	SGS	T74LS174	
	Signetics	**74LS174**	1157
SN74LS175	**Fairchild**	**74LS175**	5311
	Hitachi	HD74LS175	
	Motorola	**SN74LS175**	1126
	Panasonic	DN74LS175	
	SGS	T74LS175	
	Signetics	74LS175	
SN74LS181	**Fairchild**	**74LS181**	5311
	Hitachi	HD74LS181	
	Motorola	**SN74LS181**	1132
	SGS	T74LS181	
	Signetics	**74LS181**	1157
SN74LS183	**Motorola**	**SN74LS183**	1132
◆SN74LS189	Cypress	CY74S189	
	Fairchild	74LS189	
	National	DM74LS189	
	TI	SN74LS189A	
SN74LS189A	Cypress	CY74S189	
	Fairchild	74LS189	
	National	DM74LS189	
SN74LS190	Fairchild	74LS190	
	Hitachi	HD74LS190	
	Motorola	**SN74LS190**	1127
	National	DM74LS190	
	Panasonic	DN74LS190	
	SGS	T74LS190	
SN74LS191	Fairchild	74LS191	
	Hitachi	HD74LS191	
	Motorola	**SN74LS191**	1127
	National	DM74LS191	
	Panasonic	DN74LS191	
	SGS	T74LS191	
	Signetics	**74LS191**	1157
SN74LS192	**Fairchild**	**74LS192**	5311
	Hitachi	HD74LS192	
	Motorola	**SN74LS192**	1127
	National	DM74LS192	
	Panasonic	DN74LS192	
	SGS	T74LS192	
	Signetics	**74LS192**	1157
SN74LS193	**Fairchild**	**74LS193**	5311
	Hitachi	HD74LS193	
	Motorola	**SN74LS193**	1127
	National	DM74LS193	
	Panasonic	DN74LS193	
	SGS	T74LS193	
	Signetics	**74LS193**	1157
SN74LS194A	**Fairchild**	**74LS194A**	5311
	Hitachi	HD74LS194A	
	Motorola	**SN74LS194A**	1128
	National	DM74LS194	
	Panasonic	DN74LS194A	
	SGS	T74LS194A	
	Signetics	**74LS194A**	1157
◆SN74LS195	Fairchild	93L00	
SN74LS195A	**Fairchild**	**74LS195A**	5311
	Hitachi	HD74LS195A	
	Motorola	**SN74LS195A**	1128
	National	DM74LS195	
	Panasonic	DN74LS195A	
	SGS	L7924	
		T74LS195A	
	Signetics	**74LS195A**	1157
SN74LS196	**Fairchild**	**74LS196**	5311
	Hitachi	HD74LS196	
	Motorola	**SN74LS196**	1127
	National	DM74LS196	
	Panasonic	DN74LS196	
	SGS	574LS196	
	Signetics	N82S80	
SN74LS197	**Fairchild**	**74LS197**	5311
	Hitachi	HD74LS197	
	Motorola	**SN74LS197**	1127
	National	DM74LS197	
	Panasonic	DN74LS197	
	SGS	T74LS197	
	Signetics	**74LS197**	1157
SN74LS20	**Fairchild**	**74LS20**	5311
	Hitachi	HD74LS20	
	Motorola	**SN74LS20**	1122
	National	DM74LS20	
	Panasonic	DN74LS20	
SN74LS20	SGS	T74LS20	
	Signetics	**74LS20**	1156
SN74LS21	**Fairchild**	**74LS21**	5311
	Hitachi	HD74LS21	
	Motorola	**SN74LS21**	1122
	National	DM74LS21	
	Panasonic	DN74LS21	
	SGS	T74LS21	
	Signetics	**74LS21**	1156
SN74LS22	Fairchild	74LS22	
	Hitachi	HD74LS22	
	Motorola	**SN74LS22**	1122
	National	DM74LS22	
	Panasonic	DN74LS22	
	SGS	T74LS22	
SN74LS221	Fairchild	74LS221	
	Hitachi	HD74LS221	
	Motorola	**SN74LS221**	1131
	National	DM74LS221	
SN74LS240	**Fairchild**	**74LS240**	5311
	Hitachi	HD74LS240	
	MMI	SN74LS240	
	Motorola	**SN74LS240**	1124
	Panasonic	DN74LS240	
	SGS	T74LS240	
	Signetics	**74LS240**	1157
SN74LS241	**Fairchild**	**74LS241**	5311
	Hitachi	HD74LS241	
	MMI	SN74LS241	
	Motorola	**SN74LS241**	1124
	Panasonic	DN74LS241	
	SGS	T74LS241	
	Signetics	**74LS241**	1157
SN74LS242	Fairchild	74LS242A	
	Motorola	**SN74LS242**	1124
	Signetics	**74LS242**	1158
SN74LS243	Fairchild	74LS243A	
	Motorola	**SN74LS243**	1124
	Signetics	**74LS243**	1158
SN74LS244	**Fairchild**	**74LS244**	5311
	Hitachi	HD74LS244	
	MMI	SN74LS244	
	Motorola	**SN74LS244**	1124
	Panasonic	DN74LS244	
	SGS	T74LS244	
	Signetics	**74LS244**	1158
SN74LS247	**Fairchild**	**74LS247**	5311
	Hitachi	HD74LS247	
	Motorola	**SN74LS247**	1130
	National	DM74LS247	
SN74LS248	**Fairchild**	**74LS248**	5311
	Hitachi	HD74LS248	
	Motorola	**SN74LS248**	1130
	National	DM74LS248	
	SGS	T74LS248	
SN74LS249	**Fairchild**	**74LS249**	5311
	Hitachi	HD74LS249	
	Motorola	**SN74LS249**	1130
	National	DM74LS249	
	SGS	T74LS249	
SN74LS251	**Fairchild**	**74LS251**	5311
	Hitachi	HD74LS251	
	Motorola	**SN74LS251**	1129
	National	DM74LS251	
	Panasonic	DN74LS251	
	SGS	T74LS251	
	Signetics	**74LS251**	1158
SN74LS253	**Fairchild**	**74LS253**	5311
	Hitachi	HD74LS253	
	Motorola	**SN74LS253**	1129
	National	DM74LS253	
		DM8214	
	Panasonic	DN74LS253	
	SGS	T74LS253	
	Signetics	**74LS253**	1158
SN74LS256	SGS	T74LS256	
◆SN74LS257A	Fairchild	74LS257A	
	Hitachi	HD74LS257	
	Motorola	**SN74LS257A**	1129
	National	DM74LS257	
	SGS	T74LS257	
	Signetics	74LS257	
		74LS257A	1158
	TI	SN74LS257B	
SN74LS257B	Fairchild	74LS257A	
	Hitachi	HD74LS257	
	Motorola	**SN74LS257A**	1129
	National	DM74LS257	
	SGS	T74LS257	
	Signetics	74LS257	
		74LS257A	1158
◆SN74LS258A	Fairchild	74LS258A	
	Hitachi	HD74LS258	
	Motorola	**SN74LS258A**	1129
	National	DM74LS258	
	Panasonic	DN74LS258A	
	SGS	T74LS258	
	Signetics	74LS258	
	TI	SN74LS258B	
SN74LS258B	Fairchild	74LS258A	
	Hitachi	HD74LS258	
	Motorola	**SN74LS258A**	1129
	National	DM74LS258	
	Panasonic	DN74LS258A	
	SGS	T74LS258	
	Signetics	74LS258	
SN74LS259B	**Fairchild**	**74LS259**	5311
	Motorola	**SN74LS259**	1126
	SGS	T74LS259	
	Signetics	**74LS259**	1158
SN74LS26	**Fairchild**	**74LS26**	5311
	Hitachi	HD74LS26	
	Motorola	**SN74LS26**	1122
	National	DM74LS26	
	Panasonic	DN74LS26	
	SGS	T74LS26	
	Signetics	**74LS26**	1156
SN74LS260	Panasonic	DN74LS260	
	SGS	T74LS260	
SN74LS266	**Fairchild**	**74LS266**	5311
	Motorola	**SN74LS266**	1123
	National	DM74LS266	
	Panasonic	DN74LS266	
	Raytheon	RC8242	
	SGS	T74LS266	
	Signetics	**74LS266**	1158
		N8242	1175
SN74LS27	**Fairchild**	**74LS27**	5311
	Hitachi	HD74LS27	
	Motorola	**SN74LS27**	1122
	National	DM74LS27	
	Panasonic	DN74LS27	
	SGS	T74LS27	
	Signetics	**74LS27**	1156
SN74LS273	**Fairchild**	**74LS273**	5311
	MMI	SN74LS273	
	Motorola	**SN74LS273**	1126
	SGS	T74LS273	
	Signetics	74LS273	
SN74LS279A	**Fairchild**	**74LS279**	5311
	Hitachi	HD74LS279	
	Motorola	**SN74LS279**	1126
	National	DM74LS279	
	Panasonic	DN74LS279	
	SGS	T74LS279	
	Signetics	74LS279	
SN74LS28	**Fairchild**	**74LS28**	5311
	Motorola	**SN74LS28**	1122
	SGS	T74LS28	
SN74LS280	Hitachi	HD74LS280	
	Motorola	**SN74LS280**	1132
	Panasonic	DN74LS280	
	SGS	T74LS280	
SN74LS283	**Fairchild**	**74LS283**	5311
	Hitachi	HD74LS283	
		HD74LS283A	
	Motorola	**SN74LS283**	1132
	National	DM74LS283	
	Panasonic	DN74LS283	
	SGS	T74LS283	
	Signetics	**74LS283**	1158
◆SN74LS289	Fairchild	74LS289	
	National	DM74LS289	
	TI	SN74LS289A	
SN74LS289A	Fairchild	74LS289	
	National	DM74LS289	
SN74LS290	**Fairchild**	**74LS290**	5311
	Hitachi	HD74LS290	
	Motorola	**SN74LS290**	1127
	National	DM74LS290	
	Panasonic	DN74LS290	
	SGS	T74LS290	
	Signetics	**74LS290**	1158
SN74LS292	SGS	T74LS292	
SN74LS293	**Fairchild**	**74LS293**	5311
	Hitachi	HD74LS293	
	Motorola	**SN74LS293**	1127
	National	DM74LS293	
	Panasonic	DN74LS293	
	SGS	T74LS293	
	Signetics	**74LS293**	1158
SN74LS295B	**Fairchild**	**74LS295A**	5311
	Motorola	**SN74LS295A**	1129

(Continued)

◆ Discontinued

Bold face device numbers indicate manufacturers data is provided in the IC Master on the pages noted.

Texas Instruments (Cont'd)

Manufacturer Device	Replacement Source	Device	IC Master Page
SN74LS295B	SGS	T74LS295A	
	Signetics	74LS295A	
		74LS295B	**1158**
SN74LS298	**Fairchild**	**74LS298**	**5311**
	Hitachi	HD74LS298	
	Motorola	**SN74LS298**	**1129**
	SGS	T74LS298	
	Signetics	**74LS298**	**1158**
SN74LS299	AMD	SN74LS299	
	Fairchild	**74LS299**	**5311**
	Hitachi	HD74LS299	
	Motorola	**SN74LS299**	**1129**
	SGS	T74LS299	
SN74LS30	**Fairchild**	**74LS30**	**5311**
	Hitachi	HD74LS30	
	Motorola	**SN74LS30**	**1122**
	National	DM74LS30	
	Panasonic	DN74LS30	
	SGS	T74LS30	
	Signetics	**74LS30**	**1156**
◆SN74LS322	AMD	SN74LS322	
	Fairchild	**74LS322**	**5311**
	Motorola	SN74LS322	
	TI	SN74LS322A	
SN74LS322A	AMD	SN74LS322	
	Fairchild	**74LS322**	**5311**
	Motorola	SN74LS322	
SN74LS323	AMD	SN74LS323	
	Fairchild	**54LS323**	**614**
		74LS323	**5311**
	Motorola	**SN74LS323**	**1129**
	TI	**SN54LS323**	**715**
SN74LS33	**Fairchild**	**74LS33**	**5311**
	Motorola	**SN74LS33**	**1122**
	Panasonic	DN74LS33	
	SGS	T74LS33	
	Signetics	**74LS33**	**1156**
◆SN74LS347	**Fairchild**	**74LS347**	**5311**
SN74LS352	**Fairchild**	**74LS352**	**5311**
	Motorola	**SN74LS352**	**1129**
	National	DM74LS352	
	SGS	T74LS352	
SN74LS353	**Fairchild**	**74LS353**	**5311**
	Motorola	**SN74LS353**	**1129**
	National	DM74LS353	
	SGS	T74LS353	
SN74LS365A	Fairchild	74LS365A	
	Motorola	**SN74LS365A**	**1124**
	National	DM74LS365	
	Panasonic	DN74LS365A	
	SGS	T74LS365	
		T74LS365A	
	Signetics	74LS365	
		74LS365A	**1158**
SN74LS366A	Fairchild	74LS366A	
	Motorola	**SN74LS366A**	**1124**
	National	DM74LS366	
	Panasonic	DN74LS366A	
	SGS	T74LS366	
		T74LS366A	
	Signetics	**74LS366A**	**1158**
SN74LS367A	Fairchild	74LS367A	
	Hitachi	HD74LS367	
		HD74LS367A	
	Motorola	**SN74LS367A**	**1124**
	National	DM74LS367	
	Panasonic	DN74LS367A	
	SGS	T74LS367	
		T74LS367A	
	Signetics	74LS367	
		74LS367A	**1158**
SN74LS368A	Fairchild	74LS368A	
	Hitachi	HD74LS368	
	Motorola	**SN74LS368A**	**1124**
	National	DM74LS368	
	Panasonic	DN74LS368A	
	SGS	T74LS368	
	Signetics	74LS368	
		74LS368A	**1158**
SN74LS37	**Fairchild**	**74LS37**	**5311**
	Hitachi	HD74LS37	
	Motorola	**SN74LS37**	**1122**
	National	DM74LS37	
	Panasonic	DN74LS37	
	SGS	T74LS37	
	Signetics	**74LS37**	**1156**
SN74LS373	**Fairchild**	**74LS373**	**5311**
	MMI	SN74LS373	
	Motorola	**SN74LS373**	**1126**
	Panasonic	DN74LS373	
		(Continued)	
SN74LS373	SGS	T74LS373	
	Signetics	**74LS373**	**1158**
SN74LS374	**Fairchild**	**74LS374**	**5311**
	MMI	SN74LS374	
	Motorola	**SN74LS374**	**1126**
	National	DM74LS374	
	SGS	T74LS374	
	Signetics	**74LS374**	**1158**
SN74LS375	**Fairchild**	**74LS375**	**5311**
	Motorola	**SN74LS375**	**1126**
	Signetics	**74LS375**	**1158**
SN74LS377	**Fairchild**	**74LS377**	**5311**
	MMI	SN74LS377	
	Motorola	**SN74LS377**	**1126**
	SGS	T74LS377	
	Signetics	**74LS377**	**1158**
SN74LS378	AMD	SN74LS378	
	Fairchild	**74LS378**	**5311**
	Motorola	**SN74LS378**	**1126**
	SGS	T74LS378	
	Signetics	**74LS378**	**1158**
SN74LS379	AMD	SN74LS379	
	Fairchild	**74LS379**	**5311**
	Motorola	**SN74LS379**	**1126**
	SGS	T74LS379	
SN74LS38	**Fairchild**	**74LS38**	**5311**
	Hitachi	HD74LS38	
	Motorola	**SN74LS38**	**1122**
	National	DM74LS38	
	Panasonic	DN74LS38	
	SGS	T74LS38	
	Signetics	**74LS38**	**1156**
SN74LS381A	AMD	SN74LS381	
SN74LS384	AMD	SN74LS384	
SN74LS385	AMD	SN74LS385	
	Motorola	**SN74LS385**	**1132**
SN74LS386A	Hitachi	HD74LS386	
	Motorola	**SN74LS386**	**1123**
	National	DM74LS386	
	Panasonic	DN74LS386	
SN74LS390	**Fairchild**	**74LS390**	**5311**
	Motorola	**SN74LS390**	**1127**
	Panasonic	DN74LS390	
	SGS	T74LS390	
SN74LS393	**Fairchild**	**74LS393**	**5311**
	Motorola	**SN74LS393**	**1127**
	Panasonic	DN74LS393	
	SGS	T74LS393	
	Signetics	**74LS393**	**1158**
SN74LS395A	**Fairchild**	**74LS395**	**5311**
	National	DM74LS395	
	Panasonic	DN74LS395A	
	SGS	T74LS395	
	Signetics	74LS395	
SN74LS398	**Motorola**	**SN74LS398**	**1129**
SN74LS399	AMD	SN74LS399	
	Motorola	**SN74LS399**	**1129**
	SGS	T74LS399	
SN74LS40	**Fairchild**	**74LS40**	**5311**
	Hitachi	HD74LS40	
	Motorola	**SN74LS40**	**1122**
	National	DM74LS40	
	Panasonic	DN74LS40	
	SGS	T74LS40	
	Signetics	**74LS40**	**1156**
SN74LS42	**Fairchild**	**74LS42**	**5311**
	Hitachi	HD74LS42	
	Motorola	**SN74LS42**	**1130**
	National	DM74LS42	
	Panasonic	DN74LS42	
	SGS	T74LS42	
	Signetics	**74LS42**	**1156**
◆SN74LS445	**Signetics**	**74LS445**	**1158**
◆SN74LS447	**Fairchild**	**74LS447**	**5311**
SN74LS47	**Fairchild**	**74LS47**	**5311**
	Hitachi	HD74LS47	
	Motorola	**SN74LS47**	**1130**
	National	DM74LS47	
	SGS	T74LS47	
SN74LS48	**Fairchild**	**74LS48**	**5311**
	Hitachi	HD74LS48	
	Motorola	**SN74LS48**	**1130**
	National	DM74LS48	
	SGS	T74LS48	
	Signetics	74LS48	
SN74LS49	Fairchild	74LS49	
	Hitachi	HD74LS49	
	Motorola	**SN74LS49**	**1130**
	National	DM74LS49	
	SGS	T74LS49	
SN74LS490	**Fairchild**	**74LS490**	**5311**
	Motorola	**SN74LS490**	**1127**
		(Continued)	
SN74LS490	Panasonic	DN74LS490	
	SGS	T74LS490	
	Signetics	**74LS490**	**1159**
SN74LS51	**Fairchild**	**74LS51**	**5311**
	Hitachi	HD74LS51	
	Motorola	**SN74LS51**	**1123**
	National	DM74LS51	
	Panasonic	DN74LS51	
	SGS	T74LS51	
	Signetics	**74LS51**	**1156**
SN74LS54	**Fairchild**	**74LS54**	**5311**
	Hitachi	HD74LS54	
	Motorola	**SN74LS54**	**1123**
	National	DM74LS54	
	Panasonic	DN74LS54	
	SGS	T74LS54	
	Signetics	**74LS54**	**1156**
SN74LS540	**Fairchild**	**74LS540**	**5311**
	Motorola	**SN74LS540**	**1125**
	Signetics	**74LS540**	**1159**
SN74LS541	Fairchild	74LS541	
	Motorola	**SN74LS541**	**1125**
	Signetics	**74LS541**	**1159**
SN74LS55	**Fairchild**	**74LS55**	**5311**
	Hitachi	HD74LS55	
	Motorola	**SN74LS55**	**1123**
	National	DM74LS55	
	Panasonic	DN74LS55	
	SGS	T74LS55	
SN74LS604	**Motorola**	**SN74LS604**	**1129**
SN74LS605	**Motorola**	**SN74LS605**	**1129**
SN74LS606	**Motorola**	**SN74LS606**	**1129**
SN74LS607	**Motorola**	**SN74LS607**	**1129**
SN74LS621	**Motorola**	**SN74LS621**	**1125**
SN74LS622	**Motorola**	**SN74LS622**	**1125**
SN74LS640	**Motorola**	**SN74LS640**	**1125**
	Signetics	**74LS640**	**1159**
		N8T125	**1175**
SN74LS641	**Motorola**	**SN74LS641**	**1125**
	Signetics	**74LS641**	**1159**
SN74LS642	**Motorola**	**SN74LS642**	**1125**
	Signetics	**74LS642**	**1159**
SN74LS643	**Motorola**	**SN74LS643**	**1125**
SN74LS644	**Motorola**	**SN74LS644**	**1125**
SN74LS645	MMI	SN74LS645	
	Motorola	**SN74LS645**	**1125**
	Signetics	**74LS645**	**1159**
SN74LS645-1	MMI	74LS645-1	
	Signetics	SN74LS645-1	
SN74LS668	**Motorola**	**SN74LS668**	**1127**
SN74LS669	**Motorola**	**SN74LS669**	**1127**
SN74LS670	**Fairchild**	**74LS670**	**5311**
	Motorola	**SN74LS670**	**1128**
	National	DM74LS670	
	SGS	T74LS670	
	Signetics	74LS670	
SN74LS673	**Motorola**	**SN74LS673**	**1129**
SN74LS674	**Motorola**	**SN74LS674**	**1129**
SN74LS688	AMD	AM25LS2521	
SN74LS73A	Hitachi	HD74LS73	
	Motorola	**SN74LS73A**	**1126**
	National	DM74LS73	
	Panasonic	DN74LS73	
	Signetics	**74LS73**	**1156**
◆SN74LS74	**Fairchild**	**74LS74**	**5311**
	Hitachi	HD74LS74	
		HD74LS74A	
	Motorola	**SN74LS74A**	**1126**
	National	DM74LS74	
	Panasonic	DN74LS74A	
	SGS	T74LS74	
	Signetics	74LS74	
	TI	SN74LS74A	
SN74LS74A	**Fairchild**	**74LS74**	**5311**
	Hitachi	HD74LS74	
		HD74LS74A	
	Motorola	**SN74LS74A**	**1126**
	National	DM74LS74	
	Panasonic	DN74LS74A	
	SGS	T74LS74	
	Signetics	74LS74	
SN74LS75	Hitachi	HD74LS75	
	Motorola	**SN74LS75**	**1126**
	National	DM74LS75	
	Panasonic	DN74LS75	
	Signetics	**74LS75**	**1156**
SN74LS76A	Hitachi	HD74LS76	
	Motorola	**SN74LS76A**	**1126**
	National	DM74LS76	
	Panasonic	DN74LS76	
	Signetics	**74LS76**	**1156**
SN74LS78A	Hitachi	HD74LS78	
	Motorola	**SN74LS78A**	**1126**
	National	DM74LS78	
	Panasonic	DN74LS78	
SN74LS83A	Fairchild	74LS83A	
	Hitachi	HD74LS183A	
		HD74LS83A	
	Motorola	**SN74LS83A**	**1132**
	National	DM74LS83A	
	Panasonic	DN74LS83A	
	SGS	T74LS83	
	Signetics	74LS83	
		74LS83A	**1156**
SN74LS85	**Fairchild**	**74LS85**	**5311**
	Hitachi	HD74LS85	
	Motorola	**SN74LS85**	**1131**
	National	DM74LS85	
	Panasonic	DN74LS85	
	Signetics	**74LS85**	**1156**
SN74LS86A	**Fairchild**	**74LS86**	**5311**
	Hitachi	HD74LS86	
	Motorola	**SN74LS86**	**1123**
	National	DM74LS86	
	Panasonic	DN74LS86	
	SGS	T74LS86	
	Signetics	**74LS86**	**1156**
SN74LS90	**Fairchild**	**74LS90**	**5311**
	Motorola	**SN74LS90**	**1127**
	National	DM74LS90	
	Panasonic	DN74LS90	
	SGS	T74LS90	
	Signetics	**74LS90**	**1156**
SN74LS91	Hitachi	HD74LS91	
	Motorola	**SN74LS91**	**1128**
SN74LS92	**Fairchild**	**74LS92**	**5311**
	Hitachi	HD74LS92	
	Motorola	**SN74LS92**	**1127**
	National	DM74LS92	
	Panasonic	DN74LS92	
	SGS	T74LS92	
	Signetics	**74LS92**	**1156**
SN74LS93	**Fairchild**	**74LS93**	**5311**
	Hitachi	HD74LS93	
	Motorola	**SN74LS93**	**1127**
	National	DM74LS93	
	Panasonic	DN74LS93	
	SGS	T74LS93	
	Signetics	**74LS93**	**1156**
SN74LS95B	**Fairchild**	**74LS95B**	**5311**
	Hitachi	HD74LS95B	
	Motorola	**SN74LS95B**	**1128**
	National	DM74LS95B	
	Panasonic	DN74LS95B	
	SGS	T74LS95	
		T74LS95B	
	Signetics	**74LS95B**	**1156**
SN74LS96	**Signetics**	**74LS96**	**1156**
SN74PAL16R8A	Cypress	CYPAL16R8	
	MMI	PAL16R8	
		PAL16R8A	
	TI	TIBPAL16R8-20	
		TIBPAL16R8-25	**725,4759**
		TIBPAL16R8-30	
SN74S00	Fairchild	74S00	
	National	DM74S00	
	Signetics	**74S00**	**1156**
SN74S02	Fairchild	74S02	
	National	DM74S02	
	Signetics	**74S02**	**1156**
	TI	SN74S32	
SN74S03	Fairchild	74S03	
	National	DM74S03	
	Signetics	**74S03**	**1156**
SN74S04	Fairchild	74S04	
	National	DM74S04	
	Signetics	**74S04**	**1156**
◆SN74S05	Fairchild	74S05	
	National	DM74S05	
	Signetics	**74S05**	**1156**
SN74S08	Fairchild	74S08	
	Signetics	**74S08**	**1156**
SN74S10	Fairchild	74S10	
	National	DM74S10	
	Signetics	**74S10**	**1156**
SN74S11	Fairchild	74S11	
	National	DM74S11	
	Signetics	**74S11**	**1156**
SN74S112	Fairchild	74S112	
	Motorola	SN74S112	
	National	DM74S112	
	Signetics	**74S112**	**1156**

◆ Discontinued

The manufacturers report their devices can be used as direct replacements.
Performance details often differ, so compare the specifications considering your requirements.

Texas Instruments (Cont'd)

Manufacturer Device	Replacement Source	Device	IC Master Page
SN74S113	Fairchild	74S113	
	National	DM74S113	
	Signetics	**74S113**	**1156**
SN74S114	National	DM74S114	
SN74S132	Fairchild	74S132	
SN74S133	Fairchild	74S133	
	National	DM74S133	
	Signetics	**74S133**	**1157**
SN74S134	National	DM74S134	
	Signetics	**74S134**	**1157**
SN74S135	Fairchild	74S135	
	National	DM74S135	
	Signetics	**74S135**	**1157**
SN74S138	AMD	SN74S138	
	Fairchild	74S138	
	National	DM74S138	
	Signetics	**74S138**	**1157**
SN74S140	Fairchild	74S140	
	National	DM74S140	
	Signetics	**74S140**	**1157**
SN74S15	Fairchild	74S15	
	National	DM74S15	
SN74S168	Signetics	74S168	
SN74S169	Signetics	74S169	
SN74S182	Fairchild	74S182	
	MMI	SN74S182	
	National	DM74S182	
	Signetics	**74S182**	**1157**
SN74S189B	AMD	AM27LS03	
		AM27S03	
		SN74S189	
	Cypress	CY27S03	
		CY74S189	
		CY7C189	
		CY7CS189	
	Fairchild	74S189	
		93405	
	National	DM74S189	
		DM7599	
		DM8599	
SN74S196	Signetics	74S196	
SN74S197	Signetics	74S197	
SN74S20	Fairchild	74S20	
	National	DM74S20	
	Signetics	**74S20**	**1156**
SN74S22	Fairchild	74S22	
	National	DM74S22	
SN74S225	MMI	74S225A	
SN74S244	MMI	SN74S244	
SN74S251	AMD	SN74S251	
	National	DM74S251	
	Signetics	**74S251**	**1158**
SN74S280	National	DM74S280	
	Signetics	**74S280**	**1158**
SN74S281	National	DM74S281	
SN74S289B	Fairchild	7489	
	National	DM7489	
		DM74S289	
		DM8589	
		MM74S289	
	Signetics	74S289	
		N82S25	
SN74S30	Fairchild	74S30	
	National	DM74S30	
SN74S32	Fairchild	74S02	
	National	DM74S02	
	Signetics	**74S02**	**1156**
	TI	SN74S02	
SN74S350	AMD	AM25S10	
SN74S37	**Signetics**	**74S37**	**1156**
SN74S373	MMI	SN74S373	
	Signetics	**74S373**	**1158**
SN74S374	MMI	SN74S374	
	Signetics	**74S374**	**1158**
SN74S40	Fairchild	74S40	
	National	DM74S40	
	Signetics	**74S40**	**1156**
SN74S428	AMD	8228	
	Intel	8228	
	National	DP8228	
		INS8228	
	NEC	μPB8228	
	TI	TIM8228	
SN74S51	Fairchild	74S51	
	National	DM74S51	
	Signetics	**74S51**	**1156**
SN74S65	Fairchild	74S65	
	National	DM74S65	
SN74S74	Fairchild	74S74	
	Hitachi	HD74S74	
			(Continued)
SN74S74	National	DM74S74	
	Signetics	**74S74**	**1156**
SN74S85	**Signetics**	**74S85**	**1156**
SN74S86	Fairchild	74S86	
	National	DM74S86	
	Signetics	**74S86**	**1156**
SN75064	**IPS**	**IP2064**	**3599**
	Mitsubishi	M54532	
	Motorola	ULN2064	
	SGS	ULN2064	
	Sprague	ULN-2064	
	TI	ULN2064	
	Toshiba	TD62064	
SN75065	**IPS**	**IP2065**	**3599**
	Motorola	ULN2065	
	SGS	ULN2065	
	Sprague	ULN-2065	
	TI	ULN2065	
SN75066	**IPS**	**IP2066**	**3599**
	Motorola	ULN2066	
	SGS	ULN2066	
	Sprague	ULN-2066	
	TI	ULN2066	
SN75067	**IPS**	**IP2067**	**3599**
	Motorola	ULN2067	
	SGS	ULN2067	
	Sprague	ULN-2067	
	TI	ULN2067	
SN75068	**IPS**	**IP2068**	**3599**
	Motorola	**ULN2068**	**3212**
	SGS	ULN2068	
	Sprague	ULN-2068	
	TI	ULN2068	
SN75069	**IPS**	**IP2069**	**3599**
	Motorola	ULN2069	
	SGS	ULN2069	
	Sprague	ULN-2069	
	TI	ULN2069	
SN75070	**IPS**	**IP2070**	**3599**
SN75074	**IPS**	**IP2074**	**3599**
	Motorola	**ULN2074**	**3212**
	SGS	ULN2074	
	Sprague	ULN-2074	
	TI	ULN2074	
	Toshiba	TD62074	
SN75075	**IPS**	**IP2075**	**3599**
	Motorola	ULN2075	
	SGS	ULN2075	
	Sprague	ULN-2075	
	TI	ULN2075	
SN75076	**IPS**	**IP2076**	**3599**
SN75077	IPS	IP2007	
SN75107A	Hitachi	HD75107A	
SN75108A	Hitachi	HD75108A	
SN75109A	Motorola	MC75109	
SN75114	Fairchild	96114	
	TI	**SN55114**	**721**
SN75115	Fairchild	96115	
	TI	**SN55115**	**721**
SN75125	**Motorola**	**MC75125**	**3211**
	National	DS75125	
SN75127	**Motorola**	**MC75127**	**3211**
	National	DS75127	
SN75128	**Motorola**	**MC75128**	**3211**
	National	DS75128	
SN75129	**Motorola**	**MC75129**	**3211**
	National	DS75129	
SN75150	Fairchild	75150	
	National	DS75150	
SN75154	Fairchild	75154	
	National	DS75154	
◆SN75160	National	DS75160	
◆SN75161	National	DS75161	
◆SN75162	National	DS75162	
SN75180	National	DS8800	
SN75182	National	DS8820	
		DS8880	
	TI	DS8820	
		SN75480	
SN75183	National	DS8830	
	TI	DS8830	
SN75188	**Exar**	**XR1488**	**3560**
SN75189A	**Exar**	**XR1489A**	**3561**
	Fairchild	UA150	
		UA212A	
		μA1489A	
	Motorola	**MC1489A**	**3211,3212**
	National	DS1489A	
	SGS	MC1489	
	Signetics	**MC1489A**	**3720,3726**
			(Continued)
SN75189A	SiliconG	SG1489A	
	TI	MC1489A	
SN7520	Fairchild	7520	
	Motorola	MC7520	
SN75207B	National	DS75207	
SN75208B	National	DS75208	
SN7521	Fairchild	7521	
	Motorola	MC7521	
	National	LM7521	
SN7522	Motorola	MC7522	
SN75224	Fairchild	75S24	
	Motorola	MC7524	
	National	DS75S24	
	Signetics	7524	
	TI	SN7524	
SN7523	Motorola	MC7523	
	National	LM7523	
	Raytheon	RC7523	
SN75234	Fairchild	75S234	
SN75235	Motorola	MC75235	
SN75236	SiliconG	SG75236	
SN7524	Fairchild	75S24	
	Motorola	MC7524	
	National	DS75S24	
	Signetics	7524	
	TI	SN75224	
SN7528	Motorola	MC7528	
	Raytheon	RC7528	
	ThomsonCSF	SFC2528	
◆SN75322	National	DS75322	
SN75324	National	DS75324	
SN75325	Motorola	MC75325	
	National	DS75325	
	SiliconG	SG55327	
		SG75325	
	TI	**SN55327**	**722**
SN75326	SiliconG	SG75326	
SN75327	SiliconG	SG75327	
SN75362	National	DS75362	
SN75365	National	DS75365	
SN75368	Motorola	MC75358	
SN75430	Fairchild	75430	
SN75437A	**Sprague**	**UDN-2541**	**3269**
SN75440	National	DS3669	
SN75450B	Hitachi	HD75450A	
SN75451B	Hitachi	HD75451A	
SN75452B	Fairchild	75452	
	National	DS75452	
	SiliconG	SG75452	
SN75453B	Fairchild	75453	
	Motorola	MC75453	
	National	DS75453	
		LM75453	
	SiliconG	SG75453	
SN75454B	National	DS75454	
	SiliconG	SG75454	
SN75460	Motorola	MC75460	
	National	DS75460	
	SiliconG	SG75460	
SN75461	Fairchild	75461	
	Motorola	MC75401	
	National	DS75461	
	SiliconG	SG75461	
SN75462	Fairchild	75462	
	Motorola	MC75402	
	National	DS75462	
	SiliconG	SG75462	
SN75463	Motorola	MC75403	
	National	DS75463	
	SiliconG	SG75463	
SN75464	Motorola	MC75404	
	National	DS75464	
		SG75464	
	SiliconG	SG75464	
SN75465	Sprague	ULN-2025	
SN75466	RIFA	PBD352311	
	Signetics	NE5501	
	Sprague	ULN-2021	
SN75467	RIFA	PBD3524-14	
	SiliconG	SG2002	
		SG2022	
	Sprague	ULN-2022	
		ULS-2002	
SN75468	Exar	XR2003	
	Motorola	MC1413T	
	RIFA	PBD3523-13	
	SiliconG	SG2023	
	Sprague	ULN-2023	
		ULQ-2003	
SN75469	RIFA	PBD352312	
	SiliconG	SG2024	
	Sprague	ULN-2024	
SN75470	SiliconG	SG75470	
SN75471	National	DS3611	
		LM3611	
	Sprague	UDN-3611	
SN75472	National	DS3612	
		DS3632	
		LM3612	
	Sprague	UDN-3612	
SN75473	National	DS3613	
		LM3613	
	Sprague	UDN-3613	
SN75474	National	DS3614	
		LM3614	
	Sprague	UDN-3614	
SN75475	**Motorola**	**MC1472**	**3212**
	Sprague	UDN-5712	
	TI	UDN5712	
SN75476	Motorola	MC1471	
	Sprague	UDN-5711	
	TI	UDN5711	
SN75477	Sprague	UDN-5722	
SN75478	Motorola	MC1473	
	Sprague	UDN-5713	
	TI	UDN5713	
SN75479	Motorola	MC1474	
	Sprague	UDN-5714	
	TI	UDN5714	
	Toshiba	TD62479	
SN75480	National	DS8820	
		DS8880	
	TI	DS8820	
		SN75182	
◆SN75493	National	DS75493	
SN75494	National	DS75494	
SN75518	**GouldAMI**	**S4535**	**3169**
	Sprague	UCN-5818	
SN75551	**Siliconix**	**SI9551**	**3260**
	Sprague	**UCN-5851**	**3269**
SN75552	**Siliconix**	**SI9552**	**3260**
	Sprague	**UCN-5852**	**3269**
SN75553	**Siliconix**	**SI9553**	**3260**
	Sprague	**UCN-5853**	**3269**
SN75554	**Siliconix**	**SI9554**	**3260**
	Sprague	**UCN-5854**	**3269**
SN75605	Sprague	UDN-2950	
◆SN75S107	Signetics	75S107	
◆SN75S108	Signetics	75S108	
SN76001	MCE	MCE-820	
	SGS	TBA820	
	ThomsonCSF	TBA820	
SN76111	Fairchild	μA705	
	Motorola	**MC1309**	**3614**
		MC1311	
	National	LM1800	
	RCA	CA3145	
		CA3195	
	Sanyo	LA705	
		LA758	
	Signetics	**μA758**	**3727**
	Sprague	ULN-3809	
		ULN-3812	
	TI	SN76116	
SN76115	Exar	XR1310	
	National	LM1310	
	Toshiba	TA7157	
SN76116	Fairchild	μA705	
	Motorola	**MC1309**	**3614**
		MC1311	
	National	LM1800	
	RCA	CA3145	
		CA3195	
	Sanyo	LA705	
		LA758	
	Signetics	**μA758**	**3727**
	Sprague	ULN-3809	
		ULN-3812	
	TI	SN76111	
SN76131	Exar	XR4739	
	Fairchild	μA739	
		μA749	
	National	LM1303	
	Raytheon	RC4739	
	SGS	TBA231	
	TI	SN76149	
SN76149	Exar	XR4739	
	Fairchild	μA739	
		μA749	
	National	LM1303	
	Raytheon	RC4739	
	SGS	TBA231	
	TI	SN76131	
SN76177	National	LM377	

◆ Discontinued

Bold face device numbers indicate manufacturers data is provided in the IC Master on the pages noted.

ALTERNATE SOURCE DIRECTORY

Texas Instruments (Cont'd)

Manufacturer Device	Replacement Source	Device	IC Master Page
SN76227	Motorola	MC1327	
		TDA1327	
SN76242	RCA	CA3070	
SN76243	RCA	CA3071	
SN76266	National	LM3066	
SN76489	GI	AY3-8913	
	NCR	NCR8489	
SN76489A	NCR	NCR8489	
SN76600	**Motorola**	**MC1350**	**3612,3613**
	ThomsonCSF	ESM1350	
SN76635	National	LM1820	
SN76642	**Motorola**	**MC1357**	**3613**
	National	LM2111	
		LM2113	
	RCA	CA2111	
	Signetics	N5111	
	Sprague	ULN-2111	
	TI	SN76643	
SN76643	**Motorola**	**MC1357**	**3613**
	National	LM2111	
		LM2113	
	RCA	CA2111	
	Signetics	N5111	
	Sprague	ULN-2111	
	TI	SN76642	
SN76666	Motorola	LM3065	
		M5140	
	National	LM3064	
	RCA	CA3065	
	Sanyo	LA1365	
SN76675	National	LM3075	
	RCA	CA3075	
SNALS241A	Motorola	SN54ALS241	
	National	DM54ALS241	
SNN74HC597	Hitachi	HD74HC597	
	Universal	US74HC597	
TBP18S030	AMD	AM27LS19	
		AM27S19	
	Fujitsu	MB7112	
	MMI	5331-1	
		53S081	**4101**
		6331-1	
		63S081	**4101,4102**
	Motorola	MCM27S19	
	National	DM74S288	
		DM8578	
	Signetics	**N82S123**	**4166**
		S82S123	
TBP18S030M	National	DM54S288	
		DM7578	
TBP18SA30	AMD	AM27S18	
	Fujitsu	MB7111	
	Harris	HM7602	
	MMI	**6330**	**4102**
	National	DM74S188	
	Signetics	**N82S23**	**4166**
TBP24S10	AMD	27521	
		AM27S11	
		AM27S21	
	Fujitsu	MB7114	
	MMI	6301-1	
		63S141	**4101,4102**
	National	DM74S287	
	Signetics	**N82S129**	**4166**
TBP24S41	AMD	AM27S33	
	Fairchild	93453	
	Fujitsu	MB7122	
	Hitachi	HN25045	
	MMI	5353-1	
		535441	
		6353-1	
		63S441	**4101,4102**
		G35441	
	Motorola	**MCM7643**	**4124**
	National	DM74S573	
	NEC	UPB426	
	Signetics	N72HS137	
		N825137	
		N82S137	**4166**
		S82S195	
TBP24S41M	AMD	AM27S33M	
	MMI	**53S441**	**4101**
	Motorola	MCM7643M	
	National	DM54S573	
		DM54S573A	
	Signetics	S82HS137	
		S82S137	
		S82S195	
TBP24S81	AMD	27S185	
		AM27S185	
TBP24S81	Fujitsu	MB7128	
	Hitachi	HN25085	
	MMI	5389	
		6389	**4102**
		6389-1	
		63S841	**4101,4102**
	Motorola	**MCM7685**	**4124**
	National	77S185	
		87S185	
		DM87S185	
	Raytheon	29651	
		29651A	**4134**
	Signetics	82S185	
		N82HS185	
		N82S185	**4166**
	TI	24S81	
TBP24S81M	MMI	5389	
		5389-1	
	National	DM77S185	
	Raytheon	29651AM	
	Signetics	S82HS185	
		S82S185	
TBP24SA10	AMD	AM27S20	
	Fujitsu	MB7113	
	MMI	6300-1	
		63S140	**4101,4102**
	National	DM74S387	
	Signetics	**N82S126**	**4166**
TBP24SA10M	MMI	5300-1	
		53S140	**4101**
	National	DM54S387	
	Signetics	S82S126	
TBP24SA41M	AMD	AM27S32	
	Fairchild	93452	
	Fujitsu	MB7121	
	Hitachi	HN25044	
	MMI	5352-1	
		6352	**4102**
	National	DM54S572	
	Signetics	S82S136	
TBP24SA81	AMD	AM27S184	
	Fujitsu	MB7127	
	Hitachi	HM25045	
	MMI	6388	
		6388-1	
	National	DM87S184	
	Signetics	N82S184	
TBP28L22	Fujitsu	MB7118	
	MMI	6309-1	
TBP28L22M	MMI	5309-1	
TBP28L86	**Signetics**	**N82LS181**	**1175**
		S82LS181	
TBP28LA22	Fujitsu	MB7117	
	MMI	6308-1	
TBP28LA22M	MMI	5308-1	
TBP28S166	AMD	27S191	
		AM27S191	
	Fairchild	932511	
	Fujitsu	MB7138	
	Harris	76161	
		HM76161	
	Hitachi	HN25169	
	MMI	**63S1681**	**4101,4103**
	Motorola	MCM76101	
	National	77S191	
		87S191	
		DM87S191	
	Raytheon	**29681**	**4134**
	Signetics	82S191	
		N82S191	**4167**
	TI	28S166	
TBP28S2708A	Signetics	N82S2708	
		S82S2708	
TBP28S46	AMD	AM27S31	
	MMI	6341-1	
	Motorola	**MCM7641**	**4124**
	National	DM74S474	
	Signetics	N82S141	
TBP28S46M	MMI	5341-1	
	National	DM54S474	
	Signetics	S82S141	
TBP28S86AM	AMD	AM27S181M	
	Cypress	CY7C282M	
	Fairchild	932451	
		93451	
	Fujitsu	MB7132	
	Harris	7681	
	Hitachi	HN25089	
	MMI	5381-1	
		6381	**4102**
		6381-1	
TBP28S86AM	**Motorola**	**MCM7681**	**4124**
	National	DM77S181	
		DM77S281	
		DM87S281	
	Raytheon	29631AM	
		29632	
	Signetics	82S181	
		NS82HS195	
		S82HS181	
		S82S181	
	TI	28S86	
TBP28SA166	AMD	AM27S190	
	Fairchild	937510	
	Fujitsu	MB7137	
	Hitachi	HN25168	
	National	DM77S190	
		DM87S190	
	Signetics	S82S190	
TBP28SA42	AMD	AM27S28	
	Fujitsu	MB7123	
	MMI	6348-1	
	National	DM74S473	
	Signetics	N82S146	
TBP28SA46	AMD	AM27S30	
	MMI	6340-1	
	National	DM74S475	
		DM77S475	
		DM87S475	
	Signetics	N82S140	
TBP28SA86A	AMD	AM27S180	
	Fujitsu	MB7131	
	MMI	6380-1	
	National	DM87S180	
		DM87S229	
	Signetics	N82S180	
TBP28SA86AM	MMI	5380-1	
	National	DM77S180	
	Signetics	S82S180	
TCM2910A	**Harris**	**HC5510**	**3595**
	Intel	2910A	
TCM2912B	GTEMicro	G8912B	
	Harris	**HC5512**	**3596**
	Intel	2912	
		ID2912	
	National	TP3040	
	Plessey	MV8912	
	SGS	M5912	
TCM2913	Intel	2913	
	TI	TCM4913	
TCM2914	Intel	2914	
	TI	TCM4914	
TCM4910	Intel	2910	
TCM4913	Intel	2913	
	TI	TCM2913	
TCM4914	Intel	2914	
	TI	TCM2914	
TCM5087	Mostek	5087	
TCM5089	Mostek	5089	
TI32016	National	NS32016	
	TI	TMS32016	
TI32032	National	NS32032	
	TI	TMS32032	
TI32081	National	NS32081	
	TI	TMS32081	
TI32082	National	NS32082	
TI32201	National	NS32201	
TI32202	National	NS32202	
	TI	TMS32202	
TIBPAL16L8-20	Cypress	CYPAL16L8	
	MMI	PAL16L8	
		PAL16L8A	
	TI	**PAL16L8A**	**725**
TIBPAL16R4-20	AMD	AMPAL16R4	
	Cypress	CYPAL16R4	
	MMI	PAL16R4	
		PAL16R4A	
	National	PAL16R4	
	TI	**PAL16R4A**	**725**
		TIBPAL16R4-25	**725,4759**
		TIBPAL16R4-30	
TIBPAL16R4-25	AMD	AMPAL16R4	
	Cypress	CYPAL16R4	
	MMI	PAL16R4	
		PAL16R4A	
	National	PAL16R4	
	TI	**PAL16R4A**	**725**
		TIBPAL16R4-20	
		TIBPAL16R4-30	
TIBPAL16R4-30	AMD	AMPAL16R4	
	Cypress	CYPAL16R4	
	MMI	PAL16R4	
TIBPAL16R4-30	MMI	PAL16R4A	
	National	PAL16R4	
	TI	**PAL16R4A**	**725**
		TIBPAL16R4-20	
		TIBPAL16R4-25	**725,4759**
TIBPAL16R6-20	AMD	AMPAL16R6	
	Cypress	CYPAL16R6	
	MMI	PAL16R6	
		PAL16R6A	
	National	PAL16R6	
	TI	**PAL16R6A**	**725**
		TIBPAL16R6-25	**725,4759**
		TIBPAL16R6-30	
TIBPAL16R6-25	AMD	AMPAL16R6	
	Cypress	CYPAL16R6	
	MMI	PAL16R6	
		PAL16R6A	
	National	PAL16R6	
	TI	**PAL16R6A**	**725**
		TIBPAL16R6-20	
		TIBPAL16R6-30	
TIBPAL16R6-30	AMD	AMPAL16R6	
	Cypress	CYPAL16R6	
	MMI	PAL16R6	
		PAL16R6A	
	National	PAL16R6	
	TI	**PAL16R6A**	**725**
		TIBPAL16R6-20	
		TIBPAL16R6-25	**725,4759**
TIBPAL16R8-20	Cypress	CYPAL16R8	
	MMI	PAL16R8	
		PAL16R8A	
	TI	SN74PAL16R8A	
		TIBPAL16R8-25	**725,4759**
		TIBPAL16R8-30	
TIBPAL16R8-25	Cypress	CYPAL16R8	
	MMI	PAL16R8	
		PAL16R8A	
	TI	SN74PAL16R8A	
		TIBPAL16R8-20	
		TIBPAL16R8-30	
TIBPAL16R8-30	Cypress	CYPAL16R8	
	MMI	PAL16R8	
		PAL16R8A	
	TI	SN74PAL16R8A	
		TIBPAL16R8-20	
		TIBPAL16R8-25	**725,4759**
TIED461	Motorola	MFQD2404	
TIED463	Motorola	MFQD2405	
TIM8228	AMD	8228	
	Intel	8228	
	National	DP8228	
		INS8228	
	NEC	µPB8228	
	TI	SN74S428	
TL062	ThomsonCSF	TL062	
TL064	ThomsonCSF	TL064	
TL071	AnalogSys	MA333	
	Fairchild	UA771	
	Motorola	**MC34001**	**3616**
	NEC	UPC4081	
	TI	TL081C	
TL072	AnalogSys	MA336	
	Fairchild	UA772	
	Harris	HA5082	
	Motorola	**MC34002**	**3617**
	NEC	UPC4082	
	TI	TL082C	
TL074	AnalogSys	MA374	
	Fairchild	UA774	
	Motorola	**MC33074**	**3618**
		MC34004	**3618**
		MC34004A	
		MC34074	**3618**
	NEC	UPC4084	
	TI	TL084BC	
TL081	AMD	LF156A	
	AD	AD544	
	Burr-Brown	**OPA156A**	**3149,3150**
	Fairchild	LF156A	
	LinearTech	LF156A	
	National	LF156A	
	PMI	PM156A	
TL081AC	**Motorola**	**MC34001B**	**3616**
TL081C	AnalogSys	MA333	
	Fairchild	UA771	

(Continued)

◆ Discontinued

The manufacturers report their devices can be used as direct replacements.
Performance details often differ, so compare the specifications considering your requirements.

Texas Instruments (Cont'd)

Manufacturer Device	Replacement Source	Device	IC Master Page
TL081C	**Motorola**	**MC34001**	**3616**
	NEC	UPC4081	
	TI	TL071	
TL081M	**Motorola**	**MC35001B**	**3616**
TL082	**Exar**	**XR082**	**3555**
	RCA	**CA082**	**3672,3676**
	SGS	TL082	
	ThomsonCSF	TDB0353	
TL082AC	**Motorola**	**MC34002B**	**3617**
TL082BC	**Motorola**	**MC34002A**	**3617**
TL082C	AnalogSys	MA336	
	Fairchild	UA772	
	Harris	HA5082	
	Motorola	**MC34002**	**3617**
	NEC	UPC4082	
	TI	TL072	
TL082M	**Motorola**	**MC35002B**	**3617**
TL083	**Exar**	**XR083**	**3555**
TL084	Exar	XR084	
	Fairchild	μAF774	
	RCA	**CA084**	**3672,3676**
	SGS	TL084	
TL084AC	**Motorola**	**MC34004B**	**3618**
TL084BC	AnalogSys	MA374	
	Fairchild	UA774	
	Motorola	**MC33074**	**3618**
		MC34004	**3618**
		MC34004A	
		MC34074	**3618**
	NEC	UPC4084	
	TI	TL074	
TL084M	Harris	HA5084	
	Motorola	**MC35004**	**3618**
TL185	Harris	HI5045	
	Intersil	DG185	
		IH5045	
	Siliconix	DG185	
		DG5045	
TL431	Fairchild	μA431	
	Motorola	TL431	
◆TL484	Motorola	TL484	
◆TL485	Motorola	TL485	
TL494C	IPS	IP494C	
	TI	TL594C	
	Unitrode	**UC494AC**	**3739,3739**
TL494I	**Fujitsu**	**MB3759**	**1611**
	Sprague	ULQ-8194	
	TI	TL594I	
TL494M	Cherry	CS494M	
	Exar	**XR494**	**3557**
	Fairchild	μA494	
	IPS	**IP494A**	**3599**
	Motorola	TL494	
	Sprague	ULN8194A	
		ULS-8194	
	TI	**TL594M**	**720**
	Unitrode	**UC494A**	**3739,3739**
TL495C	**Unitrode**	**UC495AC**	**3739,3739**
TL495I	**Fujitsu**	**MB3760**	**1611**
	Sprague	ULQ-8195	
	TI	TL595I	
TL514	Motorola	MC1514	
	National	LM1514	
TL520*	**Siliconix**	**SI520**	**3248**
TL593	Cherry	CS593	
TL594C	IPS	IP494C	
	TI	TL494C	
	Unitrode	**UC494AC**	**3739,3739**
TL594I	**Fujitsu**	**MB3759**	**1611**
	Sprague	ULQ-8194	
	TI	TL494I	
TL594M	Cherry	CS494M	
	Exar	**XR494**	**3557**
	Fairchild	μA494	
	IPS	**IP494A**	**3599**
	Motorola	TL494	
	Sprague	ULN8194A	
		ULS-8194	
	TI	**TL494M**	**720**
	Unitrode	**UC494A**	**3739,3739**
TL595I	**Fujitsu**	**MB3760**	**1611**
	Sprague	ULQ-8195	
	TI	TL495I	
TL780-05C	IPS	IP780SAC	
	Motorola	TL780-05C	
TL780-12C	**IPS**	**IP7812AC**	**3599**
	Motorola	**TL780-12C**	**3622,3623,3624**
TL780-15C	**IPS**	**IP7815AC**	**3599**
	Motorola	TL	
TLC251	Harris	HA-2720	
	Intersil	ICL7611	
		ICL8021	
		LM4250	
	Maxim	ICL7611	
	Motorola	**MC1776**	**3616**
	National	LF441	
		LM4250	
	PMI	OP20	
		OP21	
		OP22	
	SGS	MC1776	
	Solitron	UC4250	
	TI	TLC271	
	ThomsonCSF	μA776	
TLC252	Intersil	ICL7621	
	Maxim	ICL7621	
	PMI	OP220	
		OP221	
	TI	TLC272	
TLC254	Intersil	ICL7641	
	Maxim	ICL7641	
	TI	TLC274	
TLC271	Harris	HA-2720	
	Intersil	ICL7611	
		ICL8021	
		LM4250	
	Maxim	ICL7611	
	Motorola	**MC1776**	**3616**
	National	LF441	
		LM4250	
	PMI	OP20	
		OP21	
		OP22	
	SGS	MC1776	
	Solitron	UC4250	
	TI	TLC251	
	ThomsonCSF	μA776	
TLC272	Intersil	ICL7621	
	Maxim	ICL7621	
	PMI	OP220	
		OP221	
	TI	TLC252	
TLC274	Intersil	ICL7641	
	Maxim	ICL7641	
	TI	TLC254	
TLC530	**Motorola**	**MC14444**	**3629**
	National	ADC0830	
	TI	TLC531	
TLC531	**Motorola**	**MC14444**	**3629**
	National	ADC0830	
	TI	TLC530	
TLC532	**Motorola**	**MC14442**	**3629**
	National	ADC0829	
	TI	TLC533	
TLC533	**Motorola**	**MC14442**	**3629**
	National	ADC0829	
	TI	TLC532	
TLC540	**Motorola**	**MC145040**	**3629**
	National	ADC0811	
	TI	TLC541	
TLC541	**Motorola**	**MC145040**	**3629**
	National	ADC0811	
	TI	TLC540	
TLC555	**Intersil**	**ICM7555**	**1090**
	Maxim	ICM7555	
TLS9SM	Sprague	ULS-8195	
	Unitrode	**UC495A**	**3739,3739**
TM2332	AMD	AM9232	
	CSG	MPS2332	
	Fairchild	F3532	
	GI	R03-9332	
	GouldAMI	S2333	
		S68A332	
	GTEMicro	G2332	
	Hitachi	HN46332	
	Intech	IM7332	
	Intel	2332	
	Mitsubishi	M58333	
	Motorola	**MCM68A332**	**4120**
	National	NM52132	
	NCR	NCR2332	
	NEC	UPD2332A	
	Panasonic	MN2332	
	RCA	**CDM5333**	**1673,1677**
	Rockwell	R2332	
(Continued)			
TM2332	SGS	M2332	
	Sharp	LH2332	
	Siemens	SA88332	
		SAB8332	
	Signetics	2332	
		2632A	
	SiliconG	SG3532	
	SSS	SCM23C32	
	SMC	ROM4732	
	Supertex	23SC32	
		CM3200	
	Synertek	SY2332	
	TI	TMS2332	
		TMS4732	
	Toshiba	TMM2332	
		TMM333P	
	VTI	VT2332	
TM4164	Fujitsu	MB85101A	
TMC2911A	**Harris**	**HC5511**	**3595**
	Intel	2911	
TMS1000	**Samsung**	**KS51000**	**4746**
TMS1200	Samsung	KS51200	
TMS2147	Cypress	CY2147	
		CY7C147	
	Hitachi	HM6147	
	Intel	2141	
		2147	
		2147-3	
	Motorola	MCM6147	
		MCM61L47	
	National	MM2147	
		NMC2141	
	NEC	MPD2147	
	OKI	MSM5104	
	Toshiba	TMM3150	
	UMC	UM2147	
TMS2168	AMD	AM2168	
		AM99C68	
	Cypress	CY7C168	
	Fujitsu	MB8168	
	Hitachi	HM6168	
	Inmos	IMS1420	
		IMS1421	
		IMS1423	
	IDT	IDT6168	
	Mitsubishi	M5M2168	
	Motorola	MCM6168	
TMS2332	AMD	AM9232	
	CSG	MPS2332	
	Fairchild	F3532	
	GI	R03-9332	
	GouldAMI	S2333	
		S68A332	
	GTEMicro	G2332	
	Hitachi	HN46332	
	Intech	IM7332	
	Intel	2332	
	Mitsubishi	M58333	
	Motorola	**MCM68A332**	**4120**
	National	NM52132	
	NCR	NCR2332	
	NEC	UPD2332A	
	Panasonic	MN2332	
	RCA	**CDM5333**	**1673,1677**
	Rockwell	R2332	
	SGS	M2332	
	Sharp	LH2332	
	Siemens	SA88332	
		SAB8332	
	Signetics	2332	
		2632A	
	SiliconG	SG3532	
	SSS	SCM23C32	
	SMC	ROM4732	
	Supertex	23SC32	
		CM3200	
	Synertek	SY2332	
	TI	TM2332	
		TMS4732	
	Toshiba	TMM2332	
		TMM333P	
	VTI	VT2332	
TMS2364	AMD	AM9265	
	Fairchild	F3568	
		F3569	
		F3570	
	GI	R03-9365	
		R09864	
	GouldAMI	S2364	
		S6364	
	GTEMicro	G5364	
(Continued)			
TMS2364	Hitachi	HN61364	
	Intel	2364A	
	Mitsubishi	M5M2364	
		M5M2365	
		M5M23C64	
	Mostek	MK37000	
	Motorola	MCM68369	
		MCM68370	
	National	MM52264	
		NM52264	
	OKI	**MSM3864**	**4733**
	Panasonic	MN2364	
		MN4864	
	RCA	**CDM5365**	**1673,1677**
	Rockwell	R2364B	
	SSS	SCM23C65	
	Supertex	23SC64	
		23SC64/A	
		CM6400	
	Synertek	SY2365/A	
	TI	TMS4764	
	Toshiba	TMM2365	
	UMC	UM2366	
	VTI	VT2365	
TMS2501	Western	WD2501	
TMS2511	Western	WD2511	
TMS2791	Western	WD2791	
TMS2793	Western	WD2793	
TMS2795	Western	WD2795	
TMS2797	Western	WD2797	
TMS27C128	AMD	AM27128	
	Fujitsu	MBM27128	
	Hitachi	HM4827128	
	Intel	27128	
		27128A	**4074**
	Mitsubishi	M5L27128	
		M5L27C128	
	NEC	μPD27128	
	SEEQ	27128	
	SGS	M27128	
	Toshiba	TMM27128	
TMS27C64	AMD	AM2764	
	Fujitsu	MBM2764	
		MBM27C64	
	Hitachi	HM482764	
		HN2764	
		HN27C64	
		HN482764	
	Intel	2764	
		2764A	
		27C64	**4078**
		87C64	**4078**
	Mitsubishi	M5L2764	
	NEC	UPD2764	
		UPD27C64	
	OKI	MSM2764	
		MSM2764A	**4732**
		MSM27C64	
	Rockwell	R2764	
		R27C64	
		R87C64	
	S-MOS	SPM27C64	
	SEEQ	2764	
		5133	
	SGS	M2764	
	Signetics	27C64	
	SSS	SCM27C64	
	ThomsonCSF	ET2764	
	Toshiba	**TMM2764**	**4263**
TMS27P32A	Intel	P2732A	
TMS27PG4	Intel	P2764A	
TMS32010	GI	32010	
TMS32016	National	NS32016	
	TI	TI32016	
TMS32032	National	NS32032	
	TI	TI32032	
TMS32081	National	NS32081	
	TI	TI32081	
TMS32082	National	MS32082	
TMS32201	National	MS32201	
TMS32202	National	NS32202	
	TI	TI32202	
TMS4016	AMD	AM9128	
		AM9218	
	Cypress	CY7C128	
	Fujitsu	MB8128	
		MB8416	
	Harris	HM6116	
		HM6516	
	IDT	IDT6116	
	Intel	2128	
(Continued)			

◆ Discontinued

Bold face device numbers indicate manufacturers data is provided in the IC Master on the pages noted.

Texas Instruments (Cont'd)

Manufacturer Device	Replacement Source	Device	IC Master Page
TMS4016	MicroPwr	MP6116	
	Mitsubishi	M58275	
		M5M116	
		M5M5116	
		M5M5117	
		M5M5118	
		MS8725	
	Motorola	MCM2016	
		MCM2016H	
		MCM2128	
		MCM6116	**4119**
		MCM61L16	**4119**
		MCM65116	
	National	MMC2116	
	NEC	μPD4016	
	OKI	MSM2128	
		MSM5128	**4732.4733**
	RCA	MWS6116A	
	SSS	883C21C16	
		BCM21C16	
		SCM21C16	
		SCM6116	
	ThomsonCSF	ET2128	
	Toshiba	**TC5516A**	**4263**
		TMM2015A	
		TMM2016	
		TMM2016A	**4263**
	Samsung	KM6816	
	UMC	UM2128	
	Universal	US574HC133	
TMS4257	AMD	MCM6256	
	AT&T	WCM41256	
	Fujitsu	MB81256	
	Hitachi	HM50256	
		HM50257	
	MicronTech	MT1256	
	Mitsubishi	M5M4256	
		MSM4257	
	Motorola	MCM6256	
		MCM6257	
	NEC	MPD41257	
		μPD41256	
	OKI	M5M37256	
		MSM37256	
		MSM41256	
	Panasonic	MM41256	
	Toshiba	TMM41256	
	Samsung	KM1256	
TMS4416	Fujitsu	MB81416	
	Hitachi	HM48416	
	Inmos	IMS2620	
	Mitsubishi	M5M4416	
TMS4461	Fujitsu	MB81461	
	Hitachi	HM53464	
	NEC	μPD41254	
TMS4464	NEC	UPD41254	
		UPD41464	
TMS4500A	**VTI**	**VL4500A**	**1751,1752,1754**
TMS4732	AMD	AM9232	
	CSG	MPS2332	
	Fairchild	F3532	
	GI	R03-9332	
	GouldAMI	S2333	
		S68A332	
	GTEMicro	G2332	
	Hitachi	HN46332	
	Intech	IM7332	
	Intel	2332	
	Mitsubishi	M58333	
	Motorola	**MCM68A332**	**4120**
	National	NM52132	
	NCR	NCR2332	
	NEC	UPD2332A	
	Panasonic	MN2332	
	RCA	**CDM5333**	**1673,1677**
	Rockwell	R2332	
	SGS	M2332	
	Sharp	LH2332	
	Siemens	SA88332	
		SAB8332	
	Signetics	2332	
		2632A	
	SiliconG	SG3532	
	SSS	SCM23C32	
	SMC	ROM4732	
	Supertex	23SC32	
		CM3200	
TMS4732	Synertek	SY2332	
	TI	TM2332	
		TMS2332	
	Toshiba	TMM2332	
		TMM333P	
	VTI	VT2332	
TMS4764	AMD	AM9265	
	Fairchild	F3568	
		F3569	
		F3570	
	GI	R03-9365	
		R09864	
	GouldAMI	S2364	
		S6364	
	GTEMicro	G5364	
	Hitachi	HN61364	
	Intel	2364A	
	Mitsubishi	M5M2364	
		M5M2365	
		M5M23C64	
	Mostek	MK37000	
	Motorola	MCM68369	
		MCM68370	
	National	MM52264	
		NM52264	
	OKI	**MSM3864**	**4733**
	Panasonic	MN2364	
		MN4864	
	RCA	**CDM5365**	**1673,1677**
	Rockwell	R2364B	
	SSS	SCM23C65	
	Supertex	23SC64	
		23SC64/A	
		CM6400	
	Synertek	SY2365/A	
	TI	TMS2364	
	Toshiba	TMM2365	
	UMC	UM2366	
	VTI	VT2365	
TMS7000	GI	PIC7000	
TMS7020	GI	PIC7020	
TMS7040	GI	PIC7040	
TMS7041	GI	PIC7041	
TMS70C00	GI	PIC70C00	
TMS70C20	GI	PIC70C20	
TMS72720	SEEQ	72720	
TMS9650	National	9650	
	Western	WD9650	
TMS9900	GouldAMI	S9900	
TMS9901	GouldAMI	S9901	
TMS9902	GouldAMI	S9902	
TMS9914A	Western	WD9914A	
TMS9927	SMC	CRT5027	
TMS9937	SMC	CRT5037	
TMS9980	GouldAMI	S9980	
UCN4810A	**GouldAMI**	**S4534**	**3168**
	Sprague	UCN-5810	
UDN2841	Motorola	UDN2841	
	Sprague	UDN-2841	
UDN2845	Motorola	UDN2845	
	Sprague	UDN-2845	
UDN5711	Motorola	MC1471	
	Sprague	UDN-5711	
	TI	SN75476	
UDN5712	**Motorola**	**MC1472**	**3212**
	Sprague	UDN-5712	
	TI	SN75475	
UDN5713	Motorola	MC1473	
	Sprague	UDN-5713	
	TI	SN75478	
UDN5714	Motorola	MC1474	
	Sprague	UDN-5714	
	TI	SN75479	
	Toshiba	TD62479	
ULN2001A	Exar	XR2001	
		XR2001C	
		XR2201C	
	Mitsubishi	M54524	
	Motorola	**MC1411**	**3212**
		ULN2001	**3212**
	NEC	μPA2001	
	RIFA	PBD3523-11	
	Sanyo	LB1231	
	SGS	L201	
		ULN2001	
	SiliconG	SG2001	
	Sprague	**ULN-2001**	**3269**
		ULQ-2001	
	Toshiba	TD62001	
		TD62101	
ULN2002A	Exar	XR2002C	
		XR2202C	
	Fairchild	MC1412	
	Mitsubishi	M54525	
	Motorola	**MC1412**	**3212**
		ULN2002	**3212**
	NEC	μPA2002	
	RIFA	PBD352304	
	Sanyo	LB1232	
	SGS	L202	
		ULN2002	
	Signetics	NE5602	
	SiliconG	SG2002	
	Sprague	ULN-2002	
	Toshiba	TD62002	
ULN2003A	Exar	XR2003C	
		XR2203C	
	Fairchild	MC1413	
	Mitsubishi	M54523	
	Motorola	**MC1413**	**3212**
		ULN2003	**3212**
	NEC	μPA2003	
	RIFA	PBD352303	
	Sanyo	LB1233	
	SGS	L203	
		ULN2003	
	Signetics	NE5603	
		ULN2003	**3721**
	SiliconG	SG2003	
	Sprague	ULN-2003	
	Telefunken	TDA2003	
	Toshiba	TD62003	
		TD62103	
ULN2004A	Exar	XR2204C	
	Mitsubishi	M54526	
	Motorola	**MC1416**	**3212**
		ULN2004	**3212**
	NEC	μPA2004	
	RIFA	PBD352302	
	Sanyo	LB1234	
	SGS	L204	
		ULN2004	
	Signetics	NE5604	
		ULN2004	**3721**
	SiliconG	SG2004	
	Sprague	ULN-2004	
		ULS-2004	
	Toshiba	TD62004	
		TD62104	
ULN2005	Exar	XR2205C	
	Sprague	ULN-2005	
ULN2064	**IPS**	**IP2064**	**3599**
	Mitsubishi	M54532	
	Motorola	ULN2064	
	SGS	ULN2064	
	Sprague	ULN-2064	
	TI	SN75064	
	Toshiba	TD62064	
ULN2065	**IPS**	**IP2065**	**3599**
	Motorola	ULN2065	
	SGS	ULN2065	
	Sprague	ULN-2065	
	TI	SN75065	
ULN2066	**IPS**	**IP2066**	**3599**
	Motorola	ULN2066	
	SGS	ULN2066	
	Sprague	ULN-2066	
	TI	SN75066	
ULN2067	**IPS**	**IP2067**	**3599**
	Motorola	ULN2067	
	SGS	ULN2067	
	Sprague	ULN-2067	
	TI	SN75067	
ULN2068	**IPS**	**IP2068**	**3599**
	Motorola	**ULN2068**	**3212**
	SGS	ULN2068	
	Sprague	ULN-2068	
	TI	SN75068	
ULN2069	**IPS**	**IP2069**	**3599**
	Motorola	ULN2069	
	SGS	ULN2069	
	Sprague	ULN-2069	
	TI	SN75069	
ULN2074	**IPS**	**IP2074**	**3599**
	Motorola	**ULN2074**	**3212**
	SGS	ULN2074	
	Sprague	ULN-2074	
	TI	SN75074	
	Toshiba	TD62074	
ULN2075	**IPS**	**IP2075**	**3599**
	Motorola	ULN2075	
	SGS	ULN2075	
ULN2075	Sprague	ULN-2075	
	TI	SN75075	
XR4151	**Exar**	**XR4151**	**3561**
	Raytheon	**RC4151**	**3665**
		RM4151	
		RV4151	
μA2240	Exar	XR2240	
	Fairchild	UA238	
		μA2240	
	Intersil	ICL8240	
μA709	Fairchild	μA709	
	Hitachi	HA1303	
	Motorola	**MC1709**	**3615**
	National	LM1709	
		LM709	
	NEC	μPC255	
		μPC55	
	RCA	**CA3038**	**3672**
	ThomsonCSF	SFC2709	
	Toshiba	TA7502	
μA723	Fairchild	μA723	
	Hitachi	HA17723	
	Intersil	LM723	
	Motorola	**MC1723**	**3625**
	National	LM723	
	Raytheon	RC723	
		RM723	
	RCA	CA723	
		LM723	
	SGS	L123	
		LM723	
	Signetics	**μA723**	**3721,3730**
	SiliconG	SG723	
	ThomsonCSF	LM723	
μA733	Fairchild	μA733	
	Hitachi	HA17733	
	Intersil	μA733	
	Motorola	**MC1733**	**3616**
		NE592	
	National	LM733	
	Signetics	**μA733**	**3721,3729**
μA747	AMD	747	
	Fairchild	μA747	
	Hitachi	HA17747	
	MicroPwr	MPOP04	
	Motorola	**MC1747**	**3617**
	National	LM747	
	NEC	μPC251	
	PMI	**OP-04**	**3636**
		PM747	
	Raytheon	RC747	
		RM747	
	RCA	**CA747**	**3672**
	Signetics	**μA747**	**3721**
	TeledyneS	747	
μA748	National	LM748	
	SGS	LM748	
		LS148	
	SiliconG	SG201	
	TI	LM201	
		SN72748P	
	ThomsonCSF	LM201	
		LM748	
μA7806	Lambda	LMC7806	
		LμA7806	
	Motorola	**MC7806**	**3623**
	SiliconG	SG340-6	
		SG7806	
	ThomsonCSF	μA7806	
	Samsung	MC7806	
μA7808	Lambda	LMC7808	
		LμA7808	
	Motorola	**MC7808**	**3623**
	NEC	μPC7808	
	SiliconG	SG340-8	
		SG7808	
	ThomsonCSF	μA7808	
	Samsung	MC7808	
μA7812	Fairchild	μA7812	
	IPS	**IP140-12**	**3599**
		IP340-12	**3599**
		IP7812	**3599**
	Lambda	LMC7812	
		LμA7812	
	Motorola	**MC7812**	**3623**
	National	LM7812	
	NEC	μPC7812	
	SGS	L7812	
	SiliconG	SG340-12	
		SG7812	
	Toshiba	TA78012	

(Continued)

◆ Discontinued

The manufacturers report their devices can be used as direct replacements.
Performance details often differ, so compare the specifications considering your requirements.

Texas Instruments (Cont'd)

Manufacturer Device	Replacement Source	Device	IC Master Page
μA7812	Samsung	MC7812	
	Unitrode	UC7812	
μA7815	Fairchild	μA7815	
		μA78L15	
	IPS	**IP140-15**	**3599**
		IP340-15	**3599**
		IP7815	**3599**
	Lambda	LAS1515	
		LMC7815	
		LμA7815	
	Motorola	**MC7815**	**3624**
		MC78L15	
	National	LM340-15	
		LM340LA-15	
		LM340T-15	
		LM7815	
		LM78L15	
	NEC	μPC7815	
		μPC78L15	
	SGS	L7815	
	SiliconG	SG340-15	
		SG7815	
	TI	LM340-15	
		μA78L15	
	ThomsonCSF	μA7815	
	Toshiba	TA78015	
	Samsung	MC7815	
	Unitrode	UC7815	
μA7818	Lambda	LMC7818	
	NEC	μPC7818	
	SiliconG	SG340-18	
		SG7818	
	TI	LM340-18	
	ThomsonCSF	μA7818	
μA7824	Lambda	LMC7824	
		LμA7824	
	Motorola	**MC7824**	**3624**
	NEC	μPC7824	
	SGS	L7824	
	SiliconG	SG7824	
	TI	LM340-24	
	ThomsonCSF	μA7824	
	Samsung	MC7824	
μA78L02	Fairchild	μA78L02	
	Motorola	MC7802	
μA78L02A	Fairchild	μA78L02A	
μA78L05	Fairchild	μA78L05	
	Motorola	MC78L05	
	National	LM340LA-5	
		LM78L05	
	NEC	μPC78L05	
	ThomsonCSF	μA7805	
μA78L05A	Fairchild	μA78L05A	
μA78L06	Fairchild	μA78L06	
	Motorola	MC78L06	
	TI	μA87L06	
μA78L06A	Fairchild	μA78L06A	
μA78L08	Motorola	MC78L08	
	NEC	μPC78L08	
μA78L08A	Fairchild	μA78L08A	
μA78L09A	Fairchild	μA78L09A	
μA78L10A	Fairchild	μA78L10A	
μA78L12	Fairchild	μA78L12	
	Motorola	MC78L12	
	National	LM340LA-12	
		LM78L12	
	NEC	μPC78L12	
	ThomsonCSF	SFC2812	
		μA7812	
μA78L12A	Fairchild	μA78L12A	
μA78L15	Fairchild	μA7815	
		μA78L15	
	IPS	**IP140-15**	**3599**
		IP340-15	**3599**
		IP7815	**3599**
	Lambda	LAS1515	
		LMC7815	
		LμA7815	
	Motorola	**MC7815**	**3624**
		MC78L15	
	National	LM340-15	
		LM340LA-15	
		LM340T-15	
		LM7815	
		LM78L15	
	NEC	μPC7815	
		μPC78L15	
	SGS	L7815	
	SiliconG	SG340-15	
		SG7815	

(Continued)

Manufacturer Device	Replacement Source	Device	IC Master Page
μA78L15	TI	LM340-15	
		μA7815	
	ThomsonCSF	μA7815	
	Toshiba	TA78015	
	Samsung	MC7815	
	Unitrode	UC7815	
μA78L15A	Fairchild	μA78L15A	
μA78M05	Fairchild	μA78M05	
	Motorola	MC78M05	
	National	LM341-5	
		LM342-05	
		LM78M05	
	NEC	μPC78M05	
	Sanyo	L78M05	
	SGS	L78M05CV	
	Samsung	MC78M05	
μA78M06	Fairchild	μA78M06	
	Motorola	MC78M06	
	Sanyo	L78M06	
	SGS	L78M06CV	
	Samsung	MC78M06	
μA78M08	Fairchild	μA78M08	
	Motorola	MC78M08	
	NEC	μPC78M08	
	Sanyo	L78M08	
	SGS	L78M08CV	
	Samsung	MC78M08	
μA78M10	Fairchild	μA78M10	
◆μA78M12	Fairchild	μA78M12	
	Motorola	MC78M12	
	National	LM341-12	
		LM342-12	
		LM78M12	
	NEC	μPC78M12	
	Sanyo	L78M12	
	SGS	L78M12CV	
	Samsung	MC78M12	
◆μA78M15	Fairchild	μA78M15	
	Motorola	MC78M15	
	National	LM341-15	
		LM342-15	
		LM78M15	
	NEC	μPC78M15	
	Sanyo	L78M15	
	SGS	L78M15CV	
	Samsung	MC78M15	
μA78M20	Motorola	MC78M20	
μA78M24	Fairchild	μA78M24	
	Motorola	MC78M24	
	Sanyo	L78M24	
	SGS	L78M24CV	
	Samsung	MC78M24	
μA7905	Fairchild	μA7905	
		μA79M05	
	IPS	**IP120-5**	**3599**
		IP320-5	**3599**
		IP7905	**3599**
	Lambda	LμA7905	
	National	LM320MP5	
		LM7905	
		LM79M05	
	NEC	μPC7905	
	SiliconG	SG120-5	
		SG320-05	
		SG320P-5	
	Unitrode	UC7905	
μA7906	Motorola	MC7906	
	Samsung	MC7906	
μA7908	Fairchild	MC7908	
		μA7908	
		μA79M08	
	Lambda	LMC7908	
		LμA7908	
	Motorola	MC7908	
	SGS	L7908	
	SiliconG	SG7908	
	TI	μA79M08	
	Samsung	MC7908	
μA7912	Fairchild	μA7912	
		μA79M12	
	IPS	**IP320-12**	**3599**
		IP7912	**3599**
	Motorola	MC7912	
	National	LM320MP12	
		LM7912	
		LM79M12	
	NEC	μPC7912	
	SGS	L7912	
	SiliconG	SG320P-12	
		SG7912	
	TI	LM320-12	
	ThomsonCSF	μA7912	

(Continued)

Manufacturer Device	Replacement Source	Device	IC Master Page
μA7912	Samsung	MC7912	
	Unitrode	UC7912	
μA7915	Fairchild	μA7915	
	IPS	**IP320-15**	**3599**
		IP7915	**3599**
	Motorola	MC7915	
	National	LM320-15	
		LM320T15	
		LM7915	
	NEC	μPC7915	
	SGS	L7915	
	SiliconG	SG320-15	
		SG7915	
	TI	LM320-5	
	ThomsonCSF	μA7915	
	Samsung	MC7915	
	Unitrode	UC7915	
μA7918	Motorola	MC7918	
	SGS	L7918	
	SiliconG	SG7918	
	Samsung	MC7918	
μA7924	Motorola	MC7924	
	Samsung	MC7924	
◆μA79M05	Fairchild	μA7905	
		μA79M05	
	IPS	**IP120-5**	**3599**
		IP320-5	**3599**
		IP7905	**3599**
	Lambda	LμA7905	
	National	LM320MP5	
		LM7905	
		LM79M05	
	NEC	μPC7905	
	SiliconG	SG120-5	
		SG320-05	
		SG320P-5	
	TI	μA7905	
	Unitrode	UC7905	
μA79M06	Fairchild	μA79M06	
μA79M08	Fairchild	MC7908	
		μA7908	
		μA79M08	
	Lambda	LMC7908	
		LμA7908	
	Motorola	MC7908	
	SGS	L7908	
	SiliconG	SG7908	
	TI	μA7908	
	Samsung	MC7908	
◆μA79M12	Fairchild	μA7912	
		μA79M12	
	IPS	**IP320-12**	**3599**
		IP7912	**3599**
	Motorola	MC7912	
	National	LM320MP12	
		LM7912	
		LM79M12	
	NEC	μPC7912	
	SGS	L7912	
	SiliconG	SG320P-12	
		SG7912	
	TI	LM320-12	
		μA7912	
	ThomsonCSF	μA7912	
	Samsung	MC7912	
	Unitrode	UC7912	
μA87L06	Fairchild	μA78L06	
	Motorola	MC78L06	
	TI	μA78L06	
μA9636A	Fairchild	μA9636A	
μA9637A	Fairchild	μA9637A	
μA9638	Fairchild	UA9679	
		μA9638	
μAA170	Siemens	μAA170	
μAA171	Siemens	μAA171	

Thomson-CSF Components Corporation

Manufacturer Device	Replacement Source	Device	IC Master Page
EF6800	Fairchild	F6800A	
	Hitachi	HD6800	
		HD68A00	
		HD68B00	
	Motorola	**MC6800**	**1660**
EF68000	Hitachi	HD68000	
	Mostek	**MK68000**	**1647**
	Motorola	MC68000	
	Rockwell	R68000	
	Signetics	**SCN68000**	**1720**
EF68008	**Mostek**	**MK68008**	**1648**
EF6801	GouldAMI	S6801	
	Hitachi	HD6801	

Manufacturer Device	Replacement Source	Device	IC Master Page
EF6802	Fairchild	F6802	
	GouldAMI	S6802	
	Hitachi	HD6802	
	Motorola	**MC6802**	**1660**
EF6803	Hitachi	HD6803	
EF6804	**Motorola**	**MC6804**	**1664,1669**
EF6805	GouldAMI	S6805	
	Hitachi	HD6805	
	Motorola	**MC6805**	**1664,1667,1905**
EF6808	Fairchild	F6808	
	GouldAMI	S6808	
	Motorola	**MC6808**	**1660**
EF6809	GouldAMI	S6809	
	Hitachi	HD6809	
		HD68A09	
		HD68B09	
	Motorola	**MC6809**	**1660,1905**
EF6810	Fairchild	F6810	
	GouldAMI	S6810	
	Hitachi	HD6810	
		HD68A10	
	Motorola	MC6810	
		MCM6810	**1662,4119**
EF6821	Fairchild	F6821	
	GouldAMI	S6821	
	Hitachi	HD6821	
		HD68A21	
		HD68B21	
EF68230	Mostek	MK68230	
	Signetics	SCN68230	
EF68440	Mostek	MK68440	
EF6846	Fairchild	F6846	
	GouldAMI	S6846	
	Hitachi	HD6846	
EF6850	Fairchild	F6850	
	GouldAMI	S1602	
	Hitachi	HD6850	
	Motorola	**MC6850**	**1663**
EF6854	Fairchild	F6854	
	GouldAMI	S6854	
ESM1350	**Motorola**	**MC1350**	**3612,3613**
	TI	SN76600	
ET2128	AMD	AM9128	
		AM9218	
	Cypress	CY7C128	
	Fujitsu	MB8128	
		MB8416	
	Harris	HM6116	
		HM6516	
	IDT	IDT6116	
	Intel	2128	
	MicroPwr	MP6116	
	Mitsubishi	M58275	
		M5M116	
		M5M5116	
		M5M5117	
		M5M5118	
		MS8725	
	Motorola	MCM2016	
		MCM2016H	
		MCM2128	
		MCM6116	**4119**
		MCM61L16	**4119**
		MCM65116	
	National	MMC2116	
	NEC	μPD4016	
	OKI	MSM2128	
		MSM5128	**4732,4733**
	RCA	MWS6116A	
	SSS	883C21C16	
		BCM21C16	
		SCM21C16	
		SCM6116	
	TI	TMS4016	
	Toshiba	**TC5516A**	**4263**
		TMM2015A	
		TMM2016	
		TMM2016A	**4263**
	Samsung	KM6816	
	UMC	UM2128	
	Universal	US574HC133	
ET2148	AMD	AM2148	
		AM2149	
	Cypress	CY2148	
		CY2149	
		CY7C148	
		CY7C149	
	Intel	2148H	
		2149H	

(Continued)

◆ Discontinued

Bold face device numbers indicate manufacturers data is provided in the IC Master on the pages noted.

Thomson-CSF Components Corporation (Cont'd)

Manufacturer Device	Replacement Source	Device	IC Master Page
ET2148	National	NMC2148	
	NEC	UPD2149	
	UMC	UM2148	
		UM2149	
ET2716	Hitachi	HN462716	
	National	MM2716	
	OKI	MSM2716	
	SGS	M2716	
ET2764	AMD	AM2764	
	Fujitsu	MBM2764	
		MBM27C64	
	Hitachi	HM482764	
		HN2764	
		HN27C64	
		HN482764	
	Intel	2764	
		2764A	
		27C64	**4078**
		87C64	**4078**
	Mitsubishi	M5L2764	
	NEC	UPD2764	
		UPD27C64	
	OKI	MSM2764	
		MSM2764A	**4732**
		MSM27C64	
	Rockwell	R2764	
		R27C64	
		R87C64	
	S-MOS	SPM27C64	
	SEEQ	2764	
		5133	
	SGS	M2764	
	Signetics	27C64	
	SSS	SCM27C64	
	TI	TMS27C64	
	Toshiba	**TMM2764**	**4263**
ET4116	Hitachi	HM4716A	
	OKI	MSM3716	
	Toshiba	TMM416	
ET4164	Fairchild	F64K	
	Fujitsu	MB8264A	
		MB8266A	
	Hitachi	HM4864	
	Inmos	IMS2600	
	MicronTech	MT4264	
	Motorola	MCM4164B	
		MCM6665B	
	National	NMC4164	
	NEC	μPD4164	
	OKI	MSM3764	
	Toshiba	TMM4164	
	Samsung	KM4164	
ET9410	National	COP410	
ET9411	National	COP411	
ET9420	National	COP420	
ET9421	National	COP421	
ET9422	National	COP422	
ET9444	National	COP444	
ET9445	National	COP445	
L702B	SGS	L702B	
		L702N	
	ThomsonCSF	L702SP	
L702SP	SGS	L702B	
		L702N	
	ThomsonCSF	L702B	
LF155	AD	AD381	
		AD544	
	Burr-Brown	OPA606	
	LinearTech	LF155	
		LT1022	
		LT1055	
		LT1056	
		OP-15	
	National		
		LF155	
	PMI	OP-15	
LF156	Burr-Brown	OPA156A	
	LinearTech	LF156	
		OP-16	
	MicroPwr	MPOP16	
	National	LF156	
	PMI	OP-16	
LF157	MicroPwr	MPOP17	
	PMI	OP-17	
LF351	PMI	OP-16	
	RCA	**CA081**	**3672,3676**
	ThomsonCSF	TL081	
LF355	LinearTech	LF355	
	Motorola	**LF355**	**3616**
		(Continued)	
LF355	National	LF355	
	PMI	PM355	
LF356	LinearTech	LF356	
	Motorola	**LF356**	**3616**
	National	LF356	
	PMI	PM356	
LM101	AMD	LM101	
	AD	AD101	
	Fairchild	μA101	
	Intersil	AD101	
	LinearTech	LM101	
	Motorola	LM101	
	Raytheon	LM101	
	SiliconG	SG101	
LM104	National	LM104	
	SiliconG	SG104	
LM105	AMD	LM105	
	Fairchild	μA105	
	Intersil	LM105	
	National	LM105	
	SiliconG	SG105	
LM107	AMD	LM107	
	AD	**AD741S**	**3507**
	Burr-Brown	3500	
	LinearTech	LM107	
	National	LH741A	
		LM107	
	PMI	PM741	
	Raytheon	RC741	
	SiliconG	SG107	
	TI	**LM107**	**718**
LM111	AD	AD111	
	Fairchild	μA111	
	LinearTech	LM111	
	Motorola	**LM111**	**3631**
	National	LM111	
	Raytheon	LM111	
	Signetics	**LM111**	**3725**
	SiliconG	SG111	
	TI	**LM111**	**719**
LM117	Fairchild	μA117	
	IPS	**IP117**	**3599**
	LinearTech	LM117	
	MCE	MCE-LM117	
	Motorola	**LM117**	**3625**
	SiliconG	SG117	
	TI	LM117	
	ThomsonCSF	TDC0117	
	Unitrode	UC117	
LM137	**IPS**	**IP137**	**3599**
	LinearTech	LM137	
	MCE	MCE-LM137	
	Motorola	**LM137**	**3625**
	National	LM137	
	ThomsonCSF	TDC0137	
	Unitrode	UC137	
LM201	National	LM748	
	SGS	LM748	
		LS148	
	SiliconG	SG201	
	TI	LM201	
		SN72748P	
		μA748	
	ThomsonCSF	LM748	
LM204	National	LM204	
	SiliconG	SG204	
LM208	Harris	HA5135	
	TI	μA714	
LM211	AD	AD211	
	Motorola	**LM211**	**3631**
	National	LM211	
	RCA	LM211	
	Signetics	**LM211**	**3725**
	SiliconG	SG211	
	TI	LM211	
LM2901	Cypress	CY7C901	
	Fairchild	μA2901	
		μA3302	
	Motorola	**LM2901**	**3631**
		MC3302	**3631**
	National	LM2901	
		LM3302	
	NEC	μPC2901	
	PMI	CMP-04	
	Raytheon	LM2901	
		RC3302	
	RCA	CA3302	
	SGS	LM2901	
		MC3302	
	Signetics	**LM2901**	**3721,3722**
		MC3302	**3721**
	SiliconG	SG324A	
		(Continued)	
LM2901	TI	LM2901	
		LM3302	
LM2902	Fairchild	μA2902	
	Hitachi	HA17902	
	Motorola	**LM2902**	**3618**
	National	LM2902	
	NEC	μPC2902	
	Raytheon	LM2902	
	SGS	LM2902	
	TI	LM2902	
LM2903	AD	AD311	
	Fairchild	μA311	
	LinearTech	LM311	
	Motorola	**LM2903**	**3631**
		LM311	**3631**
	National	LM2903	
		LM311	
	NEC	μPC271	
		μPC311	
	Raytheon	LM311	
	RCA	**CA311**	**3672,3677**
		LM311	
	SGS	LM2903	
		LM311	
	Signetics	**LM2903**	**3725**
		LM311	**3721**
	SiliconG	SG311	
	TI	LM2903	
		LM311	
	ThomsonCSF	LM311	
		SFC3111	
LM2904	**Motorola**	**LM2904**	**3617**
	RCA	CA2904	
	TI	LM2904	
LM301A	AD	AD301	
	Fairchild	μA301A	
	Intersil	AD301	
	LinearTech	LM301	
		LM301A	
	Motorola	LM301	
	National	LM301	
		LM301A	
	NEC	μPC157	
		μPC301	
	Raytheon	LM301	
	RCA	CA301	
		LM301	
	SiliconG	SG301	
	TI	LM301	
		LM301A	
	Toshiba	TA7506	
LM304	National	LM304	
	NEC	μPC142	
	SiliconG	SG304	
LM311	AD	AD311	
	Fairchild	μA311	
	LinearTech	LM311	
	Motorola	**LM2903**	**3631**
		LM311	**3631**
	National	LM2903	
		LM311	
	NEC	μPC271	
		μPC311	
	Raytheon	LM311	
	RCA	**CA311**	**3672,3677**
		LM311	
	SGS	LM2903	
		LM311	
	Signetics	**LM2903**	**3725**
		LM311	**3721**
	SiliconG	SG311	
	TI	LM2903	
		LM311	
	ThomsonCSF	LM2903	
		SFC3111	
LM317	Fairchild	μA317	
	IPS	**IP317**	**3599**
	LinearTech	LM317	
	MCE	MCE-LM317	
	Motorola	**LM317**	**3625**
	National	LM317	
	SGS	LM317	
	SiliconG	SG317	
	TI	LM317	
	ThomsonCSF	TDB0117	
	Unitrode	UC317	
LM318	AD	AD518	
	Harris	LM318	
	LinearTech	LM318	
	National	LM318	
	NEC	μPC159	
		(Continued)	
LM318	TI	LM318	
	ThomsonCSF	TDB0118	
LM319	NEC	μPC319	
	Signetics	**LM319**	**3723**
LM323	Fairchild	SH0323	
		SH323	
		μA323	
		μA78H05	
	IPS	IP123-5	
		IP323	**3599**
	Lambda	LAS1405	
		LAS1905	
	LinearTech	LM323	
	Micropac	M78H05	
	Motorola	**LM323**	**3622**
		MC78T05C	**3622**
	SiliconG	SG323	
LM324	National	LM324	
	SGS	LM324	
	Samsung	**LM324**	**3679**
LM339	AMD	LM339A	
	Fairchild	μA339	
	Hitachi	HA17901	
	Motorola	**LM339**	**3631**
	National	LM339	
	NEC	μPC339	
	PMI	CMP-04	
		PM339A	
	Raytheon	LM339	
	RCA	**CA339**	**3672,3677**
		CA339A	**3672,3677**
		LM339	
	SGS	LM339	
	TI	LM339	
	ThomsonCSF	TDB0139	
LM346	Exar	XR346	
	Harris	HA2740	
	National	LM346	
LM358	**Motorola**	**LM358**	**3617**
	National	LM358A	
	NEC	μPC358	
	RCA	**CA358A**	**3672**
		LM358	
	Sanyo	LA6358	
	SGS	LM358	
	Signetics	**LM358**	**3722,3729**
		NE532	**3729**
	TI	LM358	
LM555	Exar	XR555	
	Fairchild	μA555	
	Hitachi	HA17555	
	Intersil	NE555	
	Mitsubishi	M51841	
		M51848	
		M5251	
		M5E555	
	Motorola	MC1455	
	NEC	μPC1555	
	Raytheon	RC555	
	RCA	CA555	
	Sanyo	LB8555	
	SGS	NE555	
	Signetics	**NE555**	**3721**
		NE555N	
	TI	NE555	
	Samsung	**NE555**	**3679**
LM556	Mitsubishi	M5E556	
	SGS	NE556	
	Signetics	**NE556**	**3721**
	Samsung	**NE556**	**3679**
LM723	Fairchild	μA723	
	Hitachi	HA17723	
	Intersil	LM723	
	Motorola	**MC1723**	**3625**
	National	LM723	
	Raytheon	RC723	
		RM723	
	RCA	CA723	
		LM723	
	SGS	L123	
		LM723	
	Signetics	**μA723**	**3721,3730**
	SiliconG	SG723	
	TI	μA723	
LM748	National	LM748	
	SGS	LM748	
		LS148	
	SiliconG	SG201	
	TI	LM201	
		SN72748P	
		μA748	
	ThomsonCSF	LM201	

◆ Discontinued

The manufacturers report their devices can be used as direct replacements.
Performance details often differ, so compare the specifications considering your requirements.

Thomson-CSF Components Corporation (Cont'd)

Manufacturer Device	Replacement Source	Device	IC Master Page
SFC	Fairchild	UA3046	
	Motorola	**MC3346**	**3614**
	National	LM3046	
	Plessey	SL3046	
		SL3146	
	RCA	**CA3046**	**3678**
		CA3146	**3678**
	Sanyo	LA3046	
	SGS	CA3046	
		TBA331	
	SiliconG	SG3046	
		SG3146	
		SG3821	
	Sprague	ULN-2046	
SFC2018	National	LM3018	
	RCA	**CA3018**	**3678**
SFC2054	Fairchild	UA3054	
	Motorola	**CA3054**	**3614**
	National	LM3054	
	RCA	**CA3054**	**3678**
	Sprague	ULN-2054	
SFC2086	Fairchild	UA3086	
	Motorola	**MC3386**	**3614**
	National	LM3086	
	Plessey	SL3086	
	RCA	**CA3086**	**3678**
	Sanyo	LA3086	
	SiliconG	SG3086	
		SG3886	
	Sprague	ULN-2086	
SFC2109	Fairchild	μA109	
	IPS	**IP140-5**	**3599**
	Motorola	LM109	
	National	LM109	
	SiliconG	SG109	
SFC2524	ThomsonCSF	SFC2525	
SFC2525	ThomsonCSF	SFC2524	
SFC2528	Motorola	MC7528	
	Raytheon	RC7528	
	TI	SN7528	
SFC2709	Fairchild	μA709	
	Hitachi	HA1303	
	Motorola	**MC1709**	**3615**
	National	LM1709	
		LM709	
	NEC	μPC255	
		μPC55	
	RCA	**CA3038**	**3672**
	TI	μA709	
	Toshiba	TA7502	
SFC2812	Fairchild	μA78L12	
	Motorola	MC78L12	
	National	LM340LA-12	
		LM78L12	
	NEC	μPC78L12	
	TI	μA78L12	
	ThomsonCSF	μA7812	
SFC2901	**Fairchild**	**29F01**	**1028**
		F2901A	
	National	IDM2901A	
SFC2902	AMD	AM2902	
SFC2903	AMD	AM2903	
SFC2909	Cypress	CY7C909	
	National	IDM2909	
SFC2910	Fairchild	29F10	
	Motorola	MC2910	
SFC2914	AMD	AM2914	
SFC2915	AMD	AM2915	
SFC2917	AMD	AM2917	
SFC2918	AMD	AM2918	
SFC2919	AMD	AM2919	
SFC3111	AD	AD311	
	Fairchild	μA311	
	LinearTech	LM311	
	Motorola	**LM2903**	**3631**
		LM311	**3631**
	National	LM2903	
		LM311	
	NEC	μPC271	
		μPC311	
	Raytheon	LM311	
	RCA	**CA311**	**3672,3677**
		LM311	
	SGS	LM2903	
		LM311	
	Signetics	**LM2903**	**3725**
		LM311	**3721**
	SiliconG	SG311	
	TI	LM2903	
			(Continued)
SFC3111	TI	LM311	
	ThomsonCSF	LM2903	
		LM311	
SFC71191A	EXEL	XL46C16	
	Fairchild	932511M	
	Fujitsu	MB7138E	
	Harris	HM6616	
		HM76161	
	Hitachi	HN25169S	
	MMI	**53S1681**	**4101**
	Motorola	**MCM76161**	**4124**
	National	DM77S191	
		DM77S191A	
		DM77S291	
		DM77S291A	
	Raytheon	**29681**	**4134**
		29681A	**4134**
		29683	**4134**
		29683A	**4134**
TBA1440G	Siemens	TBA1440G	
TBA2540	Plessey	TDA2540	
	Signetics	**TDA2540**	**3731**
TBA800	Fairchild	TBA800	
	Plessey	TBA800	
	SGS	TBA800	
	Telefunken	TDA800	
TBA810	SGS	TBA810	
TBA820	MCE	MCE-820	
	SGS	TBA820	
	TI	SN76001	
TBA830	SGS	TBA830	
TBA920	Plessey	TBA920	
TCA900	SGS	TCA900	
TDA1048	Siemens	TDA1048	
TDA1170	Fairchild	μA7327	
	SGS	TDA1170	
	Sprague	ULN-2270	
	Telefunken	TDA1170	
TDA2003	Fairchild	TDA2003	
	Sprague	ULN-3703	
TDA2006	SGS	TDA2006	
TDA2030	SGS	TDA2030	
	Telefunken	TDA2030	
TDA2541	Plessey	TDA2541	
	Signetics	**TDA2541**	**3717,3731**
TDA2593	National	TDA2593	
	Plessey	TDA2593	
	Signetics	**TDA2593**	**3731**
	Telefunken	TDA2593	
TDB0117	Fairchild	μA317	
	IPS	**IP317**	**3599**
	LinearTech	LM317	
	MCE	MCE-LM317	
	Motorola	**LM317**	**3625**
	National	LM317	
	SGS	LM317	
	SiliconG	SG317	
	TI	LM317	
	ThomsonCSF	LM317	
	Unitrode	UC317	
TDB0118	AD	AD518	
	Harris	LM318	
	LinearTech	LM318	
	National	LM318	
	NEC	μPC159	
	TI	LM318	
	ThomsonCSF	LM318	
TDB0137	**IPS**	**IP337**	**3599**
	LinearTech	LM337	
	MCE	MCE-LM337	
	Motorola	**LM337**	**3625**
	National	LM337	
	SiliconG	SG337	
	TI	LM337	
	Unitrode	UC337	
TDB0139	AMD	LM339A	
	Fairchild	μA339	
	Hitachi	HA17901	
	Motorola	**LM339**	**3631**
	National	LM339	
	NEC	μPC339	
	PMI	CMP-04	
		PM339A	
	Raytheon	LM339	
	RCA	**CA339**	**3672,3677**
		CA339A	**3672,3677**
		LM339	
	SGS	LM339	
	TI	LM339	
	ThomsonCSF	LM339	
TDB0351	ThomsonCSF	TL071	
TDB0353	**Exar**	**XR082**	**3555**
	RCA	**CA082**	**3672,3676**
	SGS	TL082	
	TI	TL082	
TDB2905	**IPS**	**IP120-5**	**3599**
	Motorola	MC7952	
	National	LM320-5	
	SGS	L7952	
	SiliconG	SG320-5	
	TI	LM320-5	
TDC0117	Fairchild	μA117	
	IPS	**IP117**	**3599**
	LinearTech	LM117	
	MCE	MCE-LM117	
	Motorola	**LM117**	**3625**
	SiliconG	SG117	
	TI	LM117	
	ThomsonCSF	LM117	
	Unitrode	UC117	
TDC0137	**IPS**	**IP137**	**3599**
	LinearTech	LM137	
	MCE	MCE-LM137	
	Motorola	**LM137**	**3625**
	National	LM137	
	ThomsonCSF	LM137	
	Unitrode	UC137	
TDE0117	**IPS**	**IP217**	**3599**
	MCE	MCE-LM217	
	Motorola	**LM217**	**3625**
	National	LM217	
	SiliconG	SG217	
	TI	LM217	
	Unitrode	UC217	
TDE0118	National	LM218	
	TI	LM218	
TDE0119	National	LM219	
	Signetics	**LM219**	**3725**
TDE0123	Fairchild	SH223	
		μA223	
	IPS	**IP223**	**3599**
	Lambda	LLM223	
	Motorola	**LM223**	**3622**
	National	LM223	
	SiliconG	SG223	
TDE0139	Fairchild	UA250	
		UA26LS31	
		UA26LS32	
		μA239	
	Motorola	**LM239**	**3631**
	National	LM239	
	PMI	CMP-04	
		PM239	
	Raytheon	LM239	
	RCA	**CA239**	**3672,3677**
	Signetics	LM239	
	TI	LM239	
TDE0146	Exar	XR246	
	National	LM246	
TDE0148	National	LM248	
	TI	LM248	
TDE0155	MicroPwr	MP255	
	National	LF255	
	PMI	PM255	
TDE0156	National	LF256	
TDE0158	**Motorola**	**LM258**	**3617**
	National	LM258A	
	RCA	**CA258A**	**3672**
	Signetics	**LM258**	**3729**
	TI	LM258	
TL062	TI	TL062	
TL064	TI	TL064	
TL071	ThomsonCSF	TDB0351	
TL081	PMI	OP-16	
	RCA	**CA081**	**3672,3676**
	ThomsonCSF	LF351	
μ78515	SGS	L78515	
μ78S05	SGS	L7805	
μ78S09	SGS	L78S09	
μ78S12	SGS	L78S12	
μA1458	Fairchild	UA1458HC	
	Harris	CM1458	
		HA5102	
	MicroPwr	MPOP14	
	Motorola	**MC1458**	**3617**
	National	LF412	
	NEC	MPC251	
	PMI	OP14	
	RCA	**CA1458**	**3672**
	SGS	MC1458	
	Signetics	**SA1458**	**3729**
	Samsung	**MC1458**	**3679**
		MC4558	**3679**
μA741	MicroPwr	MPOP02	
	National	LM741	
	Plessey	SL562	
	PMI	**OP-02**	**3636**
	SGS	LM741	
		LS141	
	Samsung	LM741	
μA776	Harris	HA-2720	
	Intersil	ICL7611	
		ICL8021	
		LM4250	
	Maxim	ICL7611	
	Motorola	**MC1776**	**3616**
	National	LF441	
		LM4250	
	PMI	OP20	
		OP21	
		OP22	
	SGS	MC1776	
	Solitron	UC4250	
	TI	TLC251	
		TLC271	
μA7805	Fairchild	μA78L05	
	Motorola	MC78L05	
	National	LM340LA-5	
		LM78L05	
	NEC	μPC78L05	
	TI	μA78L05	
μA7806	Lambda	LMC7806	
		LμA7806	
	Motorola	**MC7806**	**3623**
	SiliconG	SG340-6	
		SG7806	
	TI	μA7806	
	Samsung	MC7806	
μA7808	Lambda	LMC7808	
		LμA7808	
	Motorola	**MC7808**	**3623**
	NEC	μPC7808	
	SiliconG	SG340-8	
		SG7808	
	TI	μA7808	
	Samsung	MC7808	
μA7812	Fairchild	μA78L12	
	Motorola	MC78L12	
	National	LM340LA-12	
		LM78L12	
	NEC	μPC78L12	
	TI	μA78L12	
	ThomsonCSF	SFC2812	
μA7815	Fairchild	μA7815	
		μA78L15	
	IPS	**IP140-15**	**3599**
		IP340-15	**3599**
		IP7815	**3599**
	Lambda	LAS1515	
		LMC7815	
		LμA7815	
	Motorola	**MC7815**	**3624**
		MC78L15	
	National	LM340-15	
		LM340LA-15	
		LM340T-15	
		LM7815	
		LM78L15	
	NEC	μPC7815	
		μPC78L15	
	SGS	L7815	
	SiliconG	SG340-15	
		SG7815	
	TI	LM340-15	
		μA7815	
		μA78L15	
	Toshiba	TA78015	
	Samsung	MC7815	
	Unitrode	UC7815	
μA7818	Lambda	LMC7818	
	NEC	μPC7818	
	SiliconG	SG340-18	
		SG7818	
	TI	LM340-18	
		μA7818	
μA7824	Lambda	LMC7824	
		LμA7824	
	Motorola	**MC7824**	**3624**
	NEC	μPC7824	
	SGS	L7824	
	SiliconG	SG7824	
	TI	LM340-24	
		μA7824	
	Samsung	MC7824	

◆ Discontinued

Bold face device numbers indicate manufacturers data is provided in the IC Master on the pages noted.

Thomson-CSF Components Corporation (Cont'd)

Manufacturer Device	Replacement Source	Device	IC Master Page
µA7912	Fairchild	µA7912	
		µA79M12	
	IPS	**IP320-12**	**3599**
		IP7912	**3599**
	Motorola	MC7912	
	National	LM320MP12	
		LM7912	
		LM79M12	
	NEC	µPC7912	
	SGS	L7912	
	SiliconG	SG320P-12	
		SG7912	
	TI	LM320-12	
		µA7912	
	Samsung	MC7912	
	Unitrode	UC7912	
µA7915	Fairchild	µA7915	
	IPS	**IP320-15**	**3599**
		IP7915	**3599**
	Motorola	MC7915	
	National	LM320-15	
		LM320T15	
		LM7915	
	NEC	µPC7915	
	SGS	L7915	
	SiliconG	SG320-15	
		SG7915	
	TI	LM320-5	
		µA7915	
	Samsung	MC7915	
	Unitrode	UC7915	

Toshiba America

Manufacturer Device	Replacement Source	Device	IC Master Page
5101	GouldAMI	S6551	
	National	6551	
	RCA	1822	
	Rockwell	R6551	
5508	Fujitsu	8401	
	GouldAMI	6508	
	Harris	HM6508	
	Intersil	6508	
		IM6508-1	
	MicroPwr	6508	
	National	6508	
		74C929	
	NEC	443	
	RCA	6508	
◆TA7084	Motorola	MC1461	
TA7157	Exar	XR1310	
	National	LM1310	
	TI	SN76115	
TA7502	Fairchild	µA709	
	Hitachi	HA1303	
	Motorola	**MC1709**	**3615**
	National	LM1709	
		LM709	
	NEC	µPC255	
		µPC55	
	RCA	**CA3038**	**3672**
	TI	µA709	
	ThomsonCSF	SFC2709	
TA7506	AD	AD301	
	Fairchild	µA301A	
	Intersil	AD301	
	LinearTech	LM301	
		LM301A	
	Motorola	LM301	
	National	LM301	
		LM301A	
	NEC	µPC157	
		µPC301	
	Raytheon	LM301	
	RCA	CA301	
		LM301	
	SiliconG	SG301	
	TI	LM301	
		LM301A	
	ThomsonCSF	LM301A	
TA7607	RCA	CA7607	
TA7611	RCA	CA7611	
TA7613	Sprague	ULN-2204	
	Telefunken	TDA1083	
		U417B	
TA78012	Fairchild	µA7812	
	IPS	**IP140-12**	**3599**
		IP340-12	**3599**
		IP7812	**3599**
	Lambda	LMC7812	
TA78012	Lambda	LµA7812	
	Motorola	**MC7812**	**3623**
	National	LM7812	
	NEC	µPC7812	
	SGS	L7812	
	SiliconG	SG340-12	
		SG7812	
	TI	µA7812	
	Samsung	MC7812	
	Unitrode	UC7812	
TA78015	Fairchild	µA7815	
		µA78L15	
	IPS	**IP140-15**	**3599**
		IP340-15	**3599**
		IP7815	**3599**
	Lambda	LAS1515	
		LMC7815	
		LµA7815	
	Motorola	**MC7815**	**3624**
		MC78L15	
	National	LM340-15	
		LM340LA-15	
		LM340T-15	
		LM7815	
		LM78L15	
	NEC	µPC7815	
		µPC78L15	
	SGS	L7815	
	SiliconG	SG340-15	
		SG7815	
	TI	LM340-15	
		µA7815	
		µA78L15	
	ThomsonCSF	µA7815	
	Samsung	MC7815	
	Unitrode	UC7815	
TC15G008	**LSILogic**	**LL5080**	**4676**
	Motorola	**HCA6306**	**4718**
	National	SCX6306	
	RCA	PAS0800	
TC15G014	**LSILogic**	**LL5140**	**4676**
	Motorola	**HCA6312**	**4718**
	National	SCX6312	
	RCA	**PA51400**	**4742**
TC15G022	**LSILogic**	**LL5220**	**4676**
	Motorola	**HCA6324**	**4718**
	National	SCX6324	
		SCX6325	
	RCA	**PA52200**	**4742**
TC15G032	**LSILogic**	**LL5320**	**4676**
	RCA	**PA53200**	**4742**
TC15G042	**LSILogic**	**LL5420**	**4676**
	Motorola	**HCA6348**	**4718**
	National	SCX6348	
	RCA	**PA54200**	**4742**
TC15G060	**LSILogic**	**LL5600**	**4676**
	RCA	**PA56000**	**4742**
TC17G005	LSILogic	LL7050	
TC17G008	**LSILogic**	**LL7080**	**4676**
TC17G014	**LSILogic**	**LL7140**	**4676**
	National	SCX6212	
TC17G022	**LSILogic**	**LL7220**	**4676**
	National	SCX6224	
		SCX6225	
TC17G032	**LSILogic**	**LL7320**	**4676**
TC17G042	**LSILogic**	**LL7420**	**4676**
	National	SCX6248	
TC17G060	**LSILogic**	**LL7600**	**4676**
	National	SCX6260	
TC17G100	**LSILogic**	**LL71000**	**4676**
TC4001	Fairchild	F4001	
	Motorola	MC14001	
	National	CD4001	
		MM74C02	
	OKI	MSM4001	
	RCA	CD4001	
	Sanyo	LC4001B	
	SGS	HCC/HCF4001	
	Signetics	HEF4001	
	Solitron	CM4001	
	SSS	SCL4001	
TC4002	Fairchild	F4002	
	Motorola	MC14002	
	National	CD4002	
	RCA	CD4002	
	SGS	HCC/HCF4002	
	Signetics	HEF4002	
	Solitron	CM4002	
	SSS	SCL4002	
TC4006	Fairchild	F4006	
	National	CD4006	
	RCA	CD4006	
TC4006	SGS	HCC/HCF4006	
	Signetics	HEF4006	
	Solitron	CM4006	
	SSS	SCL4006	
TC4007	Fairchild	F4007	
	Motorola	MC14007	
	National	CD4007	
	RCA	CD4007	
	SGS	HCC/HCF4007	
	Signetics	HEF4007	
	Solitron	CM4007	
	SSS	SCL4007	
TC4008	Fairchild	F4008	
	Motorola	MC14008	
	National	CD4008	
		MM74C83	
	RCA	CD4008	
	SGS	HCC/HCF4008	
	Signetics	HEF4008	
	Solitron	CM4008	
	SSS	SCL4008	
TC4009	National	CD4009	
	RCA	CD4009	
	SGS	HCC/HCF4009	
	Solitron	CM4009	
	SSS	SCL4009	
TC4010	National	CD4010	
	RCA	CD4010	
	SGS	HCC/HCF4010	
	Solitron	CM4010	
	SSS	SCL4010	
TC40107	RCA	CD40107	
	SGS	HCC/HCF40107	
TC4011	Fairchild	F4011	
	Motorola	MC14011	
	National	CD4011	
		MM74C00	
	OKI	MSM4011	
	RCA	CD4011	
	Sanyo	LC4011	
	SGS	HCC/HCF4011	
	Signetics	HEF4011	
	Solitron	CM4011	
	SSS	SCL4011	
TC4012	Fairchild	F4012	
	Motorola	MC14012	
	National	CD4012	
	RCA	CD4012	
	SGS	HCC/HCF4012	
	Signetics	HEF4012	
	Solitron	CM4012	
	SSS	SCL4012	
TC4013	Fairchild	F4013	
	Motorola	MC14013	
	National	CD4013	
		MM74C74	
	OKI	MSM4013	
	RCA	CD4013	
	Sanyo	LC4013	
	SGS	HCC/HCF4013	
	Signetics	HEF4013	
	Solitron	CM4013	
	SSS	SCL4013	
TC4014	Fairchild	F4014	
	Motorola	MC14014	
	National	CD4014	
	RCA	CD4014	
	SGS	HCC/HCF4014	
	Signetics	HEF4014	
	Solitron	CM4014	
	SSS	SCL4014	
TC4015	Fairchild	F4015	
	Motorola	MC14015	
	National	CD4015	
		MM74C164	
	OKI	MSM4015	
	RCA	CD4015	
	Sanyo	LC4015	
	SGS	HCC/HCF4015	
	Signetics	HEF4015	
	Solitron	CM4015	
	SSS	SCL4015	
TC4016	Fairchild	F4016	
		F4066	
	Motorola	MC14016	
		MC14066	
	National	CD4016	
		CD4066	
	RCA	CD4016	
		CD4066	
	Sanyo	LC4016	
		LC4066	
TC4016	SGS	HCC/HCF4016	
		HCC/HCF4066	
	Signetics	HEF4016	
		HEF4066	
	Solitron	CM4016	
		CM4066	
		HCF4016	
	SSS	SCL4016	
		SCL4066	
	Toshiba	TC4066	
TC4017	Fairchild	F4017	
	Motorola	MC14017	
	National	CD4017	
	RCA	CD4017	
	SGS	HCC/HCF4017	
	Signetics	HEF4017	
	Solitron	CM4017	
	SSS	SCL4017	
TC40175	Fairchild	F40175	
	Motorola	MC14175	
	National	CD40175	
		MM54C175	
		MM74C175	
	Signetics	HEF40175	
TC4018	Fairchild	F4018	
	Motorola	MC14018	
	National	CD4018	
	RCA	CD4018	
	SGS	HCC/HCF4018	
	Signetics	HEF4018	
	Solitron	CM4018	
	SSS	SCL4018	
TC4019	Fairchild	F4019	
	National	CD4019	
	OKI	MSM4019	
	RCA	CD4019	
	Sanyo	LC4019	
	SGS	HCC/HCF4019	
	Signetics	HEF4019	
	Solitron	CM4019	
	SSS	SCL4019	
TC40192	Fairchild	F4029	
	Motorola	MC14029	
	National	CD40192	
		CD4029	
	RCA	CD40192	
		CD4029	
	SGS	HCC/HCF40192	
		HCC/HCF4029	
	Signetics	HEF40192	
	Solitron	CM4029	
	SSS	SCL4029	
		SCL4192	
	Toshiba	TC4029	
TC40193	Fairchild	F40193	
	National	CD40193	
		MM54C193	
		MM74C193	
	RCA	CD40193	
	SGS	HCC/HCF40193	
	Signetics	HEF40193	
	SSS	SCL4193	
TC4020	Fairchild	F4020	
	Motorola	MC14020	
	National	CD4020	
	RCA	CD4020	
	SGS	HCC/HCF4020	
	Signetics	HEF4020	
	Solitron	CM4020	
	SSS	SCL4020	
TC4021	Fairchild	F4021	
	Motorola	MC14021	
	National	CD4021	
	RCA	CD4021	
	SGS	HCC/HCF4021	
	Signetics	HEF4021	
	SSS	SCL4021	
TC4022	Fairchild	F4022	
	Motorola	MC14022	
	National	CD4022	
	RCA	CD4022	
	SGS	HCC/HCF4022	
	Signetics	HEF4022	
	Solitron	CM4022	
	SSS	SCL4022	
TC4023	Fairchild	F4023	
	Motorola	MC14023	
	National	CD4023	
		MM74C10	
	RCA	CD4023	
	SGS	HCC/HCF4023	
	Signetics	HEF4023	

(Continued)

◆ Discontinued

The manufacturers report their devices can be used as direct replacements.
Performance details often differ, so compare the specifications considering your requirements.

Toshiba America (Cont'd)

Manufacturer Device	Replacement Source	Device	IC Master Page
TC4023	Solitron	CM4023	
	SSS	SCL4023	
TC4024	Fairchild	F4024	
	Motorola	MC14024	
	National	CD4024	
	RCA	CD4024	
	SGS	HCC/HCF4024	
	Signetics	HEF4024	
	Solitron	CM4024	
	SSS	SCL4024	
TC4025	Fairchild	F4025	
	Motorola	MC14025	
	National	CD4025	
	RCA	CD4025	
	SGS	HCC/HCF4025	
	Signetics	HEF4025	
	Solitron	CM4025	
	SSS	SCL4025	
◆TC4027	Fairchild	F4027	
	Motorola	MC14027	
	National	CD4027	
		MM74C76	
	OKI	MSM4027	
	RCA	CD4027	
	Sanyo	LC4027	
	SGS	HCC/HCF4027	
	Signetics	HEF4027	
	Solitron	CM4027	
	SSS	SCL4027	
TC4028	Fairchild	F4028	
	Motorola	MC14028	
	National	CD4028	
		MM74C42	
	OKI	MSM4028	
	RCA	CD4028	
	Sanyo	LC4028	
	SGS	HCC/HCF4028	
	Signetics	HEF4028	
	Solitron	CM4028	
	SSS	SCL4028	
TC4029	Fairchild	F4029	
	Motorola	MC14029	
	National	CD40192	
		CD4029	
	RCA	CD40192	
		CD4029	
	SGS	HCC/HCF40192	
		HCC/HCF4029	
	Signetics	HEF40192	
	Solitron	CM4029	
	SSS	SCL4029	
		SCL4192	
	Toshiba	TC40192	
TC4030	Fairchild	F4030	
	National	CD4030	
	RCA	CD4030	
	SGS	HCC/HCF4030	
	Signetics	HEF4030	
	Solitron	CM4030	
	SSS	SCL4030	
TC4032	Motorola	MC14032	
	RCA	CD4032	
	SGS	HCC/HCF4032	
	Solitron	CM4032	
TC4034	Fairchild	F4034	
	Motorola	MC14034	
	National	CD4034	
	RCA	CD4034	
	SGS	HCC/HCF4034	
	Solitron	CM4034	
	SSS	SCL4034	
TC4035	Fairchild	F4035	
	Motorola	MC14035	
	RCA	CD4035	
	SGS	HCC/HCF4035	
	Signetics	HEF4035	
	Solitron	CM4035	
TC4036	RCA	CD4036	
	Solitron	CM4036	
TC4038	Motorola	MC14038	
	RCA	CD4038	
	SGS	HCC/HCF4038	
	Solitron	CM4038	
TC4039	RCA	CD4039	
	Solitron	CM4039	
TC4040	Fairchild	F4040	
	Motorola	MC14040	
	National	CD4040	
	RCA	CD4040	
	SGS	HCC/HCF4040	
TC4040	Signetics	HEF4040	
	Solitron	CM4040	
	SSS	SCL4040	
TC4042	Fairchild	F4042	
	Motorola	MC14042	
	National	CD4042	
	RCA	CD4042	
	SGS	HCC/HCF4042	
	Signetics	HEF4042	
	Solitron	CM4042	
	SSS	SCL4042	
TC4043	Motorola	MC14043	
	National	CD4043	
	RCA	CD4043	
	SGS	HCC/HCF4043	
	Signetics	HEF4043	
	Solitron	CM4043	
	SSS	SCL4043	
TC4044	Fairchild	F4044	
	Motorola	MC14044	
	National	CD4044	
	RCA	CD4044	
	SGS	HCC/HCF4044	
	Signetics	HEF4044	
	Solitron	CM4044	
TC4047	Fairchild	F4047	
	National	CD4047	
	RCA	CD4047	
	SGS	HCC/HCF4047	
	Signetics	HEF4047	
	Solitron	CM4047	
	SSS	SCL4047	
TC4049	Fairchild	F4049	
	Motorola	MC14049	
	National	CD4049	
	OKI	MSM4049	
	RCA	CD4049	
	Sanyo	LC4049	
	SGS	HCC/HCF4049	
	Signetics	HEF4049	
	Solitron	CM4049	
	SSS	SCL4049	
TC4050	Fairchild	F4050	
	Motorola	MC14050	
	National	CD4050	
	RCA	CD4050	
	SGS	HCC/HCF4050	
	Signetics	HEF4050	
	Solitron	CM4050	
	SSS	SCL4050	
TC4051	Fairchild	F4051	
	Motorola	MC14051	
	National	CD4051	
	RCA	CD4051	
	SGS	HCC/HCF4051	
	Signetics	HEF4051	
	Solitron	CM4051	
	SSS	SCL4051	
TC4052	AD	AD7502	
	Datel	MVD409	
	Harris	HI1828A	
	MicroPwr	MP7502	
	National	CD4052	
	Solitron	CM4052	
	SSS	SCL4052	
TC4053B	Fairchild	F4053	
	Motorola	MC14053	
	National	CD4053	
	RCA	CD4053	
	SGS	HCC/HCF4053	
	Signetics	HEF4053	
	Solitron	CM4053	
	SSS	SCL4053	
TC4054	RCA	CD4054	
	SGS	HCC/HCF4054	
TC4055	Mitel	MD4055	
	RCA	CD4055	
	SGS	HCC/HCF4055	
TC4063	RCA	CD4063	
	SGS	HCC/HCF4063	
TC4066	Fairchild	F4016	
		F4066	
	Motorola	MC14016	
		MC14066	
	National	CD4016	
		CD4066	
	RCA	CD4016	
		CD4066	
	Sanyo	LC4016	
		LC4066	
	SGS	HCC/HCF4016	
		HCC/HCF4066	
TC4066	Signetics	HEF4016	
		HEF4066	
	Solitron	CM4016	
		CM4066	
		HCF4016	
	SSS	SCL4016	
		SCL4066	
	Toshiba	TC4016	
TC4068	Fairchild	F4068	
	Motorola	MC14068	
	RCA	CD4068	
	SGS	HCC/HCF4068	
	Signetics	HEF4068	
	Solitron	CM4068	
	SSS	SCL4068	
TC4069	Fairchild	F4069	
	Motorola	MC14069	
	National	CD4069	
		MM54C04	
		MM74C04	
	OKI	MSM4069	
	RCA	CD4069	
	Sanyo	LC4069	
	SGS	HCC/HCF4069	
	Signetics	HEF4069	
	Solitron	CM4069	
	SSS	SCL4069	
		SCL4449	
TC4071	Fairchild	F4071	
	Motorola	MC14071	
	National	CD4071	
		MM74C32	
	OKI	MSM4071	
	RCA	CD4071	
	Sanyo	LC4071	
	SGS	HCC/HCF4071	
	Signetics	HEF4071	
	Solitron	CM4071	
	SSS	SCL4071	
TC4072	Fairchild	F4072	
	Motorola	MC14072	
	National	CD4072	
	RCA	CD4072	
	SGS	HCC/HCF4072	
	Signetics	HEF4072	
	SSS	SCL4072	
TC4073	Fairchild	F4073	
	Motorola	MC14073	
	National	CD4073	
	RCA	CD4073	
	SGS	HCC/HCF4073	
	Signetics	HEF4073	
	Solitron	CM4073	
	SSS	SCL4073	
TC4075	Fairchild	F4075	
	Motorola	MC14075	
	National	CD4075	
	RCA	CD4075	
	SGS	HCC/HCF4075	
	Signetics	HEF4075	
	Solitron	CM4075	
	SSS	SCL4075	
TC4076	Fairchild	F4076	
	Motorola	MC14076	
	National	CD4076	
		MM54C173	
		MM74C173	
	RCA	CD4076	
	SGS	HCC/HCF4076	
	Signetics	HEF4076	
	Solitron	CM4076	
	SSS	SCL4076	
TC4078	Fairchild	F4078	
	Motorola	MC14078	
	RCA	CD4078	
	SGS	HCC/HCF4078	
	Signetics	HEF4078	
	Solitron	CM4078	
	SSS	SCL4078	
TC4081	Fairchild	F4081	
	Motorola	MC14081	
	National	CD4081	
		MM74C08	
	OKI	MSM4081	
	RCA	CD4081	
	Sanyo	LC4081	
	SGS	HCC/HCF4081	
	Signetics	HEF4081	
	Solitron	CM4081	
	SSS	SCL4081	
TC4082	Fairchild	F4082	
	Motorola	MC14082	
TC4082	National	CD4082	
	RCA	CD4082	
	SGS	HCC/HCF4082	
	Signetics	HEF4082	
	SSS	SCL4082	
TC40H000	Hitachi	HD74HC00	
	Motorola	**MC74HC00**	**1122**
	National	MM74HC00	
	RCA	**CD74HC00**	**1149**
	SPI	SP74HC00	
	SGS	M74HC00	
	Signetics	**74HC00**	**1156**
	TI	SN74HC00	
	Universal	US74HC00	
TC40H002	Hitachi	HD74HC02	
	Motorola	**MC74HC02**	**1122**
	National	MM74HC02	
	RCA	**CD74HC02**	**1149**
	SPI	SP74HC02	
	SGS	M74HC02	
	Signetics	**74HC02**	**1156**
	TI	SN74HC02	
	Universal	US74HC02	
TC40H004	Hitachi	HD74HC04	
	Motorola	**MC74HC04**	**1124**
	National	MM74HC04	
	RCA	**CD74HC04**	**1149**
	SPI	SP74HC04	
	SGS	M74HC04	
	TI	SN74HC04	
	Universal	US74HC04	
TC40H010	Hitachi	HD74HC10	
	Motorola	**MC74HC10**	**1122**
	National	MM74HC10	
	RCA	**CD74HC10**	**1149**
	SPI	SP74HC10	
	SGS	M74HC10	
	Signetics	**74HC10**	**1156**
	SiliconG	SG75474	
	TI	SN74HC10	
	Universal	US74HC10	
TC40H011	Hitachi	HD74HC11	
	Motorola	**MC74HC11**	**1122**
	National	MM74HC11	
	RCA	**CD74HC11**	**1149**
	SPI	SP74HC11	
	SGS	M74HC11	
	Signetics	**74HC11**	**1156**
	TI	SN74HC11	
	Universal	US74HC11	
TC40H020	Hitachi	HD74HC20	
	Motorola	**MC74HC20**	**1122**
	National	MM74HC20	
	RCA	**CD74HC20**	**1149**
	SPI	SP74HC20	
	SGS	M74HC20	
	Signetics	**74HC20**	**1156**
	TI	SN74HC20	
	Universal	US74HC20	
TC40H027	**Motorola**	**MC74HC27**	**1122**
	National	MM74HC27	
	RCA	**CD74HC27**	**1149**
	SPI	SP74HC27	
	SGS	M74HC27	
	Signetics	**74HC27**	**1156**
	TI	SN74HC27	
	Universal	US74HC27	
TC40H032	Hitachi	HD74HC27	
		HD74HC32	
	Motorola	**MC74HC32**	**1122**
	National	MM74HC32	
	RCA	**CD74HC32**	**1149**
	SPI	SP74HC32	
	SGS	M74HC32	
	Signetics	**74HC32**	**1156**
	TI	SN74HC32	
	Universal	US74HC32	
TC40H074	Hitachi	HD74HC74	
	Motorola	**MC74HC74**	**1126**
	National	MM74HC74	
	Nitron	NC74HC74	
	RCA	**CD74HC74**	**1149**
	SPI	SP74HC74	
	SGS	M74HC74	
	Signetics	**74HC74**	**1156**
	TI	SN74HC74	
	Universal	US74HC74	
TC40H076	Hitachi	HD74HC76	
	Motorola	**MC74HC76**	**1126**
	National	MM74HC76	
	SPI	SP74HC76	
	SGS	M74HC76	

(Continued)

◆ Discontinued

Bold face device numbers indicate manufacturers data is provided in the IC Master on the pages noted.

Toshiba America (Cont'd)

Manufacturer Device	Replacement Source	Device	IC Master Page
TC40H076	Signetics	74HC76	
	TI	SN74HC76	
	Universal	US74HC76	
TC40H107	Hitachi	HD74HC107	
	Motorola	**MC74HC107**	**1126**
	National	MM74HC107	
	Nitron	NC74HC107	
	RCA	**CD74HC107**	**1149**
	SPI	SP74HC107	
	SGS	M74HC107	
	Signetics	**74HC107**	**1156**
	TI	SN74HC107	
	Universal	US74HC107	
TC40H139	Hitachi	HD74HC139	
	Motorola	**MC74HC139**	**1130**
	National	MM74HC139	
	Nitron	NC74HC139	
	RCA	**CD74HC139**	**1150**
	SPI	SP74HC139	
	SGS	M74HC139	
	Signetics	**74HC139**	**1157**
	SSS	SS74HC139	
	TI	SN74HC139	
	Universal	US74HC139	
TC40H153	Hitachi	HD74HC153	
	Motorola	**MC74HC153**	**1129**
	National	MM74HC153	
	RCA	**CD74HC153**	**1150**
	SPI	SP74HC153	
	SGS	M74HC153	
	Signetics	**74HC153**	**1157**
	TI	SN74HC153	
	Universal	US74HC153	
TC40H157	Hitachi	HD74HC157	
	Motorola	**MC74HC157**	**1129**
	National	MM74HC157	
	Nitron	NC74HC157	
	RCA	**CD74HC157**	**1150**
	SPI	SP74HC157	
	SGS	M74HC157	
	Signetics	**74HC157**	**1157**
	TI	SN74HC157	
	Universal	US74HC157	
TC40H158	Hitachi	HD74HC158	
	Motorola	**MC74HC158**	**1129**
	National	MM74HC158	
	RCA	**CD74HC158**	**1150**
	SPI	SP74HC158	
	SGS	M74HC158	
	Signetics	**74HC158**	**1157**
	TI	SN74HC158	
	Universal	US74HC158	
TC40H174	Hitachi	HD74HC174	
	Motorola	**MC74HC174**	**1126**
	National	MM74HC174	
	Nitron	NC74HC174	
	RCA	**CD74HC174**	**1149**
	SPI	SP74HC174	
	SGS	M74HC174	
	Signetics	74HC174	
	TI	SN74HC174	
	Universal	US74HC174	
TC40H175	Hitachi	HD74HC175	
	Motorola	**MC74HC175**	**1126**
	National	MM74HC175	
	Nitron	NC74HC175	
	RCA	**CD74HC175**	**1149**
	SPI	SP74HC175	
	SGS	M74HC175	
	Signetics	**74HC175**	**1157**
	TI	SN74HC175	
	Universal	US74HC175	
TC40H192	Hitachi	HD74HC192	
	Motorola	**MC74HC192**	**1127**
	National	MM74HC192	
	RCA	**CD74HC192**	**1150**
	SPI	SP74HC192	
	SGS	M74HC192	
	Signetics	**74HC192**	**1157**
	TI	SN74HC192	
	Universal	US74HC192	
TC40H193	Hitachi	HD74HC193	
	Motorola	**MC74HC193**	**1127**
	National	MM74HC193	
	RCA	**CD74HC193**	**1150**
	SPI	SP74HC193	
	SGS	M74HC193	
	Signetics	**74HC193**	**1157**
	TI	SN74HC193	
	Universal	US74HC193	
TC40H240	Hitachi	HD74HC240	
	Mitel	MD74HC240	
	Motorola	**MC74HC240**	**1124**
	National	MM74HC240	
	Nitron	NC74HC240	
	RCA	**CD74HC240**	**1149**
	SPI	SP74HC240	
	SGS	M74HC240	
	Signetics	**74HC240**	**1157**
	SSS	SS74HC240	
	Supertex	SI74HC240	
	TI	SN74HC240	
	Universal	US74HC240	
	Zytrex	ZX74HC240	
TC4508	Motorola	MC14508	
	National	DM74147	
	RCA	CD4508	
	SGS	HCC/HCF4508	
	Signetics	**74147**	**1157**
		HEF4508	
		N82147	
	Solitron	CM4508	
	SSS	SCL4508	
	TI	SN74147	
TC4510	Fairchild	F4510	
	Motorola	MC14510	
	National	CD4510	
	RCA	CD4510	
	SGS	HCC/HCF4510	
	Signetics	HEF4510	
	Solitron	CM4510	
	SSS	SCL4510	
TC4511	Fairchild	F4511	
	Mitel	MD4511	
	MMI	4511	
	Motorola	MC14511	
	National	CD4511	
	NEC	μPD4511	
	RCA	CD4511	
	SGS	HCC/HCF4511	
	Signetics	HEF4511	
	Solitron	CM4511	
	SSS	SCL4511	
TC4512	Fairchild	F4512	
	Motorola	MC14512	
	National	CD4512	
	RCA	CD4512	
	SGS	HCC/HCF4512	
	SSS	SCL4512	
TC4514	Fairchild	F4514	
	Motorola	MC14514	
	National	CD4514	
	RCA	CD4514	
	SGS	HCC/HCF4514	
	Signetics	HEF4514	
	Solitron	CM4514	
	SSS	SCL4514	
TC4515	Fairchild	F4515	
	Motorola	MC14515	
	National	CD4515	
	RCA	CD4515	
	SGS	HCC/HCF4515	
	Signetics	HEF4515	
	Solitron	CM4515	
	SSS	SCL4515	
TC4516	Fairchild	F4516	
	Motorola	MC14516	
	National	CD4516	
	RCA	CD4516	
	SGS	HCC/HCF4516	
	Signetics	HEF4516	
	Solitron	CM4516	
	SSS	SCL4516	
TC4518	Fairchild	F4518	
	Motorola	MC14518	
	National	CD4518	
	RCA	CD4518	
	SGS	HCC/HCF4518	
	Signetics	HEF4518	
	Solitron	CM4518	
	SSS	SCL4518	
TC4520	Fairchild	F4520	
	Motorola	MC14520	
	National	CD4520	
	OKI	MSM4520	
	RCA	CD4520	
	Sanyo	LC4520	
	SGS	HCC/HCF4520	
	Signetics	HEF4520	
	Solitron	CM4520	
	SSS	SCL4520	
TC4521	Fairchild	F4521	
	Motorola	MC14521	
	RCA	CD4045	
	SGS	HCC/HCF4045	
	Signetics	HEF4521	
	Solitron	CM4045	
	SSS	SCL4445	
TC4526	Fairchild	F4526	
	Motorola	MC14526	
	National	CD4526	
	Signetics	HEF4526	
	SSS	SCL4526	
TC4527	Fairchild	F4527	
	Motorola	MC14527	
	National	CD4527	
	RCA	CD4527	
	SGS	HCC/HCF4527	
	Signetics	HEF4527	
	SSS	SCL4527	
TC4528	Fairchild	F4528	
	Motorola	MC14528	
	National	CD4528	
		MM74C221	
	RCA	CD4098	
	SGS	HCC/HCF4098	
	Signetics	HEF4528	
	SSS	SCL4528	
TC4531	Fairchild	F4531	
	Motorola	MC14531	
	RCA	CD40101	
	SGS	HCC/HCF40101	
	Signetics	HEF4531	
	SSS	SCL4531	
TC4532	Fairchild	F4532	
	Motorola	MC14532	
	RCA	CD4532	
	SGS	HCC/HCF4532	
	Signetics	HEF4532	
	SSS	SCL4532	
TC4539	Fairchild	F4539	
	Motorola	MC14539	
	Signetics	HEF4539	
TC4543	Fairchild	F4543	
	Motorola	MC14543	
		MC14543B	
	National	CD4543	
	RCA	CD4543	
	Signetics	HEF4543	
	SSS	SCL4S43B	
TC4555	Fairchild	F4555	
	Motorola	MC14555	
	RCA	CD4555	
	SGS	HCC/HCF4555	
	Signetics	HEF4555	
	SSS	SCL4555	
TC4556	Fairchild	F4556	
	Motorola	MC14556	
	RCA	CD4556	
	SGS	HCC/HCF4556	
	Signetics	HEF4556	
	SSS	SCL4556	
TC4560	Motorola	MC14560	
TC4561	Motorola	MC14561	
TC4572	Motorola	MC14572	
TC4583	Fairchild	F4583	
	Motorola	MC14583	
TC4585	Fairchild	F40085	
	Motorola	MC14585	
	National	MM74C85	
	RCA	CD4585	
	SGS	HCC/HCF4585	
	Signetics	HEF4585	
	SSS	SCL4585	
TC511001C	Hitachi	HM51101	
		HM51102	
	NEC	μPD411000	
		μPD411001	
TC531000	Fujitsu	MB831000	
		MB831124	
	GI	R091000	
	Hitachi	HN62301	
	NEC	UPD23100	
		UPD231000	
TC53257	VTI	VT23257	
TC5364	Hitachi	HN61364	
	S-MOS	**SMM2365**	**4178**
TC5501	GouldAMI	S5101	
		S6501	
	Harris	MH6501	
	Hitachi	HM435101	
	Intel	5101	
	Motorola	MCM5101	
TC5501	Motorola	MCMS1L01	
	National	MM74C920	
	Panasonic	MNS101	
	RCA	**MWS5101**	**1673,1676**
	Sharp	LH5101	
	SSS	SCM5101	
	Synertek	SY2101	
TC5504	GouldAMI	6504	
	Harris	HM6504	
	Hitachi	4315	
		6147	
	Mitsubishi	58981	
	Motorola	6504	
	National	NMC6504	
	OKI	5104	
	RCA	CDM5104	
	Rockwell	R6504	
	Synertek	SY6504	
TC5514	Harris	HM6514	
	Hitachi	6148	
		HM4334	
	Mitsubishi	58981	
	Motorola	6514	
	NEC	444	
	OKI	5114	
	RCA	MWS5514	
	Rockwell	R6514	
	Synertek	SY6514	
TC5516A	AMD	AM9128	
		AM9218	
	Cypress	CY7C128	
	Fujitsu	MB8128	
		MB8416	
	Harris	HM6116	
		HM6516	
	IDT	IDT6116	
	Intel	2128	
	MicroPwr	MP6116	
	Mitsubishi	M58275	
		M5M116	
		M5M5116	
		M5M5117	
		M5M5118	
		MS8725	
	Motorola	MCM2016	
		MCM2016H	
		MCM2128	
		MCM6116	**4119**
		MCM61L16	**4119**
		MCM65116	
	National	MMC2116	
	NEC	μPD4016	
	OKI	MSM2128	
		MSM5128	**4732,4733**
	RCA	MWS6116A	
	SSS	883C21C16	
		BCM21C16	
		SCM21C16	
		SCM6116	
	TI	TMS4016	
	ThomsonCSF	ET2128	
	Toshiba	TMM2015A	
		TMM2016	
		TMM2016A	**4263**
	Samsung	KM6816	
	UMC	UM2128	
	Universal	US574HC133	
TC5517A	Fujitsu	MB8416	
	Harris	HM65162	
	IDT	6116	
		IDT6116	
	Mitsubishi	5117	
	Mostek	MK6116	
	National	6116	
	NEC	μPD446	
	Nitron	NC6116	
	OKI	**MSM5128**	**4732,4733**
	RCA	CDM6116	
	S-MOS	SRM2016	
	Toshiba	TC5517B	
TC5518B	Fujitsu	MB8418	
	Hitachi	HM6117	
	NEC	μPD449	
	RCA	CDM6118	
	S-MOS	SRM2018	
	UMC	UM2167	
TC55257	Fujitsu	MB84256	
	Hitachi	HM64456	
	NEC	μPD43256	

(Continued)

◆ Discontinued

The manufacturers report their devices can be used as direct replacements.
Performance details often differ, so compare the specifications considering your requirements.

Toshiba America (Cont'd)

Manufacturer Device	Replacement Source	Device	IC Master Page
TC5561	Cypress	CY7C187	
	Fairchild	F1600	
	Hitachi	HM6287	
		HM6787	**4035**
	Inmos	IMS1600	
	IDT	IDT7187	
	Motorola	MCM6287	
	NEC	MPD4361	
	RCA	**CD74HC4515**	**1150**
	SGS	M74HC4515	
	Signetics	PC74HC4515	
	Toshiba	TC5562	
TC5562	Cypress	CY7C187	
	Fairchild	F1600	
	Hitachi	HM6287	
		HM6787	**4035**
	Inmos	IMS1600	
	IDT	IDT7187	
	Motorola	MCM6287	
	NEC	MPD4361	
	RCA	**CD74HC4515**	**1150**
	SGS	M74HC4515	
	Signetics	PC74HC4515	
	Toshiba	TC5561	
TC5564	AMD	AM9988	
		AM9988C	
	Cypress	CY7C186	
	Fujitsu	MB8464	
		MB8464A	
	Hitachi	HM6264	
		HM6464	
	IDT	IDT7188	
		IDT7M864	
	Mitsubishi	M5M5165	
	Motorola	MCM6164	
	NEC	μPD4364	
		μPD4464	
	OKI	MSM5164	
		MSM5165	
	RCA	CDM6264	
	S-MOS	SRM2064	
		SRM2264	**4177,4178**
	Sharp	LH5164	
	Toshiba	TC5565	
		TMM2063	
		TMM2064	
	Samsung	KM6264	
TC5565	AMD	AM9988	
		AM9988C	
	Cypress	CY7C186	
	Fujitsu	MB8464	
		MB8464A	
	Hitachi	HM6264	
		HM6464	
	IDT	IDT7188	
		IDT7M864	
	Mitsubishi	M5M5165	
	Motorola	MCM6164	
	NEC	μPD4364	
		μPD4464	
	OKI	MSM5164	
		MSM5165	
	RCA	CDM6264	
	S-MOS	SRM2064	
		SRM2264	**4177,4178**
	Sharp	LH5164	
	Toshiba	TC5564	
		TMM2063	
		TMM2064	
	Samsung	KM6264	
TC57256	AMD	AM27256	
	Fujitsu	MBM27256	
		MBM27C256	
	GI	R09256	
	Hitachi	HM4827256	
		HN27256	
		HN27C256	**4037**
	Intel	27256	
		27C256	**4079**
	Mitsubishi	M5L27256	
		MSL27256	
	Motorola	MCM67256	
	National	NMC27C256	
	NEC	MPD27256	
		UPD27256	
		UPD27C256	
		UPD27C256A	
	SEEQ	27256	
			(Continued)
TC57256	SEEQ	27C256	
	SGS	M27256	
	SSS	SCM27C128	
	Toshiba	TMM27256	
		TMM27C256	
	VTI	**VT27C256**	**4265,4273**
TC7400	Fairchild	7400	
	National	DM7400	
	Signetics	**7400**	**1156**
	TI	SN7400	
TC7404	Fairchild	7404	
	National	DM7404	
	Signetics	**7404**	**1156**
	TI	SN7404	
TC7410	Fairchild	7410	
	National	DM7410	
	Signetics	**7410**	**1156**
	TI	SN7410	
TC7420	Fairchild	7420	
		9004	
	National	DM7420	
		DM9004C	
	Signetics	**7420**	**1156**
	TI	SN7420	
TC74CH155	Motorola	MC74HC155	
TC74HC03	**Motorola**	**MC74HC03**	**1122**
	National	MM74HC03	
	RCA	**CD74HC03**	**1149**
	SGS	M74HC03	
	TI	SN74HC03	
	Universal	US74HC03	
TC74HC109	Hitachi	HD74HC109	
		HD74HC14	
	Motorola	**MC74HC109**	**1126**
	National	MM74HC109	
	Nitron	NC74HC109	
	RCA	**CD74HC109**	**1149**
	SPI	SP74HC109	
	SGS	M74HC109	
	Signetics	**74HC109**	**1156**
	TI	SN74HC109	
	Universal	US74HC109	
TC74HC125	Hitachi	HD74HC125	
	Motorola	**MC74HC125**	**1124**
	National	MM74HC125	
	SPI	SP74HC125	
	SGS	M74HC125	
	TI	SN74HC125	
	Universal	US74HC125	
TC74HC126	Hitachi	HD74HC126	
	Motorola	**MC74HC126**	**1124**
	National	MM74HC126	
	SPI	SP74HC126	
	SGS	M74HC126	
	TI	SN74HC126	
	Universal	US74HC126	
TC74HC137	Hitachi	HD74HC137	
	Motorola	MC74HC137	
	National	MM74HC137	
	SPI	SP74HC137	
	SGS	M74HC137	
	TI	SN74HC137	
	Universal	US74HC137	
TC74HC148	Hitachi	HD74HC148	
	Nitron	NC74HC148	
	SPI	SP74HC148	
	SGS	M74HC148	
	TI	SN74HC148	
TC74HC190	Hitachi	HD74HC190	
	Motorola	MC74HC190	
	RCA	**CD74HC190**	**1150**
	SGS	M74HC190	
	Signetics	PC74HC190	
		PCF74HC190	
	TI	SN74HC190	
	Universal	US74HC190	
TC74HC21	Hitachi	HD74HC21	
	TI	SN74HC21	
	Universal	US74HC21	
TC74HC237	Hitachi	HD74HC237	
	Motorola	MC74HC237	
	SGS	M74HC237	
	TI	SN74HC137	
		SN74HC237	
	Universal	US74HC237	
TC74HC258	Hitachi	HD74HC258	
	Motorola	MC74HC258	
	TI	SN74HC258	
	Universal	US74HC258	
TC74HC375	Hitachi	HD74HC375	
	Motorola	MC74HC375	
			(Continued)
TC74HC375	TI	SN74HC375	
	Universal	US74HC375	
TC74HC386	Motorola	MC74HC386	
	TI	SN74HC386	
TC74HC4022	SGS	M74HC4022	
TC74HC4075	AMD	AM2167	
	Cypress	CY7C167	
	Inmos	IMS1400	
	Motorola	**MC74HC4075**	**1122**
	Panasonic	MN74HC4075	
	RCA	**CD74HC4075**	**1149**
	SGS	M74HC4075	
	Signetics	PC74HC4075	
	Universal	US74HC4075	
TC74HC4078	**Motorola**	**MC74HC4078**	**1123**
	National	MM74HC4078	
	SPI	SP74HC4078	
	SGS	M74HC4078	
	TI	SN74HC4078A	
	Universal	US74HC4078	
TC74HC423	Hitachi	HD74HC423	
	TI	SN74HC423	
	Universal	US74HC423	
TC74HC4515	TI	SN74HC4515	
TC74HC4543	Cypress	CY7C172	
	IDT	IDT71682	
	Motorola	**MC74HC4543**	**1130**
	National	MM74HC4543	
	RCA	**CD74HC4543**	**1150**
	SGS	M74HC4543	
	Signetics	PC74HC4543	
	Universal	US74HC4543	
TC74HC51	Hitachi	HD74HC51	
	Motorola	MC74HC51	
	National	MM74HC51	
	Nitron	NC74HC51	
	TI	SN74HC51	
	Universal	US74HC51	
TC74HC540	Hitachi	HD74HC540	
	Motorola	**MC74HC540**	**1125**
	RCA	**CD74HC540**	**1149**
	SGS	M74HC540	
	Signetics	**74HC540**	**1159**
	SSS	SS74HC540	
	TI	SN74HC540	
	Universal	US74HC540	
TC74HC573	Hitachi	HD74HC573	
	Motorola	**MC74HC573**	**1126**
	National	MM74HC573	
	RCA	**CD74HC573**	**1150**
	SPI	SP74HC573	
	SGS	M74HC573	
	Signetics	**74HC573**	**1159**
	SSS	SS74HC573	
	TI	SN74HC573	
	Universal	US74HC573	
TC74HC620	Hitachi	HD74HC620	
	TI	SN74HC620	
TC74HC623	Hitachi	HD74HC623	
	TI	SN74HC623	
TC74HC651	Hitachi	HD74HC651	
	Motorola	MC74HC651	
	TI	SN74HC651	
TC74HC652	Hitachi	HD74HC652	
	Motorola	MC74HC652	
	TI	SN74HC652	
TC74HC688	**Motorola**	**MC74HC688**	**1131**
	National	MM74HC688	
	RCA	**CD74HC688**	**1150**
	SGS	M74HC688	
	Signetics	74HC688	
	TI	SN74HC688	
TC74HC73	Hitachi	HD74HC73	
	Motorola	**MC74HC73**	**1126**
	National	MM74HC73	
	RCA	**CD74HC73**	**1149**
	SPI	SP74HC73	
	SGS	M74HC73	
	Signetics	**74HC73**	**1156**
	TI	SN74HC73	
	Universal	US74HC73	
TC74HC75	Hitachi	HD74HC75	
	Motorola	**MC74HC75**	**1126**
	National	MM74HC75	
	RCA	**CD74HC75**	**1150**
	SPI	SP74HC75	
	SGS	M74HC75	
	Signetics	**74HC75**	**1156**
	TI	SN74HC75	
	Universal	US74HC75	
TC74HC77	Hitachi	HD74HC77	
	National	MM74HC77	
			(Continued)
TC74HC77	RCA	CD74HC77	
	SPI	SP74HC77	
	TI	SN74HC77	
TC74HCT137	CTI	74HCT137	
	MicroTech	74HCT137	
		74HCTR137	
	SGS	M74HCT137	
	Supertex	74HCT137	
	TI	SN74HCT137	
	Universal	US74HCT137	
TC74HCT138	CTI	74HCT138	
	IDT	IDT74HCT138	
	Mitel	MD74HCT138	
	Motorola	MC74HCT138	
	Nitron	NC74HCT138	
	Plessey	MV74HCT138	
	RCA	**CD74HCT138**	**1150**
	SPI	SP74HCT138	
	SGS	M74HCT138	
	Signetics	**74HCT138**	**1157**
	SSS	SS74HCT138	
	TI	SN74HCT138	
	Zytrex	ZX74HCT138-2	
TC74HCT240	CTI	74HCT240	
	Hitachi	HD74HCT240	
	Micrel	MIC74HCT240	
	MicroTech	74HCTR240	
	Mitel	MD74HCT240	
	Motorola	MC74HCT240	
	National	MM74HCT240	
	Nitron	NC74HCT240	
	Plessey	MV74HCT240	
	RCA	**CD74HCT240**	**1149**
	SPI	SP74HCT240	
	SGS	M74HCT240	
	Signetics	**74HCT240**	**1157**
	SSS	SS74HCT240	
	Supertex	SI74HCT240	
	TI	SN74HCT240	
	Universal	US74HCT240	
	Zytrex	ZX74HCT240-2	
TC74HCT241	CTI	74HCT241	
	Hitachi	HD74HCT241	
	Micrel	MIC74HCT241	
	MicroTech	74HCTR241	
	Mitel	MD74HCT241	
	Motorola	MC74HCT241	
	National	MM74HCT241	
	Nitron	NC74HCT241	
	Plessey	MV74HCT241	
	RCA	**CD74HCT241**	**1149**
	SPI	SP74HCT241	
	SGS	M74HCT241	
	Signetics	**74HCT241**	**1157**
	SSS	SS74HCT241	
	Supertex	SI74HCT241	
	TI	SN74HCT241	
	Universal	US74HCT241	
	Zytrex	ZX74HCT241-2	
TC74HCT244	CTI	74HCT244	
	Hitachi	HD74HCT244	
	Micrel	MIC74HCT244	
	MicroTech	74HCTR244	
	Mitel	MD74HCT244	
	Motorola	MC74HCT244	
	National	MM74HCT244	
	Nitron	NC74HCT244	
	Plessey	MV74HCT244	
	RCA	**CD74HCT244**	**1149**
	SPI	SP74HCT244	
	SGS	M74HCT244	
	Signetics	**74HCT244**	**1158**
	SSS	SS74HCT244	
	Supertex	SI74HCT244	
	TI	SN74HCT244	
	Universal	US74HCT244	
	Zytrex	ZX74HCT244-2	
TC74HCT245	CTI	74HCT245	
	GTEMicro	G74SC245	
	Hitachi	HD74HCT245	
	Micrel	MIC74HCT245	
	MicroTech	74HCTR245	
	Mitel	MD74HCT245	
	Motorola	MC74HCT245	
	National	MM74HCT245	
	Plessey	MV74HCT245	
		MV74SC245	
	RCA	**CD74HCT245**	**1149**
	SPI	SP74HCT245	
	SGS	M74HCT245	
	Signetics	**74HCT245**	**1158**
	SSS	SS74HCT245	
			(Continued)

◆ Discontinued

Bold face device numbers indicate manufacturers data is provided in the IC Master on the pages noted.

Toshiba America (Cont'd)

Manufacturer Device	Replacement Source	Device	IC Master Page
TC74HCT245	TI	SN74HCT245	
	Universal	US74HCT245	
TC74HCT373	CTI	74HCT373	
	GTEMicro	G74SC373	
	Hitachi	HD74HCT373	
	Micrel	MIC74HCT373	
	MicroTech	74HCTR373	
	Mitel	MD74HCT373	
	Motorola	MC74HCT373	
	National	MM74HCT373	
	Nitron	NC74HCT373	
	Plessey	MV74HCT373	
		MV74SC373	
	RCA	**CD74HCT373**	**1150**
	SPI	SP74HCT373	
	SGS	M74HCT373	
	Signetics	**74HCT373**	**1158**
	SSS	SS74HCT373	
	Supertex	SI74HCT373	
	TI	SN74HCT373	
	Universal	US74HCT373	
	Zytrex	ZX74HCT373-2	
TC74HCT374	CTI	74HCT374	
	GTEMicro	G74SC374	
	Hitachi	HD74HCT374	
	Micrel	MIC74HCT374	
	MicroTech	74HCTR374	
	Mitel	MD74HCT374	
	Motorola	MC74HCT374	
	National	MM74HCT374	
	Nitron	NC74HCT374	
	Plessey	MV74HCT374	
		MV74SC374	
	RCA	CD74HCT374	
	SPI	SP74HCT374	
	SGS	M74HCT374	
	Signetics	**74HCT374**	**1158**
	SSS	SS74HCT374	
	Supertex	SI74HCT374	
	TI	SN74HCT374	
	Universal	US74HCT374	
	Zytrex	ZX74HCT374-2	
TC74HCT540	CTI	74HCT540	
	Hitachi	HD74HCT540	
	Micrel	MIC74HCT540	
	MicroTech	74HCTR540	
	Mitel	MD74HCT540	
	Motorola	MC74HCT540	
	Plessey	MV74HCT540	
	RCA	**CD74HCT540**	**1149**
	SPI	SP74HCT540	
	SGS	M74HCT540	
	Signetics	**74HCT540**	**1159**
	SSS	SS74HCT540	
	TI	SN74HCT540	
	Universal	US74HCT540	
	Zytrex	ZX74HCT540-2	
TC74HCT541	CTI	74HCT541	
	Hitachi	HD74HCT541	
	Micrel	MIC74HCT541	
	MicroTech	74HCTR541	
	Mitel	MD74HCT541	
	Motorola	MC74HCT541	
	Plessey	MV74HCT541	
	RCA	**CD74HCT541**	**1149**
	SPI	SP74HCT541	
	SGS	M74HCT541	
	Signetics	**74HCT541**	**1159**
	SSS	SS74HCT541	
	TI	SN74HCT541	
	Universal	US74HCT541	
	Zytrex	ZX74HCT541-2	
TC74HCT563	CTI	74HCT563	
	Hitachi	HD74HCT563	
	Micrel	MIC74HCT563	
	MicroTech	74HCTR563	
	Motorola	MC74HCT563	
	Plessey	MV74HCT563	
	RCA	**CD74HCT563**	**1150**
	SGS	M74HCT563	
	Signetics	**74HCT563**	**1159**
	SSS	SS74HCT563	
	TI	SN74HCT563	
	Universal	US74HCT563	
TC74HCT564	CTI	74HCT564	
	Hitachi	HD74HCT564	
	Micrel	MIC74HCT564	
	MicroTech	74HCTR564	
	Motorola	MC74HCT564	
	Plessey	MV74HCT564	
			(Continued)
TC74HCT564	Plessey	MV74HCT573	
	RCA	CD74HCT564	
	SGS	M74HCT564	
	Signetics	**74HCT564**	**1159**
	SSS	SS74HCT564	
	TI	SN74HCT564	
	Universal	US74HCT564	
TC74HCT573	CTI	74HCT573	
	Hitachi	HD74HCT573	
	Micrel	MIC74HCT573	
	MicroTech	74HCTR573	
	Mitel	MD74HCT573	
	Motorola	MC74HCT573	
	RCA	**CD74HCT573**	**1150**
	SPI	SP74HCT573	
	SGS	M74HCT573	
	Signetics	**74HCT573**	**1159**
	SSS	SS74HCT573	
	TI	SN74HCT573	
	Universal	US74HCT573	
TC74HCT574	CTI	74HCT574	
	Hitachi	HD74HCT574	
	MicroTech	74HCTR574	
	Mitel	MD74HCT574	
	Motorola	MC74HCT574	
	Plessey	MV74HCT574	
	RCA	CD74HCT574	
	SPI	SP74HCT574	
	SGS	M74HCT574	
	Signetics	**74HCT574**	**1159**
	SSS	SS74HCT574	
	TI	SN74HCT574	
	Universal	US74HCT574	
		US75HCT574	
TC74HCT640	Hitachi	HD74HCT640	
	MicroTech	74HCTR640	
	Motorola	MC74HCT640	
	Nitron	NC74HCT640	
	RCA	**CD74HCT640**	**1149**
	SGS	M74HCT640	
	Signetics	**74HCT640**	**1159**
	SSS	SS74HCT640	
	TI	SN74HCT640	
	Universal	US74HCT640	
	Zytrex	ZX74HCT640-2	
TC74HCT643	Hitachi	HD74HCT643	
	MicroTech	74HCTR643	
	Motorola	MC74HCT643	
	RCA	**CD74HCT643**	**1149**
	SGS	M74HCT643	
	Signetics	**74HCT643**	**1159**
	TI	SN74HCT643	
	Universal	US74HCT643	
	Zytrex	ZX74HCT643-2	
TC74HCT646	Hitachi	HD74HCT646	
	Nitron	NC74HCT646	
	RCA	**CD74HCT646**	**1149**
	SGS	M74HCT646	
	Signetics	**74HCT646**	**1159**
	TI	SN74HCT646	
	Universal	US74HCT646	
TC74HCT648	Hitachi	HD74HCT648	
	RCA	**CD74HCT648**	**1149**
	SGS	M74HCT648	
	Signetics	**74HCT648**	**1159**
	TI	SN74HCT648	
	Universal	US74HCT648	
TC74HCT651	Hitachi	HD74HCT651	
	Motorola	MC74HCT651	
	TI	SN74HCT651	
TC74HCT652	Hitachi	HD74HCT652	
	Motorola	MC74HCT652	
	TI	SN74HCT652	
◆TD3400	Fairchild	7400	
	National	DM7400	
	Signetics	**7400**	**1156**
	TI	SN7400	
	Toshiba	TC7400	
◆TD3401	Fairchild	7401	
	National	DM7401	
	TI	SN7401	
◆TD3402	Fairchild	7402	
	National	DM7402	
	Signetics	**7402**	**1156**
	TI	SN7402	
◆TD3403	Fairchild	7403	
	National	DM7403	
	Signetics	**7403**	**1156**
	TI	SN7403	
◆TD3404	Fairchild	7404	
	National	DM7404	
	Signetics	**7404**	**1156**
			(Continued)
◆TD3404	TI	SN7404	
	Toshiba	TC7404	
◆TD3405	Fairchild	7405	
	National	DM7405	
	Signetics	**7405**	**1156**
	TI	SN7405	
◆TD3406	Fairchild	7406	
	National	DM7406	
	Signetics	**7406**	**1156**
	TI	SN7406	
◆TD3407	Fairchild	7407	
	Hitachi	HD7407	
	National	DM7407	
	Signetics	**7407**	**1156**
	TI	SN7407	
◆TD3408	Fairchild	7408	
	National	DM7408	
	Signetics	**7408**	**1156**
	TI	SN7408	
◆TD3409	Fairchild	7409	
	National	DM7409	
	TI	SN7409	
◆TD3410	Fairchild	7410	
	National	DM7410	
	Signetics	**7410**	**1156**
	TI	SN7410	
	Toshiba	TC7410	
◆TD34107	Fairchild	74107	
	National	DM74107	
	Signetics	**74107**	**1156**
	TI	SN74107	
◆TD34121	Fairchild	74121	
	National	DM74121	
	Signetics	**74121**	**1157**
	TI	SN74121	
◆TD3416	Fairchild	7416	
	National	DM7416	
	Signetics	**7416**	**1156**
	TI	SN7416	
◆TD3417	Fairchild	7417	
	National	DM7417	
	Signetics	**7417**	**1156**
	TI	SN7417	
◆TD34192	Fairchild	74192	
	National	DM74192	
		DM8560	
	Raytheon	RC9360	
	Signetics	**74192**	**1157**
	TI	SN74192	
◆TD3420	Fairchild	7420	
		9004	
	National	DM7420	
		DM9004C	
	Signetics	**7420**	**1156**
	TI	SN7420	
	Toshiba	TC7420	
◆TD3421	National	DM7421	
◆TD3426	Fairchild	7426	
	National	DM7426	
		DM8810	
	Signetics	**7426**	**1156**
	TI	SN7426	
◆TD3430	Fairchild	7430	
	National	DM7430	
	Signetics	**7430**	**1156**
	TI	SN7430	
◆TD3437	Fairchild	7437	
	National	DM7437	
	Signetics	**7437**	**1156**
	TI	SN7437	
◆TD3438	Fairchild	7438	
	National	DM7438	
	Signetics	**7438**	**1156**
	TI	SN7438	
◆TD3440	Fairchild	7440	
	National	DM7440	
	Signetics	**7440**	**1156**
	TI	SN7440	
◆TD3441	Fairchild	74141	
		93141	
	Hitachi	HD7441	
	National	DM74141	
		DM7441	
	Signetics	74141	
		7441	
	TI	SN74141	
◆TD3442	Fairchild	7442	
	National	DM7442	
		DM8842	
	Signetics	**7442**	**1156**
	TI	SN7442A	
◆TD3450	Fairchild	7450	
	National	DM7450	
	Signetics	**7450**	**1156**
	TI	SN7450	
◆TD3451	Fairchild	7451	
	Hitachi	HD7451	
	National	DM7451	
	Signetics	**7451**	**1156**
	TI	SN7451	
◆TD3460	Fairchild	7460	
	National	DM7460	
	TI	SN7460	
◆TD3472	Fairchild	7472	
	National	DM7472	
	TI	SN7472	
◆TD3473	Fairchild	7473	
	National	DM7473	
	Signetics	**7473**	**1156**
	TI	SN7473	
◆TD3474	Fairchild	7474	
	National	DM7474	
	Signetics	**7474**	**1156**
	TI	SN7474	
◆TD3475	Fairchild	7475	
	National	DM7475	
	Signetics	**7475**	**1156**
	TI	SN7475	
◆TD3476	Fairchild	7476	
	National	DM7476	
	Signetics	**7476**	**1156**
	TI	SN7476	
◆TD3486	Fairchild	7486	
	National	DM7486	
	Signetics	**7486**	**1156**
	TI	SN7486	
◆TD3495	TI	SN7495A	
◆TD3503A	National	DM74184	
	TI	SN74184	
TD62001	Exar	XR2001	
		XR2001C	
		XR2201C	
	Mitsubishi	M54524	
	Motorola	**MC1411**	**3212**
		ULN2001	**3212**
	NEC	µPA2001	
	RIFA	PBD3523-11	
	Sanyo	LB1231	
	SGS	L201	
		ULN2001	
	SiliconG	SG2001	
	Sprague	**ULN-2001**	**3269**
		ULQ-2001	
	TI	ULN2001A	
	Toshiba	TD62101	
TD62002	Exar	XR2002C	
		XR2202C	
	Fairchild	MC1412	
	Mitsubishi	M54525	
	Motorola	**MC1412**	**3212**
		ULN2002	**3212**
	NEC	µPA2002	
	RIFA	PBD352304	
	Sanyo	LB1232	
	SGS	L202	
		ULN2002	
	Signetics	NE5602	
	SiliconG	SG2002	
	Sprague	ULN-2002	
	TI	ULN2002A	
TD62003	Exar	XR2003C	
		XR2203C	
	Fairchild	MC1413	
	Mitsubishi	M54523	
	Motorola	**MC1413**	**3212**
		ULN2003	**3212**
	NEC	µPA2003	
	RIFA	PBD352303	
	Sanyo	LB1233	
	SGS	L203	
		ULN2003	
	Signetics	NE5603	
		ULN2003	**3721**
	SiliconG	SG2003	
	Sprague	ULN-2003	
	Telefunken	TDA2003	
	TI	ULN2003A	
	Toshiba	TD62103	
TD62004	Exar	XR2204C	
	Mitsubishi	M54526	
	Motorola	**MC1416**	**3212**
		ULN2004	**3212**
	NEC	µPA2004	
			(Continued)

◆ Discontinued

The manufacturers report their devices can be used as direct replacements.
Performance details often differ, so compare the specifications considering your requirements.

Toshiba America (Cont'd)

Manufacturer Device	Replacement Source	Device	IC Master Page
TD62004	RIFA	PBD352302	
	Sanyo	LB1234	
	SGS	L204	
		ULN2004	
	Signetics	NE5604	
		ULN2004	3721
	SiliconG	SG2004	
	Sprague	ULN-2004	
		ULS-2004	
	TI	ULN2004A	
	Toshiba	TD62104	
TD62064	**IPS**	**IP2064**	3599
	Mitsubishi	M54532	
	Motorola	ULN2064	
	SGS	ULN2064	
	Sprague	ULN-2064	
	TI	SN75064	
		ULN2064	
TD62074	**IPS**	**IP2074**	3599
	Motorola	**ULN2074**	3212
	SGS	ULN2074	
	Sprague	ULN-2074	
	TI	SN75074	
		ULN2074	
TD62081	**Motorola**	**ULN2801**	3212
	RIFA	PBD353811	
	SGS	ULN2801	
	Sprague	ULN-2801	
TD62082	**Motorola**	**ULN2802**	3212
	RIFA	PBD353814	
	SGS	ULN2802	
	Sprague	ULN-2802	
TD62083	**Motorola**	**ULN2803**	3212
	RIFA	PBD353813	
	SGS	ULN2803	
	Sprague	ULN-2803	
TD62084	**Motorola**	**ULN2804**	3212
	RIFA	PBD353812	
	SGS	ULN2804	
	Sprague	ULN-2804	
TD62101	Exar	XR2001	
		XR2001C	
		XR2201C	
	Mitsubishi	M54524	
	Motorola	**MC1411**	3212
		ULN2001	3212
	NEC	μPA2001	
	RIFA	PBD3523-11	
	Sanyo	LB1231	
	SGS	L201	
		ULN2001	
	SiliconG	SG2001	
	Sprague	**ULN-2001**	3269
		ULQ-2001	
	TI	ULN2001A	
	Toshiba	TD62001	
TD62103	Exar	XR2003C	
		XR2203C	
	Fairchild	MC1413	
	Mitsubishi	M54523	
	Motorola	**MC1413**	3212
		ULN2003	3212
	NEC	μPA2003	
	RIFA	PBD352303	
	Sanyo	LB1233	
	SGS	L203	
		ULN2003	
	Signetics	NE5603	
		ULN2003	3721
	SiliconG	SG2003	
	Sprague	ULN-2003	
	Telefunken	TDA2003	
	TI	ULN2003A	
	Toshiba	TD62003	
TD62104	Exar	XR2204C	
	Mitsubishi	M54526	
	Motorola	**MC1416**	3212
		ULN2004	3212
	NEC	μPA2004	
	RIFA	PBD352302	
	Sanyo	LB1234	
	SGS	L204	
		ULN2004	
	Signetics	NE5604	
		ULN2004	3721
	SiliconG	SG2004	
	Sprague	ULN-2004	
		ULS-2004	
	TI	ULN2004A	
	Toshiba	TD62004	
TD62479	Motorola	MC1474	
	Sprague	UDN-5714	
	TI	SN75479	
		UDN5714	
TD62781	Dionics	DI513B	
		DI514B	
	Exar	**XR6118**	3554
	OKI	MSL912	
	Sanyo	LB1290	
	Signetics	**NE594**	3726
	Sprague	**UDN-6118**	3269
TD62782	**Exar**	**XR6128**	3554
	Sprague	**UDN-6128**	3269
TMM2015A	AMD	AM9128	
		AM9218	
	Cypress	CY7C128	
	Fujitsu	MB8128	
		MB8416	
	Harris	HM6116	
		HM6516	
	IDT	IDT6116	
	Intel	2128	
	MicroPwr	MP6116	
	Mitsubishi	M58275	
		M5M116	
		M5M5116	
		M5M5117	
		M5M5118	
		MS8725	
	Motorola	MCM2016	
		MCM2016H	
		MCM2128	
		MCM6116	4119
		MCM61L16	4119
		MCM65116	
	National	MMC2116	
	NEC	μPD4016	
	OKI	MSM2128	
		MSM5128	4732,4733
	RCA	MWS6116A	
	SSS	883C21C16	
		BCM21C16	
		SCM21C16	
		SCM6116	
	TI	TMS4016	
	ThomsonCSF	ET2128	
	Toshiba	**TC5516A**	4263
		TMM2016	
		TMM2016A	4263
	Samsung	KM6816	
	UMC	UM2128	
	Universal	US574HC133	
TMM2016	AMD	AM9128	
		AM9218	
	Cypress	CY7C128	
	Fujitsu	MB8128	
		MB8416	
	Harris	HM6116	
		HM6516	
	IDT	IDT6116	
	Intel	2128	
	MicroPwr	MP6116	
	Mitsubishi	M58275	
		M5M116	
		M5M5116	
		M5M5117	
		M5M5118	
		MS8725	
	Motorola	MCM2016	
		MCM2016H	
		MCM2128	
		MCM6116	4119
		MCM61L16	4119
		MCM65116	
	National	MMC2116	
	NEC	μPD4016	
	OKI	MSM2128	
		MSM5128	4732,4733
	RCA	MWS6116A	
	SSS	883C21C16	
		BCM21C16	
		SCM21C16	
		SCM6116	
	TI	TMS4016	
	ThomsonCSF	ET2128	
	Toshiba	**TC5516A**	4263
		TMM2015A	
		TMM2016A	4263
	Samsung	KM6816	
TMM2016	UMC	UM2128	
	Universal	US574HC133	
TMM2016A	AMD	AM9128	
		AM9218	
	Cypress	CY7C128	
	Fujitsu	MB8128	
		MB8416	
	Harris	HM6116	
		HM6516	
	IDT	IDT6116	
	Intel	2128	
	MicroPwr	MP6116	
	Mitsubishi	M58275	
		M5M116	
		M5M5116	
		M5M5117	
		M5M5118	
		MS8725	
	Motorola	MCM2016	
		MCM2016H	
		MCM2128	
		MCM6116	4119
		MCM61L16	4119
		MCM65116	
	National	MMC2116	
	NEC	μPD4016	
	OKI	MSM2128	
		MSM5128	4732,4733
	RCA	MWS6116A	
	SSS	883C21C16	
		BCM21C16	
		SCM21C16	
		SCM6116	
	TI	TMS4016	
	ThomsonCSF	ET2128	
	Toshiba	**TC5516A**	4263
		TMM2015A	
		TMM2016	
	Samsung	KM6816	
	UMC	UM2128	
	Universal	US574HC133	
TMM2018	Motorola	MCM2018	
	Toshiba	TMM2019	
TMM2019	Motorola	MCM2018	
	Toshiba	TMM2018	
TMM2063	AMD	AM9988	
		AM9988C	
	Cypress	CY7C186	
	Fujitsu	MB8464	
		MB8464A	
	Hitachi	HM6264	
		HM6464	
	IDT	IDT7188	
		IDT7M864	
	Mitsubishi	M5M5165	
	Motorola	MCM6164	
	NEC	μPD4364	
		μPD4464	
	OKI	MSM5164	
		MSM5165	
	RCA	CDM6264	
	S-MOS	SRM2064	
		SRM2264	4177,4178
	Sharp	LH5164	
	Toshiba	TC5564	
		TC5565	
		TMM2064	
	Samsung	KM6264	
TMM2064	AMD	AM9988	
		AM9988C	
	Cypress	CY7C186	
	Fujitsu	MB8464	
		MB8464A	
	Hitachi	HM6264	
		HM6464	
	IDT	IDT7188	
		IDT7M864	
	Mitsubishi	M5M5165	
	Motorola	MCM6164	
	NEC	μPD4364	
		μPD4464	
	OKI	MSM5164	
		MSM5165	
	RCA	CDM6264	
	S-MOS	SRM2064	
		SRM2264	4177,4178
	Sharp	LH5164	
	Toshiba	TC5564	
		TC5565	
TMM2064	Toshiba	TMM2063	
	Samsung	KM6264	
TMM2068	Cypress	CY7C168	
		CY7C169	
	Fujitsu	MB81C68A	
	Motorola	MCM6169	
	Toshiba	TMM2069	
TMM2069	Cypress	CY7C168	
		CY7C169	
	Fujitsu	MB81C68A	
	Motorola	MCM6169	
	Toshiba	TMM2068	
TMM23128	AMD	AM92128	
	GI	R09128	
		SPR-128	
	GouldAMI	S23128	
		S3630A	
	GTEMicro	G53128	
	Hitachi	HN613128	
		HN613128P	
	Mitsubishi	M5M23128	
	Motorola	MCM63128	
	NCR	NCR23128	
	NEC	UPD23128	
		UPD23128A	
		UPD23128E	
		UPD23C128	
		UPD23C128E	
	RCA	**CDM53128**	1673,1677
	Rockwell	R23128	
	Signetics	23128	
	SSS	SCM23C128	
	Supertex	CM1310	
	Synertek	SY23128	
	UMC	UM23128	
	VTI	23131	
		VT23128	
		VT23129	
		VT23129A	
		VT23130	
		VT23138	
TMM23256	AMD	AM92256	
	Fujitsu	MB83256	
	GI	R09256	
	GouldAMI	S23256	
		S38256	
	GTEMicro	G53256	
	Hitachi	HN613256	
	Mitsubishi	M5M23256	
	Mostek	MK38000	
	Motorola	MCM63256	
		MCM65256	
	NCR	NCR23256	
		NCR23257	
	NEC	UPD23256	
		UPD23256A	
		UPD23C256E	
	OKI	**MSM38256**	4733
	Panasonic	MN23256	
		MN23257	
	RCA	CDM52356	
		CDM53256	1673,1678
	S-MOS	**SMM2326**	4178
		SMM6325	4178
		SMM6326	4178
	Signetics	23256	
		23256A	
	SSS	SCM23C256	
	Supertex	CM2560	
	UMC	UM23256	
	VTI	23257	
		VT23256	
		VT23257	
TMM2332	AMD	AM9232	
	CSG	MPS2332	
	Fairchild	F3532	
	GI	R03-9332	
	GouldAMI	S2333	
		S68A332	
	GTEMicro	G2332	
	Hitachi	HN46332	
	Intech	IM7332	
	Intel	2332	
	Mitsubishi	M58333	
	Motorola	**MCM68A332**	4120
	National	NM52132	
	NCR	NCR2332	
	NEC	UPD2332A	
	Panasonic	MN2332	

(Continued)

◆ Discontinued

Bold face device numbers indicate manufacturers data is provided in the IC Master on the pages noted.

Toshiba America (Cont'd)

Manufacturer Device	Replacement Source	Device	IC Master Page
TMM2332	**RCA**	**CDM5333**	**1673,1677**
	Rockwell	R2332	
	SGS	M2332	
	Sharp	LH2332	
	Siemens	SA88332	
		SAB8332	
	Signetics	2332	
		2632A	
	SiliconG	SG3532	
	SSS	SCM23C32	
	SMC	ROM4732	
	Supertex	23SC32	
		CM3200	
	Synertek	SY2332	
	TI	TM2332	
		TMS2332	
		TMS4732	
	Toshiba	TMM333P	
	VTI	VT2332	
TMM2364	AMD	AM9264	
	GouldAMI	S2364	
		S68A364	
	Hitachi	HN48364	
	Motorola	**MCM68364**	**4120**
	NCR	NCR2364	
	OKI	**MSM3864**	**4733**
	Plessey	SL2364C	
	S-MOS	**SMM2364**	**4178**
	Sharp	LH2364A	
	Signetics	2364	
	Synertek	SYM2364	
	TI	TMS2364	
		TMS4764	
	VTI	VT2364	
	Weitek	SC8164	
TMM2365	AMD	AM9265	
	Fairchild	F3568	
		F3569	
		F3570	
	GI	R03-9365	
		R09864	
	GouldAMI	S2364	
		S6364	
	GTEMicro	G5364	
	Hitachi	HN61364	
	Intel	2364A	
	Mitsubishi	M5M2364	
		M5M2365	
		M5M23C64	
	Mostek	MK37000	
	Motorola	MCM68369	
		MCM68370	
	National	MM52264	
		NM52264	
	OKI	**MSM3864**	**4733**
	Panasonic	MN2364	
		MN4864	
	RCA	**CDM5365**	**1673,1677**
	Rockwell	R2364B	
	SSS	SCM23C65	
	Supertex	23SC64	
		23SC64/A	
		CM6400	
	Synertek	SY2365/A	
	TI	TMS2364	
		TMS4764	
	UMC	UM2366	
	VTI	VT2365	
TMM2366	AMD	9264	
	GI	R03-9364	
	GouldAMI	S68A364	
	Hitachi	HN48364	
	Intech	IM7364	
	MicroPwr	MP2364C	
	Mitsubishi	M58334	
	Mostek	MK36000	
	Motorola	**MCM68364**	**4120**
		MCM68365	**4120**
		MCM68366	**4120**
	National	MM52164	
	NEC	UPD2364	
	Rockwell	R2364A	
	SGS	M2362	
		M36000	
	Signetics	2664	
		26S64	
	SSS	SCM23C64	
	SMC	ROM36000	
TMM2366	Synertek	SY2364/A	
	TI	TMS4764	
TMM27128	AMD	AM27128	
	Fujitsu	MBM27128	
	Hitachi	HM4827128	
	Intel	27128	
		27128A	**4074**
	Mitsubishi	M5L27128	
		M5L27C128	
	NEC	μPD27128	
	SEEQ	27128	
	SGS	M27128	
	TI	**TMS27C128**	**4210**
TMM27256	AMD	AM27256	
	Fujitsu	MBM27256	
		MBM27C256	
	GI	R09256	
	Hitachi	HM4827256	
		HN27256	
		HN27C256	**4037**
	Intel	27256	
		27C256	**4079**
	Mitsubishi	M5L27256	
		MSL27256	
	Motorola	MCM67256	
	National	NMC27C256	
	NEC	MPD27256	
		UPD27256	
		UPD27C256	
		UPD27C256A	
	SEEQ	27256	
		27C256	
	SGS	M27256	
	SSS	SCM27C128	
	Toshiba	TC57256	
		TMM27C256	
	VTI	**VT27C256**	**4265,4273**
◆TMM2732	AMD	AM2732	
	Hitachi	HN462732	
	Intel	2732	
		2732A	
		M2732	
	National	MM2732	
		NMC2732	
	Rockwell	R27C32	
	SGS	M2732A	
	Toshiba	TMM324C	
TMM27512	AMD	AM27512	
	Fujitsu	MBM27512	
		MBM27C512	
	Hitachi	HN27512	
	Intel	**27512**	**4076**
	Mitsubishi	M5L27512	
	NEC	MPD27C512	
TMM2764	AMD	AM2764	
	Fujitsu	MBM2764	
		MBM27C64	
	Hitachi	HM482764	
		HN2764	
		HN27C64	
		HN482764	
	Intel	2764	
		2764A	
		27C64	**4078**
		87C64	**4078**
	Mitsubishi	M5L2764	
	NEC	UPD2764	
		UPD27C64	
	OKI	MSM2764	
		MSM2764A	**4732**
		MSM27C64	
	Rockwell	R2764	
		R27C64	
		R87C64	
	S-MOS	SPM27C64	
	SEEQ	2764	
		5133	
	SGS	M2764	
	Signetics	27C64	
	SSS	SCM27C64	
	TI	TMS27C64	
	ThomsonCSF	ET2764	
TMM27C256	AMD	AM27256	
	Fujitsu	MBM27256	
		MBM27C256	
	GI	R09256	
	Hitachi	HM4827256	
		HN27256	
		HN27C256	**4037**
	Intel	27256	
		27C256	**4079**
TMM27C256	Mitsubishi	M5L27256	
		MSL27256	
	Motorola	MCM67256	
	National	NMC27C256	
	NEC	MPD27256	
		UPD27256	
		UPD27C256	
		UPD27C256A	
	SEEQ	27256	
		27C256	
	SGS	M27256	
	SSS	SCM27C128	
	Toshiba	TC57256	
		TMM27256	
	VTI	**VT27C256**	**4265,4273**
TMM314A	AMD	AM9114	
	Fairchild	F2114	
	Hitachi	HM472114	
	Intel	2114	
		2114A	
	Mitsubishi	M5L2114	
	Motorola	M5L2114	
		MCM2114	
		MCM21L14	
	National	NMC2114A	
	OKI	MSM2114	
	SSS	SCM2114A	
		SCM21C14	
	Synertek	SY2114	
	Toshiba	TMM2114A	
	UMC	UM2114	
TMM3150	Cypress	CY2147	
		CY7C147	
	Hitachi	HM6147	
	Intel	2141	
		2147	
		2147-3	
	Motorola	MCM6147	
		MCM61L47	
	National	MM2147	
		NMC2141	
	NEC	MPD2147	
	OKI	MSM5104	
	TI	TMS2147	
	UMC	UM2147	
TMM324C	AMD	AM2732	
	Hitachi	HN462732	
	Intel	2732	
		2732A	
		M2732	
	National	MM2732	
		NMC2732	
	Rockwell	R27C32	
	SGS	M2732A	
TMM333P	AMD	AM9232	
	CSG	MPS2332	
	Fairchild	F3532	
	GI	R03-9332	
	GouldAMI	S2333	
		S68A332	
	GTEMicro	G2332	
	Hitachi	HN46332	
	Intech	IM7332	
	Intel	2332	
	Mitsubishi	M58333	
	Motorola	**MCM68A332**	**4120**
	National	NM52132	
	NCR	NCR2332	
	NEC	UPD2332A	
	Panasonic	MN2332	
	RCA	**CDM5333**	**1673,1677**
	Rockwell	R2332	
	SGS	M2332	
	Sharp	LH2332	
	Siemens	SA88332	
		SAB8332	
	Signetics	2332	
		2632A	
	SiliconG	SG3532	
	SSS	SCM23C32	
	SMC	ROM4732	
	Supertex	23SC32	
		CM3200	
	Synertek	SY2332	
	TI	TM2332	
		TMS2332	
		TMS4732	
	Toshiba	TMM2332	
	VTI	VT2332	
TMM41256	AMD	MCM6256	
	AT&T	WCM41256	
	Fujitsu	MB81256	
	Hitachi	HM50256	
		HM50257	
	MicronTech	MT1256	
	Mitsubishi	M5M4256	
		MSM4257	
	Motorola	MCM6256	
		MCM6257	
	NEC	MPD41257	
		μPD41256	
	OKI	M5M37256	
		MSM37256	
		MSM41256	
	Panasonic	MM41256	
	TI	TMS4257	
	Samsung	KM1256	
TMM41257	Fujitsu	MB81257	
	Hitachi	HM50257	
	Mitsubishi	MSM4257	
	NEC	UPD41257	
	TI	TMS4257	
TMM41464	Fujitsu	MB81464	
	Hitachi	HM50464	
	Mitsubishi	MSM4464P	
	NEC	UPD41464C	
TMM416	Hitachi	HM4716A	
	OKI	MSM3716	
	ThomsonCSF	ET4116	
TMM4164	Fairchild	F64K	
	Fujitsu	MB8264A	
		MB8266A	
	Hitachi	HM4864	
	Inmos	IMS2600	
	MicronTech	MT4264	
	Motorola	MCM4164B	
		MCM6665B	
	National	NMC4164	
	NEC	μPD4164	
	OKI	MSM3764	
	ThomsonCSF	ET4164	
	Samsung	KM4164	
TMM41832	Hitachi	HM65256	
	NEC	μPD42832	
TMM5565	IDT	IDT8M864	
	Samsung	KM6266	
TMP8035	AMD	8035	
	Intel	8035	
	National	INS8035	
	NEC	μPD8035	
	Signetics	SCN8035	
TMP8039	Intel	8039	
TMP8048	AMD	8048	
	Intel	8048	
	National	INS8048	
	NEC	μPD8048	
	Signetics	SCN8048	
TMP8049	Intel	8049	
	National	INS8049	
	NEC	μPD8049	
	Signetics	SCN8049	
TMP8085A	AMD	8085	
		8085A	
	Intel	8085	
		8085A	
	NEC	μPD8085	
TMP80C35	Intel	80C35	
TMP80C39	Intel	80C39	
	Mitsubishi	M5M80C39	
	Signetics	**SCC80C39**	**1710**
TMP80C48	Intel	80C48	
	NEC	μPD80C48	
TMP80C49	Intel	80C49	
	NEC	μPD80C49	
	Signetics	**SCC80C49**	**1710**
TMP80C50	Intel	80C50	
	NEC	μPD80C50	
TMP8155	AMD	8155	
	Harris	HS81C55	
	Intel	8155	
	NEC	μPD8155	
TMP8243	Intel	8243	
	NEC	UPD8243	
TMP8251	AMD	8251	
	Intel	P8251	
	NEC	UPD8251A/AF	
	OKI	**MSM82C51A**	**4732**
	S-MOS	SMC82C51AC	
TMP8253	AMD	8253	
	Intel	8253	

(Continued)

◆ Discontinued

The manufacturers report their devices can be used as direct replacements.
Performance details often differ, so compare the specifications considering your requirements.

Toshiba America (Cont'd)

Manufacturer Device	Replacement Source	Device	IC Master Page
TMP8253	National	INS8253	
	NEC	UPD8253-2/-5	
TMP8255	Harris	82C55	
		CP82C55A	
	Intel	8255	
		82C55	
		P8255	
	NEC	UPD71055	
		UPD8255A	
	OKI	82C55	
		MSM82C55A	**4732**
	S-MOS	SMC82C55AC	
	Toshiba	**TMP82C55**	**1750**
TMP8259	AMD	D8259	
	Fujitsu	MBL8259	
	Harris	**82C59A**	**682,1619,1621,1631,4029,4654**
		CP82C59A	
	Intel	8259	
		82C59A	
	National	INS8259	
	NEC	UPD8259A/A-2	
	Nitron	NC82C59A	
	OKI	**MSM82C59A**	**4732**
	S-MOS	SMC82C59AC	
TMP8355	Intel	8355	
◆TMP8755	Intel	8755A	
	NEC	μPD8755A	
TMPZ84C00	SGS	Z8400	
		Z84C00	
	Sharp	LH-0080	
	Zilog	Z8400	
		Z84C00	**1773**
TMPZ84C10	SGS	Z84C10	
	Zilog	Z8410	
		Z84C10	
TMPZ84C20	SGS	Z84C20	
	Zilog	**Z84C20**	**1773**
TMPZ84C30	SGS	Z84C30	
	Zilog	**Z84C30**	**1773**
TMPZ84C40	SGS	Z284C40	
	Zilog	Z8440	
		Z84C40	**1774**
TMPZ84C41	SGS	Z84C41	
	Zilog	**Z84C41**	**1774**
TMPZ84C42	SGS	Z84C42	
	Zilog	**Z84C42**	**1774**

TRW LSI Products

Manufacturer Device	Replacement Source	Device	IC Master Page
MPY008H	AMD	AM25S557	
	AD	ADSP1080	
	LogicDev	LMU08	
MPY0121H	AD	ADSP1012	
	IDT	**IDT7212**	**1087,1088**
	IMI	MPY12IMI	
	LogicDev	LMU12	
	TRW-LSI	MPY012H	
MPY012H	AD	ADSP1012	
	IDT	**IDT7212**	**1087,1088**
	IMI	MPY12IMI	
	LogicDev	LMU12	
	TRW-LSI	MPY0121H	
MPY016	AMD	AM29516	
		AM29C516	
	AD	ADSP1016	
	IDT	**IDT7216**	**1086,1088**
	LogicDev	LMU16	
	TRW-LSI	MPY016K	
	Weitek	WTL1016	
		WTL1516	
		WTL2516	
MPY016H	AMD	AM29516	
		AM29C516	
	AD	ADSP1016	
	Cypress	CY7C516	
	IDT	**IDT7216**	**1086,1088**
	LogicDev	LMU16	
	TRW-LSI	MPY016K	
		MPY16HJ	
	Weitek	WTL1016	
		WTL1516	
		WTL2516	
MPY016K	AMD	AM29516	
		AM29C516	
	AD	ADSP1016	
	Cypress	CY7C516	
	IDT	**IDT7216**	**1086,1088**
	LogicDev	LMU16	
	TRW-LSI	MPY016H	
MPY016K	TRW-LSI	MPY16HJ	
	Weitek	WTL1016	
		WTL1516	
		WTL2516	
MPY08HU	AMD	AM25S557	
	AD	ADSP1080	
	LogicDev	LMU08	
	TRW-LSI	MPY8UHJ	
MPY112K	AD	ADS1012	
	LogicDev	LMU08	
MPY16HJ	AMD	AM29516	
		AM29C516	
	AD	ADSP1016	
	Cypress	CY7C516	
	IDT	**IDT7216**	**1086,1088**
	LogicDev	LMU16	
	TRW-LSI	MPY016H	
		MPY016K	
	Weitek	WTL1016	
		WTL1516	
		WTL2516	
MPY8UHJ	AMD	AM25S557	
	AD	ADSP1080	
	LogicDev	LMU08	
	TRW-LSI	MPY08HU	
TDC1008	AD	ADSP1008	
TDC1009	AD	ADSP1009	
	LogicDev	LMA1009	
	TRW-LSI	TDC2009	
		TMC2009	
TDC1010	AMD	AM29510	
		AMD29510	
		AMD29L510	
	AD	ADSP1010	
		ADSP1010A	
	Cypress	CY7C510	
	IDT	**IDT7210**	**1084,1088**
	LogicDev	LMA1010	
	MicroPwr	**MP1010**	**688**
	TI	74HCT9510	
		SN74HCT9510	
	TRW-LSI	TDC2010	
		TMC2010	
		TMC2110	
	Weitek	WTL1010	
		WTL2010	
		WTL2044	
		WTL2245	
TDC1023	LogicDev	L10C23	
TDC2009	AD	ADSP1009	
	LogicDev	LMA1009	
	TRW-LSI	TDC1009	
		TMC2009	
TDC2010	AMD	AM29510	
		AMD29510	
		AMD29L510	
	AD	ADSP1010	
		ADSP1010A	
	Cypress	CY7C510	
	IDT	**IDT7210**	**1084,1088**
	LogicDev	LMA1010	
	MicroPwr	**MP1010**	**688**
	TI	74HCT9510	
		SN74HCT9510	
	TRW-LSI	TDC1010	
		TMC2010	
		TMC2110	
	Weitek	WTL1010	
		WTL2010	
		WTL2044	
		WTL2245	
TMC2009	AD	ADSP1009	
	LogicDev	LMA1009	
	TRW-LSI	TDC1009	
		TDC2009	
TMC2010	AMD	AM29510	
		AMD29510	
		AMD29L510	
	AD	ADSP1010	
		ADSP1010A	
	Cypress	CY7C510	
	IDT	**IDT7210**	**1084,1088**
	LogicDev	LMA1010	
	MicroPwr	**MP1010**	**688**
	TI	74HCT9510	
		SN74HCT9510	
	TRW-LSI	TDC1010	
		TDC2010	
		TMC2110	
	Weitek	WTL1010	
		WTL2010	
TMC2010	Weitek	WTL2044	
		WTL2245	
TMC2110	AMD	AM29510	
		AMD29510	
		AMD29L510	
	AD	ADSP1010	
		ADSP1010A	
	Cypress	CY7C510	
	IDT	**IDT7210**	**1084,1088**
	LogicDev	LMA1010	
	MicroPwr	**MP1010**	**688**
	TI	74HCT9510	
		SN74HCT9510	
	TRW-LSI	TDC1010	
		TDC2010	
		TMC2010	
	Weitek	WTL1010	
		WTL2010	
		WTL2044	
		WTL2245	

(Continued)

(Continued)

United Microelectronics Corp.

Manufacturer Device	Replacement Source	Device	IC Master Page
UM2114	AMD	AM9114	
	Fairchild	F2114	
	Hitachi	HM472114	
	Intel	2114	
		2114A	
	Mitsubishi	M5L2114	
	Motorola	M5L2114	
		MCM2114	
		MCM21L14	
	National	NMC2114A	
	OKI	MSM2114	
	SSS	SCM2114A	
		SCM21C14	
	Synertek	SY2114	
	Toshiba	TMM2114A	
		TMM314A	
UM2128	AMD	AM9128	
		AM9218	
	Cypress	CY7C128	
	Fujitsu	MB8128	
		MB8416	
	Harris	HM6116	
		HM6516	
	IDT	IDT6116	
	Intel	2128	
	MicroPwr	MP6116	
	Mitsubishi	M58725	
		M5M116	
		M5M5116	
		M5M5117	
		M5M5118	
		MS8725	
	Motorola	MCM2016	
		MCM2016H	
		MCM2128	
		MCM6116	**4119**
		MCM61L16	**4119**
		MCM65116	
	National	MMC2116	
	NEC	μPD4016	
	OKI	MSM2128	
		MSM5128	**4732,4733**
	RCA	MWS6116A	
	SSS	883C21C16	
		BCM21C16	
		SCM21C16	
		SCM6116	
	TI	TMS4016	
	ThomsonCSF	ET2128	
	Toshiba	**TC5516A**	**4263**
		TMM2015A	
		TMM2016	
		TMM2016A	**4263**
	Samsung	KM6816	
	Universal	US574HC133	
UM2147	Cypress	CY2147	
		CY7C147	
	Hitachi	HM6147	
	Intel	2141	
		2147	
		2147-3	
	Motorola	MCM6147	
		MCM61L47	
	National	MM2147	
		NMC2141	
	NEC	MPD2147	
	OKI	MSM5104	
UM2147	TI	TMS2147	
	Toshiba	TMM3150	
UM2148	AMD	AM2148	
		AM2149	
	Cypress	CY2148	
		CY2149	
		CY7C148	
		CY7C149	
	Intel	2148H	
		2149H	
	National	NMC2148	
	NEC	UPD2149	
	ThomsonCSF	ET2148	
	UMC	UM2149	
UM2149	AMD	AM2148	
		AM2149	
	Cypress	CY2148	
		CY2149	
		CY7C148	
		CY7C149	
	Intel	2148H	
		2149H	
	National	NMC2148	
	NEC	UPD2149	
	ThomsonCSF	ET2148	
	UMC	UM2148	
UM2158	Mostek	MK4118	
UM2167	Fujitsu	MB8418	
	Hitachi	HM6117	
	NEC	μPD449	
	RCA	CDM6118	
	S-MOS	SRM2018	
	Toshiba	TC5518B	
UM2168	Fujitsu	MB8168	
	Intel	2168	
	TI	TMS2168	
UM23128	AMD	AM92128	
	GI	R09128	
		SPR-128	
	GouldAMI	S23128	
		S3630A	
	GTEMicro	G53128	
	Hitachi	HN613128	
		HN613128P	
	Mitsubishi	M5M23128	
	Motorola	MCM63128	
	NCR	NCR23128	
	NEC	UPD23128	
		UPD23128A	
		UPD23128E	
		UPD23C128	
		UPD23C128E	
	RCA	**CDM53128**	**1673,1677**
	Rockwell	R23128	
	Signetics	23128	
	SSS	SCM23C128	
	Supertex	CM1310	
	Synertek	SY23128	
	Toshiba	TMM23128	
	VTI	23131	
		VT23128	
		VT23129	
		VT23129A	
		VT23130	
		VT23138	
UM23256	AMD	AM92256	
	Fujitsu	MB83256	
	GI	R09256	
	GouldAMI	S23256	
		S38256	
	GTEMicro	G53256	
	Hitachi	HN613256	
	Mitsubishi	M5M23256	
	Mostek	MK38000	
	Motorola	MCM63256	
		MCM65256	
	NCR	NCR23256	
		NCR23257	
	NEC	UPD23256	
		UPD23256A	
		UPD23C256E	
	OKI	**MSM38256**	**4733**
	Panasonic	MN23256	
		MN23257	
	RCA	CDM52356	
		CDM53256	**1673,1678**
	S-MOS	**SMM2326**	**4178**
		SMM6325	**4178**
		SMM6326	**4178**
	Signetics	23256	

(Continued)

(Continued)

◆ Discontinued

Bold face device numbers indicate manufacturers data is provided in the IC Master on the pages noted.

United Microelectronics Corp. (Cont'd)

Manufacturer Device	Replacement Source	Device	IC Master Page
UM23256	Signetics	23256A	
	SSS	SCM23C256	
	Supertex	CM2560	
	Toshiba	**TMM23256**	**4263**
	VTI	23257	
		VT23256	
		VT23257	
UM2366	AMD	AM9265	
	Fairchild	F3568	
		F3569	
		F3570	
	GI	R03-9365	
		R09864	
	GouldAMI	S2364	
		S6364	
	GTEMicro	G5364	
	Hitachi	HN61364	
	Intel	2364A	
	Mitsubishi	M5M2364	
		M5M2365	
		M5M23C64	
	Mostek	MK37000	
	Motorola	MCM68369	
		MCM68370	
	National	MM52264	
		NM52264	
	OKI	**MSM3864**	**4733**
	Panasonic	MN2364	
		MN4864	
	RCA	**CDM5365**	**1673,1677**
	Rockwell	R2364B	
	SSS	SCM23C65	
	Supertex	23SC64	
		23SC64/A	
		CM6400	
	Synertek	SY2365/A	
	TI	TMS2364	
		TMS4764	
	Toshiba	TMM2365	
	VTI	VT2365	

Unitrode

Manufacturer Device	Replacement Source	Device	IC Master Page
L295	SGS	L295	
L296	SGS	L296	
L298	SGS	L298	
PIC600	SiliconG	SM600	
PIC601	SiliconG	SM601	
PIC602	SiliconG	SM602	
PIC610	SiliconG	SM610	
PIC611	SiliconG	SM611	
PIC612	SiliconG	SM612	
PIC625	SiliconG	SM625	
PIC626	SiliconG	SM626	
PIC627	SiliconG	SM627	
PIC637	SiliconG	SM637	
PIC645	SiliconG	SM645	
PIC646	SiliconG	SM646	
PIC647	SiliconG	SM647	
PIC655	SiliconG	SM655	
PIC656	IMI	MPY012	
	SiliconG	SM656	
PIC657	SiliconG	SM657	
UC117	Fairchild	µA117	
	IPS	**IP117**	**3599**
	LinearTech	LM117	
	MCE	MCE-LM117	
	Motorola	**LM117**	**3625**
	SiliconG	SG117	
	TI	LM117	
	ThomsonCSF	LM117	
		TDC0117	
UC137	**IPS**	**IP137**	**3599**
	LinearTech	LM137	
	MCE	MCE-LM137	
	Motorola	**LM137**	**3625**
	National	LM137	
	ThomsonCSF	LM137	
		TDC0137	
UC150	**IPS**	**IP150**	**3599**
	LinearTech	LM150	
	Motorola	**LM150**	**3625**
	National	LM150	
	SiliconG	SG150	
UC1524A	Cherry	CS1524	
	Exar	**XR1524**	**3558**
	IPS	**IP1524**	**3599**
	LinearTech	LT1524	
UC1524A	National	LM1524	
	RCA	CA1524	
	SGS	SG1524	
		UC1524A	
	SiliconG	SG1524	
	Sprague	ULS-8124	
	TI	**SG1524**	**720**
UC1525	Sprague	ULS-8125	
UC1525A	Cherry	CS1525A	
	Exar	**XR1525A**	**3559**
	IPS	**IP1525A**	**3599**
	LinearTech	LT1525A	
	Motorola	**SG1525A**	**3626**
	SGS	SG1524A	
	SiliconG	SG1525A	
	Siliconix	PWM125	
	Sprague	ULS-8125	
	TI	SG1525A	
UC1526	**IPS**	**IP1526**	**3599**
	Motorola	**SG1526**	**3626**
		SG3526	**3626**
	SiliconG	SG1526	
	Sprague	ULN8126	
		ULQ8126	
		ULS8126	
UC1527A	Cherry	CS1527A	
	IPS	IP1527A	
	LinearTech	LT1527A	
	Motorola	**SG1527A**	**3626**
	SGS	SG1527A	
	SiliconG	SG1527A	
	Siliconix	PWM27	
	Sprague	ULS-8125	
	TI	SG1527A	
UC1532	SiliconG	SG1532	
	Unitrode	**UC1544**	**3740**
UC1544	SiliconG	SG1532	
	Unitrode	UC1532	
UC1840	SGS	UC1840	
	SiliconG	SG1840	
UC1842	**IPS**	**IP1842**	**3599**
UC1843	**IPS**	**IP1843**	**3599**
UC217	**IPS**	**IP217**	**3599**
	MCE	MCE-LM217	
	Motorola	**LM217**	**3625**
	National	LM217	
	SiliconG	SG217	
	TI	LM217	
	ThomsonCSF	TDE0117	
UC237	**IPS**	**IP237**	**3599**
	MCE	MCE-LM237	
	Motorola	**LM237**	**3625**
	National	LM237	
	TI	LM237	
UC250	**IPS**	**IP250**	**3599**
	Motorola	**LM250**	**3625**
	National	LM250	
	SiliconG	SG250	
UC2524	Sprague	ULQ-8124	
UC2524A	Cherry	CS2524	
	Exar	XR2524	
	IPS	**IP2524**	**3599**
	RCA	CA2524	
	SGS	SG2524	
		UC2524A	
	SiliconG	SG2524	
	Sprague	ULQ-8124	
	TI	SG2524	
UC2525A	Cherry	CS2525A	
	Exar	XR2525A	
	IPS	**IP2525A**	**3599**
	LinearTech	LT2525A	
	Motorola	**SG2525A**	**3626**
	SiliconG	SG2525A	
	Siliconix	PWM25B	
	Sprague	ULQ-8125	
	TI	SG2525A	
UC2526	**IPS**	**IP2526**	**3599**
	Motorola	**SG2526**	**3626**
	SiliconG	SG2526	
	Sprague	ULQ-8126	
UC2527A	Cherry	CS2527A	
	Exar	XR2527A	
	IPS	IP2527A	
	LinearTech	LT2527A	
	Motorola	**SG2527A**	**3626**
	SiliconG	SG2527A	
	TI	SG2527A	
UC2840	SGS	UC2840	
	SiliconG	SG2840	
UC2842	Cherry	CS2842A	
		CS3842A	
UC2843	**IPS**	**IP2843**	**3599**
UC317	Fairchild	µA317	
	IPS	**IP317**	**3599**
	LinearTech	LM317	
	MCE	MCE-LM317	
	Motorola	**LM317**	**3625**
	National	LM317	
	SGS	LM317	
	SiliconG	SG317	
	TI	LM317	
	ThomsonCSF	LM317	
		TDB0117	
UC337	**IPS**	**IP337**	**3599**
	LinearTech	LM337	
	MCE	MCE-LM337	
	Motorola	**LM337**	**3625**
	National	LM337	
	SiliconG	SG337	
	TI	LM337	
	ThomsonCSF	TDB0137	
UC350	**IPS**	**IP350**	**3599**
UC3524A	Cherry	CS3524	
	Exar	**XR3524**	**3558**
	IPS	**IP3524**	**3599**
		IP3524B	**3599**
	National	LM3524	
	RCA	CA3524	
	SGS	SG3524	
		UC3524A	
	Signetics	**SG3524**	**3715,3720,3730**
	SiliconG	SG3524B	
	Sprague	ULN-8124	
	TI	SG3524	
UC3525A	Exar	XR3525A	
	IPS	**IP3525A**	**3599**
	LinearTech	LT3525A	
	Motorola	**SG3525A**	**3626**
	SGS	SG3525A	
	SiliconG	SG3525A	
	Siliconix	PWM25	
	TI	SG3525A	
UC3526	**IPS**	**IP3526**	**3599**
	SiliconG	SG3526	
	Sprague	ULN-8126	
UC3527	Sprague	ULN-8127	
UC3527A	SiliconG	SG3527A	
	Sprague	ULN-8127	
	TI	SG3527	
UC3717	RIFA	PBL3717	
UC3840	SGS	UC3840	
UC3842	SGS	UC3842	
UC3843	**IPS**	**IP3843**	**3599**
UC3846	SGS	UC3846	
UC3847	SGS	UC3847	
UC493A	Motorola	TL493	
UC494A	Cherry	CS494M	
	Exar	**XR494**	**3557**
	Fairchild	µA494	
	IPS	**IP494A**	**3599**
	Motorola	TL494	
	Sprague	ULN8194A	
		ULS-8194	
	TI	**TL494M**	**720**
		TL594M	**720**
UC494AC	IPS	IP494C	
	TI	TL494C	
		TL594C	
UC495A	Sprague	ULS-8195	
	TI	TLS9SM	
UC495AC	TI	TL495C	
UC526	**IPS**	**IP1526**	**3599**
	SiliconG	SG1526	
	Sprague	ULS-8126	
UC7805	**IPS**	**IP7805**	**3599**
	National	LM340-5	
	SiliconG	SG7805	
	Samsung	MC7805	
UC7812	Fairchild	µA7812	
	IPS	**IP140-12**	**3599**
		IP340-12	**3599**
		IP7812	**3599**
	Lambda	LMC7812	
		LµA7812	
	Motorola	**MC7812**	**3623**
	National	LM7812	
	NEC	µPC7812	
	SGS	L7812	
	SiliconG	SG340-12	
		SG7812	
	TI	µA7812	
UC7812	Toshiba	TA78012	
	Samsung	MC7812	
UC7815	Fairchild	µA7815	
		µA78L15	
	IPS	**IP140-15**	**3599**
		IP340-15	**3599**
		IP7815	**3599**
	Lambda	LAS1515	
		LMC7815	
		LµA7815	
	Motorola	**MC7815**	**3624**
		MC78L15	
	National	LM340-15	
		LM340LA-15	
		LM340T-15	
		LM7815	
		LM78L15	
	NEC	µPC7815	
		µPC78L15	
	SGS	L7815	
	SiliconG	SG340-15	
		SG7815	
	TI	LM340-15	
		µA7815	
		µA78L15	
	ThomsonCSF	µA7815	
	Toshiba	TA78015	
	Samsung	MC7815	
UC7905	Fairchild	µA7905	
		µA79M05	
	IPS	**IP120-5**	**3599**
		IP320-5	**3599**
		IP7905	**3599**
	Lambda	LµA7905	
	National	LM320MP5	
		LM7905	
		LM79M05	
	NEC	µPC7905	
	SiliconG	SG120-5	
		SG320-05	
		SG320P-5	
	TI	µA7905	
UC7912	Fairchild	µA7912	
		µA79M12	
	IPS	**IP320-12**	**3599**
		IP7912	**3599**
	Motorola	MC7912	
	National	LM320MP12	
		LM7912	
		LM79M12	
	NEC	µPC7912	
	SGS	L7912	
	SiliconG	SG320P-12	
		SG7912	
	TI	LM320-12	
		µA7912	
	ThomsonCSF	µA7912	
	Samsung	MC7912	
UC7915	Fairchild	µA7915	
	IPS	**IP320-15**	**3599**
		IP7915	**3599**
	Motorola	MC7915	
	National	LM320-15	
		LM320T15	
		LM7915	
	NEC	µPC7915	
	SGS	L7915	
	SiliconG	SG320-15	
		SG7915	
	TI	LM320-5	
		µA7915	
	ThomsonCSF	µA7915	
	Samsung	MC7915	

Universal Semiconductor, Inc.

Manufacturer Device	Replacement Source	Device	IC Master Page
◆UM2332	AMD	AM9232	
	CSG	MPS2332	
	Fairchild	F3532	
	GI	R03-9332	
	GouldAMI	S2333	
		S68A332	
	GTEMicro	G2332	
	Hitachi	HN46332	
	Intech	IM7332	
	Intel	2332	
	Mitsubishi	M58333	
	Motorola	**MCM68A332**	**4120**
	National	NM52132	
	NCR	NCR2332	
	NEC	UPD2332A	
	Panasonic	MN2332	

(Continued)

◆ Discontinued

The manufacturers report their devices can be used as direct replacements.
Performance details often differ, so compare the specifications considering your requirements.

Universal Semiconductor, Inc. (Cont'd)

Manufacturer Device	Replacement Source	Device	IC Master Page
◆UM2332	**RCA**	**CDM5333**	**1673,1677**
	Rockwell	R2332	
	SGS	M2332	
	Sharp	LH2332	
	Siemens	SA88332	
		SAB8332	
	Signetics	2332	
		2632A	
	SiliconG	SG3532	
	SSS	SCM23C32	
	SMC	ROM4732	
	Supertex	23SC32	
		CM3200	
	Synertek	SY2332	
	TI	TM2332	
		TMS2332	
		TMS4732	
	Toshiba	TMM2332	
		TMM333P	
	VTI	VT2332	
UM2333	Amperex	AM9233	
	CSG	MPS2333	
	Fairchild	F3533	
	GI	R03-9333	
	GouldAMI	S2333	
	NEC	UPD23328	
	RCA	**CDM5332**	**1673,1677,1678**
	Signetics	2332	
	SSS	SCM23C33	
	Supertex	23C32	
	Synertek	SY2333	
	Toshiba	TMM2332	
◆UM2333-30	Amperex	AM9233	
	CSG	MPS2333	
	Fairchild	F3533	
	GI	R03-9333	
	GouldAMI	S2333	
	NEC	UPD23328	
	RCA	**CDM5332**	**1673,1677,1678**
	Signetics	2332	
	SSS	SCM23C33	
	Supertex	23C32	
	Synertek	SY2333	
	Toshiba	TMM2332	
	Universal	UM2333	
◆UM2532	Hitachi	HN462532	
	National	MM2532	
		NMC2532	
		TDA2530	
		TDA2532	
	Plessey	TDA2530	
	Siemens	TDA2530	
	SiliconG	SG2532	
◆UM2732	AMD	AM2732	
	Hitachi	HN462732	
	Intel	2732	
		2732A	
		M2732	
	National	MM2732	
		NMC2732	
	Rockwell	R27C32	
	SGS	M2732A	
	Toshiba	TMM324C	
US574HC133	AMD	AM9128	
		AM9218	
	Cypress	CY7C128	
	Fujitsu	MB8128	
		MB8416	
	Harris	HM6116	
		HM6516	
	IDT	IDT6116	
	Intel	2128	
	MicroPwr	MP6116	
	Mitsubishi	M58275	
		M5M116	
		M5M5116	
		M5M5117	
		M5M5118	
		MS8725	
	Motorola	MCM2016	
		MCM2016H	
		MCM2128	
		MCM6116	**4119**
		MCM61L16	**4119**
		MCM65116	
	National	MMC2116	

(Continued)

Manufacturer Device	Replacement Source	Device	IC Master Page
US574HC133	NEC	µPD4016	
	OKI	MSM2128	
		MSM5128	**4732,4733**
	RCA	MWS6116A	
	SSS	883C21C16	
		BCM21C16	
		SCM21C16	
		SCM6116	
	TI	TMS4016	
	ThomsonCSF	ET2128	
	Toshiba	**TC5516A**	**4263**
		TMM2015A	
		TMM2016	
		TMM2016A	**4263**
	Samsung	KM6816	
	UMC	UM2128	
US74HC00	Hitachi	HD74HC00	
	Motorola	**MC74HC00**	**1122**
	National	MM74HC00	
	RCA	**CD74HC00**	**1149**
	SPI	SP74HC00	
	SGS	M74HC00	
	Signetics	**74HC00**	**1156**
	TI	SN74HC00	
	Toshiba	**TC40H000**	**1363**
US74HC02	Hitachi	HD74HC02	
	Motorola	**MC74HC02**	**1122**
	National	MM74HC02	
	RCA	**CD74HC02**	**1149**
	SPI	SP74HC02	
	SGS	M74HC02	
	Signetics	**74HC02**	**1156**
	TI	SN74HC02	
	Toshiba	**TC40H002**	**1363**
US74HC03	**Motorola**	**MC74HC03**	**1122**
	National	MM74HC03	
	RCA	**CD74HC03**	**1149**
	SGS	M74HC03	
	TI	SN74HC03	
	Toshiba	**TC74HC03**	**1363**
US74HC04	Hitachi	HD74HC04	
	Motorola	**MC74HC04**	**1124**
	National	MM74HC04	
	RCA	**CD74HC04**	**1149**
	SPI	SP74HC04	
	SGS	M74HC04	
	TI	SN74HC04	
	Toshiba	**TC40H004**	**1363**
US74HC05	Motorola	MC74HC05	
	TI	SN74HC05	
US74HC08	Hitachi	HD74HC08	
	Motorola	**MC74HC08**	**1122**
	National	MM74HC08	
	RCA	**CD74HC08**	**1149**
	SPI	SP74HC08	
	SGS	M74HC08	
	Signetics	**74HC08**	**1156**
	TI	SN74HC08	
US74HC10	Hitachi	HD74HC10	
	Motorola	**MC74HC10**	**1122**
	National	MM74HC10	
	RCA	**CD74HC10**	**1149**
	SPI	SP74HC10	
	SGS	M74HC10	
	Signetics	**74HC10**	**1156**
	SiliconG	SG75474	
	TI	SN74HC10	
	Toshiba	**TC40H010**	**1363**
US74HC107	Hitachi	HD74HC107	
	Motorola	**MC74HC107**	**1126**
	National	MM74HC107	
	Nitron	NC74HC107	
	RCA	**CD74HC107**	**1149**
	SPI	SP74HC107	
	SGS	M74HC107	
	Signetics	**74HC107**	**1156**
	TI	SN74HC107	
	Toshiba	**TC40H107**	**1363**
US74HC109	Hitachi	HD74HC109	
		HD74HC14	
	Motorola	**MC74HC109**	**1126**
	National	MM74HC109	
	Nitron	NC74HC109	
	RCA	**CD74HC109**	**1149**
	SPI	SP74HC109	
	SGS	M74HC109	
	Signetics	**74HC109**	**1156**
	TI	SN74HC109	
	Toshiba	**TC74HC109**	**1363**
US74HC11	Hitachi	HD74HC11	
	Motorola	**MC74HC11**	**1122**

(Continued)

Manufacturer Device	Replacement Source	Device	IC Master Page
US74HC11	National	MM74HC11	
	RCA	**CD74HC11**	**1149**
	SPI	SP74HC11	
	SGS	M74HC11	
	Signetics	**74HC11**	**1156**
	TI	SN74HC11	
	Toshiba	**TC40H011**	**1363**
US74HC112	Hitachi	HD74HC112	
	Motorola	**MC74HC112**	**1126**
	National	MM74HC112	
	RCA	**CD74HC112**	**1149**
	SPI	SP74HC112N	
	SGS	M74HC112	
	Signetics	**74HC112**	**1156**
	TI	SN74HC112	
US74HC113	Hitachi	HD74HC113	
	Motorola	**MC74HC113**	**1126**
	National	MM74HC113	
	SPI	SP74HC113	
	SGS	M74HC113	
	TI	SN74HC113	
US74HC123	Hitachi	HD74HC123	
	Motorola	MC74HC123	
	National	MM74HC123	
	SGS	M74HC123	
	Signetics	**74HC123**	**1157**
	TI	SN74HC123	
US74HC125	Hitachi	HD74HC125	
	Motorola	**MC74HC125**	**1124**
	National	MM74HC125	
	SPI	SP74HC125	
	SGS	M74HC125	
	TI	SN74HC125	
	Toshiba	**TC74HC125**	**1363**
US74HC126	Hitachi	HD74HC126	
	Motorola	**MC74HC126**	**1124**
	National	MM74HC126	
	SPI	SP74HC126	
	SGS	M74HC126	
	TI	SN74HC126	
	Toshiba	**TC74HC126**	**1363**
US74HC132	Hitachi	HD74HC132	
	Motorola	**MC74HC132**	**1125**
	National	MM74HC132	
	RCA	**CD74HC132**	**1149**
	SPI	SP74HC132	
	SGS	M74HC132	
	Signetics	**74HC132**	**1157**
	TI	SN74HC132	
US74HC133	**Motorola**	**MC74HC133**	**1122**
	National	MM74HC133	
	RCA	CD74HC133	
	SPI	SP74HC133	
	SGS	M74HC133	
	Signetics	74HC133	
	TI	SN74HC133	
US74HC137	Hitachi	HD74HC137	
	Motorola	MC74HC137	
	National	MM74HC137	
	SPI	SP74HC137	
	SGS	M74HC137	
	TI	SN74HC137	
	Toshiba	**TC74HC137**	**1363**
US74HC138	Hitachi	HD74HC138	
	Motorola	**MC74HC138**	**1130**
	National	MM74HC138	
	Nitron	NC74HC138	
	RCA	**CD74HC138**	**1150**
	SPI	SP74HC138	
	SGS	M74HC138	
	Signetics	**74HC138**	**1157**
	SSS	SS74HC138	
	TI	SN74HC138	
US74HC139	Hitachi	HD74HC139	
	Motorola	**MC74HC139**	**1130**
	National	MM74HC139	
	Nitron	NC74HC139	
	RCA	**CD74HC139**	**1150**
	SPI	SP74HC139	
	SGS	M74HC139	
	Signetics	**74HC139**	**1157**
	SSS	SS74HC139	
	TI	SN74HC139	
	Toshiba	**TC40H139**	**1363**
US74HC14	**Motorola**	**MC74HC14**	**1125**
	National	MM74HC14	
	RCA	**CD74HC14**	**1149**
	SPI	SP74HC14	
	SGS	M74HC14	
	Signetics	**74HC14**	**1156**
	TI	SN74HC14	

Manufacturer Device	Replacement Source	Device	IC Master Page
US74HC147	Hitachi	HD74HC147	
	Motorola	**MC74HC147**	**1131**
	National	MM74HC147	
	RCA	**CD74HC147**	**1150**
	SPI	SP74HC147	
	SGS	M74HC147	
	Signetics	**74HC147**	**1157**
	TI	SN74HC147	
US74HC151	Hitachi	HD74HC151	
	Motorola	**MC74HC151**	**1129**
	National	MM74HC151	
	RCA	**CD74HC151**	**1150**
	SPI	SP74HC151	
	SGS	M74HC151	
	Signetics	**74HC151**	**1157**
	TI	SN74HC151	
US74HC153	Hitachi	HD74HC153	
	Motorola	**MC74HC153**	**1129**
	National	MM74HC153	
	RCA	**CD74HC153**	**1150**
	SPI	SP74HC153	
	SGS	M74HC153	
	Signetics	**74HC153**	**1157**
	TI	SN74HC153	
	Toshiba	**TC40H153**	**1363**
US74HC154	Hitachi	HD74HC154	
	Motorola	**MC74HC154**	**1130**
	National	MM74HC154	
	RCA	**CD74HC154**	**1150**
	SGS	M74HC154	
	Signetics	**74HC154**	**1157**
	TI	SN74HC154	
US74HC157	Hitachi	HD74HC157	
	Motorola	**MC74HC157**	**1129**
	National	MM74HC157	
	Nitron	NC74HC157	
	RCA	**CD74HC157**	**1150**
	SPI	SP74HC157	
	SGS	M74HC157	
	Signetics	**74HC157**	**1157**
	TI	SN74HC157	
	Toshiba	**TC40H157**	**1363**
US74HC158	Hitachi	HD74HC158	
	Motorola	**MC74HC158**	**1129**
	National	MM74HC158	
	RCA	**CD74HC158**	**1150**
	SPI	SP74HC158	
	SGS	M74HC158	
	Signetics	**74HC158**	**1157**
	TI	SN74HC158	
	Toshiba	**TC40H158**	**1363**
US74HC160	**Motorola**	**MC74HC160**	**1127**
	National	MM74HC160	
	RCA	**CD74HC160**	**1150**
	SPI	SP74HC160	
	SGS	M74HC160	
	Signetics	**74HC160**	**1157**
	TI	SN74HC160	
US74HC161	Hitachi	HD74HC161	
	Motorola	**MC74HC161**	**1127**
	National	MM74HC161	
	RCA	**CD74HC161**	**1150**
	SPI	SP74HC161	
	SGS	M74HC161	
	Signetics	**74HC161**	**1157**
	TI	SN74HC161	
US74HC162	Hitachi	HD74HC162	
	Motorola	**MC74HC162**	**1127**
	National	MM74HC162	
	RCA	**CD74HC162**	**1150**
	SPI	SP74HC162	
	SGS	M74HC162	
	Signetics	**74HC162**	**1157**
	TI	SN74HC162	
US74HC163	Hitachi	HD74HC163	
	Motorola	**MC74HC163**	**1127**
	National	MM74HC163	
	RCA	**CD74HC163**	**1150**
	SPI	SP74HC163	
	SGS	M74HC163	
	Signetics	**74HC163**	**1157**
	TI	SN74HC163	
US74HC164	Hitachi	HD74HC164	
	Motorola	**MC74HC164**	**1128**
	National	MM74HC164	
	RCA	**CD74HC164**	**1149**
	SPI	SP74HC164	
	SGS	M74HC164	
	Signetics	**74HC164**	**1157**
	TI	SN74HC164	
US74HC165	Hitachi	HD74HC165	
	Motorola	**MC74HC165**	**1128**

(Continued)

◆ Discontinued

Bold face device numbers indicate manufacturers data is provided in the IC Master on the pages noted.

Universal Semiconductor, Inc. (Cont'd)

Manufacturer Device	Replacement Source	Device	IC Master Page
US74HC165	National	MM74HC165	
	RCA	**CD74HC165**	**1149**
	SPI	SP74HC165	
	SGS	M74HC165	
	Signetics	**74HC165**	**1157**
	TI	SN74HC165	
US74HC166	Motorola	MC74HC166	
	Nitron	NC74HC166	
	RCA	**CD74HC166**	**1149**
	SGS	M74HC166	
	Signetics	**74HC166**	**1157**
	TI	SN74HC166	
US74HC173	Hitachi	HD74HC173	
	Motorola	**MC74HC173**	**1126**
	National	MM74HC173	
	RCA	**CD74HC173**	**1149**
	SPI	SP74HC173	
	SGS	M74HC173	
	Signetics	**74HC173**	**1157**
	TI	SN74HC173	
US74HC174	Hitachi	HD74HC174	
	Motorola	**MC74HC174**	**1126**
	National	MM74HC174	
	Nitron	NC74HC174	
	RCA	**CD74HC174**	**1149**
	SPI	SP74HC174	
	SGS	M74HC174	
	Signetics	74HC174	
	TI	SN74HC174	
	Toshiba	**TC40H174**	**1363**
US74HC175	Hitachi	HD74HC175	
	Motorola	**MC74HC175**	**1126**
	National	MM74HC175	
	Nitron	NC74HC175	
	RCA	**CD74HC175**	**1149**
	SPI	SP74HC175	
	SGS	M74HC175	
	Signetics	**74HC175**	**1157**
	TI	SN74HC175	
	Toshiba	**TC40H175**	**1363**
US74HC190	Hitachi	HD74HC190	
	Motorola	MC74HC190	
	RCA	**CD74HC190**	**1150**
	SGS	M74HC190	
	Signetics	PC74HC190	
		PCF74HC190	
	TI	SN74HC190	
	Toshiba	**TC74HC190**	**1363**
US74HC191	Hitachi	HD74HC191	
	Nitron	NC74HC191	
	RCA	**CD74HC191**	**1150**
	SGS	M74HC191	
	Signetics	**74HC191**	**1157**
	TI	SN74HC191	
US74HC192	Hitachi	HD74HC192	
	Motorola	**MC74HC192**	**1127**
	National	MM74HC192	
	RCA	**CD74HC192**	**1150**
	SPI	SP74HC192	
	SGS	M74HC192	
	Signetics	**74HC192**	**1157**
	TI	SN74HC192	
	Toshiba	**TC40H192**	**1363**
US74HC193	Hitachi	HD74HC193	
	Motorola	**MC74HC193**	**1127**
	National	MM74HC193	
	RCA	**CD74HC193**	**1150**
	SPI	SP74HC193	
	SGS	M74HC193	
	Signetics	**74HC193**	**1157**
	TI	SN74HC193	
	Toshiba	**TC40H193**	**1363**
US74HC194	Hitachi	HD74HC194	
	Motorola	**MC74HC194**	**1128**
	National	MM74HC194	
	RCA	**CD74HC194**	**1149**
	SPI	SP74HC194	
	SGS	M74HC194	
	Signetics	**74HC194**	**1157**
	TI	SN74HC194	
US74HC195	Hitachi	HD74HC195	
	Motorola	**MC74HC195**	**1128**
	National	MM74HC195	
	RCA	**CD74HC195**	**1149**
	SPI	SP74HC195	
	SGS	M74HC195	
	Signetics	**74HC195**	**1157**
	TI	SN74HC195	
US74HC20	Hitachi	HD74HC20	
	Motorola	**MC74HC20**	**1122**
	National	MM74HC20	
	RCA	**CD74HC20**	**1149**
	SPI	SP74HC20	
	SGS	M74HC20	
	Signetics	**74HC20**	**1156**
	TI	SN74HC20	
	Toshiba	**TC40H020**	**1363**
US74HC21	Hitachi	HD74HC21	
	TI	SN74HC21	
	Toshiba	**TC74HC21**	**1363**
US74HC221	Motorola	MC74HC221	
	National	MM74HC221	
	RCA	**CD74HC221**	**1150**
	SGS	M74HC221	
	Signetics	74HC221	
US74HC237	Hitachi	HD74HC237	
	Motorola	MC74HC237	
	SGS	M74HC237	
	TI	SN74HC137	
		SN74HC237	
	Toshiba	**TC74HC237**	**1363**
US74HC240	Hitachi	HD74HC240	
	Mitel	MD74HC240	
	Motorola	**MC74HC240**	**1124**
	National	MM74HC240	
	Nitron	NC74HC240	
	RCA	**CD74HC240**	**1149**
	SPI	SP74HC240	
	SGS	M74HC240	
	Signetics	**74HC240**	**1157**
	SSS	SS74HC240	
	Supertex	SI74HC240	
	TI	SN74HC240	
	Toshiba	**TC40H240**	**1363**
	Zytrex	ZX74HC240	
US74HC242	Hitachi	HD74HC242	
	Motorola	**MC74HC242**	**1124**
	National	MM74HC242	
	Nitron	NC74HC242	
	RCA	**CD74HC242**	**1149**
		SGN	
	SPI	SP74HC242	
	SGS	M74HC242	
	Signetics	**74HC242**	**1158**
	TI	SN74HC242	
US74HC243	Hitachi	HD74HC243	
	Motorola	**MC74HC243**	**1124**
		MC74HC245	**1124**
	National	MM74HC243	
	RCA	**CD74HC243**	**1149**
	SPI	SP74HC243	
	SGS	M74HC243	
		M74HC245	
	Signetics	**74HC243**	**1158**
	TI	SN74HC243	
US74HC244	Hitachi	HD74HC244	
	Mitel	MD74HC244	
	Motorola	**MC74HC244**	**1124**
	National	MM74HC244	
	Nitron	NC74HC244	
	RCA	**CD74HC244**	**1149**
	SPI	SP74HC244	
	SGS	M74HC244	
	Signetics	**74HC244**	**1158**
	SSS	SS74HC244	
	Supertex	SI74HC244	
	TI	SN74HC244	
	Zytrex	ZX74HC244	
US74HC245	Hitachi	HD74HC245	
	Motorola	**MC74HC245**	**1124**
	National	MM74HC245	
	Nitron	NC74HC245	
	RCA	**CD74HC245**	**1149**
	Signetics	**74HC245**	**1158**
	SSS	SS74HC245	
	TI	SN74HC245	
US74HC251	Hitachi	HD74HC251	
	Motorola	**MC74HC251**	**1129**
	National	MM74HC251	
	RCA	**CD74HC251**	**1150**
	SPI	SP74HC251	
	SGS	M74HC251	
	Signetics	**74HC251**	**1158**
	TI	SN74HC251	
US74HC253	Hitachi	HD74HC253	
	Motorola	**MC74HC253**	**1129**
	National	MM74HC253	
	RCA	**CD74HC253**	**1150**
	SPI	SP74HC253	
	SGS	M74HC253	
			(Continued)
US74HC253	**Signetics**	**74HC253**	**1158**
	TI	SN74HC253	
US74HC257	Hitachi	HD74HC257	
	Motorola	**MC74HC257**	**1129**
	National	MM74HC257	
	Nitron	NC74HC257	
	RCA	**CD74HC257**	**1150**
	SPI	SP74HC257	
	SGS	M74HC257	
	Signetics	**74HC257**	**1158**
	TI	SN74HC257	
US74HC258	Hitachi	HD74HC258	
	Motorola	MC74HC258	
	TI	SN74HC258	
	Toshiba	**TC74HC258**	**1363**
US74HC259	Hitachi	HD74HC259	
	Motorola	**MC74HC259**	**1126**
	National	MM74HC259	
	RCA	**CD74HC259**	**1150**
	SPI	SP74HC259	
	Signetics	**74HC259**	**1158**
	TI	SN74HC259	
US74HC266	Hitachi	HD74HC266	
	Motorola	**MC74HC266**	**1123**
	National	MM74HC266	
	SPI	SP74HC266	
	SGS	M74HC266	
	Signetics	**74HC266**	**1158**
	TI	SN74HC266	
US74HC27	**Motorola**	**MC74HC27**	**1122**
	National	MM74HC27	
	RCA	**CD74HC27**	**1149**
	SPI	SP74HC27	
	SGS	M74HC27	
	Signetics	**74HC27**	**1156**
	TI	SN74HC27	
	Toshiba	**TC40H027**	**1363**
US74HC273	CTI	74HC273	
	Hitachi	HD74HC273	
	Motorola	**MC74HC273**	**1126**
	Nitron	NC74HC273	
	RCA	**CD74HC273**	**1149**
	SPI	SP74HC273	
	SGS	M74HC273	
	Signetics	**74HC273**	**1158**
	TI	SN74HC273	
US74HC283	**Motorola**	**MC74HC283**	**1132**
	SGS	M74HC283	
US74HC298	Hitachi	HD74HC298	
	Motorola	MC74HC298	
	SPI	SP74HC298	
	SGS	M74HC298	
	TI	SN74HC298	
US74HC299	**Motorola**	**MC74HC299**	**1129**
	National	MM74HC299	
	RCA	**CD74HC299**	**1149**
	SGS	M74HC299	
	Signetics	**74HC299**	**1158**
US74HC30	Hitachi	HD74HC30	
	Motorola	**MC74HC30**	**1122**
	National	MM74HC30	
	RCA	**CD74HC30**	**1149**
	SPI	SP74HC30	
	SGS	M74HC30	
	Signetics	**74HC30**	**1156**
	TI	SN74HC30	
US74HC32	Hitachi	HD74HC27	
		HD74HC32	
	Motorola	**MC74HC32**	**1122**
	National	MM74HC32	
	RCA	**CD74HC32**	**1149**
	SPI	SP74HC32	
	SGS	M74HC32	
	Signetics	**74HC32**	**1156**
	TI	SN74HC32	
	Toshiba	**TC40H032**	**1363**
US74HC354	Hitachi	HD74HC354	
	Motorola	**MC74HC354**	**1130**
	National	MM74HC354	
	RCA	**CD74HC354**	**1150**
	SGS	M74HC354	
	Signetics	**74HC354**	**1158**
	TI	SN74HC354	
US74HC356	Hitachi	HD74HC356	
	Motorola	**MC74HC356**	**1130**
	National	MM74HC356	
	RCA	**CD74HC356**	**1150**
	SGS	M74HC356	
	Signetics	**74HC356**	**1158**
	TI	SN74HC356	
US74HC365	Hitachi	HD74HC365	
	Motorola	**MC74HC365**	**1124**
			(Continued)
US74HC365	National	MM74HC365	
	RCA	**CD74HC365**	**1149**
	SPI	SP74HC365	
	SGS	M74HC365	
	TI	SN74HC365	
US74HC366	Hitachi	HD74HC366	
	Motorola	**MC74HC366**	**1124**
	National	MM74HC366	
	RCA	**CD74HC366**	**1149**
	SPI	SP74HC366	
	SGS	M74HC366	
	Signetics	**74HC366**	**1158**
	TI	SN74HC366	
US74HC367	Hitachi	HD74HC367	
	Motorola	**MC74HC367**	**1124**
	National	MM74HC367	
	Nitron	NC74HC367	
	RCA	**CD74HC367**	**1149**
	SPI	SP74HC367	
	SGS	M74HC367	
	Signetics	**74HC367**	**1158**
	TI	SN74HC367	
US74HC368	Hitachi	HD74HC368	
	Motorola	**MC74HC368**	**1124**
	National	MM74HC368	
	RCA	**CD74HC368**	**1149**
	SGS	M74HC368	
	Signetics	**74HC368**	**1158**
	TI	SN74HC368	
US74HC373	Hitachi	HD74HC373	
	Mitel	MD74HC373	
	Motorola	**MC74HC373**	**1126**
	National	MM74HC373	
	Nitron	NC74HC373	
	RCA	**CD74HC373**	**1150**
	SPI	SP74HC373	
	SGS	M74HC373	
	Signetics	**74HC373**	**1158**
	SSS	SS74HC373	
	Supertex	SI74HC373	
	TI	SN74HC373	
	Zytrex	ZX74HC373	
US74HC374	Hitachi	HD74HC374	
	Mitel	MD74HC374	
	Motorola	**MC74HC374**	**1126**
	National	MM74HC374	
	Nitron	NC74HC374	
	RCA	**CD74HC374**	**1149**
	SPI	SP74HC374	
	SGS	M74HC374	
	Signetics	**74HC374**	**1158**
	SSS	SS74HC374	
	TI	SN74HC374	
	Zytrex	ZX74HC374	
US74HC375	Hitachi	HD74HC375	
	Motorola	MC74HC375	
	TI	SN74HC375	
	Toshiba	**TC74HC375**	**1363**
US74HC377	Hitachi	HD74HC377	
	Motorola	MC74HC377	
	RCA	**CD74HC377**	**1149**
	SGS	M74HC377	
	Signetics	**74HC377**	**1158**
	TI	SN74HC377	
US74HC390	Hitachi	HD74HC390	
	Motorola	**MC74HC390**	**1127**
	National	MM74HC390	
	RCA	**CD74HC390**	**1150**
	SPI	SP74HC390	
	SGS	M74HC390	
	Signetics	**74HC390**	**1158**
	TI	SN74HC390	
US74HC393	Hitachi	HD74HC393	
	Motorola	**MC74HC393**	**1127**
	National	MM74HC393	
	Nitron	NC74HC393	
	RCA	**CD74HC393**	**1150**
	SPI	SP74HC393	
	SGS	M74HC393	
	Signetics	**74HC393**	**1158**
	TI	SN74HC393	
US74HC4002	**Motorola**	**MC74HC4002**	**1123**
	National	MM74HC4002	
	RCA	**CD74HC4002**	**1149**
	SPI	SP74HC4002	
	SGS	M74HC4002	
	Signetics	**74HC4002**	**1160**
	TI	SN74HC4002	
US74HC4016	**Motorola**	**MC74HC4016**	**1130**
	RCA	**CD74HC4016**	**1149**
US74HC4017	**Motorola**	**MC74HC4017**	**1128**
	National	MM74HC4017	
			(Continued)

◆ Discontinued

The manufacturers report their devices can be used as direct replacements.
Performance details often differ, so compare the specifications considering your requirements.

Universal Semiconductor, Inc. (Cont'd)

Manufacturer Device	Replacement Source	Device	IC Master Page
US74HC4017	**RCA**	**CD74HC4017**	1150
	SPI	SP74HC4017	
	SGS	M74HC4017	
	Signetics	**74HC4017**	1160
	TI	SN74HC4017	
US74HC4020	Hitachi	HD74HC4020	
	Motorola	**MC74HC4020**	1128
	National	MM74HC4020	
	RCA	**CD74HC4020**	1150
	SPI	SP74HC4020	
	SGS	M74HC4020	
	Signetics	**74HC4020**	1160
	TI	SN74HC4020	
US74HC4024	Hitachi	HD74HC4024	
	Motorola	MC74HC4024	
	RCA	**CD74HC4024**	1150
	SGS	M74HC4024	
	Signetics	**74HC4024**	1160
	TI	SN74HC4024	
US74HC4040	Hitachi	HD74HC4040	
	Motorola	**MC74HC4040**	1128
	National	MM74HC4040	
	RCA	**CD74HC4040**	1150
	SPI	SP74HC4040	
	SGS	M74HC4040	
	Signetics	**74HC4040**	1160
	TI	SN74HC4040	
US74HC4049	**Motorola**	**MC74HC4049**	1124
	National	MM74HC4049	
	RCA	**CD74HC4049**	1149
	SGS	M74HC4049	
	Signetics	**74HC4049**	1160
	TI	SN74HC4049	
US74HC4050	Motorola	MC84HC4050	
	RCA	**CD74HC4050**	1149
	SGS	M74HC4050	
US74HC4051	**Motorola**	**MC74HC4051**	1130
	RCA	**CD74HC4051**	1150
	SGS	M74HC4051	
	Signetics	**74HC4051**	1160
	TI	SN74HC4051	
US74HC4052	**Motorola**	**MC74HC4052**	1130
	RCA	**CD74HC4052**	1150
	SGS	M74HC4052	
	Signetics	**74HC4052**	1160
	TI	SN74HC4052	
US74HC4053	**Motorola**	**MC74HC4053**	1130
	RCA	**CD74HC4053**	1150
	SGS	M74HC4053	
	Signetics	**74HC4053**	1160
	TI	SN74HC4053	
US74HC4060	**Motorola**	**MC74HC4060**	1128
	National	MM74HC4060	
	RCA	**CD74HC4060**	1150
	SGS	M74HC4060	
	Signetics	**74HC4060**	1160
	TI	SN74HC4060	
US74HC4066	**Motorola**	**MC74HC4066**	1130
	RCA	CE74HC4066	
	SGS	M74HC4066	
	Signetics	PC74HC4066	
	TI	SN74HC4075	
US74HC4075	AMD	AM2167	
	Cypress	CY7C167	
	Inmos	IMS1400	
	Motorola	**MC74HC4075**	1122
	Panasonic	MN74HC4075	
	RCA	**CD74HC4075**	1149
	SGS	M74HC4075	
	Signetics	PC74HC4075	
	Toshiba	**TC74HC4075**	1363
US74HC4078	**Motorola**	**MC74HC4078**	1123
	National	MM74HC4078	
	SPI	SP74HC4078	
	SGS	M74HC4078	
	TI	SN74HC4078A	
	Toshiba	**TC74HC4078**	1363
US74HC42	Hitachi	HD74HC42	
	Motorola	**MC74HC42**	1130
	National	MM74HC42	
	Nitron	NC74HC42	
	RCA	**CD74HC42**	1150
	SPI	SP74HC42	
	SGS	M74HC42	
	Signetics	**74HC42**	1156
	TI	SN74HC42	
US74HC423	Hitachi	HD74HC423	
	TI	SN74HC423	
	Toshiba	**TC74HC423**	1363
US74HC4511	TI	SN74HC4511	
US74HC4514	Hitachi	HD74HC4514	
	Motorola	**MC74HC4514**	1130
	National	MM74HC4514	
	RCA	**CD74HC4514**	1150
	SGS	M74HC4514	
	Signetics	**74HC4514**	1161
	TI	SN74HC4514	
US74HC4538	**Motorola**	**MC74HC4538**	1131
	National	MM74HC4538	
	RCA	**CD74HC4538**	1150
	SGS	M74HC4538	
	Signetics	**74HC4538**	1161
US74HC4543	Cypress	CY7C172	
	IDT	IDT71682	
	Motorola	**MC74HC4543**	1130
	National	MM74HC4543	
	RCA	**CD74HC4543**	1150
	SGS	M74HC4543	
	Signetics	PC74HC4543	
	Toshiba	**TC74HC4543**	1363
US74HC51	Hitachi	HD74HC51	
	Motorola	MC74HC51	
	National	MM74HC51	
	Nitron	NC74HC51	
	TI	SN74HC51	
	Toshiba	**TC74HC51**	1363
US74HC533	Hitachi	HD74HC533	
	Motorola	**MC74HC533**	1126
	National	MM74HC533	
	RCA	**CD74HC533**	1150
	SPI	SP74HC533	
	SGS	M74HC533	
	Signetics	**74HC533**	1159
	SSS	SS74HC533	
	TI	SN74HC533	
US74HC534	Hitachi	HD74HC534	
	Motorola	**MC74HC534**	1127
	National	MM74HC534	
	RCA	**CD74HC534**	1149
	SPI	SP74HC534	
	SGS	M74HC534	
	Signetics	**74HC534**	1159
	SSS	SS74HC534	
	TI	SN74HC534	
US74HC540	Hitachi	HD74HC540	
	Motorola	**MC74HC540**	1125
	RCA	**CD74HC540**	1149
	SGS	M74HC540	
	Signetics	**74HC540**	1159
	SSS	SS74HC540	
	TI	SN74HC540	
	Toshiba	**TC74HC540**	1363
US74HC541	Hitachi	HD74HC541	
	Motorola	**MC74HC541**	1125
	RCA	**CD74HC541**	1149
	SGS	M74HC541	
	Signetics	**74HC541**	1159
	SSS	SS74HC541	
	TI	SN74HC541	
US74HC563	Hitachi	HD74HC563	
	Motorola	**MC74HC563**	1126
	National	MM74HC563	
	RCA	**CD74HC563**	1150
	SPI	SP74HC563	
	SGS	M74HC563	
	Signetics	**74HC563**	1159
	SSS	SS74HC563	
	TI	SN74HC563	
US74HC564	Hitachi	HD74HC564	
	Motorola	**MC74HC564**	1127
	National	MM74HC564	
	RCA	**CD74HC564**	1149
		MC74HC564	
	SGS	M74HC564	
	Signetics	**74HC564**	1159
	SSS	SS74HC564	
	TI	SN74HC564	
US74HC573	Hitachi	HD74HC573	
	Motorola	**MC74HC573**	1126
	National	MM74HC573	
	RCA	**CD74HC573**	1150
	SPI	SP74HC573	
	SGS	M74HC573	
	Signetics	**74HC573**	1159
	SSS	SS74HC573	
	TI	SN74HC573	
	Toshiba	**TC74HC573**	1363
US74HC574	Hitachi	HD74HC574	
	Motorola	**MC74HC574**	1127
	National	MM74HC574	
	RCA	**CD74HC574**	1149
		(Continued)	
US74HC574	SPI	SP74HC574	
	SGS	M74HC574	
	Signetics	**74HC574**	1159
	SSS	SS74HC574	
	TI	SN74HC574	
US74HC58	Motorola	MC74HC58	
	National	MM74HC58	
	TI	SN74HC58	
US74HC589	Motorola	MC74HC589	
	TI	SN74HC589	
US74HC590	Hitachi	HD74HC590	
	Motorola	MC74HC590	
	TI	SN74HC590	
US74HC592	Hitachi	HD74HC592	
	Motorola	MC74HC592	
	TI	SN74HC592	
US74HC593	Hitachi	HD74HC593	
	Motorola	MC74HC593	
	TI	SN74HC593	
US74HC595	Cypress	CY7C164	
	Hitachi	HD74HC595	
	Inmos	IMS1620	
	Motorola	MC74HC595	
	NEC	MPD4362	
	SGS	M74HC595	
	TI	SN74HC595	
US74HC597	Hitachi	HD74HC597	
	TI	SNN74HC597	
US74HC640	Hitachi	HD74HC640	
	Motorola	**MC74HC640**	1125
	National	MM74HC640	
	Nitron	NC74HC640	
	RCA	**CD74HC640**	1149
	Signetics	**74HC640**	1159
	SSS	SS74HC640	
	TI	SN74HC640	
US74HC643	Hitachi	HD74HC643	
	Motorola	**MC74HC643**	1125
	National	MM74HC643	
	RCA	**CD74HC643**	1149
	SGS	M74HC643	
	Signetics	**74HC643**	1159
	SSS	SS74HC643	
	TI	SN74HC643	
US74HC646	Hitachi	HD74HC646	
	Motorola	**MC74HC646**	1125
	National	MM74HC646	
	Nitron	NC74HC646	
	RCA	**CD74HC646**	1149
	SGS	M74HC646	
	Signetics	**74HC646**	1159
	TI	SN74HC646	
US74HC648	Hitachi	HD74HC648	
	Motorola	**MC74HC648**	1125
	National	MM74HC648	
	RCA	**CD74HC648**	1149
	SGS	M74HC648	
	Signetics	**74HC648**	1159
	TI	SN74HC648	
US74HC73	Hitachi	HD74HC73	
	Motorola	**MC74HC73**	1126
	National	MM74HC73	
	RCA	**CD74HC73**	1149
	SPI	SP74HC73	
	SGS	M74HC73	
	Signetics	**74HC73**	1156
	TI	SN74HC73	
	Toshiba	**TC74HC73**	1363
US74HC74	Hitachi	HD74HC74	
	Motorola	**MC74HC74**	1126
	National	MM74HC74	
	Nitron	NC74HC74	
	RCA	**CD74HC74**	1149
	SPI	SP74HC74	
	SGS	M74HC74	
	Signetics	**74HC74**	1156
	TI	SN74HC74	
	Toshiba	**TC40H074**	1363
US74HC75	Hitachi	HD74HC75	
	Motorola	**MC74HC75**	1126
	National	MM74HC75	
	RCA	**CD74HC75**	1150
	SPI	SP74HC75	
	SGS	M74HC75	
	Signetics	**74HC75**	1156
	TI	SN74HC75	
	Toshiba	**TC74HC75**	1363
US74HC76	Hitachi	HD74HC76	
	Motorola	**MC74HC76**	1126
	National	MM74HC76	
	SPI	SP74HC76	
	SGS	M74HC76	
		(Continued)	
US74HC76	Signetics	74HC76	
	TI	SN74HC76	
	Toshiba	**TC40H076**	1363
US74HC85	**Motorola**	**MC74HC85**	1131
	National	MM74HC85	
	RCA	**CD74HC85**	1150
	SPI	SP74HC85	
	SGS	M74HC85	
	Signetics	**74HC85**	1156
	TI	SN74HC85	
US74HC86	Hitachi	HD74HC86	
	Motorola	**MC74HC86**	1123
	National	MM74HC86	
	RCA	**CD74HC86**	1149
	SPI	SP74HC86N	
	SGS	M74HC86	
	Signetics	**74HC86**	1156
	TI	SN74HC86	
US74HCT00	**RCA**	**CD74HCT00**	1149
	Signetics	**74HCT00**	1156
US74HCT02	**RCA**	**CD74HCT02**	1149
	Signetics	**74HCT02**	1156
US74HCT04	Motorola	MC74HCT04	
	RCA	**CD74HCT04**	1149
	SGS	M74HCT04	
US74HCT08	**RCA**	**CD74HCT08**	1149
	Signetics	**74HCT08**	1156
US74HCT10	**RCA**	**CD74HCT10**	1149
	Signetics	**74HCT10**	1156
US74HCT107	Nitron	NC74HCT107	
	RCA	CD74HCT107	
	Signetics	**74HCT107**	1156
US74HCT109	Nitron	NC74HCT109	
	RCA	CD74HCT109	
	Signetics	**74HCT109**	1156
US74HCT11	**RCA**	**CD74HCT11**	1149
	Signetics	**74HCT11**	1156
US74HCT112	RCA	CD74HCT112	
	Signetics	**74HCT112**	1156
US74HCT123	**RCA**	**CD74HCT123**	1150
	Signetics	**74HCT123**	1157
US74HCT125	Hitachi	HD74HCT125	
	Motorola	MC74HCT125	
	TI	SN74HCT125	
US74HCT126	Hitachi	HD74HCT126	
	Motorola	MC74HCT126	
	TI	SN74HCT126	
US74HCT132	**RCA**	**CD74HCT132**	1149
	Signetics	**74HCT132**	1157
US74HCT137	CTI	74HCT137	
	MicroTech	74HCT137	
		74HCTR137	
	SGS	M74HCT137	
	Supertex	74HCT137	
	TI	SN74HCT137	
	Toshiba	**TC74HCT137**	1363
US74HCT139	IDT	IDT74HCT139	
	Mitel	MD74HCT139	
	Nitron	NC74HCT139	
	Plessey	MV74HCT139	
	SPI	SP74HCT139	
	Signetics	**74HCT139**	1157
	Zytrex	ZX74HCT139-2	
US74HCT14	**RCA**	**CD74HCT14**	1149
	Signetics	**74HCT14**	1156
US74HCT147	**RCA**	**CD74HCT147**	1150
	Signetics	**74HCT147**	1157
US74HCT151	**RCA**	**CD74HCT151**	1150
	Signetics	**74HCT151**	1157
US74HCT153	**RCA**	**CD74HCT153**	1150
	Signetics	**74HCT153**	1157
US74HCT154	**RCA**	**CD74HCT154**	1150
	Signetics	**74HCT154**	1157
US74HCT157	Motorola	MC74HCT157	
	Nitron	NC74HCT157	
	RCA	**CD74HCT157**	1150
	Signetics	**74HCT157**	1157
US74HCT158	Motorola	MC74HCT158	
	RCA	**CD74HCT158**	1150
	Signetics	**74HCT158**	1157
US74HCT160	National	MM74HCT160	
	RCA	**CD74HCT160**	1150
	Signetics	**74HCT160**	1157
	Zytrex	ZX74HCT160-2	
US74HCT161	**RCA**	**CD74HCT161**	1150
	Signetics	**74HCT161**	1157
	Zytrex	ZX74HCT161-2	
US74HCT162	**RCA**	**CD74HCT162**	1150
	Signetics	**74HCT162**	1157
	Zytrex	ZX74HCT162-2	

◆ Discontinued

Bold face device numbers indicate manufacturers data is provided in the IC Master on the pages noted.

Universal Semiconductor, Inc. (Cont'd)

Manufacturer Device	Replacement Source	Device	IC Master Page
US74HCT163	**RCA**	**CD74HCT163**	**1150**
	Signetics	**74HCT163**	**1157**
	Zytrex	ZX74HCT163-2	
US74HCT164	RCA	CD74HCT164	
	Signetics	**74HCT164**	**1157**
US74HCT165	RCA	CD74HCT165	
	Signetics	**74HCT165**	**1157**
US74HCT166	Nitron	NC74HCT166	
	RCA	**CD74HCT166**	**1149**
	Signetics	**74HCT166**	**1157**
US74HCT173	RCA	CD74HCT173	
	Signetics	**74HCT173**	**1157**
US74HCT174	Nitron	NC74HCT174	
	RCA	CD74HCT174	
	Signetics	74HCT174	
US74HCT175	Nitron	NC74HCT175	
	RCA	CD74HCT175	
	Signetics	**74HCT175**	**1157**
US74HCT190	**RCA**	**CD74HCT190**	**1150**
	Signetics	**74HCT190**	**1157**
US74HCT191	Nitron	NC74HCT191	
	RCA	**CD74HCT191**	**1150**
	Signetics	**74HCT191**	**1157**
US74HCT192	**RCA**	**CD74HCT192**	**1150**
	Signetics	**74HCT192**	**1157**
US74HCT193	**RCA**	**CD74HCT193**	**1150**
	Signetics	**74HCT193**	**1157**
US74HCT194	**RCA**	**CD74HCT194**	**1149**
	Signetics	**74HCT194**	**1157**
US74HCT195	**RCA**	**CD74HCT195**	**1149**
	Signetics	**74HCT195**	**1157**
US74HCT20	**RCA**	**CD74HCT20**	**1149**
	Signetics	**74HCT20**	**1156**
US74HCT221	**RCA**	**CD74HCT221**	**1150**
	Signetics	74HCT221	
US74HCT237	Plessey	MV74HCT237	
	Supertex	74HCT237	
US74HCT240	CTI	74HCT240	
	Hitachi	HD74HCT240	
	Micrel	MIC74HCT240	
	MicroTech	74HCTR240	
	Mitel	MD74HCT240	
	Motorola	MC74HCT240	
	National	MM74HCT240	
	Nitron	NC74HCT240	
	Plessey	MV74HCT240	
	RCA	**CD74HCT240**	**1149**
	SPI	SP74HCT240	
	SGS	M74HCT240	
	Signetics	**74HCT240**	**1157**
	SSS	SS74HCT240	
	Supertex	SI74HCT240	
	TI	SN74HCT240	
	Toshiba	**TC74HCT240**	**1363**
	Zytrex	ZX74HCT240-2	
US74HCT241	CTI	74HCT241	
	Hitachi	HD74HCT241	
	Micrel	MIC74HCT241	
	MicroTech	74HCTR241	
	Mitel	MD74HCT241	
	Motorola	MC74HCT241	
	National	MM74HCT241	
	Nitron	NC74HCT241	
	Plessey	MV74HCT241	
	RCA	**CD74HCT241**	**1149**
	SPI	SP74HCT241	
	SGS	M74HCT241	
	Signetics	**74HCT241**	**1157**
	SSS	SS74HCT241	
	Supertex	SI74HCT241	
	TI	SN74HCT241	
	Toshiba	**TC74HCT241**	**1363**
	Zytrex	ZX74HCT241-2	
US74HCT242	Hitachi	HD74HCT242	
	Micrel	MIC74HCT242	
	Nitron	NC74HCT242	
	RCA	**CD74HCT242**	**1149**
	Signetics	**74HCT242**	**1158**
	TI	SN74HCT242	
US74HCT243	Hitachi	HD74HCT243	
	Micrel	MIC74HCT243	
	RCA	CD74HCT243	
	Signetics	**74HCT243**	**1158**
	TI	SN74HCT243	
US74HCT244	CTI	74HCT244	
	Hitachi	HD74HCT244	
	Micrel	MIC74HCT244	
	MicroTech	74HCTR244	
	Mitel	MD74HCT244	
US74HCT244	Motorola	MC74HCT244	
	National	MM74HCT244	
	Nitron	NC74HCT244	
	Plessey	MV74HCT244	
	RCA	**CD74HCT244**	**1149**
	SPI	SP74HCT244	
	SGS	M74HCT244	
	Signetics	**74HCT244**	**1158**
	SSS	SS74HCT244	
	Supertex	SI74HCT244	
	TI	SN74HCT244	
	Toshiba	**TC74HCT244**	**1363**
	Zytrex	ZX74HCT244-2	
US74HCT245	CTI	74HCT245	
	GTEMicro	G74SC245	
	Hitachi	HD74HCT245	
	Micrel	MIC74HCT245	
	MicroTech	74HCTR245	
	Mitel	MD74HCT245	
	Motorola	MC74HCT245	
	National	MM74HCT245	
	Plessey	MV74HCT245	
		MV74SC245	
	RCA	**CD74HCT245**	**1149**
	SPI	SP74HCT245	
	SGS	M74HCT245	
	Signetics	**74HCT245**	**1158**
	SSS	SS74HCT245	
	TI	SN74HCT245	
	Toshiba	**TC74HCT245**	**1363**
US74HCT251	**RCA**	**CD74HCT251**	**1150**
	Signetics	**74HCT251**	**1158**
US74HCT253	**RCA**	**CD74HCT253**	**1150**
	Signetics	**74HCT253**	**1158**
US74HCT257	Motorola	MC74HCT257	
	Nitron	NC74HCT257	
	RCA	**CD74HCT257**	**1150**
	Signetics	**74HCT257**	**1158**
US74HCT259	**RCA**	**CD74HCT259**	**1150**
	Signetics	**74HCT259**	**1158**
US74HCT266	Signetics	74HCT266	
US74HCT27	**RCA**	**CD74HCT27**	**1149**
	Signetics	**74HCT27**	**1156**
US74HCT273	CTI	74HCT139	
	Nitron	NC74HCT273	
	RCA	**CD74HCT139**	**1150**
		CD74HCT273	
	Signetics	**74HCT273**	**1158**
	SSS	SS74HCT139	
US74HCT299	**RCA**	**CD74HCT299**	**1149**
	Signetics	**74HCT299**	**1158**
US74HCT30	**RCA**	**CD74HCT30**	**1149**
	Signetics	**74HCT30**	**1156**
	Universal	US74HCT32	
US74HCT32	**RCA**	**CD74HCT30**	**1149**
	Signetics	**74HCT30**	**1156**
	Universal	US74HCT30	
US74HCT354	**RCA**	**CD74HCT354**	**1150**
	Signetics	**74HCT354**	**1158**
US74HCT356	**RCA**	**CD74HCT356**	**1150**
	Signetics	**74HCT356**	**1158**
US74HCT365	**RCA**	**CD74HCT365**	**1149**
	Signetics	**74HCT365**	**1158**
US74HCT366	**RCA**	**CD74HCT366**	**1149**
	Signetics	**74HCT366**	**1158**
US74HCT367	Nitron	NC74HCT367	
	RCA	**CD74HCT367**	**1149**
	Signetics	**74HCT367**	**1158**
US74HCT368	**RCA**	**CD74HCT368**	**1149**
	Signetics	**74HCT368**	**1158**
US74HCT373	CTI	74HCT373	
	GTEMicro	G74SC373	
	Hitachi	HD74HCT373	
	Micrel	MIC74HCT373	
	MicroTech	74HCTR373	
	Mitel	MD74HCT373	
	Motorola	MC74HCT373	
	National	MM74HCT373	
	Nitron	NC74HCT373	
	Plessey	MV74HCT373	
		MV74SC373	
	RCA	**CD74HCT373**	**1150**
	SPI	SP74HCT373	
	SGS	M74HCT373	
	Signetics	**74HCT373**	**1158**
	SSS	SS74HCT373	
	Supertex	SI74HCT373	
	TI	SN74HCT373	
	Toshiba	**TC74HCT373**	**1363**
	Zytrex	ZX74HCT373-2	
US74HCT374	CTI	74HCT374	
	GTEMicro	G74SC374	
US74HCT374	Hitachi	HD74HCT374	
	Micrel	MIC74HCT374	
	MicroTech	74HCTR374	
	Mitel	MD74HCT374	
	Motorola	MC74HCT374	
	National	MM74HCT374	
	Nitron	NC74HCT374	
	Plessey	MV74HCT374	
		MV74SC374	
	RCA	CD74HCT374	
	SPI	SP74HCT374	
	SGS	M74HCT374	
	Signetics	**74HCT374**	**1158**
	SSS	SS74HCT374	
	Supertex	SI74HCT374	
	TI	SN74HCT374	
	Toshiba	**TC74HCT374**	**1363**
	Zytrex	ZX74HCT374-2	
US74HCT377	RCA	CD74HCT377	
	Signetics	**74HCT377**	**1158**
US74HCT390	**RCA**	**CD74HCT390**	**1150**
	Signetics	**74HCT390**	**1158**
US74HCT393	Nitron	NC74HCT393	
	RCA	**CD74HCT393**	**1150**
	Signetics	PCF74HCT393	
US74HCT4002	**RCA**	**CD74HCT4002**	**1149**
	Signetics	**74HCT4002**	**1160**
US74HCT4017	**RCA**	**CD74HCT4017**	**1150**
	Signetics	**74HCT4017**	**1160**
US74HCT4020	**RCA**	**CD74HCT4020**	**1150**
	Signetics	**74HCT4020**	**1160**
US74HCT4024	**RCA**	**CD74HCT4024**	**1150**
	Signetics	**74HCT4024**	**1160**
US74HCT4040	**RCA**	**CD74HCT4040**	**1150**
	Signetics	**74HCT4040**	**1160**
US74HCT4049	RCA	CD74HCT4049	
	Signetics	74HCT4049	
US74HCT4050	RCA	CD74HCT4050	
	Signetics	74HCT4050	
US74HCT4051	**RCA**	**CD74HCT4051**	**1150**
	Signetics	**74HCT4051**	**1160**
US74HCT4052	**RCA**	**CD74HCT4052**	**1150**
	Signetics	**74HCT4052**	**1160**
US74HCT4053	**RCA**	**CD74HCT4053**	**1150**
	Signetics	**74HCT4053**	**1160**
US74HCT4060	**RCA**	**CD74HCT4060**	**1150**
	Signetics	**74HCT4060**	**1160**
US74HCT42	Nitron	NC74HCT42	
	RCA	**CD74HCT42**	**1150**
	Signetics	**74HCT42**	**1156**
US74HCT423	**RCA**	**CD74HCT423**	**1150**
	Signetics	**74HCT423**	**1158**
US74HCT4511	**RCA**	**CD74HCT4511**	**1150**
	Signetics	**74HCT4511**	**1161**
US74HCT4514	**RCA**	**CD74HCT4514**	**1150**
	Signetics	**74HCT4514**	**1161**
US74HCT4538	**RCA**	**CD74HCT4538**	**1150**
	Signetics	**74HCT4538**	**1161**
US74HCT4543	**RCA**	**CD74HCT4543**	**1150**
	Signetics	**74HCT4543**	**1161**
	Universal	USHCT4543	
US74HCT533	CTI	74HCT533	
	Hitachi	HD74HCT533	
	Micrel	MIC74HCT533	
	MicroTech	74HCTR533	
	Motorola	MC74HCT533	
	Plessey	MV74HCT533	
	RCA	**CD74HCT533**	**1150**
	Signetics	**74HCT533**	**1159**
	SSS	SS74HCT533	
	TI	SN74HCT533	
	Zytrex	ZX74HCT533	
US74HCT534	CTI	74HCT534	
	Hitachi	HD74HCT534	
	Micrel	MIC74HCT534	
	MicroTech	74HCTR534	
	Motorola	MC74HCT534	
	Plessey	MV74HCT534	
	RCA	CD74HCT534	
	Signetics	**74HCT534**	**1159**
	SSS	SS74HCT534	
	TI	SN74HCT534	
	Zytrex	ZX74HCT534-2	
US74HCT540	CTI	74HCT540	
	Hitachi	HD74HCT540	
	Micrel	MIC74HCT540	
	MicroTech	74HCTR540	
	Mitel	MD74HCT540	
	Motorola	MC74HCT540	
	Plessey	MV74HCT540	
	RCA	**CD74HCT540**	**1149**
	SPI	SP74HCT540	
US74HCT540	SGS	M74HCT540	
	Signetics	**74HCT540**	**1159**
	SSS	SS74HCT540	
	TI	SN74HCT540	
	Toshiba	**TC74HCT540**	**1363**
	Zytrex	ZX74HCT540-2	
US74HCT541	CTI	74HCT541	
	Hitachi	HD74HCT541	
	Micrel	MIC74HCT541	
	MicroTech	74HCTR541	
	Mitel	MD74HCT541	
	Motorola	MC74HCT541	
	Plessey	MV74HCT541	
	RCA	**CD74HCT541**	**1149**
	SPI	SP74HCT541	
	SGS	M74HCT541	
	Signetics	**74HCT541**	**1159**
	SSS	SS74HCT541	
	TI	SN74HCT541	
	Toshiba	**TC74HCT541**	**1363**
	Zytrex	ZX74HCT541-2	
US74HCT563	CTI	74HCT563	
	Hitachi	HD74HCT563	
	Micrel	MIC74HCT563	
	MicroTech	74HCTR563	
	Motorola	MC74HCT563	
	Plessey	MV74HCT563	
	RCA	**CD74HCT563**	**1150**
	SGS	M74HCT563	
	Signetics	**74HCT563**	**1159**
	SSS	SS74HCT563	
	TI	SN74HCT563	
	Toshiba	**TC74HCT563**	**1363**
US74HCT564	CTI	74HCT564	
	Hitachi	HD74HCT564	
	Micrel	MIC74HCT564	
	MicroTech	74HCTR564	
	Motorola	MC74HCT564	
	Plessey	MV74HCT564	
		MV74HCT573	
	RCA	CD74HCT564	
	SGS	M74HCT564	
	Signetics	**74HCT564**	**1159**
	SSS	SS74HCT564	
	TI	SN74HCT564	
	Toshiba	**TC74HCT564**	**1363**
US74HCT573	CTI	74HCT573	
	Hitachi	HD74HCT573	
	Micrel	MIC74HCT573	
	MicroTech	74HCTR573	
	Mitel	MD74HCT573	
	Motorola	MC74HCT573	
	RCA	**CD74HCT573**	**1150**
	SPI	SP74HCT573	
	SGS	M74HCT573	
	Signetics	**74HCT573**	**1159**
	SSS	SS74HCT573	
	TI	SN74HCT573	
	Toshiba	TC74HCT573	
US74HCT574	CTI	74HCT574	
	Hitachi	HD74HCT574	
	MicroTech	74HCTR574	
	Mitel	MD74HCT574	
	Motorola	MC74HCT574	
	Plessey	MV74HCT574	
	RCA	CD74HCT574	
	SPI	SP74HCT574	
	SGS	M74HCT574	
	Signetics	**74HCT574**	**1159**
	SSS	SS74HCT574	
	TI	SN74HCT574	
	Toshiba	**TC74HCT574**	**1363**
	Universal	US75HCT574	
US74HCT640	Hitachi	HD74HCT640	
	MicroTech	74HCTR640	
	Motorola	MC74HCT640	
	Nitron	NC74HCT640	
	RCA	**CD74HCT640**	**1149**
	SGS	M74HCT640	
	Signetics	**74HCT640**	**1159**
	SSS	SS74HCT640	
	TI	SN74HCT640	
	Toshiba	**TC74HCT640**	**1363**
	Zytrex	ZX74HCT640-2	
US74HCT643	Hitachi	HD74HCT643	
	MicroTech	74HCTR643	
	Motorola	MC74HCT643	
	RCA	**CD74HCT643**	**1149**
	SGS	M74HCT643	
	Signetics	**74HCT643**	**1159**
	TI	SN74HCT643	

(Continued)

◆ Discontinued

The manufacturers report their devices can be used as direct replacements.
Performance details often differ, so compare the specifications considering your requirements.

Universal Semiconductor, Inc. (Cont'd)

Manufacturer Device	Replacement Source	Device	IC Master Page
US74HCT643	**Toshiba**	**TC74HCT643**	**1363**
	Zytrex	ZX74HCT643-2	
US74HCT646	Hitachi	HD74HCT646	
	Nitron	NC74HCT646	
	RCA	**CD74HCT646**	**1149**
	SGS	M74HCT646	
	Signetics	**74HCT646**	**1159**
	TI	SN74HCT646	
	Toshiba	**TC74HCT646**	**1363**
US74HCT648	Hitachi	HD74HCT648	
	RCA	**CD74HCT648**	**1149**
	SGS	M74HCT648	
	Signetics	**74HCT648**	**1159**
	TI	SN74HCT648	
	Toshiba	**TC74HCT648**	**1363**
US74HCT688	**RCA**	**CD74HCT688**	**1150**
	Signetics	74HCT688	
US74HCT73	**RCA**	**CD74HCT73**	**1149**
	Signetics	**74HCT73**	**1156**
US74HCT74	Nitron	NC74HCT74	
	RCA	**CD74HCT74**	**1149**
	Signetics	**74HCT74**	**1156**
US74HCT75	**RCA**	**CD74HCT75**	**1150**
	Signetics	**74HCT75**	**1156**
US74HCT76	Signetics	74HCT76	
	TI	SN74HC76	
US74HCT85	**RCA**	**CD74HCT85**	**1150**
	Signetics	**74HCT85**	**1156**
US74HCT86	**RCA**	**CD74HCT86**	**1149**
	Signetics	**74HCT86**	**1156**
US75HCT574	CTI	74HCT574	
	Hitachi	HD74HCT574	
	MicroTech	74HCTR574	
	Mitel	MD74HCT574	
	Motorola	MC74HCT574	
	Plessey	MV74HCT574	
	RCA	CD74HCT574	
	SPI	SP74HCT574	
	SGS	M74HCT574	
	Signetics	**74HCT574**	**1159**
	SSS	SS74HCT574	
	TI	SN74HCT574	
	Toshiba	**TC74HCT574**	**1363**
	Universal	US74HCT574	
USHCT4543	**RCA**	**CD74HCT4543**	**1150**
	Signetics	**74HCT4543**	**1161**
	Universal	US74HCT4543	

VLSI Design Associates

Manufacturer Device	Replacement Source	Device	IC Master Page
V3829	SMC	FDC9229	

VLSI Technology

Manufacturer Device	Replacement Source	Device	IC Master Page
23131	AMD	AM92128	
	GI	R09128	
		SPR-128	
	GouldAMI	S23128	
		S3630A	
	GTEMicro	G53128	
	Hitachi	HN613128	
		HN613128P	
	Mitsubishi	M5M23128	
	Motorola	MCM63128	
	NCR	NCR23128	
	NEC	UPD23128	
		UPD23128A	
		UPD23128E	
		UPD23C128	
		UPD23C128E	
	RCA	**CDM53128**	**1673,1677**
	Rockwell	R23128	
	Signetics	23128	
	SSS	SCM23C128	
	Supertex	CM1310	
	Synertek	SY23128	
	Toshiba	TMM23128	
	UMC	UM23128	
	VTI	VT23128	
		VT23129	
		VT23129A	
		VT23130	
		VT23138	
23257	AMD	AM92256	
	Fujitsu	MB83256	
	GI	R09256	
	GouldAMI	S23256	
		S38256	
	GTEMicro	G53256	
	Hitachi	HN613256	
	Mitsubishi	M5M23256	
	Mostek	MK38000	
	Motorola	MCM63256	
		MCM65256	
	NCR	NCR23256	
		NCR23257	
	NEC	UPD23256	
		UPD23256A	
		UPD23C256E	
	OKI	**MSM38256**	**4733**
	Panasonic	MN23256	
		MN23257	
	RCA	CDM52356	
		CDM53256	**1673,1678**
	S-MOS	**SMM2326**	**4178**
		SMM6325	**4178**
		SMM6326	**4178**
	Signetics	23256	
		23256A	
	SSS	SCM23C256	
	Supertex	CM2560	
	Toshiba	**TMM23256**	**4263**
	UMC	UM23256	
	VTI	VT23256	
		VT23257	
FGC0500	Fairchild	VGC0500	
FGC0900	Fairchild	VGC0900	
FGC1200	Fairchild	VGC1200	
FGC1900	Fairchild	VGC1900	
FGC2400	Fairchild	VGC2400	
FGC3200	Fairchild	VGC3200	
FGC4000	Fairchild	VGC4000	
FGC6000	Fairchild	VGC6000	
VL4500A	**TI**	**TMS4500A**	**1328**
VT231024	**Motorola**	**MC54HC195**	**1128**
	National	MM54HC195	
	NEC	UPD23C1000	
	RCA	**CD54HC195**	**1149**
	Signetics	54HC195	
	TI	**SN54HC195**	**714**
VT23128	AMD	AM92128	
	GI	R09128	
		SPR-128	
	GouldAMI	S23128	
		S3630A	
	GTEMicro	G53128	
	Hitachi	HN613128	
		HN613128P	
	Mitsubishi	M5M23128	
	Motorola	MCM63128	
	NCR	NCR23128	
	NEC	UPD23128	
		UPD23128A	
		UPD23128E	
		UPD23C128	
		UPD23C128E	
	RCA	**CDM53128**	**1673,1677**
	Rockwell	R23128	
	Signetics	23128	
	SSS	SCM23C128	
	Supertex	CM1310	
	Synertek	SY23128	
	Toshiba	TMM23128	
	UMC	UM23128	
	VTI	23131	
		VT23129	
		VT23129A	
		VT23130	
		VT23138	
VT23129	AMD	AM92128	
	GI	R09128	
		SPR-128	
	GouldAMI	S23128	
		S3630A	
	GTEMicro	G53128	
	Hitachi	HN613128	
		HN613128P	
	Mitsubishi	M5M23128	
	Motorola	MCM63128	
	NCR	NCR23128	
	NEC	UPD23128	
		UPD23128A	
		UPD23128E	
		UPD23C128	
		UPD23C128E	
	RCA	**CDM53128**	**1673,1677**
	Rockwell	R23128	
	Signetics	23128	
	SSS	SCM23C128	
	Supertex	CM1310	
	Synertek	SY23128	
	Toshiba	TMM23128	
	UMC	UM23128	
	VTI	23131	
		VT23128	
		VT23129A	
		VT23130	
		VT23138	
VT23129A	AMD	AM92128	
	GI	R09128	
		SPR-128	
	GouldAMI	S23128	
		S3630A	
	GTEMicro	G53128	
	Hitachi	HN613128	
		HN613128P	
	Mitsubishi	M5M23128	
	Motorola	MCM63128	
	NCR	NCR23128	
	NEC	UPD23128	
		UPD23128A	
		UPD23128E	
		UPD23C128	
		UPD23C128E	
	RCA	**CDM53128**	**1673,1677**
	Rockwell	R23128	
	Signetics	23128	
	SSS	SCM23C128	
	Supertex	CM1310	
	Synertek	SY23128	
	Toshiba	TMM23128	
	UMC	UM23128	
	VTI	23131	
		VT23128	
		VT23129	
		VT23130	
		VT23138	
VT23130	AMD	AM92128	
	GI	R09128	
		SPR-128	
	GouldAMI	S23128	
		S3630A	
	GTEMicro	G53128	
	Hitachi	HN613128	
		HN613128P	
	Mitsubishi	M5M23128	
	Motorola	MCM63128	
	NCR	NCR23128	
	NEC	UPD23128	
		UPD23128A	
		UPD23128E	
		UPD23C128	
		UPD23C128E	
	RCA	**CDM53128**	**1673,1677**
	Rockwell	R23128	
	Signetics	23128	
	SSS	SCM23C128	
	Supertex	CM1310	
	Synertek	SY23128	
	Toshiba	TMM23128	
	UMC	UM23128	
	VTI	23131	
		VT23128	
		VT23129	
		VT23129A	
		VT23138	
VT23138	AMD	AM92128	
	GI	R09128	
		SPR-128	
	GouldAMI	S23128	
		S3630A	
	GTEMicro	G53128	
	Hitachi	HN613128	
		HN613128P	
	Mitsubishi	M5M23128	
	Motorola	MCM63128	
	NCR	NCR23128	
	NEC	UPD23128	
		UPD23128A	
		UPD23128E	
		UPD23C128	
		UPD23C128E	
	RCA	**CDM53128**	**1673,1677**
	Rockwell	R23128	
	Signetics	23128	
	SSS	SCM23C128	
	Supertex	CM1310	
	Synertek	SY23128	
	Toshiba	TMM23128	
	UMC	UM23128	
	VTI	23131	
		VT23128	
		VT23129	
		VT23129A	
		VT23130	
VT23256	AMD	AM92256	
	Fujitsu	MB83256	
	GI	R09256	
	GouldAMI	S23256	
		S38256	
	GTEMicro	G53256	
	Hitachi	HN613256	
	Mitsubishi	M5M23256	
	Mostek	MK38000	
	Motorola	MCM63256	
		MCM65256	
	NCR	NCR23256	
		NCR23257	
	NEC	UPD23256	
		UPD23256A	
		UPD23C256E	
	OKI	**MSM38256**	**4733**
	Panasonic	MN23256	
		MN23257	
	RCA	CDM52356	
		CDM53256	**1673,1678**
	S-MOS	**SMM2326**	**4178**
		SMM6325	**4178**
		SMM6326	**4178**
	Signetics	23256	
		23256A	
	SSS	SCM23C256	
	Supertex	CM2560	
	Toshiba	**TMM23256**	**4263**
	UMC	UM23256	
	VTI	23257	
		VT23257	
VT23257	AMD	AM92256	
	Fujitsu	MB83256	
	GI	R09256	
	GouldAMI	S23256	
		S38256	
	GTEMicro	G53256	
	Hitachi	HN613256	
	Mitsubishi	M5M23256	
	Mostek	MK38000	
	Motorola	MCM63256	
		MCM65256	
	NCR	NCR23256	
		NCR23257	
	NEC	UPD23256	
		UPD23256A	
		UPD23C256E	
	OKI	**MSM38256**	**4733**
	Panasonic	MN23256	
		MN23257	
	RCA	CDM52356	
		CDM53256	**1673,1678**
	S-MOS	**SMM2326**	**4178**
		SMM6325	**4178**
		SMM6326	**4178**
	Signetics	23256	
		23256A	
	SSS	SCM23C256	
	Supertex	CM2560	
	Toshiba	**TMM23256**	**4263**
	UMC	UM23256	
	VTI	23257	
		VT23256	
VT2332	AMD	AM9232	
	CSG	MPS2332	
	Fairchild	F3532	
	GI	R03-9332	
	GouldAMI	S2333	
		S68A332	
	GTEMicro	G2332	
	Hitachi	HN46332	
	Intech	IM7332	
	Intel	2332	
	Mitsubishi	M58333	
	Motorola	**MCM68A332**	**4120**
	National	NM52132	
	NCR	NCR2332	
	NEC	UPD2332A	
	Panasonic	MN2332	

(Continued)

◆ Discontinued

Bold face device numbers indicate manufacturers data is provided in the IC Master on the pages noted.

VLSI Technology (Cont'd)

Manufacturer Device	Replacement Source	Device	IC Master Page
VT2332	**RCA**	**CDM5333**	**1673,1677**
	Rockwell	R2332	
	SGS	M2332	
	Sharp	LH2332	
	Siemens	SA88332	
		SAB8332	
	Signetics	2332	
		2632A	
	SiliconG	SG3532	
	SSS	SCM23C32	
	SMC	ROM4732	
	Supertex	23SC32	
		CM3200	
	Synertek	SY2332	
	TI	TM2332	
		TMS2332	
		TMS4732	
	Toshiba	TMM2332	
		TMM333P	
VT2364	AMD	AM9264	
	GouldAMI	S2364	
		S68A364	
	Hitachi	HN48364	
	Motorola	**MCM68364**	**4120**
	NCR	NCR2364	
	OKI	**MSM3864**	**4733**
	Plessey	SL2364C	
	S-MOS	**SMM2364**	**4178**
	Sharp	LH2364A	
	Signetics	2364	
	Synertek	SYM2364	
	TI	TMS2364	
		TMS4764	
	Toshiba	TMM2364	
	Weitek	SC8164	
VT2365	AMD	AM9265	
	Fairchild	F3568	
		F3569	
		F3570	
	GI	RO3-9365	
		RO9864	
	GouldAMI	S2364	
		S6364	
	GTEMicro	G5364	
	Hitachi	HN61364	
	Intel	2364A	
	Mitsubishi	M5M2364	
		M5M2365	
		M5M23C64	
	Mostek	MK37000	
	Motorola	MCM68369	
		MCM68370	
	National	MM52264	
		NM52264	
	OKI	**MSM3864**	**4733**
	Panasonic	MN2364	
		MN4864	
	RCA	**CDM5365**	**1673,1677**
	Rockwell	R2364B	
	SSS	SCM23C65	
	Supertex	23SC64	
		23SC64/A	
		CM6400	
	Synertek	SY2365/A	
	TI	TMS2364	
		TMS4764	
	Toshiba	TMM2365	
	UMC	UM2366	
VT2366	National	NMC2564	
VT27C256	AMD	AM27256	
	Fujitsu	MBM27256	
		MBM27C256	
	GI	RO9256	
	Hitachi	HM4827256	
		HN27256	
		HN27C256	**4037**
	Intel	27256	
		27C256	**4079**
	Mitsubishi	M5L27256	
		MSL27256	
	Motorola	MCM67256	
	National	NMC27C256	
	NEC	MPD27256	
		UPD27256	
		UPD27C256	
		UPD27C256A	
	SEEQ	27256	
		27C256	
	SGS	M27256	
	SSS	SCM27C128	
	Toshiba	TC57256	
		TMM27256	
		TMM27C256	
VT64KD1	Fairchild	F1600	
	Fujitsu	MB8171	
	Hitachi	HM6287	
	Inmos	IMS1600	
	IDT	IDT7M164	
	Motorola	MCM6164	
	NEC	μPD4361	
	Toshiba	TC5561	

Weitek Corporation

Manufacturer Device	Replacement Source	Device	IC Master Page
SC8164	AMD	AM9264	
	GouldAMI	S2364	
		S68A364	
	Hitachi	HN48364	
	Motorola	**MCM68364**	**4120**
	NCR	NCR2364	
	OKI	**MSM3864**	**4733**
	Plessey	SL2364C	
	S-MOS	**SMM2364**	**4178**
	Sharp	LH2364A	
	Signetics	2364	
	Synertek	SYM2364	
	TI	TMS2364	
		TMS4764	
	Toshiba	TMM2364	
	VTI	VT2364	
WTL1010	AMD	AM29510	
		AMD29510	
		AMD29L510	
	AD	ADSP1010	
		ADSP1010A	
	Cypress	CY7C510	
	IDT	**IDT7210**	**1084,1088**
	LogicDev	LMA1010	
	MicroPwr	**MP1010**	**688**
	TI	74HCT9510	
		SN74HCT9510	
	TRW-LSI	TDC1010	
		TDC2010	
		TMC2010	
		TMC2110	
	Weitek	WTL2010	
		WTL2044	
		WTL2245	
WTL1016	AMD	AM29516	
		AM29C516	
	AD	ADSP1016	
	Cypress	CY7C516	
	IDT	**IDT7216**	**1086,1088**
	LogicDev	LMU16	
	TRW-LSI	MPY016H	
		MPY016K	
		MPY16HJ	
	Weitek	WTL1516	
		WTL2516	
WTL1516	AMD	AM29516	
		AM29C516	
	AD	ADSP1016	
	Cypress	CY7C516	
	IDT	**IDT7216**	**1086,1088**
	LogicDev	LMU16	
	TRW-LSI	MPY016H	
		MPY016K	
		MPY16HJ	
	Weitek	WTL1016	
		WTL2516	
WTL1517	AMD	AM29517	
		AM29C517	
	Cypress	CY7C517	
	IDT	**IDT7217**	**1086,1088**
	LogicDev	LMU17	
	Weitek	WTL2517	
		WTL9517	
WTL2010	AMD	AM29510	
		AMD29510	
		AMD29L510	
	AD	ADSP1010	
		ADSP1010A	
	Cypress	CY7C510	
	IDT	**IDT7210**	**1084,1088**
	LogicDev	LMA1010	
	MicroPwr	**MP1010**	**688**
	TI	74HCT9510	
		SN74HCT9510	
	TRW-LSI	TDC1010	
		TDC2010	
		TMC2010	
		TMC2110	
	Weitek	WTL1010	
		WTL2044	
		WTL2245	
WTL2044	AMD	AM29510	
		AMD29510	
		AMD29L510	
	AD	ADSP1010	
		ADSP1010A	
	Cypress	CY7C510	
	IDT	**IDT7210**	**1084,1088**
	LogicDev	LMA1010	
	MicroPwr	**MP1010**	**688**
	TI	74HCT9510	
		SN74HCT9510	
	TRW-LSI	TDC1010	
		TDC2010	
		TMC2010	
		TMC2110	
	Weitek	WTL1010	
		WTL2010	
		WTL2245	
WTL2245	AMD	AM29510	
		AMD29510	
		AMD29L510	
	AD	ADSP1010	
		ADSP1010A	
	Cypress	CY7C510	
	IDT	**IDT7210**	**1084,1088**
	LogicDev	LMA1010	
	MicroPwr	**MP1010**	**688**
	TI	74HCT9510	
		SN74HCT9510	
	TRW-LSI	TDC1010	
		TDC2010	
		TMC2010	
		TMC2110	
	Weitek	WTL1010	
		WTL2010	
		WTL2044	
WTL2516	AMD	AM29516	
		AM29C516	
	AD	ADSP1016	
	Cypress	CY7C516	
	IDT	**IDT7216**	**1086,1088**
	LogicDev	LMU16	
	TRW-LSI	MPY016H	
		MPY016K	
		MPY16HJ	
	Weitek	WTL1016	
		WTL1516	
WTL2517	AMD	AM29517	
		AM29C517	
	Cypress	CY7C517	
	IDT	**IDT7217**	**1086,1088**
	LogicDev	LMU17	
	Weitek	WTL1517	
		WTL9517	
WTL9516	AD	ADSP1016	
	IDT	**IDT7216**	**1086,1088**
	LogicDev	LMU16	
	Weitek	WTL1516	
WTL9517	AMD	AM29517	
		AM29C517	
	Cypress	CY7C517	
	IDT	**IDT7217**	**1086,1088**
	LogicDev	LMU17	
	Weitek	WTL1517	
		WTL2517	

Western Design Center

Manufacturer Device	Replacement Source	Device	IC Master Page
65C802	**GTEMicro**	**G65SC802**	**1617**
		G65SC816	

Western Digital

Manufacturer Device	Replacement Source	Device	IC Master Page
BR1941	SMC	COM5016	
FD1771	National	INS1771	
FD1792	SMC	FDC1792	
FD1794	SMC	FDC1794	
FD1795	Siemens	SAB1795	
	SMC	9795	
		FDC1795	
FD1797	Siemens	SAB1797	
	SMC	9797	
		FDC1797	
UC1671	SMC	COM1671	
WD1943	GI	AY5-8116	
	SMC	COM8116	
WD2501	TI	TMS2501	
WD2511	TI	TMS2511	
WD2791	TI	TMS2791	
WD2793	TI	TMS2793	
WD2795	TI	TMS2795	
WD2797	TI	TMS2797	
WD5386	NCR	MCR8386	
WD9650	National	9650	
	TI	TMS9650	
WD9914A	**TI**	**TMS9914A**	**729**

Xicor

Manufacturer Device	Replacement Source	Device	IC Master Page
X2001	Mostek	MK4701	
X2004	Intel	2004	
	NCR	**NCR52004**	**4128,4130**
◆X2201	GI	ER5901	
X2210	**NCR**	**NCR52210**	**4128,4130**
X2212	**NCR**	**NCR52212**	**4128,4130**
◆X2402	GI	PCD8582	
◆X2443	National	NMC494	
X2444	National	COP494	
		NMC9306	
	Sierra	SC22001	
X2616	Intel	82S191	
	Motorola	**MCM76161**	**4124**
	Raytheon	**29681A**	**4134**
X2804A	GI	ER5904	
◆X2816A	EXEL	XL2816A	
	Intel	2816A	
	Rockwell	R5516A/2816A	
	SEEQ	2816A	
	Samsung	**KM2816A**	**4140**
X2864A	AMD	AM2864B	
		AM9864	
	EXEL	XL2864A	
		XLS2864A	
	Fujitsu	UBM28C64	
	Hitachi	HN58064	
	SEEQ	2864	

Zilog

Manufacturer Device	Replacement Source	Device	IC Master Page
70108	NEC	μPD70108-51-8	
70116	NEC	μPD70116-51-8	
Z7220A	NEC	μPD7220A	
Z765A	NEC	UPD72065	
		UPD7654A-2	
	SMC	FDC765A	
Z8	SGS	Z8	
Z80-CTC	Mostek	MK3882	
	SGS	Z80-CTC	
		Z8430	
	Sharp	LH-0082	
	Zilog	Z8430	
Z80-DART	SGS	Z80-DART	
		Z8470	
	Zilog	Z8470	
Z80-DMA	Mostek	MK3883	
	SGS	Z80-DMA	
		Z8410	
	Sharp	LH-0083	
	Zilog	Z8410	
Z80-PIO	Mostek	MK3881	
	SGS	Z80-PIO	
		Z8420	
	Sharp	LH-0081	
	Zilog	Z8420	
Z80-SIO	Mostek	MK3884	
		MK3885	
		MK3887	
	SGS	Z80-SIO	
		Z8440	
		Z8441	
		Z8442	
	Sharp	LH-0084	
	Zilog	Z8440	
		Z8441	
		Z8442	
Z8001	AMD	Z8001	
	SGS	Z8001	
Z8002	AMD	Z8002	
	SGS	Z8002	
Z8010	AMD	Z8010	
	SGS	Z8010	
Z8016	AMD	Z8016	
Z8030	AMD	Z8030	
	SGS	Z8030	
Z8031	SGS	Z8031	

◆ Discontinued

The manufacturers report their devices can be used as direct replacements.
Performance details often differ, so compare the specifications considering your requirements.

Zilog (Cont'd)

Manufacturer Device	Replacement Source	Device	IC Master Page
Z8036	AMD	Z8036	
	SGS	Z8036	
Z8038	AMD	Z8038	
	SGS	Z8038	
Z8060	AMD	Z8060	
	SGS	Z8060	
Z8068	AMD	AM9518	
		Z8068	
Z8090	SGS	Z8090	
Z80L-CPU	Zilog	Z8300	
Z80L-CTC	Zilog	Z8330	
Z80L-PIO	Zilog	Z8320	
Z80L-SIO	Zilog	Z8340	
		Z8341	
		Z8342	
Z83	Zilog	Z8403	
Z8300	Zilog	Z80L-CPU	
Z8320	Zilog	Z80L-PIO	
Z8330	Zilog	Z80L-CTC	
Z8340	Zilog	Z80L-SIO	
		Z8341	
		Z8342	
Z8341	Zilog	Z80L-SIO	
		Z8340	
		Z8342	
Z8342	Zilog	Z80L-SIO	
		Z8340	
		Z8341	
Z8400	SGS	Z8400	
		Z84C00	
	Sharp	LH-0080	
	Toshiba	**TMPZ84C00**	1750
	Zilog	**Z84C00**	1773
Z8403	Zilog	Z83	
Z8410	Mostek	MK3883	
	SGS	Z80-DMA	
		Z8410	
	Sharp	LH-0083	
	Zilog	Z80-DMA	
Z8420	Mostek	MK3881	
	SGS	Z80-PIO	
		Z8420	
	Sharp	LH-0081	
	Zilog	Z80-PIO	
Z8430	Mostek	MK3882	
	SGS	Z80-CTC	
		Z8430	
	Sharp	LH-0082	
	Zilog	Z80-CTC	
Z8440	Mostek	MK3884	
		MK3885	
		MK3887	
	SGS	Z80-SIO	
		Z8440	
		Z8441	
		Z8442	
	Sharp	LH-0084	
	Zilog	Z80-SIO	
		Z8441	
		Z8442	
Z8441	Mostek	MK3884	
		MK3885	
		MK3887	
	SGS	Z80-SIO	
		Z8440	
		Z8441	
		Z8442	
	Sharp	LH-0084	
	Zilog	Z80-SIO	
		Z8440	
		Z8442	
Z8442	Mostek	MK3884	
		MK3885	
		MK3887	
	SGS	Z80-SIO	
		Z8440	
		Z8441	
		Z8442	
	Sharp	LH-0084	
	Zilog	Z80-SIO	
		Z8440	
		Z8441	
Z8449	SGS	Z8449	
Z8470	SGS	Z80-DART	
		Z8470	
	Zilog	Z80-DART	
Z84C00	SGS	Z8400	
		Z84C00	
	Sharp	LH-0080	
			(Continued)
Z84C00	**Toshiba**	**TMPZ84C00**	1750
	Zilog	Z8400	
Z84C10	SGS	Z84C10	
	Toshiba	**TMPZ84C10**	1750
	Zilog	Z8410	
Z84C20	SGS	Z84C20	
	Toshiba	**TMPZ84C20**	1750
Z84C30	SGS	Z84C30	
	Toshiba	**TMPZ84C30**	1750
Z84C40	SGS	Z284C40	
	Toshiba	**TMPZ84C40**	1750
	Zilog	Z8440	
Z84C41	SGS	Z84C41	
	Toshiba	**TMPZ84C41**	1750
Z84C42	SGS	Z84C42	
	Toshiba	**TMPZ84C42**	1750
Z8516	AMD	AM9516	
Z8530	AMD	Z8530	
	SGS	Z8530	
Z8531	SGS	Z8531	
Z8536	AMD	Z8536	
	SGS	Z8536	
Z8538	SGS	Z8538	
Z8601	SGS	Z8601	
	Sharp	Z8601	
Z8611	SGS	Z8611	
	Sharp	Z8611	
Z8612	SGS	Z8612	
Z8671	SGS	Z8671	
Z8681	SGS	Z8681	
	Sharp	Z8681	
Z8682	SGS	Z8682	

Zytrex Corp.

Manufacturer Device	Replacement Source	Device	IC Master Page
ZX-CAL-14H4	MMI	HAL14H4C	
	SPI	SP814H4	
ZX-CAL10H8	MMI	HAL10H8C	
	SPI	SP810H8	
ZX-CAL10L8	MMI	HAL10L8C	
	SPI	SP810L8	
ZX-CAL12H6C	MMI	HAL12H6C	
	SPI	SP812H6	
ZX-CAL12L6	MMI	HAL12L6C	
	SPI	SP812L6	
ZX-CAL14L4	MMI	HAL14L4C	
	SPI	SP814L4	
ZX74HC240	Hitachi	HD74HC240	
	Mitel	MD74HC240	
	Motorola	**MC74HC240**	1124
	National	MM74HC240	
	Nitron	NC74HC240	
	RCA	**CD74HC240**	1149
	SPI	SP74HC240	
	SGS	M74HC240	
	Signetics	**74HC240**	1157
	SSS	SS74HC240	
	Supertex	SI74HC240	
	TI	SN74HC240	
	Toshiba	**TC40H240**	1363
	Universal	US74HC240	
ZX74HC241	Hitachi	HD74HC241	
	Mitel	MD74HC241	
	Motorola	**MC74HC241**	1124
	National	MM74HC241	
	Nitron	NC74HC241	
	RCA	**CD74HC241**	1149
	SPI	SP74HC241	
	SGS	M74HC241	
	Signetics	**74HC241**	1157
	SSS	SS74HC241	
	Supertex	SI74HC241	
	TI	SN74HC241	
	Universal	US74HC240	
ZX74HC244	Hitachi	HD74HC244	
	Mitel	MD74HC244	
	Motorola	**MC74HC244**	1124
	National	MM74HC244	
	Nitron	NC74HC244	
	RCA	**CD74HC244**	1149
	SPI	SP74HC244	
	SGS	M74HC244	
	Signetics	**74HC244**	1158
	SSS	SS74HC244	
	Supertex	SI74HC244	
	TI	SN74HC244	
	Universal	US74HC244	
ZX74HC373	Hitachi	HD74HC373	
	Mitel	MD74HC373	
	Motorola	**MC74HC373**	1126
	National	MM74HC373	
	Nitron	NC74HC373	
			(Continued)
ZX74HC373	**RCA**	**CD74HC373**	1150
	SPI	SP74HC373	
	SGS	M74HC373	
	Signetics	**74HC373**	1158
	SSS	SS74HC373	
	Supertex	SI74HC373	
	TI	SN74HC373	
	Universal	US74HC373	
ZX74HC374	Hitachi	HD74HC374	
	Mitel	MD74HC374	
	Motorola	**MC74HC374**	1126
	National	MM74HC374	
	Nitron	NC74HC374	
	RCA	**CD74HC374**	1149
	SPI	SP74HC374	
	SGS	M74HC374	
	Signetics	**74HC374**	1158
	SSS	SS74HC374	
	TI	SN74HC374	
	Universal	US74HC374	
ZX74HCT138-2	CTI	74HCT138	
	IDT	IDT74HCT138	
	Mitel	MD74HCT138	
	Motorola	MC74HCT138	
	Nitron	NC74HCT138	
	Plessey	MV74HCT138	
	RCA	**CD74HCT138**	1150
	SPI	SP74HCT138	
	SGS	M74HCT138	
	Signetics	**74HCT138**	1157
	SSS	SS74HCT138	
	TI	SN74HCT138	
	Toshiba	**TC74HCT138**	1363
ZX74HCT139-2	IDT	IDT74HCT139	
	Mitel	MD74HCT139	
	Nitron	NC74HCT139	
	Plessey	MV74HCT139	
	SPI	SP74HCT139	
	Signetics	**74HCT139**	1157
	Universal	US74HCT139	
ZX74HCT160-2	National	MM74HCT160	
	RCA	**CD74HCT160**	1150
	Signetics	**74HCT160**	1157
	Universal	US74HCT160	
ZX74HCT161-2	**RCA**	**CD74HCT161**	1150
	Signetics	**74HCT161**	1157
	Universal	US74HCT161	
ZX74HCT162-2	**RCA**	**CD74HCT162**	1150
	Signetics	**74HCT162**	1157
	Universal	US74HCT162	
ZX74HCT163-2	**RCA**	**CD74HCT163**	1150
	Signetics	**74HCT163**	1157
	Universal	US74HCT163	
ZX74HCT239	Plessey	MV74HCT239	
ZX74HCT240-2	CTI	74HCT240	
	Hitachi	HD74HCT240	
	Micrel	MIC74HCT240	
	MicroTech	74HCTR240	
	Mitel	MD74HCT240	
	Motorola	MC74HCT240	
	National	MM74HCT240	
	Nitron	NC74HCT240	
	Plessey	MV74HCT240	
	RCA	**CD74HCT240**	1149
	SPI	SP74HCT240	
	SGS	M74HCT240	
	Signetics	**74HCT240**	1157
	SSS	SS74HCT240	
	Supertex	SI74HCT240	
	TI	SN74HCT240	
	Toshiba	**TC74HCT240**	1363
	Universal	US74HCT240	
ZX74HCT241-2	CTI	74HCT241	
	Hitachi	HD74HCT241	
	Micrel	MIC74HCT241	
	MicroTech	74HCTR241	
	Mitel	MD74HCT241	
	Motorola	MC74HCT241	
	National	MM74HCT241	
	Nitron	NC74HCT241	
	Plessey	MV74HCT241	
	RCA	**CD74HCT241**	1149
	SPI	SP74HCT241	
	SGS	M74HCT241	
	Signetics	**74HCT241**	1157
	SSS	SS74HCT241	
	Supertex	SI74HCT241	
	TI	SN74HCT241	
	Toshiba	**TC74HCT241**	1363
	Universal	US74HCT241	
ZX74HCT244-2	CTI	74HCT244	
	Hitachi	HD74HCT244	
			(Continued)
ZX74HCT244-2	Micrel	MIC74HCT244	
	MicroTech	74HCTR244	
	Mitel	MD74HCT244	
	Motorola	MC74HCT244	
	National	MM74HCT244	
	Nitron	NC74HCT244	
	Plessey	MV74HCT244	
	RCA	**CD74HCT244**	1149
	SPI	SP74HCT244	
	SGS	M74HCT244	
	Signetics	**74HCT244**	1158
	SSS	SS74HCT244	
	Supertex	SI74HCT244	
	TI	SN74HCT244	
	Toshiba	**TC74HCT244**	1363
	Universal	US74HCT244	
ZX74HCT373-2	CTI	74HCT373	
	GTEMicro	G74SC373	
	Hitachi	HD74HCT373	
	Micrel	MIC74HCT373	
	MicroTech	74HCTR373	
	Mitel	MD74HCT373	
	Motorola	MC74HCT373	
	National	MM74HCT373	
	Nitron	NC74HCT373	
	Plessey	MV74HCT373	
		MV74SC373	
	RCA	**CD74HCT373**	1150
	SPI	SP74HCT373	
	SGS	M74HCT373	
	Signetics	**74HCT373**	1158
	SSS	SS74HCT373	
	Supertex	SI74HCT373	
	TI	SN74HCT373	
	Toshiba	**TC74HCT373**	1363
	Universal	US74HCT373	
ZX74HCT374-2	CTI	74HCT374	
	GTEMicro	G74SC374	
	Hitachi	HD74HCT374	
	Micrel	MIC74HCT374	
	MicroTech	74HCTR374	
	Mitel	MD74HCT374	
	Motorola	MC74HCT374	
	National	MM74HCT374	
	Nitron	NC74HCT374	
	Plessey	MV74HCT374	
		MV74SC374	
	RCA	CD74HCT374	
	SPI	SP74HCT374	
	SGS	M74HCT374	
	Signetics	**74HCT374**	1158
	SSS	SS74HCT374	
	Supertex	SI74HCT374	
	TI	SN74HCT374	
	Toshiba	**TC74HCT374**	1363
	Universal	US74HCT374	
ZX74HCT533	CTI	74HCT533	
	Hitachi	HD74HCT533	
	Micrel	MIC74HCT533	
	MicroTech	74HCTR533	
	Motorola	MC74HCT533	
	Plessey	MV74HCT533	
	RCA	**CD74HCT533**	1150
	Signetics	**74HCT533**	1159
	SSS	SS74HCT533	
	TI	SN74HCT533	
	Universal	US74HCT533	
ZX74HCT534-2	CTI	74HCT534	
	Hitachi	HD74HCT534	
	Micrel	MIC74HCT534	
	MicroTech	74HCTR534	
	Motorola	MC74HCT534	
	Plessey	MV74HCT534	
	RCA	CD74HCT534	
	Signetics	**74HCT534**	1159
	SSS	SS74HCT534	
	TI	SN74HCT534	
	Universal	US74HCT534	
ZX74HCT540-2	CTI	74HCT540	
	Hitachi	HD74HCT540	
	Micrel	MIC74HCT540	
	MicroTech	74HCTR540	
	Mitel	MD74HCT540	
	Motorola	MC74HCT540	
	Plessey	MV74HCT540	
	RCA	**CD74HCT540**	1149
	SPI	SP74HCT540	
	SGS	M74HCT540	
	Signetics	**74HCT540**	1159
	SSS	SS74HCT540	
	TI	SN74HCT540	
			(Continued)

◆ Discontinued

Bold face device numbers indicate manufacturers data is provided in the IC Master on the pages noted.

MANUFACTURERS AND DISTRIBUTORS/ REPRESENTATIVES DIRECTORY

The Manufacturers and Distributors/Representatives Directory is a comprehensive telephone directory of the entire IC industry. It places at your fingertips the names and phone numbers you need to know. It includes manufacturers, international sales offices, representatives and distributors; for manufacturers with data pages, it also includes domestic sales offices, representatives and distributors. The manufacturers' listings tell you where and whom to call to obtain technical and ordering information. It enables you to ask for the right person or phone extension. It gives you the terminology understood by the individual company's switchboard operators, e.g., in some companies you should ask for sales, in others, customer service. This directory will reduce frustration and save you time.

Acco Babcock

Acco Babcock, Inc.
Bailes Road, Box 460
Frederick, Maryland 21701
301-662-4181
TELEX: 89-3431

ACASI

American Computer Automated Systems, Inc.
P.O. Box 20127
San Jose, California 95160
408-997-3333

Acotech

Acotech
713 Santa Cruz Ave., Ste. 2
Menlo Park, California 94025
415-325-7999

Action Computer Enterprise

Action Computer Enterprise Inc.
430 North Halstead Street
Pasadena, California 91107
818-351-5451
TWX: 910-588-1201

Adaptec Inc.

Adaptec Inc.
580 Cottonwood Dr.
Milpitas, California 95035
408-946-8600
TWX: 910-338-0060

Advanced Digital

Advanced Digital Corporation
5432 Production Drive
Huntington Beach, California 92649
714-891-4004

Advanced Engineering Solutions

Advanced Engineering Solutions, Inc.
75 Manhattan Dr., No. 302
Boulder, Colorado 80303
303-499-2910

Specific product information:
Jerry Tuneberg

Advanced Micro Devices

Advanced Micro Devices, Inc.
901 Thompson Place
Sunnyvale, California 94088
408-732-2400
TELEX: 34-6306

Specific product information:

Bipolar Microprocessors	Leon Torban
Bipolar Memory	Dave Wood
Logic (MSI)	Chris King
Hi-Rel Logic and Interface	Ron Marfil
Microcomputer Board Information	Advanced Micro Devices, 3340 Scott Blvd., Santa Clara, CA 95051, 408-988-7777, Telex: 171-142
MOS Microprocessors and Support Circuits	Ed Huber
MOS Serial Memory, Mask-programmable ROMs and E-PROMs	David Starr
MOS-RAMs	Bill DeMatteis (DRAM), Dick Bruneau (SRAM)
Computer Interface	Gary Conner

Application engineering:

Communications	Russ Apfel
Microprocessors	Bill Harmon
Memory and General Purpose Logic	Kris Rallapalli

Literature:
Literature Dept.

Price and delivery:
Contact AMD Sales
Office, Rep. or Dist.

Follow-up an order:
Customer Service Dept.

All other information:
Corporate Communications Dept.

Sales Office & Representatives

Intl **Australia, Sydney**
R & D Elctrns., TEL: (61) 439-5488
Intl **Australia, Victoria**
R & D Elctrns., TEL: (03) 288-8232/62
Intl **Austria, Voesendorf-Wien**
Kontron Ges.m.b.H., TEL: 040-68 29 50
Intl **Belgium, Bruxelles**
AMD, TEL: (02) 771 9993
Intl **Belgium, Bruxelles**
MCAB, TEL: 02-375-29-01
Intl **Belgium, Ougree**
MCA Tronix, TEL: (041) 362780/362795
Intl **Denmark, Copenhagen**
Advanced Elctrn. of Denmark ApS., TEL: (01) 19 44 33
Intl **Finland, Kerava**
Telercas Oy, TEL: 358-0-248055
Intl **France, Buc**
YREL, TEL: 03-956-81-42
Intl **France, Gentilly**
RTF, TEL: 01-664-11-01
Intl **France, Le Chesnay**
A2M, TEL: (03) 954.91.13
Intl **France, Nantes**
Sonepar Electronique Quest, TEL: 40-20-4-81
Intl **France, Rungis Cedex**
AMD, S.A., TEL: (01) 687-36-66
Intl **Germany, Burgwedel**
EBV-Elektronik Vertriebs GmbH, TEL: (05139) 50 38
Intl **Germany, Dusseldorf**
EBV-Elektronik Vertriebs GmbH, TEL: (0211) 8 48 46/7
Intl **Germany, Dusseldorf**
Kontron Halbleiter GmbH, TEL: 0211-7-33-14-53
Intl **Germany, Eching b. Munchen**
Kontron Halbleiter GmbH, TEL: 089-31-901-377
Intl **Germany, Eching b. Munchen**
Kontron Messtechnik GmbH, TEL: 089-31-90-11
Intl **Germany, Filderstadt**
AMD, TEL: (07158) 30-60
Intl **Germany, Frankfurt-Main**
Kontron Halbleiter GmbH, TEL: 0611-63-60-61
Intl **Germany, Frankfurt/Main**
EBV-Elektronik Vertriebs GmbH, TEL: 0611-78-50-37
Intl **Germany, Hamburg**
Kontron Halbleiter GmbH, TEL: 040-68-29-50
Intl **Germany, Hannover**
Kontron Halbleiter GmbH, TEL: 05-11-83-90-51
Intl **Germany, Muenchen**
AMD, TEL: (089) 40 19 76
Intl **Germany, Muenchen**
Astronic-Cosmos, TEL: (089) 30-90-31
Intl **Germany, Muenchen**
EBV-Elektronik Vertriebs GmbH, TEL: (089) 6 11 05-1
Intl **Germany, Nurnberg**
Kontron Halbleiter GmbH, TEL: 0911-53-33-06
Intl **Germany, Quickborn**
Nordelektronik Vertriebs GmbH, TEL: (04106) 7-20-72
Intl **Germany, Stuttgart**
EBV-Elektronik Vertriebs GmbH, TEL: (0711) 24 74 81/83
Intl **Germany, Stuttgart**
Kontron Halbleiter GmbH, TEL: 0711-81-4621
Intl **Germany, Winsen/Aller**
AMD, GmbH, TEL: (05143) 53 62
Intl **Holland, Oss**
Archobel BV, TEL: (04120) 30335
Intl **Hong Kong, Kowloon**
Tektron Elctrns., TEL: 3-856-199
Intl **Hong Kong, Tsimshatsui, Kowloon**
AMD, TEL: 852-3 695377
Intl **India, Bangalore**
SRI RAM Assoc.
Intl **Ireland, Malalude**
New England Sales Ltd., TEL: 01-450-635
Intl **Israel, Tel Aviv**
Talviton Elctrns., TEL: (03) 444572
Intl **Italy, Bologna**
Eledra 3S S.p.A., TEL: 051-307781/340999
Intl **Italy, Bologna**
Lasi Elettronica S.p.A., TEL: 051-353815
Intl **Italy, Milano**
Eledra 3S S.p.A., TEL: 02-349751
Intl **Italy, Milano**
Kontron, S.p.A., TEL: 02-50721
Intl **Italy, Milano**
Lasi Elettronica S.p.A., TEL: 02-6120441
Intl **Italy, Padova**
Eledra 3S S.p.A., TEL: 049-655488/655749
Intl **Italy, Padova**
Kontron, S.p.A., TEL: 049-754717/850377
Intl **Italy, Roma**
Eledra 3S S.p.A., TEL: 06-812-7324/7290
Intl **Italy, Roma**
Kontron, S.p.A., TEL: 06-423250/425327
Intl **Italy, Roma**
Lasi Elettronica S.p.A., TEL: 06-5405301
Intl **Italy, Segrate**
AMD, S.r.L., TEL: (02) 215 4913-4-5
Intl **Italy, Torino**
Eledra 3S S.p.A., TEL: 011-309-9111/2/3
Intl **Italy, Torino**
Kontron, S.p.A., TEL: 011-746191/7495253
Intl **Italy, Torino**
Lasi Elettronica S.p.A., TEL: 011-359277
Intl **Japan, Kanagawa**
Tokyo Electron Ltd., TEL: 045-471-8811
Intl **Japan, Nagoya-shi Achi**
Tokyo Electron Ltd., TEL: 052-561-0361
Intl **Japan, Narashi**
Danichi Contronics
Intl **Japan, Osaka**
Tokyo Electron Ltd., TEL: 06-305-2870
Intl **Japan, Saitama**
Tokyo Electron Ltd., TEL: 0485-25-1421
Intl **Japan, Tokyo**
AMD, K.K., TEL: (03) 329-2751
Intl **Japan, Tokyo**
Asahi Glass Company, Ltd., TEL: 03-218-5690
Intl **Japan, Tokyo**
Danichi Contronics, TEL: (03) 811-9205
Intl **Japan, Tokyo**
Hamilton/Avnet Electronic Japan Ltd., TEL: 03-662-9911

Advanced Micro Devices (Cont)

Intl **Japan, Tokyo**
ISI Ltd., TEL: (03) 264-3301
Intl **Japan, Tokyo**
Kantmatsu Denshi K.K.
Intl **Japan, Tokyo**
Microtek, Inc., TEL: (03) 363-2317
Intl **Japan, Tokyo**
Tokyo Electron Ltd., TEL: 03-343-4411
Intl **Japan, Tokyo**
Tokyo Electron Ltd., TEL: 03-251-0048
Intl **Japan, Tokyo**
Tokyo Electron Ltd., TEL: 0425-84-3711
Intl **Korea, Seoul**
Dunksung Trading Co., TEL: (02)-856-9764
Intl **New Zealand, Auckland**
G.T.S. Engrg., Ltd., TEL: (AUCK) 546-745
Intl **Norway, Stroemmen**
A/S Kjell Bakke, TEL: (02) 83-02-20
Intl **Singapore**
Impact Sound (Pte.) Ltd., TEL: 282-4288/9
Intl **South Africa, Pinegowrie**
South Continental Devices (Pty.) Ltd., TEL: (011) 789-2400
Intl **Spain, Barcelona**
Sagitron, S.A., TEL: 03-212-65-83
Intl **Spain, Madrid**
Sagitron, SA, TEL: (01) 402-60-85
Intl **Sweden, Sundyberg**
AMD AB, TEL: (08) 98-12-35
Intl **Sweden, Vallingby**
Stiab Marketing, TEL: 08-37-28-80
Intl **Sweden, Vallingby**
Svensk Teleindustri AB, TEL: (08) 38-03-20
Intl **Switzerland, Zurich**
Amera Electronics AG, TEL: 01-57-11-12
Intl **Switzerland, Zurich**
Kontron Electronic, TEL: 01-62-82-82
Intl **Taiwan, Taipei**
Multitech Intl. Corp., TEL: (2)-769-1225
Intl **United Kingdom, Berkshire**
Kudos Electronics, Ltd., TEL: 0734-794515
Intl **United Kingdom, Buckinghamshire**
Dage Eurosem, Ltd., TEL: 0296-32881
Intl **United Kingdom, Derby**
Quardon Elctrns., TEL: (0332) 32651
Intl **United Kingdom, Kent**
Candy Elctrn. Comps., TEL: (0622) 7077415
Intl **United Kingdom, Middlesex**
Hawke-Cramer Comps. Ltd., TEL: (01) 979-7799
Intl **United Kingdom, Oxon**
Thame Components Ltd., TEL: 084-421-4561
Intl **United Kingdom, Surrey**
AMD, (U.K.) Ltd., TEL: (04862) 22121

AMCC

AMCC (Applied Micro Circuits Corporation)
5502 Oberlin Drive
San Diego, California 92121
619-450-9333

Sales Office & Representatives

AL **Huntsville**
The Novus Group, 205-881-2207
AZ **Tempe**
Quatra Associates, 602-820-7050
CA **Los Alamitos**
Santana Sales, 213-431-3533, 714-827-9100
CA **Mountain View**
Technology Sales Inc. (TSI), 415-960-0600
CA **San Diego**
Littlefield & Smith Assoc., 619-455-0055
CO **Denver**
Elcom Incorporated, 303-337-2300
FL **Altamonte Springs**
Semtronic Assoc., 810-854-0321
FL **Clearwater**
Semtronic Assoc., 813-461-4675
FL **Ft. Lauderdale**
Semtronic Assoc., 305-731-2484;305-944-0149, 305-276-0809
GA **Lilburn**
The Novus Group, 404-381-1015
IL **Des Plaines**
Electron Marketing Corp., 312-298-2330
IN **Ft. Wayne**
Arete Sales, 219-485-2375
IA **Des Moines**
SPS Associates Ltd., 515-225-0607
KS **Olathe**
SPS Associates Ltd., 913-764-4460
MD **Ellicot City**
D G Reps, 301-621-6073
MD **Towson**
D G Reps, 301-583-1360
MA **Westford**
Boucher Associates, 617-692-7503
MN **Minneapolis**
PSI, 612-944-8545
MO **Earth City**
SPS Associates Ltd., 314-291-0520
NJ **Hasbrouch Hts.**
Comp-Tech Sales, 201-288-7400
NJ **Trenton**
Harry Nash Associates, 609-394-0900
NM **Albuquerque**
Quatra Associates, 505-821-1455
NY **E. Syracuse**
L-Mar Associates, 315-437-9639
NY **Rochester**
L-Mar Associates, 716-323-1000
NC **Greensboro**
United Sales, 919-674-9849
NC **Horseshoe**
D G Reps, 704-891-8126
NC **Raleigh**
D G Reps, 919-772-8073
OR **Portland**
Northwest Marketing Assoc. Inc., 503-620-0441
TX **Arlington**
Comptech Sales, 816-265-6007
TX **Austin**
Comptech Sales, 512-331-8922
TX **Sugarland**
Comptech Sales, 713-491-6695
UT **Salt Lake City**
Elcom Incorporated, 801-485-7415
WA **Bellevue**
Northwest Marketing Assoc. Inc., 206-455-5846
WI **Waukesha**
Electron Marketing Corp., 414-547-1505
Can **Brampton, Ontario**
Clark-Hurman Associates, 416-453-1118
Can **Nepean, Ontario**
Clark-Hurman Associates, 613-727-5626 or 5627
Intl **France, Orsay**
Rep'tronic, TEL: 33-6-928-87-00
Intl **Germany, Sensheim**
Binder Elektronik GmbH, TEL: 07261-1077
Intl **Israel, Petach Tiqva**
EIM, TEL: 972/93-233-257
Intl **Italy, Milano**
Acsis s.r.l., TEL: (02) 4390832
Intl **Japan, Tokyo**
Nihon Teksel Co., Ltd., TEL: 011-813-461-5121
Intl **Sweden, Stockholm**
Sattco, TEL: 4687340040
Intl **The Netherlands, Eindhoven**
Sagantec Europa B.V., TEL: 31-40-521175

Allen Systems

Allen Systems
2151 Fairfax Road
Columbus, Ohio 43221
614-488-7122

Alphatron

Alphatron
10351 Bubb Road
Cupertino, California 95014
408-446-1494

Altera Corporation

Altera Corporation
3525 Monroe St.
Santa Clara, California 95051
408-984-2800
TELEX: 888496
Specific product information:
John Duffy

American Automation

American Automation
14731 Franklin Avenue
Tustin, California 92680
714-731-1661
TWX: 910-595-2670

Sales Office & Representatives

CA **Garden Grove**
Advanced Digital Group, 714-897-0319
CA **San Carlos**
Amlec, 415-591-6535
CA **Tustin**
American Automation, 714-731-1661
MA **Boston**
Resolve Technology, 617-527-8834
Intl **England, Hertfordshire**
Kontron Electronics, TEL: 072766222

Amperex

Amperex Electronic Corporation
Providence Pike
Slatersville, Rhode Island 02876
401-762-3800
TWX: 710-382-6332

Ampro Computers

Ampro Computers, Inc.
67 E. Evelyn Avenue
P. O. Box 390427
Mountain View, California 94039
415-962-0230

Analog Design Tools

Analog Design Tools
800 Menlo Ave., ½ 217
Menlo Park, California 94025
415-328-0780
Specific product information:
Mike Caroll

Analog Devices

Analog Devices
PO Box 280 Two Technology Way
Norwood, Massachusetts 02062
617-329-4700
TELEX: 924-491
TWX: 710-394-6577

Specific product information:
Regional Offices:
Massachusetts, Keith Rutherford, ... 617-329-4700 ext. 1383
Illinois, Ed Kruft, ... 653-5000
California, Walter Borlase, ... 714-641-9391
Texas, Jack Coe, ... 214-231-5094

Literature:
Cammy O'Brien, Director Mail Supervision 617-329-4700 ext. 1391

Price and delivery:
See Product Information

Place an order:
Regional Offices:
Massachusetts, Keith Rutherford .... 617-329-4700 ext. 1383
Illinois, Ed Kruft, ... 653-5000
California 714-641-9391
Texas 214-231-5094

Follow-up an order:
Vin Ciccolo, Manager of Customer Service, ... 617-329-4700 ext. 1311

All other information:
Alan Haun, Technical Publicity Manager .... ext. 1263

Sales Office & Representatives

AL **Huntsville**
Currie, Peak & Frazier, 205-536-1506

AZ **Tempe**
Piper Sales Co., 602-949-0048

CA **Elk Grove**
Analog Devices, 916-685-1303

CA **San Diego**
Analog Devices, 619-268-4621

CA **San Jose**
Analog Devices, 408-947-0633

CA **Santa Ana**
Analog Devices, 714-641-9391

CO **Longmont**
Piper Sales Co., 303-443-5337

FL **Orlando**
Analog Devices, 305-851-3939

FL **Orlando**
Currie, Peak & Frazier, 305-855-0843

FL **Tampa**
Currie Peak & Frazier, 813-963-1076

FL **W. Melbourne**
Currie Peak & Frazier, 305-724-6795

GA **Norcross**
Currie, Peak & Frazier, 404-449-6662

IL **Deerfield**
Torkelson Assocs., 312-945-8700

IL **Glendale Heights**
Analog Devices, 312-653-5000

IN **Indianapolis**
Torkelson Assocs., 317-244-7867

KS **Shawnee**
Technical Sales Assocs., 913-888-3330

MD **Baltimore**
Rep-Tron, Inc., 301-799-7490

MI **Birmingham**
Analog Devices, Inc., 313-644-1866

MI **Detroit**
Rathsburg Assocs., Inc., 313-882-1717

MN **Minneapolis**
Torkelson Assocs., 612-835-2414

MO **St. Louis**
Technical Sales, 314-725-5361

NJ **Maplewood**
Harwood-Sandler Assocs., 516-673-1900

NM **Albuquerque**
Grady Moore Assocs., 505-262-1416

NY **Fairport**
Analog Devices, 716-425-4101

NY **Huntington**
Harwood-Sandler Assocs., 516-673-1900

NY **Syracuse**
Analog Devices, 315-437-5277

NC **Greensboro**
Currie, Peak & Frazier, 919-273-3040

OH **Cleveland**
J.R. Thornberry Assocs., 216-321-3328

OH **Dublin**
Analog Devices, Inc., 614-764-8795

PA **Allison Park**
Electro Sales Assocs., 412-487-3801

PA **Ft. Washington**
Analog Devices, 215-643-7790

TN **Nashville**
Currie, Peak & Frazier, 615-366-4009

TX **Houston**
Analog Devices, 713-664-6704

TX **Richardson**
Analog Devices, 214-231-5094

UT **Salt Lake City**
Piper Sales, 801-268-8707

WA **Renton**
Analog Devices, Inc., 206-251-9550

WI **Brookfield**
Torkelson Assocs., 414-784-7736

Can **Beaconsfield, Quebec**
B.B.D. Elctrns. Inc., 514-697-0804

Can **Mississauga, Ontario**
B.B.D. Elctrns. Inc., 416-821-7800

Can **North Vancouver, British Columbia**
Tracan Elctrns. Western Ltd., 604-984-4141

Can **Ottawa, Ontario**
B.B.D. Elctrns. Inc., 613-729-0023

Intl **Argentina, Buenos Aires**
Rayo Elctrna. s.r.l., TEL: 37-9890

Intl **Australia, Artarmon**
Parameters Pty., Ltd., TEL: 02 439 3288

Intl **Australia, Mordialloc**
Parameters, Pty., Ltd., TEL: 03 580 74 44

Intl **Austria, Vienna**
Intl. Elctrns. Co., TEL: 0222/85 93 04

Intl **Austria, Wien**
Walter Rekirsch Elektronische Gerate Ges. m.b.H. & Co., TEL: 23-55-55-0

Intl **Belgium, Antwerpen**
Analog Devices Benelux, TEL: 032-374803

Intl **Brazil, Sao Paulo**
Artimar Ltd., TEL: 231-0277

Intl **Denmark, Herlev**
Analog Devices APS, TEL: (02) 845 800

Intl **Finland, Helsinki**
Satt Elctrns., TEL: 80 372-300

Intl **France, Grenoble**
Analog Devices, S.A., TEL: (3376) 22 21 90

Intl **France, Rungis**
Analog Devices, S.A., TEL: 687 34 11

Intl **France, Toulouse**
Analog Devices, S.A., TEL: 61 40 85 62

Intl **Holland, Oosterhout**
Analog Devices Benelux, TEL: 0162051080

Intl **Hong Kong, Kowloon**
General Engineers, TEL: (852) 3-855020

Intl **India, Bangalore**
C.H. Krishnan & Assoc., TEL: 560-038

Intl **India, Madras**
C.H. Krishnan & Assoc., TEL: 600-020

Intl **India, New Delhi**
CH Krishnan & Assoc., TEL: 110-029

Intl **Israel, Raananna**
Analog Devices (Israel) Ltd., TEL: 052-28995

Intl **Italy, Bologna**
Dott. Ing. Giuseppe de Mico, TEL: (051) 55 56 14

Intl **Italy, Firenze**
Dott. Ing. Giuseppe de Mico, TEL: (55) 894115

Intl **Italy, Milano**
Analog Devices, SRL, TEL: 68 83831

Intl **Italy, Milano**
Dott. Ing. Giuseppe de Mico, TEL: 9520551

Intl **Italy, Padova**
Dott. Ing. Giuseppe de Mico, TEL: 049 63351

Intl **Italy, Roma**
Dott. Ing. Giuseppe de Mico, TEL: 06/31 62 04

Intl **Italy, Torino**
Dott. Ing. Giuseppe de Mico, TEL: 011 65 03 271

Intl **Japan, Osaka**
Analog Devices of Japan, Inc., TEL: 06/372 1814

Intl **Japan, Tokyo**
Analog Devices of Japan, Inc., TEL: 03/26 36 82 6

Intl **Korea, Seoul**
Kukje Elctrns., TEL: 2423-3101

Intl **New Zealand, Auckland**
W. Arthur Fisher Ltd., TEL: 592-629

Intl **New Zealand, Christchurch**
W. Arthur Fisher Ltd., TEL: 67-692

Intl **New Zealand, Lower Hutt**
W. Arthur Fisher Ltd., TEL: 694-702

Intl **Norway, Hoevik**
Satt Elctrns., TEL: (2) 123600

Intl **Singapore, Asia**
General Engrs. (Electr.) Corp., TEL: 273163

Intl **South Africa, Transvaal**
Ultra Instruments, TEL: 11 786-8025

Intl **Spain, Barcelona**
Interface, S.A., TEL: 32198011

Intl **Spain, Bilbao**
Interface, S.A., TEL: 944150893

Intl **Spain, Madrid**
Interface, S.A., TEL: 173 38937

Intl **Sweden, Bromma**
Analog Devices AB, TEL: 08-282740

Intl **Switzerland, Geneva**
Analog Devices, S.A., TEL: 022 3157 60

Intl **Taiwan, Taipei**
Mitac Inc., TEL: 02 715-0940

Intl **United Kingdom, Surrey**
Analog Devices, Ltd., TEL: 01/94 10 46 6

Intl **West Germany, Berlin**
Herrn Horst Walkusat, TEL: 030/31 64 41

Intl **West Germany, Buchholz**
Analog Devices GmbH, TEL: 04187/381

Intl **West Germany, Karlsruhe**
Analog Devices GmbH, TEL: 0721/61 60 75

Intl **West Germany, Koeln**
Analog Devices GmbH, TEL: 0221/68 60 06

Intl **West Germany, Munchen**
Analog Devices GmbH, TEL: 089/570050

Analogic

Analogic Corporation
8 Centennial Drive
Peabody, Massachusetts 01961
617-246-0300
TWX: 710-348-0425

Sales Office & Representatives

Intl **England, Weybridge, Surrey**
Analogic Ltd.

Intl **West Germany, Nordenstadt**
Analogic GMBH

Analog Systems

Analog Systems Division
P.O. Box 35879
Tucson, Arizona 85740
602-293-4923

Apex Microtechnology

Apex Microtechnology Corporation
2895 W. Rudasill Rd.
Tucson, Arizona 85741
602-742-8600

Sales Office & Representatives

AZ	**Tempe** Martech Assoc., 602-747-8098
AZ	**Tucson** Apex FSC Inc., 602-742-8600
CA	**Los Altos** Kolm Marketing Assoc., 415-948-2635
CA	**San Diego** California Electronic Mktg., 619-692-3551
CA	**Santa Ana** California Electronic Mktg., 714-835-2702
CO	**Denver** W.H. Howard Assocs., 303-426-3499
FL	**Largo** CM Marketing, 813-595-4047
IL	**Chicago** LGS Sales, 312-456-9616
IN	**Ft. Wayne** TX Sales, 219-489-4447
MD	**Ellicott City** Nelson Elctrns., 304-747-7887
MA	**Malden** J. K. Associates, 617-321-2922
MN	**Bloomington** Merrill Franklin Co., 612-854-9446
NY	**Smithtown** T & K Sales, 516-724-3456
TX	**Houston** Repmasters-Houston, 713-680-0215
TX	**Sherman** Repmasters-Dallas, 214-247-6236
Intl	**Finland, Helsinki** Turion Oy, TEL: 90-372144
Intl	**France, Les Ulis Cedex** Microel S.A., TEL: 907.08.24
Intl	**Germany, Nauheim** Emtron Vertriebs GmbH, TEL: (06152) 6003
Intl	**India, Bombay** Elmatronic Devices
Intl	**Israel, Petach-Tikua** E.I.M. International Ltd., TEL: (03) 9233257/8
Intl	**Italy, Milano** Servotecnia S.A.S., TEL: 613.13.41
Intl	**Japan, Tokyo** Kyokuto Boekikaisha, Ltd., TEL: Tokyo 244-3511
Intl	**Netherlands, Oosterhout** Klaasing Electronics b.v., TEL: 01620-51400
Intl	**Norway, Oslo** Eltron A/S, TEL: 02-46 2870
Intl	**South Africa, Johannesburg** Advanced Semiconductor
Intl	**Sweden, Spenga** Scancopter AB, TEL: 46-82-894 25
Intl	**Switzerland, Zug** Anatech Ag, TEL: (042) 315477
Intl	**Taiwan, Taipei** Hitek Co. Ltd., TEL: 536 1157
Intl	**United Kingdom, Middlesex** Pascall Electronics Ltd., TEL: (09327) 87418

Applied Business Computer

Applied Business Computer Co.
1509 N. Kraemer, Suite E
Anaheim, California 92806
714-666-2604

Applied Microsystems

Applied Microsystems Corporation
P.O. Box C-1002
Redmond, Washington 98073
206-882-2000

Applied Systems

Applied Systems Corporation
26401 Harper Avenue
St. Clair Shores, Michigan 48081
313-779-8700

Aptek Microsystems

Aptek Microsystems, Inc.
Hillsboro Plaza, 700 N.W. 12th Avenue
Deerfield Beach, Florida 33441
305-421-8450
TELEX: 441020

Sales Office & Representatives

Intl	**West Germany, Buchenstrasse** Consar GmbH, TEL: 011 49 9355/2655

Array Technology

Array Technology
992 South Saratoga/Sunnyvale Road
San Jose, California 95129
408-252-9900

Astraea Computer

Astraea Computer Corporation
846 Del Rey Avenue
Sunnyvale, California 94086
408-773-8500

AT&T Technology Systems

AT&T Technology Systems
1 Oak Way
Berkeley Heights, New Jersey 07922
800-372-2447

Sales Office & Representatives

AL	**Huntsville** Hamilton/Avnet, 205-837-7210
AZ	**Phoenix** Hamilton/Avnet, 602-231-5100
CA	**Los Angeles** Hamilton/Avnet, 213-726-5184
CA	**Los Angeles** Hamilton, 213-558-2121
CA	**Los Angeles** Hamilton/Avnet, 213-558-2345
CA	**Orange County** Avnet, 714-754-6111
CA	**Orange County** Hamilton, 714-641-4100
CA	**Sacramento** Hamilton/Avnet, 916-925-2216
CA	**San Diego** Hamilton/Avnet, 619-571-7510
CA	**San Fernando Valley** Avnet, 818-700-2600
CA	**San Fernando Valley** Hamilton, 800-700-6500
CA	**San Francisco** Hamilton/Avnet, 408-743-3355
CA	**San Gabriel** Hamilton/Avnet, 714-989-4602
CA	**Sunnyvale** Hamilton/Avnet, 408-746-4422
CO	**Denver** Hamilton/Avnet, 303-779-9998
CT	**Danbury** Hamilton/Avnet, 203-797-2800
FL	**Melbourne** Hamilton/Avnet, 305-725-2700
FL	**Miami** Hamilton/Avnet, 305-971-2900
FL	**Orlando** Hamilton/Avnet, 305-628-3888
FL	**St. Petersburg** Hamilton/Avnet, 813-576-3930
GA	**Atlanta** Hamilton/Avnet, 404-447-6495
GA	**Atlanta** Hamilton/Avnet, 404-447-7507
IL	**Champaign/Urbana** Hamilton/Avnet, 800-325-8654
IL	**Chicago** Hamilton/Avnet, 312-860-7700
IL	**Itasca** Hamilton/Avnet, 312-250-9367
IN	**Indianapolis** Hamilton/Avnet, 317-844-9333
IA	**Cedar Rapids** Hamilton/Avnet, 319-362-4757
KS	**Kansas City** Hamilton/Avnet, 913-888-8900
KS	**Wichita** Hamilton/Avnet, 800-532-6720
KY	**Lexington** Hamilton/Avnet, 606-259-1475
KY	**Louisville** Hamilton/Avnet, 800-428-6012
MD	**Baltimore** Hamilton/Avnet, 301-995-3500
MA	**Boston** Hamilton/Avnet, 617-531-7430
MA	**Burlington** Hamilton/Avnet, 617-229-5672
MI	**Detroit** Hamilton/Avnet, 313-522-4700
MI	**Grand Rapids** Hamilton/Avnet, 616-243-8805
MN	**Minneapolis** Hamilton/Avnet, 612-724-2019
MN	**Minneapolis** Hamilton/Avnet, 612-932-0600
MO	**St. Louis** Hamilton/Avnet, 314-344-1200
NE	**Lincoln/Omaha** Hamilton/Avnet, 800-255-6702
NH	**Manchester** Hamilton/Avnet, 603-624-9400
NJ	**Berkeley Heights** Hamilton/Avnet, 1-800-372-2447
NJ	**Cherry Hill** Hamilton/Avnet, 609-424-0100
NJ	**Fairfield** Hamilton/Avnet, 201-575-3390
NM	**Albuquerque** Hamilton/Avnet, 505-765-1500
NY	**Long Island** Hamilton/Avnet, 516-231-9800
NY	**Rochester** Hamilton/Avnet, 716-475-9130
NY	**Syracuse** Hamilton/Avnet, 315-437-2641

AT&T Technology Systems (Cont)

NC **Raleigh**
Hamilton/Avnet, 919-878-0810
OH **Cleveland**
Hamilton/Avnet, 216-831-3500
OH **Columbus**
Hamilton/Avnet, 614-882-7004
OH **Dayton**
Hamilton/Avnet, 513-439-6700
OR **Portland**
Hamilton/Avnet, 503-635-8831
PA **King of Prussia**
, 215-768-2626
PA **Pennsylvania**
Hamilton/Avnet, 800-258-3848
PA **Philadelphia**
Hamilton/Avnet, 215-831-1300
PA **Pittsburgh**
Hamilton/Avnet, 412-281-4150
SC **Columbia**
Hamilton/Avnet, 800-334-1597
TX **Austin**
Hamilton/Avnet, 512-837-8911
TX **Bedford**
, 817-354-9798
TX **Dallas**
Hamilton/Avnet, 214-659-4111
TX **Houston**
Hamilton/Avnet, 713-780-1771
UT **Salt Lake City**
Hamilton/Avnet, 801-972-2800
WA **Seattle**
Hamilton/Avnet, 206-453-5844
WV **Charleston**
Hamilton/Avnet, 800-367-5733
WV **Wheeling**
Hamilton/Avnet, 800-258-3849
WI **Milwaukee**
Hamilton/Avnet, 414-784-4510
Can **Calgary**
Hamilton/Avnet, 403-230-3586
Can **Montreal**
Hamilton/Avnet, 514-335-1000
Can **Ottawa**
Hamilton/Avnet, 613-226-1700
Can **Toronto**
Hamilton/Avnet, 416-677-7432
Can **Vancouver**
Hamilton/Avnet, 604-437-6667
Intl **West Germany, Munchen**
AT&T Microelectronics Gmb H, TEL: 089/9597-101

AutoCAD

AutoCAD
2658 Bridgeway
Sausilito, California 94965
415-332-2344

Automated Logic Design

Automated Logic Design
3525 Old Conejo Rd., Unit 111
Newbury Park, California 91320
805-999-6867

Automated Systems

Automated Systems
1505 Commerce Ave.
Brookfield, Wisconsin 53005
414-784-6400

AWI

AWI
558 Oakmead Parkway
Sunnyvale, California 94086
408-720-8860

Barvon Research

Barvon Research, Inc. (BRI)
1992 Tarob Court
Milpitas, California 95035
408-262-8368
TELEX: 4998902

Binary Technology

Binary Technology, Inc.
P. O. Box 67
Main Street
Meriden, New Hampshire 03770
603-469-3232

Basicon, Inc.

Basicon, Inc.
11895 N.W. Cornell Road
Portland, Oregon 97229
503-626-1012

Bedford Control Systems

Bedford Control Systems
989 Main Street
Acton, Massachusetts 01720
617-275-0870

Brooktree Corporation

Brooktree Corporation
9950 Barnes Canyon Road
San Diego, California 92121
619-452-7580
TELEX: 383596

Specific product information:
Dale Roark/Jeff Teza
Application engineering:
Charles Stanley
Literature:
Marketing Dept.
Price and delivery:
Pamela Moore
Place an order:
Pamela Moore
Follow-up an order:
Pamela Moore
All other information:
Joe Santen-V.P. Marketing

Sales Office & Representatives

AL **Huntsville**
The Novus Group Inc., 205-881-2207
AZ **Scottsdale**
Western High Tech Marketing Inc., 602-949-0873
CA **Fallbrook**
Martronix, 619-728-7678
CA **Santa Clara**
Quorum Technical Sales, 408-980-0812
CA **Thousand Oaks**
SC Cubed, 805-496-7307
CA **Tustin**
SC Cubed, 714-731-9206
CO **Englewood**
Component Sales Inc., 303-779-8060
CT **Ridgefield**
Phoenix Sales, 203-438-9644
FL **Largo**
CM Marketing, 813-585-7841
FL **Orlando**
CM Marketing, 305-841-7423
GA **Lilburn**
The Novus Group Inc., 404-939-1135
ID **Boise**
N.R. Scultz Co., 208-377-8686
IL **Des Plaines**
Electron Marketing Corp, 312-298-2330
IN **Fort Wayne**
Arete Sales Inc., 219-485-2375
IA **Des Moines**
SPS Associates Ltd., 515-225-0607
KS **Olathe**
SPS Associates Ltd., 913-764-4460
MD **Baltimore**
Conroy Sales, Inc., 301-296-2444
MA **Westford**
Boucher Associates Inc., 617-692-7503
MI **Ypsilanti**
Techrep, Inc., 313-572-1950
MN **Minneapolis**
Comprehensive Technical Sales, 612-888-7011
MO **Earth City**
SPS Associates Ltd., 314-291-0520
NE **Panama**
SPS Associates Ltd., 913-764-4460
NJ **Trenton**
Harry Nash Associates, 609-394-0900
NM **Albuquerque**
Western High Tech Marketing Inc., 505-884-2256
NY **Commack**
ERA Inc., 516-543-0510
NY **Syracuse**
T Squared Electronics Co., Inc., 315-463-8592
NC **Raleigh**
The Novus Group Inc., 919-872-3966
OH **Dayton**
Lyons Corporation, 513-278-0714
OH **Richfield**
Lyons Corporation, 216-659-9224
OH **Westerville**
Lyons Corporation, 614-890-2743
OR **Beaverton**
N.R. Scultz Co., 503-643-1644
PA **Bridgeville**
Lyons Corporation, 412-745-8967
TX **Arlington**
Comptech Sales, Inc., 817-265-6007
TX **Austin**
The Novus Group, 512-331-8922
TX **Sugarland**
The Novus Group, 713-491-6695
UT **Salt Lake City**
Component Sales Inc., 801-268-8440
WA **Bellevue**
N.R. Scultz Co., 206-454-0300
WI **Waukesha**
Electron Marketing Corp., 414-547-1505
Can **Mississauga, Ontario**
Microscape, 416-626-8221
Can **Ottawa, Ontario**
Microscape, 613-236-1221
Can **Port Moody, BC**
Woodbery Electronics Sales, Ltd., 604-461-6811

Brooktree Corporation (Cont)

Distributors

AL	**Huntsville** Quality Components, 205-830-1881
AL	**Huntsville** Quality Components, 205-830-1881
AZ	**Scottsdale** Western Microtechnology, Inc., 602-948-4240
AZ	**Tempe** Insight Electronics, Inc., 602-829-1800
CA	**Cupertino** Western Microtechnology, 408-725-1660
CA	**San Diego** Insight Electronics, Inc., 619-587-0471
CO	**Denver** Alliance Electronics Inc., 303-831-8091
CT	**Meriden** Lionex Corporation, 203-237-2282
GA	**Norcross** Quality Components, 404-449-9508
IL	**Woodale** Time Electronics, 312-350-0610
MD	**Columbia** Lionex Corporation, 301-964-0040
MA	**Wilmington** Lionex Corporation, 617-657-5170
NJ	**Fairfield** Lionex, 201-227-7960
NM	**Albuquerque** Alliance Electronics, Inc., 505-292-3360, 800-223-6254
NY	**Hauppauge** Lionex Corporation, 516-273-1660
NC	**Raleigh** Quality Components, 919-876-7767
OK	**Tulsa** Quality Components, 918-664-8812
OR	**Beaverton** Western Microtechnology, Inc., 503-629-2082
PA	**Horsham** Lionex Corporation, 215-443-5150
TX	**Addison** Quality Components, 214-773-4300
TX	**Austin** Quality Components, 412-835-0220
TX	**Sugarland** Quality Components, 713-240-2255
WA	**Redmond** Western Microtechnology, Inc., 206-881-6737

Burr-Brown

Burr-Brown Corporation
International Airport Industrial Park
Tucson, Arizona 85734
602-746-1111
TELEX: 66-6491
TWX: 910-952-1111
Specific product information:
Sales Department .... (602) 746-7220

Sales Office & Representatives

CA	**Los Angeles** Burr-Brown, 818-991-8544;805-496-7581
CA	**Los Angeles** Burr-Brown, 818-991-8544, 805-496-7581
CA	**San Jose** Burr-Brown, 408-559-8600
CA	**San Jose** Burr-Brown, 408-559-8600
CA	**Santa Ana** Burr-Brown, 714-835-0712
CA	**Santa Ana** Burr-Brown, 714-835-0712
CO	**Denver** Burr-Brown, 303-663-4440
CO	**Denver** Burr-Brown, 303-663-4440
FL	**Orlando** Conley & Assoc., Inc., 305-365-3283
FL	**Orlando** Conley & Assocs., Inc., 305-365-3283
IL	**Addison** Burr-Brown, 312-832-6520
IL	**Addison** Burr-Brown, 312-832-6520
MD	**Hunt Valley** Marktron, Inc., 301-628-1111
MD	**Huntvalley** Marktron Inc., 301-628-1111
MD	**Rockville** Marktron, Inc., 301-251-8990
MD	**Rockville** Marktron, Inc., 301-251-8990
MA	**Burlington** Burr-Brown, 617-273-9022
MA	**Burlington** Burr-Brown, 617-273-9022
MI	**Detroit** Burr-Brown, 313-474-6533
MI	**Detroit** Burr-Brown, 313-474-6533
MN	**Bloomington** Elctrn. Sales, 612-884-8291
MN	**Bloomington** Elctrn. Sales, 612-884-8291
NY	**Clinton** Advanced Comps. Corp., 315-853-6438
NY	**Clinton** Advanced Comps.Corp., 315-853-6438
NY	**Endicott** Advanced Comps. Corp., 607-785-3191
NY	**Endicott** Advanced Comps. Corp., 607-785-3191
NY	**Rochester** Advanced Comps., 716-544-7017
NY	**Rochester** Advanced Comps. Corp., 716-544-7017
NY	**Scottsville** Advanced Comps. Corp., 716-889-1429
NY	**Scottsville** Advanced Comps. Corp., 716-889-1429
NY	**Syracuse** Advanced Comps., 315-699-2671
NY	**Syracuse** Advanced Comps. Corp., 315-699-2671
NY	**Yonkers** Burr-Brown, 914-964-5252
NY	**Yonkers** Burr-Brown, 914-964-5252
NC	**Winston-Salem** Murcota Corp., 919-722-9445
NC	**Winston-Salem** Murcota Corp., 919-722-9445
OH	**Chesterland** K-T Marketing Inc., 216-442-6200
OH	**Chesterland** K-T Marketing Inc., 216-442-6200
OH	**Dublin** Burr-Brown, 614-764-9764
OH	**Dublin** Burr-Brown, 614-764-9764
PA	**Pittsburgh** K-T Marketing, 412-367-1011
PA	**Pittsburgh** K-T Marketing, 412-367-1011
PA	**Willow Grove** QED Elctrns., 215-657-5600
PA	**Willow Grove** QED Elctrns., 215-657-5600
TX	**Dallas** Burr-Brown, 214-681-5781
TX	**Dallas** Burr-Brown Corp., 214-681-5781
TX	**Houston** Burr-Brown, 713-988-6546
TX	**Houston** Burr-Brown Corp., 713-988-6546
UT	**Salt Lake City** Aspen Sales, 801-467-2401
UT	**Salt Lake City** Aspen Sales, 801-467-2401
WA	**Bellevue** Burr-Brown, 206-455-2611
WA	**Bellevue** Burr-Brown, 206-455-2611
Can	**Mississauga, Ontario** Allan Crawford Assocs., 416-890-2010
Can	**Mississauga, Ontario** Allan Crawford Assocs., 416-890-2010
Intl	**Australia, Clayton-Victoria** Kenelec, TEL: (03) 560-1011
Intl	**Australia, Clayton-Victoria** Kenelec, TEL: (03) 560-1011
Intl	**Austria, Wien** Burr-Brown GmbH, TEL: 0222/62 63 71
Intl	**Austria, Wien** Burr-Brown GmbH, TEL: 0222/62 63 71
Intl	**Belgium, Brussels** Burr-Brown GmbH, TEL: (02) 347-44-30
Intl	**Belgium, Bruxelles** Burr-Brown Intl. Belgium, TEL: (02) 347-44-30
Intl	**Denmark, Hoersholm** Mer-el A/S, TEL: 02-571000
Intl	**Denmark, Hoersholm** Mer-el A/S, TEL: 02-571000
Intl	**England, Bourne End, Bucks** Micro-Marketing (Elctrns.) Ltd., TEL: 06285-29222
Intl	**England, Hertfordshire** Burr-Brown Int'l Overseas Mkt, TEL: (0923) 46759
Intl	**England, Hertfordshire** Burr-Brown Int'l Overseas Mkt., TEL: (0923) 46759
Intl	**England, Salisbury, Wiltshire** Corintech, TEL: (0722) 337582
Intl	**Finland** Perel OY, TEL: 14-21600
Intl	**Finland** Perel OY, TEL: (9)14-21600
Intl	**France, Le Chesnay** Burr-Brown Intl. S.A., TEL: (01) 3-954-3558
Intl	**France, LeChesnay** Burr-Brown Intl. S.A., TEL: (01) 954-3558
Intl	**Germany, Bremen** Burr-Brown Intl. GmbH, TEL: 0421/25 39 31
Intl	**Germany, Bremen** Burr-Brown Intl. GmbH, TEL: 0421/25 39 31
Intl	**Germany, Duesseldorf** Burr-Brown Intl. GmbH, TEL: 02154/8445
Intl	**Germany, Dusseldorf** Burr-Brown Intl. GmbH, TEL: 02154/8445
Intl	**Germany, Erlangen** Burr-Brown Intl. GmbH, TEL: 09131-42728
Intl	**Germany, Erlangen** Burr-Brown Intl. GmbH, TEL: 09131-42728
Intl	**Germany, Frankfurt** Burr-Brown Intl. GmbH, TEL: 06061/71564
Intl	**Germany, Munchen** Burr-Brown Intl. GmbH, TEL: 089/61 7737
Intl	**Germany, Munchen** Burr-Brown Intl. GmbH,, TEL: 089/61 7737
Intl	**Hong Kong, Hong Kong** Schmidt & Co. (H.K. Ltd.), TEL: 5-8330222
Intl	**Hong Kong, Hong Kong** Schmidt & Co. (H.K. Ltd.), TEL: 5-8330222
Intl	**India, Bombay** Oriole Services & Consits. Pty., Ltd., TEL: 5122973-74-75

Burr-Brown (Cont)

Intl	**India, Bombay** Oriole Services & Consults. Pty., Ltd., TEL: 5122973-74-75
Intl	**Israel, Herzlia B.** Vetronics Ltd., TEL: 052-56070
Intl	**Israel, Tel Aviv** Racom Elctrns. Co., Ltd., TEL: 03-491922
Intl	**Israel, Tel Aviv** Racom Elctrns. Co., Ltd., TEL: 03-491922
Intl	**Italy, Milano** Burr-Brown Int'l S.r.l., TEL: 02-506-5228
Intl	**Italy, Milano** Burr-Brown Int'l S.r.l.; Italy, TEL: 02-506-5228
Intl	**Italy, Milano** CEFRA s.r.l., TEL: 02-23-52-64
Intl	**Japan, Osaka** Burr-Brown Japan Ltd., TEL: 06/305-3287
Intl	**Japan, Osaka** Burr-Brown Japan Ltd., TEL: 06/305-3287
Intl	**Japan, Tokyo** Burr-Brown Japan Ltd., TEL: (03) 586-8141
Intl	**Japan, Tokyo** Burr-Brown Japan, Ltd., TEL: (03) 586-8141
Intl	**Korea, Seoul** Oyang Corp., TEL: 725-6991
Intl	**Korea, Seoul** Oyang Corp., TEL: 725-6991
Intl	**Netherlands, Shiphol** Burr-Brown Intl. B.V., TEL: 020-470590
Intl	**Netherlands, Shiphol** Burr-Brown Intl. B.V., TEL: 020-470590
Intl	**New Zealand, Auckland** McLean Information Technology Ltd., TEL: 501-801
Intl	**New Zealand, Auckland** McLean Information Technology Ltd., TEL: 501-801
Intl	**Norway, Oslo** H.C.A. Melbye, TEL: (02) 106050
Intl	**Norway, Oslo** H.C.A. Melbye, TEL: (02) 106050
Intl	**Portugal, Lisbon** Telectra, TEL: 686072
Intl	**Portugal, Lisbon** Telectra, TEL: 686072
Intl	**Spain, Madrid** Unitronics SA, TEL: 242-5204
Intl	**Spain, Madrid** Unitronics SA, TEL: 242 5204
Intl	**Sweden Upplands, Vasby** Burr-Brown Intl AB, TEL: 0760-93010
Intl	**Sweden, Upplands, Vasby** Burr-Brown Intl AB, TEL: 0760-93010
Intl	**Switzerland, Zurich** Burr-Brown Intl AG, TEL: 01/724 09 28
Intl	**Switzerland, Zurich** Burr-Brown Intl., AG, TEL: 01/724 09 28
Intl	**Taiwan, Taipei** Alpha Precision Instrmn., TEL: (02) 752-8237
Intl	**Taiwan, Taipei** Alpha Precision Instrmn., TEL: (02) 752-8237
Intl	**West Germany, Offenbach** Neutron GmbH, TEL: (6 11) 81 39 30
Intl	**Yugoslavia, Ljubljana** Elektrotehna N. Sol O. Ljubljana, TEL: 061/329745
Intl	**Yugoslavia, Ljubljana** Elektrotehna N. Sol O. Ljubljana, TEL: 061/329745

Distributors

AZ	**Tucson** Burr-Brown Corporation, 602-746-1111, 602-746-7220
CA	**Milpitas** Barvon Research, Inc., 408-262-8368
CA	**San Jose** California Devices Inc., 408-295-3700
CA	**Sunnyvale** AWI, 408-720-8860
CA	**Sunnyvale** Cermetek Microelectronics, Inc., 408-734-8150
IL	**Champaign** Central Data Corporation, 217-359-8010, 800-482-0315
MA	**Acton** Bedford Control Systems, 617-275-0870
MA	**Cambridge** Cambridge Digital Systems, 617-491-2700
NH	**Meriden** Binary Technology, 603-448-1285
OR	**Portland** Basicon, Inc., 503-626-1012
TX	**Dallas** Century Computer, 214-233-3238

Cadam

Cadam
1935 N. Buena Vista St.
Burbank, California 91504
818-841-9470

Cadnetix

Cadnetix Corporation
5757 Central Ave.
Boulder, Colorado 80301
303-444-8075
FAX: 303-449-0651
TELEX: 322810

Sales Office & Representatives

AZ	**Mesa** Sales Office, 602-820-5826
CA	**Newport Beach** Sales Office, 714-476-2866
CA	**Santa Clara** Sales Office, 408-986-1777
CO	**Denver** Sales Office, 303-758-5400
FL	**Orlando** Sales Office, 305-851-8770
IL	**Schaumburg** Sales Office, 312-397-4840
MA	**Bedford** Sales Office, 617-275-3380
MN	**Eden Prairie** Sales Office, 612-941-2124
NJ	**Cranbury** Sales Office, 609-655-7400
NY	**Melville** Sales Office, 516-752-7755
TX	**Dallas** Sales Office, 214-869-0141
VA	**Vienna** Sales Office, 703-790-0570
WA	**Bellevue** Sales Office, 206-451-1569
Can	**Mississauga, Ontario** Cadnetix Corp., 416-272-1045
Intl	**Germany, Munich** Cadnetix Corporation, TEL: 089 5010 36
Intl	**Japan, Tokyo** Kanematsu Semiconductor, TEL: 81 3 555 0711
Intl	**United Kingdom, Swindon, Wiltshire** Cadnetix Ltd., TEL: 793-616-400

Cadtec

Cadtec
2355 Old Oakland Road
San Jose, California 95131
408-942-1535

CAE Systems

(See Tektronix)

CAECO

CAECO
Division of Chromatics, Inc.
1160 South State St., Suite 280
Orem, Utah 84058
801-226-6509
Specific product information:
Philip Bunker

Caedent

Caedent Corporation
1901 N. Union, ½ 102
Colorado Springs, Colorado 80909
303-634-0722
Specific product information:
Gordon Hoffman

Calay

Calay Systems
2698 White Rd.
Irvine, California 92714
714-863-1700

California Devices

California Devices Inc.
2201 Qume Dr.
San Jose, California 95131
408-945-5000
TELEX: 176928

Sales Office & Representatives

AL	**Huntsville** 20th Century Marketing, 205-533-9281
AZ	**Scottsdale** Memco Sales Inc., 602-952-2254
CA	**San Diego** Hadden Associates, Inc., 619-565-9444
CA	**Sunnyvale** Electec Sales, Inc., 408-747-1722
CO	**Denver** Quorum 3 Sales Group, 303-696-8480
FL	**Lighthouse Point** R. C. Simon & Co. Inc., 305-941-2757
FL	**Riverview** R. C. Simon & Co. Inc., 813-689-6524
GA	**Norcross** 20th Century Marketing, 404-446-1999
IL	**Barrington** OMNI Elctrn. Mktg., 312-381-9087
IN	**Ft. Wayne** J & B Engineering Sales, 219-483-2813
KS	**Overland Park** Advanced Technical Sales, 913-642-6675
MD	**Hunt Valley** Phoenix Electronic Sales, 301-628-2066

California Devices (Cont)

MA **Waltham**
Dynasel Corp., 617-890-6777

MI **Taylor**
Source Electronics, 313-295-7790

MN **Minneapolis**
Intl. Elctrns., Inc., 612-571-0000

NY **Jericho**
J-Square Mktg., 516-935-3200

OH **Rocky River**
Norm Case & Assocs., Inc., 216-333-0400

OH **Westerville**
Norm Case & Assocs., Inc., 614-895-0404

PA **Norristown**
Denco Data Equipment Sales, 215-630-8990

TN **Knoxville**
20th Century Marketing, 615-690-1618

TX **Irving**
IMPAQ Sales Company, 214-257-3677

Intl **England, Fordingbridge, Harts**
Corintech, TEL: (0722) 337582

Intl **Israel, Herzlia B**
Vectronics Ltd., TEL: 052-56070

Intl **Italy, Milano**
CEFRA s.r.l., TEL: 02-23-52-64

Intl **West Germany, Offenbach**
Neutron GmbH, TEL: (6 11) 81 39 30

Distributors

CA **Cupertuno**
Western Microtechnology Corp., 408-725-1660

CA **Santa Clara**
Western Microtechnology Corp., 408-980-0467

CA **Sunnyvale**
Diplomat Electronics Corp., 408-734-1900

NJ **Totowa**
Diplomat Electronics Corp., 609-751-0440

NY **Melville**
Duplomat Electronics Corp., 516-454-6334

Calmos

Calmos Systems Inc.
20 Edgewater St.
Kanata, Ontario, Canada K2L 1V8
613-836-1014
TELEX: 053-4501

Calos

Calos
3419 Edison Way
Fremont, California 94538
415-657-4430

Cambridge Digital Systems

Cambridge Digital Systems
65 Bent Street, POB 568
Cambridge, Massachusetts 02139
617-491-2700

Case Technology

Case Technology
633 Menlo Ave.
Menlo Park, California 94025
415-322-4705

Sales Office & Representatives

CA **Campbell**
Elcor Associates, 408-866-5505

CA **Garden Grove**
ADG (Advanced Digital Group), 213-598-9645, 714-897-0319

CA **Melbourne**
Saber Associates, 305-724-0920, 800-432-6288

CO **Englewood**
Barnhill Associates, 303-779-3600

IL **Rolling Meadows**
Commodore-I, Inc., 312-394-5441

IA **Indianapolis**
TMS, Inc., 317-845-9626

MD **Baltimore**
Rep-tron, Inc., 301-799-7490, 301-621-1313

NH **Nashua**
MJT Associates, Inc., 603-889-5373, 800-544-4502

NJ **Marlton**
Javie-Bickel, Inc., 609-596-6900

Central Data

Central Data Corporation
1602 Newton Drive
Champaign, Illinois 61821-1098
217-359-8010
800-482-0315
TWX: 910-245-0787

Century Computer

Century Computer
14453 Gillis Road
Dallas, Texas 75234
214-233-3238

Cericor

Cericor Inc.
5215 Wiley Post Rd.
Salt Lake City, Utah 84116
801-537-1700
Specific product information:
Jack Spigarelli

Cermetek Microelectronics

Cermetek Microelectronics, Inc.
1308 Borregas Avenue
P.O. Box 3565
Sunnyvale, California 94088-3565
408-752-5000
TWX: 910-379-6931

Sales Office & Representatives

Intl **England, Bourne End, Bucks**
Micro-Marketing (Elctrns.) Ltd., TEL: 06285-29222

Intl **England, Camberley Surrey**
Dialogue Distribution Ltd., TEL: 0276-682001

Intl **Finland**
Nabla Electroniikka OY, TEL: TLX 124270 Nabla SF

Intl **France**
Datadis, TEL: 842-201905

Intl **Hong Kong, Hong Kong**
Yes Products LTD, TEL: 0-444-241-6

Intl **India, Bangalor**
Electrolink Systems, TEL: 41894

Intl **Italy, Milano**
Cefra S. R. L., TEL: (02) 23.52.64-23.60.154

Intl **Japan, Tokyo, Shinjuku-Ku**
Microtek Inc., TEL: 03-363-2317

Intl **Sweden, Vallingby**
Svensk Teleindustri, TEL: TLX 854 13033

Intl **Switzerland**
Egli, Fischer Co., Ltd., TEL: TLX 815535 EFZ CH

Intl **West Germany**
Astrohic Cosmos, TEL: 089-309031

Distributors

Intl **England, Camberley Surrey**
Dialogue Distribution Ltd., TEL: 0276-682001

CGRS Microtech

CGRS Microtech, Inc.
P.O. Box 102
Langhorne, Pennsylvania 19047
215-757-0284

Chancellor Computer

Chancellor Computer
1101 San Antonio Rd., Ste. 202
Mountain View, California 94043
415-969-5000

Charles River Data Systems

Charles River Data Systems
983 Concord Street
Framingham, Massachusetts 01701

Cherry Semiconductor

Cherry Semiconductor Corporation
2000 South County Trail
East Greenwich, Rhode Island 02818
401-885-3600
TELEX: WUI-6817157
TELEX: Telefax 401-885-5786
Specific product information:
Marketing & Sales Department 401 885-3600

Sales Office & Representatives

Intl **England**
Clere Elctrns., TEL: 44-635-298574

Intl **Hong Kong, Wanchai**
CET, Ltd., TEL: 852-5-200922

Intl **Japan, Tokyo**
Nippon Imex, TEL: 03-321-4415

Intl **Singapore, Asia**
Dynamar Intl., Ltd., TEL: 7476188

Intl **Taiwan, Taipei**
Dynamar (Taiwan) Ltd., TEL: 886-5418251

Chips & Technology

Chips & Technology, Inc.
521 Cottonwood Dr.
Milpitas, California 95035
408-434-0600
TELEX: 272929 CHIPS UR
Specific product information:
Sikander Naqvi
Price and delivery:
Sikander Naqvi

Chrislin Industries

Chrislin Industries, Inc.
Computer Products Division
31352 Via Colinas, No. 101
Weatlake Village, California 91362

Cirrus Logic

Cirrus Logic, Inc.
1463 Centre Pointe Drive
Milpitas, California 95035
408-945-8300
Specific product information:
Bob Lanford

Citel

Citel Inc.
3060 Raymond St.
Santa Clara, California 95054
408-727-6562

Codata Systems

Codata Systems Corp.
285 North Wolfe Road
Sunnyvale, California 94086
408-735-1744
TELEX: 172869

Comark

Comark Corporation
93 West St.
P.O. Box 474
Medfield, Massachusetts 02052
617-359-8161

Comlinear

Comlinear Corporation
P.O. Box 20600
Fort Collins, Colorado 80522
303-226-0500
TELEX: 45-0881
TELEX: Fax: 303-226-0564
Specific product information:
Dave Ford
Application engineering:
Wayne Lonowski

Sales Office & Representatives

Intl **England, Essex**
Anglia Microwave, TEL: 44-2774-58955
Intl **France, Suresnes**
I.S.C., TEL: 506-4275
Intl **Holland**
Tekelec Airtronic, TEL: 79-310100
Intl **Israel, Tel Aviv**
Militron, TEL: 03-796927
Intl **Italy, Milan**
Microelit, TEL: 02-4690444
Intl **Italy, Rome**
Microelit, TEL: 02-89708-92
Intl **Japan, Tokyo**
Internix, Inc., TEL: 03 369 1101
Intl **Sweden, Goteborg**
Setron, TEL: 031-492273
Intl **Sweden, Stockholm**
Setron, TEL: 08-7530055
Intl **Switzerland, Zurich**
Dimos AG, TEL: 01-6261-40
Intl **Taiwan, Taipei**
Evergo, TEL: 02-536-7451
Intl **West Germany, Muenchen**
Tekelec Airtronic, TEL: 49-089-594153

Computer Automation

Computer Automation
Computer Products Division
2181 Dupont Dr.
Irvine, California 92713
714-833-8830
TWX: 910-595-2543
Specific product information:
Ext. 588
Literature:
Ext. 226
Ext. 588
Place an order:
Sales Office
Follow-up an order:
Ext. 350
All other information:
Marketing .... ext. 226
Communications .... ext. 226

Sales Office & Representatives

Intl **England, Hertfordshire**
CAI, Ltd., TEL: Rickmansworth (09237)
Intl **Germany, Frankfurt**
Computer Automation GmbH

Distributors

Intl **Denmark, Copenhagen**
SC Metric A/S, TEL: (02) 80-4200
Intl **France, Boitespostale**
Yrel Electronique et Informatique, TEL: 956 81-42
Intl **India, Bombay**
Micronic Devices, TEL: 486170
Intl **Japan, Tokyo**
Showa Info. Sys., TEL: 403-7101
Intl **Sweden, Stockholm**
Scandia Metric AB, TEL: 08-820400
Intl **Switzerland, Wil**
Datacare AG, TEL: 073/22 05 92

Computervision

Computervision
15 Crosby Drive
Bedford, Massachusetts 01730
617-275-1800

Connecticut MicroComputer

Connecticut MicroComputer, Inc.
568 Danbury Rd.
New Milford, Connecticut 06766
203-354-9395
TWX: 710-456-0052

Control Data

Control Data
Information Systems Division
2500 Mission College Blvd.
Santa Clara, California 95054
408-727-8100

Control Logic

Control Logic, Inc.
Nine Tech Circle
Natick, Massachusetts 01760
617-655-1170

Cortex Research

Cortex Research Corporation
1934 Raymond Drive
Northbrook, Illinois 60062
312-480-1088
TELEX: 467323

Creative Micro Systems

Creative Micro Systems
3822 Cerritos Avenue
Los Alamitos, California 90720
213-493-2484

Cromemco

Cromemco
280 Bernardo Avenue
Mountain View, California 94039
415-964-7400
TWX: 910-379-6988

CTI

Circuit Technology Inc.
160 Smith St.
Farmingdale, New York 11735
516-293-8686

Sales Office & Representatives

AZ **Scottsdale**
Paul Cantrell, 602-991-7306
CA **Manhattan Beach**
Bryan Geyer, 213-374-7446
CA **Newbury Park**
George Sponsler, 818-991-5773
CA **Santa Clara**
Comtronics Inc., 408-773-9800
CO **Broomfield**
Sunbird Industries Inc., 303-460-9199
FL **Altamonte Springs**
C Associates, 305-831-1717
FL **Palm Harbor**
C Associates, 813-736-3422

CTI (Cont)

FL **Pompano Beach**
C Associates, 305-972-9200
IL **Wauconda**
Cudahy Sales Co., 312-526-2484
IN **Ft. Wayne**
The Given Corp., 219-432-5585
MD **Baltimore**
Stemler Associates, 301-944-8262
MN **Minneapolis**
Ron Zechmeister, 612-535-7673
NY **Albany**
Reagan-Compar, 518-489-7408
NY **Commack**
E R A , 516-543-0510
NY **Endwell**
Reagan-Compar, 607-723-8743
OR **Beaverton**
Luscombe Engineering Co.-Northwest, 503-636-6664
UT **Salt Lake City**
Sunbird Industries Inc., 801-272-1303
Can **Rexdale, Ontario**
Source Electronics, 416-675-6235, (Ottawa: 613-592-5392)
Intl **Israel, Herzlia**
Electronic Microsystems Ltd., TEL: 972-52-555895

Cubit

Cubit Inc.
190 So. Whisman Rd.
Mountain View, California 94041
415-962-8237

Custom Integrated Circuits

Custom Integrated Circuits
5353 Wayzata Boulevard, Suite 603
Minneapolis, Minnesota 55416
612-542-1115

Cybernetic Micro Systems

Cybernetic Micro Systems
P.O. Box 3000
San Gregorio, California 94074
415-726-3000
TELEX: 171-135 attention: Cybernetics

Distributors

Intl **Argentina, Buenos Aires**
YEL S.R.L., TEL: 46-2211
Intl **Belgium, Hundelgemsesteenweg**
Belcomp SPRL, TEL: 091 3152 22
Intl **England, Cleveland**
Weyfringe, TEL: 0642-470121
Intl **France, Paris**
Ets Andre Kovacs, TEL: 250-89-70
Intl **India, Bombay**
M.J. Exports Pvt Ltd., TEL: 230644
Intl **Israel, Tel Aviv**
R.N. Elctrns. Agencies Ltd., TEL: (03) 708 174, (03) 796927
Intl **Italy, Milano**
Skylab, S.R.L., TEL: (02) 688 38 06
Intl **Japan, Tokyo**
Systems Mktg., Inc., TEL: 03-254-2751
Intl **Latin America**
Intectra, TEL: (415) 967-8188
Intl **Norway, Oslo**
Hans H. Schive As, TEL: (02) 55 76 92
Intl **South Africa, Cape Town**
Eagle Elec. Co. (Pty.) Ltd., TEL: 45-1421
Intl **Sweden, Stockholm**
Satt Elctrns., TEL: 08/81 01 00
Intl **Switzerland, Zug**
Anatec Electronische Bauteile, TEL: (042) 31 5477
Intl **West Germany, Munchen**
Scantec GmbH, TEL: (089) 13 40 93

Cypress Semiconductor

Cypress Semiconductor Corp.
3901 North First Street
San Jose, California 95134
408-943-2600

Sales Office & Representatives

AL **Huntsville**
The Novus Group, 205-881-2207
AZ **Scottsdale**
Luscome Engineering, 602-949-9333
CA **Agoura Hills**
Cypress Semiconductor, 818-991-7118
CA **Mission Viejo**
Cypress Semiconductor, 714-643-0770
CA **Mountain View**
Taarcom, 415-960-1550
CA **San Jose**
Cypress Semiconductor, 408-943-2600
CO **Englewood**
Thorson Rocky Mtn, 303-779-0666
CT **Waterbury**
HLM, 203-753-9894
FL **Largo**
CM Marketing, 813-585-7841
FL **Orlando**
CM Marketing, 305-841-7423
FL **Tampa**
Cypress Semiconductor, 813-968-1504
GA **Lilburn**
The Novus Group, 404-381-1015
IL **Arlington Hts**
Micro Sales Inc., 312-956-1000
IL **Palatine**
Cypress Semiconductor, 312-934-3144
IN **Carmel**
Technology Mktg. Corp, 317-844-8462
IN **Ft. Wayne**
Technology Mktg. Corp, 219-432-5553
IA **Cedar Rapids**
Midwest Tech. Sales, 319-365-4011
KS **Merriam**
Midwest Tech. Sales, 913-236-8555
KS **Merriam**
Midwest Tech. Sales, 913-236-8555
KS **Wichita**
Midwest Tech. Sales, 316-262-7240
KY **Louisville**
Technology Mktg. Corp, 502-499-7808
MD **Towson**
Arbotek Assoc., 301-825-0775
MA **Dedham**
Cypress Semiconductor, 617-461-1778
MA **Needham**
Comsales, 617-444-8071
MI **Novi**
Action Components, 313-349-3940
MI **Ypsilanti**
Techrep, 313-572-1950
MN **Minnetonka**
Cypress Semiconductor, 612-935-7747
MO **St. Charles**
Midwest Tech. Sales, 314-441-1012
NJ **Mt. Laurel**
Comtek, 609-235-8505
NJ **Parsippany**
HLM, 201-263-1535
NY **Albany**
Reagan/Compar, 518-489-7408
NY **Endwell**
Reagan/Compar, 607-723-8743, 607-754-2171
NY **Fairport**
Reagan/Compar, 716-271-2230
NY **New Hartford**
Reagan/Compar, 315-732-3775
NY **Northport**
HLM, 516-757-1606
NY **West Henrietta**
Reagan/Compar, 716-271-2230
NC **Raleigh**
Tingen Tech. Sales Inc., 919-878-4440
OH **Dayton**
Lyons, 513-278-0714
OH **Richfield**
Lyons, 216-659-9224
OH **Westerville**
Lyons, 614-890-2743
OK **Bixby**
South States Mktg., 918-369-3233
OR **Portland**
Cypress Semiconductor, 503-684-1112
PA **Trevose**
Cypress Semiconductor, 215-639-6663
PA **Bridgeville**
Lyons, 412-745-8967
PA **Holland**
Cypress Semiconductor, 215-860-0426
TX **Austin**
South States Mktg., 512-452-9459
TX **Dallas**
Cypress Semiconductor, 214-239-2901
TX **Houston**
South States Mktg., 713-558-4900
TX **Richardson**
South States Mktg., 214-238-7500
UT **W. Valley City**
Thorson Rocky Mtn., 801-973-7969
WA **Bellevue**
Venture Electronics, 206-454-4594
WI **Menomonee**
Micro Sales Inc., 414-251-0151
Can **Mississauga, Ont.**
MSE, 416-626-8221
Can **Ottawa, Ontario**
MSE, 613-722-7667
Intl **Austria, Wien**
Hitronik Vertiebsges, TEL: 43-0222-824199
Intl **Belgium, Brussels**
Cypress Semiconductor, TEL: 32-2-672-2220
Intl **Belgium, Brussels**
Cypress Semiconductor, TEL: (32) 2-672-2220
Intl **Belgium, Brussels**
Microtronica, TEL: 32-2-2167061
Intl **Denmark, Herlev**
A/S Nordisk Electronik, TEL: 45-2-842000
Intl **England, Gants Hill**
Pronto Electronic Ltd., TEL: 44-1-5546222
Intl **Farsta Skondal**
Nordisk Electronik AB, TEL: 46-8-635040
Intl **Finland, Helsinki**
OY Fintronic AB, TEL: 358-90-6926022
Intl **France, Rungis Cedex**
Newtek S.A.R.L., TEL: 33-1-560-5574
Intl **Germany, Quickborn**
Astek GmbH, TEL: 49-4106-71084
Intl **Germany, Unterhaching**
Metronik GmbH, TEL: 49-89-6114063
Intl **Israel, Tel Aviv**
Talviton Electronics, TEL: 44452, 455626
Intl **Italy, Milano**
Dott. Ing. Giuseppe De Mico s.p.a., TEL: 33-02952-0551
Intl **Japan, Tokyo**
Tomen, TEL: 03-506-3473
Intl **Netherlands, Ad Nuenen**
Semicon B.V-, NL-5672, TEL: 31-40-838009
Intl **Norway, Hvalstad**
Nordisk Electronik A/S, TEL: 47-2-846210

Cypress Semiconductor (Cont)

Intl	**Spain, Madrid**	Comelta S. A., TEL: 34-1-754-3001
Intl	**Switzerland, Zurich**	Baerlocher AG, TEL: 41-1-429900
Intl	**Taiwan, Taipei**	Prospect, TEL: (02) 7219533-7

Distributors

AL	**Huntsville**	Huntsville Division, 205-881-9235
AZ	**Tempe**	Phoenix Division, 602-968-6181
CA	**Canoga Park**	Los Angeles Division, 818-999-5001
CA	**Irvine**	Irvine Division, 714-660-0951
CA	**Milpitas**	San Francisco Division, 408-943-4600
CA	**Rancho Cordova**	Sacramento Division, 916-635-9700
CA	**San Diego**	San Diego Division, 619-578-9600
CA	**San Jose**	Cypress Electronics, 408-945-8400
CO	**7000 North Broadway;Denver**	Denver Division, 303-427-1818
CT	**5 Higgins Dr., Milford**	Falcon Elctrns., 203-878-5272
CT	**Wallingford**	Connecticut Division, 203-265-3822
FL	**Ft. Lauderdale**	Ft. Lauderdale Sales Office, 305-928-0661
FL	**Orlando**	Orlando Division, 305-841-1878
GA	**Norcross**	Atlanta Division, 404-923-5750
IL	**Schaumburg**	Chicago Division, 312-490-0155
IN	**Indianapolis**	Indianapolis Division, 317-297-0483
KS	**Lenexas**	Kansas City Division, 913-492-3121
MD	**Gaitnersburg**	Maryland Division, 301-840-9450
MA	**100 Pennsylvania Ave., Framington**	, 617-626-2128
MA	**Burlington**	Boston Division, 617-272-8200
MI	**Livonia**	Michigan Division, 313-525-5850
MN	**Plymouth**	Minneapolis Division, 612-559-2211
NJ	**Fairfield**	North New Jersey Division, 201-882-0320
NJ	**Mt. Laurel**	Philadelphia Division, 609-234-9100
NY	**2171 Jericho Turnpike, Commack**	Falcon Elctrns., 516-462-6350
NY	**Hauppauge**	Long Island Division, 516-273-2424
NY	**Johnson City**	Binghamton Division, 607-798-1611
NY	**Rochester**	Rochester Division, 716-235-7620
NC	**Raleigh**	Raleigh Division, 919-878-9882
OH	**Dayton**	Dayton Division, 513-236-8088
OH	**Solon**	Cleveland Division, 216-248-1788
OR	**Beaverton**	Portland Division, 503-644-5050
PA	**Pittsburgh**	Pittsburgh Sales Office, 412-963-0441
TX	**Austin**	Austin Division, 512-837-1991
TX	**Carrollton**	Marshall Industries, 214-233-5200
TX	**Houston**	Houston Division, 713-789-6600
UT	**Salt Lake City**	Salt Lake City Sales Office, 801-261-0901
WA	**Bellevue**	Seattle Division, 206-747-9100
WI	**Brookfield**	Milwaukee Sales Office, 414-797-8400
Can	**Montreal**	Semad, 514-636-4614
Can	**Ottawa**	Semad, 613-729-6145
Can	**Toronto**	Semad, 416-475-3922
Can	**Vancouver**	Semad, 604-438-2515

Daisy Systems

Daisy Systems
700 Middlefield Road
Mt. View, California 94039-7006
415-960-6746
TELEX: 858262

Specific product information:
Field Sales Office
Application engineering:
Field Sales Office
Literature:
1-800-556-6661; Inside Ca: 1-800-824-2385
Price and delivery:
Field Sales Office
Place an order:
Field Sales Office
All other information:
Marilee Pantalon 415-960-0123

Sales Office & Representatives

CA	**Mt. View**	Daisy Systems, 415-960-6746
CA	**Woodland Hills**	Daisy Systems, 818-716-0533
IL	**Oak Brook**	Daisy Systems, 312-789-6006
MA	**Waltham**	Daisy Systems, 617-890-2666
TX	**Irving**	Daisy Systems, 214-258-1966
Intl	**England, Hampshire**	Daisy Systems Corporation, TEL: 256-464061

Dasoft

Dasoft Designs Systems, Inc.
2550 Ninth St., No. 113
Berkeley, California 94710
415-486-0822

Data I/O

Data I/O Futurenet
10525 Willows Road N.E.
Redmond, Washington 98073-9746
206-881-6444
800-426-1045
TELEX: FAX: 206-882-1043

Sales Office & Representatives

AL	**Huntsville**	Pen-Tech Associates, Inc., 205-881-9298
AZ	**Phoenix**	Data I/O Futurenet, 602-230-9114
AZ	**Phoenix**	Zeus Electronics, Inc., 1-800-528-4512, 602-263-6022
CA	**Costa Mesa**	Data I/O Futurenet, 714-662-1182
CA	**Santa Clara**	Data I/O Futurenet, 408-727-0641
CO	**Denver**	Zeus Electronics, Inc., 1-800-521-4512, 303-321-4246
FL	**Casselberry**	Pen-Tech Associates, Inc., 305-678-6809
FL	**Deerfield Beach**	Pen-Tech Associates, Inc., 305-421-4989
FL	**Maitland**	Data I/O Futurenet, 305-660-8610
GA	**Marietta**	Pen-Tech Associates, Inc., 404-424-1931
GA	**Norcross**	Data I/O Futurenet, 404-662-8196
IL	**Deerfield**	Torkelson Associates, 312-945-8700
IL	**Park Ridge**	Data I/O Futurenet, 312-698-6810
IN	**Indianapolis**	Torkelson Associates, 317-244-7867
IA	**Cedar Rapids**	Torkelson Associates, 319-373-0200
MD	**Cockeysville**	Scientific Associates, Inc., 301-321-1411, 301-666-5223
MI	**Livonia**	Electro Sales Associates, 313-474-7320
MI	**Portage**	Electro Sales Associates, 616-323-2416
MN	**Minneapolis**	Torkelson Associates, 612-835-2414
MO	**Blue Spring**	Palatine Engineering & Sales, 816-229-4007
MO	**Hazelwood**	Palatine Engineering & Sales, 314-839-0800
NH	**Nashua**	Data I/O Futurenet, 603-889-8511
NJ	**Pennsauken**	Scientific Associates, Inc., 609-662-5222
NM	**Albuquerque**	Zeus Electronics, Inc., 1-800-528-4512, 505-842-6633
NY	**DeWitte**	DB Associates, 315-446-0220
NC	**Greensboro**	Pen-Tech Associates, Inc., 919-852-6000
OH	**Chesterland**	Electro Sales Associates, 216-729-0190
OH	**Dayton**	Electro Sales Associates, 513-426-5551
OK	**Tulsa**	Testech, Inc., 918-665-7788
OR	**Beaverton**	Northwest Test & Measurement, 503-646-9966
PA	**Allison Park**	Electro Sales Associates, 412-487-3801
TX	**Austin**	Testech, Inc., 512-327-7033
TX	**Houston**	Testech, Inc., 713-956-0837
TX	**Richardson**	Data I/O Futurenet, 214-235-0044
TX	**Richardson**	Testech, Inc., 214-644-5010
UT	**Salt Lake City**	Zeus Electronics, Inc., 801-534-0500, 801-534-0503
VA	**Fairfax**	Scientific Associates, Inc., 703-385-0600
VA	**Rosslyn**	Data I/O Futurenet, 703-247-1780

Data I/O (Cont)

WA **Redmond**
Data I/O Futurenet, 206-881-6444, 1-800-426-1045

WA **Redmond**
Northwest Test & Measurement, 206-881-8857

WI **Waukesha**
Torkelson Associates, 414-784-7736

Data Translation

Data Translation, Inc.
100 Locke Drive
Marlboro, Massachusetts 01752
617-481-3700
TELEX: 951-646

Specific product information:

Price and delivery:
See Product Information

Place an order:
See Product Information

Sales Office & Representatives

Intl **Belgium, Brussels**
C.N. Rood A.S., TEL: (32) (2) 735-2135

Intl **Chile, Santiago**
Interlog, TEL: (2) (2) 25-3689

Intl **England, Wokingham, Berks**
Data Translation LTD., TEL: (44) 0734-793838

Intl **Finland, Helsinki**
Turion OY, TEL: (358) (0) 372-144

Intl **France, Meudon La Foret**
Sacasa, TEL: (33) (1) 630-6839

Intl **India, Bombay**
Sapphire Innovators, TEL: (30) (1) 361-4300

Intl **Italy, Milano**
Eledra S.P.A., TEL: (39) (2) 34-9751

Intl **Japan, Tokyo**
ASR Intl., TEL: (81) (3) 502-5550

Intl **Japan, Tokyo**
Takachiho Koheki Co, TEL: (81) (3) 355-1111

Intl **Netherlands, Rijswijk**
C.N. Rood B.V., Cort v.d. Lindenstraat, TEL: (31) (70) 99-6360

Intl **Norway, Torshov Oslo**
Elektronix A/S, TEL: (47) (2) 56-7140

Intl **Portugal, Lisbon**
Ditram Componentes E. Electronica, Lda., TEL: (351) (1) 545313

Intl **Singapore**
General Engineers Corp. Pte., TEL: (65) 271-3163

Intl **South Africa, Pretoria**
Elctrns. Building Elements Pty. LTD., TEL: (27) (12) 46-9221

Intl **Spain, Madrid**
Instrumatic, TEL: (34) (1) 455-8112

Intl **Sweden, Spings**
Scancopter AB, TEL: (46) (8) 761-7820

Intl **Switzerland, Geneva**
Instrumatic SA, TEL: (41) (1) 723-1410

Intl **Switzerland, Zurich**
Instrumatic AG, TEL: (41) (22) 36-0830

Intl **Taiwan, Taipei**
A-Tek Enterprises Co., TEL: (86) (2) 721-7864

Intl **West Germany, Puchheim**
Stemmer Elektronik, TEL: (49) (89) 80-9020

Datel

Datel
11 Cabot Blvd.
Mansfield, Massachusetts 02048
617-339-9341
TELEX: 951340
TWX: 710-346-1953

Specific product information:
Tom Hospod .... ext. 257
Bob Leonard .... ext. 141
Gino Vieira .... ext. 221

Application engineering:
Tom Hospod .... ext. 257
Bob Leonard .... ext. 141
Gino Vieira .... ext. 221

Literature:
Literature "Hot Line" .... ext. 100

Price and delivery:
Ellen Dore

Follow-up an order:
Bill Hager

Sales Office & Representatives

AL **Huntsville**
Electronic Manufacturers' Agent, 205-830-4030, 800-633-2920

AZ **Phoenix**
Tech. Sales, Inc., 602-246-1614

CA **Los Angeles**
Datel, 213-933-7256

CA **Mt. View**
Intectra, 415-967-8818

CA **Santa Ana**
Datel, 714-835-2751

CA **Sunnyvale**
Datel, 408-733-2424

CO **Denver**
Elcom Inc., 303-337-2300

CT **Hamden**
J.B.L. Assocs., 203-281-3161

FL **Coral Springs**
H. A. Inc., 305-752-7520

GA **Roswell**
Electronic Manufacturers Agents, 404-992-7240

HI **Honolulu**
Adtech, Inc., 808-941-0708

IL **Elmhurst**
Sector Engrg. Sales, Inc., 312-530-7850

IN **Indianapolis**
Sector Engrg. Sales, Inc., 317-842-1120

IA **Davenport**
Ensco Rep. Inc., 319-386-6600

KS **Overland Park**
ENSCO-REP, Inc., 913-381-7557

KS **Wichita**
ENSCO-REP, Inc., 316-683-1070

MA **Mansfield**
Datel, 617-339-9341

MI **Livonia**
Electro Sales Assoc., 313-474-7320

MI **Portage**
Electro Sales Assoc., 616-323-2416

MN **Minneapolis**
Professional Sales for Industry, 612-944-8545

MO **Maryland Heights**
ENSCO-REP, Inc., 314-423-3935

NJ **Perth Amboy**
ASTROREP, Inc., 201-826-8050

NM **Albuquerque**
Cleveland Entprs., Inc., 505-265-7893

NY **Babylon**
Astrorep, Inc., 516-422-2500

NY **Liverpool**
R&D Assocs., Inc., 315-457-0100

NY **New York**
C.A. Int'l. Export & Import, 212-925-253

OH **Cleveland**
Instrmn. Sys., 216-845-8800

OH **Dayton**
Instrmn. Sys., 513-294-2838

OR **Portland**
Tasco, Inc., 503-245-8168

PA **Glenside**
Wyncote Instrmn. Co., 215-572-6500

PA **Pittsburgh**
Instrmn. Sys., 412-823-7005

TX **Austin**
Technical Mktg., Inc., 512-835-0064

TX **Carrollton**
Technical Mktg., Inc., 214-387-3601

TX **Houston**
Technical Mktg., Inc., 713-783-4497

UT **Salt Lake City**
Elcom Inc., 801-485-7415

VA **Arlington**
H. J. Heffernan Co., 703-522-6666

WA **Bellevue**
Tasco, Inc., 206-453-1414

WI **Milwaukee**
Sector Engrg. Sales, Inc., 414-352-8280

Can **Calgary, Alberta**
Future Elctrns., 403-235-5325

Can **Downsview, Ontario**
Future Elctrns., 416-638-4771

Can **Downsview, Ontario**
M&K Electronics, 416-531-8235

Can **Edmonton, Alberta**
Future Elctrns., 403-486-0974

Can **Montreal, Quebec**
Future Elctrns., 514-694-7710

Can **Ottawa, Ontario**
Future Elctrns., 613-820-8313

Can **Vancouver, British Columbia**
Future Elctrns., 604-438-5545

Can **Winnipeg, Manitoba**
Future Electronics, 204-339-0554

Intl **Australia, Adelaide**
Elmeasco Instruments Pty. Ltd., TEL: (08) 271-1830

Intl **Australia, Brisbane**
Elmeasco Instruments Pty. Ltd., TEL: (07) 369-8688

Intl **Australia, Concord N.S.W.**
Elmeasco Instrs. Pty. Ltd., TEL: 02-7362888

Intl **Australia, Gosnells**
Elmeasco Instruments Pty. Ltd., TEL: (09) 398-3362

Intl **Austria, Landstrasse**
Othmar Lackner, TEL: 222-752618

Intl **Belgium, Brussels**
Master Chips, TEL: 219-58 62

Intl **Denmark, Kokkedal**
C-88 APS, TEL: 2-244888

Intl **Finland, Expoo**
Kauko Markkinat, TEL: 358-05211

Intl **France, Saint Cloud**
Datel, TEL: 602-5711

Intl **Germany, Berlin**
Datel, TEL: 805-2506

Intl **Germany, Frankfurt**
Datel, TEL: 06182 7115

Intl **Germany, Hannover**
Datel, TEL: (0521) 39-22-00

Intl **Germany, Muenchen**
Datel, TEL: 089 530741

Intl **Greece, Piraeus**
General Electronics, Ltd., TEL: 491-3591

Intl **Hong Kong, Hong Kong**
Schmidt & Co., TEL: 5-8330222

Intl **Hong Kong, Kowloon**
Electronic Components, TEL: 3-315223

Intl **Hong Kong, Kowloon**
GE (USA) Semiconductor, TEL: 3-721-4286

Intl **Hong Kong, Kowloon**
Tektron Electronic, TEL: 3-856199

Intl **Iceland, Grettisgata**
Sameind HF, TEL: 91-21366

Datel (Cont)

Intl **India, Bombay**
Kaytronics Electronics Eng., TEL: 36-4450
Intl **India, Secunderabad**
Kaytronics Electronics Eng., TEL: 77924
Intl **Indonesia, Singapore**
Francotone Electronics, TEL: 297-0818
Intl **Israel, Tel Aviv**
STG Intl. Ltd., TEL: 248231
Intl **Italy, Milano**
3G Elctrns. S.R.L., TEL: 5455951
Intl **Japan, Osaka**
Datel, TEL: Telex 06-354-2025
Intl **Japan, Tokyo**
Datel, TEL: 779-1031
Intl **Korea, Seoul**
Tess-Ko, TEL: 754-2454
Intl **Kuwait, Safat**
Al-Khaldiya Trading & Contracting, TEL: 414910;411726
Intl **New Zealand, Auckland**
David Reid Ltd., TEL: 488-049
Intl **Norway, Skedsmokorset**
B.T. Hitech A.S., TEL: 749330
Intl **Pakistan, Dilusha Chambers**
Sayyadain Limited, TEL: 74764
Intl **Singapore**
Francotone Elctrns. Ltd., TEL: 297-0818
Intl **South Africa, Hazlewood**
Electronic Building Elements, TEL: 46-9221
Intl **Spain, Madrid**
Vector Espana S.A., TEL: 248-2565
Intl **Sweden, Hagersten**
Martinsson & Co. AB, TEL: 08-7440300
Intl **Switzerland, Riedstrasse**
Ineltro AG, TEL: 01-7414121
Intl **Taiwan, Taipei**
Sertek International, TEL: 501-0055
Intl **Thailand, Bangkok**
Measuretronix, TEL: 3143369;3143439
Intl **United Kingdom, England, Hampshire**
Datel, TEL: (256) 69085, 6, 7, 8, 9

Datricon

Datricon Corporation
16398 SW 72nd Ave.
Portland, Oregon 97224
800-843-8723

Davidge Corporation

Davidge Corporation
292 E. Highway 246
P. O. Box 1869
Buellton, California 93427
805-688-9598
TELEX: Intertel 29-5298 Account 1169

Dense-Pac

Dense-Pac Microsystems, Inc.
7321 Lincoln Way
Garden Grove, California 92641
714-898-0007

Sales Office & Representatives

AL **Huntsville**
The Novus Group, 205-881-2207
CA **Sunnyvale**
Electec Sales, 408-747-1722
GA **Lilburn**
The Novus Group, 404-381-1015
IL **Hoffman Estates**
Micro-Tex, 312-382-3001
IN **Ft. Wayne**
Scott Electronics, 219-484-7865
IN **Indianapolis**
Scott Electronics, 317-897-9976
MD **Pasadena**
Logical Technology, 301-437-7400
MN **Minneapolis**
Dan'l Engineering, 612-854-7550
MO **St. Louis**
Ozark Electronics, 314-423-7200
NJ **Paramus**
Eltech Sales, 201-967-1309
NY **Yonkers**
Eltech Sales, 914-237-0845
NC **Raleigh**
The Novus Group, 919-872-3966
OH **Cincinnati**
Scott Electronics, 513-791-2513
OH **Cleveland**
Scott Electronics, 216-473-5050
OH **Dayton**
Scott Electronics, 513-294-0539
OH **Reynoldsburg**
Scott Electronics, 614-863-1281
PA **Pittsburgh**
Scott Electronics
PA **Sanatoga**
Ottawa Electronics, 215-327-2445
TX **Addison**
Robert Thomas Co., 214-233-8235
WA **Bellevue**
Systems Technical Sales
WI **Waukesha**
Micro-Tex, 414-542-5352
Can **Rexdale, Ontario**
Techtrek, 416-674-1717

Dexter Research Center

Dexter Research Center, Inc.
7300 Huron River Drive
Dexter, Michigan 48103
313-426-3921

Digital Equipment

Digital Equipment Corporation
77 Reed Road
Hudson, Massachusetts 01749
617-568-4000

Digitek

Digitek Inc.
P.O. Box 468
Kenmore, Washington 98028
206-485-6571

Dionics

Dionics Inc.
65 Rushmore Street
Westbury, New York 11590
516-997-7474
TWX: 510-222-0974

Distributed Computer Systems

Distributed Computer Systems
330 Bear Hill Road
Waltham, Massachusetts 02154
617-890-8200

Diversified Technology

Diversified Technology Inc.
P.O. Box 465, 112 East State Street
Ridgeland, Mississippi 39157
601-856-4121

Drafting Dynamics

Drafting Dynamics
4615 Industrial St., Ste. 1H
Simi Valley, California 93063
818-348-2532

dy-4 Systems Inc.

dy-4 Systems Inc.
888 Lady Ellen Place
Ottawa, Ontario K1Z 5M1
613-728-3711

Dysys Inc.

Dysys Inc.
5670 Spring Garden Road
Halifax, Nova Scotia B35 1H6
902-423-5308

EG&G Reticon

EG&G Reticon Corporation
345 Potrero Avenue
Sunnyvale, California 94086-4197
408-738-4266
TWX: 910-339-9343

Specific product information:
See Appl. Eng.
Application engineering:
Cameras .... Hal Schroeder
Analog .... Greeg Herbison
Image Sensor .... Jerry Holcomb
Literature:
Sales Service Dept.
Price and delivery:
Sales Service Dept.
Follow-up an order:
Sales Service Dept.

Sales Office & Representatives

AL **Huntsville**
Electronic Mfg's Agents, Inc. (E.M.A.), 205-830-4030
CA **Glendale**
Orion Sales, 818-240-3151
CA **Tustin**
Orion Sales, 714-832-9687
CT **Stratford**
Gerald Rosen Co., Inc., 203-375-5456
FL **Brandon**
R.C. Simon & Co., Inc., 813-689-6524
FL **Lighthouse Point**
R.C. Simon & Co., Inc., 305-941-2757
FL **Melbourne**
R.C. Simon & Co., Inc., 305-254-6780

EG&G Reticon (Cont)

GA **Roswell**
E.M.A., 404-992-7240

IL **Elk Grove Village**
Central Regional Sales, 312-640-7713

MA **Framingham**
Gerald Rosen Co., Inc., 617-879-5505

MA **Salem**
Eastern Regional Sales, 617-745-7400

MA **Winston-Salem**
E.M.A., 919-784-7304

MI **Detroit**
Rathsburg Assocs., Inc., 313-882-1717

MN **Eden Prairie**
High Technology Sales, 612-944-7274

MO **Blue Springs**
Palatine Eng. & Sales, Inc., 816-229-4007

MO **Hazelwood**
Palatine Eng. & Sales, Inc., 314-839-0800

NJ **Cedar Knolls**
Technical Applications & Mktg. (T.A.M.), 201-285-9094

NY **S. Hauppauge**
Technical Applications & Mktg. (T.A.M.), 516-348-0800

NC **Pineville**
E.M.A., 704-541-2628

OH **Beachwood**
Thompson & Assocs., 216-831-6277

OH **Dayton**
Thompson & Assocs., 513-435-7733

OH **Orient**
Thompson & Assocs., 614-272-2086

TX **Dallas**
Lelko Paulsen Sales, 214-680-9588

Can **Nepean, Ontario**
Ellam & Assocs., 613-224-1720, 613-727-3892

Distributors

Intl **Australia, Victoria**
Toal Electronics, TEL: (03) 288-4044

Intl **Austria, Wien**
Othmar Lackner, TEL: (0222) 752618

Intl **Belgium, Bruxelles**
Inelco, TEL: (02) 216-0160

Intl **Denmark, Copenhagen**
Semiconductor Supply A/S, TEL: (01) 83 50 90

Intl **Eastern Europe, Taufkirchen**
Opteltec, Div. Neumuller GmbH, TEL: (089) 6118-0

Intl **England, Wokingham**
EG&G Reticon, TEL: (0734) 788666

Intl **Finland, Espoo**
Instrumentarium Oy, TEL: (3580) 5281

Intl **France, Le-Buisson Cedex**
Valdix, TEL: (6) 920-26-06

Intl **Germany, Munich**
EG & G Reticon, TEL: (089) 92 692-666

Intl **Hong Kong, WanChai**
Schmidt & Co. (HK) Ltd., TEL: 5-8330222

Intl **India, Bombay**
Zenith Electronics, TEL: 202 9464, 202 7887

Intl **Israel, Tel Aviv**
Telsys Ltd., Elctrn. Engrg., TEL: 494891-5

Intl **Italy, Milano**
Eledra 3S SPA, TEL: (02) 34 97 51

Intl **Italy, Roma**
Eledra Sud, TEL: (06) 812-73 24

Intl **Japan, Tokyo**
Tokyo Electron Ltd., TEL: 03-343-4411

Intl **Korea, Seoul**
J-Tek Corp., TEL: 782-8039, 782-8049

Intl **Mt. View, CA**
Fegu Inc., TEL: 415-961-2380

Intl **Netherlands, Postbus**
Koning En Hartman, TEL: 015-609906

Intl **New Zealand, Auckland**
Professional Electronics Ltd., TEL: 493-029

Intl **Norway, Hvalstad**
Nordisk Elektronik (Norge) A/S, TEL: (02) 846210

Intl **South Africa, Pretoria**
Electronic Bldg., TEL: 012-469221

Intl **Spain, Madrid**
Amitron, TEL: (91) 248-79 59

Intl **Sweden, Huvudstagatan**
Ingenjorsfirman Nordisk, TEL: 4687349770

Intl **Switzerland, Zurich**
Industrade AG, TEL: (01) 830-5040

Intl **Taiwan, Taipei**
Mitac Corp., TEL: 02-501-8231

E/Z CAD

E/Z CAD
5589 Starcraft Dr.
San Jose, California 95123
415-582-2009

ECAD

ECAD
2455 Augustine Dr.
Santa Clara, California 95054
408-727-0264

Elantec

Elantec, Inc.
1996 Tarob Court
Milpitas, California 95035
408-945-1323
outside CA 800-832-7429
TWX: 910-997-0649

Sales Office & Representatives

AL **Huntsville**
DTM, Inc., 205-882-6706

AZ **Scottsdale**
Tusar, 602-998-3688

CA **Culver City**
Bestronics, Inc., 213-870-9191

CA **Irvine**
Bestronics, Inc., 714-261-7233

CA **San Diego**
Bestronics, Inc., 619-693-1111

CA **San Jose**
Custom Technology Sales, 408-252-9901

CA **Woodland Hills**
Bestronics, Inc., 818-704-5616

CO **Wheat Ridge**
Waugaman Associates, Inc., 303-423-1020

CT **Meriden**
Advanced Component Sales, 203-238-6891

FL **Altamonte Springs**
Lawrence Associates, 305-339-3855

FL **Boca Raton**
Lawrence Associates, 305-368-7373

FL **Clearwater**
Lawrence Associates, 813-584-8110

FL **Destin**
DTM, Inc., 904-288-2201

FL **W. Melbourne**
Lawrence Associates, 305-724-8294

GA **Norcross**
DTM, Inc., 404-447-6832

IL **Arlington Heights**
Micro Sales, Inc., 312-956-1000

IN **Carmel**
Shamrock Electronic Sales, 317-848-5265

IA **Hiawatha**
Gassner & Clark, 319-393-5763

MD **Baltimore**
Stemler Associates, 301-944-8262

MA **Burlington**
Advanced Technical Sales, 617-272-0100

MN **Eden Prairie**
High Technology Sales, 612-944-7274

MO **Grandview**
R.R. Burton & Associates, 816-763-5385

MO **St. Louis**
John G. Macke Company, 314-432-2830

NJ **Cherry Hill**
Stemler Associates, 609-966-4070

NJ **Glen Rock**
North East Components, 201-447-0600

NY **Rochester**
Ossman Component Sales, 716-424-4460

NY **Syracuse**
Ossman Component Sales, 315-437-7052

NY **Vestal**
Ossman Component Sales, 607-754-3264

NC **Raleigh**
DTM, Inc., 919-878-0909

OH **Beachwood**
Electronic Salesmasters, 216-831-9555

OR **Oloha**
Micro Sales, Inc., 503-642-1818

PA **Ben Salem**
Stemler Associates, 215-638-4850

TX **Austin**
Sundance Sales, 512-339-6611

TX **Houston**
Sundance Sales, 713-772-4988

TX **Plano**
Sundance Sales, 214-867-0592

UT **Salt Lake City**
Waugaman Associates, Inc., 801-261-0802

WA **Bellevue**
Micro Sales, Inc., 206-451-0568

WI **Menomonee Falls**
Micro Sales, Inc., 414-251-0151

Can **Ontario**
Microscape Electronics, 416-495-0778

Can **Vancouver, B.C.**
Davetek Marketing, 604-430-3680

Distributors

AZ **Phoenix**
Wyle Elect. Mktg. Grp., 602-249-2232

CA **Agoura Hills**
Wyle Elect. Mktg. Grp., 818-880-9000

CA **Anaheim**
Zeus, 714-632-6880

CA **Irvine**
Wyle Elect. Mktg. Grp., 714-863-1611

CA **Irvine**
Wyle Elect. Mktg. Grp. (Mil), 714-851-9953

CA **Los Angeles**
Wyle Elect. Mktg. Grp., 213-322-8100

CA **Sacramento**
Wyle Elect. Mktg. Grp., 916-638-5282

CA **San Diego**
Wyle Elect. Mktg. Grp., 619-565-9171

CA **San Jose**
Zeus, 408-998-5121

CA **Santa Clara**
Wyle Elect. Mktg. Grp., 408-727-2500

CO **Denver**
Wyle Elect. Mktg. Grp., 303-457-9953

CT **Orange**
Milgray Electronics, 203-795-0711

FL **Ft. Lauderdale**
Hammond Electronics, 305-973-7103

FL **Orlando**
Hammond Electronics, 305-849-6060

FL **Oviedo**
Zeus, 305-365-3000

GA **Atlanta**
Hammond Electronics, 404-449-1996

Elantec (Cont)

GA **Atlanta**
Milgray Electronics, 404-393-9666
KS **Overland Park**
Milgray Electronics, 913-236-8800
MD **Columbia**
Zeus, 301-997-1118
MD **Rockville**
Milgray Electronics, 301-468-6400
MA **Lexington**
Zeus, 617-863-8800
MA **Norwood**
Gerber Electronics, 617-769-6000
NJ **Fairfield**
Nu Horizons Electronics, 201-882-8300
NJ **Marlton**
Milgray Electronics, 609-983-5010
NY **Farmingdale**
Milgray Electronics, 516-420-9800
NY **Farmingdale**
Nu Horizons Electronics, 516-694-2500
NY **Patterson**
Intercept Electronics, 914-878-3355
NY **Pittsford**
Milgray Electronics, 716-385-9330
NY **Port Chester**
Zeus, 914-937-7400
NC **Greensboro**
Hammond Electronics, 919-275-6391
OH **Cleveland**
Milgray Electronics, 216-447-1520
OR **Portland**
Wyle Elect. Mktg. Grp., 503-640-6000
SC **Greenville**
Hammond Electronics, 803-233-4121
TX **Austin**
Wyle Elect. Mktg. Grp., 512-834-9957
TX **Dallas**
Wyle Elect. Mktg. Grp., 214-235-9953
TX **Richardson**
Zeus, 214-783-7010
UT **Salt Lake City**
Wyle Elect. Mktg. Grp., 801-974-9953
WA **Seattle**
Wyle Elect. Mktg. Grp., 206-453-8300
Intl **Denmark**
E. V. Johanssen Elektronik, TEL: 45-1-83-90-22
Intl **England**
Manhattan Skyline Ltd., TEL: 44-628-75851
Intl **France**
Reptronic SA, TEL: 33-6-928-8700
Intl **France**
Scientech, TEL: 33-1-609-9136
Intl **Holland**
Auremia, TEL: 31-40-816565
Intl **Israel**
Vectronics, TEL: 972-525-56070
Intl **Italy**
Murata Erie Elettronica, TEL: 39-2-607-37-86
Intl **Japan**
Internix, Inc., TEL: 81-3-369-1101
Intl **Latin America, Mexico, So. America, India, Australia, New Zealand, Africa, Turkey**
California Microsystems, Inc., TEL: 805-522-9977
Intl **Sweden**
Svensk Teleimport AB, TEL: 46-8-890265
Intl **Switzerland**
Datacomp, TEL: 41-1-730-2165
Intl **Taiwan**
Galaxy Far East, TEL: 886-2-7811895-7
Intl **West Germany**
Bitronic, TEL: 49-89-496001-05

Electrical Engineering Software

Electrical Engineering Software, Inc.
4675 Stevens Creek Blvd., No. 101
Santa Clara, California 95051
408-296-8151
Specific product information:
Kevin Walsh

Electronic Software Products

Electronic Software Products
18013 Sky Park Circle, Ste. C
Irvine, California 92714
714-261-1777

Eltec Microsystems

Eltec Microsystems
Box 9308
Shreveport, Louisiana 71139
318-636-0563

Emulogic

Emulogic Inc.
Three Technology Way
Norwood, Massachusetts 02062
617-329-1031
TWX: 710-336-5908

Energy Sciences

Energy Sciences Corp.
Electronics Group
13456 S.E. 27th Place
Bellevue, Washington 98005
206-881-2661

Enterprise Systems

Enterprise Systems Corp.
P. O. Box 698
Dover, New Hampshire 03820
603-742-7363

ETI

ETI Corporation
ETI Micro Division
6918 Sierra Court
Dublin, California 94568
415-829-6600

Exar

Exar Corporation
750 Palomar Avenue, P.O. Box 3575
Sunnyvale, California 94088-3575
408-732-7970
TWX: 910-339-9233

Sales Office & Representatives

AL **Huntsville**
Rep, Inc., 205-881-9270
AZ **Scottsdale**
Summit Sales, 602-998-4850
CA **Los Angeles**
Landa/Minyard, 213-879-0770
CA **Mtn. View**
Fegu, 415-961-2380
CA **San Diego**
Harvey King, 714-587-9300
CA **San Jose**
Tripar, 408-280-5744
CA **Santa Ana**
Landa/Minyard, 714-543-7805
CO **Golden**
Candal Inc., 303-233-0155
CT **Ridgefield**
Phoenix Sales, 203-438-9644
FL **Orlando**
Donato & Assoc., Inc., 305-522-2200
FL **Palm Harbor**
Donato & Assoc., Inc., 305-352-0727
GA **Tucker**
Rep, Inc., 404-938-4358
IL **Itasca**
Janus, Inc., 312-298-9330
KS **Overland Park**
Jim Moore & Assoc., 913-381-2225
MD **Baltimore**
Comp. Sales, Inc., 301-484-3647
MA **Westwood**
Mass Tech Sales, 617-329-8820
MI **Grand Rapids**
R. P. Urban & Assoc., 616-245-0516
MN **Minneapolis**
Dan'l Engrg., 612-854-7550
MO **Hazelwood**
Jim Moore & Assoc., 314-731-2401
NJ **Pennsauken**
Vantage Sales Co., 609-663-6660
NM **Albuquerque**
Syntech, 505-266-7951
NY **Buffalo**
Quality Comps., 716-837-5430
NY **Great Neck**
Trionic Assocs., 516-466-2300
NY **Manlius**
Quality Comps., 315-682-8885
NC **Raleigh**
Zucker Assocs., 919-782-8433
OH **Columbus**
McFadden Sales, 614-459-1280
OR **Portland**
Components West, 503-684-1671
TN **Jefferson City**
Rep, Inc., 615-475-4105
TX **Austin**
Tech. Mktg., 512-835-0064
TX **Carrollton**
Tech. Mktg., 214-387-3601
TX **Houston**
Tech. Mktg., 713-777-9228
WA **Liberty Lake**
Components West, 509-255-6224
WA **Redmond**
Components West, 206-885-5880
WI **Milwaukee**
Janus, Inc., 414-476-9104
Can **Brampton, Ontario**
Clark Hurman Assoc., 416-453-1118
Can **Nepean, Ontario**
Clark Hurman Assoc., 613-269-3565
Intl **Australia, Burwood**
Trionic Bits, TEL: 587-2257
Intl **Australia, Melbourne**
Total Elctrns., TEL: 288-4404
Intl **Brazil, Sao Paulo**
ROHM Do Brasil Industria Elctrna. Ltda., TEL: 55 11 421-4577
Intl **Denmark, Horsholm**
Mer-el A/S, TEL: 571000
Intl **Finland, Espoo**
Yleiselektroniikka/oy, TEL: 90-452-1255
Intl **France, Cedex**
Valdix, Le Buisson

Exar (Cont)

Intl **Greece, Piraeus**
General Elctrns. Ltd., TEL: 49 13 595
Intl **Hong Kong, Kowloon**
ROHM Elctrns. (H.K.) Co., Ltd., TEL: 3-343481
Intl **Italy, Milano**
Eledra 3S S.p.A., TEL: 34.93.041
Intl **Japan, Tokyo**
Tokyo Electron Ltd., TEL: 03-343-4411
Intl **Korea, Seoul**
Hanaro Corp., TEL: (02) 784-1144
Intl **Netherlands, Amsterdam**
Nijkerk Elek., TEL: 020-462221
Intl **New Zealand, Auckland**
Professional Elctrns. Ltd., TEL: 46 9450
Intl **Norway, Oslo**
Hefro Teknisk A/S, TEL: 30 0286
Intl **Singapore, Singapore**
ROHM Elctrns. Co. Pte. Ltd., TEL: 7459342
Intl **South Africa, Sandtown**
Alpha Centary, TEL: (011) 787-4680
Intl **South Africa, Transvaal**
South Continental Devices (Pty.) Ltd., TEL: 48 05 15
Intl **Spain, Madrid**
Unitronics, S.A., TEL: 242 52-04
Intl **Sweden, Upplands, Vasby**
Lagercrantz Electronix AB, TEL: (0760) 86 120
Intl **Switzerland, Baden-Dattwil**
Stolz AG, TEL: 05-6840151
Intl **Tawian, Taipei, China**
Sea Union, TEL: 751-2063
Intl **Turkey, Ankara**
Testas
Intl **United Kingdom, Thame, Oxon**
Thame Comps., TEL: (084 421) 3146
Intl **West Germany, Muehlenstrasse**
ROHM Elctrns. GmbH, TEL: (02161) 6101-0

Distributors

AL **Huntsville**
Marshall Elctrns., 205-881-9235
AL **Huntsville**
Pioneer Elctrns., 205-837-9300
AL **Huntsville**
R. M. Elctrns., 205-883-4270
AL **Huntsville**
Resisticap, Inc., 205-881-9270
AZ **Phoenix**
Sterling Elctrns., 602-268-2121
AZ **Scottsdale**
Western Micro, 602-948-4240
AZ **Tempe**
Bell Inds., 602-966-7800
AZ **Tempe**
Marshall Elctrns., 602-968-6181
AR **Little Rock**
Carlton-Bates Co., 501-562-9100
CA **Anaheim**
Zeus West, Inc., 714-632-6880
CA **Canoga Pk.**
Marshall Elctrns., 818-999-5001
CA **Chatsworth**
Diplomat Elctrns., 213-341-4411
CA **Chatsworth**
JACO, 213-998-2200
CA **Costa Mesa**
Diplomat Elctrns., 714-549-8401
CA **Cupertino**
Western Microtechnology, 408-725-1664
CA **Elmonte**
Marshall Elctrns., 818-442-7204
CA **Irvine**
IEC/JACO, 714-660-1055
CA **Irvine**
Marshall Elctrns., 714-660-0951
CA **Milpitas**
Marshall Elctrns., 408-943-4600
CA **Roseville**
Bell Inds., 916-969-3100
CA **San Diego**
Bell Industries, 619-268-1277
CA **San Diego**
Diplomat Elctrns., 619-292-5693
CA **San Diego**
Marshall Elctrns., 619-478-9600
CA **Santa Ana**
VSI Elctrns. (USA) Inc., 213-299-7760
CA **Sunnyvale**
Bell Inds., 408-734-8570
CA **Sunnyvale**
Diplomat Elctrns., 408-734-1900
CA **Tustin**
A.V.E.D., 213-770-0871
CO **Denver**
Marshall Elctrns., 303-427-1818
CO **Englewood**
Diplomat Elctrns., 303-740-8300
CO **Wheatridge**
A.C.T., 303-422-9229
CO **Wheatridge**
Bell Inds., 303-424-1985
CT **Danbury**
Diplomat Elctrns., 203-797-9674
CT **East Haven**
JV Elctrns., Inc., 203-469-2321
CT **Wallingford**
Marshall Elctrns., 203-265-3822
FL **Clearwater**
Diplomat, 813-443-4514
FL **Clearwater**
Future Elctrns., 813-596-8295
FL **Fort Lauderdale**
Diplomat Elctrns., 305-974-8700
FL **Fort Lauderdale**
Hammond Elctrns., 305-973-7103
FL **Fort Lauderdale**
Marshall Elctrns., 305-928-0661
FL **Orlando**
Hammond Elctrns., 305-849-6060
FL **Orlando**
Marshall Elctrns., 305-841-1878
FL **Tampa**
Reptron, 813-855-4656
GA **Comming**
Pan American, 404-577-2144
GA **Norcross**
Diplomat Elctrns., 404-449-4133
GA **Norcross**
Marshall Elctrns., 404-923-5750
IL **Bensenville**
Diplomat Elctrns., 312-595-1000
IL **Elk Grove**
R.M. Elctrns., 312-364-6622
IL **Elk Grove Village**
GBL-Gould, 312-593-3220
IL **Hoffman Estates**
Intercomp, 312-843-2040
IL **Schaumburg**
Marshall Elctrns., 312-490-0155
IL **Schaumburg**
Reptron, 312-882-1700
IN **Carmel**
Altex Elctrns., Inc., 317-848-1323
IN **Ft. Wayne**
Graham Elctrns., 219-423-3422
IN **Indianapolis**
Graham Elctrns., 317-634-8202
IN **Indianapolis**
R. M. Elctrns., 317-247-9701
IA **Cedar Rapids**
Bell Industries, 319-395-0730
IA **Cedar Rapids**
DEECO, Inc., 319-365-7551
MD **Columbia**
Diplomat Elctrns., 301-995-1226
MD **Gaithersburg**
Marshall Elctrns., 301-840-9450
MD **Gaithersburg**
Pioneer Elctrns., 301-948-0710
MA **Burlington**
Marshall Elctrns., 617-272-8200
MA **Canton**
Almo Elctrns., 617-329-8810
MA **Norwood**
Gerber Elctrns., 617-329-2400
MA **Wilmington**
RC Components, 617-657-4310
MA **Woburn**
Diplomat Elctrns., 617-835-6611
MI **Grand Rapids**
R. M. Elctrns., 616-531-9300
MI **Livonia**
Marshall Elctrns., 313-525-5850
MI **Livonia**
Reptron Elctrns., 313-525-2700
MI **Walled Lake**
Ambur Elctrns., Inc., 313-669-3710
MN **Minneapolis**
Merit Elctrns., 612-546-5383
MN **Plymouth**
Marshall Elctrns., 612-559-2211
MO **St. Louis**
Olive Indl. Elect., 314-426-4500
NJ **Berlin**
GCI, 609-768-6767
NJ **Fairfield**
Marshall Elctrns., 201-882-0320
NJ **Mt. Laurel**
Marshall Elctrns., 609-234-9100
NJ **Totowa**
Diplomat Elctrns., 201-785-1830
NM **Albuquerque**
Bell Inds., 505-292-2700
NM **Albuquerque**
Betatron, 505-344-2318
NY **Endwell**
Marshall Elctrns., 607-754-1570
NY **Farmingdale**
S.A.I., 516-293-2710
NY **Hauppauge**
JACO, 516-273-5500
NY **Hauppauge**
Marshall Elctrns., 516-273-2424
NY **Liverpool**
Diplomat Elctrns., 315-652-5000
NY **Melville**
Diplomat Elctrns., 516-454-6400
NY **Port Chester**
Zeus Comps., Inc., 914-937-7400
NY **Rochester**
Marshall Elctrns., 716-235-7620
NC **Greensboro**
Hammond, 919-275-6391
OH **Cincinnati**
Graham Elctrns., 513-772-1661
OH **Columbus**
Reptron Elctrns., 614-436-6675
OH **Dayton**
Marshall Elctrns., 513-236-8088
OH **Salon**
Marshall Elctrns., 216-248-1788
OK **Tulsa**
Quality Comps., 918-664-8812
OK **Tulsa**
Radio, Inc., 918-587-9123
OR **Beaverton**
Marshall Elctrns., 503-644-5050
OR **Beaverton**
Western Microtechnology, 503-641-9312
OR **Lake Oswego**
Bell Inds., 503-241-4115
OR **Portland**
Radar Elec. Co., Inc., 503-233-3691
PA **Erie**
Advacom, 814-476-7774
PA **Horsham**
Pioneer Elctrns., 215-674-4000
PA **Philadelphia**
Almo Elctrns., 215-698-4000

Exar (Cont)

SC	**Greenville**	Hammond Elctrns., 803-233-4121
TX	**Addison**	Quality Comps., 214-387-4949
TX	**Austin**	Marshall Elctrns., 512-458-5654
TX	**Dallas**	Marshall Elctrns., 214-233-5200
TX	**El Paso**	E R A, 915-592-4126
TX	**El Paso**	International Elctrns., 915-598-3406
TX	**Houston**	Marshall Elctrns., 713-789-6600
TX	**Houston**	Quality Comps., 713-772-7100
TX	**Sugarland**	Quality Comps., 713-491-2255
UT	**Salt Lake City**	Bell Inds., 801-972-6969
UT	**Salt Lake City**	Diplomat Elctrns., 801-486-4134
WA	**Bellevue**	Bell Inds., 206-747-1515
WA	**Bellevue**	JACO, 206-455-2727
WA	**Bellevue**	Marshall Elctrns., 206-747-9100
WA	**Redmond**	Western Microtechnology, 206-881-6737
WA	**Seattle**	Radar Elec. Co., Inc., 206-282-2511
WI	**Berlin**	RM Elctrns., 414-784-4420
WI	**Mequon**	Taylor Elec. Co., 414-241-4321
WI	**Waukesha**	Bell Inds., 414-547-8879
Can	**Burnaby, British Columbia**	R-A-E Indl. Elctrns., 604-291-8866
Can	**Edmonton, Alberta**	Intek Elctrns., 403-347-2755
Can	**Oakville, Ontario**	L. A. Varah, 416-842-8484
Can	**Pointe Claire, Quebec**	Future Elctrns., 514-694-7710
Can	**Vancouver, British Columbia**	Intek Elctrns. Ltd., 604-324-6831
Intl	**Finland, Helsinki**	Yleiselektroniikka/oy, TEL: 90-562 1122

EXEL Microelectronics

EXEL Microelectronics, Inc.
500 Valley Way
Milpitas, California 95035
408-942-0500

Factron

Factron EDA
269 Mount Herman Rd.
Scotts Valley, California 95066
408-438-2880

Fairchild

Fairchild Semiconductor Corporation
10400 Ridgeview Court, P.O. Box 1500
Cupertino, California 95014
408-255-3700
TELEX: CORPHQ.MVAC

Specific product information:
Local field sales office or franchised distributor,
Microcontrollers Mt. View, CA 415-962-3874
Memories (Bipolar, CMOS) Puyallup, WA ... 206-841-6000
Gate Array (ECL, CMOS, Standard Cell-CMOS) Milpitas, CA 408-942-2500
Power Systems/Discretes, San Rafael, CA . 415-479-8000
Digital Logic (SSI, MSI and LSI), Bipolar, South Portland, ME 207-775-8100
Linear, Mt. View, CA 415-962-4011
Hybrid, Mt. View, CA 415-962-5500
Advanced Signal Processing, Mt. View, CA 415-962-3874
Advanced Processor, Palo Alto, CA 415-493-7250

Application engineering:
Local Field Sales or Franchised Distributor

Literature:
.... 800-554-4443
Local field sales office or franchised distributor.

Price and delivery:
Local field sales office or franchised distributor.

Place an order:
Local field sales office or franchised distributor.

All other information:
Fairchild Information Line 800-554-4443

Sales Office & Representatives

AL	**Huntsville**	Field Sales Office, 205-837-8960
AZ	**Phoenix**	Field Sales Office, 602-864-1000
CA	**Auburn**	Sales Office, 916-823-6664
CA	**Costa Mesa**	Field Sales Office, 714-241-5900
CA	**Cupertino**	Field Sales Office, 408-255-3700
CA	**Encino**	Field Sales Office, 818-990-9800
CA	**Mt. View**	Fairchild Semiconductor, Hybrid Div., 415-962-8200
CA	**San Diego**	Field Sales Office, 619-560-1332
CO	**Denver**	Field Sales Office, 303-695-4927, 303-695-4950-Disti
CT	**Woodbridge**	Field Sales Office, 203-397-5001, 203-634-8720-A&C
FL	**Fort Lauderdale**	Field Sales Office, 305-421-3000
FL	**Orlando**	Field Sales Office, 305-834-7000
GA	**Atlanta**	Field Sales Office, 404-441-2740, 404-441-2730-Disti
IL	**Chicago**	Field Sales Office, 312-773-3133
IN	**Indianapolis**	Field Sales Office, 317-849-5412
IA	**Cedar Rapids**	Field Sales Office, 319-395-0090
KS	**Kansas City**	Field Sales Office, 913-451-8374
KS	**Wichita**	Field Sales Office, 316-687-1111
MD	**Columbia**	Field Sales Office, 301-381-2500
MA	**Boston**	Field Sales Office, 617-890-4000
MI	**Detroit**	Field Sales Office, 313-478-7400
MN	**Minneapolis**	Field Sales Office, 612-835-3322
NJ	**Totowa**	Field Sales Office, 201-256-9006
NM	**Albuquerque**	Field Sales Office, 505-884-5601
NY	**Endicott**	Field Sales Office, 607-757-0200
NY	**Fairport**	Field Sales Office, 716-223-7700
NY	**Hauppauge**	Field Sales Office, 516-348-0900
NY	**Poughkeepsie**	Field Sales Office, 914-473-5730
NC	**Raleigh**	Field Sales Office, 919-848-2420
OH	**Cleveland**	Field Sales Office, 216-447-9700
OH	**Dayton**	Field Sales Office, 513-890-5813, 513-890-5878-Dist
OR	**Portland**	Field Sales Office, 503-244-6020
PA	**Willow Grove**	Field Sales Office, 215-657-2711
TX	**Austin**	Field Sales Office, 512-346-3990
TX	**Dallas**	Field Sales Office, 214-234-3811
TX	**Houston**	Field Sales Office, 713-771-3547
UT	**Salt Lake City**	Sales Office, 801-266-0773
WA	**Bellevue**	Field Sales Office, 206-455-3190
Can	**Montreal, Quebec**	Field Sales Office, 514-683-0883
Can	**Ottawa, Ontario**	Field Sales Office, 613-226-8270
Can	**Toronto, Ontario**	Field Sales Office, 416-665-5903
Intl	**Australia, Nunawading, Victoria**	Fairchild, Australia Pty Ltd., TEL: 3-877-5444
Intl	**Austria, Meidlinger Haupstrasse**	Fairchild Semiconductor GmbH, TEL: 0-222-858682
Intl	**Brazil, Sao Paulo**	Fairchild Semicondutores Ltd., TEL: 11-240-4269, 55-192-416434
Intl	**France, Montrouge**	Fairchild Semiconductor S.A., TEL: 1-746-6161
Intl	**Germany, Munich**	Fairchild Semiconductor GmbH, TEL: 089-320031
Intl	**Hong Kong, Kowloon**	Fairchild Semiconductor (HK) Ltd., TEL: 3-7238321
Intl	**Italy, Milano**	Fairchild Semiconduttori, S.P.A., TEL: 02-749-1271
Intl	**Italy, Roma**	Fairchild Semiconduttori, S.P.A., TEL: 06-328-7548
Intl	**Japan, Osaka**	Fairchild Japan Corp., TEL: 06-541-6138/9, 06-541-6138/9
Intl	**Japan, Tokyo**	Fairchild Japan Corp., TEL: 03-4008351
Intl	**Korea, Seoul**	Fairchild Semikor Ltd., TEL: 7833795, 82-2-8642411
Intl	**Netherlands, Eindhoven**	Fairchild Semiconductor, TEL: 040-446909
Intl	**Singapore, Tao Payoh**	Fairchild Semiconductor Pty. Ltd., TEL: 3370511
Intl	**Sweden, Stockholm**	Fairchild Semiconductor AB, TEL: 08-449255
Intl	**Switzerland, Zurich**	Fairchild Semiconductor GmbH, TEL: 01-3114230
Intl	**Taiwan, Taipei**	Fairchild Electronics (Taiwan) Ltd., TEL: 597-3205
Intl	**United Kingdom, Hertfordshire**	Fairchild Semiconductor Ltd., TEL: 0707 51111

Fairchild (Cont)

Intl	**West Germany, Frankfurt Main** Fairchild Semiconductor, TEL: 069-6905613
Intl	**West Germany, Hannover** Fairchild Semiconductor, TEL: 0511 17844
Intl	**West Germany, Leonberg** Fairchild Semiconductor, TEL: 07152 41026

Distributors

AL	**Huntsville** Hamilton/Avnet Electronics, 205-837-7210
AL	**Huntsville** Schweber Electronics, 205-882-2200
AZ	**Phoenix** Schweber Electronics, 602-997-4874
AZ	**Phoenix** Wyle Distribution Group, 602-866-2888
AZ	**Tempe** Hamilton/Avnet Electronics, 602-231-5100
CA	**Anaheim** Zeus Components, Inc., 714-632-6880
CA	**Chatsworth** Arrow Electronics, 818-701-7500
CA	**Chatsworth** Avnet Electronics, 818-883-0000
CA	**Costa Mesa** Avnet Electronics, 213-558-2345
CA	**Costa Mesa** Hamilton/Avnet Electronics, 714-641-1850
CA	**Costa Mesa** Sertech Laboratories, 714-754-0666
CA	**Culver City** Hamilton Electro Sales, 213-558-2121
CA	**El Segundo** Wyle Distribution Group, 213-322-8100
CA	**Hayward** Arrow Electronics, 415-487-4300
CA	**Irvine** Schweber Electronics, 714-863-0200
CA	**Irvine** Wyle Distribution Group, 714-851-9953
CA	**Irvine** Wyle Distribution Group, 714-863-9953
CA	**Rancho** Wyle Distribution Group, 916-638-5282
CA	**Sacramento** Hamilton/Avnet Electronics, 916-920-3150
CA	**San Diego** Arrow Electronics, 619-565-4800
CA	**San Diego** Hamilton/Avnet Electronics, 619-571-7527
CA	**San Diego** Wyle Distribution Group, 619-565-9171
CA	**San Jose** Schweber Electronics, 408-946-7171
CA	**Santa Clara** Wyle Distribution Group, 408-727-2500
CA	**Santa Clara** Zeus Components, Inc., 408-727-0714
CA	**Sunnyvale** Arrow Electronics, 408-745-6600
CA	**Sunnyvale** Hamilton/Avnet Electronics, 408-743-3355
CA	**Tustin** Arrow Electronics, 714-838-5422
CO	**Aurora** Arrow Electronics, 303-696-1111
CO	**Englewood** Hamilton/Avnet Electronics, 303-740-1000
CO	**Thornton** Wyle Distribution Group, 303-457-9953
CT	**Danbury** Hamilton/Avnet Electronics, 203-797-2800
CT	**Danbury** Schweber Electronics, 203-792-3500
CT	**Wallingford** Arrow Electronics, 203-265-7741
FL	**Altamonte Springs** Schweber Electronics, 305-331-7555
FL	**Deerfield** Arrow Electronics, 305-429-8200
FL	**Ft. Laurderdale** Hamilton/Avnet Electronics, 305-971-2900
FL	**Hollywood** Schweber Electronics, 305-927-0511
FL	**Orlando** Chip Supply, 305-298-7100
FL	**Palm Bay** Arrow Electronics, 305-725-1480
FL	**St. Petersburg** Hamilton/Avnet Electronics, 813-576-3930
FL	**Winter Park** Hamilton/Avnet Electronics, 305-628-3888
GA	**Norcross** Arrow Electronics, 404-449-8252
GA	**Norcross** Hamilton/Avnet Electronics, 404-447-7500
GA	**Norcross** Schweber Electronics, 404-449-9170
IL	**Bensenville** Hamilton/Avnet Electronics, 312-860-7780
IL	**Elk Grove Village** Schweber Electronics, 312-364-3750
IL	**Schaumburg** Arrow Electronics, 312-397-3440
IN	**Carmel** Hamilton/Avnet Electronics, 317-844-9333
IN	**Indianapolis** Arrow Electronics, 317-243-9353
IA	**Cedar Rapids** Arrow Electronics, 319-395-7230
IA	**Cedar Rapids** Schweber Electronics, 319-373-1417
KS	**Overland Park** Hamilton/Avnet Electronics, 913-888-8900
KS	**Overland Park** Schweber Electronics, 913-492-2921
KY	**Lexington** Hamilton/Avnet Electronics
MD	**Columbia** Arrow Electronics, 301-995-0003
MD	**Columbia** Hamilton/Avnet Electronics, 301-995-3500
MD	**Gaithersburg** Schweber Electronics, 301-840-5900
MA	**Bedford** Schweber Electronics, 617-275-5100
MA	**Burlington** Zeus Components, Inc., 617-273-0750
MA	**Norwood** Gerber Electronics, 617-329-2400
MA	**Salem** Sertech Laboratories, 617-745-2450
MA	**Woburn** Arrow Electronics, 617-933-8130
MA	**Woburn** Hamilton/Avnet Electronics, 617-273-7500
MI	**Ann Arbor** Arrow Electronics, 313-971-8220
MI	**Grand Rapids** Arrow Electronics, 616-243-0912
MI	**Grand Rapids** Hamilton/Avnet Electronics, 616-243-8805
MI	**Livonia** Hamilton/Avnet Electronics, 313-522-4700
MI	**Livonia** Schweber Electronics, 313-525-8100
MN	**Edina** Arrow Electronics, 612-830-1800
MN	**Edina** Schweber Electronics, 612-941-5280
MN	**Minnetonka** Hamilton/Avnet Electronics, 612-932-0600
MO	**Earth City** Hamilton/Avnet Electronics, 314-344-1200
MO	**Earth City** Schweber Electronics, 314-739-0526
MO	**St. Louis** Arrow Electronics, 314-567-6888
NH	**Manchester** Arrow Electronics, 603-668-6968
NH	**Manchester** Hamilton/Avnet Electronics, 603-624-9400
NH	**Manchester** Schweber Electronics, 603-625-2250
NJ	**Cherry Hill** Hamilton/Avnet Electronics, 609-424-0100
NJ	**Fairfield** Arrow Electronics, 201-575-5300
NJ	**Fairfield** Hamilton/Avnet Electronics, 201-575-3390
NJ	**Fairfield** Schweber Electronics, 201-227-7880
NJ	**Marlton** Arrow Electronics, 609-596-8000
NM	**Albuquerque** Arrow Electronics, 505-243-4566
NM	**Albuqueruqe** Hamilton/Avnet Electronics, 505-765-1500
NY	**Buffalo** Summit Distributors, Inc., 716-884-3450
NY	**Hauppauge** Arrow Electronics, 516-231-1000
NY	**Hauppauge** Hamilton/Avnet Electronics, 516-231-9800
NY	**Liverpool** Arrow Electronics, 315-652-1000
NY	**Melville** Arrow Electronics, 516-694-6800
NY	**Port Chester** Zeus Components, Inc., 914-937-7400
NY	**Rochester** Arrow Electronics, 716-275-0300
NY	**Rochester** Hamilton/Avnet Electronics, 716-475-9130
NY	**Rochester** Schweber Electronics, 716-421-2222
NY	**Syracuse** Hamilton/Avnet Electronics, 315-437-2642
NY	**Westbury** Schweber Electronics, 516-334-7474
NC	**Raleigh** Arrow Electronics, 919-876-3132
NC	**Raleigh** Schweber Electronics, 919-876-0000
NC	**Raliegh** Hamilton/Avnet Electronics, 919-878-0819
ND	**The Netherland, Eindhoven** Auriema B. V., 40 81 65 65
OH	**Beachwood** Schweber Electronics, 216-464-2970
OH	**Centerville** Arrow Electronics, 513-435-5563
OH	**Dayton** Hamilton/Avnet Electronics, 513-433-0610
OH	**Dayton** Schweber Electronics, 513-439-1800
OH	**Solon** Arrow Electronics, 216-248-3990
OH	**Warrensville Heights** Hamilton/Avnet Electronics, 216-831-3500
OK	**Tulsa** Hall Mark Electronics, 918-665-3200
OK	**Tulsa** Schweber Electronics, 918-622-8000
OR	**Hillsboro** Wyle Distribution, 503-640-6000
OR	**Lake Oswego** Hamilton/Avnet Electronics, 503-635-8157
OR	**Tigard** Arrow Electronics, 503-684-1690
PA	**Horsham** Schweber Electronics, 215-441-0600
PA	**Monroeville** Arrow Electronics, 412-856-7000
TX	**Austin** Arrow Electronics, 512-835-4180
TX	**Austin** Hamilton/Avnet Electronics, 512-837-8911
TX	**Austin** Schweber Electronics, 512-458-8253

Fairchild (Cont)

TX **Austin**
Wyle Distribution Group, 512-834-9957
TX **Carrollton**
Arrow Electronics, 214-380-6464
TX **Dallas**
Schweber Electronics, 214-661-5010
TX **Dallas**
Zeus Components, Inc., 214-783-7010
TX **Houston**
Arrow Electronics, 713-530-4700
TX **Houston**
Hall Mark Electronics, 713-781-6100
TX **Houston**
Hamilton/Avnet Electronics, 713-780-1771
TX **Houston**
Schweber Electronics, 713-784-3600
TX **Houston**
Wyle Distribution Group
TX **Irving**
Hamilton/Avnet Electronics, 214-659-4111
TX **Richardson**
Wyle Distribution Group, 214-235-9953
UT **Salt Lake City**
Arrow Electronics, 801-972-0404
UT **Salt Lake City**
Hamilton/Avnet Electronics, 801-972-2800
UT **Salt Lake City**
Wyle Distribution Group, 801-974-9953
VA **Richmond**
Arrow Electronics, 804-282-0413
WA **Bellevue**
Arrow Electronics, 206-643-4800
WA **Bellevue**
Hamilton/Avnet Electronics, 206-453-5844
WA **Bellevue**
Wyle Distribution Group, 206-453-8300
WI **Brookfield**
Arrow Electronics, 414-792-0150
WI **Brookfield**
Schweber Electronics, 414-784-9020
WI **New Berlin**
Hamilton/Avnet Electronics, 414-784-4510
Can **Calgary, Alberta**
Future Electronics Corporation, 403-259-6437
Can **Dorval, Quebec**
Semad Electronics Ltd., 514-636-4514
Can **Downsview, Ontario**
Future Electronics, Inc., 416-638-4771
Can **Markham, Ontario**
Semad Electronics Ltd., 416-475-8500
Can **Mississauga, Ontario**
Hamilton/Avnet Canada Ltd., 416-677-7432
Can **Nepean, Ontario**
Hamilton/Avnet Canada Ltd., 613-226-1700
Can **Ottawa, Ontario**
Future Electronics, Inc., 613-820-8313
Can **Ottawa, Ontario**
Semad Electronics Ltd., 613-722-6571
Can **Pointe Claire, Quebec**
Future Electronics, Inc., 514-694-7710
Can **St. Laurent, Quebec**
Hamilton/Avnet Canada Ltd., 514-335-1000
Can **Vancouver B.C.**
Future Electronics Corporation, 604-438-5545
Intl **Austria, Wein**
A and D Adrahamczik u Demel, TEL: (0222) 857661/2
Intl **Belgium, Brussels**
Auriema S. A., TEL: (02) 5236295
Intl **Brazil, 13100 Campinas SP**
Fairchild Semiconductor Ltd., TEL: 55-192-416655, 55-192-416434
Intl **Denmark, Bagsvaerd**
E. Friis-Mikkelsen AS, TEL: 02 98 63 33
Intl **England, Horsham, Sussex**
Barlech-Richfield Ltd., TEL: 04 035 1881
Intl **Finland, Helsinki**
ITT MultiKomponent, TEL: 90 739 100
Intl **France, Paris**
Scientech, TEL: 1-609-9136
Intl **Germany, Berlin**
Dr. G. Dorenberg, TEL: 030 219 0070
Intl **Italy, Rome**
Comprel F.p.A, TEL: 06 328 6739
Intl **Netherlands**
Fairchild Semiconductor, TEL: 00-31-40-446909
Intl **Norway, Oslo**
Datamatik AS, TEL: 02-30-1730
Intl **Portugal, Lisbon**
Telectra Sarl, TEL: 68 60 72
Intl **Spain, Madrid**
Venco Electronica S.A., TEL: 01 468 5563
Intl **Sweden, Stockholm**
Nordquist and Berg AB, TEL: 08 18 6000
Intl **Sweden, Stockholm S-11620**
Fairchild Semiconductor AB, TEL: 8-449255
Intl **Switzerland, Grand Saconnex/GE**
Bureau Suisse Romande, TEL: 022 98 2087
Intl **West Germany, Frankfurt**
E 200 Vertribf, TEL: 069 78 40 2829

Faraday Electronics

Faraday Electronics
743 Pastoria Ave.
Sunnyvale, California 94086
408-749-1900
TELEX: 706738

Specific product information:
Nick Antonopoulos

Ferranti

Ferranti Electric, Inc.
87 Modular Avenue
Commack, New York 11725
516-543-0200
TWX: 510-226-1490

Specific product information:
Ken Kushman - IC Product Manager, Std IC's
Anthony V. Walker - VLA Marketing Manager, Semi Custom I.C. Gate Arrays
Joseph M. DeBlasio - VLA Marketing Engineer, Semi Custom I.C. Gate Arrays
Helen A. Nelson - VLA Marketing Assistant, Semi Custom I.C. Gate Arrays
John Day - VLA Systems Engineer, Semi Custom I.C. Gate Arrays
Denzil Broadhurst - VLA Systems Engineer, Semi-Custom I.C. Gate Arrays
John Carter - VLA Ststems Engineer, Semi Custom I.C. Gate Arrays

Application engineering:
Ken Kushman

Literature:
Jeanine Aiello

Price and delivery:
Dina Gentile

Follow-up an order:
Vivian Dennis

All other information:
Ken Kushman

Sales Office & Representatives

Intl **United Kingdom, Chadderton-Oldham**
Ferranti, Ltd., TEL: (061) 624-0515
Intl **West Germany, Munchen**
Ferranti GmbH, TEL: (089) 293-871

Ferranti Interdesign, Inc.

Ferranti Interdesign, Inc.
Ferranti Electronics, Ltd. Subsidiary
1500 Green Hills Road
Scotts Valley, California 95066
408-438-2900
TELEX: 4940840

Sales Office & Representatives

Intl **France, Sevres**
ATAC Diffusion, TEL: 507-11-11
Intl **Israel, Ramat Gan**
Electis Engrg. Co. Ltd., TEL: 011-972-3-724014
Intl **Japan, Shinjuku-ku-Tokyo**
Microtek, Inc., TEL: 03-363-2317
Intl **Sweden, Solna**
Sattco AB, TEL: 8/734 00 40
Intl **United Kingdom, Oldham**
Ferranti Elctrns. Ltd., TEL: 061-624-0515
Intl **West Germany, Munich**
Ferranti GmbH, TEL: (089) 293871

Force Computers

Force Computers, Inc.
727 University Ave.
Los Gatos, CA 95030
408-354-3410

Specific product information:
Wayne Fischer

Fujitsu America

Fujitsu America
910 Sherwood, Suite 23
Lake Bluff, Illinois 60044
312-295-2610

Sales Office & Representatives

AZ **Phoenix**
Sanford Sales Assocs., 602-957-3570
CA **San Diego**
Earle Assocs., 619-278-5441
CA **San Jose**
Applied Elctrn. Mktg., 408-971-9377
CA **Santa Ana**
SC Cubed (SC½¢3), 714-731-9206
CA **Thousand Oaks**
Southern Cal. Semiconductor Sales Co., 805-496-7307
CA **Tustin**
Southern Cal. Semiconductor Sales Co., 714-731-9206
CO **Denver**
Donohue Sales, 303-455-1573
FL **Altamonte Springs**
"C" Assocs., 305-831-1717
FL **Pompano Bch.**
"C" Assocs., 305-972-9200
GA **Lawrenceville**
Tek Rep Mktg., 404-963-1600
IL **Elk Grove Village**
John G. Twist Co., 312-593-0200
IN **Noblesville**
McFadden Sales, Inc., 317-877-5070
ME **E. Sebago**
Electrical Comps. Inc., 207-787-3145
MA **Fall River**
Electrical Comps. Inc., 617-674-0064
MA **Longmeadow**
Electrical Comps. Inc., 413-567-0153

Fujitsu America (Cont)

MA **Natick**
Electrical Comps. Inc., 617-655-2225
MN **Bloomington**
John G. Twist Co., 612-835-2120
NJ **Bellmawr**
TAI Corp., 609-933-2600
NJ **Parlin**
JMR Sales Inc., 201-727-5335
NY **E. Syracuse**
Nycom Inc., 315-437-8343
NY **East Setauket**
JMR Sales Inc., 516-689-8871
NC **Charlotte**
Robert W. Chapman Co., 704-525-2421
NC **Greensboro**
Robert W. Chapman Co., 919-275-0003
NC **Raleigh**
Robert W. Chapman Co., 919-782-2624
OH **Columbus**
McFadden Sales, Inc., 614-459-1280
PA **Greensburg**
Pro-Mark, 412-832-3800
TX **Rowlett**
United Comps. Inc., 214-475-0051
UT **Bountiful**
Anderson Assocs., 801-292-8991
VA **Richmond**
Component Sales, 804-741-4072
WA **Bellevue**
Whisler Sales Co., 206-643-1463
WI **Brookfield**
John G. Twist Co., 414-782-2670
Can **Concord, Ontario**
Votron Elctrns., 416-669-9870

Distributors

CA **San Diego**
Earle Associates, 619-278-5441
MD **Baltimore**
Component Sales, 301-484-3647
NJ **Bellmawr**
TAI, 609-933-2600
PA **Greensberg**
Pro-Mark, 412-832-3800
WA **Bellevue**
Whisler Sales Co., 206-643-1463

Fujitsu Microelectronics

Fujitsu Microelectronics, Inc.
3320 Scott Blvd.
Santa Clara, California 95054-3197
408-727-1700
TWX: 910-338-0190

Specific product information:
Steve Lau
Application engineering:
Steve Lau
Literature:
Tim Henard
Price and delivery:
Respective sales office
Follow-up an order:
Respective sales office
All other information:
Steve Lau (LD) 408-727-1700

Sales Office & Representatives

AZ **Scottsdale**
Thom Luke Sales, 602-941-1901
CA **Campbell**
Fujitsu Microelectronics, 408-866-5600
CA **San Diego**
Harvey King Inc., 619-587-9300
CA **Santa Clara**
NorCom Inc., 408-727-7707
CO **Boulder**
Front Range Mktg, 303-433-4780
GA **Norcross**
Dixie Tech. Mktg., 404-447-6832
ID **Boise**
Cascade Components, 208-343-9886
IL **Arlington Heights**
ZMS Electronic Sales, 312-394-4422
IL **Schaumburg**
Fujitsu Microelectronics, 312-885-1500
IN **Indianapolis**
Gaertner Assoc., 317-842-0373
IA **Cedar Rapids**
Electomec Sales, Inc., 319-362-6413
KS **Overland Park**
Kebco Inc., 913-541-8431
KS **Wichita**
Kebco Inc., 316-733-1301
MD **Baltimore**
Comp. Sales, Inc., 301-484-3647
MA **Burlington**
Mill-Bern Assocs., 617-229-1313
MA **Newton Centre**
Fujitsu Microelectronics, 617-964-7080
MI **Brighton**
AP Assoc., 313-229-6550
MN **Burnsville**
Electromec Sales Inc., 612-894-8200
MN **Eagan**
Fujitsu Microelectronics, 612-454-0323
MO **Maryland Heights**
Kebco Inc., 314-576-4111
NY **Buffalo**
Quality Components, 716-837-5430
NY **Hauppauge**
Technical Applications Mktg., 516-348-0800
OH **Kettering**
Bear Mktg, 513-299-5877
OH **Richfield**
Bear Mktg., 216-659-3131
OR **Beaverton**
L-Squared, 503-644-8555
PA **Erdenheim**
Omni Sales, 215-233-4600
TX **Austin**
Fujitsu Microelectronics, 512-343-0320
TX **Houston**
Fujitsu Microelectronics, 713-784-7111
UT **Salt Lake City**
Front Range Mktg, 801-364-6481
WA **Seattle**
L. Squared Limited
WI **Brookfield**
ZMS Electronic Sales, 414-782-2222
Can **Burnaby, B.C.**
Great Northern Tech Inc., 604-430-6677
Can **Islington, Ontario**
Pipe-Thompson Ltd., 416-236-2355
PR **Santurce**
Mill & Bern Assoc., 809-722-6942

Distributors

AZ **Phoenix**
Cetec Elctrns., 602-272-7951
AZ **Tempe**
Marshall Inds., 602-968-6181
CA **Canoga Park**
Marshall Inds., 213-999-5001
CA **Cupertino**
Western Microtechnology, 408-725-1660
CA **Irvine**
Marshall Inds., 714-660-0951
CA **Milpitas**
Marshall Inds., 408-943-4600
CA **Newport Beach**
Fujitsu Microelectronics, 714-720-9688
CA **San Diego**
Cetec Elctrns., 619-278-5020
CA **San Diego**
Marshall Inds., 619-578-9600
CA **Santa Clara**
Cetec Elctrns., 408-980-0110
CA **Southgate**
Cetec Elctrns., 213-773-6521
CA **Sunnyvale**
Time Elctrns. West, 408-734-9888
CA **Tustin**
Image Electronics, 714-730-0303
CO **Denver**
Integrated Electronics Corp., 303-292-5537
CO **Denver**
Marshall Inds., 303-427-1818
CT **Orange**
Milgray Connecticut, 203-795-0711
CT **Wallingford**
Marshall Inds., 203-265-3822
FL **Fort Lauderdale**
Time Elctrns.-Fl., 305-974-4800
FL **Orlando**
Marshall Inds., 305-841-1878
FL **Winter Park**
Milgray Florida, 305-647-5747
GA **Atlanta**
Milgray Atlanta, 404-393-9666
GA **Norcross**
Marshall Inds., 404-923-5750
IL **Hoffman Estates**
Intercomp Inc., 312-843-2040
IL **Northbrook**
Classic Comp. Supply, 312-272-9650
IL **Wood Dale, Chicago**
Time Electronics, 312-350-0610
KS **Overland Park**
Milgray Kansas, 913-236-8800
MD **Columbia**
Milgray Washington, 301-995-6169
MD **Gaithersburg**
Marshall Inds., 301-840-9450
MA **Burlington**
Marshall Inds., 617-272-8200
MA **Burlington**
Milgray Elctrns.-New England, 617-272-6800
MA **Peabody**
Time Elctrns.-New England, 617-532-6200
MA **Wilmington**
RC Components, 617-273-1860
MI **Grand Rapids**
Calder Assoc., 616-698-7400
MI **Livonia**
Marshall Industries, 313-525-5850
MI **Livonia**
Reptron Electronics, 313-525-2700
MN **Plymouth**
Marshall Inds., 612-559-2211
MO **St. Louis**
Time Elctrns., 314-391-6444
NJ **Fairfield**
Marshall Inds., 201-882-0320
NJ **Marlton**
Milgray DelValley, 609-983-5010
NJ **Mt. Laurel**
Marshall Inds., 609-234-9100
NY **Hauppauge**
Current Comps., 516-273-2600
NY **Hauppauge**
Fujitsu Microelectronics, 516-361-6565
NY **Hauppauge**
Marshall Inds., 516-273-2424
NY **Hauppauge**
Mast Distrs., 516-273-4422
NY **Johnson City**
Marshall Inds., 607-798-1611
NY **Rochester**
Marshall Inds., 716-235-7620
NY **Rome**
Rome Electronics, 315-337-5400
OH **Dayton**
Marshall Inds., 513-236-8088
OH **Worthington**
Reptron Electronics, 614-436-6675

Fujitsu Microelectronics (Cont)

OK	**Tulsa** Radio, Inc., 918-587-9123
PA	**King of Prussia** Time Elctrns. Mid-Atlantic, 215-337-0900
TX	**Dallas** Marshall Inds., 214-233-5200
TX	**Houston** Marshall Inds., 713-789-6600
TX	**Richardson** Fujitsu Microelectronics, 214-669-1616
WA	**Bellevue** Integrated Electronic Corp., 206-455-2727
WA	**Bellvue** Marshall Inds., 206-747-9100
WI	**Milwaukee** Marsh Elctrns., 414-475-6000
WI	**New Berlin** Classic Comps., 414-786-5300
Can	**Pointe Claire, Quebec** Future Elctrns. Corp., 514-694-7710
Can	**Scarborough, Ontario** Carsten Electronics Ltd., 416-495-7705

Futurenet

Futurenet (Data I/O)
9310 Topanga Canyon Blvd.
Chatsworth, California 91311-5728
818-700-0691

Galil Motion Control

Galil Motion Control
1928-A Old Middlefield Way
Mountain View, California 94043
415-964-6494
TELEX: 171409

Gateway Design

Gateway Design Automation Corp.
235 Great Road
Littleton, Massachusetts 01460
617-486-9701

GE Calma

GE Calma
501 Sycamore Dr.
Milpitas, California 95035
408-434-4182
TELEX: FAX: 408-434-4066

GE Semiconductor

GE Semiconductor
P. O. Box 13049
Research Triangle Park, North Carolina 27709
919-549-3167

General Instrument

General Instrument Corporation
Microelectronics Division
600 W. John Street
Hicksville, New York 11802
516-933-3379
TWX: 510-221-1866

Sales Office & Representatives

Intl	**Germany, Munchen** General Instrument Deutschland GmbH, TEL: (089) 95997-0
Intl	**Hong Kong, Hong Kong** General Instrument Hong Kong Ltd., TEL: (5) 434360
Intl	**Japan, Tokyo** General Instrument Intl. Corp., TEL: (03) 437-0281
Intl	**Taiwan, Taipei** General Instrument Microelectronics Taiwan, TEL: 886-2-914-6234

General Micro Systems

General Micro Systems Inc.
4740 Brooks Street
Montclair, California 91763
714-621-7532

Genrad

Genrad
170 Tracer Lane
Waltham, Massachusetts 02254
617-890-4900

Gerber Scientific Instrument

Gerber Scientific Instrument
83 Gerber Road West
S. Windsor, Connecticut 06074
203-644-1551

GigaBit Logic

GigaBit Logic
1908 Oak Terrace Lane
Newbury Park, California 91320
805-499-0610
TELEX: 6711358

Sales Office & Representatives

CT	**New England** Technical Sales, 203-237-8827
FL	**Ft. Lauderdale** Dyne-A-Mark, 305-771-6501
FL	**Maitland** Dyne-A-Mark, 305-629-5557
FL	**Palm Bay** Dyne-A-Mark, 305-727-0192
MD	**Columbia** Delta III Associates, 301-730-4700
MA	**Framingham** GigaBit Logic, 617-626-0241
MA	**Wayland** Wayland Engineering Sales, 617-655-6080
MN	**Minneapolis** Comprehensive Tech. Sales, 612-888-7011
NY	**Jamaica** S-J Associates, 718-291-3232
NY	**Syracuse** NYCOM Inc., 315-437-8343
NC	**Raleigh** REP Inc., 919-851-3007
OR	**Tigard** Westberg & Assoc., 503-620-1931
PA	**Feasterville** Knowles Associates, 215-322-7100
WA	**Bellevue** Westberg & Assoc., 206-453-8881

Can	**Brampton** Cantec Rep. Inc., 416-791-5922
Can	**Ottawa** Cantec Rep. Inc., 613-725-3704
Can	**Quebec** Cantec Rep. Inc., 514-683-6131

Gold Star

Gold Star Semiconductor
1130 E. Arques Ave.
Sunnyvale, California 94086
408-736-4787
TELEX: 176835

MP Systems
THE "APPROVED" SOURCE
MP SYSTEMS THE "APPROVED" SOURCE
The First Distributor to Call For:
GS
GoldStar Semiconductor, Ltd.
WORLDWIDE SUPPLIER
PERFORMANCE GUARANTEED
ON TIME • FIRM QUOTES
• TTL AND MEMORY SPECIALISTS
• EXTRA SERVICE
CALIFORNIA
TEL: (714) 770-6411
TELEX: 681485 FAX: (714) 770-8775
1-800-624-1688
DALLAS
TEL: (214) 385-8885
FAX: (214) 385-8921

Golden Electronics

Golden Electronics Inc.
2133 Yorktown
Ann Arbor, Michigan 48105
313-663-9724

Gould AMI Semiconductors

Gould AMI Semiconductors
3800 Homestead Road
Santa Clara, California 95051
408-246-0330
TELEX: 910-338-0018 or 910-338-0024

Sales Office & Representatives

AL	**Huntsville** Sales Office, 205-830-1435

Gould AMI Semiconductors (Cont)

AZ **Scottsdale**
Sales Office, 602-996-5638

CA **Carlsbad**
Sales Office, 619-434-6031

CA **La Canada**
Sales Office, 818-952-1126

CO **Englewood**
Sales Office, 303-694-0629

FL **Altamontte Springs**
Sales Office, 305-830-8889

FL **Pompano Beach**
Sales Office, 305-979-8775

IL **Elk Grove Village**
Sales Office, 312-437-6496

MD **Columbia**
Sales Office, 301-964-2322

MA **Lexington**
Sales Office, 617-861-6530

MI **Livonia**
Sales Office, 313-478-4220

MN **Edina**
Sales Office, 612-893-1214

NY **Jericho**
Sales Office, 516-937-1750

NY **Monsey**
Sales Office, 914-352-5333

NC **Raleigh**
Sales Office, 919-847-9468

OH **Worthington**
Sales Office, 614-436-0330

PA **Ambler**
Sales Office, 215-643-0217

TX **Austin**
Sales Office, 512-467-6977

TX **Richardson**
Sales Office, 214-231-5721

WA **Bellevue**
SDR2 Sales Office, 206-462-8870, 206-624-2621

Can **Ontario**
Future Electronics, 416-663-5563

Can **Ontario**
Sales Office, 613-727-1577

Intl **Italy, Milano**
AMI Microsystems S.R.L., TEL: (02) 3761275, (02) 3763022

Intl **Japan, Tokyo**
Asahi Microsystems Inc., TEL: (8) 3-507-2371

Intl **South Africa, Transvaal**
Promilect, TEL: (01) 485712

PR **San Juan**
Electronic Tech. Sales, Inc., 809-790-8259

Distributors

AL **Huntsville**
Kierulff Elctrns., 205-883-6070

AL **Huntsville**
Schweber Elctrns, 205-882-2200

AZ **Phoenix**
Schweber Elctrns, 602-997-4874

AZ **Scottsdale**
Western Microtechnology, 602-948-4240

AZ **Tempe**
Anthem Electrns, 602-244-0900

CA **Cupertino**
Western Micro Technology, 408-725-1660

CA **Irvine**
Schweber Elctrns., 714-863-0220

CA **Los Angeles**
Kierullf Elctrns., 213-725-0325

CA **Sacramento**
Schweber Elctrns, 916-929-9732

CA **San Diego**
Anthem Elctrns., 619-453-4871

CA **San Diego**
Kierulff, 619-278-2112

CA **San Jose**
Kierulff Elctrns, 415-971-2600

CA **Santa Clara**
Schweber Elctrns., 408-748-4700

CA **Tustin**
Kierulff Elctrns., 714-731-5711

CO **Englewood**
Anthem Elctrns., 303-790-4500

CO **Englewood**
Kierulff Elctrns., 303-790-4444

FL **Altemonte Springs**
Schweber Elctrns., 305-331-7555

FL **Ft. Lauderdale**
Kierulff Elctrns., 305-486-4004

GA **Norcross**
Kierulff Elctrns., 404-447-5252

IL **Itasca**
Kierulff Elctrns., 312-250-0500

IA **Cedar Rapids**
Schweber Elctrns., 319-373-1417

KS **Overland Park**
Schweber Elctrns., 913-492-2922

MD **Baltimore**
Kierulff Elctrns., 301-636-5800

NH **Manchester**
Schweber Elctrns., 603-625-2250

NC **Raleigh**
Kierulff Elctrns., 919-872-8410

NC **Raleigh**
Schweber Elctrns., 919-867-0000

OH **Dayton**
Schweber Elctrns., 513-439-1800

OK **Tulsa**
Schweber Elctrns., 918-622-8000

OR **Beaverton**
Western Microtechnology, 503-629-2082

PA **Pittsburgh**
Schweber Elctrns., 412-782-1600

TX **Austin**
Schweber Elctrns., 512-458-8253

TX **Dallas**
Kierulff Electrns., 214-343-2400

TX **Dallas**
Schweber Elctrns., 214-661-5010

TX **Houston**
Kierulff Electrns., 713-530-7030

TX **Houston**
Schweber Elctrns., 713-784-3600

WA **Redmond**
Anthem Elctrns., 206-643-4800

WA **Redmond**
Western MicroTechnology, 206-881-6737

WA **Tukwila**
Distl., 206-575-4420

WI **Brookfield**
Schweber Elctrns., 414-784-9020

Can **Calgary, Alberta**
Future Elctrns., 403-235-5325

Intl **South Africa, Transvaal**
Promilect, TEL: (011) 485712

GTE Microcircuits

GTE Microcircuits Division
GTE Communication Systems Corporation
2000 W. 14th St.
Tempe, Arizona 85281
602-968-4431
TWX: 910-951-1383

Sales Office & Representatives

CA **Manhattan Beach**
Sales Office, 213-546-4731

NY **Hauppauge**
Sales Office, 516-724-8300

Intl **West Germany, Munich**
GTE Microcircuits Div., TEL: 089/1 78 20 31

Harris Semiconductor

Harris Semiconductor
Analog & Digital Bipolar/Digital CMOS Products Divisions/
Department ICM
P.O. Box 883
Melbourne, Florida 32905-0883
305-724-7000
800-4-HARRIS
(In CAN. 800-344-2444)ext. 1000
TWX: 510-959-6259

Specific product information:
Field Sales Office
Application engineering:
Field Sales Office
Literature:
Field Sales Office
Price and delivery:
Field Sales Office
Place an order:
Field Sales Office
Follow-up an order:
Customer Service .... (305) 724-7418
All other information:
Marketing Communications .... (305) 724-7418

Sales Office & Representatives

AL **Huntsville**
Harris Semiconductor, 205-837-8886

AZ **Phoenix**
Compass Mktg. & Sales, Inc., 602-266-5400

AZ **Scottsdale**
Harris Semiconductor, 602-870-0080

AZ **Tuscon**
Compass Mktg., 602-293-1220

CA **Costa Mesa**
Harris Semiconductor, 714-540-2176

CA **Mountain View**
Brooks Tech. Grp., 415-960-3880

CA **Mountain View**
Harris Semiconductor, 415-964-6443

CA **San Diego**
Hadden Assocs., 619-565-9444

CA **Woodland Hills**
Harris Semiconductor, 818-992-0686

CO **Denver**
Comp. Sales, Inc., 303-779-8060

CT **Ridgefield**
Phoenix Sales Co., 203-438-9644

FL **Clearwater**
Delmac Sales, 813-447-5192

FL **Ft. Lauderdale**
Harris Semiconductor, 305-739-0016

FL **Melbourne**
Harris Semiconductor, 305-724-3576

FL **Orlando**
Delmac Sales, 305-898-4688

FL **Palm Bay**
Delmac Sales, 305-724-8377

FL **Tamarac**
Delmac Sales, 305-726-1330

GA **Atlanta**
Harris Semiconductor, 404-256-4000

IL **Elk Grove Village**
Oasis Sales, Inc., 312-640-1850

IL **Rosemont**
Harris Semiconductor, 312-692-4960

IN **Carmel**
Harris Semiconductor, 317-844-8011

IN **Ft. Wayne**
Corraro Marsh, 219-637-5548

IA **Cedar Rapids**
Cahill Assocs., Inc., 319-377-8219

KS **Overland Park**
Advanced Technical Sales, 913-642-6675

MD **Columbia**
L.D. Lowery, 301-964-0225

MA **Burlington**
Harris Semiconductor, 617-273-5942

Harris Semiconductor (Cont)

MA **Burlington**
Mill Bern Assocs., Inc., 617-273-1313
MI **Novi**
Action Comp. Sales, 313-349-3940
MN **Minneapolis**
Harris Semiconductor, 612-854-3558
MN **St. Paul**
Cahill, Schmitz & Cahill, Inc., 612-646-7217
MO **St. Louis**
Advanced Technical Sales, 314-227-4448
NM **Albuquerque**
Compass Mktg. & Sales Inc., 505-888-0800
NY **Binghamton**
Gen. Tech Electronics, 607-648-8833
NY **Great Neck**
Trionic Assoc. Inc., 516-466-2300
NY **Liverpool**
Gen. Tech Electronics, 315-451-3480
NY **Melville**
Harris Semiconductor, 516-249-4500
NY **Pittsford**
Gen. Tech Electronics, 716-381-2820
NY **Pleasant Valley**
Gen. Tech Electronics, 914-635-3233
NC **Raleigh**
Harris Semi Conductor, 919-847-8985
OH **Chagrin Falls**
Midwest Mktg. Assocs., 216-247-6655
OH **Dayton**
Midwest Mktg. Assocs., 513-433-2511
OH **Dublin**
Harris Semi Conductor, 614-766-4111
PA **Broomall**
L. D. Lowery, Inc., 215-356-5300
PA **Wayne**
Harris Semiconductor, 215-687-6680
TX **Austin**
Nova, 512-343-2321
TX **Dallas**
Harris Semiconductor, 214-248-3237
TX **Dallas**
Nova Mktg., 214-750-6082
TX **Houston**
Nova Mktg., 713-988-6082
UT **Salt Lake City**
Comp. Sales, Inc., 801-268-8440
VA **Charlottesville**
L. D. Lowery, Inc., 804-973-6672
WA **Federal Way**
Harris Semiconductor, 206-838-4878
WA **Vancouver**
Harris Semiconductor, 206-696-0043, 503-283-7027
WI **Brookfield**
Oasis Sales, Inc., 414-782-6660
Can **Brampton, Ontario**
Clar K-Hurman Assoc., 416-453-1118
Can **Nepean, Ontario**
Clark-Hurman Assoc., 613-727-5626
Can **West Vancouver, British Columbia**
Blakewood Elect. Systems, Inc., 604-926-8000
Can **Winnipeg, Manitoba**
Blakewood Elctrns., 204-667-2470, 204-885-7118

Distributors

AL **Huntsville**
Hall-Mark/Huntsville, 205-837-8700
AL **Huntsville**
Hamilton/Avnet, 205-837-7210
AL **Huntsville**
Schweber Elctrns., 205-882-2200
AZ **Phoenix**
Hall-Mark Elctrns., 602-437-1200
AZ **Scottsdale**
Western Microtechnology Sales, 602-948-4240
AZ **Tempe**
Anthem Electronics, 602-966-6600
AZ **Tempe**
Hamilton/Avnet, 602-231-5100
CA **Chatsworth**
Anthem Electronics, 818-700-1000
CA **Chatsworth**
Avnet Electronics, 818-700-2600, 818-700-6552
CA **Costa Mesa**
Avnet Elctrns., 714-754-6040
CA **Costa Mesa**
Hamilton Electro, 714-641-4152
CA **Culver City**
Hamilton/Avnet, 213-558-2925
CA **Cupertino**
Western Microtechnology Sales, 408-725-1660
CA **Irvine**
Schweber Elctrns., 714-863-0200
CA **Los Angeles**
Enterprex International Corp., 213-267-1145
CA **Mtn. View**
Fegu Incorporated, 415-961-2380
CA **Ontario**
Hamilton/Avnet, 714-989-8810
CA **Sacramento**
Hamilton/Avnet, 916-920-3150
CA **San Diego**
Anthem Electronics, 619-453-4871
CA **San Diego**
Hall-Mark Elctrns., 619-268-1201
CA **San Diego**
Hamilton/Avnet, 619-571-7542
CA **San Jose**
Anthem Electronics, 408-946-8000
CA **Santa Clara**
Schweber Elctrns., 408-748-4700
CA **Sunnyvale**
Anthem Electronics, 408-773-9990
CA **Sunnyvale**
Hall-Mark Electronics, 408-773-9990
CA **Sunnyvale**
Hamilton/Avnet, 408-743-3379
CA **Tustin**
Anthem Electronics, 714-730-8000
CO **Englewood**
Anthem Electronics, 303-790-4500
CO **Englewood**
Hall-Mark/Denver, 303-694-1662
CO **Englewood**
Hamilton/Avnet, 303-740-1017
CT **Danbury**
Hamilton/Avnet, 203-797-1100
CT **Danbury**
Schweber Elctrns., 203-748-7080
CT **Milford**
Falcon Electronics, 203-878-5272
FL **Altamonte Springs**
Schweber Elctrns., 305-331-7555
FL **Ft. Lauderdale**
Hall-Mark, 305-971-9280
FL **Ft. Lauderdale**
Hamilton/Avnet, 305-971-2900
FL **Hollywood**
Schweber Elctrns., 305-921-0301
FL **Orlando**
Hall-Mark, 305-855-4020
FL **St. Petersburg**
Hall-Mark, 813-576-8691
FL **St. Petersburg**
Hamilton/Avnet, 813-576-3930
GA **Norcross**
Hall-Mark, 404-447-8000
GA **Norcross**
Hamilton/Avnet, 404-447-7503
GA **Norcross**
Schweber Elctrns., 404-446-5842
IL **Bensenville**
Hall-Mark, 312-860-3800
IL **Bensenville**
Hamilton/Avnet, 312-860-7780
IL **Elk Grove Village**
Schweber Elctrns., 312-364-3750
IN **Carmel**
Hamilton/Avnet, 317-844-9333
KS **Lenexa**
Hall-Mark, 913-888-4747
KS **Overland Park**
Hamilton/Avnet, 913-541-7921
MD **Baltimore**
Hall-Mark, 301-796-9300
MD **Columbia**
Hamilton/Avnet, 301-995-3529
MD **Gaithersburg**
Schweber Elctrns., 301-840-5900
MD **Timonium**
Zebra Electronics, 301-252-6576
MA **Bedford**
Schweber Elctrns., 617-275-5100
MA **Wilmington**
R C Components, 617-273-1860
MA **Woburn**
Hamilton/Avnet, 617-935-9700
MI **Grand Rapids**
Hamilton/Avnet, 616-243-8805
MI **Livonia**
Hamilton/Avnet, 313-522-4700
MI **Livonia**
Schweber Elctrns., 313-525-8100
MN **Bloomington**
Hall-Mark, 612-854-3223
MN **Eden Prairie**
Schweber Elctrns., 612-941-5280
MN **Minnetonka**
Hamilton/Avnet, 612-932-0600
MO **Earth City**
Hamilton/Avnet, 314-344-1200
MO **Maryland Heights**
Hall-Mark, 314-291-5350
NJ **Cherry Hill**
Hall-Mark, 609-424-7300
NJ **Cherry Hill**
Hamilton/Avnet, 609-424-0110
NJ **Fairfield**
Hall-Mark, 201-575-4415
NJ **Fairfield**
Hamilton/Avnet, 201-575-3390
NJ **Fairfield**
Schweber Elctrns., 201-227-7880
NJ **Maple Shade**
Zebra Electronics, 800-222-0349
NJ **Pompton Plains**
Zebra Electronics, 201-839-9040
NM **Albuquerque**
Hamilton/Avnet, 505-765-1500
NY **Bohemia**
Zebra Electronics, 516-563-2160
NY **East Syracuse**
Hamilton/Avnet, 315-437-2641
NY **Melville**
Hamilton/Avnet, 516-454-6000
NY **Rochester**
Hamilton/Avnet, 716-475-9130
NY **Rochester**
Schweber Elctrns., 716-424-2222
NY **Westbury**
Schweber Elctrns., 516-334-6834
NC **Raleigh**
Hall-Mark, 919-872-0712
NC **Raleigh**
Hamilton/Avnet, 919-878-0819
NC **Raleigh**
Schweber Electronics, 919-876-0000
OH **Beachwood**
Schweber Elctrns., 216-464-2970
OH **Cleveland**
Hamilton/Avnet, 216-831-3500
OH **Dayton**
Hamilton/Avnet, 513-439-6700
OH **Highland Heights**
Hall-Mark, 216-473-2907
OH **Westerville**
Hall-Mark, 614-891-4555

Harris Semiconductor (Cont)

OK	**Tulsa** Hall-Mark, 918-665-3200
OR	**Lake Oswego** Hamilton/Avnet, 503-635-8831
PA	**Horsham** Schweber Elctrns., 215-641-3676
PA	**Pittsburgh** Schweber Elctrns., 412-782-1600
TX	**Austin** Hall-Mark, 512-258-8848
TX	**Austin** Hamilton/Avnet, 512-837-8911
TX	**Austin** Schweber Elctrns., 512-458-8253
TX	**Dallas** Hall-Mark, 214-553-4300
TX	**Dallas** Hall-Mark/Corporate, 214-343-5953
TX	**Dallas** Schweber Elctrns., 214-661-5010
TX	**Houston** Hall-Mark, 713-781-6100
TX	**Houston** Hamilton/Avnet, 713-780-1771
TX	**Houston** Schweber Elctrns., 713-784-3600
TX	**Irving** Hamilton/Avnet, 214-659-4100
UT	**Salt Lake City** Hamilton/Avnet, 801-972-4300
WA	**Bellevue** Hamilton/Avnet, 206-643-3950
WA	**Redmond** Anthem Electronics, 206-881-0850
WI	**Brookfield** Schweber Elctrns., 414-784-9020
WI	**New Berlin** Hamilton/Avnet, 414-784-4518
WI	**Oak Creek** Hall-Mark/Milwaukee, 414-761-3000
Can	**Calgary, Alberta** Hamilton/Avnet, 403-230-3586
Can	**Mississauga, Ontario** Hamilton/Avnet, 416-673-3803
Can	**Neatan, Ontario** Hamilton/Avnet, 613-226-1700
Can	**Ottawa, Ontario** Hamilton/Avnet, 613-226-1700
Can	**St. Laurent, Quebec** Hamilton/Avnet, 514-335-1000
Intl	**Argentina, Buenos Aires** Elko S.R.L., TEL: 9-011-54-1-40-8971
Intl	**Australia, Crows Nest** VSI Elctrns., TEL: 61-439-4655
Intl	**Austria, Wien** Transistor, TEL: 0222/829401
Intl	**Belgium, Brussels** M.C.A.-Tronix, TEL: 0103241 362780
Intl	**Denmark, Glostrup** Ditz Schweitzer A.S., TEL: 45-2-453044
Intl	**Finland, Helsinki** Yleiselektroniikka oy, TEL: 9-358-05-621122
Intl	**France, Nantes** Matra-Harris Semiconductor, TEL: 33-40-303030
Intl	**France, Saint Quentin-En-Yuelines** Matra-Harris Semiconductor, TEL: 3-043-82-72
Intl	**Germany, Camberg Wurges** Jermyn GmbH, TEL: 49-6434-231
Intl	**Germany, Eching Bei Muncken** Kontron Hochfrequenz GmbH, TEL: 81-65-771
Intl	**Germany, Frankfurt** Spoerle Elctrn. KG, TEL: 06103/3040
Intl	**Germany, Munich** Harris Semiconductor, TEL: 49-89-319-1035
Intl	**Germany, Patzbrunn** Sasco GmbH, TEL: 49-89-46-111
Intl	**Germany, Quickborn** Alfred Neye-Enatechnik GmbH, TEL: 49-4106-6121
Intl	**India, Bombay** Zenith Electronics, TEL: 244364/224887
Intl	**Israel, Ramat Gan** MRBD Inds. Ltd., TEL: 03-7364791
Intl	**Italy, Cinisello Balsamo** Lasi Elettronica, TEL: 6120441
Intl	**Italy, Cinisello Balsamo (Milano)** Harris Semiconductor, TEL: 39-6187249
Intl	**Italy, Milano** Krontron SPA, TEL: 2-50721 A/C 2
Intl	**Japan, Tokyo** Harris Semiconductor Inc., TEL: 81-3-345-8911
Intl	**Netherlands, Badhoevedorp** Techmation Elctrns. B.V., TEL: (0968) 6451
Intl	**Norway, Oslo** National Elektro, TEL: 2-644-970
Intl	**South Africa, Dunswart** Allied Elctrn. Comps., TEL: 27-11-8921001
Intl	**Sweden, Solna** A B Betoma, TEL: 46-8-820280
Intl	**Switzerland, Baden-Daettwil** W. Stolz A.G., TEL: 41-56-840151
Intl	**United Kingdom, Ashford, Middlesex** Hy-Comp Ltd. (Chips Only), TEL: 44-7-842-46273
Intl	**United Kingdom, Bedford** Radio Resistor Co., Ltd., TEL: 0234-47211
Intl	**United Kingdom, County Meath** Trim Electronics Ltd., TEL: 353-46-36263
Intl	**United Kingdom, Darmouth** Eltek/Elmo Semi. Ltd., TEL: 4-804304455
Intl	**United Kingdom, Hartlepool** SDP (Chips Only), TEL: 44 429 33721
Intl	**United Kingdom, Kirkmuirhill, Lanksh.** Stewart Elctrns. Ltd. (Rep. Only), TEL: 44-55589-2393
Intl	**United Kingdom, Slough, Berks** Macro Mktg. Ltd., TEL: 44-6286-4422
Intl	**United Kingdom, Thame, Oxon** Thames Comps., TEL: 44-84421-4561
Intl	**United Kingdom, Winnersh, Berks** Harris Semiconductor, TEL: 44-734-698787

Harris Semiconductor

Harris Semiconductor
Custom Integrated Circuits Division/Department ICM
P. O. Box 883
Melbourne, Florida 32901
305-724-7000
TWX: 510-959-6259

Specific product information:
Field Sales Office West Coast 714-957-6557, East Coast 305-724-3576
Data Sheet Products .... Contact Standard Product Field Rep. in your area or 305-724-7521

Application engineering:
Technical Information Services 305-724-7418

Literature:
Field Sales Office 305-724-7418

Price and delivery:
Field Sales Office

Place an order:
Field Sales Office

All other information:
Marketing Communications 305-729-5727

Sales Office & Representatives

MI	**Farmington Hills** Tri-Tech Sales
NH	**Nashua** Access Systems, 603-888-8160

Distributors

IN	**Indianapolis** Hall/Mark, 317-872-8875
Intl	**Spain, Madrid** Selco, TEL: 34-1-4094634

Harris Microwave Semiconductor

Harris Microwave Semiconductor
1530 McCarthy Blvd.
Milpitas, California 95035
408-262-2222
TWX: 910-338-2247

Specific product information:
Field Sales Office

Application engineering:
Field Sales Office

Literature:
Field Sales Office

Price and delivery:
Field Sales Office

Place an order:
Field Sales Office

Follow-up an order:
Customer Service 408-262-2222

All other information:
Marketing 408-262-2222

Sales Office & Representatives

AZ	**Scottsdale** Faser Technical Sales, 602-948-4404
CA	**Costa Mesa** Harris Semiconductor, 714-540-2176
CA	**Milpitas** Harris Microwave Semiconductor, 408-262-2222
CA	**Mtn. View** Brooks Technical Group, 415-960-3880
CA	**San Diego** Hadden Associates, Inc., 619-565-9444
CA	**Woodland Hills** Harris Semiconductor, 213-992-0686
CO	**Englewood** Component Sales, Inc., 303-779-8060
CT	**Ridgefield** Phoenix Sales, 203-438-9644
FL	**Clearwater** Delmac Sales, Inc., 813-447-5192
FL	**Orlando** Delmac Sales, Inc., 305-898-4688
FL	**Palm Bay** Delmac Sales, Inc., 305-724-8377
FL	**Tamarac** Delmac Sales, Inc., 305-726-1330
GA	**Atlanta** Harris Semiconductor, 404-256-4000
GA	**Warner-Robins** The Resolve Company, 912-923-6424
IL	**Elk Grove Village** Oasis Sales, 312-640-1850
IN	**Carmel** Carrao Marsh, Inc., 317-843-0739
IN	**Ft. Wayne** Carrao Marsh, Inc., 219-637-5548
IN	**Greenfield** Carrao Marsh, Inc., 317-894-0377
IN	**Indianapolis** Carrao Marsh, Inc., 317-872-7157
IA	**Cedar Rapids** Cahill, Schmitz & Howe, 319-377-8219
KS	**Overland Park** Advanced Technical Sales, 913-642-6675
MD	**Davidsonville** RL Engineering, Inc., 301-760-5533

Harris Microwave Semiconductor (Cont)

MA **Needham Heights**
O'Sullivan & Murphy, 617-449-4141
MN **St. Paul**
Cahill, Schmitz & Cahill, Inc., 612-646-7217
MO **Ballwin**
Advanced Technical Sales, 314-227-4448
NH **Nashua**
Access Systems, 603-888-8160
NJ **West Orange**
E-F Technical Sales, Inc., 201-731-7203
NY **Clark Mills**
KLM Garner, inc., 315-853-6126
NY **Huntington**
E-F Technical Sales, Inc., 516-549-1818
NY **North Syracuse**
KLM Garner, 315-458-6214
NY **Pittsford**
KLM Garner, 716-381-8350
OH **Chagrin Falls**
Midwest Marketing Associates, 216-247-6655
OH **Dayton**
Midwest Marketing Associates, 513-433-2511
OK **Tulsa**
Nova Marketing, Inc., 918-743-6202
PA **Huntingdon Valley**
Rabal Associates, Inc., 215-947-4825
TX **Austin**
Nova Marketing, Inc., 512-343-2321
TX **Dallas**
Nova Marketing, Inc., 214-750-6082
TX **Houston**
Nova Marketing, Inc., 713-988-6082
UT **Salt Lake City**
Component Sales, Inc., 801-268-8440
WA **Federal Way**
Harris Semiconductor, 206-838-4878
WA **Vancouver**
Harris Semiconductor, 206-696-0043, 503-297-7621
WI **Brookfield**
Oasis Sales, 414-782-6660
Can **Brampton, Ontario**
Clark-Hurman Associates, 416-453-1118
Can **Nepean, Ontario**
Clark-Hurman Associates, 613-269-3565
Can **W. Vancouver, B.C.**
Blakewood Electronic Systems Inc., 604-926-8000
Can **Winnipeg, Manitoba**
Blakewood Electronic Systems Inc., 204-667-2470
Intl **England, Workingham, Berks**
Harris Systems Ltd., TEL: (0734) 698-787
Intl **France, Nantes Cedex**
Matra Harris Semiconducteurs, TEL: (40) 30-30-30
Intl **India, Worli Naka, Bombay**
Hindco Corporation, TEL: 493-1544
Intl **Israel, Ramat Gan**
M.R.B.D., Ltd., TEL: 00972-3-738701
Intl **Italy, Cinisello, Balsmo**
Harris/MHS Semiconductor Sales, TEL: (39-2) 618 82 821
Intl **Japan, Shibuaya-Ku, Tokyo**
Harris K. K., TEL: 81-3-485-1031
Intl **West Germany, Eching**
Harris-MHS GmbH, TEL: 89-31-91-035
Intl **West Germany, Munchen**
Kontron Hochfrequenz GmbH, TEL: (08165) 77-376

Distributors

CA **Cupertino**
Western Microtecnology Inc., 408-725-1660
MA **Wilmington**
RC Components, 617-273-1860

Heurikon

Heurikon Corporation
3201 Latham Drive
Madison, Wisconsin 52713
800-356-9602

Hewlett-Packard

Hewlett-Packard-Logic Systems Division
Centennial Annex D2, P.O. Box 617
Colorado Springs, Colorado 80901-0617
303-590-1900

Sales Office & Representatives

AL **Huntsville**
The Novus Group, 205-881-2207
CA **El Toro**
Martronix, 714-855-6397
CA **Fallbrook**
Martronix, 619-728-7678
CA **Mountain View**
Weseloh-Swanson, 415-961-0565
CA **Newbury Park**
Martronix, 714-858-0632
CO **Parker**
Technology Marketing Associates, 303-841-3435
FL **Melbourne**
EMS Incorporated, 305-724-1027
FL **Plantation**
EMS Incorporated, 305-587-7146
FL **Sarasota**
EMS Incorporated, 813-923-2804
GA **Lilburn**
The Novus Group, 404-381-1015
IL **Schaumburg**
Gassner & Clark Company, 312-882-8608
IA **Des Moines**
The Beams Company, 515-255-1148
KS **Shawnee Mission**
The Beams Company, 913-631-0300
MD **Marriottsville**
Neal Deoul Associates, 301-795-5775
MD **Owings Mills**
Neal Deoul Associates, 301-363-4311
MA **Wakefield**
Howard C. Jappe Company, 617-245-9359
MN **Eden Prairie**
Electromark, 612-944-5850
MO **St. Louis**
The Beams Company, 314-434-8448
NJ **Flander**
K & R Engineering , 201-584-5235, (Outside NJ) 800-631-9362;(NJ) 800-452-9767
NY **North Syracuse**
Advanced Components, 315-699-2671
NC **Raleigh**
The Novus Group, 919-872-3966
OH **Cleveland**
Arthur H. Baier Company, 216-461-6161
PA **Newtown**
Yax Associates, 215-860-2540
TX **Irving**
Kite Electronics, 214-438-9336
UT **Salt Lake City**
Technology Marketing Associates, 801-483-1009
Can **Scarborough, Ontario**
Bestec Electronics, 416-293-1391
Intl **Australia, Victoria**
M.B. & K.J. Davidson, TEL: 03/568-1933
Intl **Denmark, Ballerup**
Tage Olsen A/S, TEL: 02/658111
Intl **France, Les Ulis Cedex**
Microel, TEL: (6) 907-08-24
Intl **Israel, Tel Aviv**
Rapac Electronics Ltd., TEL: 477115/6/7
Intl **Italy, Milano**
Tekelec Airtronic S.R.L., TEL: 02/7380641/2
Intl **Japan, Tokyo**
Microtek, Inc., TEL: 81-3-363-2317
Intl **Netherlands, Oosterhout**
Klaasing Electronics B.V., TEL: 01620-51400
Intl **Norway, Oslo**
Elektronix, TEL: 02-22-9850
Intl **Sweden, Bromma**
Scancopter AB, TEL: 08/289425
Intl **Switzerland, Dietikon**
Altrac AG, TEL: 01/7414644
Intl **United Kingdom, Middlesex**
Pascall Electronics Ltd., TEL: (09327) 87418 or (01) 979 0123
Intl **West Germany, Nauheim**
Emtron Electronic Vertriebs GmbH, TEL: (06152) 6003

HHB-Softron

HHB-Softron
1000 Wyckoff Ave.
Mahwah, New Jersey 07430
201-848-8000

Hilevel Technology

Hilevel Technology, Inc.
18902 Bardeen
Irvine, California 92715
714-752-5215
1-800-HILEVEL

Sales Office & Representatives

AL **Huntsville**
SRI Branches, 205-882-1691 or 1692
AZ **Phoenix**
Odyssey 1, 602-246-8846
CA **Costa Mesa**
Ward/Davis Associates, 714-556-0955
CA **Redondo Beach**
Ward/Davis Associates, 213-643-6977
CA **San Diego**
Ward/Davis Associates, 619-292-1000
CA **Santa Clara**
Ward/Davis Associates, 408-245-3700
CO **Englewood**
Odyssey 1, 303-773-8176
FL **Coral Springs**
SRI Branches, 305-753-6700
FL **Largo**
Synergetic, 813-586-2871
FL **Melbourne**
SRI Branches, 305-254-5353
GA **Atlanta**
SRI Branches, 404-446-6224 or 6225
IL **Chicago**
Berndt Associates, 312-283-0713
IN **Carmel**
Berndt Associates, 317-844-0114
IA **Cedar Rapids**
Palatine Engineering, 319-365-8071
KS **Mission**
Palatine Engineering, 913-831-0555
KS **Wichita**
Palatine Engineering, 316-262-1020
MD **Baltimore**
Electronic Marketing Associates, 301-744-7700
MD **Richmond**
Electronic Marketing Associates, 804-320-8801

Hilevel Technology (Cont)

MD	**Washington**	Electronic Marketing Associates, 301-881-5300
MA	**North Reading**	Martindale Associates Inc, 617-664-0355
MN	**Milwaukee**	Berndt Associates, 612-546-2021
MN	**Minneapolis**	Berndt Associates, 612-546-2021
MO	**Blue Springs**	Palatine Engineering, 816-229-4007
NM	**Albuquerque**	Odyssey 1, 505-265-6645
NY	**Port Chester**	Radiation Electronics Inc, 914-937-2300
NY	**Syracuse**	Martindale/Paul, Inc, 315-487-0515
NC	**Raleigh**	SRI Branches, 919-878-1705
OK	**Tulsa**	Data Marketing Associates, 918-299-4818
OR	**Beaverton**	Northwest Test and Measurement, 503-646-9966
PA	**King of Prussia**	Electronic Marketing Associates, 215-265-1600
PA	**Philadelphia**	Electronic Marketing Associates, 215-248-5050
PA	**Plymouth Meeting**	Electronic Marketing Associates, 215-828-7400
PA	**Wilmington**	Electronic Marketing Associates, 302-652-5333
TX	**Austin**	Data Marketing Associates, 512-451-5174
TX	**Dallas**	Data Marketing Associates, 214-661-0300
TX	**Houston**	Data Marketing Associates, 713-780-2511
TX	**San Antonio**	Data Marketing Associates, 512-342-3031
WA	**Redmond**	Northwest Test and Measurement, 206-881-8857
WI	**Milwaukee**	Berndt Associates, 414-545-8400
Intl	**England, High Wycombe, Buckshires**	Microsystems Services, TEL: (04) 944-1661
Intl	**France, Versailles**	M. B. Electronique, TEL: (03) 956-8131
Intl	**Germany, Munich**	Wavetek Electronics GMSH, TEL: (89) 461090
Intl	**Israel, Tel Aviv**	RDT Electronics Ltd., TEL: 3-483-2115
Intl	**Japan, Tokyo**	Toyo Corporation, TEL: 3-279-0771
PR	**San Juan**	SRI Branches, 809-762-2688

Hitachi

Hitachi America, Ltd.
2210 O'Toole Ave.
San Jose, California 95131
408-942-1500
TELEX: 17-1581
TWX: 910-338-2103

Sales Office & Representatives

AL	**Huntsville**	Technology Mktg. Assocs., Inc., 205-883-7893
AZ	**Tempe**	System Sales of Arizona Inc., 602-829-9338
CA	**Calabasas**	Quadrep Central Inc., 818-887-3711
CA	**Irvine**	Hitachi District Office, 714-553-8500
CA	**Irvine**	Quadrep South Inc., 714-261-8141
CA	**San Diego**	Quadrep-SR Electronics, 619-560-8330
CA	**San Jose**	Quadrep, Inc., 408-946-4000
CA	**San Jose**	Western Regional Office, 408-277-0712
CA	**Woodland Hills**	Hitachi Southwest Regional Sales Office, 818-704-6500
CO	**Denver**	Parker-Webster Co., 303-841-4888
CT	**Yalesville**	Technology Sales, Inc., 203-269-8853
FL	**Ft. Lauderdale**	Hitachi Southeast Regional Office, 305-491-6154
FL	**Largo**	Technology Marketing Assoc. Inc., 813-536-3796
FL	**Melbourne**	Technology Marketing Assoc., Inc., 305-676-3776
FL	**Orlando**	Technology Mktg. Assocs., Inc., 305-857-3760
FL	**Pompano Beach**	Technology Mktg. Assocs., Inc., 305-942-0774
GA	**Atlanta**	Hitachi District Office, 404-843-3445
GA	**Atlanta**	Technology Mktg. Assocs., Inc., 404-257-0374
IL	**Itasca**	Hitachi North Central Regional Sales Office, 312-773-4864
IL	**Rolling Meadows**	Sumer Inc., 312-991-8500
IL	**Woodale**	Time Electronics, 312-350-0610
IN	**Indianapolis**	Elctrn. Sales & Engrg., Inc., 317-849-4260
IN	**Kokomo**	M. Gottlieb Assoc., Inc., 317-455-0444
MD	**Columbia**	Robert Elctrn. Sales, 301-995-1900
MA	**Burlington**	Eastern Regional Office, 617-229-2150
MA	**Waltham**	Technology Sales, Inc., 617-647-5700
MI	**Dearborn**	Hitachi District Office, 313-271-4410
MI	**Plymouth**	Jay Marketing, 313-459-1200
MN	**Bloomington**	Hitachi District Office, 612-831-0408
MN	**Minneapolis**	Comstrand, Inc., 612-788-9234
MO	**St. Louis**	West & Associates, 314-997-1014
NJ	**Kenilworth**	Hitachi District Office, 201-245-6400
NJ	**Parsippany**	Technology Sales Inc., 201-263-0045
NM	**Albuquerque**	SSA, Inc. of New Mexico, 505-881-8877
NY	**Fairport**	Technology Sales Inc., 716-223-7500
NY	**Poughkeepsie**	Hitachi District Office, 914-485-3400
NC	**Charlotte**	Robert Electronic Sales, 704-563-1223
NC	**Raleigh**	Robert Electronic Sales, 919-878-4415
OH	**Beachwood**	Thompson & Assocs., 206-831-6277
OH	**Columbus**	Thompson & Assocs., 614-272-2086
OH	**Dayton**	Thompson & Assocs., 513-435-7733
OK	**Tulsa**	West & Assocs., 918-665-3465
OR	**Portland**	Crown Elctrns., 503-620-8320
OR	**Potland**	Hitachi District Office, 503-245-1825
PA	**Horsham**	Technology Sales Inc., 215-675-8600
TN	**Knoxville**	M. Gottlieb Assoc. Inc., 615-966-1314
TX	**Austin**	West & Assocs., 512-454-3681
TX	**Dallas**	Hitachi Southern Region Sales Office, 214-991-4510
TX	**Dallas**	West & Assocs., 214-248-7060
TX	**Houston**	Hitachi District Office, 713-974-0534
TX	**Houston**	West & Assocs., 713-777-4108
UT	**Salt Lake City**	Parker-Webster Co., 801-266-9939
VA	**Richmond**	Robert Elctrns. Sales, 804-276-3979
WA	**Bellevue**	Crown Elctrns., 206-643-8100
WA	**Greenacres**	Crown Elctrns., 509-924-4410
WI	**Brookfield**	Sumer Inc., 414-784-6641
Can	**Coquitlam, Britishl Columbia**	Longman Sales, 604-931-4744
Can	**Kirkland, Quebec**	Longman Sales Inc., 514-694-3911
Can	**Mississauga, Ontario**	Longman Sales Inc., 416-677-8100
Can	**Ottawa, Ontario**	Longman Sales Inc., 613-564-0100
PR	**San German, Puerto Rico**	Technology Sales Inc., 809-892-4745

Distributors

AL	**Huntsville**	Marshall Industries, 205-881-9235
AL	**Huntsville**	RM Elctrns., 205-852-1550
AZ	**Phoenix**	Sterling Electronics, 602-268-2121
AZ	**Scottsdale**	Western Micro Technology, 602-948-4240
AZ	**Tempe**	Marshall Inds., 602-968-6181
CA	**Anaheim**	Time Electronics, 714-937-0911
CA	**Canoga Park**	Marshall Inds., 213-999-5001
CA	**Chatsworth**	Diplomat Elctrns, 818-341-4411
CA	**Chatsworth**	Diplomat-Westates Electronics, 213-341-4411
CA	**Chatsworth**	IEC, 213-998-2200
CA	**Chatsworth**	Time Elctrns., 818-998-7200
CA	**Costa Mesa**	Diplomat Elctrns, 714-549-8401
CA	**Cupertino**	Western Micro Technology, 408-725-1660
CA	**El Monte**	Marshall Industries, 816-442-7204
CA	**Irvine**	IEC, 714-660-1055

Hitachi (Cont)

DIPLOMAT

Call Diplomat First For

HITACHI

- ■ San Francisco, CA (408) 734-1900
- ■ Los Angeles, CA (818) 700-8700
- ■ Orange County, CA (714) 549-8401
- ■ San Diego, CA (619) 292-5693
- ■ Salt Lake City, UT (801) 486-4134
- ■ Minneapolis, MN (612) 559-2500
- ■ Denver, CO (303) 422-9229
- ■ Austin, TX (512) 452-5254
- ■ Dallas, TX (214) 980-1888
- ■ Houston, TX (713) 496-4000
- ■ Chicago, IL (312) 595-1000
- ■ Boston, MA (617) 935-6611
- ■ Danbury, CT (203) 797-9674
- ■ Melville, NY (516) 454-6400
- ■ Syracuse, NY (315) 652-5000
- ■ Cherry Hill, NJ (609) 751-0440
- ■ Totowa, NJ (201) 785-1830
- ■ Philadelphia, PA (215) 546-3730
- ■ Columbia, MD (301) 995-1226
- ■ Atlanta, GA (404) 449-4133
- ■ Clearwater, FL (813) 443-4514
- ■ Fort Lauderdale, FL (305) 974-8700

DIPLOMAT ELECTRONICS CORPORATION

CA	**Irvine**	Marshall Industries, 714-660-0951
CA	**Irvine**	Ryno Electronics, 714-261-2500
CA	**Milpitas**	Marshall Inds., 408-943-4600
CA	**Rancho Cordova**	Marshall Industries, 916-635-9700
CA	**Sacramento**	IEC, 916-424-5297
CA	**San Diego**	Marshall Inds., 619-578-9600
CA	**San Diego**	Ryno Electronics, 619-453-8430
CA	**San Diego**	Time Electronics, 619-586-1331
CA	**San Jose**	IEC, 408-263-1100
CA	**Santa Clara**	CETEC Electronics, 408-748-8550
CA	**Sunnyvale**	Diplomat Elctrns, 408-734-1900
CA	**Sunnyvale**	Time Elctrns., 408-734-9888
CA	**Torrance**	Time Elctrns., 213-320-0880
CA	**Tustin**	Image Electronics, 714-730-0303
CO	**Denver**	IEC, 303-292-6121, 800-525-3367
CO	**Denver**	Marshall Inds., 303-427-1818
CO	**Englewood**	Time Electronics, 303-799-8851
CO	**Wheat Ridge**	Diplomat Electronics, 303-422-9229
CT	**Orange**	Milgray Elctrns., 203-795-0711
CT	**Wallingford**	Cronin Electronics, 203-265-3134
CT	**Wallingford**	Marshall Industries, 203-265-3822
FL	**Clearwater**	Diplomat Elctrns, 813-443-4514
FL	**Fort Lauderdale**	Time Elctrns., 305-974-4800
FL	**Ft. Lauderdale**	Marshall Inds., 305-928-0661
FL	**Ft. Lauderdale**	Time Electronics, 305-974-4800
FL	**Orlando**	Time Electronics, 305-841-6565
FL	**Tampa**	Reptron Electronics, Inc., 813-855-4656
FL	**Winter Park**	Milgray Elctrns., 305-647-5747
GA	**Atlanta**	Milray Electronics, 404-393-9666
GA	**Norcross**	Diplomat Elctrns, 404-449-4133
GA	**Norcross**	Marshall Industries, 404-923-5750
GA	**Norcross**	Time Electronics, 404-448-4448
IL	**Bensenville**	Diplomat Elctrns, 312-595-1000
IL	**Hoffman Estates**	IEC, 312-843-2040
IL	**Schaumburg**	Marshall Inds., 312-490-0155
IL	**Schaumburg**	Reptron Electronics, 312-882-1700
IN	**Indianapolis**	Marshall Industries, 317-297-0483
IN	**Indianapolis**	RM Elctrns., 317-291-7110
KS	**Lenexa**	Marshall Industries, 913-492-3121
KS	**Overland Park**	Milgray Elctrns., 913-236-8800
MD	**Beltsville**	Resco/Beltsville, 301-937-9100
MD	**Columbia**	Diplomat Elctrns, 301-995-1226
MD	**Columbia**	Time Electronics, 301-964-3090
MD	**Gaithersburg**	Marshall Industries, 301-840-9450
MD	**White Marsh**	Resco/Baltimore, 301-529-0500
MA	**Burlington**	Marshall Industries, 617-272-8200
MA	**Burlington**	Milgray Electronics, 617-272-6800
MA	**Needham**	Cronin Electronics, 617-449-5000
MA	**Peabody**	Time Electronics, 617-532-6200
MA	**Wilmington**	R C Comps., Inc., 617-273-1860, 800-225-0818
MA	**Woburn**	Diplomat Electronics, 617-935-6611
MI	**Grand Rapids**	RM Elctrns., 616-531-9300
MI	**Livonia**	Marshall Industries, 313-525-5850
MI	**Livonia**	Reptron, 313-525-2700
MN	**Bloomington**	Time Electronics, 612-944-9192
MN	**Minneapolis**	Industrial Components, 612-831-2666
MN	**Plymouth**	Diplomat Electronics, 612-559-2500
MN	**Plymouth**	Marshall Inds., 612-559-2211
MO	**St. Louis**	Time Elctrns., 314-391-6444
NJ	**Clifton**	Vantage Components, 201-777-4100
NJ	**Fairfield**	Marshall Industries, 201-882-0320
NJ	**Marlton**	Milgray Electronics, 609-983-5010
NJ	**Mt. Laurel**	Marshall Industries, 609-234-9100
NJ	**Perth Amboy**	Sterling Elctrns., 201-442-8000
NJ	**Totowa**	Diplomat Elctrns, 201-785-1830
NM	**Albuquerque**	Sterling Electronics, 505-884-1900
NY	**Farmingdale**	Milgray Elctrns., 516-420-9800
NY	**Hauppauge**	Marshall Industries, 516-273-2424
NY	**Hauppauge**	Time Elctrns., 516-273-0100
NY	**Johnson City**	Marshall Industries, 607-798-1611
NY	**Liverpool**	Diplomat Elctrns, 315-652-5000
NY	**Melville**	Diplomat Elctrns, 516-454-6334
NY	**Rochester**	Marshall Ind., 716-235-7620
NC	**Raleigh**	Marshall Industries, 919-878-9882
NC	**Raleigh**	Resco/Raleigh, 919-781-5700
OH	**Cleveland**	CAM/RPC, 216-461-4700
OH	**Cleveland**	Milgray Elctrns., 216-447-1520
OH	**Dayton**	Marshall Inds., 513-236-8088
OH	**Dublin**	Time Electronics, 614-761-1100
OH	**Solon**	Marshall Inds., 216-248-1788
OH	**Worthington**	Repton Elctrns., 614-436-6675
OR	**Beaverton**	Marshall Electronics, 503-644-5050
OR	**Beaverton**	Western Micro Technology, 503-629-2082
OR	**Portland**	Time Electronics, 503-684-3780
OR	**Tigard**	IEC, 503-639-9661
PA	**King of Prussia**	Time Elctrns., 215-337-0900
PA	**Philadelphia**	Almo Electronics, 215-698-4000
PA	**Pittsburgh**	CAM/RPC, 412-782-3770
PA	**Pittsburgh**	Marshall Industries, 412-963-0441
TX	**Austin**	Active Component Technology, 512-452-5254
TX	**Austin**	Diplomat Electronics, 512-452-5254
TX	**Austin**	Marshall Industries, 512-837-1991
TX	**Austin**	Sterling Electronics, 512-836-1451
TX	**Carrollton**	Time Electronics, 214-241-7441
TX	**Dallas**	Diplomat Electronics, 214-980-1888
TX	**Dallas**	Marshall Inds., 214-233-5200
TX	**Dallas**	RM Elctrns., 214-869-2080
TX	**Dallas**	Sterling Elctrns., 214-243-1600

Hitachi (Cont)

TX	**Houston** Diplomat Electronics, 713-975-8447
TX	**Houston** Marshall Inds., 713-789-6600
TX	**Houston** Sterling Elctrns., 713-627-9800
UT	**Salt Lake City** Diplomat Elctrns., 801-486-4134
UT	**Salt Lake City** Marshall Industries, 801-261-0901
VA	**Richmond** Sterling Elctrns., 804-266-2190
WA	**Bellevue** IEC/JACO, 206-455-2727
WA	**Bellevue** Marshall Inds., 206-747-9100
WA	**Redmond** Time Electronics, 206-882-1600
WA	**Redmond** Western Micro Technology, 206-881-6737
WI	**Milwaukee** Marsh Electronics, 414-475-6000
WI	**New Berlin** RM Electronics, 414-784-4420
Can	**Downsview, Ontario** Future Elctrns., 416-638-4771
Can	**Montreal Quebec** Space Electronics Sales Corp., 514-967-8676
Can	**Ottawa, Ontario** Space Electronics Sales Corp., 613-596-5340
Can	**Toronto, Ontario** Space Electronics Sales Corp., 416-636-8814
Can	**Vancouver, British Columbia** Space Electronics Sales Corp., 604-437-3611

Holt

Holt, Inc.
9351 Jeronimo Road
Irvine, California 92718
714-859-8800
TELEX: 753307

Sales Office & Representatives

AZ	**Scottsdale** American Marketing Representatives, 602-948-2778
CA	**Laguna Hills** English/Damco Sales Associates, 714-837-3801
CA	**San Jose** Custom Technology Sales, 408-252-9901
CT	**New Fairfield** Kimble Associates, 203-746-6011
FL	**Fort Lauderdale** Dyne-A-Mark Corp, 305-771-6501
MD	**Baltimore** Conroy Sales, 301-296-2444
NJ	**Fairfield** Addem Sales, 201-882-0993
NJ	**Pennsauken** Vantage Sales Company, 609-663-6660
NM	**Albuquerque** Reptronix, 505-292-1718
NY	**Albany** Reagan/Compar Albany, Inc., 518-489-4777
TX	**Richardson** Bonser-Philhower Sales, 214-234-8438
WA	**Bellevue** Quest Marketing Inc., 206-747-9424

Honeywell

Honeywell-Signal Processing Technologies
1150 East Cheyenne Mountain Blvd.
Colorado Springs, Colorado 80906
303-577-1000

Specific product information:
Jil Goebel

Sales Office & Representatives

AL	**Huntsville** REP, Inc., 800-633-2050
AZ	**Phoenix** ISDS, 602-971-6250
CA	**Agoura Hills** ISDS, 818-707-2366
CA	**Los Angeles** ISDS, 818-883-7130
CA	**San Diego** ISDS, 619-571-1544
CA	**Santa Ana** ISDS, 714-973-2162
CA	**Santa Clara** Emerging Technology Sales, 408-727-1771
CO	**Boulder** Luscombe Engineering Company, 303-772-3342
CT	**Bloomfield** Astrorep, Inc., 617-938-6692
FL	**Boca Raton** Perrott Associates, Inc., 305-792-2211
FL	**Clearwater** Perrott Associates, Inc., 813-443-5214
FL	**Orlando** Perrott Associates, Inc., 305-298-7748
GA	**Tucker** REP, Inc., 404-938-4358
MD	**Linthicum Heights** K-D Associates, 301-859-5151
MA	**Boston** Honeywell SPT, 617-923-7622
MA	**Marblehead** Electronic Marketing Associates, 617-631-2886
NJ	**Perth Amboy** Astrorep, Inc., 201-826-8050
NY	**Babylon** Astrorep, Inc., 516-422-2500
NC	**Charlotte** REP, Inc., 919-851-3007
NC	**Raleigh** REP, Inc., 704-563-5554
OR	**Portland** Northwest Marketing Associates, 503-620-0441
TN	**Jefferson City** REP, Inc., 615-475-9012
TX	**Dallas** Technical Marketing Inc., 214-387-3601
WA	**Bellevue** Northwest Marketing Associates, 206-455-5846
Intl	**England, Berkshire** Manhattan Skyline Ltd., TEL: 628-75851
Intl	**Israel, Ramat Gan** M.R.B.D. Ltd., TEL: 972-3-738701
Intl	**Japan, Tokyo** Yamatake-Honeywell Co. Ltd., TEL: (03) 486-2141

Honeywell

Honeywell Digital Product Center
1150 E. Cheyenne Mountain Blvd.
Colorado Springs, Colorado 80906
303-577-3580
TELEX: Telex: 452-433

Specific product information:
Field Sales Representative
Application engineering:
Contact the Factory
Literature:
Field Sales Representative
Price and delivery:
Field Sales Representative
Place an order:
Field Sales Representative
Follow-up an order:
Field Sales Representative
All other information:
Digital Product Center Marketing Department

Hughes

Hughes Aircraft Co.
Solid State Products
500 Superior Avenue
Newport Beach, California 92663
714-759-2727
TWX: 910-596-1374

Sales Office & Representatives

AL	**Huntsville** L&D, Inc., 205-852-1352
AZ	**Phoenix** Compass Marketing & Sales, 602-266-5400
AZ	**Scottsdale** SMS Associates, 602-998-0831
CA	**Campbell** Kottmeier Associates, 408-371-8700
CA	**La Mirada** Select Elctrns., 714-739-8891
CA	**San Diego** Mesa Engineering, 619-278-8021
CO	**Denver** West High Technology, 303-477-8180
FL	**Clearwater** Delmac Sales, 813-447-5192
FL	**Coral Springs** CBC Electronics, 305-755-1111
FL	**Longwood** CBC Electronics, 305-831-5380
FL	**Orlando** Delmac Sales, Inc., 305-898-4688
GA	**Atlanta** L & D, Inc., 404-395-7079
IL	**Elk Grove Village** Carlson Electronic Sales Co., 312-956-8240
IN	**Indianapolis** J & W Sales, 317-842-3740
IA	**Cedar Rapids** Carlson Electronic Sales Co., 319-377-6341
KS	**Shawnee Mission** Technical Sales Assocs., 913-888-3330
MD	**Towson** Arbotek, 301-825-0775
MA	**Wellesley Hills** R.H. Sturdy Co., 617-235-2330
MI	**Livonia** Luebbe Sales, 313-477-3131
MN	**Minneapolis** Bill Deming & Assoc., 612-888-5000
MO	**St. Louis** Technical Sales Assoc., 314-725-5361
NJ	**Marlton** B.G.R. Associates, 609-428-2440

Hughes (Cont)

NM	**Albuquerque** SMS Associates, 505-883-9765
NY	**Bayside** Robert Diamond, Inc., 212-423-7330
NY	**E. Rochester** Tri-Tech Electronics, Inc., 716-385-6500
NY	**Endwell** Tri-Tech Electronics, Inc., 607-754-1094
NY	**Fayetteville** Tri-Tech Electronics, Inc., 315-446-2881
NY	**Fishkill** Tri-Tech Electronics, Inc., 914-897-5611
NC	**Greensboro** L & D, Inc., 919-292-3201
NC	**Raleigh** L. & D., Inc., 919-876-5301
OH	**Cincinnati** Luebbe Sales Co., 513-891-5770
OH	**Cleveland** Luebbe Sales Co., 216-333-0425
OH	**Columbus** Luebbe Sales Co., 614-431-0474
OH	**Dayton** Luebbe Sales, 513-294-0426
OK	**Tulsa** Barry Sales, 918-749-7775
PA	**Pittsburgh** Luebbe Sales Co., 412-931-0414
TX	**Austin** Barry Sales, 512-837-3616
TX	**Houston** Barry Sales, 713-784-5860
TX	**Richardson** Barry Sales, 214-234-0255
UT	**Murray** West High Technology, 801-262-9403
UT	**Salt Lake City** Sage Sales & Co., 801-467-5451
UT	**Salt Lake City** West High Technology, 801-466-5739
VA	**Richmond** L&D Inc., 804-257-7717
WI	**Milwaukee** Carlson Electronic Sales Co., 414-476-2790
Can	**Calgary, Alberta** Vitel Electronics, 413-243-6022
Can	**Mississauga, Ontario** Vitel Electronics, 416-676-9720
Can	**Ottawa, Ontario** Vitel Electronics, 613-592-0090
Can	**St. Laurent, Quebec** Vitel Electronics, 514-331-7393
Can	**Vancouver, BC** Solution Electronic Sales, 604-438-0679
Intl	**India, Bombay** Khandelwal Herrmann Electronics Ltd., TEL: 202-0358
Intl	**India, Trivandrum 695003, Kowdiar** Kryonix, TEL: 63805

Distributors

Intl	**Australia** Becos Ges, TEL: 0043-222-834101
Intl	**Australia** Computer Components, TEL: 8083605
Intl	**Belgium, Brussels** Auriema, TEL: (02) 5236295
Intl	**Denmark, Silkeborg** Micronor, TEL: (06) 816522
Intl	**England, Romford Essex** Pelco Electronics, TEL: 0273722155
Intl	**France, Boulogne** Intl. Semiconductor Corp., TEL: 6085275
Intl	**France, Paris** RTF Diffusion, TEL: 5311650
Intl	**Germany, Martinsned** Atlantik Elektronik
Intl	**Hong Kong, Kowloon** Tektron Elctrns., Ltd., TEL: 856199
Intl	**Israel, Bnei Brak** MLRN Electronics, TEL: 3707129
Intl	**Italy, Milano** Cefra, TEL: (02) 235264
Intl	**Japan, Tokyo** Nihon Teksel Co., Ltd., TEL: 461-5904
Intl	**Netherlands** Konig en Hartman
Intl	**Norway, Kaldbakken** Henaco, TEL: 472162110
Intl	**Singapore** Taiga Electronics, TEL: 2214156
Intl	**Spain, Madrid** Anatronic, TEL: (01) 2424455
Intl	**Sweden, Stockholm** Allhabo Elektronik, TEL: (08) 224600
Intl	**Switzerland, Schluren** Abelec
Intl	**Taiwan, Taipei** Sertek, TEL: (02) 7134022
Intl	**West Germany** Astronic, TEL: (089) 309031
Intl	**West Germany** Endrich

Hybrid Systems

Hybrid Systems Corporation
22 Linnell Circle
Billerica, Massachusetts 01821
617-667-8700
TWX: 710-347-1575

Specific product information:
Henry Diamond, National Sales Manager .... ext. 60
Art Berg, East Coast Regional Sales Manager ...... ext. 13

Price and delivery:
Patricia G. Bradley .... ext. 12

All other information:
Janet J. Ray .... ext 14

Sales Office & Representatives

Intl	**Australia, Asquith NSW** Computer & Peripheral Sales Pty Ltd., TEL: (02) 476-6400
Intl	**Austria, Wien** Becos Elctrn. Ges. MBH
Intl	**Denmark, Copenhagen** Scansupply, TEL: 835090
Intl	**England, Camberley, Surrey** Hybrid Co. Comp. U.K. Ltd. Camberley, TEL: 0276/28128
Intl	**Finland, Helsinki** Carlo Casagrande Oy, TEL: 857121677
Intl	**France, Rungis** Hybrid Sys. S.A.R.L., TEL: 33-1687-8336
Intl	**Germany, Darmstadt** Hybrid Sys. GmbH, TEL: 06151-291595
Intl	**Israel, Herzlia** Vectronics Ltd., TEL: 052 56070
Intl	**Italy, Milano** Celte S.R.L., TEL: 2-296960
Intl	**Japan, Tokyo** H.Y. Associates Co., Ltd., TEL: 3-396-8457
Intl	**Netherlands, Delft** Koning en Hartman, TEL: 156-09906
Intl	**Norway, Hvalstad** Estronic A/S, TEL: 02-7860-10
Intl	**Norway, Oslo** Elektronix A/S
Intl	**South Africa, Capetown** Microsource, TEL: 021457721
Intl	**Sweden, Vallingby** Svensk Teleindustri, TEL: 08380320
Intl	**Switzerland, Zurich** Dimos AG, TEL: 1-626140

Hy Comp

Hy Comp Inc.
75 Union Avenue, Box 377
Sudbury, Massachusetts 01776
617-443-4631

Application engineering:
John J. Madden

Follow-up an order:
Customer Services:
Nancy Oelschlegel

All other information:
James Chacharone, V.P./Marketing Manager

Hyundai

Hyundai Electronics America
2191 Laurelwood Road
Santa Clara, California 95054
408-986-9800
TELEX: 278841

IBM

IBM
1133 Westchester Ave.
White Plains, New York 10604
914-696-1197

ILC Data Device

ILC Data Device Corp.
105 Wilbur Place
Bohemia, New York 11716
516-567-5600
TWX: 510-228-7324

Sales Office & Representatives

Intl	**England, Berkshire** DDC United Kingdom, Ltd., TEL: 44-635-40158
Intl	**England, London** ILC Data Device Corp., TEL: 44-1-3874689
Intl	**Finland, Helsinki** OY Suomen Bofors AB, TEL: 358-0-553-166
Intl	**France, Courbevoie** DDC Electronique, TEL: 33-1-333-5888
Intl	**Holland, Haaften** Techmation Electronics B.V., TEL: 31-4189-2222
Intl	**India, New Delhi** Inde Assoc., TEL: 5719087
Intl	**Israel, Tel Aviv** R D T Elctrns., TEL: 972-3-48.32.11
Intl	**Italy, Milan** Microelit Italia s.r.l., TEL: 39-2-469 0444
Intl	**Italy, Roma** Microelit Italia, s.r.l., TEL: 77-9-011-39-6-890892
Intl	**Japan, Kangawa-Keh** Minebea Co., Ltd., TEL: 77-9-011-81-3-763-6241 466-227151
Intl	**Norway, Oslo** Henaco A/S, TEL: 77-9-011-47-2-162110
Intl	**Spain, Madrid** Anatronic, S.A., TEL: 34-1-2424455
Intl	**Sweden, Tyreso** Hybridteknik A/B, TEL: (08) 770-00-50
Intl	**Taiwan, Taipei** Tai I Trading Co., Ltd., TEL: 886-2-704-6335
Intl	**West Germany, Landsberg AL** D D C Elektronik GmbH, TEL: 49-8191-3105
Intl	**Yugoslavia, Titova** Elektrotehna, TEL: 61-329745

Industrial Computer Designs

Industrial Computer Designs
31121 Via Colinas ½ 1005
Westlake Village, California 91362
213-889-3179

Inmos

Inmos
P.O. Box 16000
Colorado Springs, Colorado 80935
303-630-4000
TWX: 910-920-4904

Specific product information:
Field Sales Offices
Application engineering:
Applications 303-630-4493
Literature:
Field Sales Offices
Place an order:
Field Sales Offices/Distributors
All other information:
Marketing 303-630-4361

Sales Office & Representatives

AL	**Huntsville** Macro-Marketing Assoc., 205-883-9630
AZ	**Phoenix** Compass Mktg. & Sales, 602-996-0635
AZ	**Tucson** Compass Mktg., 602-293-1220
CA	**Irvine** Centaur Corporation, 714-261-2123
CA	**San Diego** Centaur Corp., 619-278-4950
CA	**San Diego** Hadden Assoc., 619-565-9444
CA	**San Jose** Inmos Sales, 408-298-1786
CA	**Santa Clara** Criterion Sales, 408-988-6300
CA	**Torrance** Inmos Sales, 213-530-7764
CA	**Woodland Hills** Centaur Corporation, 818-704-1655
CO	**Denver** Component Sales, 303-779-8060
CT	**Brookfield** Kanan Assoc., 203-775-0494
FL	**Maitland** E.I.R., Inc., 305-660-9600
FL	**N. Lauderdale** E.I.R. Inc., 305-975-8718
GA	**Atlanta** Inmos Sales, 404-475-1936
GA	**Norcross** Macro-Marketing Assoc., 205-883-9630
IL	**Schaumburg** Micro-Tex, 312-885-1131
IN	**Carmel** Giesting & Associates, 317-844-5222
IN	**Indianapolis** Elctrns. Mktg. Consultants, 317-253-1668
KS	**Kansas City** B.C. Electronic Sales, 913-342-1211
KS	**Wichita** B.C. Electronic Sales, 316-722-0104
MD	**Baltimore** Inmos Sales, 301-995-0813
MD	**Severna Park** New Era Sales, 301-544-4100
MA	**Needham Heights** Kanan Assoc., 617-449-7400
MA	**Westborough** Inmos Sales, 617-366-4020
MI	**Coloma** Giesting & Associates, 616-468-4200
MI	**Farmington Hills** Giesting & Associates, 313-478-8106
MN	**Edina** Mel Foster Tech Sales, 612-941-9790
MN	**Minneapolis** Inmos Sales, 612-831-5626
MO	**St. Louis** B.C. Electronic Sales, 314-291-1101
NJ	**Teaneck** R.T. Reid Assoc., 201-692-0200
NM	**Albuquerque** Compass Mktg. & Sales, 505-888-0800
NY	**Melville** R.T. Reid Assoc., 516-351-8833
NY	**Rochester** L-Mar Assoc., 716-323-1000
NC	**Raleigh** CSR Electronics Inc., 919-878-9200
OH	**Beachwood** E.S.I., 216-831-9555
OH	**Cincinnati** Giesting & Associates, 513-385-1105
OK	**Tulsa** B.P. Sales, 918-744-9964
OR	**Portland** Westerberg & Assoc., 503-620-1931
PA	**Huntingdon Valley** Knowles Assoc., 215-322-7100
TX	**Austin** B.P. Sales, 512-346-9186
TX	**Houston** B.P. Sales, 713-531-4144
TX	**Richardson** B.P. Sales, 214-234-8438
UT	**Salt Lake City** Component Sales, 801-268-8440
WA	**Bellevue** Westerberg & Assoc., 206-453-8881
WI	**Waukesha** Micro-Tex, 414-542-5352
Can	**Downsview, Ontario** Har-Tech Electronics, 416-665-7773
Can	**Ottawa, Ontario** Har Tech Elctrns., 613-230-8431
Can	**Pointe Claire, Quebec** Har-Tech Electronics, 514-694-6110
Intl	**Australia** ACE Electronics Pty. Ltd., TEL: 02-2111144
Intl	**France, Paris** Inmos SARL, TEL: 01-687-2201
Intl	**Hong Kong, Hong Kong** PALIMAX, TEL: 5-468161
Intl	**Italy, Milan** Cefra SRL, TEL: 392-235264
Intl	**Japan, Tokyo** Matsushita Electric, TEL: 03-435-4501
Intl	**Korea** Tess-KO Enterprises, TEL: 02-7542454
Intl	**Singapore** CALTRON, TEL: 4567222
Intl	**Taiwan** Helm Engineering, TEL: 02-7091888
Intl	**United Kingdom, Bristol** Inmos Sales, TEL: 02-722-90861
Intl	**United Kingdom, Cheshire** TC Electronics, TEL: 061-427-2020
Intl	**United Kingdom, Herts** Dexter Electronics, TEL: 0438-65551
Intl	**United Kingdom, Lanarkshire** Stuart Electronics, TEL: 0555-892-393
Intl	**United Kingdom, West Sussex** Hartech Ltd., TEL: 0243-773511
Intl	**West Germany** Inmos Sales, TEL: 089-319-1028

Distributors

AL	**Huntsville** Arrow Elctrns., 206-882-2730
AL	**Huntsville** Pioneer-Standard, 205-837-9300
AZ	**Phoenix** Wyle, 602-866-2888
AZ	**Tempe** Anthem Elctrns., 602-966-6600
AZ	**Tempe** Arrow Elctrns., 602-968-4800
CA	**Chatsworth** Anthem Elctrns., 213-700-1000
CA	**Chatsworth** Arrow Electronics, 818-701-7500
CA	**El Segundo** Wyle, 213-322-8100
CA	**Hayward** Arrow Elctrns., 415-487-4300
CA	**Irvine** Anthem Electronics, 714-768-4444
CA	**Irvine** Wyle, 714-863-9953
CA	**Sacramento** Wyle, 916-638-5282
CA	**San Diego** Anthem Elctrns., 619-453-4871
CA	**San Diego** Arrow Elctrns., 619-565-4800
CA	**San Diego** Wyle, 619-565-9171
CA	**San Jose** Anthem Elctrns., 408-295-4200
CA	**Santa Clara** Wyle, 408-727-2500
CA	**Sunnyvale** Arrow Elctrns., 408-745-6600
CA	**Tustin** Arrow Elctrns., 714-838-5422
CO	**Denver** Arrow Elctrns., 303-696-1111
CO	**Englewood** Anthem Electrns., 303-790-4500
CO	**Thornton** Wyle, 303-457-9953
CT	**Milford** Falcon Elctrns., 203-878-5272
CT	**Wallingford** Arrow Elctrns., 203-265-7741
FL	**Ft. Lauderdale** Arrow Elctrns., 305-776-7790
FL	**Ft. Lauderdale** Pioneer Standard, 305-428-8877
FL	**Orlando** Pioneer Standard, 305-834-9090
FL	**Palm Bay** Arrow Elctrns., 305-725-1480
GA	**Norcross** Arrow Elctrns., 404-449-8252
GA	**Norcross** Pioneer Standard, 404-448-1711
IL	**Chicago** Pioneer Standard, 312-437-9680
IL	**Schaumburg** Arrow Elctrns., 312-397-3440
IN	**Indianapolis** Arrow Elctrns., 317-243-9353
IN	**Indianapolis** Pioneer Standard, 317-849-7300
IA	**Cedar Rapids** Arrow Elctrns., 319-395-7230
MD	**Columbia** Arrow Elctrns., 800-842-7769
MD	**Columbia** Lionex Corporation, 301-964-0040
MD	**Gaithersburg** Pioneer Standard, 301-921-0660
MA	**Wilmington** Lionex Corp., 617-657-5170
MA	**Woburn** Arrow Elctrns., 617-933-8130
MI	**Ann Arbor** Arrow Elctrns., 313-971-8220
MI	**Livonia** Pioneer Standard, 313-525-1800

Inmos (Cont)

MN **Edina**
Arrow Elctrns., 612-830-1800
MN **Minnetonka**
Pioneer Standard, 612-935-5444
MO **St. Louis**
Arrow Elctrns., 314-567-6888
NH **Manchester**
Arrow Elctrns., 603-668-6968
NJ **Fairfield**
Arrow Electronics, 201-575-5300
NJ **Fairfield**
Lionex Corp., 201-227-7960
NJ **Moorestown**
Arrow Elctrns., 609-596-8000
NM **Albuquerque**
Arrow Elctrns., 505-243-4566
NY **Hauppauge**
Arrow Elctrns., 516-231-1000
NY **Hauppauge**
Lionex Corp., 516-273-1660
NY **Liverpool**
Arrow Elctrns., 315-652-1000
NY **Melville**
Arrow Elctrns., 516-694-6800
NY **Rochester**
Arrow Elctrns., 716-427-0300
NC **Charlotte**
Pioneer Standard, 704-527-8188
NC **Raleigh**
Arrow Elctrns., 919-876-3132
NC **Winston-Salem**
Arrow Elctrns., 919-725-8711
NC **Winston-Salem**
Arrow Electronics, 919-725-8711
OH **Centerville**
Arrow Elctrns., 513-435-5563
OH **Cleveland**
Pioneer Standard, 216-587-3600
OH **Dayton**
Pioneer Standard, 513-236-9900
OH **Solon**
Arrow Elctrns., 216-248-3990
OK **Tulsa**
Arrow Elctrns., 918-665-7700
OR **Lake Oswego**
Anthem Elctrns., 503-684-2661
OR **Portland**
Arrow Elctrns., 503-684-1690
OR **Portland**
Wyle, 503-640-6000
PA **Horsham**
Lionex Corp., 215-443-5150
PA **Monroeville**
Arrow Elctrns., 412-856-7000
PA **Pittsburgh**
Pioneer Standard, 412-782-2300
TX **Austin**
Arrow Electronics, 512-835-4180
TX **Austin**
Wyle, 512-834-9957
TX **Carrollton**
Arrow Elctrns., 214-380-6464
TX **Houston**
Wyle, 713-879-9953
TX **Richardson**
Wyle, 214-235-9953
TX **Stafford**
Arrow Elctrns., 713-530-4700
UT **Salt Lake City**
Anthem Elctrns., 801-973-8555
UT **Salt Lake City**
Arrow Elctrns., 801-539-1135
UT **Salt Lake City**
Wyle, 801-974-9953
WA **Bellevue**
Arrow Elctrns., 206-643-4800
WA **Redmond**
Anthem Elctrns., 206-881-0850
WA **Seattle**
Wyle, 206-453-8300
WI **Oak Creek**
Arrow Elctrns., 414-764-6600
Can **Baxter Ctr., Ontario**
Future Elctrns., 613-820-8313
Can **Calgary, Alberta**
Future Elctrns., 403-235-5325
Can **Downsview, Ontario**
Future Elctrns., 416-638-4771
Can **Pointe Claire, Quebec**
Future Elctrns., 514-694-7710
Can **Vancouver, British Columbia**
Future Elctrns., 604-438-3321
Intl **Australia, Sydney**
Hawk Electronics, TEL: 61-2-325530
Intl **Austria, Vienna**
Othmar Lackner, TEL: 43-222-752618
Intl **Belgium, Brussels**
Diode, TEL: 322-216-2100
Intl **Denmark, Silkeborg**
Peter Peterson A/S, TEL: 45-683-6211
Intl **Finland, Helsinki**
Field Oy, TEL: 0-6922577
Intl **France**
Scaib SA, TEL: 1-6872313
Intl **France, Paeig**
Tekelec Airtronic, TEL: 1-534-7535
Intl **Ireland, Dublin**
Micro Marketing Ltd., TEL: 0001-856288
Intl **Israel, Tel Aviv**
R.D.T. Elctrns. Ltd., TEL: 03-3483211-9
Intl **Italy, Milan**
Celdis Italiana S.p.A., TEL: 02-6120041
Intl **Netherlands, Haaften**
Techmation Elctrns. BV, TEL: 0-4189-2222
Intl **New York, New York**
Arrow Electronics, Export Div., TEL: 516-293-6363
Intl **Norway, Oslo**
Ola Tandberg Elektro A/S, TEL: 02-269955
Intl **Portugal, Lisbon**
Teleprinta, TEL: 1-54-84-23
Intl **South Africa, Pretoria**
Electronic Building Elements, TEL: 27-12-469-2216
Intl **Spain, Madrid**
Diode Espana, TEL: 1-455-36-86
Intl **Sweden, Stockholm**
AB Gosta Backstrom, TEL: 08-541080
Intl **Switzerland, Zurich-Schlieren**
Datacomp A.G., TEL: 01-7302165
Intl **United Kingdom, Berks**
Kudos Electronics Ltd., TEL: 0734-794515
Intl **United Kingdom, High Wycombe**
Rapid Recall Ltd., TEL: 0494-26271
Intl **United Kingdom, Sunbury on Thames, Middlesex**
Hawke Elctrns., TEL: 01-1979-7799
Intl **West Germany, Munich**
E2000 A.G., TEL: 49-89-420010
Intl **West Germany, Quickborn**
Astek Elctrns., TEL: 4106-71084
Intl **West Germany, Stuttgart**
Ditronic GMBH, TEL: 0711-720010

Innovative Research

Innovative Research, Inc.
17071 Kampen Lane
Huntington Beach, California 92647
714-842-0492

Insouth Microsystems

Insouth Microsystems
3410 Skyway Drive
Opelika, Alabama 36801
205-821-5300

Intech Inc.

Intech Inc.
2270 Martin Avenue
Santa Clara, California 95050
408-988-4930
TWX: 910-338-2213

Integrated Circuit Design Centre

Integrated Circuit Design Centre (Pty) Ltd
CEFIM Building, University of Pretoria
P.O. Box 11393, BROOKLYN 0011,
Republic of South Africa
27 12 420-2952 (International)
(012) 420-2952 (National)
TELEX: 321 648

Integrated Circuit Systems

Integrated Circuit Systems, Inc.
1012 West Ninth Avenue
King of Prussia, Pennsylvania 19406
215-265-8690
Specific product information:
Director of Sales .... Gary A. Teaman

Integrated Circuits Inc.

Integrated Circuits Inc.
10301 Willow Rd. N.E.
Redmond, Washington 98052
206-882-3100

Integrated Device Technology

Integrated Device Technology, Inc.
3236 Scott Boulevard
Santa Clara, California 95051
408-727-6116
TWX: 910-338-2070

Sales Office & Representatives

AL **Huntsville**
Hamilton/Avnet, 205-837-7210
AL **Huntsville**
Montgomery Marketing, 205-830-0498
AZ **Scottsdale**
Western High Tech. Mktg., 602-949-0873
AZ **Tempe**
Hamilton/Avnet, 602-231-5100
CA **Carlsbad**
Addem Assocs., 619-729-9216
CA **Chatsworth**
Diplomat Electronics, 213-700-8700
CA **Chatsworth**
Hamilton/Avnet, 818-700-6500
CA **Chatsworth**
Hamilton/Avnet, 818-700-2600
CA **Costa Mesa**
Diplomat Electronics, 714-549-8401
CA **Costa Mesa**
Hamilton/Avnet, 714-641-4100
CA **Costa Mesa**
Hamilton/Avnet, 714-754-6111
CA **Culver City**
Bestronics Inc., 213-870-9191
CA **Culver City**
Hamilton/Avnet
CA **Gardena**
Hamilton/Avnet, 213-327-3693
CA **Gardena**
Hamilton/Avnet, 213-217-6700
CA **Irvine**
Bestronics Inc., 714-261-7233

Integrated Device Technology (Cont)

CA	**Mountain View**	Technology Sales Inc., 415-960-0600
CA	**Ontario**	Hamilton/Avnet, 714-989-4602
CA	**Pleasanton**	Hamilton/Avnet
CA	**Sacramento**	Hamilton/Avnet, 916-925-2216
CA	**San Diego**	Diplomat Electronics, 619-292-5693
CA	**San Diego**	Hamilton/Avnet, 619-571-7510
CA	**San Diego**	Insight Electronics, 619-587-0471
CA	**Santa Clara**	IDT Sales Office—Bay Area, 408-727-6116
CA	**Sunnyvale**	Diplomat Electronics, 408-734-1900
CA	**Sunnyvale**	Hamilton/Avnet, 408-743-3355
CA	**Westminster**	IDT Sales Office—Western Area, 213-598-3076, 714-891-6651
CA	**Woodland Hills**	Bestronics Inc., 818-704-5616
CO	**Englewood**	Hamilton/Avnet, 303-740-1000
CO	**Wheat Ridge**	Waugaman Assoc., 303-423-1020
CT	**Danbury**	Hamilton/Avnet, 203-797-2800
CT	**Southbury**	Lindco Assoc., 203-264-7200
FL	**Altamonte Springs**	Lawrence Assoc., 305-339-3855
FL	**Boca Raton**	Lawrence Assocs., Inc., 305-368-7373
FL	**Clearwater**	Lawrence Assocs., Inc., 813-584-8110
FL	**Ft. Lauderdale**	Hamilton/Avnet, 305-971-2900
FL	**Melbourne**	I.D.T. Sales Offices, 305-242-1821
FL	**St. Petersburg**	Hamilton/Avnet, 813-576-3930
FL	**West Melbourne**	Lawrence Assocs., Inc., 305-724-8294
FL	**Winter Park**	Hamilton/Avnet, 305-628-3888
GA	**Norcross**	Hamilton/Avnet, 404-447-7507
GA	**Norcross**	Montgomery Marketing, 404-447-6124
IL	**Bensenville**	Diplomat Electronics, 312-595-1000
IL	**Chicago**	Hamilton/Avnet, 312-860-7700
IL	**Elmhurst**	Circuit Sales, Inc., 312-833-2242
IL	**Schaumberg**	IDT Sales Offices, 312-843-1262
IN	**Carmel**	Hamilton/Avnet, 317-844-9333
IN	**Ft. Wayne**	Arete Sales, 219-485-2375
IA	**Cedar Rapids**	Hamilton/Avnet, 319-362-4757
IA	**Cedar Rapids**	REP Assoc., 319-373-0152
KS	**Augusta**	Design Solutions, 316-775-7424
KS	**Overland Park**	Hamilton/Avnet, 913-888-8900
KS	**Shawnee**	Design Solutions, 913-631-4888
KY	**Lexington**	Hamilton/Avnet, 606-259-1475
MD	**Baltimore**	Microcomp, 301-247-0400
MD	**Columbia**	Hamilton/Avnet, 301-995-3500
MA	**North Andover**	IDT Sales Office—Eastern Area, 617-470-2633
MA	**Peabody**	Hamilton/Avnet, 617-532-3701
MA	**Woburn**	Hamilton/Avnet, 617-935-9700
MI	**Detroit**	Rathsburg Assocs., 313-882-1717
MI	**Grand Rapids**	Hamilton/Avnet, 616-243-8805
MI	**Livonia**	Hamilton/Avnet, 313-522-4700
MN	**Minneapolis**	Comprehensive Tech. Sales, 612-888-7011
MN	**Minnetonka**	Hamilton/Avnet, 612-932-0600
MO	**Earth City**	Hamilton/Avnet, 314-344-1200
MO	**St. Louis**	Design Solutions, 314-961-7170
NH	**Manchester**	Hamilton/Avnet, 603-624-9400
NJ	**Cherry Hill**	Diplomat Electronics, 609-751-0518
NJ	**Cherry Hill**	Hamilton/Avnet, 609-424-0100
NJ	**Fairfield**	Hamilton/Avnet, 201-575-3390
NM	**Albuquerque**	Hamilton/Avnet, 505-765-1500
NM	**Albuquerque**	Western High Tech Marketing, 505-884-2256
NY	**Buffalo**	Quality Components, 716-837-5430
NY	**Hauppauge**	Hamilton/Avnet, 516-231-9800
NY	**Jamaica**	SJ Associates, 718-291-3232
NY	**Manlius**	Quality Components, 315-682-8885
NY	**Rochester**	Hamilton/Avnet, 716-475-9130
NY	**Syracuse**	Hamilton/Avnet, 315-437-2641
NY	**Westbury**	Hamilton/Avnet, 516-997-6868
NC	**Cary**	Montgomery Marketing, 919-467-6319
NC	**Raleigh**	Hamilton/Avnet, 919-878-0819
OH	**Cleveland**	Hamilton/Avnet, 216-831-3500
OH	**Dayton**	Hamilton/Avnet, 513-439-6700
OH	**Rocky River**	Norm Case Assocs., 216-333-0400
OH	**Westerville**	Hamilton/Avnet, 614-882-7004
OK	**Tulsa**	ION Assocs., 918-664-0186
OR	**Lake Oswego**	Hamilton/Avnet, 503-635-8157
PA	**Pittsburg**	Hamilton/Avnet, 412-281-4150
TX	**Austin**	Hamilton/Avnet, 512-837-8911
TX	**Austin**	ION Assocs., 512-331-7251
TX	**Dallas**	IDT, 214-458-0466
TX	**Houston**	Hamilton/Avnet, 713-780-1771
TX	**Houston**	ION Assocs., 713-977-4354
TX	**Irving**	Hamilton/Avnet, 214-659-4111
UT	**Bountiful**	Anderson Assoc., 801-292-8991
UT	**Bountiful**	Diplomat Electronics, 801-486-4134
UT	**Salt Lake City**	Hamilton/Avnet, 801-972-2800
WA	**Bellevue**	Hamilton/Avnet, 206-643-3950
WA	**Redmond**	Quadra Sales Corp., 206-883-3550
WI	**New Berlin**	Hamilton/Avnet, 414-784-4510
Can	**Lachine, Quebec**	Bytewide Marketing Inc., 514-636-4121
Can	**Mississauga, Ontario**	Hamilton/Avnet, 416-677-7432
Can	**Nepean, Ontario**	Hamilton/Avnet, 613-226-1700
Can	**Ontario**	Bytewide Mktg., 416-675-1874
Can	**St. Laurent, Quebec**	Hamilton/Avnet, 514-335-1000
Intl	**Belgium, Liege**	MCA Tronix, TEL: 041-362780
Intl	**British Columbia, Burnaby**	Hamilton/Avnet, TEL: 604-437-6667
Intl	**Canada, Calgary, Alberta**	Hamilton/Avnet, TEL: 403-230-3586
Intl	**Denmark, Kokkedal**	C-88 A/S, TEL: 02-24-48-88
Intl	**England, East Sussex**	Dudley E. Rose, TEL: 0323-841373
Intl	**England, Oxford**	Chris Williams, TEL: 08446-8920
Intl	**England, Surrey**	IDT Sales Office, TEL: 44-1-393-8132
Intl	**England, Thame Oxon**	Micro Call, Ltd., TEL: 084-421
Intl	**Finland, Helsinki**	Turion OY, TEL: 90-372-144
Intl	**France, Lavallois Perret**	REA, TEL: 75-81-111
Intl	**Germany, Munchen**	Scantec GmbH, TEL: 89-8598021-24
Intl	**Israel, Herzila**	Vectronics, Ltd., TEL: 052-556070
Intl	**Italy, Milan**	Microelit SRL, TEL: 02-4690444/4695337
Intl	**Italy, Rome**	Microelit SRL, TEL: 06-890892/898243
Intl	**Japan, Tokyo**	Internix, TEL: 03-369-1101
Intl	**Netherlands, Eindhoven**	Auriema, TEL: 040-816565
Intl	**Norway, Oslo**	Eltron A/S, TEL: 02-50-06-50
Intl	**Scotland, Fife**	John Payne, TEL: 0592-264087
Intl	**South America, Adelaide**	Protronics Pty., Ltd., TEL: 61-8-212-3111
Intl	**Sweden, Spanga**	Svensk Teleindustri, TEL: 08-761-7300
Intl	**Switzerland, Zug**	Anatec, TEL: 042-31-54-77
Intl	**Taiwan, Taipei**	Johnson Trading Co., TEL: 02-741-7282
Intl	**West Germany**	Scantec GmbH, TEL: 89-8598021-24
Intl	**West Germany, Hanover**	Topas Electronic GmbH, TEL: 0511-345691

Distributors

CA	**Anaheim**	Zeus West, 714-632-6880
CO	**Wheat Ridge**	ACT, 303-422-9229
CT	**Danbury**	Diplomat Elctrns., 203-797-9674
FL	**Clearwater**	Diplomat Elctrns., 813-443-4514
FL	**Ft. Lauderdale**	Diplomat Elctrns., 305-974-8700

Integrated Device Technology (Cont)

GA	**Norcross** Diplomat Elctrns., 404-449-4133
MD	**Columbia** Diplomat Elctrns., 301-995-1226
MA	**Woburn** Diplomat Elctrns., 617-935-6611
MN	**Plymouth** ACT, 612-559-2500
NJ	**Totowa** Diplomat Elctrns., 201-785-1830
NY	**Liverpool** Diplomat Elctrns., 315-652-5000
NY	**Melville** Diplomat Elctrns., 516-454-6334
TX	**Austin** ACT, 512-452-5254
TX	**Dallas** ACT, 214-980-1888
TX	**Houston** ACT, 713-975-8447

iLSi

Integrated Logic Systems Inc.
4445 Northpark Drive
Colorado Springs, Colorado 80907
303-590-1588

Application engineering:
Factory 303-590-1588
Literature:
Field Sales Office
Price and delivery:
Field Sales Office
Place an order:
Field Sales Office
Follow-up an order:
Field Sales Office
Factory 303-590-1588
All other information:
Field Sales Office
Factory 303-590-1588

Sales Office & Representatives

CA	**Campbell** Kottmeier Assoc., 408-371-8700
CA	**Irvine** Venture Tech., 714-552-6203
CO	**Westminster** Straube Associates Mountain States, Inc., 303-426-0890
CT	**Orange** Eastern Sales Office, 301-783-9080
MN	**Edina** Allyn Associates, 612-935-7540
OH	**Beachwood** Electronic Salesmaster Inc. (ESI), 216-831-9555
OR	**Portland** Northwest Test & Measurement, 503-646-9966
OR	**Portland** Western Sales Office, 503-684-5448
TX	**Dallas** Central Sales Office, 214-437-0234
TX	**Richardson** Southern States Marketing, 214-238-7500

Integrated Measurement Systems

Integrated Measurement Systems
9525 S.W. Gemini Drive
Beaverton, Oregon 97005
503-626-7117

Integrated Microcircuits

Integrated Microcircuits
1515 Sixth Street
Hopkins, Minnesota 55343
612-933-4600

Integrated Power Semiconductors

Integrated Power Semiconductors, Ltd.
2727 Walsh Ave., Suite 201
Santa Clara, California 95051
408-727-2772
TELEX: 350073

Sales Office & Representatives

AL	**Huntsville** Conley & Associates, 305-365-3283;800-327-7610
CA	**Calabasas** QuadRep Central Inc., 818-887-3711
CA	**Irvine** QuadRep South Inc, 714-261-8141
CA	**San Diego** SR Electronics, 619-560-8330
CA	**San Jose** Custom Technology Sales, 408-252-9901
CT	**Wallingford** CompRep Associates, Inc., 203-269-1145
FL	**Boca Raton** Conley & Associates, 305-365-3283;800-523-3250
FL	**Oviedo** Conley & Associates, 305-365-3283
FL	**Tampa** Conley & Associates, 305-365-3283;800-523-3250
GA	**Atlanta** Conley & Associates, 305-365-3283;800-327-7610
IL	**Parkridge** Metcom Associates Corp., 312-696-1490
MA	**Westwood** CompRep Associates Inc., 617-329-3454
NH	**Amherst** CompRep Associates, 603-673-0454
NY	**East Syracuse** Nycom Inc., 315-437-8343
NY	**Melville** Comtronic Associates Inc., 516-249-1505
NC	**Charlotte** Conley & Associates, 305-365-3283
NC	**Raleigh** Conley & Associates, 305-365-3283
OK	**Tulsa** John B Guenther Inc., 918-660-5126
OR	**Tigard** Electronic Component Sales, 503-245-2342
PA	**Philadelphia** S-J Associates Inc., 215-464-4288
RI	**West Warwick** Integrated Power Semiconductors, 401-821-4260
TX	**Austin** John B Guenther Inc., 512-472-3825
TX	**Dallas** John B Guenther Inc., 214-691-8500
TX	**Houston** John B Guenther Inc., 713-974-0383
WI	**West Allis** Metcom Associates Corp., 414-476-1300
Intl	**Mexico,** John B. Guenther Inc., TEL: 214-691-8500
Intl	**Scotland, Livingston** Integrated Power Semiconductors, TEL: 0506-37375;44 506 37375
Intl	**West Germany, Lohhof Munchen** Integrated Power Semiconductors, TEL: 0-89-3-10-40-47, 49 89 3104047
PR	**Mayaguez** Comp Rep Associates, 809-832-9529

Distributors

AZ	**Tempe** Insight Electronics, 602-829-1800
CA	**Irvine** Intercept Electronics, 714-261-9362
CA	**San Carlos** Logan Electronics, 415-594-0700
CA	**San Diego** Insight Electronics, 619-587-0471
CT	**Bethel** Heilind Electronics Inc., 203-797-8600
FL	**Ft. Lauderdale** Dielco, 305-973-8700
MA	**Hopkinton** Interface Electronics, 617-435-6858
NY	**Patterson** Intercept Electronics Corp., 914-878-3355
PA	**Philadelphia** Shap Electronics, 215-969-3300
TX	**Arlington** Bell Component Sales, 817-461-5303
TX	**Dallas** Heilind Electronics, 214-351-2050
Intl	**Belgium, Liege** MCA-TRONIX, TEL: 32 41 36 27 80
Intl	**Finland, Helsinki** Yleiselektroniikka OY, TEL: 358 0 09 562 11 22
Intl	**France, Le Chesnay** A2M, TEL: 33 3 954 91 13
Intl	**Germany, Munchen** ASTRONIC GmbH, TEL: 49 89 30 90 31
Intl	**Sweden, Taby** Elektronik AB, TEL: 46 8 768 05 60
Intl	**Switzerland, Zurich** Fabrimex AG, TEL: 41 1 251 29 29
Intl	**United Kingdom, Ilford, Essex** Electronic Systems Ltd., TEL: 44 1 554 62 22

Integrated Solutions

Integrated Solutions, Inc.
2240 Lundy Avenue
San Jose, California 95131
408-943-1902
TELEX: 499-6929

Integrated Technology

Integrated Technology Corporation
12288 N. Stadem Dr.
Tempe,, Arizona 85281
602-968-3459

Intel

Intel Corporation
3065 Bowers Avenue
Santa Clara, California 95051
408-987-8080
TELEX: 34-6372
TWX: 910-338-0026

Sales Office & Representatives

AL	**Huntsville**	Intel Corp., 205-830-4010
AZ	**Phoenix**	Intel Corp., 602-869-4980
AZ	**Tucson**	Intel Corp., 602-299-6815
CA	**Canoga Park**	Intel Corp., 818-704-8500
CA	**El Segundo**	Intel Corp., 213-640-6040
CA	**Mountain View**	Intel, 415-968-8086
CA	**Sacramento**	Intel Corp., 916-920-8096
CA	**San Diego**	Intel Corp., 619-452-5880
CA	**Santa Ana**	Intel Corp., 714-835-9642
CO	**Boulder**	Intel Corp., 303-442-8088
CO	**Colorado Springs**	Intel Corp., 303-594-6622
CO	**Denver**	Intel Corp., 303-321-8086
CT	**Danbury**	Intel Corp., 203-748-3130
CT	**Stamford**	EMC, 203-327-2934
FL	**Altamonte Springs**	Intel Corp., 305-869-5588
FL	**Ft. Lauderdale**	Intel Corp., 305-771-0600
FL	**St. Petersburg**	Intel Corp., 813-577-4123
GA	**Norcross**	Intel Corp., 404-449-0541
IL	**Schaumburg**	Intel Corp., 312-310-8031
IN	**Indianapolis**	Intel Corp., 317-875-0623
IA	**Cedar Rapids**	Intel Corp., 319-393-5510
KS	**Overland Park**	Intel Corp., 913-345-2727
LA	**Metaire**	Industrial Digital Systems, 504-899-1654
MD	**Greenbelt**	Intel Corp., 301-441-1020
MD	**Hanover**	Intel Corp., 301-796-7500
MA	**Westford**	Intel Corp., 617-629-3222
MI	**West Broomfield**	Intel Corp., 313-851-8096
MN	**Bloomington**	Intel Corp., 612-835-6722
MO	**Earth City**	Intel Corp., 314-291-1990
NJ	**Edison**	Intel Corp., 201-225-3000
NM	**Albuquerque**	BFA Corp., 505-292-8086
NY	**Hauppauge**	Intel Corp., 516-231-3300
NY	**Rochester**	Intel Corp., 716-424-1050
NY	**Syracuse**	T-Squared, 315-463-8592
NY	**Victor**	T-Squared, 716-924-9101
NY	**Wappinger Falls**	Intel Corp., 914-297-6161
NC	**Charlotte**	Intel Corp., 704-568-8966
NC	**Raleigh**	Intel Corp., 919-781-8022
OH	**Cleveland**	Intel Corp., 216-464-2736
OH	**Dayton**	Intel Corp., 513-890-5350
OK	**Tulsa**	Intel Corp., 918-749-8688
OR	**Beaverton**	Intel Corp., 503-641-8086
PA	**Camphill**	Intel Corp., 717-737-5035
PA	**Fort Washington**	Intel Corp., 215-641-1000
PA	**Pittsburgh**	Intel Corp., 412-823-4970
PA	**Willow Grove**	Q.E.D. Elctrns., 215-657-5600
TX	**Austin**	Intel Corp., 512-454-3628
TX	**Dallas**	Intel Corp., 214-241-8087
TX	**Houston**	Indl. Digital Sys. Corp., 713-988-9421
TX	**Houston**	Intel Corp., 713-988-8086
UT	**Murray**	Intel Corp., 801-263-8051
VA	**Richmond**	Intel Corp., 804-282-5668
WA	**Bellevue**	Intel Corp., 206-453-8086
WA	**Spokane**	Intel Corp., 509-928-8086
WI	**Brookfield**	Intel Corp., 414-784-8087
Can	**Ottawa, Ontario**	Intel Corp., 613-829-9714
Can	**Pt. Claire, Quebec**	Intel, 514-694-9130
Can	**Rexdale, Ontario**	Intel Corp., 416-675-2105
Can	**Vancouver, British Columbia**	Intel Semiconductor of Canada, 604-738-6522
Intl	**Australia, Crows Nest, NSW**	Intel Semiconductor Pty. Ltd., TEL: 011-61-2-975-2744
Intl	**Belgium, Brussels**	Intel Corp. S.A., TEL: (02) 661 07 11
Intl	**Chile, Santiago**	DIN, TEL: 011-55-11-227 564
Intl	**China, Beijing**	Intel PRC
Intl	**Denmark, Copenhagen East**	Intel Denmark A/S, TEL: (01) 19 80 33
Intl	**Denmark, Gloskrup**	MultiKomponent A/S, TEL: (02) 45 66 45
Intl	**England, Berks**	Rapid Recall, Ltd., TEL: (494) 26 271
Intl	**Finland, Helsingfors**	Intel Finland OY, TEL: (90) 544 644
Intl	**Finland, Helsinki**	Oy Fintronic AB, TEL: (0) 692 60 22
Intl	**France, Asnieres**	Metrologie, TEL: (1) 790 62 40
Intl	**France, Choisy-Le-Roi**	Jermyn S.A., TEL: (1) 853 12 00
Intl	**France, Lyon**	Intel Corp., TEL: (7) 842-40-89
Intl	**France, Lyon**	Intel Corp., S.A.R.L., TEL: (7) 842 40 89
Intl	**France, Sevres**	Tekelec Airtonic, TEL: (01) 534 75 35
Intl	**Germany, Camberg**	Jermyn GmbH, TEL: (06434) 231
Intl	**Germany, Hannover**	Intel Semiconductor GmbH, TEL: (511) 34-40-81
Intl	**Germany, Muenchen**	Intel Semiconductor GmbH, TEL: (89) 53891
Intl	**Germany, Munich**	Electronic 2000 Vertriebs GmbH, TEL: (89) 42 00 10
Intl	**Germany, Stuttgart**	Intel Semiconductor GmbH, TEL: (711) 58 00 82
Intl	**Germany, Wiesbaden**	Intel Semiconductor GmbH, TEL: (6121) 70 08 74
Intl	**Hong Kong**	Schmidt & Co. Ltd., TEL: 011-852-5-822-0222
Intl	**Hong Kong, Hong Kong**	Intel Semiconductor Corp., TEL: 011-852-5-215-311
Intl	**Hong Kong, WanChai**	Schmidt & Co. Ltd., TEL: 011-852-5-822-0222
Intl	**India, Bombay**	Micronic Devices, TEL: 011-91-22-48-61-70
Intl	**Israel, Tel Aviv**	Eastronics Ltd., TEL: (3) 47 51 51
Intl	**Israel, TelAviv**	Intel Semiconductor Ltd., TEL: 3-491099
Intl	**Italy, Assago (Milano)**	Intel Corp. Italia Spa, TEL: (02) 824 00 06
Intl	**Italy, Milano**	Electra 3S S.P.A., TEL: (2) 34 97 51
Intl	**Japan, Ibaraki-Ken**	Intel Japan K.K., TEL: 029747-8511
Intl	**Japan, Kanagawa**	Intel Japan K.K.½*, TEL: 044-733-7011
Intl	**Japan, Kanagawa**	Intel Japan KK, TEL: 0462-23-3511
Intl	**Japan, Kitakyushu City**	Asahi Elctrns. Co. Ltd., TEL: (093) 511-6471
Intl	**Japan, Osaka**	Intel Japan KK, TEL: 06-863 1091
Intl	**Japan, Saitama**	Intel Japan KK, TEL: 048524 6871
Intl	**Japan, Shizuoka-Ken**	Intel Japan K.K.½*, TEL: 0559-72-4121
Intl	**Japan, Tokyo**	Intel Japan KK, TEL: 0423-60-7871
Intl	**Japan, Tokyo**	Intel Japan KK, TEL: 03-201-3621
Intl	**Japan, Tokyo**	Intel Japan KK, TEL: 03-426-2231
Intl	**Japan, Tokyo**	Ryoyo Elec. Corp., TEL: (03) 555-4811
Intl	**Japan, Tokyo**	Tokyo Electron Ltd., TEL: (03) 343-4411
Intl	**Korea, Seoul**	Intel Semiconductor Asia, TEL: 011-82-2-784-8186, 011-82-2-784-8286
Intl	**Netherlands, Gravenhage**	Koning & Hartman, TEL: 31 (70) 210.101
Intl	**Netherlands, Rotterdam**	Intel Semiconductor Nederland B.V., TEL: (10) 21 23 77
Intl	**Norway, Hvalstad**	Nordisk Elektronic (Norge) A/S, TEL: (2) 846 210
Intl	**Norway, Skjetten**	Intel Norway A/S, TEL: (2) 742 420
Intl	**Portugal, Lisbon**	Ditram, TEL: (19) 545 313
Intl	**Santa Fe Springs, CA**	Koram Digital USA, TEL: 714-739-2204
Intl	**Singapore**	Intel Semiconductor, TEL: 011-65-250-7811
Intl	**Singapore, Singapore**	General Engrs. Corp. Pty. Ltd., TEL: 011-065-271-3163
Intl	**South Africa, Pretoria**	Elctrn. Bldg. Elements, Pty. Ltd., TEL: 011-27-12-46-9221
Intl	**Spain, Barcelona**	Interface S.A., TEL: (3) 219 80 11

Intel (Cont)

Intl	**Spain, Madrid**	ITT SESA, TEL: (34) 14 195400
Intl	**Sweden, Solna**	Intel Sweden A.B., TEL: (08) 734 01 00
Intl	**Sweden, Solna**	Nordisk Electronik AB, TEL: (08) 734 97 70
Intl	**Sweden, Stockholm**	AB Gosta Backstrom, TEL: (8) 541 080
Intl	**Switzerland, Zurich**	Industrade AG, TEL: (01) 830 50 40
Intl	**Switzerland, Zurich**	Intel Semiconductor A.G., TEL: (01) 829 29 77
Intl	**United Kingdom, Berkshire**	Bytech Ltd., TEL: (0734) 61031
Intl	**United Kingdom, Berkshire**	Comway Microsystems Ltd., TEL: 44 (344) 55333
Intl	**United Kingdom, Kent**	Jermyn Inds. (Mogul), TEL: (0732) 450144
Intl	**United Kingdom, Middlesex**	M.E.D.L., TEL: (190) 49307
Intl	**United Kingdom, Wiltshire**	Intel Corp. (U.K.) Ltd., TEL: (0793) 488 388
PR	**Las Piedras**	Intel Microprocessor, 809-733-3030

Distributors

AL	**Huntsville**	Arrow Elctrns., 205-837-6955
AL	**Huntsville**	Hamilton/Avnet Elctrns., 205-837-7210
AL	**Huntsville**	Pioneer/Huntsville, 205-837-9300
AZ	**Phoenix**	Kierulff Electronics, 602-437-0750
AZ	**Phoenix**	Wyle, 602-866-2888
AZ	**Tempe**	Hamilton Avnet Elctrns., 602-231-5100
CA	**Calabasa**	Wyle Distribution, 818-880-9000
CA	**Chatsworth**	Arrow Elctrns., Inc., 818-701-7500
CA	**Chatsworth**	Hamilton Electro, 818-700-6500
CA	**Chatsworth**	Hamilton/Avnet, 818-700-6271
CA	**Commerce**	Kierulf Elctrn., 213-725-0325
CA	**Costa Mesa**	Avnet Elctrns., 714-754-6051
CA	**Costa Mesa**	Hamilton Electro Sales, 714-641-4150
CA	**Culver City**	Hamilton/Avnet Elctrns., 213-558-2458
CA	**Cypress**	Kierulff Electronics, 714-220-6300
CA	**El Segundo**	Wyle Distribution Grp., 213-322-8100
CA	**Garden Grove**	Wyle Systems, 714-851-9953
CA	**Irvine**	Wyle Distribution Grp., 714-843-9953
CA	**Irvine**	Wyle Military, 714-851-9958
CA	**Ontario**	Hamilton/Avnet, 714-989-9411
CA	**Rancho Cordova**	Wyle Distribution, 916-638-5282
CA	**Sacramento**	Hamilton/Avnet Elctrns., 916-920-3150
CA	**San Diego**	Hamilton/Avnet Elctrns., 619-571-7500
CA	**San Diego**	Wyle Distribution Grp., 619-565-9171
CA	**San Jose**	Kierulff Electronics, 408-947-3471
CA	**Santa Clara**	Wyle Distribution Grp., 408-727-2500
CA	**Santa Fe Springs**	Koram Digital, 714-739-2204
CA	**Sunnyvale**	Arrow Elctrns., Inc., 408-745-6600
CA	**Sunnyvale**	Hamilton/Avnet Elctrns., 408-743-3300
CA	**Torrance**	Hamilton Avnet, 213-615-3909
CA	**Tustin**	Arrow Electronics, 714-838-5422
CA	**Tustin**	Kierulf Elctrn., 714-731-5711
CO	**Englewood**	Hamilton/Avnet, 303-740-1017
CO	**Thornton**	Wyle Distribution Grp., 303-457-9953
CT	**Danbury**	Hamilton/Avnet Elctrns., 203-797-2800
CT	**Norwalk**	Pioneer Northeast, 203-853-1515
CT	**Wallingford**	Arrow Elctrns., 203-265-7741
FL	**Altamonte Springs**	Pioneer/Orlando, 305-834-9090
FL	**Deerfield Beach**	Arrow Electronics, 305-429-8200
FL	**Deerfield Beach**	Pioneer/Ft. Lauderdale, 305-428-8877
FL	**Ft. Lauderdale**	Arrow Elctrns., 305-776-7790
FL	**Ft. Lauderdale**	Hamilton/Avnet Elctrns., 305-971-2900
FL	**Palm Bay**	Arrow Elctrns., 305-725-1480
FL	**St. Petersburg**	Hamilton/Avnet Elctrns., 813-576-3930
FL	**Winterpark**	Hamilton/Avnet, 305-628-3888
GA	**Norcross**	Arrow Elctrns., 404-449-8252
GA	**Norcross**	Hamilton/Avnet Elctrns., 404-447-7500
GA	**Norcross**	Pioneer/Georgia, 404-448-1711
IL	**Bensenville**	Hamilton/Avnet Elctrns., 312-860-7780
IL	**Elk Grove Village**	Pioneer/Chicago, 312-437-9680
IL	**Schaumburg**	Arrow Elctrns., 312-397-3440
IN	**Carmel**	Hamilton/Avnet Elctrns., 317-844-9333
IN	**Indianapolis**	Arrow Elctrns., 317-243-9353
IN	**Indianapolis**	Pioneer/Indiana, 317-849-7300
KS	**Overland Park**	Hamilton/Avnet Elctrns., 913-888-8900
MD	**Columbia**	Hamilton/Avnet, 301-995-3500
MD	**Columbia**	Hamilton/Avnet Elctrns., 301-995-0003
MD	**Gaithersburg**	Mesa Technology, 301-948-4350
MD	**Gaithersburg**	Pioneer, 301-948-0710
MA	**Lexington**	Pioneer Northeast, 617-863-1200
MA	**Woburn**	Arrow Elctrns., 617-933-8130
MA	**Woburn**	Hamilton/Avnet Elctrns., 617-935-9700
MI	**Ann Arbor**	Arrow Elctrns., 313-971-8220
MI	**Grand Rapids**	Hamilton/Avnet Elctrns., 616-243-8805
MI	**Livonia**	Hamilton/Avnet Elctrns., 313-522-4700
MI	**Livonia**	Pioneer/Michigan, 313-525-1800
MN	**Edina**	Arrow Elctrns., 612-830-1800
MN	**Minnetonka**	Hamilton/Avnet Elctrns., 612-932-0600
MN	**Minnetonka**	Pioneer/Twin Cities, 612-935-5444
MO	**Earth City**	Hamilton/Avnet Elctrns., 314-344-1200
MO	**St. Louis**	Arrow Elctrns., 314-567-6888
NH	**Manchester**	Arrow Elctrns., 603-668-6968
NH	**Manchester**	Hamilton/Avnet, 603-624-9400
NJ	**Cherry Hill**	Hamilton/Avnet Elctrns., 609-424-0110
NJ	**Fairfield**	Arrow, 201-575-5300
NJ	**Fairfield**	Hamilton, 201-575-3390
NJ	**Fairfield**	MTI, 201-227-5552
NJ	**Marlton**	Arrow Elctrns., 609-596-8000
NJ	**Pinebrook**	Pioneer, 201-575-3510
NM	**Albuquerque**	Alliance Elctrns. Inc., 505-292-3360
NM	**Albuquerque**	Hamilton/Avnet Elctrns., 505-765-1500
NY	**Binghamton**	Harvey Elctrns., 607-748-8211
NY	**Fairport**	Pioneer, 716-381-7070
NY	**Hauppauge**	Arrow Elctrns., 516-231-1000
NY	**Hauppauge**	Hamilton/Avnet, 516-231-9800
NY	**Liverpool**	Arrow Elctrns., 315-652-1000
NY	**Melville**	Arrow Elctrns., 516-694-6800
NY	**New York**	Agent, 202-406-3052
NY	**Port Washington**	MTI, 516-621-6200
NY	**Rochester**	Arrow Elctrns., 716-427-0300
NY	**Rochester**	Hamilton/Avnet Elctrns., 716-475-9130
NY	**Syracuse**	Hamilton/Avnet Elctrns., 315-437-2641
NY	**Vestal**	Pioneer, 607-748-8211
NY	**Woodbury**	Pioneer, 516-921-8700
NC	**Charlotte**	Pioneer, 704-524-8188
NC	**Raleigh**	Arrow Elctrns., 919-876-3132
NC	**Raleigh**	Hamilton/Avnet Elctrns., 919-878-0819
OH	**Centerville**	Arrow Elctrns., 513-435-5563
OH	**Cleveland**	Pioneer/Cleveland, 216-587-3600
OH	**Dayton**	Hamilton/Avnet Elctrns., 513-433-0610
OH	**Dayton**	Pioneer/Dayton, 513-236-9900
OH	**Solon**	Arrow Elctrns., 216-248-3990
OH	**Warrensville Heights**	Hamilton/Avnet Elctrns., 216-831-3500
OK	**Tulsa**	Arrow Elctrns., 918-665-7700
OR	**Beaverton**	Almac/Stroum Elctrns., 503-629-8090
OR	**Hillsboro**	Wyle Distribution Group, 503-640-6000
OR	**Lake Oswego**	Hamilton/Avnet Elctrns., 503-635-7848

Intel (Cont)

PA **Horsham**
Pioneer/Delaware Valley, 215-674-4000

PA **Monroeville**
Arrow Elctrns., 412-856-7000

PA **Pittsburgh**
Pioneer/Pittsburgh, 412-782-2300

TX **Austin**
Arrow Elctrns., 512-835-4180

TX **Austin**
Hamilton/Avnet Elctrns., 512-837-8911

TX **Austin**
Pioneer/Austin, 512-835-4000

TX **Carrollton**
Arrow Elctrns., 214-380-6464

TX **Dallas**
Pioneer/Dallas, 214-386-7300

TX **Houston**
Arrow Elctrns., 713-530-4700

TX **Houston**
Hamilton/Avnet Elctrns., 713-780-1771

TX **Houston**
Pioneer/Houston, 713-988-5555

TX **Irving**
Hamilton/Avnet Elctrns., 214-659-4100

UT **Salt Lake City**
Hamilton/Avnet Elctrns., 801-972-2800

UT **Salt Lake City**
Wyle Dist., 801-974-9953

WA **Bellevue**
Almac/Stroum Elctrns., 206-643-9992

WA **Bellevue**
Arrow Elctrns., 206-643-4800

WA **Bellevue**
Hamilton/Avnet Elctrns., 206-453-5874

WI **New Berlin**
Hamilton/Avnet Elctrns., 414-784-4510

WI **Oak Creek**
Arrow Elctrns., 414-764-6600

Can **Brampton, Ontario**
Zentronics, 416-451-9600

Can **Burnalay, BC**
Hamilton/Avnet, 604-272-4242

Can **Calgary, Alberta**
Hamilton/Avnet, 403-230-3586

Can **Calgary, Alberta**
Zentronics, 403-272-1021

Can **Downsview, ON**
Arrow Electronics, 416-661-0220

Can **Mississauga, Ontario**
Hamilton/Avnet, 416-677-7432

Can **Montreal, PQ**
Arrow Electronics, 514-735-5511

Can **Neapean, ON**
Arrow Electronics, 613-226-6903

Can **Nepean, ON**
Zentronics, 613-225-8840

Can **Nepean, Ontario**
Hamilton/Avnet, 613-226-1700

Can **Quebec, PQ**
Arrow Electronics, 418-687-4231

Can **Richmond, British Columbia**
Zentronics, 604-273-5575

Can **St. Laurent, Quebec**
Hamilton/Avnet, 514-335-1000

Can **St. Laurent, Quebec**
Zentronics, 514-735-5361

Can **Waterloo, Ontario**
Zentronics, 519-884-5700

Can **Winnipeg, Manitoba**
Zentronics, 204-775-8661

Intl **Argentina, Buenos Aires**
VLC S.R.L., TEL: 011-54-1-492092

Intl **Australia, Artamon**
Total Electronics, TEL: 011-61-02-438-1855

Intl **Australia, Artamon**
Total Electronics, TEL: 011-61-02-438-1855

Intl **Australia, Victoria**
Total Electronics, TEL: 011-61-3-288-4044

Intl **Austria, Wien**
Bacher Elektronische Geraete GmbH, TEL: (222) 83 56 46

Intl **Austria, Wien**
W. Moor GmbH, TEL: 222-85-86-46

Intl **Belgium, Brussels**
Inelco Belgium S.A., TEL: (021) 216 01 60

Intl **Brazil, Sao Paulo**
Elebra Microelectronics S/A, TEL: 011-55-11-274-9945

Intl **Chile, Santiago**
Din, TEL: 011-56-2-227 564

Intl **Denmark, Gloskrup**
ITT MultiKomponent A/S, TEL: (02) 45 66 45

Intl **England, Berks**
Rapid Recall, Ltd., TEL: (494) 26 271

Intl **Finland, Helsinki**
Oy Fintronic AB, TEL: 0 692 60 22

Intl **France, Asnieres**
Metrologie, TEL: (1) 790 62 40

Intl **France, Choisy-Le-Roi**
Jermyn S.A., TEL: (1) 853 12 00

Intl **France, Les Ulis Cedex**
Generim, TEL: (6) 907 78 78

Intl **France, Sevres**
Tekelec Airtronic, TEL: (1) 534 75 35

Intl **Germany, Camberg**
Jermyn GmbH, TEL: (06434) 231

Intl **Germany, Dreieich**
Proelectron Vertriebs GmbH, TEL: (6103) 33564

Intl **Germany, Munich**
Electronic 2000 Vertriebs GmbH, TEL: (89) 42 00 10

Intl **Hong Kong**
Novel Precision Machinery, TEL: 011-852-5-223222

Intl **Hong Kong**
Schmidt & Co. Ltd., TEL: 011-852-5-822-0222

Intl **India, Bangalore**
Micronic Devices, TEL: 011-91-812-600-631

Intl **India, Bombay**
Micronic Devices, TEL: 011-91-22-48-61-70

Intl **India, New Delhi**
Micronic Devices, TEL: 110 060

Intl **Ireland, Dublin**
Micro Marketing, TEL: (1) 85 62 88

Intl **Israel, Tel Aviv**
Eastronics Ltd., TEL: (3) 47 51 51

Intl **Italy, Milano**
Electra 3S S.P.A., TEL: (2) 34 97 51

Intl **Italy, Milano**
Intesi, TEL: (2) 82470

Intl **Italy, Milano**
Intesi, TEL: (2) 82470

Intl **Japan, Kitakyushu City**
Asahi Elctrns. Co. Ltd, TEL: (093) 511-6471

Intl **Japan, Tokyo**
C. Itoh Micronics, TEL: (03) 256-2211

Intl **Japan, Tokyo**
Ryoyo Elec. Corp., TEL: (03) 555-4811

Intl **Japan, Tokyo**
Tokyo Electron Ltd., TEL: (03) 343-4411

Intl **Korea, Seoul**
J-TEK Corp., TEL: 011-82-2-782-8039

Intl **Korea, Seoul**
Samsung, TEL: 777-78

Intl **Mexico**
DICOPEL S.A., TEL: 90115255613211

Intl **Netherlands, Gravenhage**
Koning & Hartman, TEL: 31 (70) 210.101

Intl **New Zealand, Auckland**
Northrup Instruments & Systems, TEL: 011-64-9-501-219

Intl **New Zealand, Wellington**
Northrup Instruments & Systems

Intl **Norway, Hvalstad**
Nordisk Elektronic (Norge) A/S, TEL: (2) 846 210

Intl **Pakistan, Karachi-46**
Computer Applications LTD., TEL: 011-92-21-530-306

Intl **Portugal, Lisbon**
Ditram, TEL: (19) 545 313

Intl **San Jose, CA**
H.R. Microelectronics, TEL: 408-978-8000

Intl **San Jose, CA**
H.R. Microelectronics Enterprises, TEL: 408-978-8000

Intl **Santa Clara, CA**
Mectel Int'l., TEL: 408-988-4513

Intl **Santa Clara, CA**
Tristar Semiconductor, TEL: 408-980-1630

Intl **Singapore, Singapore**
General Engrs. Corp. Pty. Ltd., TEL: 011-65-271-3163

Intl **South Africa, Pretoria**
Elctrn. Bldg. Elements, Pty. Ltd., TEL: 011-27-12-46-9221

Intl **Spain, Barcelona**
Interface S.A., TEL: (3) 219 8011

Intl **Spain, Madrid**
Diode Espana, TEL: 455 36 86

Intl **Spain, Madrid**
ITT SESA, TEL: (34) 14 1954 00

Intl **Sunnyvale, CA**
Ramiak Int'l, TEL: 408-733-8767

Intl **Sweden, Solna**
Nordisk Electronik AB, TEL: (08) 734 9770

Intl **Sweden, Stockholm**
AB Gosta Backstrom, TEL: (8) 541 080

Intl **Switzerland, Zurich**
Industrade AG, TEL: (01) 830 50 40

Intl **Taiwan, Taipei**
Mitac Corp., TEL: 011-96-2-501-8231

Intl **United Kingdom, Berkshire**
Bytech Ltd., TEL: (0734) 61031

Intl **United Kingdom, Berkshire**
Comway Microsystems Ltd., TEL: 44 (344) 55333

Intl **United Kingdom, Kent**
Jermyn Inds. (Mogul), TEL: (0732) 450144

Intl **United Kingdom, Middlesex**
M.E.D.L., TEL: (190) 49307

Intl **Washington, DC**
Horizon Training, TEL: 202-887-1900

Intl **West Germany, Henstedt-Ulzburg**
CES Computer Electronics Systems, TEL: (04193) 4026

Intl **West Germany, Munich**
Metrologne GmbH, TEL: (89) 57 30 84

Intelicom Systems Ltd.

Intelicom Systems Ltd.
No. 5 - 260 East Esplanad Ave.
N. Vancouver, B.C., Canada V7L 1A3
604-986-3351

Sales Office & Representatives

Intl **Australia, Prospect**
A. J. Distributors Pty Ltd.

Intl **England, Slough, Berkshire**
Data Translation Ltd.

Intl **France, Buc**
Yrel

Intelligent Computer Integration

Intelligent Computer Integration, Inc.
570 W. Lambert Road, Suite C
Brea, California 02621
714-990-1707

Intergraph

Intergraph
1 Madison Industrial Park
Huntsville, Alabama 35807
205-772-2000

International Cybernetics

International Cybernetics Corporation
2270 Westbury Ave.
Clearwater, Florida 33546
813-535-6946

International Microcircuits

International Microcircuits, Inc.
3350 Scott Boulevard Bldg. 37
Santa Clara, California 95051
408-727-2280
TWX: 910-338-2032

International Microelectronic Products

International Microelectronic Products
2830 North First Street
San Jose, California 95134
408-262-9100
TWX: 910-338-2274

Specific product information:
Mike Hollabaugh
Application engineering:
Mike Hollabaugh
Literature:
Russell Fujioka
Price and delivery:
Karen Hubbell
Place an order:
Karen Hubbell
Follow-up an order:
Karen Hubbell
All other information:
Russell Fujioka

Sales Office & Representatives

Intl	**Korea, Seoul** Duksung Trading Co., TEL: 854-5047, 854-5831

Intersil

Intersil, Inc.
10600 Ridgeview Court
Cupertino, California 95014
408-996-5000
TWX: 910-338-0533

Specific product information:

Memory	408-996-5000
Analog	
Analog Switches/Multiplexers	408-996-5000
Linear	408-996-5000
Timers, Counters	408-996-5000
Watch, Clock	408-996-5000
Data Acquisition Products	408-996-5000
Discretes:	
FETs Bipolar	408-996-5000
FETs, Power	408-996-5000

Application engineering:
408-996-5615

Literature:

Marketing Service Department	315-457-9333

Price and delivery:

Customer Service Department	408-996-5343

Place an order:

Customer Service Department	408-996-5343

Follow-up an order:

Customer Service Department	408-996-5343

All other information:

Marketing Services Department	408-996-5403

Sales Office & Representatives

AL	**Huntsville** CSR Elctrns., 205-533-2444
AL	**Huntsville** GE Semiconductor, 205-883-5713
AZ	**Phoenix** GE Semiconductor, 602-241-7224
AZ	**Phoenix** Shefler-Khan, 602-257-9015
CA	**Canoga Park** H-Technical Sales, Inc., 818-999-1222
CA	**Canoga Pk.** GE Semiconductor, 818-884-4911
CA	**Carlsbad** ADDEM S.D., 619-729-9216
CA	**Garden Grove** H-Technical Sales, Inc., 714-740-0161
CA	**Newport Beach** GE Semiconductor, 714-852-9030
CA	**San Jose** GE Semiconductor, 408-255-5800
CA	**Santa Clara** Quorum Tech. Sales, 408-980-0812
CO	**Englewood** Thorson Rocky Mountain, 303-779-0666
CT	**Farmington** GE Semiconductor, 203-677-7876
CT	**Meriden** Advanced Components Sales, 203-238-6891
FL	**Deerfirld Beach** GE Semiconductor, 305-429-0440
FL	**Maitland** EIR, Inc., 305-660-9600
GA	**Atlanta** CSR Elctrns., 404-396-3720
GA	**Atlanta** GE Semiconductor, 404-458-8401
IL	**Des Plaines** GE Semiconductor, 312-827-9100
IL	**Northbrook** E. Dolin Sales, Co., 312-498-6770
IN	**Carmel** Giesting & Assoc., 317-844-5222
IN	**Ft. Wayne** GE Semiconductor, 219-422-8551
IN	**Ft. Wayne** Giesting & Assoc., 219-486-1912
IN	**Indianapolis** GE Semiconductor, 317-298-5317
IA	**Cedar Rapids** J.R. Sales Eng., 319-393-2232
KS	**Overland Pk.** Kebco Inc., 913-541-8431
KS	**Wichita** Kebco Inc., 316-733-1301
MD	**Columbia** Robert Elctrns., 301-995-1900
MA	**Burlington** Advanced Tech. Sales, 617-272-0100
MA	**Lexington** Sales Office, 617-861-6220
MI	**Coloma** Giesting & Assocs., 616-468-4200
MI	**Farmington Hills** Giesting & Assocs., 313-478-8106
MN	**Minneapolis** GE Semiconductor, 612-835-2550
MN	**Minneapolis** PSI, 612-944-8545
MO	**St. Louis** Kebco Inc., 314-576-4111
NJ	**Mt. Laurel** Comtek, Inc., 609-235-8505
NJ	**Rahway** GE Semiconductor, 201-381-4210
NM	**Albuquerque** Shefler-Kahn, 505-345-3591
NY	**Albany** GE Semiconductor, 518-454-2576
NY	**Dewitt** GE Semiconductor, 315-445-4780
NY	**East Syracuse** Ossman Comp. Sales Corp., 315-437-7052
NY	**Jamaica** S-J Assoc., 718-291-3232
NY	**Rochester** Ossman Comp. Sales Corp., 716-424-4460
NY	**Vestal** Ossman Comp. Sales, 607-754-3264
NC	**Greensboro** GE Semiconductor, 919-379-8474
NC	**Raleigh** CSR Elctrns., 919-878-9200
OH	**Cincinnati** Giesting & Assocs., 513-385-1105
OH	**Cleveland** GE Semiconductor, 216-266-2900
OH	**Cleveland** Giesting & Assocs., 216-261-9705
OH	**Dayton** Giesting & Assocs., 513-433-5832
OK	**Tulsa** Bonser-Philhower Sales, 918-744-9964
OR	**Beaverton** LD Elctrns., 503-649-8556
PA	**Pittsburgh** Giesting & Assocs., 412-963-0727
TX	**Austin** Bonser-Philhower Sales, 512-346-9186
TX	**Dallas** GE Semiconductor, 214-661-8582
TX	**Houston** Bonser-Philhower Sales, 713-531-4144
TX	**Richardson** Bonser-Philhower Sales, 214-234-8438
UT	**Salt Lake City** Thorson Rocky Mountain, Inc., 801-973-7969
VA	**Charlottsville** Sales Office, 804-978-5040
VA	**Richmond** Robert Elctrns., 804-276-3979
WA	**Snohomish** LD Elctrns., 206-568-0511
WA	**Spokane** LD Elctrns., 509-922-4883
WI	**Milwaukee** Dolin Sales, Co., 414-482-1111
Can	**Nepean, Ontario** Gidden-Morton, 613-726-0844
Can	**St. Laurent, Quebec** Gidden-Morton, 514-335-9572
Can	**St. Laurent, Quebec** Gidden-Morton Assoc., Inc., 514-335-9572
Can	**Vancouver, BC** Access Electronics
Can	**Vancouver, British Columbia** Access Electronics
Intl	**Belgium** General Electric International Operations, TEL: (2) 673 81 59/660 20 16
Intl	**Belgium, Benelux** General Electric International Operations, Co. Inc., TEL: (2) 673 81 59/660 20 16
Intl	**Belgium, Brussels** GE Semiconductor, TEL: (2) 673 81 59/660 20 19
Intl	**England, Basingstoke** Intersil Datel (U.K.) Ltd., TEL: 0256-57361
Intl	**France, St. Cloud-Cedex** Intersil Datel Sarl, TEL: (1) 602.58.98
Intl	**Hong Kong, Kowloon** Intersil Datel, TEL: 3-7214286-7

Intersil (Cont)

Intl	**Italy, Milano** GE Semiconductor, TEL: 8229709/10/11, 8264364
Intl	**Italy, Milano** General Electric Semiconductor, TEL: 8229709/10/11 or 8264364
Intl	**Japan, Tokyo** Far East Semiconductor Marketing Operation, TEL: (03) 589-1644
Intl	**Japan, Tokyo** Far East Semiconductor Marketing Operation, TEL: (03) 589-1644
Intl	**Japan, Tokyo** GE Semiconductor, TEL: (03) 589-1644
Intl	**Korea, Seoul** G.E. (U.S.A.) Korea Company, TEL: 744-7215 or 7252
Intl	**Korea, Seoul** GE (U.S.A.), TEL: 744-7215/7252
Intl	**Singapore** Electronic Components of G.E. (U.S.A.) Pte., Ltd., TEL: 2983522
Intl	**Singapore** Electronic Components of GE (U.S.A.), TEL: 2983522
Intl	**Spain, Madrid** GE Technical Services, TEL: 276-7062
Intl	**Spain, Madrid 6** General Electric Technical Services Co., Inc., TEL: 276-7062
Intl	**Sweden, Spanga** Int'l G.E. A.B., TEL: 8-7939500
Intl	**Sweden, Spanga** International G.E. AB, TEL: 8-7939500
Intl	**West Germany, Frankfurt** General Electric Technical Services Co., Inc., TEL: 7607333
Intl	**West Germany, Frankfurt/Main** GE Technical Services, TEL: 7607333
Intl	**West Germany, Muenchen** Intersil Datel GmbH, TEL: 089-514900

Distributors

AL	**Huntsville** Arrow Electronics, 205-837-6955
AL	**Huntsville** Hamilton/Avnet, 205-837-7210
AL	**Huntsville** Kierulff Electronics, 205-883-6070
AL	**Huntsville** Schweber Electronics, 205-882-2200
AZ	**Phoenix** Kierulff Elctrns., 602-437-0750
AZ	**Phoenix** Schweber, 602-997-4874
AZ	**Phoenix** Wyle Distribution Grp., 602-866-2888
AZ	**Tempe** Arrow, 602-968-4800
AZ	**Tempe** Hamilton/Avnet, 602-231-5100
CA	**Calabasas** Wyle Laboratories, 818-880-9001
CA	**Canoga Park** Schweber Electronics, 213-999-4702
CA	**Chatsworth** Arrow Electronics, 818-701-7500
CA	**Chatsworth** Avnet Electronics, 818-700-2600
CA	**Chatsworth** Hamilton Electro Sales, 818-700-6500
CA	**Costa Mesa** Avnet Elctrns., 714-754-6111
CA	**Costa Mesa** Hamilton Electro. Sales, 714-641-4100
CA	**Culver City** Hamilton Electro. Sales, 213-558-2121
CA	**Cypress** Kierulff Electronics, 714-220-6300
CA	**El Segundo** Wyle Distribution Grp., 213-322-8100
CA	**Gardena** Schweber Electronics, 213-327-8409
CA	**Hayward** Arrow Electronics, 415-487-4600
CA	**Irvine** Schweber Elctrns., 714-863-0200
CA	**Irvine** Wyle Distribution Grp., 714-863-9953
CA	**Irvine** Wyle Military, 714-851-9953
CA	**Los Angeles** Kierulff Elctrns., 213-725-0325
CA	**Mountain View** Intectra, 415-967-8818
CA	**Mtn. View** Intectra, 415-967-8818
CA	**Ontario** Hamilton Avnet, 714-989-9411
CA	**Rancho Cordova** Wyle Distribution Group, 916-638-5282
CA	**Sacramento** Arrow Electronics, 916-925-7456
CA	**Sacramento** Hamilton Avnet, 916-925-2216
CA	**Sacramento** Schweber Electronics, 916-929-9732
CA	**San Diego** Arrow Elctrns., 619-565-4800
CA	**San Diego** Hamilton/Avnet, 619-571-7500
CA	**San Diego** Kierulff Electronics, 619-278-2112
CA	**San Diego** Schweber Electronics, 619-450-0454
CA	**San Diego** Wyle Distribution Grp., 619-565-9171
CA	**San Jose** Kierulff Elctrns., 408-971-2600
CA	**San Jose** Schweber Electronics, 408-946-7171
CA	**Santa Clara** Wyle Distribution Grp., 408-727-2500
CA	**Sunnyvale** Arrow Elctrns., 408-745-6600
CA	**Sunnyvale** Hamilton/Avnet, 408-743-3355
CA	**Tustin** Arrow Electronics, 714-838-5422
CA	**Tustin** Kierulff Elctrns., 714-731-5711
CO	**Aurora** Arrow Electronics, 303-696-1111
CO	**Englewood** Hamilton Avnet, 303-740-1000
CO	**Englewood** Kierulff Elctrns., 303-790-4444
CO	**Englewood** Schweber Electronics, 303-799-0258
CO	**Thornton** Wyle Distribution Grp., 303-457-9953
CT	**Danbury** Hamilton/Avnet, 203-797-2800
CT	**Danbury** Schweber Elctrns., 203-748-7080
CT	**Meriden** Lionex Corporation, 203-237-2282
CT	**Wallingford** Arrow Elctrns., 203-265-7741
CT	**Wallingford** Kierulff Electronics, 203-265-1115
FL	**Altamonte Springs** Schweber Elctrns., 305-331-7555
FL	**Deerfield Beach** Arrow Elctrns., 305-429-8200
FL	**Ft. Lauderdale** Hamilton/Avnet Elctrns., 305-979-2900
FL	**Ft. Lauderdale** Kierulff Electronics, 305-486-4004
FL	**Hollywood** Schweber Elctrns., 305-921-0301
FL	**Palm Bay** Arrow Elctrns., 305-725-1480
FL	**St. Petersburg** Hamilton/Avnet Elctrns., 813-576-3930
FL	**St. Petersburg** Kierulff Electronics, 813-576-1966
FL	**Winter Park** Hamilton/Avnet Electronics, 305-628-3888
GA	**Norcross** Arrow Elctrns., 404-449-8252
GA	**Norcross** Hamilton/Avnet Elctrns., 404-447-7500
GA	**Norcross** Kierulff Electronics, 404-447-5252
GA	**Norcross** Schweber Elctrns., 404-449-9170
IL	**Alsip** Newark Electronics, 312-371-9000
IL	**Bensonville** Hamilton/Avnet Elctrns., 312-860-7700
IL	**Chicago** Newark Elctrns., 312-784-5100
IL	**Elk Grove Village** Schweber Elctrns., 312-364-3774
IL	**Itasca** Kierulff Electrns., 312-250-0500
IL	**Schaumburg** Arrow Elctrns., 312-397-3440
IN	**Carmel** Hamilton/Avnet Elctrns., 844-9333
IN	**Carmel** Hamilton/Avnet Electronics, 317-844-9333
IN	**Indianapolis** Advent Elctrns., Inc., 317-872-4910
IN	**Indianapolis** Arrow Elctrns., 317-243-9353
IA	**Cedar Rapids** Advent Elctrns., 319-363-0221
IA	**Cedar Rapids** Arrow Electronics, 319-395-7230
IA	**Cedar Rapids** Hamilton/Avnet Electronics, 319-362-4757
IA	**Cedar Rapids** Schweber Elctrns., 319-373-1417
KS	**Overland Park** Hamilton Avnet, 913-888-8900
KS	**Overland Park** Schweber Electronics, 913-492-2922
MD	**Columbia** Arrow Elctrns., 301-995-0003
MD	**Columbia** Hamilton Avnet, 501-995-3500
MD	**Columbia** Lionex Corp., 301-964-0040
MD	**Gaithersburg** Schweber Elctrns., 301-840-5900
MD	**Linthicum** Kierulff Electronics, 301-636-5800
MA	**Bedford** Schweber Elctrns., 617-275-5100
MA	**Billerica** Kierulff Elctrns., 617-667-8331
MA	**Norwood** Gerber Elctrns., 617-769-6000
MA	**Wilmington** Lionex, 617-657-5170
MA	**Wilmington** Lionex Corporation, 617-657-5170
MA	**Woburn** Arrow Elctrns., 617-933-8130
MA	**Woburn** Hamilton Avnet, 617-273-7500
MI	**Ann Arbor** Arrow Elctrns., 313-971-8220
MI	**Grand Rapids** Arrow Electronics, 616-243-0912
MI	**Grand Rapids** Hamilton/Avnet Electronics, 616-243-8805
MI	**Livonia** Hamilton Avnet, 313-522-4700

Intersil (Cont)

MI	**Livonia**	Schweber Elctrns., 313-525-8100
MN	**Edina**	Arrow Elctrns., 612-830-1800
MN	**Edina**	Kierulff Elctrns., 612-941-7500
MN	**Edina**	Schweber Electronics, 612-941-5280
MN	**Minnetonka**	Hamilton Avnet, 612-932-0600
MO	**Earth City**	Hamilton Avnet, 314-344-1200
MO	**Earth City**	Schweber Electronics, 314-739-0526
MO	**Maryland Heights**	Kierulff Electronics, 314-739-0855
MO	**St. Louis**	Arrow Elctrns., 314-567-6888
NH	**Manchester**	Arrow Elctrns., 603-668-6968
NH	**Manchester**	Hamilton/Avnet Electronics, 603-624-9400
NH	**Manchester**	Schweber Electronics, 603-625-2250
NJ	**Cherry Hill**	Hamilton Avnet, 609-424-0110
NJ	**Fairfield**	Arrow Elctrns., 201-575-5300
NJ	**Fairfield**	Hamilton Avnet, 201-575-3490
NJ	**Fairfield**	Kieruff Electronics, 201-575-6750
NJ	**Fairfield**	Lionex, 201-227-7960
NJ	**Fairfield**	Schweber Elctrns., 201-227-7880
NJ	**Marlton**	Arrow Elctrns., 609-596-8000
NJ	**Mt. Laural**	Kierulff Electronics, 609-235-1444
NM	**Albuquerque**	Arrow Elctrns., 505-243-4566
NM	**Albuquerque**	Hamilton Avnet, 505-765-1500
NY	**Farmingdale**	Arrow Electronics, 516-293-6363
NY	**Hauppauge**	Arrow Elctrns., 516-231-1000
NY	**Hauppauge**	Hamilton Avnet, 516-231-9800
NY	**Hauppauge**	Lionex Corporation, 516-273-1660
NY	**Liverpool**	Arrow Elctrns., 315-652-1000
NY	**Melville**	Arrow Elctrns., 516-391-1300
NY	**New York**	Avnet, Inc., 212-644-1050
NY	**Rochester**	Arrow Elctrns., 716-427-0300
NY	**Rochester**	Hamilton Avnet, 716-475-9130
NY	**Rochester**	Schweber Elctrns., 716-424-2222
NY	**Rome**	Rome Electronics, 315-337-5400
NY	**Suracuse**	Hamilton Avnet, 315-437-2641
NY	**Westbury**	Hamilton/Avnet Export, 516-997-6868
NY	**Westbury**	Schweber Elctrns., 516-334-7474
NC	**Charlotte**	Electronics Marketing, 704-394-6195
NC	**Raleigh**	Arrow Elctrns., 919-876-3132
NC	**Raleigh**	Hamilton Avnet, 919-878-0810
NC	**Raleigh**	Kierulff Electronics, 919-872-8410
NC	**Raleigh**	Schweber Electronics, 919-876-0000
NC	**Winston-Salem**	Arrow Elctrns., 919-725-8711
OH	**Beachwood**	Schweber Elctrns., 216-464-2970
OH	**Bedford Heights**	Kierulff Electronics, 216-587-6558
OH	**Centerville**	Arrow Elctrns., 513-435-5563
OH	**Centerville**	Schweber Electronics, 513-439-1800
OH	**Cleveland**	Hamilton Avnet, 216-831-3500
OH	**Columbus**	Arrow Electronics, 614-885-8362
OH	**Columbus**	Electronics Marketing, 614-299-4161
OH	**Dayton**	Hamilton Avnet, 513-433-0610
OH	**Dayton**	Kierulff Electronics, 513-439-0045
OH	**Dayton**	Kierulff Electronics, 513-439-0045
OH	**Highland Heights**	Electronics Marketing, 216-442-3441
OH	**Kettering**	Electronics Marketing, 513-439-4711
OH	**Solon**	Arrow Elctrns., 216-248-3990
OH	**Westerville**	Hamilton/Avnet Electronics, 614-882-7004
OK	**Tulsa**	Arrow Electronics, 918-665-7700
OK	**Tulsa**	Kierulff Electronics, 918-252-7537
OK	**Tulsa**	Norvell Electronics, 918-254-8806
OK	**Tulsa**	Norvell Electronics, 918-254-8606
OK	**Tulsa**	Schweber Electronics, 918-622-0000
OR	**Hillsboro**	Wyle Distribution, 503-640-6000
OR	**Lake Oswego**	Hamilton Avnet, 503-635-8157
OR	**Portland**	Kierulff Elctrns., 503-641-9150
OR	**Tigard**	Arrow Electronics, 503-684-1690
OR	**Tigard**	Arrow Electronics, 503-684-1690
PA	**Horsham**	Lionex, 215-443-5150
PA	**Horsham**	Lionex Corp, 215-443-5150
PA	**Horsham**	Schweber Elctrns., 215-441-0600
PA	**Monroeville**	Arrow Elctrns., 412-856-7000
PA	**Pittsburgh**	Hamilton/Avnet, 412-281-4150
PA	**Pittsburgh**	Hamilton/Avnet Electronics, 412-281-4150
PA	**Pittsburgh**	Schweber Elctrns., 412-782-1600
TX	**Austin**	Arrow Elctrns., 512-835-4180
TX	**Austin**	Hamilton Avnet, 512-837-8911
TX	**Austin**	Kierulff Electronics, 512-835-2090
TX	**Austin**	Norvell Electronics, 512-458-8106
TX	**Austin**	Norvell Electronics, 512-458-8106
TX	**Austin**	Schweber Electronics, 512-458-8253
TX	**Austin**	Wyle Distribution, 512-834-9957
TX	**Austin**	Wyle Distribution Group, 512-834-9957
TX	**Carrollton**	Arrow Elctrns., 214-380-6464
TX	**Dallas**	Kierulff Electronics, 214-343-2400
TX	**Dallas**	Norvell Electronics, 214-233-0020
TX	**Dallas**	Norvell Electronics, 214-233-0020
TX	**Dallas**	Schweber Elctrns., 214-661-5010
TX	**Houston**	Arrow Elctrns., 713-530-4700
TX	**Houston**	Hamilton Avnet, 713-780-1771
TX	**Houston**	Kierulff Electronics, 713-530-7030
TX	**Houston**	Norvell Electronics, 713-777-1666
TX	**Houston**	Norvell Electronics, 713-777-1666
TX	**Houston**	Schweber Elctrns., 713-784-3600
TX	**Houston**	Wyle Distribution, 713-879-9953
TX	**Houston**	Wyle Distribution Group, 713-879-9953
TX	**Irving**	Hamilton Avnet, 214-659-4100
TX	**Richardson**	Wyle Distribution, 214-235-9953
TX	**Richardson**	Wyle Distribution Group, 214-235-9953
UT	**Salt Lake City**	Arrow Electronics, 801-972-0404
UT	**Salt Lake City**	Arrow Electronics, 801-972-0404
UT	**Salt Lake City**	Hamilton Avnet, 801-972-2800
UT	**Salt Lake City**	Kierulff Elctrns., 801-973-6913
UT	**Salt Lake City**	Wyle Distribution Group, 801-974-9953
VA	**Richmond**	Arrow Electronics, 804-282-0413
WA	**Bellevue**	Arrow Electronics, 206-643-4800
WA	**Bellevue**	Arrow Electronics, 206-643-4800
WA	**Bellevue**	Hamilton Avnet, 206-643-3950
WA	**Bellevue**	Wyle Distribution Grp., 206-453-8300
WA	**Kent**	Kierulff Elctrns., 206-575-4420
WI	**Brookfield**	Arrow Elctrns., 414-792-0150
WI	**Brookfield**	Schweber Elctrns., 414-784-9020
WI	**Milwaukee**	Marsh Electronics, 414-475-6000
WI	**Milwaukee**	Marsh Electronics, 414-475-6000
WI	**New Berlin**	Hamilton Avnet, 414-784-4518
WI	**Waukesha**	Kierulff Elctrns., 414-784-8160
Can	**Brampton, Ontario**	Zentronics, 416-451-9600
Can	**Burnaby, BC**	Hamilton Avnet Electronics, 604-437-6667
Can	**Burnaby, British Columbia**	Hamilton Avnet Elctrns., 604-437-6667
Can	**Burnaby, British Columbia**	Hamilton/Avnet, 604-437-6667
Can	**Calgary, Alberta**	Hamilton Avnet Elctrns., 403-230-3586
Can	**Calgary, Alberta**	Zentronics, 403-272-1021
Can	**Mississagua, Ontario**	Hamilton Avnet Elctrns., 416-677-7432

Intersil (Cont)

Can	**Nepean, Ontario** Hamilton Avnet, 613-226-1700
Can	**Nepean, Ontario** Zentronics, 613-226-8840
Can	**Richmond, British Columbia** Zentronics, 604-273-5575
Can	**Saskatoon, Saskatchewan** Zentronics, 306-955-2202
Can	**Saskatoon, Saskatchewan** Zentronics, 306-955-2202
Can	**St. Laurent, Quebec** Hamilton Avnet Int'l., 514-335-1000
Can	**St. Laurent, Quebec** Zentronics, 514-735-5361
Can	**Toronto, Ontario** Canadian GE-ECO, 418-530-2895
Can	**Waterloo, Ontario** Zentronics Ltd., 519-884-5700
Can	**Willowdale, Ontario** Electro Sonic, 416-494-1555
Can	**Winnipeg, Manitoba** Zentronics Ltd., 204-775-8661
Intl	**Australia, Burwood-Victoria** R & D Electronics Pty. Ltd., TEL: 288-8232/8911/8262
Intl	**Australia, Sydney** R & D Electronics Pty. Ltd., TEL: 439-5488
Intl	**Austria, Vienna** Transistor Vertriebsges GmbH, TEL: (02 22) 829401-0
Intl	**Belgium, Brussels** Master Chips SPRL, TEL: (02) 219.58.62, (02) 219.14.84
Intl	**Denmark, Copenhagen** E. V. Johanssen Electronik A-S, TEL: 45-1-839022
Intl	**England, Bedford** Termyn Distribution, TEL: (0732) 450144
Intl	**England, Bedford** The Radio Resistor, TEL: (0234) 47211
Intl	**England, Bedford** The Radio Resistor Co., TEL: (0234) 47211
Intl	**England, Kent** Jermyn Distribution, Ltd., TEL: (0732) 450144
Intl	**England, Redhill, Surrey** Trident Microsystems, Ltd., TEL: (0737) 69217
Intl	**England, Surrey** Trident Microsystems, TEL: (0737) 69217
Intl	**Finland, Espoo** Nabla Elektronikka Oy, TEL: 90-46 28 29, 4552955
Intl	**France, Antony** C.C.I., TEL: (1) 666.21.82
Intl	**France, Lyon** C.C.I., TEL: (78) 742375
Intl	**France, Lyon** CCI, TEL: (78) 742375
Intl	**France, Sevres** Tekelec-Airtronic, TEL: (1) 534.75.35
Intl	**Hong Kong, Kowloon** Conmos Prods. Ltd., TEL: 3-7560103-8
Intl	**Hong Kong, Kowloon** Electocon Products Ltd., TEL: 3-687214-6
Intl	**India, Bombay** Zenith Elctrns., TEL: 202 7877/9464
Intl	**Israel, Herzlia** Vectronics Ltd., TEL: 052-56070
Intl	**Italy, Bologna** Eledra 3S S.P.A., TEL: (51) 307781-340999
Intl	**Italy, Bologna** Eledra 3S S.P.A., TEL: (51) 307781-340999
Intl	**Italy, Milan** Eurelletronia, TEL: 4981851
Intl	**Italy, Milano** Eledra 3S S.P.A., TEL: (2) 349-751
Intl	**Italy, Milano** Eurelletronica, TEL: 4981851
Intl	**Italy, Padova** Eledra 3S S.P.A., TEL: (49) 655488-655749
Intl	**Italy, Padova** Eledra 3S S.P.A., TEL: (49) 655488-655749
Intl	**Italy, Roma** Eledra 3S S.P.A., TEL: (6) 8110151
Intl	**Italy, Roma** Eledra 3S S.P.A., TEL: (6) 8110151
Intl	**Italy, Roma** Pantronic, TEL: 6273909
Intl	**Italy, Roma** Pantronic, TEL: 6273909
Intl	**Italy, Torino** Eledra 3S S.P.A., TEL: (11) 3099111-2-3
Intl	**Italy, Torino** Eledra 3S S.P.A., TEL: (11) 3099111-2-3
Intl	**Japan, Fukuoka** Internix, TEL: (092) 472-7716
Intl	**Japan, Hakata-Ku, Fukouka** Internix, Inc., TEL: (092) 472-7716
Intl	**Japan, Nagana** Internix, TEL: (0268) 25-1610
Intl	**Japan, Nagoya** Internix, TEL: (052) 452-8841
Intl	**Japan, Nakamura-Ku, Nagoya** Internix, Inc., TEL: (052) 452-8841
Intl	**Japan, Osaka** Internix, Inc., TEL: (06) 364-5971
Intl	**Japan, Ouwada-cho Hachioji** Internix, TEL: (0426) 44-8671
Intl	**Japan, Ouwada-cho Hachioji** Internix, Inc., TEL: (0426) 44-8671
Intl	**Japan, Tokyo** Internix Inc., TEL: (03) 369-1101
Intl	**Japan, Uedashi, Nagano** Internix, Inc., TEL: (0268) 25-1610
Intl	**Korea, Seoul** Duk Sung Trading Co., TEL: 856-9764
Intl	**Mtn. View, CA** India-U.S. Office-Fegu Electronics, TEL: 415-961-2380
Intl	**Netherlands, Eindhoven** Auriema Nederland B.V., TEL: 040-816565
Intl	**New Zealand, Auckland** Delphi Industries Ltd., TEL: 563-259
Intl	**Norway, Nesbru** Hans H. Schive A/S, TEL: 02 84.51.60
Intl	**Portugal, Lisbon** Decada Equipamentos, TEL: 2-103420
Intl	**South Africa, Pretoria-Transvaal** Eletronic Bldg., Elements Pty. Ltd., TEL: 46-9221/7
Intl	**Spain, Madrid** Amitron, TEL: (01) 2479313/2479332
Intl	**Sweden, Vallingby** Svensk Teleimport AB, TEL: 08-890265
Intl	**Switzerland, Geneva** Laser & Elctrn. Equip., TEL: 022-425-677
Intl	**Switzerland, Zurich** Laser & Electronic-Equipment, TEL: 01 55 33 30
Intl	**Taiwan, Taipei** Galaxy Far East, TEL: (02) 7811895-7
Intl	**Thailand, Bangkok** Science, Engineering & Education Co. Ltd., TEL: 245-0390, 245-9216
Intl	**Turkey, Ankara** Turkelek Elektronik Ltd., TEL: 18 94 83, 41-252109
Intl	**Turkey, Istanbul** Turkelek Electronics, TEL: 1-1431268, 1434046
Intl	**Turkey, Istanbul** Turkelek Elektronik, Ltd., TEL: 1-1431268/1434046
Intl	**United Kingdom, England Middx** Hawke Electronics Ltd., TEL: (01979) 7799
Intl	**United Kingdom, Leeds** Farnell Elctrn. Comps., TEL: (0532) 636311
Intl	**United Kingdom, Slough-Berks** Macro-Mktg. Ltd., TEL: (06286) 4422
Intl	**West Germany** Bitronic GmbH, TEL: 02 31/52 82 93
Intl	**West Germany, Berlin** Bitronic GmbH, TEL: 030/8052526
Intl	**West Germany, Berlin** Bitronic GmbH, TEL: 0 30/8 05 25 26
Intl	**West Germany, Bueckeburg** Spezial Elctrn. KG, TEL: 05722 2030
Intl	**West Germany, Dortmund** Bitronic GmbH, TEL: 0231/528393
Intl	**West Germany, Ellwangen** Spezial Elctrn., TEL: (07961) 4047
Intl	**West Germany, Frankfurt** Bitronic GmbH, TEL: 06031/9047
Intl	**West Germany, Frankfurt** Bitronic GmbH, TEL: 06031/9047
Intl	**West Germany, Freiburg** Spezial Elctrn., TEL: (06) 031-4634
Intl	**West Germany, Gerlingen** Bitronic GmbH, TEL: 07156/24051
Intl	**West Germany, Gerlingen** Bitronic GmbH, TEL: 0 71 56/2 40 51
Intl	**West Germany, Muenchen** Biotronic GmbH, TEL: 0 89/49/60/01
Intl	**West Germany, Muenchen** Bitronic GmbH, TEL: 089/49/60/01
Intl	**West Germany, Muenchen** Spezial Elctrn. KG, TEL: 89/530387

Intronics

Intronics, Inc.
57 Chapel Street
Newton, Massachusetts 02158
617-964-4000
TWX: 710-335-6835

Sales Office & Representatives

Intl	**Belgium, Brussels** Intercontinental Svcs., Inc., TEL: 011 32 2 6601356
Intl	**France, Chatillon Sous Bagneaux** Gisco/Powerline, TEL: 011-33-746-0310
Intl	**France, Ivry sur Seine** Micro Gisco, TEL: 011 33 16701158
Intl	**India, Calcutta** Hindusthan Const. & Comm. Corp., TEL: 011-91-278104
Intl	**Italy, Milano** Auriema, Italia SRL, TEL: 001 39 2 4988031
Intl	**Japan, Tokyo** Internix, Inc., TEL: 011-81 3 691101
Intl	**Japan, Tokyo** Jepico Corp, TEL: 011 81 3 3480611
Intl	**South Africa, Pinegourie** South Continental Devices (Pty) Ltd.,, TEL: 011 21 480515
Intl	**Sweden, Stockholm** Martinsson & Co., TEL: 011 468 7440300
Intl	**Switzerland, Wallisellen** Sicovend AG, TEL: 011 41 18303161
Intl	**West Germany, Muenchen** Tekelec Airtronic, TEL: 011 49 89 594153

Ironics

Ironics Inc.
Computer Systems Division
798 Cascadilla Street
Ithaca, New York 14850
607-277-4060
TELEX: 705-742

ITT Semiconductors

ITT Semiconductors
7 Lake St.
Lawrence, Massachusetts 01841
617-688-1881
TELEX: 947413
TWX: 710-342-1357

Sales Office & Representatives

Intl	**Brazil, Sao Paulo** ITT Comps., TEL: (005511) 257-5285
Intl	**England, Kent** ITT Semiconductors, TEL: 3003333
Intl	**Hong Kong, Kowloon** Isostat Far East Switches Ltd.
Intl	**India, New Delhi** Krishan Auropa Co.
Intl	**Israel, Tel Aviv** Radion Engrg. Co., Ltd.
Intl	**Japan, Tokyo** ITT Semiconductors, TEL: 3478881-5
Intl	**Korea, Seoul** Korea Intl. Trading Co.
Intl	**New Zealand, Auckland** STC Waldo Hunter
Intl	**Taiwan, Taipei** Origineering Ltd.
Intl	**West Germany, Freiburg** Intermetall (H.Q.), TEL: (761) 5171

IXYS Corporation

IXYS Corporation
142 Charcot Ave.
San Jose, California 95131
408-262-8800

Kinetic Systems

Kinetic Systems Corporation
11 Maryknoll Drive
Lockport, Illinois 60441
815-838-0005
TWX: 910-638-2831

Sales Office & Representatives

Intl	**Australia, Redfern** Quentron Optics Pty., Ltd., TEL: (02) 698-9277
Intl	**Denmark, Copenhagen NV** Hans Buch & Co., TEL: 01-83 12 12
Intl	**England, Northwich, Cheshire** Sension Limited, TEL: Northwich (0606) 44321
Intl	**Finland, Espoo** Oy Emmett AB, TEL: 90-882 044
Intl	**France, BUC** INEL Instrumentation Electronique, TEL: (3) 956.31.90
Intl	**India, Bombay** Electronic Enterprises, TEL: 8827096
Intl	**Italy, Milano** Elettronucleonica S.P.A., TEL: 02/49.82.451
Intl	**Japan, Tokyo** TOYO Corp., TEL: 03 279 0771
Intl	**Sweden, Stockholm** Nucletron AB, TEL: 46 - 8 44 90 55
Intl	**Switzerland, Zuchwil** Kinetic Systems Intl. S.A., TEL: (065) 25 29 25

Kontron Electronics

Kontron Electronics, Inc.
630 Price Avenue
Redwood City, California 94063
415-361-1012
TWX: 910-378-5207

Sales Office & Representatives

Intl	**Austria, Wein** Kontron Elektronik GmbH & Co., TEL: 0043-222-670631-0
Intl	**Belgium, Brussels** C.N. Rood B.V., TEL: 0032-2-7352135
Intl	**Denmark, Hoersholm** E. Blichfeld APS, TEL: 0045-2867900
Intl	**England, St. Albans** Kontron Instruments Ltd., TEL: 0044-727-66222
Intl	**Finland, Helsinki** OY Emmet AB, TEL: 0035-80-882044
Intl	**France, Velizy-Villacoublay** Kontron Electronique, TEL: 00331-946722
Intl	**Israel, Haifa** Tabor Electronics, TEL: 00972-4-644280
Intl	**Italy, Milano** Telav International SRL, TEL: 0039-2-4455741
Intl	**Netherlands, Rijswijk** C.N. Rood B.V., TEL: 0031-70-996360
Intl	**Norway, Oslo** Bergman Instrumentering A/S, TEL: 0047-2-650410
Intl	**Portugal, Lisbon Codex** Mattos Tavares Electronics Lda, TEL: 00351-19-616261
Intl	**South Africa, Randburg** Specitec (Pty) Ltd., TEL: 793-1275-4-3
Intl	**Spain, Madrid** Belport Instrumentation SA, TEL: 00341-2628837
Intl	**Sweden, Sundyberg** AB Transfer, TEL: 0045-8981620
Intl	**Switzerland, Epalinges** Kontron Electronic AG, TEL: 0041-21331535
Intl	**Switzerland, Zurich** Kontron Instruments AG, TEL: 0041-1-4354111
Intl	**West Germany, Eching bei Muchen** Kontron Messtechnik GmbH, TEL: 0049-89-31901-0

Distributors

Intl	**Argentina, Buenos Aires** Reycom Electronica, TEL: 33-7020/7026
Intl	**Australia, Melbourne** Parameters, TEL: 03-580-7444
Intl	**Australia, Sydney** Parameters, TEL: 02-439-3288
Intl	**Brazil, San Paulo, Rio, Porto Alegre** Cosele Instrumentos Electronicos, TEL: 255-1733
Intl	**Finland, Helsinki** OY Emmet AB, TEL: 0035-80-882044
Intl	**Hong Kong, Kwun Tong** Hong Kong Equipment Center, TEL: 3-413888
Intl	**Japan, Tokyo** Tomas Electron, TEL: 03-798-0481
Intl	**Korea, Seoul** Lucky Goldstar Intl., TEL: 77132
Intl	**New Zealand, Auckland** Professional Electronics, TEL: 493-029
Intl	**Singapore** Singapore Electronic & Engineering (Private) Ltd., TEL: 257-0211
Intl	**Taiwan, Taipei** Gorman Co., Ltd., TEL: 02-5421924

Lambda

Lambda Semiconductors
121 International Drive
Corpus Christi, Texas 78410
512-289-0403 (In Texas)
1-800-255-9606
TWX: 910-876-1404

Sales Office & Representatives

Intl	**England, High Wycombe, Bucks** Lambda Electronics, TEL: 44-494-36386
Intl	**France, Les Ulis Cedex** Lambda Electronique S.A., TEL: 33-6-012-1487
Intl	**Germany, Achern** Lambda Netzgerate GmbH, TEL: 49-7841-5031
Intl	**Israel, Tel Aviv** IsLambda Electronics Ltd., TEL: 493-9-414-243
Intl	**Japan, Tokyo** Nemic-Lambda K.K., TEL: 03-490-5813

Lattice Semiconductor

Lattice Semiconductor Corp.
15400 N.W. Greenbrier Pkwy.
Beaverton, Oregon 97006
503-629-2131
TELEX: 277338 LSC UR

Specific product information:
Representative
Application engineering:
503-246-2726
Literature:
Representative
Price and delivery:
Representative or Distributor
Place an order:
Representative or Distributor
Follow-up an order:
Representative or Distributor

Sales Office & Representatives

AL	**Huntsville** Beacon Electronics, 205-881-5031
AZ	**Phoenix** Shefier-Kahn Company, Inc., 602-257-9015
AR	**Little Rock** Beacon Electronics, 501-224-5449
CA	**Canoga Park** Hi-Technical Sales
CA	**Garden Grove** Hi-Technical Sales, 714-740-0161
CA	**San Diego** Earle & Associates, 619-278-5441
CA	**San Jose** H-Technical Sales, 408-279-2443
CO	**Arvada** Wescom Marketing, 303-773-0225
FL	**Orlando** Donato & Associates, 305-352-0727
GA	**Atlanta** Beacon Electronics, 404-256-9640
IL	**Barrington** Omni Electronic Marketing, 312-381-9087
IA	**Davenport** Rush & West Associates, 319-326-3091
KS	**O'Lathe** Rush & West Assoc., Inc., 913-764-2700
MD	**Columbia** Delta III Associates, Inc., 301-730-4700
MA	**Burlington** Advanced Technical Sales, 617-272-0100

Lattice Semiconductor (Cont)

MI	**Belmont** KRW Sales, 616-363-2925
MN	**Minneapolis** P.S.I. Company, 612-944-8545
MO	**Ballwin** Rush & West Assoc., Inc., 314-394-7271
NJ	**Marlton** BGR Associates, 609-983-1020
NM	**Albuquerque** Shefler-Kahn Company, Inc., 505-345-3591
NY	**Wantaugh** Tri-Tek Associates, 516-747-8851
NC	**Raleigh** Beacon Electronics, 919-787-0330
OH	**Columbus** KRW Sales, 614-464-1861
OH	**Westlake** KRW Sales, 216-871-7521
OK	**Tulsa** Beacon Electronics, 918-252-5181
OR	**Beaverton** LD Electronics, 503-649-8556
PA	**Oakmont** KRW Sales, 412-261-1323
TX	**Austin** Beacon Electronics, 512-331-5115
TX	**Dallas** Beacon Electronics, 214-437-1505
UT	**Salt Lake City** Wescom Marketing, 801-466-9594
VA	**Midlothian** Delta III Associates, 804-272-2497
WA	**Snohomish** LD Electronics, 206-568-0511
WA	**Spokane** LD Electronics, 509-922-4883
WI	**Madison** Omni Electronic Marketing, 414-548-1971

Distributors

CA	**Los Angeles** Kierulff Electronics Inc., 213-725-0325, 1-800-367-7767

Linear Technology Corporation

Linear Technology Corporation
1630 McCarthy Blvd.
Milpitas, California 95035-7487
408-942-0810
TELEX: 499-3977

Distributors

Intl	**Austria** Bacher Elektronische Gerate GmbH, TEL: 43-222-835646
Intl	**Belgium** Microtron, TEL: 32-16-60586
Intl	**Denmark** E. V. Johanssen Elektronik A/S, TEL: 45-1-839022
Intl	**Finland** OY Fintronic AB, TEL: 358-0-6926022
Intl	**France** Tekelec Airtronic, TEL: 33-1-5347535
Intl	**Israel** Vectronics Ltd., TEL: 972-52-556070
Intl	**Italy** Eledra 3 S S.P.A., TEL: 39-2-349751
Intl	**Japan** Japan Macnics Corporation, TEL: 044-711-0022
Intl	**Japan** Technology Trading Corporation, TEL: 044-03-258-1771
Intl	**Japan** Tomen Elctrns., TEL: 044-506-4670
Intl	**Netherlands** Alcom Electronics BV, TEL: 31-10-519533
Intl	**Norway** Eltron A/S, TEL: 47-2-462870
Intl	**Spain** Amitron, S.A., TEL: 34-1-2485863
Intl	**Sweden** Svensk Teleindustri, TEL: 46-8-380320
Intl	**Switzerland** Stolz AG, TEL: 41-56-840151
Intl	**Turkey** Turkelec Elctrn. Co., TEL: 90-41-2552109
Intl	**United Kingdom** Dialogue Distribution, Ltd., TEL: 44-276-682001
Intl	**United Kingdom** Eltek Semiconductors Ltd., TEL: 44-80-434455
Intl	**United Kingdom** Microcall, Ltd., TEL: 44-84421-5405
Intl	**West Germany** Alfred Neye, TEL: 49-4106-6121
Intl	**West Germany** Metronik, TEL: 49-89-6114063
Intl	**Yugoslavia** Ellyptic AG, TEL: 41-1-4931000

Linear Technology Inc.

Linear Technology Inc.
P. O. Box, Station A
Burlington, Ontario L7R 3Y3
416-632-2996
TELEX: 061-8525

Logic Devices Inc.

Logic Devices Inc.
628 E. Evelyn Avenue
Sunnyvale, California 94086
408-720-8630

Logical Design Group

Logical Design Group Inc.
541 Pylon Drive
Raleigh, North Carolina 27606
919-834-8827

Logicraft

Logicraft
3 Graham Drive
Nashua, New Hampshire 03060
603-888-4448
TELEX: 70 3961

LMS Electronics

LMS Electronics
3401 Monroe Road
Charlotte, North Carolina 28205
704-376-7805

Lomas Data Products

Lomas Data Products, Inc.
66 Hopkinton Road
Westboro, Massachusetts 01581
617-366-6434

LSI Computer Systems

LSI Computer Systems, Inc.
1235 Walt Whitman Road
Melville, New York 11747
516-271-0400
TWX: 510-226-7833

Specific product information:
Ronald Colino
Application engineering:
Ronald Colino
Literature:
Nancy Leidig
Price and delivery:
Nancy Leidig
Follow-up an order:
Nancy Leidig
All other information:
Nancy Leidig
For Intl. sales: Martin Essenburg, Standard Products Marketing Mgr.

Sales Office & Representatives

AL	**Huntsville** REMCO, 205-533-3763
CA	**Santa Clara** Fischer Assocs., 408-733-7350
CO	**Boulder** Starsales, 303-440-4193
DE	**Wilmington** Electro Tech Sales, 302-764-2189
FL	**Altamonte Springs** 'C' Associates, 305-831-1717
GA	**Atlanta** REMCO, 404-477-6937
IL	**McHenry** Mesa, Inc., 815-344-2820
IA	**Cedar Rapids** C.H. Horn Assoc., 319-393-8703
KS	**Wichita** D 6 M Electronics, 316-266-6862
MD	**West Friendships** Gans & Pugh, Inc., 301-442-2189
MA	**Taunton** Forsberg Sales, 617-522-6300
MI	**Southfield** R.C. Nordstrom, 313-559-7373
MN	**Roseville** TLC Electronics, 612-483-2226
NJ	**Hasbrouck Heights** Comp-Tech Sales, 201-288-7400
NM	**Albuquerque** Nelco Electronix, 505-293-1399
NY	**New Hyde Park** Comp-Tech Sales, 516-593-2628
NY	**Penfield** Barthel Entprs., 716-377-3018
NC	**Raleigh** REMCO, 919-847-5079
OH	**Cleveland** Components, Inc., 216-243-9200
OH	**West Carrollton** Components, Inc., 513-866-0661
TX	**Houston** Electronic Mktg. Assoc., 713-498-8120
VA	**Arlington** Gans & Pugh, Inc., 703-527-3262
WA	**Bellevue** Electronic Sources, 206-451-3500

LSI Computer Systems (Cont)

WI	**Mequon**	Stumm Sales, 414-241-8414

Distributors

CA	**San Carlos**	Logan Electronics, 415-594-0700
IL	**Elmhurst**	Belco Electronics, 312-544-3303
NJ	**Hasbrouck**	Tory Sales, 201-288-7400
Can	**Mississauga, Ontario**	RFM Electro Sales, 416-667-0027

LSI Logic

LSI Logic Corporation
1601 McCarthy Boulevard
Milpitas, California 95035
408-263-9494
TELEX: 172 153

Sales Office & Representatives

AL	**Huntsville**	Montgomery Marketing, 205-830-0498
AZ	**Scottsdale**	Luscombe Engineering, 602-949-9333
CA		LSI Logic Milpitas, 408-263-9494
CA	**Irvine**	Centaur Corporation, 714-261-2123
CA	**Mountain View**	Taarcom, Inc., 415-960-1550
CA	**Woodland Hills**	Centaur Corp., 213-704-1655
CO	**Littleton**	Simpson Associates, 303-794-8381
CT	**Waterbury**	HLM Associates, 203-753-9894
FL	**Altamonte Springs**	Semtronic Associates, 305-831-8233
FL	**Clearwater**	Semtronic Assoc., 813-461-4675
FL	**Ft. Lauderdale**	Semtronic Assoc., 305-731-2484
GA	**Norcross**	Montgomery Marketing, 404-447-6124
IL	**(Southern)**	Design Solutions, 314-227-7170
IL	**Elk Grove Village**	Oasis Sales, 312-640-1850
IN	**Indianapolis**	Electro Rep, 317-842-7202
MD	**Columbia**	Delta III Associates, 301-730-4700
MI	**Detroit**	Rathsburg Associates, 313-882-1717
MN	**Minneapolis**	HMR, 612-888-2122
MO	**St. Louis**	Design Solutions, 314-227-7170
NJ	**Parsippany**	HLM Assoc., 201-263-1535
NY	**Northport**	HLM Assoc., 516-757-1606
NY	**Syracuse**	T-Squared Elctrns., 315-463-8592
NY	**Victor**	T-Squared Elctrns., 716-924-9101
NC	**Cary**	Montgomery Marketing, 919-467-6319
OH	**Dayton**	Lyons Corp., 513-278-0714
OH	**Richfield**	Lyons Corp., 216-659-9224
OR	**Portland**	Westerberg & Associates, 503-620-1931
PA	**Rosemont**	Circuit 21, 215-527-0624
TX	**Austin**	Technology Sales, 512-346-9940
TX	**Dallas**	Technology Sales, 214-380-0200
TX	**Houston**	Technology Sales, 713-266-2473
UT	**Midvale**	Simpson Associates, 801-566-3691
VA	**Richmond**	Delta III Assocs., 804-745-2215
WA	**Belevue**	Westerberg & Associates, 206-453-8881
WI	**Brookfield**	Oasis Sales, 414-782-6660
Can	**B.C.**	Westerberg & Associates, 206-453-8881, TWX 910-443-2319
Can	**Ottawa, Ontario**	RFQ Limited, 613-820-8445, TWX 610-562-1973
Intl	**Denmark, Copenhagen**	E.V. Johanssen, TEL: 45-1-839022
Intl	**England, Berkshire**	LSI Logic Ltd., TEL: 011-44-344-426544
Intl	**England, Thame**	Microcall Ltd., TEL: TLX 837-917
Intl	**France, Choisy-Le-Roi**	Jermyh S.A., TEL: 33-1-8531200
Intl	**Germany, Munich**	LSI Logic, TEL: 49-592552-595254
Intl	**Israel, Ramat Hasharon**	RDT Elctrns., TEL: 972-3-438211-5
Intl	**Italy, Milano**	Compnel S.P.A., TEL: 2-61-20-641(2,3,45)
Intl	**Norway, Rud**	Gylling Teledata AS, TEL: 47-2-136170
Intl	**Sweden, Stockholm**	Gylling Teledata AB, TEL: 46-8-7339020
Intl	**Switzerland, Baden-Dattwil**	Stoltz AG, TEL: 41-56-840151

Distributors

AL	**Huntsville**	Hamilton Avnet, 205-837-7210
AZ	**Phoenix**	Hamilton Avnet, 602-231-5100
CA	**Los Angeles**	Avnet, 213-558-2345
CA	**Los Angeles**	Hamilton, 213-558-2121
CA	**Los Angeles**	Hamilton Avnet Int'l. Export, 213-558-2441
CA	**O.C.**	Avnet, 714-754-6111
CA	**O.C.**	Hamilton, 714-641-4100
CA	**Sacramento**	Hamilton Avnet, 916-925-2216
CA	**San Diego**	Hamilton Avnet, 619-571-7510
CA	**San Francisco**	Avnet, 818-700-2600
CA	**San Francisco**	Hamilton, 213-558-2323
CA	**San Francisco**	Hamilton Avnet, 408-743-3355
CA	**San Gabriel**	Hamilton Avnet, 714-989-4602
CA	**Santa Clara**	Wyle, 408-727-2500
CO	**Denver**	Hamilton Avnet, 303-779-9998
CT	**Danbury**	Hamilton Avnet, 203-797-2800
FL	**Melbourne**	Hamilton Avnet, 305-725-2700
FL	**Miami**	Hamilton Avnet, 305-971-2900
FL	**Orlando**	Hamilton Avnet, 305-628-3888
FL	**St. Petersburg**	Hamilton Avnet, 813-576-3930
GA	**Atlanta**	Hamilton Avnet, 404-447-7507
IL	**Champaign-Urbana**	Hamilton Avnet, 800-625-8654
IL	**Chicago**	Hamilton Avnet, 312-860-7700
IN	**Indiapapolis**	Hamilton Avnet, 317-844-9333
KS	**Kansas City**	Hamilton Avnet, 913-888-8900
KS	**Wichita**	Hamilton Avnet, 800-532-6720
KY	**Lexington**	Hamilton Avnet, 800-543-4783
KY	**Louisville**	Hamilton Avnet, 800-438-6012
MD	**Baltimore**	Hamilton Avnet, 301-995-3500
MA	**Boston**	Hamilton Avnet, 617-273-7500
MI	**Detroit**	Hamilton Avnet, 313-522-4700
MI	**Grand Rapids**	Hamilton Avnet, 616-243-8805
MN	**Minneapolis**	Hamilton Avnet, 612-932-0600
MO	**St. Louis**	Hamilton Avnet, 314-344-1200
NE	**Omaha**	Hamilton Avnet, 800-255-6702
NJ	**Cherry Hill**	Hamilton Avnet, 609-424-0100
NJ	**Fairfield**	Hamilton Avnet, 201-575-3390
NM	**Albuquerque**	Hamilton Avnet, 505-765-1500
NY	**Hauppague**	Hamilton Avnet Int'l. Export, 516-231-9800
NY	**Rochester**	Hamilton Avnet, 716-475-9130
NY	**Syracuse**	Hamilton Avnet, 315-437-2641
NY	**Westbury**	Hamilton Avnet, 516-997-6868
NC	**Raleigh**	Hamilton Avnet, 919-878-0810
OH	**Cleveland**	Hamilton Avnet, 216-831-3500
OH	**Columbus**	Hamilton Avnet, 614-882-7004
OH	**Dayton**	Hamilton Avnet, 513-433-0610
OR	**Portland**	Hamilton Avnet, 503-635-8831
PA	**Philadelphia**	Hamilton Avnet, 215-831-1300
PA	**Pittsburgh**	Hamilton Avnet, 800-321-6890
SC	**Columbia**	Hamilton Avnet, 800-334-1597
TX	**Austin**	Hamilton Avnet, 512-837-8911
TX	**Dallas**	Hamilton Avnet, 214-659-4111
TX	**Houston**	Hamilton Avnet, 713-780-1771
UT	**Salt Lake City**	Hamilton Avnet, 801-972-2800
WA	**Seattle**	Hamilton Avnet, 206-453-5844
WV	**Charleston**	Hamilton Avnet, 800-543-4783
WV	**Huntington**	Hamilton Avnet, 800-543-4783
WI	**Milwaukee**	Hamilton Avnet, 414-784-4510

LSI Logic (Cont)

Can **Calgary, Alberta**
Hamilton Avnet, 403-230-3586

Can **Montreal, Quebec**
Hamilton Avnet, 514-335-1000

Can **Ottawa, Ontario**
Hamilton Avnet, 613-226-1700

Can **Toronto, Ontario**
Hamilton Avnet, 416-677-7432

Can **Vancouver, British Columbia**
Hamilton Avnet, 604-272-4242

Intl **Japan, Tokyo**
Hamilton Avnet, TEL: (03) 662-9911

Master Logic

Master Logic Corporation
761 E. Evelyn Avenue
Sunnyvale, California 94086
408-732-7777

Specific product information:
Stephen R. Allen

Application engineering:
Stephen R. Allen

Literature:
Stephen R. Allen

Price and delivery:
Stephen R. Allen

Follow-up an order:
Stephen R. Allen

All other information:
Charles A. Allen

Matra Design Systems

Matra Design Systems
2840 San Tomas Expressway
Santa Clara, California 95051
408-986-9000
TELEX: 299656
TWX: 408-748-1038

Sales Office & Representatives

Intl **England, GB-Slough**
Matra Harris Semiconductor, TEL: 0753-34.666

Intl **France, Chesnay**
Matra Harris Semiconductor, TEL: (3) 954.80.00

Intl **France, Nantes Cedex**
Matra Harris Semiconductor, TEL: (40) 30.30.30

Intl **Italy, Cinisello Balsamo**
Matra Harris Semiconductor, TEL: 2-618.82.82

Intl **West Germany, Eching**
Matra Harris Semiconductor, TEL: 089-319.10.35

Intl **West Germany, Langenhagen**
Matra Harris Semiconductor, TEL: 0511-73.70.37

Matrix

Matrix Corporation
1639 Green Street
Raleigh, North Carolina 27603
916-833-2837

Matrox

Matrox Electronic Systems Ltd.
1055 St. Regis Blvd.
Doval, Quebec, H9P 2T4, Canada
514-685-2630
TELEX: 05-822798

Sales Office & Representatives

Intl **Australia, Epping**
Mace Co. Pty. Ltd., TEL: 86-4060

Intl **Austria, Vienna**
Bacher Elektronishe Gerate, Ges. m.b.h., TEL: (0220) 835646-0

Intl **Denmark, Glostrup**
Jorgen Andersen Ingeniorfirma A.S., TEL: (02) 91 88 88

Intl **England, Biggin Hill, London**
Perdix Comps., TEL: 9594-71011-15

Intl **Finland, Helsinki**
Oy Fintronic, AB, TEL: 90-692 60 22

Intl **France, Asnieres**
Metrologie, TEL: 7 90-6240

Intl **Greece, Athens**
American Tech. Entprs. S.A., TEL: 8219.470-8811.271

Intl **Hong Kong, Wan-Chai**
Bestland Development Ltd., TEL: 5-8934389-0

Intl **Israel, Givatayim**
EIM Intl. Elctrns. Ltd., TEL: (03) 774-041

Intl **Italy, Milano**
3-G Elctrns. s.r.l., TEL: (02) 5455951

Intl **Japan, Tokyo**
Internix Inc., TEL: (03) 369-1101

Intl **Netherlands, Drimmelen**
Matrox Benelux, TEL: 03456-741

Intl **New Zealand, Auckland**
GTS Engrg., Ltd., TEL: (09) 546-745

Intl **Norway, Hvalstad**
Nordisk Electronik AS, TEL: 84-62 10

Intl **Portugal, Lisbon**
Ditram Components E Electronics Lta, TEL: 545313

Intl **South Africa, Pinegowrie**
Promilect Ltd., TEL: 011-789-1400

Intl **Spain, Madrid**
Unitronics S.A., TEL: (91) 242-52-04

Intl **Sweden, Malmoe**
Micro Scandia Industriautomation AB, TEL: 040-929000

Intl **Switzerland, Zurich**
Relais-Rohr, TEL: (01) 810 1067

Intl **Taiwan, Taipei**
Sertek Intl., TEL: 7134022

Intl **West Germany, Munchen**
Ernst Rauscher Systemberatung, TEL: 089-878061

Maxim Integrated Products

Maxim Integrated Products
510 N. Pastoria
Sunnyvale, California 94086
408-737-7600

DIPLOMAT
Call Diplomat First For
MAXIM

- San Francisco, CA (408) 734-1900
- Los Angeles, CA (818) 700-8700
- Orange County, CA (714) 549-8401
- San Diego, CA (619) 292-5693
- Salt Lake City, UT (801) 486-4134
- Minneapolis, MN (612) 559-2500
- Denver, CO (303) 422-9229
- Austin, TX (512) 452-5254
- Dallas, TX (214) 980-1888
- Houston, TX (713) 496-4000
- Chicago, IL (312) 595-1000
- Boston, MA (617) 935-6611
- Danbury, CT (203) 797-9674
- Melville, NY (516) 454-6400
- Syracuse, NY (315) 652-5000
- Cherry Hill, NJ (609) 751-0440
- Totowa, NJ (201) 785-1830
- Philadelphia, PA (215) 546-3730
- Columbia, MD (301) 995-1226
- Atlanta, GA (404) 449-4133
- Clearwater, FL (813) 443-4514
- Fort Lauderdale, FL (305) 974-8700

DIPLOMAT ELECTRONICS CORPORATION

Micra Corporation

Micra Corporation
120 Ricefield Lane
Hauppauge, New York 11788
516-231-8600

Micrel

Micrel
1235 Midas Way
Sunnyvale, California 94086
408-245-2500
TWX: 910-379-0007

MCE

MCE Semiconductor
1111 Fairfield Drive
W. Palm Beach, Florida 33407
305-845-2837
TELEX: 513463 (MCE NPAB)

Sales Office & Representatives

Intl **United Kingdom, Tewkesbury**
MCE, Ltd., TEL: 0684-297777

Intl **West Germany, Munich**
MCE Micro-Circuit Engrg. Vertr. GmbH, TEL: 089-463085

MCE (Cont)

Intl	**West Germany, Nuernberg**	MCE Micro-Circuit Engrg. Vertr. GmbH, TEL: 0911-533933

Mentor Graphics

Mentor Graphics Corporation
8500 S.W. Creekside Pl.
Beaverton, Oregon 97005-7191
503-626-7000
TELEX: 474 2102 Mentor

Specific product information:
Gerry Langler

Meta-Software

Meta-Software Semiconductor Software and Consulting Services
50 Curtner Avenue Suite 16
Campbell, California 95008
408-371-5100
TELEX: 9103504928

Specific product information:
Main Office
Application engineering:
Main Office
Literature:
Main Office
Price and delivery:
Main Office
Place an order:
Main Office
Follow-up an order:
Main Office
All other information:
Main Office

Metheus-CV

Metheus-CV Inc.
5510 NE Elam Young Pkwy. P.O. Box 959
Hillsboro, Oregon 97124
503-640-3311
800-225-5628

Specific product information:
Ken Vartanian

Microbar Systems

Microbar Systems Inc.
785 Lucerne Drive
Sunnyvale, California 94086
408-720-9300
TWX: 910-373-2047

Microcircuits Technology

(See Sahni Corporation)

Micro Computer Control

Micro Computer Control
P.O. Box 275
Hopewell, New Jersey 08525
609-466-1751

Microcomputer Systems

Microcomputer Systems Inc.
1814 Ryder Drive
Baton Rouge, Louisiana 70808
504-769-2154

Micro Industries Corp.

Micro Industries Corp.
691 Greencrest Drive
Westerville, Ohio 43081
614-895-0404

Microdesigns

Microdesigns, Inc.
1874 Forge Street
Tucker, Georgia 30084
404-493-6318

Micro Linear

Micro Linear
2092 Concourse Dr.
San Jose, California 95131
408-262-5200

Microlog, Inc.

Microlog, Inc.
222 Route 59
Suffern, New York 10901
914-357-8086

Micro Networks

Micro Networks Company
324 Clark Street
Worcester, Massachusetts 01606
617-852-5400
TELEX: 951808
TWX: 710-340-0067

Specific product information:
Russ Mullet .... Ext. 208
Application engineering:
Lisa Bicknell .... Ext. 301
Literature:
Maria Connor .... Ext. 228
Price and delivery:
Martha Cheesman .... Ext. 253
Follow-up an order:
Ruth Esteves .... Ext. 222
All other information:
Jim Segre .... Ext. 225

Sales Office & Representatives

AZ	**Mesa**	Sedco Sales, Inc., 602-835-6261
CA	**La Mirada**	Select Elctrns., 714-739-8891
CA	**San Diego**	Bestronics, 619-693-1111
CA	**Santa Ana**	Micro Networks, 714-261-5044
CA	**Santa Clara**	Nes Inc., 408-980-1950
CO	**Golden**	Candal Inc., 303-233-0155
FL	**Delray Beach**	C M Marketing Inc., 305-496-0165
FL	**Largo**	C M Marketing Inc., 813-585-7841
FL	**Orlando**	C M Marketing Inc., 305-841-7423
GA	**Greenville**	Electronic Marketing Assoc. Inc., 803-233-4637
IL	**Glendale Heights**	Beta Technology Sales, 312-790-9886
KS	**Olathe**	Rush & West Assoc., 913-764-2700
MD	**Lutherville**	Walker-Houck Assoc., 301-296-6021
MA	**Lexington**	John E. Boeing, Inc., 617-862-2500
MA	**Worcester**	Micro Networks, 617-852-5400
MN	**Eden Prairie**	Aldridge and Associates, 612-944-8443
MO	**Ballwin**	Rush & West Assocs., 314-394-7271
NY	**East Syracuse**	Nycom, Inc., 315-437-8343
NY	**Jamaica**	S-J Sales Assocs., 718-291-3232
OH	**Cincinnati**	Makin & Assocs., 513-871-2424
OR	**Portland**	Jas. J. Baker Co., 503-297-8744
PA	**Norristown**	Rivco-January, 215-631-1414
SC	**Greenville**	Electronic Marketing Associates Inc., 803-233-4637
TX	**Austin**	Sundance Sales, 512-339-6611
TX	**Dallas**	Micro Networks, 214-991-8566
TX	**Plano**	Sundance Sales, 214-867-0592
WA	**Seattle**	Jas. J. Baker, 206-285-1300
Can	**Oakville, Ontario**	Haltronics, Paltronics Ltd., 416-844-2121
Can	**Ontario, Quebec**	Haltronics, Ltd., 416-844-2233
Intl	**Austria, Bad Voeslau**	Kapla Electronik, TEL: 02252-7459
Intl	**Belgium, Brussels**	Belram S.A., TEL: (32) 34-3332
Intl	**Belgium, Brussels**	I.S.I., TEL: (32) 02-660-1447
Intl	**Denmark, Copenhagen**	Semicap, TEL: (45) 01-221510
Intl	**England, Aylesford, Maidstone**	Candy Electronics Components, TEL: (44) 0622-70774
Intl	**Federal Rep. of Germany**	Emtron, TEL: 49 (6152) 6003
Intl	**Finland, Helsinki**	Turion OY, TEL: (358) 0-377787
Intl	**France, Cedex**	Microel, TEL: 6-9070824
Intl	**Hong Kong, Wan Chai**	Electronic Scientific Engineering Ltd., TEL: 5-745611
Intl	**India, Madras**	Kryonix, TEL: 63805
Intl	**Israel, Bnei Brak**	Electrondart Ltd., TEL: (972) 3-782460
Intl	**Italy, Milano**	L. P. Instruments, TEL: (02) 2719469
Intl	**Japan, Tokyo**	Internix, TEL: (81) 3-369-1101
Intl	**Korea, Seoul**	Han Sun Intl., TEL: (82) 28-0958
Intl	**Netherlands, Breda**	Intelligent Systems BV, TEL: (31) 76-224182
Intl	**Norway, Oslo**	Eltron, TEL: 02-500650
Intl	**South Africa, Bryanston**	S'Electronics, TEL: (27) 48-4718

Micro Networks (Cont)

Intl **Spain, Barcelona**
Monolitic, TEL: (3) 3474155
Intl **Sweden, Bromma**
Scancopter, TEL: (46) 82 89425
Intl **Switzerland, Zurich**
Telemeter AG, TEL: (41) 01-202-7872
Intl **Taiwan, Taipei**
Tai I Trading Co., Ltd., TEL: 8862-704-6335

Micropac

Micropac Industries, Inc.
905 East Walnut Street
Garland, Texas 75040
214-272-3571
TWX: 910-860-5186
All other information:
Ext. 23, 37

Sales Office & Representatives

Intl **Austria, Wien**
Transistor Vertriebs, TEL: 0043/222829451
Intl **Belgium, Brussels**
Manudax, TEL: 00322/22152500
Intl **Denmark, Copenhagen**
Semicap, TEL: 00451/221510
Intl **England, Harrold-Bedford**
Synchro Svcs., TEL: 0044/234720575
Intl **England, Thame-Oxford**
Gain Elctrns., TEL: 0044/844215477
Intl **France, Boulogne**
ASAP, TEL: 00331/6047878
Intl **France, Paris**
Comptoir Commercial D'Importation (CCI),
TEL: 00331/2362045
Intl **Italy, Milano**
El Pack S.R.I., TEL: 00392/6471673
Intl **Netherlands, Nijmegen**
Varilec B.V., TEL: 00318/0445660
Intl **Norway, Tonsbert**
UMI A.S., TEL: 004733/22214
Intl **Sweden, Solna**
AB Betoma, TEL: 00468/820280
Intl **Switzerland, Baden**
Comeltec AG, TEL: 004156/223152
Intl **Switzerland, Zurich**
Egli, Fischer Co. Ltd., TEL: 00411/2020234
Intl **West Germany, Geesthacht**
Microlec, TEL: 04152/72324
Intl **West Germany, Homberg**
IV Elctrn., TEL: 06172/23061
Intl **West Germany, Munich**
DIPL-Ing. Ernst Fey Nachf, TEL: 089-184041
Intl **West Germany, Munich**
Neumueller GmbH, TEL: 089/61181
Intl **West Germany, Munich**
Nucletron Vertriebs GmbH, TEL: 089/146081
Intl **West Germany, Stuttgart**
Ditronic GmbH, TEL: 0711/724844

Micro Power Systems

Micro Power Systems, Inc.
3100 Alfred Street
Santa Clara, California 95050
408-727-5350
TWX: 910-338-0154
Specific product information:
Standard Products Division .... ext. 237
Literature:
Standard Products Division .... ext. 237

Sales Office & Representatives

AL **Huntsville**
R.W. Mitscher Co., Inc., 205-882-6050
AZ **Tempe**
Sun West Mktg. Assoc., 602-838-7586
CA **Irvine**
Centaur Corp, 714-261-2123
CA **Los Gatos**
Pro Assocs, 408-358-3861
CA **Spring Valley**
Centaur Corp, 619-589-8060
CA **Woodland Hills**
Centaur Corp, 818-704-1655
CO **Aurora**
Electrodyne, 303-695-8903
FL **Clearwater Beach**
Perrott Assocs., Inc., 810-866-0328
FL **Orlando**
Perrott Assoc, 305-298-7748
FL **Orlando**
Perrott Assocs., Inc., 305-841-1878
FL **Sunrise**
Perrott Assoc, 305-792-2211
GA **Lawrenceville**
R.W. Mitscher Co., Inc., 404-923-3239
IL **Arlington Heights**
Pheonix Electronic Sales, 312-394-4422
IN **Ft. Wayne**
Coombs Assocs., 219-747-7661
KY **Louisville**
K.W. Elctrn. Sales, 502-451-1860
MD **Baltimore**
Burgin-Kreh Assoc, 301-265-8500
MA **Burlington**
Dynamic Sales of New England, 617-272-5676
MI **Novi**
Techrep Saranac, 616-642-6594
MN **Edina**
P K Sales, 612-944-0030
MO **St. Louis**
Rothkopf & Assoc, 314-961-4485
NJ **Parsippany**
HLM, 201-263-1535
NY **Buffalo**
Quality Comps, 716-837-5430
NY **Manculs**
Quality Comps, 315-682-8885
NY **Northport**
HLM, 516-757-1606
NC **Raleigh**
R.W. Mitscher Company, 919-848-0941
OH **Dayton**
K.W. Elctrn. Sales, Inc., 513-890-2150
OH **Shaker Heights**
K.W. Elctrn. Sales, Inc., 216-491-9177
OH **Worthington**
K.W. Electronic Sales, Inc., 614-888-0483
OR **Tigard**
Elctrn. Comp. Sales, 503-245-2352
PA **Allison Park**
K.W. Electronic Sales, Inc., 412-487-4300
PA **Norristown**
Rivco January, 215-631-1414
TN **Johnson City**
R.W. Mitscher Co., Inc., 615-292-7258
TX **Austin**
Mil Rep Assoc, 512-258-2828
TX **Houston**
Mil Rep Assoc, 713-937-0127
TX **Richardson**
Mil Rep Assoc, 214-644-6731
UT **Salt Lake City**
Electrodyne, 801-486-3801
VA **Lynchburg**
Burgin-Kren Assoc, 804-239-2626
WA **Mercer Island**
Elctrn. Comp. Sales, 206-232-9301
Can **Ontario**
Har-Tech Elctrns, 514-665-7773
Can **Quebec**
Har-Tech Elctrns, 514-697-6731
Can **Vancouver, B.C.**
Davetek Mktg, 603-430-3680
Intl **England, (UK) Surrey**
Micro Power Systems, TEL: 09-325-7315
Intl **France, Villebon Les Ulis**
Micro Power Systems, TEL: 33-6-928-3131
Intl **Japan, KK Kawagana**
Micro Power Systems, TEL: 0462-24-0106
Intl **West Germany, Graefelfing**
Micro Power Systems, TEL: 49-898-52016

Distributors

AL **Huntsville**
Marshall Elect., 205-881-9235
AL **Huntsville**
Wyle Lab., 205-837-4411
AZ **Phoenix**
Wyle Lab, 602-249-2232
AZ **Tempe**
Marshall Elctrns., 602-968-6181
CA **Anaheim**
Pacesetter Elctrns., 714-777-4711
CA **Canoga Park**
Marshall Electronics, 213-999-5001
CA **El Monte**
Marshall Electronics, 818-442-7204
CA **El Segundo**
Wyle Laboratories, 213-322-1763
CA **Irvine**
Marshall Electronics, 714-556-6400
CA **Irvine**
Wyle Laboratories, 714-863-9953
CA **Los Angeles**
Wyle Laboratories, 213-322-8100
CA **Milpitas**
Marshall Electronics, 408-943-4700
CA **Reseda**
Jan Devices, 818-708-1100
CA **San Diego**
Marshall Electronics, 619-578-9600
CA **San Diego**
Wyle Laboratories, 619-565-9171
CA **San Jose**
Future Elctrns., 408-945-9100
CA **Santa Clara**
Wyle Laboratories, 408-727-2500
CA **Sunnyvale**
Pacesetter Elctrns., 408-734-5470
CO **Denver**
Marshall Electronics, 303-427-1818
CO **Thornton**
Wyle Laboratories, 303-457-9953
CO **Wheatridge**
Bell Inds., 303-424-1985
CT **Orange**
Milgray Elect., 203-795-0711
CT **Wallingford**
Marshall Elect., 203-265-3822
FL **Longwood**
CAM/RPC, 305-834-2031
FL **Miami**
All American, 305-621-8282
FL **Orlando**
Chip Supply Company, 305-298-7100
FL **Orlando**
Marshall Elctrns., 305-841-1878
FL **Winter Park**
Milgray Elect., 305-647-5747
GA **Atlanta**
Milgray Elect., 404-393-9666
GA **Norcross**
Marshall Elect., 404-923-5750
IL **Northbrook**
Classic Components, 312-272-9650
IL **Schaumberg**
Marshall Elect., 312-490-0155

Micro Power Systems (Cont)

KS	**Indianapolis** Classic Components, 317-872-4777
KS	**Lenexa** Marshall Electrns., 913-492-3121
KS	**Overland Park** Milgray Elect., 913-236-8800
MD	**Baltimore** Whitney Distrs., 301-944-8080
MD	**Gaithersberg** Marshall Elect., 301-840-9450
MD	**Rochville** Milgray Elect., 301-244-8165
MA	**Burlington** Marshall Elect., 617-272-8200
MA	**Burlington** Milgray Elect., 617-272-6800
MA	**Norwood** Gerber Elect., 617-769-6000
MA	**Wilmington** Aved Elctrns., Inc., 617-657-8310
MI	**Livonia** Marshall Elect., 313-525-5850
MN	**Minneapolis** The Joel Co., 612-935-6202
MN	**Plymouth** Marshall Elect, 619-559-2211
NJ	**Fairfield** Marshall Elect., 201-882-0320
NJ	**Malton** Milgray Elect., 609-983-5030
NJ	**Mt. Laurel** Marshall Elect., 609-234-9100
NJ	**Parsippany** ACI Electronics, 800-225-0130
NM	**Albuquerque** Alliance Elec., 505-292-3360
NY	**Endwell** Marshall Elect., 607-798-1611
NY	**Farmingdale** Milgray Elect., 276-420-9800
NY	**Farmingdale** Nu Horizons, 516-694-2500
NY	**Hauppauge, L.I.** Marshall Elect., 516-273-2424
NY	**Pittsford** Milgray Elect., 716-385-9330
NY	**Rochester** Marshall Elect., 716-235-7620
NC	**Raleigh** Marshall Elect., 919-878-9882
OH	**Cleveland** CAM/RPC Electronics, 216-461-4700
OH	**Cleveland** Milgray Elect, 216-447-1520
OH	**Dayton** Marshall Elect., 513-236-8088
OH	**Englewood** Argent Inds., 513-836-8633
OH	**Solon** REH Elctrns., 216-248-1636
OK	**Tulsa** Quality Components, 918-664-8812
OR	**Beaverton** Marshall Electronics, 503-644-5050
OR	**Hillsboro** Wyle Laboratories, 503-640-6000
PA	**Pittsburgh** CAM/RPC, 412-782-3770
TX	**Addison** Quality Comps., Inc., 214-733-4300
TX	**Austin** Marshall Electronics, 512-458-5654
TX	**Austin** Quality Comps., Inc., 512-835-0220
TX	**Austin** Wyle Laboratories, 512-834-9957
TX	**Dallas** Marshall Electronics, 214-233-5200
TX	**Houston** Marshall Electronics, 713-789-6600
TX	**Richardson** Wyle Laboratories, 214-235-9953
TX	**Sugarland** Quality Comps., Inc., 713-240-2255
UT	**Salt Lake City** Bell Industries, 801-972-6969
UT	**Salt Lake City** Wyle, 801-974-9953
WA	**Bellevue** Marshall Electronics, 206-737-9100
WA	**Bellevue** Wyle Laboratories, 206-453-8300
WA	**Kirkland** Robert E. Priebe Co., 206-821-4695
WI	**New Berlin** Classic Components, 414-786-5300
Can	**Alberta** Future Elect., 403-486-0S74
Can	**Ontario** Future Elect., 613-820-8313
Can	**Quebec** Future Elect., 514-694-7710
Can	**Vancouver, B.C.** Future Elect., 604-438-5545
Intl	**Australia, Rozelle** Ampec Elctrns., TEL: (02) 818-1166
Intl	**Austria, Vienna** NANO-80, TEL: 43 (0222) 651522
Intl	**Belgium, Brussels** Betea S.A./N.V., TEL: 011-32-02-736-8050
Intl	**Belgium, Zaventem** Micro Power Systems, TEL: 011-32-2-7204608
Intl	**Denmark, Copenhagen** Advanced Elctrns. of Denmark Aps, TEL: 011-45-1-194433
Intl	**England** MDL Components, Ltd., TEL: 011-44-0202-681331
Intl	**England** Quarndon Electronics Ltd, TEL: 011-44-0332-32651
Intl	**England, Essex** Pronto Elctrn. Sys., Ltd., TEL: 011-44-599-3041/2
Intl	**England, Sussex** Hartech, TEL: 011-44-243-773511
Intl	**Finland, Helsinki** Micronas, TEL: 011-358-0-5623-977
Intl	**France, Gentilly** Radio Television Francaise, TEL: 011-33-1-664-1101
Intl	**France, Le Chesnay** A2M, TEL: 011-33-3-954-9113
Intl	**Holland, Zoetermeer** Tekelec Airtronic, TEL: 011-31-079-310100
Intl	**Hong Kong, Central** Rikei Corp., TEL: 5-450511
Intl	**Israel, Tel Aviv** STG Intl. Ltd., TEL: 011-972-248-231
Intl	**Italy, Milano** Tekelec Airtronic, TEL: 011-3902-7380641
Intl	**Italy, Torino** Inter-Rep, TEL: 011-001-261-59
Intl	**Japan, Kitakyushu City** A.N.M. Co., Ltd., TEL: 093-618-3371
Intl	**Japan, Osaka** Maruei Sangyo Inc., TEL: 06-761-4171
Intl	**Japan, Tokyo** Internix, Inc., TEL: 03-369-1105
Intl	**Japan, Tokyo** Kaigai Elctrns., TEL: 011-81586-0471
Intl	**Japan, Tokyo** MCM Corporation, TEL: 03-705-5611
Intl	**Japan, Tokyo** Micron, Inc., TEL: 03-356-5541
Intl	**Japan, Tokyo** Okura Electronics Co., Ltd., TEL: 03-566-6291-3
Intl	**Japan, Tokyo** Rikei Corporation, TEL: 03-345-1411
Intl	**Japan, Tokyo** Systems Marketing, TEL: 03-254-2751
Intl	**Japan, Tokyo** Tomen Electronics Corp., TEL: 03-506-3471
Intl	**Kowloon, Hong Kong** Triatomic Enterprises, TEL: 3-880151-2
Intl	**Netherlands, Haaften** Techmation, TEL: 011-04189-2222
Intl	**Norway, Hvalstad** Estronic, TEL: 011-4702-786010
Intl	**Seoul, Korea** Hanaro Corp., TEL: 02-782-0147
Intl	**Singapore** Caltron LTD., TEL: 4567222
Intl	**South Africa, Ranburg** South Continental Devices, TEL: (011) 27798-2400
Intl	**Spain, Barcelona** Venco Electronica SA, TEL: 011-34-3-330-9751, 230-0205
Intl	**Sweden, Danderyd** Setron AB, TEL: 011-460-753-0055
Intl	**Switzerland, Schweiz** Anatec AG, TEL: 011 41 (042) 367633
Intl	**Taiwan, Taipei** Helm Engineering & Trading, TEL: 011-886-02-709-1888
Intl	**West Germany, Hamburg** Electronica
Intl	**West Germany, Hohenbrun** Airtron, TEL: 011-49-89-081021
Intl	**West Germany, Munich** Kontron Elecktronik GmbH, TEL: 011-49-89-31901-375
Intl	**West Germany, Munich** Tekelec Airtronic, TEL: 011-49-89-594153

Micro-Rel

Micro-Rel
2343 W. 10th Place
Tempe, Arizona 85281
602-968-6411

Sales Office & Representatives

CA	**Reseda** Jan Devices, 818-708-1100
CO	**Golden** Candal, Inc., 303-233-0155
CT	**Madison** United Components, 203-245-4810
FL	**Orlando** Gra-Mar Inc., 305-894-3351
MN	**Minneapolis** Peterson & Associates, 612-944-0030
NY	**Clark Mills** KLM Garner, Inc., 315-853-6126
NY	**Hauppauge** Masin Esco, Inc., 516-273-3500
OH	**Dayton** Electro Sales Associates, 513-426-5551
TX	**Richardson** Interactive Component Sales, Inc., 214-669-4031

Micro Sciences

Micro Sciences Corporation
145 Commack Road
Commack,, New York 11725
516-499-0635

Micron Technology

Micron Technology
2805 E. Columbia Road
Boise, Idaho 83706
208-383-4000
TWX: 910-970-5973

Microsim

Microsim
23175 La Cadena Dr.
Laguna Hills, California 92653
714-770-3022

MICRO/SYS

MICRO/SYS
1011 Grand Central Avenue
Glendale, California 91201-3010
818-244-4600

Mikros Systems Corp.

Mikros Systems Corp.
3828 Quakerbridge Road
Mercerville, New Jersey 08619

MilerTronics

MilerTronics
303 Airport Road
Greenville, South Carolina 29607
803-242-9232

Miller Technology

Miller Technology Inc.
647 North Santa Cruz Avenue
Los Gatos, California 95030
408-395-2032

Mitchell Electronics

Mitchell Electronics
Route 6 Box 8
Athens, Ohio 45701
614-594-8532

Mitel Corp.

Mitel Semiconductor
P.O. Box 13320
Kanata, Ontario, Canada K2K 1X5
613-592-5630
TELEX: 053-3221
TWX: 610-562-8529

Specific product information:
Sales Office
Application engineering:
Head Office
Literature:
Sales Office
Price and delivery:
Sales/Distributor Office
Place an order:
Customer Service
Follow-up an order:
Customer Service
All other information:
Sales Office

Sales Office & Representatives

Intl **Argentina, Buenos Aires**
YEL S.R.L., TEL: 46-2211
Intl **Australia, Sydney**
Benmar Intl. Pty. Ltd., TEL: (02) 233-7939
Intl **Denmark, Copenhagen**
Advanced Eltrn. of Denmark APS, TEL: 451 19 44 33
Intl **Denmark, Copenhagen**
Mitel Semiconductor, TEL: 01 612566
Intl **France, Levallois-Perret**
Technology Resources SA, TEL: 33 (1) 757 3133
Intl **Germany, Munchen**
Atlantik Elektronik GmbH, TEL: 49-89-8572086
Intl **Hong Kong, Kowloon**
Chinam Associates, TEL: 3-7441186
Intl **Hong Kong, Kowloon**
Draco Intl. Ltd., TEL: 3-692778, 3-446117
Intl **Hong Kong, Tsuen Wan**
Mitel (Asia) Ltd., TEL: 0-4636-41
Intl **Israel, Herzlia**
Vectronics, TEL: 972 (052) 556-070
Intl **Italy, Milan**
Mitel Telecom Ltd., TEL: 02-824-5222/5177
Intl **Japan, Tokyo**
Tokyo Electron Ltd., TEL: 03-343-4411
Intl **Korea, Seoul**
Duksung Trading Co., TEL: 854-5047-5831
Intl **New Zealand, Auckland**
G.T.S. Engrg. Ltd., TEL: 456-745, 543, 214
Intl **South Africa, Pinegowrie**
Promilect (PTY) Ltd., TEL: 27-11 789-1400
Intl **South Wales, Gwent**
Mitel Semiconductor, TEL: 0291-423355
Intl **Spain, Madrid**
Compania Electronica, TEL: 34-754-30 01/77, 754-30-77
Intl **Switzerland, Zurich**
EGLI Fischer & Co., TEL: 41 (01) 202 02 34
Intl **Taiwan, Taipei**
Fairply Enterprises, TEL: 537-4802, 541-6135/6133
Intl **United Kingdom, Essex**
Pronto Elctrns. Sys., TEL: 441-554-6222
Intl **West Germany**
Mitel Semiconductor, TEL: 010-49-711-7701522

Distributors

Intl **Argentina, Buenos Aires**
YEL S.R.L., TEL: 46-2211
Intl **Australia, Sydney**
Benmar Intl. Pty. Ltd., TEL: (02) 233-7939
Intl **Austria Wien**
Codico GmbH & Co. Kg., TEL: 43-222 862428
Intl **Denmark**
Mitel Semiconductor, TEL: 01-612566
Intl **Denmark, Copenhagen**
Advanced Electronic of Denmark APS, TEL: 451 19 44 33
Intl **England, Bedford**
Online Distribution Ltd., TEL: 44 234 217981
Intl **France, Levallois-Perret**
Technology Resources SA, TEL: 33 (1) 757-3133
Intl **Germany, Munich**
Atlantik Elektronik GmbH, TEL: 49-89-857-2086
Intl **Holland, Den Haag**
Telecomponents Benelux BV, TEL: 31 70 631902
Intl **Hong Kong, Kowloon**
Chinam Associates, TEL: 3-744-1186
Intl **Hong Kong, Kowloon**
Draco Intl Ltd., TEL: 3-692778, 3-446117
Intl **Ireland, Dublin**
Electronics 2000 Ltd., TEL: 44-494 444044
Intl **Israel, Herzlia**
Vectronics, TEL: 972 (052) 556-070
Intl **Italy, Milan**
Celte S.R.L., TEL: 39 2 296295/296960, 39 2 2366005/2365352
Intl **Japan, Tokyo**
Tokyo Electron Ltd., TEL: 03-343-4411
Intl **Korea, Seoul**
Dunsung Trading Co., TEL: 854-5047/5831
Intl **New Zealand, Auckland**
G. T. S. Engineering Ltd., TEL: 456-745/543/214
Intl **South Africa, Pinegowrie**
Promilect (PTY) Ltd., TEL: 27 11 789-1400
Intl **Spain, Madrid**
Compania Electronica, TEL: 34-754-30 01/77
Intl **Sweden, Tyreso**
Teleinnovation AB, TEL: 46 8 7575623
Intl **Switzerland, Zurich**
EGLI Fischer & Co., TEL: 41 (01) 202 02 34
Intl **Taiwan, Taipei**
Fairply Enterprises, TEL: 537-4802, 541-6135/6133
Intl **Turkey, Istanbul**
Barkey Sanay; Malzemeler; Temsilcilik Ltd., St., TEL: 90 11 489000
Intl **United Kingdom, Essex**
Pronto Elctrns. Sys., TEL: 44-01-554-6222

Mitsubishi Electronics

Mitsubishi Electronics America, Inc.
Semiconductor Division
1050 East Arques Avenue
Sunnyvale, California 94086
408-730-5900
TELEX: 172296 MELA SUVL.
TWX: 910-339-9549

Monolithic Memories

Monolithic Memories, Inc.
2175 Mission College Blvd.
Santa Clara, California 95054
408-970-9700

Sales Office & Representatives

AL **Huntsville**
REP, Inc., 205-881-9270
AZ **Phoenix**
Monolithic Memories, 602-971-7997
AZ **Scottsdale**
Summit Sales, 602-998-4850
CA **Canoga Park**
Bager Electronics, 818-712-0011
CA **Canoga Park**
Monolithic Memories, 818-341-7257
CA **Cupertino**
Thresum Assocs., 408-996-9889
CA **Fountain Valley**
Bager Elctrns., 714-957-3367
CA **San Diego**
Littlefield & Smith, 619-455-0055
CA **San Jose**
Monolithic Memories, 408-249-7766
CA **Santa Ana**
Monolithic Memories, 714-543-8664
CA **Santa Clara**
Criterion, 408-988-6300
CO **Parker**
Monolithic Memories, 303-690-3433
CO **Wheatridge**
Waugaman Assocs., 303-423-1020

Monolithic Memories (Cont)

CT	**North Haven**	Comp Rep Assocs., 203-239-9762
CT	**Wallingford**	Comp Rep Associates, 203-269-1145
FL	**Clearwater**	Dyne-A-Mark, 813-441-4702
FL	**Fort Lauderdale**	Dyne-A-Mark, 305-771-6501
FL	**Maitland**	Dyne-A-Mark, 305-629-5039
FL	**Palm Bay**	Dyne-A-Mark, 305-727-0192
GA	**Norcross**	Monolithic Memories, 404-447-4119
GA	**Tucker**	Rep, Inc., 404-938-4358
IL	**Naperville**	Monolithic Memories, 312-961-9200
IL	**Rolling Meadows**	Sumer, 312-991-8500
IN	**Indianapolis**	DeVoe Company, 317-842-3245
IA	**Cedar Rapids**	S & O Sales, 319-393-1845
KS	**Olathe**	Rush & West, 913-764-2700
MD	**Baltimore**	Conroy Sales, 301-296-2444
MA	**Framingham**	Monolithic Memories, 617-875-7373
MA	**Westwood**	Comp Rep Associates, 617-329-3454
MA	**Westwood**	Comp Rep Assocs., 617-329-3454
MI	**Grosse Point**	Greiner Assocs., 313-499-0188
MN	**Edina**	Mel Foster Technical Sales, 612-941-9790
MN	**Edina**	Monolithic Memories, 612-922-2260
MO	**Ballwin**	Rush & West, 314-394-7271
NJ	**Cherry Hill**	Monolithic Memories, 609-751-1288
NJ	**Haddonfield**	Tritek Sales, 609-429-1551
NJ	**Sussex**	Monolithic Memories, 201-875-9430
NJ	**Teaneck**	R. T. Reid Assoc., 201-692-0200
NJ	**Vincentown**	Monolithic Memories, 609-268-0064
NM	**Albuquerque**	BFA Corp., 505-292-1212
NY	**E. Rochester**	Tri-Tech Electronics, 716-385-6500
NY	**Endwell**	Tri-Tech Electronics, 607-754-1094
NY	**Fayetteville**	Tri-Tech Electronics, 315-446-2881
NY	**Fishkill**	Tri-Tech Electronics, 914-897-5611
NY	**Melville**	R.T. Reid Assocs., 516-351-8833
NC	**Charlotte**	Rep Inc., 704-563-5554
NC	**Raleigh**	Rep, Inc., 919-851-3007
OH	**Cincinnati**	Makin Assocs., 513-871-2424
OH	**Columbus**	Makin Assocs., 614-581-8898
OH	**Dayton**	Monolithic Memories, 513-439-0470;513-866-8928
OH	**Solon**	Makin Assocs., 216-248-7370
OK	**Tulsa**	West Assocs., 918-665-3465
OR	**Medford**	Monolithic Memories, 503-779-8945
OR	**Portland**	N. W. Mktg., 503-620-0441
TN	**Jefferson City**	Rep, Inc., 615-475-9012
TX	**Austin**	West Assocs., 512-454-3681
TX	**Dallas**	Monolithic Memories, 214-690-3812
TX	**Dallas**	West Assocs., 214-248-7060
TX	**Houston**	West Assocs., 713-777-4108
UT	**Salt Lake City**	Waugaman Assocs., 801-261-0802
WA	**Bellevue**	Northwest Mktg., 206-455-5846
WA	**Blaine**	Davetek Marketing, 604-430-3680
WI	**Brookfield**	Sumer, 414-784-6641
Can	**Brampton, Ontario**	Cantec, 416-791-5922
Can	**Dollard Des Ormeaux, Quebec**	Cantec, 514-683-6131
Can	**Ottawa, Ontario**	Cantec, 613-725-3704
Intl	**England, London**	Malcom Singer, TEL: 1-405-4698
Intl	**Singapore, Poh**	MMI Integrated Circuits, TEL: 65-225-7544
PR	**Mayaguez**	Comp Rep Assocs., 809-832-9529

Distributors

AL	**Huntsville**	Marshall Elctrns., 205-881-9235
AZ	**Phoenix**	Kierulff Elctrns., 602-437-0750
AZ	**Tempe**	Anthem Elctrns., 602-966-6600
AZ	**Tempe**	Bell Inds., 602-966-7800
AZ	**Tempe**	Marshall Elctrns., 602-968-6181
CA	**Agoura**	Image Electronics, 818-707-0911
CA	**Campbell**	Micro Aids Intl., 408-446-3868
CA	**Canoga Park**	Marshall Elctrns., 818-509-0001
CA	**Chatsworth**	Anthem Electronics, 818-700-1000
CA	**Chatsworth**	Arrow Elctrns., 818-701-7500
CA	**Cypress**	Kierulff Electronics, 714-220-6566
CA	**El Monte**	Marshall Elctrns., 818-442-7204
CA	**El Monte**	Marshall Electronics, 818-442-7204
CA	**Hayward**	Arrow Electronics, 415-487-4600
CA	**Irvine**	Anthem Electronics, 714-768-4444
CA	**Irvine**	Marshall Elctrns., 714-660-0951
CA	**Los Angeles**	Kierulff Elctrns., 213-725-0325
CA	**Milpitas**	Marshall Elctrns., 408-943-4600
CA	**Rancho Cordova**	Marshall Electronics, 916-635-9700
CA	**Sacramento**	Anthem Electronics, 916-922-6800
CA	**Sacramento**	Arrow Elctrns., 916-925-7456
CA	**San Diego**	Anthem Elctrns., 619-279-5200
CA	**San Diego**	Arrow Elctrns., 619-565-4800
CA	**San Diego**	Arrow Electronics, 619-565-4800
CA	**San Diego**	Kierulff Elctrns., 619-278-2112
CA	**San Diego**	Kierulff Electronics, 619-278-2112
CA	**San Jose**	Anthem Elctrns., 408-295-4200
CA	**San Jose**	Kierulff Electronics, 408-971-2600
CA	**Sunnyvale**	Arrow Elctrns., 408-745-6600
CA	**Sunnyvale**	Keysoure, 408-730-0607
CA	**Sunnyvale**	Multitech Electronics, 408-773-8400
CA	**Tustin**	Arrow Elctrns., 714-838-5422
CA	**Tustin**	Image Elctrns., 714-730-0303
CA	**Tustin**	Kierulff Elctrns., 714-731-5711
CO	**Aurora**	Arrow Elctrns., 303-696-1111
CO	**Englewood**	Anthem Electronics, 303-790-4500
CO	**Englewood**	Kierulff Elctrns., 303-790-4444
CO	**Wheatridge**	Bell Inds., 303-424-1985
CT	**Meriden**	Lionex, 203-237-2282
CT	**Wallingford**	Arrow Elctrns., 203-265-7741
CT	**Wallingford**	Kierulff Electrns., 203-265-1115
CT	**Wallingford**	Marshall Elctrns., 203-265-3822
FL	**Deerfield**	Arrow Elctrns., 305-429-8200
FL	**Ft. Lauderdale**	Kierulff Elctrns., 305-486-4004
FL	**Ft. Lauderdale**	Marshall Electronics, 305-928-0661
FL	**Orlando**	Marshall Elctrns., 305-841-1878
FL	**Palm Bay**	Arrow Elctrns., 305-725-1480
FL	**Palm Bay**	Arrow Electronics, 305-725-1480
FL	**St. Petersburg**	Kierulff Elctrns., 813-576-1966
GA	**Norcross**	Arrow Elctrns., 404-449-8252
GA	**Norcross**	Kierulff Electrns., 404-447-5252
GA	**Norcross**	Marshall Elctrns., 404-923-5750
IL	**Itasca**	Kierulff Elctrns., 312-250-0500
IL	**Schaumberg**	Marshall Elctrns., 312-490-0155
IL	**Schaumburg**	Arrow Elctrns., 312-397-3440
IN	**Indianapolis**	Arrow Elctrns., 317-243-9353
IA	**Cedar Rapids**	Advent Elctrns., 319-363-0221
KS	**Lenexa**	Marshall Electronics, 913-492-3121
MD	**Columbia**	Arrow Elctrns., 301-995-0003
MD	**Columbia**	Lionex Corp., 301-964-0040
MD	**Gaithersburg**	Marshall Electronics, 301-840-9450
MD	**Linthicum**	Kierulff Electrns., 301-636-5800
MA	**Billerica**	Kierulff Elctrns., 617-667-8331

Monolithic Memories (Cont)

MA	**Burlington**	Marshall Elctrns., 617-272-8200
MA	**Wilmington**	Lionex, 617-657-5170
MA	**Woburn**	Arrow Elctrns., 617-933-8130
MI	**Ann Arbor**	Arrow Elctrns., 313-971-8220
MI	**Grand Rapids**	Arrow Electrns., 616-243-0912
MI	**Grand Rapids**	RS Elctrns., 616-241-3483
MI	**Livonia**	Marshall Elctrns., 313-525-5850
MN	**Edina**	Arrow Elctrns., 612-830-1800
MN	**Edina**	Kierulff Elctrns., 612-941-7500
MN	**Plymouth**	Marshall Electronics, 612-559-2211
MO	**St. Louis**	Arrow Elctrns., 314-567-6888
NH	**Manchester**	Arrow Elctrns., 603-668-6968
NJ	**Clifton**	Vantage Electrns., 201-777-4100
NJ	**Fairfield**	Arrow Elctrns., 201-575-5300
NJ	**Fairfield**	Kierulff Elctrns., 201-575-6750
NJ	**Fairfield**	Lionex, 201-227-7960
NJ	**Fairfield**	Marshall Elctrns., 201-882-0320
NJ	**Marlton**	Arrow Elctrns., 609-596-8000
NJ	**Mt. Laurel**	Kierulff Electronics, 609-235-1444
NJ	**Mt. Laurel**	Marshall Electronics, 609-234-9100
NM	**Albuquerque**	Arrow Elctrns., 505-243-4566
NM	**Albuquerque**	Bell Inds., 505-292-2700
NY	**Buffalo**	Summit Distrs., 716-884-3450
NY	**Hauppauge**	Arrow Elctrns., 516-231-1000
NY	**Hauppauge**	Current Components, 516-273-2600
NY	**Hauppauge**	Current Comps., 516-273-2600
NY	**Hauppauge**	Lionex, 516-273-1660
NY	**Hauppauge**	Lionex, 516-273-1660
NY	**Hauppauge**	Marshall Electronics, 516-273-2424
NY	**Johnson City**	Marshall Elctrns., 607-798-1611
NY	**Liverpool**	Arrow Elctrns., 315-652-1000
NY	**Melville**	Arrow Elctrns., 516-694-6800
NY	**Rochester**	Arrow Elctrns., 716-427-0300
NY	**Rochester**	Marshall Elctrns., 716-235-7620
NY	**Rochester**	Summit Distrs., 716-334-8110
NC	**Raleigh**	Arrow Elctrns., 919-876-3132
NC	**Raleigh**	Kierulff Electronics, 919-872-8410
NC	**Raleigh**	Marshall Elctrns., 919-878-9882
NC	**Raleigh**	Resco Raleigh, 919-781-5700
OH	**Centerville**	Arrow Elctrns., 513-435-5563
OH	**Cleveland**	Kierulff Elctrns., 216-587-6558
OH	**Dayton**	Kierulff Electronics, 513-439-0045
OH	**Dayton**	Marshall Elctrns., 513-236-8088
OH	**Solon**	Arrow Elctrns., 216-248-3990
OH	**Solon**	Marshall Elctrns., 216-248-1788
OK	**Tulsa**	Arrow Electronics, 918-665-7700
OK	**Tulsa**	Kierulff Electronics, 918-252-7537
OK	**Tulsa**	Quality Components, 918-664-8812
OR	**Beaverton**	Almac Elctrns., 503-641-9096
OR	**Lake Oswego**	Anthem Elctrns., 503-684-2661
OR	**Tigard**	Arrow Elctrns., 503-684-1690
PA	**Horsham**	Lionex, 215-443-5150
PA	**Monroeville**	Arrow Elctrns., 412-856-7000
PA	**Monroeville**	Arrow Electronics, 412-856-7000
TX	**Addison**	Quality Comps., 214-733-4300
TX	**Austin**	Arrow Elctrns., 512-835-4180
TX	**Austin**	Kierulff Elctrns., 512-835-2090
TX	**Austin**	Quality Comps., 512-835-0220
TX	**Carrollton**	Arrow Elctrns., 214-380-6464
TX	**Dallas**	Kierulff Elctrns., 214-343-2400
TX	**Dallas**	Marshall Elctrns., 214-233-5200
TX	**Houston**	Arrow Elctrns., 713-530-4700
TX	**Houston**	Kierulff Elctrns., 713-530-7030
TX	**Sugarland**	Quality Comps., 713-491-2255
UT	**Salt Lake City**	Bell Inds., 801-972-6969
UT	**Salt Lake City**	Kierulff Elctrns., 801-973-6913
WA	**Bellevue**	Almac Electronics Corp., 206-643-9992
WA	**Bellevue**	Arrow Elctrns., 206-643-4800
WA	**Bellingame**	RAE Electronics
WA	**Kent**	Kierulff Elctrns., 206-575-4420
WA	**Redmond**	Anthem Electrns., 206-881-0850
WI	**Brookfield**	Arrow Electronics, 414-764-6600
WI	**Waukesha**	Kierulff Elctrns., 414-784-8160
Can	**Barnaby, British Columbia**	RAE Elctrns., 604-291-8866
Can	**Brampton, Ontario**	Zentronics Ltd., 416-451-9600
Can	**Calgary, Alberta**	Zentronics Ltd., 403-230-1422
Can	**Mississauga, Ontario**	Prelco Elctrns., 416-678-0401
Can	**Montreal, PQ**	Cesco, 514-735-5511
Can	**Montreal, Quebec**	Prelco Elctrns., 514-389-8051
Can	**Nepean, Ontario**	Prelco Elctrns., 613-726-1800
Can	**Nepean, Ontario**	Zentronics Ltd., 613-226-8840
Can	**Richmond, British Columbia**	Zentronics Ltd., 604-273-5573
Can	**St. Laurent, Quebec**	Zentronics Ltd., 514-735-5361
Can	**Waterloo, Ontario**	Zentronics Ltd., 519-884-5700
Can	**Winnipeg, Manitoba**	Zentronics Ltd., 204-775-8661
Intl	**Australia, Burwood**	R & D Elctrns. Pty. Ltd., TEL: 613-288-8911
Intl	**Australia, Crows Nest**	R & D Elctrns. Pty. Ltd., TEL: 612-439-5488
Intl	**Belgium, Antwerp**	D & D Electronics, TEL: 03-8277934
Intl	**Denmark, Kokkedal**	C-88, TEL: 2-244888
Intl	**England, Bucks**	Rapid Recall Ltd., TEL: 0494-26271
Intl	**England, Hampshire**	Monolithic Memories Ltd., TEL: 9-011-44-252-517431
Intl	**England, Slough**	Macro Mktg. Ltd., TEL: 06286-4422
Intl	**England, Surrey**	Analog Devices Ltd., TEL: 01-941-1066
Intl	**England, Surrey**	Microlog Ltd., TEL: 048-62-29551
Intl	**Finland, Espoo**	Interument Oy Elektroniikka, TEL: 9-0-5281
Intl	**France, Boulogne**	Datadis S.A., TEL: 33-9-1-6056000
Intl	**France, Choisy-Le-Roi**	Jermyn, TEL: 33-1-8531200
Intl	**France, Le Relecq-Kerhuon**	Bellion-Electronique, TEL: 9-98-28-03-03
Intl	**France, Les Ulis Cedex**	Generim S.A.R.L., TEL: 33-1-9077878
Intl	**France, Paris**	Monolithic Memories France S.A.R.L., TEL: 9-011-46-87-34-62
Intl	**France, Pessac Cedex**	Composants S.A., TEL: 9-56-36-40-40
Intl	**France, Seyssinet**	Generim, TEL: 33-1-76-49-491449
Intl	**France, Toulon**	Dimel, TEL: 94/414963
Intl	**Germany, Muenchen**	Monolithic Memories, GmbH, TEL: 89-984961
Intl	**Germany, Nordlingen**	SES Elctrns. Vertriebb, TEL: 9-011-49-89-984961
Intl	**Holland, Ijssel**	Alcom Electrns. B.V., TEL: 010-519533
Intl	**Hong Kong, Huahsia**	CET Ltd., TEL: 852-5-200922
Intl	**India, Kerala**	Kryonex, TEL: 63805
Intl	**Israel, Tel Aviv**	Telsys Ltd., TEL: 972-8-494891-2
Intl	**Italy, Cin Balsamo**	Comprel S.P.A., TEL: 39-2-612-0641
Intl	**Japan, Osaka**	Nihon Denshikizai Co. Ltd., TEL: (06)-385-6707
Intl	**Japan, Osaka**	Tokiwa & Co Inc. of Osaka, TEL: 6-643-3521
Intl	**Japan, Tokyo**	Comtecs Co. Inc., TEL: (03)-441-7100
Intl	**Japan, Tokyo**	Internix Inc., TEL: 03 369-1101
Intl	**Japan, Tokyo**	K. Tokiwa & Co., TEL: 03 766-6701
Intl	**Japan, Tokyo**	Monolithic Memories Japan KK, TEL: 9-011-81-3-207-3131
Intl	**Japan, Tokyo**	Synerdine Inc., TEL: 03 461-9311
Intl	**Japan, Tokyo**	Tokyo Denshi Kagaku Kizai, TEL: 3-257-1361

Monolithic Memories (Cont)

Intl	**Norway, Oslo** Henaco A/S, TEL: 02-162110
Intl	**Portugal, Pero Pinheiro** Digicontrole, TEL: 35-1-292-3924
Intl	**San Jose, CA** Multitech Intl. Corp., TEL: 408-773-8400
Intl	**Seoul, Korea** Kortronics Enterprise, TEL: 635-1043
Intl	**Singapore, Kolam Ayer** Dynamar International Ltd., TEL: 65-7476188
Intl	**South Africa, Pinegowrie** Promilect Pty Ltd., TEL: 27-11789-1400
Intl	**Spain, Madrid** Sagitron, TEL: 1-402-6085
Intl	**Sweden, Solna** Naxab, TEL: 46-8-985140
Intl	**Switzerland, Wallisellen** Industrade AG, TEL: 8305040
Intl	**Taiwan, Taipei** Sertek International, TEL: 886-2-501-0055

Monolithic Systems

Monolithic Systems Corporation
84 Inverness Circle East
Englewood, Colorado 80112
303-790-7400

Mosaid

Mosaid
3375 Scott Blvd., Ste. 130
Santa Clara, California 95051
408-727-7199

Mostek

Mostek Corporation
1215 West Crosby Road
Carrollton, Texas 75006
214-466-6000
TELEX: 730423

Specific product information:

Microcomputers Components	Ron Waters
Telecommunications	Jim Garrett
Memory Components	Charlie Hochstedler
Semicustom/ASIC	Bill Woodruff
Military Components	Bob Donnelly

Literature:
Literature Department M/S 2205

Price and delivery:
Contact Sales Office or Dist.

Follow-up an order:
Customer Service

Sales Office & Representatives

AL	**Huntsville** Mostek, 205-539-2061
AZ	**Phoenix** Mostek, 602-279-0713
CA	**Irvine** Mostek, 714-250-0455
CA	**San Diego** CK Assocs., 619-279-0420
CA	**San Jose** Mostek, 408-287-5080
CO	**Denver** Mostek, 303-744-1666
CT	**Greenwich** Mostek, 203-531-1146
FL	**Tampa** Mostek, 813-962-8338
IL	**Rolling Meadows** Mostek, 312-577-9870
IN	**Carmel** Technology Mktg., 317-844-8462
IN	**Ft. Wayne** Technology Mktg., 219-432-5553
KS	**Olathe** Rush & West Assocs., 913-764-2700
KY	**Louisville** Technology Marketing, 502-499-7808
MA	**Burlington** Mostek, 617-273-3310
MI	**Plymouth** Mostek, 313-453-3223
MN	**Bloomington** Mostek, 612-831-2322
MO	**Ballwin** Rush & West Assocs., 314-394-7271
NJ	**Haddonfield** Tritek Sales, Inc., 609-429-1551, 215-627-0149 (Phila. Line)
NJ	**Marlton** Mostek, 609-596-9200
NM	**Albuquerque** Waugaman Assocs., 505-294-1437
NY	**E. Rochester** Tri-Tech Elctrns. Inc., 716-385-6500
NY	**Endwell** Tri-Tech Elctrns. Inc., 607-754-1094
NY	**Fayetteville** Tri-Tech Elctrns. Inc., 315-446-2881
NY	**Fishkill** Tri-Tech Elctrns. Inc., 914-897-5611
NY	**Liverpool** Mostek, 315-457-2160
NY	**Poughkeepsie** Mostek, 914-454-8813
OR	**Tigard** Mostek, 503-620-5517
TX	**Austin** Mostek, 512-458-5226
TX	**Dallas** Mostek, 214-386-9141
WA	**Seattle** Mostek, 206-632-0245
Can	**Brampton, Ontario** Cantec Reps. Inc., 416-791-5922
Can	**Dollard Des Ormeaux, Quebec** Cantec Reps. Inc., 514-683-6131
Can	**Ottawa, Ontario** Cantec Reps. Inc., 613-725-3704
Intl	**Austria, Vienna** Transistor Vertriebsges. mbH, TEL: (0222) 829451, 829404
Intl	**Belgium, Brussels** Mostek International, TEL: 02/762.18.80
Intl	**Denmark, Copenhagen** Semicap APS, TEL: 02/673-99-60
Intl	**Finland, Helsinki** Insele Oy, TEL: 90-750-600
Intl	**France, BUC** Copel, TEL: (1) 956.10.18
Intl	**France, Bonneuil** Mecodis, TEL: (1) 898-1111
Intl	**France, Chalon/Saone** Facen
Intl	**France, Clamart** P.E.P., TEL: (1) 630-2456
Intl	**France, Fresnes Cedex** Mostek France s.a.r.l., TEL: (4) 666.21.25
Intl	**France, Lille** Facen
Intl	**France, Nancy** Facen
Intl	**France, Rouen** Facen
Intl	**France, Rungis Cedex** Scaib, TEL: (1) 687.23.13
Intl	**France, Strasbourg** Facen
Intl	**France, Villeurbanne** Sorhodis, TEL: (7) 885-0044
Intl	**France, Wasquehal, Nord** Facen, TEL: (20) 98.92.15
Intl	**Germany, Berlin** Dr Dohrenberg, TEL: (030) 213.80.43
Intl	**Germany, Michelstadt** Ecker Michelstadt GmbH, TEL: (06061) 2233
Intl	**Germany, Munchen** Dema-Electronic GmbH, TEL: (089) 2724053
Intl	**Germany, Munchen** Mostek GmbH, TEL: (089) 95.10.71
Intl	**Germany, Neuhausen/Filder** Mostek GmbH, TEL: (07158) 66.45
Intl	**Germany, Quickborn** Mostek GmbH, TEL: (04106) 2077/78
Intl	**Germany, Ratingen** Raffel-Electronic GmbH, TEL: (02102) 280.24
Intl	**Germany, Stuttgart** Mostek GmbH, TEL: (07158) 6645
Intl	**Germany, Tubingen** Matronic GmbH, TEL: (07071) 45031
Intl	**Hong Kong, Hong Kong** Mostek Asia Ltd., TEL: 852568 1157-9 & 6 81150
Intl	**Ireland, Blanchardson County, Dublin** Mostek, TEL: 353-1 217333
Intl	**Italy, Bologna** Comprel s.r.l.
Intl	**Italy, Cinisello B.** Comprel s.r.l., TEL: (02) 61.20.641/2/3/4/5
Intl	**Italy, Firenze** Comprel s.r.l.
Intl	**Italy, Milano** Mostek Italia SRL, TEL: (02) 318.5337/349, 34.23.89
Intl	**Italy, Roma** Comprel s.r.l.
Intl	**Italy, Torino** Comprel s.r.l.
Intl	**Italy, Vicenza** Comprel s.r.l.
Intl	**Japan, Tokyo** Mostek Japan KK, TEL: (03) 496 4221
Intl	**Netherlands, Amsterdam** Nijkerk Elektronika BV, TEL: (020) 462-221
Intl	**Norway, Hoevik** SATT Elctrns. A/S, TEL: 02 123600
Intl	**Portugal, Lisbon** Digicontrole LDA, TEL: (19) 76.11.61
Intl	**Spain, Barcelona** Comelta S.A., TEL: (03) 300-7712
Intl	**Spain, Madrid** Comelta S.A., TEL: (01) 7543001
Intl	**Sweden, Jarfalla** Mostek Scandinavia AB, TEL: 08-36.2820
Intl	**Sweden, Stockholm** Nordisk Elektronik AB, TEL: 08-734.9770
Intl	**Switzerland, Langenthal** Memotec AG, TEL: 063-28.11.22
Intl	**United Kingdom, Gants Hill, Ilford, Essex** Pronto Elctrn. Systems Ltd., TEL: 01-554.62.22
Intl	**United Kingdom, Harlow, Essex** VSI Elctrns. (UK) Ltd., TEL: (0279) 35477
Intl	**United Kingdom, London** Mostek U.K. Ltd., TEL: 01-2049322
Intl	**United Kingdom, Reading, Berks** Celdis Ltd., TEL: 0734-58.51.71
Intl	**United Kingdom, Thame, Oxon** Thame Components Ltd., TEL: 084-421.31.46
PR	**Ponce** New England Technical Sales Corp, 809-843-7139

Distributors

AL	**Huntsville** Schweber Elctrns., 205-882-2200
AZ	**Phoenix** Kierulff Elctrns., 602-437-0750
AZ	**Tucson** Kierulff Elctrns., 602-624-9986

Mostek (Cont)

CA	**Anaheim**	Zeus/West, Inc., 714-632-6880
CA	**Chatsworth**	Arrow Elctrns., 213-701-7500
CA	**Haywood**	Arrow Elctrns., 415-487-4600
CA	**Irvine**	Schweber Elctrns., 714-863-0200
CA	**Los Angeles**	Kierulff Elctrns., 213-725-0325
CA	**San Diego**	Arrow Elctrns., 619-565-4800
CA	**San Diego**	Kierulff Elctrns., 619-278-2112
CA	**San Jose**	Kierulff Elctrns., 408-971-2600
CA	**Santa Clara**	Schweber Elctrns., 408-748-4700
CA	**Sunnyvale**	Arrow Elctrns., 408-745-6600
CA	**Tustin**	Arrow Elctrns., 714-838-5422
CA	**Tustin**	Kierulff Elctrns., 714-731-5711
CO	**Aurora**	Arrow Elctrns., 303-696-1111
CO	**Englewood**	Kierulff Elctrns., 303-790-4444
CT	**Danbury**	Schweber Elctrns., 203-792-3742
CT	**Wallingford**	Arrow Elctrns., 203-265-7741
CT	**Wallingford**	Kierulff Elctrns., 203-265-1115
FL	**Altamonte Springs**	Schweber Elctrns., 305-331-7555
FL	**Ft. Lauderdale**	Arrow Elctrns., 305-776-7790
FL	**Ft. Lauderdale**	Kierulff Elctrns., 305-486-4004
FL	**Hollywood**	Schweber Elctrns., 305-927-0511
FL	**Palm Bay**	Arrow Elctrns., 305-725-1480
FL	**St. Petersburg**	Kierulff Elctrns., 813-576-1966
GA	**Norcross**	Arrow Elctrns., 404-449-8252
GA	**Norcross**	Kierulff Elctrns., 404-447-5252
GA	**Norcross**	Schweber Elctrns., 404-449-9170
IL	**Elk Grove Village**	Kierulff Elctrns., 312-640-0200
IL	**Elk Grove Village**	Schweber Elctrns., 312-364-3750
IL	**Schaumburg**	Arrow Elctrns., 312-397-3440
IN	**Indianapolis**	Advent Elctrns., 317-872-4910
IN	**Indianapolis**	Arrow Elctrns., 317-243-9353
IN	**Indianapolis**	Pioneer Elctrns., 317-849-7300
IA	**Cedar Rapids**	Advent Elctrns., 319-363-0221
IA	**Cedar Rapids**	Arrow Elctrns., 319-395-7230
IA	**Cedar Rapids**	Schweber Elctrns., 319-373-1417
KS	**Overland Park**	Schweber Elctrns., 913-492-2921
MD	**Baltimore**	Arrow Elctrns., 301-247-5200
MD	**Gaithersburg**	Pioneer Elctrns., 301-948-0710
MD	**Gaithersburg**	Schweber Elctrns., 301-840-5900
MD	**Linthicum**	Kierulff Elctrns., 301-636-5800
MA	**Bedford**	Schweber Elctrns., 617-275-5100
MA	**Billerica**	Kierulff Elctrns., 617-935-5134
MA	**Burlington**	Lionex Corp., 617-272-9400
MA	**Woburn**	Arrow Elctrns., 617-933-8130
MI	**Ann Arbor**	Arrow Elctrns., 313-971-8220
MI	**Livonia**	Pioneer Elctrns., 313-525-1800
MI	**Livonia**	Schweber Elctrns., 313-525-8100
MI	**Madison Heights**	McNaughton-McKay Elctric, 313-399-7500
MN	**Edina**	Arrow Elctrns., 612-830-1800
MN	**Edina**	Kierulff Elctrns., 612-941-7500
MN	**Edina**	Schweber Elctrns., 612-941-5280
MO	**Earth City**	Schweber Elctrns., 314-739-0526
MO	**Kansas City**	Semiconductor Specs, 816-452-3900
MO	**Maryland Heights**	Kierulff Elctrns., 314-739-0855
MO	**St. Louis**	Arrow Elctrns., 314-567-6888
MO	**St. Louis**	Olive Elctrns., 314-426-4500
NH	**Manchester**	Arrow Elctrns., 603-668-6968
NH	**Manchester**	Schweber Elctrns., 603-625-2250
NJ	**Fairfield**	Arrow Elctrns., 201-575-5300
NJ	**Fairfield**	Kierulff Elctrns., 201-575-6750
NJ	**Fairfield**	Schweber Elctrns., 201-227-7880
NJ	**Marlton**	Arrow Elctrns., 609-596-8000, 710-897-0829
NM	**Albuquerque**	Arrow Elctrns., 505-243-4566
NY	**E. Syracuse**	ADD Elctrn., 315-437-0300
NY	**Hauppauge**	Arrow Elctrns., 516-231-1000
NY	**Hauppauge**	Lionex Corp., 516-273-1660
NY	**Liverpool**	Arrow Elctrns., 315-652-1000
NY	**Melville**	Arrow Elctrns., 516-391-1300, 510-224-6155
NY	**Rochester**	Arrow Elctrns., 716-427-0300
NY	**Rochester**	Schweber Elctrns., 716-424-2222
NY	**Westbury**	Schweber Elctrns., 516-334-7474
NC	**Greensboro**	Hammond Elctrns., 919-275-6391
NC	**Raleigh**	Arrow Elctrns., 919-876-3132
NC	**Raleigh**	Schweber Elctrns., 919-876-0000
NC	**Winston-Salem**	Arrow Elctrns., 919-725-8711
OH	**Beachwood**	Schweber Elctrns., 216-464-2970
OH	**Centerville**	Arrow Elctrns., 513-435-5563
OH	**Cleveland**	Kierulff Elctrns., 216-587-6558
OH	**Cleveland**	Pioneer Elctrns., 216-587-3600
OH	**Dayton**	Pioneer Elctrns., 513-236-9900
OH	**Dayton**	Schweber Elctrns., 513-439-1800
OH	**Solon**	Arrow Elctrns., 216-248-3990
OK	**Tulsa**	Arrow Elctrns., 918-665-7700
OK	**Tulsa**	Kierulff Elctrns., 918-252-7537
OK	**Tulsa**	Quality Components, 918-664-8812
OK	**Tulsa**	Schweber Elctrns., 918-622-8000
PA	**Horsham**	Pioneer Elctrns., 215-674-4000
PA	**Horsham**	Schweber Elctrns., 215-441-0600
PA	**Monroeville**	Arrow Elctrns., 412-856-7000
PA	**Pittsburgh**	Pioneer Elctrns., 412-782-2300
PA	**Pittsburgh**	Schweber Elctrns., 412-782-1600
SC	**Greenville**	Hammond Elctrns., 803-233-4121
TX	**Addison**	Quality Comps., 214-387-4949
TX	**Austin**	Arrow Elctrns., 512-835-4180
TX	**Austin**	Kierulff Elctrns., 512-835-2090
TX	**Austin**	Quality Comps., 512-835-0220
TX	**Austin**	Schweber Elctrns., 512-458-8253
TX	**Carrollton**	Arrow Elctrns., 214-380-6464, 910-860-5377
TX	**Dallas**	Kierulff Elctrns., 214-343-2400
TX	**Dallas**	Schweber Elctrns., 214-661-5010
TX	**Houston**	Arrow Elctrns., 713-530-4700, 910-880-4439
TX	**Houston**	Kierulff Elctrns., 713-530-7030
TX	**Houston**	Schweber Elctrns., 713-784-3600
TX	**Sugarland**	Quality Components, 713-491-2255
UT	**Salt Lake City**	Arrow Inds., 801-539-1135
UT	**Salt Lake City**	Kierulff Elctrns., 801-973-6913
WA	**Bellevue**	Arrow Elctrns., 206-643-4800
WA	**Tukwila**	Kierulff Elctrns., 206-575-4420
WI	**Brookfield**	Schweber Elctrns., 414-784-9020
WI	**Oak Creek**	Arrow Elctrns., 414-764-6600
WI	**Waukesha**	Kierulff Elctrns., 414-784-8160
Can	**Brampton, Ontario**	Zentronics, 416-451-9600
Can	**Burnaby, British Columbia**	R.A.E. Indl., 604-291-8866
Can	**Calgary, Alberta**	Zentronics, 403-272-1021
Can	**Edmonton, Alberta**	R.A.E. Industrial, 403-451-4001
Can	**Mississauga, Ontario**	Prelco Elctrns., 416-678-0401
Can	**Montreal, Quebec**	Prelco Elctrns., 514-389-8051
Can	**Nepean, Ontario**	Prelco Elctrns., 613-726-1800
Can	**Nepean, Ontario**	Zentronics, 613-226-8840, 06-97678
Can	**Richmond, British Columbia**	Zentronics, 604-273-5575
Can	**St. Laurent, Quebec**	Zentronics, 514-735-5361

Mostek (Cont)

Can	**Waterloo, Ontario**	Zentronics, 519-884-5700
Can	**Winnepeg, Manitoba**	Zentronics, 204-775-8661
Intl	**Austria, Vienna**	Transistor Vertriebsges. mbH, TEL: (0222) 829451, 829404
Intl	**Belgium, Brussels**	Sotronic, TEL: 02-736.10.07
Intl	**Denmark, Copenhagen**	Semicap APS, TEL: 01-22.15.10
Intl	**Finland, Helsinki**	Insele Oy, TEL: 0 735 774
Intl	**France, BUC**	Copel, TEL: (1) 956.10.18
Intl	**France, Bonneuil**	Mecodis, TEL: (1) 339.20.20
Intl	**France, Chalon/Saone**	Facen
Intl	**France, Lille**	Facen
Intl	**France, Montrouge**	P.E.P., TEL: (1) 735.33.20
Intl	**France, Nancy**	Facen
Intl	**France, Rouen**	Facen
Intl	**France, Rungis Cedex**	Scaib, TEL: (1) 687.23.13
Intl	**France, Strasbourg**	Facen
Intl	**France, Villeurbanne**	Sorhodis, TEL: (7) 885 0044
Intl	**France, Wasquehal, Nord**	Facen, TEL: (20) 98.92.15
Intl	**Germany, Berlin**	Dr Dohrenberg, TEL: (030) 213.80.43
Intl	**Germany, Berlin**	Neye Enatechnik GmbH
Intl	**Germany, Darmstadt**	Neye Enatechnik GmbH
Intl	**Germany, Dusseldorf**	Neye Enatechnik GmbH
Intl	**Germany, Gerlingen**	Positron GmbH
Intl	**Germany, Goettingen**	Retron GmbH
Intl	**Germany, Hannover**	Neye Enatechnik GmbH
Intl	**Germany, Michelstadt**	Siegfried Ecker, TEL: (06061) 2233
Intl	**Germany, Munchen**	Dema-Electronic GmbH, TEL: (089) 2724053
Intl	**Germany, Munchen**	Neye Enatechnik GmbH
Intl	**Germany, Quickborn**	Neye Enatechnik GmbH, TEL: (04106) 612-1
Intl	**Germany, Ratingen**	Raffel-Electronic GmbH, TEL: (02102) 280.24
Intl	**Germany, Stuttgart**	Neye Enatechnik GmbH
Intl	**Germany, Tubingen**	Matronic GmbH, TEL: (07071) 24331
Intl	**Israel, Tel Aviv**	Telsys Ltd.
Intl	**Italy, Bari**	Comprel s.r.l.
Intl	**Italy, Bologna**	Comprel s.r.l.
Intl	**Italy, Bologna**	Emesa S.P.A.
Intl	**Italy, Chiavari**	Comprel s.r.l.
Intl	**Italy, Cinisello B.**	Comprel s.r.l., TEL: (02) 61.20.641/2/3/4/5
Intl	**Italy, Firenze**	Comprel s.r.l.
Intl	**Italy, Loreto**	Comprel s.r.l.
Intl	**Italy, Milan**	Kontron, S.p A
Intl	**Italy, Milano**	Emesa S.P.A., TEL: (02) 869.0616, (02) 860.307
Intl	**Italy, Padova**	Comprel s.r.l.
Intl	**Italy, Roma**	Comprel s.r.l.
Intl	**Italy, Roma**	Emesa S.P.A.
Intl	**Italy, Torino**	Comprel s.r.l.
Intl	**Italy, Torino**	Emesa S.P.A.
Intl	**Italy, Vicenza**	Comprel s.r.l.
Intl	**Netherlands, Amsterdam**	Nijkerk Elektronika BV, TEL: (020) 428.933
Intl	**Northern Ireland, Belfast**	Hill Electronics
Intl	**Norway, Oslo**	Hefro Teknisk A/S, TEL: 02-38.02.86
Intl	**Portugal, Lisbon**	Digicontrole LDA, TEL: (19) 292 39 24
Intl	**South Africa, Transvaal**	Promilect
Intl	**Spain, Barcelona**	Comelta S.A., TEL: (03) 309 5116
Intl	**Spain, Madrid**	Comelta S.A., TEL: (01) 7543001
Intl	**Sweden, Farsta**	Traco AB, TEL: 08-13.21.60
Intl	**Switzerland, Langenthal**	Memotec AG, TEL: 063-28.11.22
Intl	**United Kingdom, Gants Hill, Ilford, Essex**	Pronto Elctrn. Systems Ltd., TEL: 01-554.62.22
Intl	**United Kingdom, Harlow, Essex**	VSI Elctrns. (UK) Ltd., TEL: (0279) 35477
Intl	**United Kingdom, Oldham, Lancashire**	Lock Distribution Ltd., TEL: 061-652.04.31
Intl	**United Kingdom, Reading, Berks**	Celdis Ltd., TEL: 0734-58.51.71
Intl	**United Kingdom, Thame, Oxon**	Thame Components Ltd., TEL: 084-421.31.46

Motorola

Motorola Semiconductor Products
5005 East McDowell Road
Phoenix, Arizona 85008

Specific product information:
Local sales office

Application engineering:
Local sales office

Literature:
Local sales office

Price and delivery:
Local sales office

Place an order:
Local sales office

Follow-up an order:
Local sales office

Sales Office & Representatives

AL	**Huntsville**	Motorola, 205-830-1050
AZ	**Phoenix**	Motorola, 602-244-7100
AZ	**Scottsdale**	Motorola Semiconductor Inter-Company Office, 602-949-3811
CA		Hall-Mark Elect, 213-643-9101
CA		Hamilton/Avnet Elect, 213-615-3900
CA	**Agoura**	Motorola, 213-872-1505
CA	**Chatsworth**	Anthem Elect, 818-700-1000
CA	**Chatsworth**	Avnet Elect, 818-700-2600
CA	**Chatsworth**	Hamilton Electro Sls, 818-700-6500
CA	**Chatsworth**	Kierulff Elect, 213-341-2211
CA	**Cypress**	Kierulff Elect, 714-220-6300
CA	**Gardena**	Schweber Elect, 213-327-8409
CA	**Los Angeles**	, 213-417-8848
CA	**Orange**	Motorola, 714-634-2844
CA	**Sacramento**	Motorola, 916-922-7152
CA	**San Diego**	Motorola, 619-560-4644
CA	**San Jose**	Anthem Elect, 408-946-8000
CA	**San Jose**	Future Elect, 408-945-9100
CA	**San Jose**	Hall-Mark Elect, 408-946-0900
CA	**San Jose**	Kierulff Elect, 408-971-2600
CA	**San Jose**	Motorola, 408-985-0510
CO	**Boulder**	Front Range Marketing, 303-443-4780
CO	**Colorado Springs**	Motorola, 303-599-7404
CO	**Denver**	Motorola, 303-337-3434
CT	**Goshen**	Northern Computer Sales, 203-482-3007
CT	**Wallingford**	Motorola, 203-284-0810
FL	**Casselberry/Maitland**	Motorola, 305-628-2636
FL	**Ft. Lauderdale**	Motorola Semiconductor Inter-Company Office, 305-486-9775
FL	**Pompano Beach/Ft. Lauderdale**	Motorola, 305-486-9775
FL	**St. Petersburg**	Motorola, 813-576-6030
GA	**Atlanta**	Motorola, 404-256-0222
IL	**Chicago/Schaumburg**	Motorola, 312-576-7800
IL	**Franklin Park**	Motorola Semiconductor Inter-Company Office, 312-576-2788
IN	**Ft. Wayne**	Motorola, 219-484-0436
IN	**Indianapolis**	Motorola, 317-849-7060
IN	**Kokomo**	Motorola, 317-457-6634
IA	**Cedar Rapids**	Motorola, 319-373-1328
IA	**Davenport**	Rush & West Associates, Inc., 319-326-3091
KS	**Kansas City**	Motorola, 913-384-3050
MD	**Hyattsville**	Motorola, 301-577-2600
MA	**Berlin**	Motorola, 617-562-3856

Motorola (Cont)

MA **Burlington**
Motorola, 617-273-5020
MA **Westwood**
Northern Computer Sales, 617-326-3454
MI **Brighton**
Electronic Source, Inc., 313-227-3598
MI **Detroit/Westland**
Motorola, 313-261-6200
MN **Minneapolis**
Motorola, 612-941-6800
MO **St. Louis**
Motorola, 314-872-7681
NJ **River Edge**
Motorola, 201-488-1200
NY **Fairport**
Motorola, 716-361-7000
NY **Hauppauge**
Motorola, 516-361-7000
NY **Poughkeepsie**
Motorola, 914-473-8102
NC **Raleigh**
Motorola, 919-876-6025
OH **Cleveland**
Motorola, 216-349-3100
OH **Columbus**
Motorola, 614-846-9460
OH **Dayton**
Motorola, 513-294-2231
OK **Tulsa**
Genzel Sales & Assoc., Inc., 918-622-7744
OK **Tulsa**
Motorola, 918-664-5227
OR **Beaverton**
Thorson Co. Northwest, 503-644-5900
OR **Portland**
Motorola, 503-641-3681
PA **King of Prussia**
K.S.I., 215-783-6400
PA **Philadelphia**
Motorola, 215-443-9400
TN **Knoxville**
Motorola, 615-690-5592
TX **Austin**
Motorola, 512-452-7673
TX **Dallas**
Motorola, 214-699-3900
TX **Ft. Worth**
Motorola Semiconductor Inter-Company Office, 817-232-6255
TX **Houston**
Motorola, 713-783-6400
UT **Salt Lake City**
Front Range Marketing, 801-364-6481
UT **Salt Lake City**
Motorola, 801-539-1190
VA **Charlottesville**
Motorola, 804-977-3691
WA **Bellevue**
Motorola, 206-454-4160, 206-622-9960 (Seattle Access)
WA **Bellevue**
Thorson Co. Northwest, 206-455-9180
WI **Milwaukee**
Motorola, 414-476-5554
Can **Calgary, Alberta**
Hi-Tech Sales Limited, 403-229-6990
Can **Hong Kong**
Components Agent Ltd., 0-4992688
Can **Montreal, Quebec**
Motorola, 514-731-6881
Can **North York/Willowdale, Ontario**
Motorola, 416-497-8181
Can **Ottawa, Ontario**
Motorola, 613-226-3491
Can **Winnipeg, Manitoba**
Motorola, 204-889-0693
Intl **Argentina, Buenos Aires**
Motorola, TEL: 1-30-2461
Intl **Australia, Melbourne**
Motorola, TEL: (03) 561-3555
Intl **Australia, Sydney**
Motorola, TEL: (02) 438-1955, 439-2242
Intl **Austria, Vienna**
Motorola, TEL: (0222) 31-65-45
Intl **Brazil, Sao Paulo**
Motorola, TEL: (011) 572 3553
Intl **British Columbia, Burnaby**
Hi-Tech Sales Limited, TEL: 604-524-2131
Intl **Denmark, Gladsaxevej**
Motorola, TEL: (01) 67 44 22
Intl **France, Grenoble**
Motorola, TEL: (076) 90 22 81
Intl **France, Paris**
Motorola, TEL: (01) 736-01-99
Intl **France, Toulouse**
Motorola, TEL: (061) 41-90-00
Intl **Germany, Langenhagen/Hannover**
Motorola, TEL: (0511) 78-99-11
Intl **Germany, Munich**
Motorola, TEL: (089) 92720
Intl **Germany, Nurenberg**
Motorola, TEL: (0911) 643044
Intl **Germany, Sindelfingen**
Motorola, TEL: (07031) 83074
Intl **Germany, Wiesbaden**
Motorola, TEL: (06121) 76-1921
Intl **Hong Kong, Kwai Chung**
Motorola, TEL: 0-223111, 3-336211-22
Intl **Israel, Tel Aviv**
Motorola, TEL: 3-388-388
Intl **Italy, Bologna**
Motorola, TEL: (051) 533 446
Intl **Italy, Milan**
Motorola, TEL: (02) 82201, 824-2046
Intl **Italy, Rome**
Motorola, TEL: (03) 831 4746
Intl **Japan, Osaka**
Motorola, TEL: (06) 305 1421
Intl **Japan, Tokyo**
Motorola, TEL: 03-440-3311
Intl **Korea, Busan**
Motorola, TEL: 51-463-5035
Intl **Korea, Seoul**
Motorola, TEL: (2) 554-5118
Intl **Malaysia, Penang**
Motorola, TEL: 04-374514
Intl **Mexico, D.F.**
Motorola, TEL: (525) 520-4351
Intl **Netherlands, Utrecht**
Motorola, TEL: 030 443-808
Intl **Norway, Oslo**
Motorola, TEL: (02) 19-80-70
Intl **Scotland, East Kilbride**
Motorola, TEL: (03552) 39 101
Intl **Singapore**
Dynamar International Ltd., TEL: 747-6188
Intl **Singapore**
Motorola, TEL: 65-2945438
Intl **South Africa, Bramley**
Motorola, TEL: 786 1184
Intl **South Africa, Johannesburg**
Associated Electronics (Pty) Ltd., TEL: 011 839 18 24
Intl **Spain, Madrid**
Motorola, TEL: (01) 458-1061
Intl **Sweden, Solna**
Motorola, TEL: 08/83-02-00
Intl **Switzerland, Geneva**
Motorola, TEL: (022) 991 111
Intl **Switzerland, Zurich**
Motorola, TEL: (01) 730 40 74
Intl **Taiwan, Taipei**
Motorola, TEL: (02) 7528944
Intl **United Kingdom, Aylesbury/Bucks**
Motorola, TEL: (0296) 35252
PR **Puerto Rico, San Juan**
Motorola, 809-721-3021

Distributors

AL **Huntsville**
Hall-Mark Elctrns., 205-837-8700
AL **Huntsville**
Hamilton/Avnet Elctrns., 205-837-7210
AL **Huntsville**
Kierulff Elec., 205-883-6070
AL **Huntsville**
Pioneer/Standard, 205-837-9300
AL **Huntsville**
Schweber Electronics, 205-882-2200
AZ **Phoenix**
Hall-Mark Electronics, 602-437-1200
AZ **Phoenix**
Kierulff, 602-437-0750
AZ **Phoenix**
Schweber Elect., 602-997-4874
AZ **Tempe**
Anthem Elect., 602-966-6600
AZ **Tempe**
Bell Elect., 602-966-7800
AZ **Tempe**
Hamilton/Avnet Elctrns., 602-231-5100
CA **Anaheim**
Zeus West, 714-632-6880
CA **Canoga Park**
Hall-Mark Electronics, 818-716-7300
CA **Canoga Park**
Hallmark Elect., 818-716-7300
CA **Canoga Park**
Schweber Electronics, 213-999-4702
CA **Chatsworth**
Anthem Elect., 818-700-2600
CA **Chatsworth**
Anthem Elect., 818-700-1000
CA **Chatsworth**
Hamilton Elect., 818-700-6500
CA **Chatsworth**
Kierulff Elect., 213-341-2211
CA **Costa Mesa**
Avnet, 714-754-6111, 213-558-2345
CA **Costa Mesa**
Hamilton Electro Sales, 714-641-4100
CA **Culver City**
Hamilton Electro Sales/L.A., 213-558-2501
CA **Culver City**
Hamilton/Avnet Corporate Headquarters, 213-558-2323
CA **Cypress**
Kierulff Elect., 714-220-6300
CA **Gardena**
Schweber Elect., 213-327-8409
CA **Irvine**
Anthem Elect., 714-730-8000
CA **Irvine**
Anthem Electronics, 714-768-4444
CA **Irvine**
Schweber Elctrns., 213-537-4321, 714-556-3880
CA **Los Angeles**
Kierulff Electronics, 213-725-0325
CA **Ontario**
Hamilton/Avnet Electrns., 714-989-4602
CA **Roseville**
Bell Industries, 916-969-3100
CA **Sacramento**
Anthem Elect., 916-922-6800
CA **Sacramento**
Hall/Mark Elect., 916-722-8600
CA **Sacramento**
Hamilton/Avnet Electronics, 916-925-2216
CA **Sacramento**
Schweber Electronics, 916-929-9732
CA **San Diego**
Anthem Elect., 619-453-9005
CA **San Diego**
Hall-Mark Electronics, 714-268-1201
CA **San Diego**
Hamilton/Avnet Elctrns., 714-571-7510

Motorola (Cont)

CA	**San Diego**	Kierulff Elctrns., 714-278-2118
CA	**San Diego**	Schweber Elect., 619-450-0454
CA	**San Jose**	Anthem Elect., 408-946-8000
CA	**San Jose**	Future Elect., 408-945-9100
CA	**San Jose**	Hall-Mark Elect., 408-946-0900
CA	**San Jose**	Kierulff Elect., 408-971-2600
CA	**Santa Clara**	Schweber Elctrns., 408-946-7171
CA	**Santa Clara**	Zeus Components, 408-727-0714
CA	**Sunnyvale**	Bell Inds., 408-734-8570
CA	**Sunnyvale**	Hamilton/Avnet Electrns., 408-743-3300
CA	**Torrance**	Hall-Mark Elect., 213-643-9101
CA	**Torrance**	Hall-Mark Electronics, 213-217-8400
CA	**Torrance**	Hamilton/Avnet Elect., 213-615-3900
CA	**Tustin**	Hall Mark Elctrns., 714-586-9346
CA	**Tustin**	Kierulff Electronics, 714-731-5711
CA	**Woodland Hills**	Hamilton/Avnet Electronics, 818-887-2353
CO	**Denver**	Kierulff Elctrns., 303-790-4444
CO	**Denver**	Schweber Elect., 303-779-0258
CO	**Englewood**	Anthem Elect., 303-790-4500
CO	**Englewood**	Hall-Mark Electronics, 303-694-1662
CO	**Englewood**	Hamilton/Avnet Elctrns., 303-740-1000
CO	**Westminster**	Future Elect., 303-650-0123
CO	**Wheatridge**	Bell Industries, 303-424-1985
CT	**Danbury**	Future Elect., 203-743-9594
CT	**Danbury**	Hamilton/Avnet Elctrns., 203-797-2800
CT	**Danbury**	Schweber Elctrns., 203-792-3500
CT	**Norwalk**	Pioneer/Harvey Elctrns., 203-853-1515
CT	**Wallingford**	Hall-Mark Electronics, 203-269-0100
CT	**Wallingford**	Hall/Mark Elect., 203-269-0100
CT	**Wallingford**	Kieruff Elect., 203-265-1115
CT	**West Hartford, CT**	Hartford Electric Supply, 203-236-6171
FL	**Altamonte Springs**	Pioneer/Florida, 305-834-9090
FL	**Altamonte Springs**	Schweber Electronics, 305-331-7555
FL	**Clearwater**	Future Elect., 813-441-4771
FL	**Deerfield Beach**	Pioneer Electronics, 305-428-8877
FL	**Elk Grove Village**	Bell Elect., 312-640-1910
FL	**Ft. Lauderdale**	Hamilton/Avnet Elctrns., 305-971-2900
FL	**Ft. Lauderdale**	Kierulff Electronics, 305-486-4004
FL	**Ft. Lauderdale**	Pioneer/Ft. Lauderdale, 305-428-8877
FL	**Hollywood**	Schweber Elctrns., 305-927-0511
FL	**Orlando**	Hall-Mark Elctrns., 305-855-4020
FL	**Orlando**	Hamilton-Avnet Elect., 305-628-3888
FL	**Oviedo**	Zeus Components, 813-748-3125
FL	**Pompano Beach**	Hall-Mark Elctrns., 305-971-9280
FL	**St. Petersburg**	Hall/Mark Elect., 813-530-4543
FL	**St. Petersburg**	Hamilton/Avnet Elctrns., 813-576-3930
FL	**St. Petersburg**	Kierulff Elctrns. Inc., 813-576-1966
FL	**Winter Park**	Hamilton-Avnet Elect., 305-628-3888
GA	**Norcross**	Hall-Mark Electronics, 404-447-8000
GA	**Norcross**	Hamilton/Avnet Elctrns., 404-447-7507
GA	**Norcross**	Kierulff Electronics, 404-447-5252
GA	**Norcross**	Pioneer/Atlanta, 404-448-1711
GA	**Norcross**	Schweber Elctrns., 404-449-9170
IL	**Bensenville**	Hamilton/Avnet Electronics, 312-860-7700
IL	**Chicago**	Bell Ind., 312-982-9210
IL	**Chicago**	Newark Elctrns. Corp., 312-784-5100
IL	**Elk Grove Village**	Kierulff, 312-640-0200
IL	**Elk Grove Village**	Pioneer/Chicago, 312-437-9680
IL	**Elk Grove Village**	Schweber Elctrns., 312-364-3770
IL	**Itasca**	Kierulff Elect., 312-250-0500
IL	**Schaumburg**	Future Elect., 312-882-1255
IL	**Woodale**	Hall/Mark Elect., 312-860-3800
IN	**Ft. Wayne**	Graham Elect., 219-423-3422
IN	**Indianapolis**	Graham Elctrns. Supply, Inc., 317-634-8208
IN	**Indianapolis**	Hamilton/Avnet Elctrns., 317-844-9333
IN	**Indianapolis**	Pioneer/Standard, 317-849-7300
IN	**Lafayette**	Graham Elect., 317-423-5564
IA	**Cedar Rapids**	Bell Elctrns., 319-395-0730
IA	**Cedar Rapids**	Hamilton/Avent Elect., 319-362-4757
IA	**Cedar Rapids**	Schweber Electronics, 319-373-1417
KS	**Lexena**	Hall/Mark Elect., 913-888-4747
KS	**Overland Park**	Hamilton/Avnet Elctrns., 913-888-8900
KS	**Overland Park**	Schweber Elctrns., 913-492-2921
LA	**New Orleans**	Reily Electrical Supply, 504-897-2211
MD	**Baltimore**	Hall-Mark Elctrns., 301-796-9300
MD	**Baltimore**	Kierulff Electronics, 301-636-5800
MD	**Columbia**	Future Elect., 301-995-1222
MD	**Columbia**	Hall/Mark Elect., 301-988-9800
MD	**Columbia**	Hamilton/Avnet, 301-995-3500
MD	**Gaithersburg**	Pioneer/Technologies Group, 301-921-0660
MD	**Gaithersburg**	Schweber Elctrns., 301-840-5900
MA	**Bedford**	Schweber Elctrns., 617-275-5100
MA	**Billerica**	Hall/Mark Elect., 617-935-9777
MA	**Billerica**	Kierulff Elctrns., 617-667-8331
MA	**Burlington**	Lionex Corp., 617-272-9400
MA	**Lexington**	Pioneer, 617-861-9200
MA	**Lexington**	Zeus Comps., 617-273-0750
MA	**Westborough**	Future Corp., 617-366-2400
MA	**Wilmington**	Lionex Corp., 617-657-5170
MA	**Woburn**	Hamilton/Avnet Elctrns., 617-273-7500
MI	**Ann Arbor**	Graham Elect., 313-971-9093
MI	**Grand Rapids**	Hamilton/Avnet Electronics, 616-243-8805
MI	**Livonia**	Hamilton/Avnet Elctrns., 313-522-4700
MI	**Livonia**	Pioneer/Michigan Elctrns., 313-525-1800
MI	**Livonia**	Schweber Elctrns., 313-525-8100
MI	**Madison Heights**	McNaughton-McKay Electric Co., 313-399-7500
MN	**Bloomington**	Hall-Mark Elctrns., 612-854-3223
MN	**Edina**	Kierulff Elctrns., 612-941-7500
MN	**Edina**	Schweber Elctrns., 612-941-5280
MN	**Minnetonka**	Hamilton/Avnet Elctrns., 612-932-0600
MN	**Minnetonka**	Pioneer/Twin Cities, 612-935-5444
MO	**Earth City**	Hall-Mark Elctrns., 314-291-5350
MO	**Earth City**	Hamilton/Avnet Elctrns., 314-344-1200
MO	**Earth City**	Schweber Elect., 314-739-0526
MO	**Maryland Heights**	Kierulff Electronics, 314-739-0855
NJ	**Cherry Hill**	Hall-Mark Elctrns., 609-424-7300
NJ	**Cherry Hill**	Hamilton/Avnet Elctrns., 609-424-0110, 215-925-6900
NJ	**Fairfield**	Hall-Mark Electronics, 201-575-4415
NJ	**Fairfield**	Hamilton/Avnet Elctrns., 201-575-3390
NJ	**Fairfield**	Kierulff Electronics, 201-575-6750
NJ	**Fairfield**	Schweber Elctrns., 201-227-7880
NJ	**Mt. Laurel**	Future Elect., 609-778-7600
NJ	**Pinebrook**	Pioneer/Pinebrook, 201-575-3510
NM	**Albuquerque**	Alliance Elctrns., 505-292-3360
NM	**Albuquerque**	Bell Industries, 505-292-2700
NM	**Albuquerque**	Hamilton/Avnet Elctrns., 505-765-1500
NY	**Binghamton**	Pioneer-Harvey, 607-748-8211
NY	**East Syracuse**	Hamilton/Avnet Elctrns., 315-437-2641
NY	**Farmingdale**	Nu Horizons Electronics Corp, 516-694-2500
NY	**Hauppauge**	Hamilton/Avnet Elctrns., 516-231-9800

Motorola (Cont)

NY	**Hauppauge**	Lionex Corporation, 516-273-1660
NY	**Liverpool**	Future Elect., 315-451-2371
NY	**Port Chester**	Zeus Components, 914-937-7400
NY	**Rochester**	Hamilton/Avnet Elctrns., 716-475-9130
NY	**Rochester**	Schweber Elctrns., 716-424-2222
NY	**Ronkonkoma**	Hall/Mark Elect., 516-737-0600
NY	**Vestal**	Pioneer Elect., 607-748-8211
NY	**Westbury**	Schweber Elctrns., 516-334-7474
NY	**Woodbury**	Pioneer/Woodbury Elctrns., 516-921-8700
NC	**Charlotte**	Pioneer/Carolina, 704-527-8188
NC	**Raleigh**	Hall-Mark Elctrns., 919-872-0712
NC	**Raleigh**	Hamilton/Avnet Elctrns., 919-878-0810
NC	**Raleigh**	Kierulff Elect., 919-872-8410
NC	**Raleigh**	Schweber Elctrns., 919-876-0000
OH	**Beachwood**	Schweber Elctrns., 216-464-2970
OH	**Centerville**	Hamilton/Avnet Elctrns., 513-439-6700
OH	**Cincinnati**	Graham Electronics, 513-772-1661
OH	**Cincinnati**	Hall-Mark Elctrns., 513-563-5980
OH	**Cleveland**	Hall-Mark Elctrns., 216-349-4632
OH	**Cleveland**	Hamilton/Avnet Elctrns., 216-831-3500
OH	**Cleveland**	Kierulff Elect., 216-587-6558
OH	**Cleveland**	Pioneer/Cleveland, 216-587-3600
OH	**Columbus**	Graham Elect., 614-895-1590
OH	**Columbus**	Hamilton-Avnet Elctrns., 614-882-7004
OH	**Dayton**	Bell Industries, 513-434-8231
OH	**Dayton**	Kierulff Elect., 513-439-0030
OH	**Dayton**	Pioneer/Dayton, 513-236-9900
OH	**Dayton**	Schweber Electronics, 513-439-1800
OH	**Worthington**	Hall-Mark Elctrns., 614-883-3313
OK	**Tulsa**	Hall-Mark Elctrns., 918-665-3200
OK	**Tulsa**	Kierulff Electronics, 918-252-7537
OK	**Tulsa**	Schweber Electronics, 918-622-8000
OR	**Beaverton**	Almac/Stroum Elctrns., 503-641-9070
OR	**Lake Oswego**	Anthem Elect., 503-684-2661
OR	**Lake Oswego**	Bell Industries, 503-241-4115
OR	**Lake Oswego**	Hamilton/Avnet Elctrns., 503-635-8831
OR	**Portland**	Kierulff Electronics, 503-641-9150
PA	**Horsham**	Lionex Corp., 215-442-5150
PA	**Horsham**	Pioneer/Delaware Valley, 215-674-4000
PA	**Horsham**	Schweber Elctrns., 215-441-0600
PA	**Pittsburgh**	Hamilton/Avnet Elect., 412-281-4150
PA	**Pittsburgh**	Pioneer/Pittsburgh, 412-782-2300
PA	**Pittsburgh**	Schweber Electronics, 412-782-1600
TX	**Austin**	Hall-Mark Elctrns., 512-258-8848
TX	**Austin**	Hamilton/Avnet Elctrns., 512-837-8911
TX	**Austin**	Pioneer Electronics, 512-835-4000
TX	**Austin**	Pioneer/Austin, 512-835-4000
TX	**Austin**	Schweber Electronics, 512-458-8253
TX	**Austen**	Kierulff Elect., 512-835-2090
TX	**Dallas**	Hall-Mark Corporate, 214-343-5000
TX	**Dallas**	Hall-Mark Elctrns., 214-341-1147
TX	**Dallas**	Kierulff Electronics, 214-343-2400
TX	**Dallas**	Pioneer/Dallas, 214-386-7300
TX	**Dallas**	Schweber Elctrns., 214-661-5010
TX	**Dallas**	Zeus Components, 214-783-7010
TX	**Houston**	Hall-Mark Elctrns., 713-781-6100
TX	**Houston**	Hamilton/Avnet Elctrns., 713-780-1771
TX	**Houston**	Kierulff Electronics, 713-530-7030
TX	**Houston**	Pioneer/Houston, 713-988-5555
TX	**Houston**	Schweber Elctrns., 713-784-3600
TX	**Irving**	Hamilton/Avnet Elctrns., 214-659-4111
UT	**Salt Lake City**	Anthem Elect., 801-973-8555
UT	**Salt Lake City**	Bell Inds., 801-972-6969
UT	**Salt Lake City**	Future Elect., 801-972-8489
UT	**Salt Lake City**	Hamilton/Avnet Elctrns., 801-972-2800
UT	**Salt Lake City**	Kierulff Electronics, 801-973-6913
WA	**Bellevue**	Almac Elctrns., 206-643-9992
WA	**Bellevue**	Bell Industries, 206-747-1515
WA	**Bellevue**	Future Elect., 206-881-8199
WA	**Bellevue**	Hamilton/Avnet Elctrns., 206-643-3950
WA	**Redmond**	Anthem Elect., 206-881-0850
WA	**Spokane**	Almac Elect., 509-924-9500
WA	**Tukwila**	Kierulff Electronics, 206-575-4420
WI	**Brookfield**	Schweber Electronics, 414-784-9020
WI	**New Berlin**	Hamilton/Avnet Elctrns., 414-784-4510
WI	**New Berling**	Hall/Mark Elect., 414-797-7844
WI	**Oak Creek**	Hall-Mark Elctrns., 414-761-3000
WI	**Waukesha**	Bell Industries, 414-547-8879
WI	**Waukesha**	Kierulff Electronics, 414-784-8160
Can	**Calgary, Alberta**	Future Electronics, 403-259-6408
Can	**Calgary, Alberta**	Hamilton/Avnet Elect., 403-230-3586
Can	**Calgary, Alberta**	Varah, S. Ltd., 403-276-8818
Can	**Downsview, Ontario**	Arrow/Cesco Elect. Ltd., 416-661-0220
Can	**Downsview, Ontario**	Future Elect., 416-638-4771
Can	**Edmonton, Alberta**	Varah S, 403-461-2222
Can	**India**	Valley Electronics, 602-829-1100
Can	**London, Ontario**	C.M. Peterson Co., Ltd., 519-434-3204
Can	**Mississauga, Ontario**	Hamilton/Avnet Int'l. Canada Ltd., 416-677-7432
Can	**Montreal, Quebec**	Future Electronics, 514-694-7710
Can	**Oakville, Ontario**	Varah S, 416-561-9311
Can	**Ontario**	Hamilton/Avent, 714-989-4602
Can	**Ottawa, Ontario**	Arrow/Cesco Elect. Ltd., 613-226-6903
Can	**Ottawa, Ontario**	Future Electronics, 613-820-8313
Can	**Ottawa, Ontario**	Hamilton/Avnet Int'l. Canada Ltd., 613-226-1700
Can	**Ottawa, Ontario**	Varah S, 613-726-8884
Can	**Quebec City, Quebec**	Arrow/Cesco Elctrns., Ltd., 418-524-4641
Can	**St. Laurent, Quebec**	Hamilton/Avnet Int'l. Canada Ltd., 514-335-1000
Can	**Vancouver, B.C.**	Future Electronics, 604-438-5545
Can	**Vancouver, B.C.**	Hamilton/Avnet Elect., 604-437-6667
Can	**Vancouver, British Columbia**	Intek Elctrns., Ltd., 604-324-6831
Can	**Vancouver, British Columbia**	Varah, S. Ltd., 604-873-3211
Can	**Willowdale, Ontario**	Electro Sonic, Inc., 416-494-1666

MRC Systems

MRC Systems
7320 Ashcroft, S-302
Houston, Texas 77081
713-771-7511

Multiwire

Multiwire
250 Miller Place
Hicksville, New York 11801
516-933-8300

National Microelectronics

National Microelectronics Corporation
3054 Scott Blvd.
Santa Clara, California 95054
408-727-9239
TELEX: 172730 NMC SNTA
TELEX: FAX: 408-970-0548

National Semiconductor

National Semiconductor Corporation
2900 Semiconductor Drive
Santa Clara, California 95051
408-721-5000
TWX: 910-339-9240

Specific product information:

Digital Dept. Head	ext. 5716
Bipolar Logic	ext. 5832
CMOS Logic	ext. 5720
Interface	ext. 5873
Discrete Devices	ext. 5710
Hybrid Devices	ext. 5854
Linear IC	ext. 5717
Advanced Linear	ext. 5884
Consumer Linear	ext. 5853

Application engineering:

Discrete	ext. 5566
Hybrid	ext. 6264
Advanced Linear	ext. 5613
Consumer	ext. 5607
Standard	ext. 5622
Microprocessors	ext. 5264
MOS/LSI	ext. 6523

Literature:

Marketing Services	ext. 5142

Price and delivery:
Local sales office

Place an order:
Local sales office

Follow-up an order:
Customer Service

Distributor Sales	ext. 6610
OEM Sales	ext. 6620

All other information:

Public Relations	ext. 5287

Sales Office & Representatives

Intl	**Australia, Bayswater, Victoria**	NS Elctrns. Pty. Ltd., TEL: 03-729-6333
Intl	**Belgium, Brussels**	Natl. Semiconductor Benelux, TEL: (02) 4661807
Intl	**Brazil, Sao Paulo**	Nat'l Semiconductor Do Brasil, TEL: (55/11) 212-5066
Intl	**Denmark, Copenhagen**	Natl. Semiconductor (UK), Ltd., TEL: (01) 213211
Intl	**Finland, Helsinki**	Natl. Semiconductor, TEL: 90 14 03 44
Intl	**France, Fontenay-aux-Roses**	Natl. Semiconductor, TEL: (01) 660-8140
Intl	**Hong Kong, Kowloon**	Natl. Semiconductor Hong Kong, Ltd., TEL: 3-7231290
Intl	**Italy, Milano**	Natl. Semiconductor S.p.A., TEL: (02) 345-2046/7/8/9
Intl	**Japan, Tokyo**	NS Japan K.K., TEL: (03) 988-2131
Intl	**Korea, Seoul**	Natl. Semiconductor (Far East), Ltd., TEL: 797-8001
Intl	**Mexico, Mexico**	Elctrna. NSC de Mexico SA, TEL: (905) 524-9402, 524-9996;524-9757
Intl	**Singapore**	Natl. Semiconductor PTE, Ltd., TEL: 2506884
Intl	**Spain, Madrid**	Natl. Semiconductor, TEL: (01) 733-2954/733-2958
Intl	**Sweden, Skarholmen**	Natl. Semiconductor AB, TEL: (08) 970190
Intl	**Switzerland, Wallisellen-Zurich**	Natl. Semiconductor Switzerland, TEL: (01) 830-2727
Intl	**Taiwan, Taipei**	Natl. Semiconductor Taiwan, Ltd., TEL: (02) 501-7227
Intl	**United Kingdom, Bedford**	Natl. Semiconductor (UK), Ltd., TEL: 0234-47147
Intl	**West Germany, Munchen**	Natl. Semiconductor GmbH, TEL: (089) 5 70 95 01

NCA Corporation

NCA Corporation
3250 Jay St.
Santa Clara, California 95054
408-986-1800

NCM Corporation

NCM Corporation
1500 Wyatt Drive, Suite 9
Santa Clara, California 95054
408-496-0290
TELEX: 172932
TELEX: NCMCORP

Sales Office & Representatives

Intl	**Korea, Seoul**	Dong Il Eng. Co. Ltd., TEL: 725-1883, TLX K27978
Intl	**Switzerland, Zurich**	Data Comp AG, TEL: 01-730-2165, TLX 53533

NCR

NCR Corporation
Microelectronics Division
8181 Byers Road
Miamisburg, Ohio 45342
513-866-7217
800-543-5618
TELEX: 241669 NCR NUMEN MSBG

Sales Office & Representatives

AL	**Huntsville**	Hughes Assocs., Inc., 205-533-9108
AZ	**Scottsdale**	BH&B Sales Inc., 602-994-4454
AZ	**Tucson**	B H & B Sales, 602-299-1508
AZ	**Tucson**	Wyle, 602-884-7082
CA	**Calabasas**	Wyle, 818-880-9001
CA	**Laguna Hills**	Micronix Integrated Systems, Inc., 714-770-1654
CA	**Rancho Cordova**	Wyle, 916-638-5282
CA	**San Diego**	Earle Associates, Inc., 619-278-5441
CA	**Santa Clara**	NCR Microelectronics Div., 408-727-6575
CA	**Santa Clara**	Quorum Technical Sales, 408-980-0812
CA	**Woodland Hills**	Interstate Mktg. Assocs., 818-883-7606
CO	**Aurora**	Electrodyne Inc., 303-695-8903
CO	**Boulder**	Design Engineering, Inc., 303-440-7997
CT	**Guilford**	Datamark, 203-453-0575
FL	**Deerfield Beach**	Aptek Microsystems, 305-421-8450
FL	**North Palm Beach**	Universal Marketing Sales Inc., 305-842-1440
FL	**Satellite Beach**	Universal Mktg. & Sales, Inc., 305-777-2581
GA	**Norcross**	Hughes Assocs., Inc., 404-662-1587
GA	**Warner Robins**	Hughes Assocs., Inc., 912-477-1889
IL	**Rolling Meadows**	Eagle Technical Sales, Inc., 312-991-0700
IN	**Carmel**	Technology Mktg. Corp., 317-844-8462
IN	**Ft. Wayne**	Technology Mktg. Corp., 219-432-5553
IA	**Cedar Rapids**	Electronic Technology Corp., 319-395-0567
KS	**Overland Park**	KEBCO, Inc., 913-541-8431
KS	**Wichita**	KEBCO, Inc., 316-733-1301
KY	**Louisville**	Technology Mktg. Corp., 502-499-7808
MD	**Gaithersburg**	Pioneer, 301-921-0660
MD	**Rockville**	Marktron, Inc., 301-251-8990
MA	**Lowell**	Custom Silicon, Inc., 617-454-4600
MA	**Woburn**	NCR Microelectronics Div., 617-933-0778
MI	**Livonia**	Luebbe Sales Co., 313-477-3131
MI	**Livonia**	Westbay & Assocs., 313-421-7460
MN	**Eden Prairie**	Aldridge Assoc., 612-944-8433
MS	**Corinth**	Hughes Assocs., Inc., 601-287-2915
MO	**St. Louis**	KEBCO, Inc., 314-576-4111
NM	**Albuquerque**	Nelco Elctrns., 505-293-1399
NY	**Camillus**	Ontec Electronic Mktg., 315-672-8409
NY	**Rochester**	Ontec Electronic Mktg., 716-464-8636
NY	**Valley Cottage**	LRC Assocs., 914-268-4435
NY	**Wappinger Falls**	Ontec Electronic Mktg., 914-462-7374
NC	**Cary**	Hughes Assocs., Inc., 919-467-7029;919-833-0323
OH	**Cincinnati**	Luebbe Sales Co., 513-891-5770
OH	**Cleveland**	Luebbe Sales Co., 216-333-0425
OH	**Columbus**	Luebbe Sales Co., 614-431-0474
OH	**Dayton**	Luebbe Sales Co., 513-294-0426
OK	**Tulsa**	ION Assocs., Inc., 918-664-0186
OR	**Portland**	Northwest Mktg. Assocs., 503-620-0441
PA	**Broomall**	TCA Assocs., 215-353-2022
PA	**King of Prussia**	Integrated Circuit Systems, Inc., 215-265-8690
PA	**Pittsburgh**	Luebbe Sales Co., 412-931-0414
TN	**Morristown**	Hughes Assocs., Inc., 615-581-5971
TN	**Nashville**	Hughes Assocs., Inc., 615-871-0908
TX	**Austin**	ION Assocs., Inc., 512-331-7251
TX	**Grand Prairie**	ION Assocs., Inc., 214-647-8225

NCR (Cont)

TX	**Houston**	ION Assocs., Inc., 713-977-4354
TX	**Houston**	Wyle, 713-879-9953
TX	**Plano**	NCR Microelectronics Div., 214-578-9113
UT	**Salt Lake City**	Electrodyne, 801-486-3801
WA	**Seattle**	Northwest Mktg. Assocs., Inc., 206-455-5846
Can	**Brampton, Ontario**	Cantec Reps., Inc., 416-791-5922
Can	**Ottawa, Ontario**	Cantec Reps., Inc., 613-725-3704
Can	**Ottawa, Ontario**	Ontario Centre for Microelectronics, 613-596-6690
Can	**Quebec**	Cantec Reps., Inc., 514-683-6131
Intl	**England, Berkshire**	Manhattan Skyline
Intl	**England, Maidenhead, Berkshire**	Manhattan Skyline, TEL: (0628) 39735
Intl	**Hong Kong, Kowloon**	PCI (HK), Ltd., TEL: 3-7431366
Intl	**Japan, Naka-gun**	NCR Japan, Ltd., TEL: 463-61-0900
Intl	**West Germany**	Manhattan Skyline Halbleiter, TEL: 06126-2090

Distributors

AL	**Huntsville**	Pioneer, 205-837-9300
AZ	**Phoenix**	Wyle Laboratories, 602-249-2232
CA	**El Segundo**	Wyle Laboratories, 213-322-8100
CA	**Irvine**	Wyle Laboratories, 714-863-9953
CA	**San Diego**	Wyle Laboratories, 619-565-9171
CA	**Santa Clara**	Wyle Laboratories, 408-727-2500
CO	**Thornton**	Wyle Laboratories, 303-457-9953
CT	**Norwalk**	Pioneer, 203-853-1515
FL	**Altamonte Springs**	Pioneer, 305-834-9090
FL	**Deerfield Beach**	Pioneer, 305-428-8877
GA	**Norcross**	Pioneer, 404-448-1711
IL	**Elk Grove Village**	Pioneer, 312-437-9680; 800-323-0360
IN	**Indianapolis**	Pioneer, 317-849-7300
MA	**Lexington**	Pioneer, 617-861-9200; 800-225-8344
MI	**Livonia**	Pioneer, 313-525-1800
MN	**Minnetonka**	Pioneer, 612-935-5444
NJ	**Pine Brook**	Pioneer, 201-575-3510
NY	**Fairport**	Pioneer, 716-381-7070
NY	**Hauppauge**	Pioneer, 516-921-8700
NY	**Vestal**	Pioneer, 607-748-8211
NC	**Charlotte**	Pioneer, 704-527-8188
OH	**Cleveland**	Pioneer, 216-587-3600
OH	**Dayton**	Pioneer, 513-236-9900
OR	**Hillsboro**	Wyle Laboratories, 503-640-6000
PA	**Horsham**	Pioneer, 215-674-4000
PA	**Pittsburgh**	Pioneer, 412-782-2300
TX	**Austin**	Pioneer, 512-835-4000
TX	**Austin**	Wyle Laboratories, 512-834-9957
TX	**Dallas**	Pioneer, 214-386-7300
TX	**Houston**	Pioneer, 713-988-5555
TX	**Richardson**	Wyle Laboratories, 214-235-9953
UT	**Salt Lake City**	Wyle Laboratories, 801-974-9953
WA	**Bellevue**	Wyle Laboratories, 206-453-8300
Can	**Montreal, PQ**	, 514-335-7697
Can	**Ottawa, ON**	, 613-226-7406
Can	**Toronto, ON**	, 416-736-1144

NCR Corporation

NCR Corporation
Engineering & Manufacturing
3718 N Rock Road
Wichita, Kansas 67226
316-688-8513

NEC Electronics

NEC Electronics Inc.
401 Ellis Street, P.O. Box 7241
Mountain View, California 94039-7241
415-960-6000
TWX: 910-379-6985

Specific product information:

Microcomputer Products	John Lezotte
Memory Products	John Marek
Gate Array/Semi-Custom Products	H. Hashimoto
Linear Products	Clay Bigelow

Literature:
Contact Nearest Regional Sales Office, Representative, or Distributor Location

Price and delivery:
Contact Nearest Regional Sales Office

Place an order:
Contact Nearest Regional Sales Office

Follow-up an order:
Contact Nearest Regional Sales Office, or Customer Service Department

All other information:
Contact Marketing Services Department

Sales Office & Representatives

AL	**Huntsville**	20th Century Marketing, 205-533-9281
AZ	**Scottsdale**	Fred Board Associates, 602-994-9388
AZ	**Tucson**	Fred Board Associates, 602-299-1508
CA	**Costa Mesa**	Phase II Technology, 714-556-4760
CA	**Cupertino**	NEC Regional Office, 408-446-0650
CA	**San Diego**	Mission Technology, 619-587-0288
CA	**San Jose**	Exis, 408-287-6680
CA	**Santa Ana**	NEC Regional Office, 714-546-0501
CA	**Woodland Hills**	Nec District, 818-716-1535
CO	**Golden**	Candal, Inc., 303-233-0155
CT	**Torrington**	Datatrack Eng. Inc., 203-482-6774
FL	**Altamonte Springs**	Semtronics, 305-831-8233
FL	**Clearwater**	Semtronics, 305-461-4675
FL	**Fort Lauderdale**	Semtronics, Inc., 305-731-2484
FL	**Ft. Lauderdale**	NEC Regional Office, 305-776-0682
GA	**Norcross**	Montgomery Marketing, 404-447-6124
GA	**Norcross**	Sales Office, 404-447-4409
IL	**Arlington Heights**	NEC Regional Office, 312-577-9090
IL	**Schaumburg**	Sieger Associates, 312-310-8844
IN	**Fort Wayne**	M/S Sales and Associates, 219-436-3023
IN	**Indianapolis**	M/S Sales and Associates, 317-257-8915
IA	**Cedar Rapids**	George Russell and Associates, 319-369-9134
KS	**Overland Park**	A.M.E. Sales, 913-262-3971
MD	**Columbia**	Professional Representatives, 301-992-7460
MD	**Hanover**	NEC District Office, 301-796-3944
MA	**Burlington**	NEC Regional Office, 617-272-1774
MA	**Woburn**	Compass Technology, 617-933-3336
MI	**Grand Rapids**	Miltimore Sales, 616-942-9721
MI	**Novi**	Miltimore Sales, 313-349-0260
MI	**Southfield**	NEC District Office, 313-559-4242
MN	**Bloomington**	George Russell and Associates, 612-854-1166
MN	**Bloomington**	NEC District Office, 612-854-4443
MO	**St. Charles**	AME Sales, 314-947-0333
NJ	**Ft. Lee**	Metro Logic Corporation, 201-592-8137
NJ	**Marlton**	B.G.R. Associates, 609-983-1020
NY	**Fairport**	Sales Office, 716-425-4590
NY	**Melville**	NEC District Office, 516-423-2500
NY	**Poughkeepsie**	NEC District Office, 914-452-4747
NY	**Rochester**	Elcom Sales, 716-385-1400
NY	**Syracuse**	ELCOM Sales, 315-685-8245
NC	**Cary**	Montgomery Marketing, 919-467-6319
OH	**Columbus**	Sales Office, 614-436-1778
OH	**Dayton**	KW Electronic Sales, Inc., 513-890-2150
OH	**Shaker Heights**	KW Electronic Sales, Inc., 216-491-9177
OH	**Worthington**	KW Electronic Sales, Inc., 614-888-0483
OR	**Beaverton**	Electronic Technical Sales Associates, 502-641-5180
OR	**Portland**	Sales Office, 503-245-1600

NEC Electronics (Cont)

PA	**Allison Park**	KW Electronic Sales, Inc., 412-487-4300
TN	**Knoxville**	20th Century Marketing, 615-690-1618
TX	**Austin**	NEC District, 512-346-9280
TX	**Austin**	Technical Marketing, 512-835-0064
TX	**Carrollton**	Technical Marketing, 214-387-3601
TX	**Dallas**	NEC Regional Office, 214-931-0641
TX	**Houston**	Technical Marketing, 713-783-4497
UT	**Salt Lake City**	Aspen Sales, 801-467-2401
WA	**Kirkland**	Electronic Technical Sales Associates, 206-827-8086
Can	**Concord, Ontario**	Kaytronics, 416-669-2262
Can	**Kanata, Ontario**	Kaytronics, 613-592-6606
Can	**Surrey, BC**	Kaytronics Western, 604-581-5005
Can	**Ville St. Pierre, Quebec**	Kaytronics, 514-367-0101
Intl	**Hato Rey**	Semtronics, Inc., TEL: 890-766-0770
PR	**Hato Rey**	Semitronics, 809-766-0770

Distributors

AL	**Huntsville**	Marshall Electronics, 205-881-9235
AL	**Huntsville**	RM Electronics, 205-852-1550
AZ	**Phoenix**	Sterling Electronics, 602-268-2121
AZ	**Phoenix**	Sterling Electronics, 602-268-2121
AZ	**Scottsdale**	Western Microtechnology, 602-948-4240
CA	**Canoga Park**	Marshall Industries, 818-999-5001, 818-999-6570
CA	**Chatsworth**	IEC, 213-988-2200
CA	**Cupertino**	Western Microtechnology, 408-725-1660
CA	**El Monte**	Marshall Industries, 213-442-7204
CA	**Irvine**	IEC, 714-660-1055
CA	**Irvine**	Marshall Industries, 714-660-0951
CA	**Irvine**	Ryno Electronics, 714-261-2500
CA	**Milpitas**	Marshall Industries, 408-943-6400
CA	**Rancho Cordova**	Marshall Industries, 916-635-9700
CA	**San Diego**	Marshall Industries, 619-578-9600
CA	**San Diego**	Ryno Electronics, 619-453-8430
CA	**San Jose**	Eric Electronics, 408-262-1111
CA	**San Jose**	Merit Electronics, 408-434-0800
CA	**Santee**	Mouser Electronics, 619-449-2300
CA	**Tustin**	Image Electronics, 714-730-0303
CO	**Denver**	IEC, 303-292-5121
CO	**Denver**	Marshall Industries, 303-427-1818
CO	**Englewood**	Sterling Electronics, 303-796-7338
CT	**Orange**	Milgray Electronics, 203-795-0711
CT	**Wallingford**	Cronin Electronics, 203-265-3134
CT	**Wallingford**	Marshall Industries, 203-265-3822
FL	**Ft. Lauderdale**	Hammond Electronics, 305-973-7103
FL	**Ft. Lauderdale**	Marshall Industries, 305-928-0661
FL	**Orlando**	Hammond Electronics, 305-849-6060
FL	**Orlando**	Marshall Industries, 305-841-1878
FL	**Tampa**	Reptron, 813-855-4656
FL	**Winter Park**	Milgray Electronics, 305-647-5747
GA	**Atlanta**	Milgray Electronics, 404-393-9666
GA	**Norcross**	Marshall Industries, 404-923-5750
GA	**Norcross**	Reptron Electronics, 404-446-1300
IL	**Chicago**	Nep Electronics, 312-625-8400
IL	**Elk Grove Village**	RM Electronics, 312-364-6622
IL	**Hoffman Estates**	IEC, 312-843-2040
IL	**Schaumburg**	Marshall Industries, 312-490-0155
IL	**Schaumburg**	Reptron Electronics, 312-882-1700
IN	**Indianapolis**	Marshall Industries, 317-297-0483
IN	**Indianapolis**	RM Electronics, 317-291-7110
KS	**Lenexa**	Marshall Industries, 913-492-3121
KS	**Overland Park**	Milgray Electronics, 913-236-8800
MD	**Columbia**	Milgray Electronics, 301-995-6169
MD	**Gaithersburg**	Almo Electronics Corp., 301-792-9197
MD	**Gaithersburg**	Marshall Industries, 301-840-9450
MA	**Burlington**	Marshall, 617-272-8200
MA	**Burlington**	Milgray Electronics, 617-272-6800
MA	**Hingham**	Sager Electronics, 617-749-6700
MA	**Hopkinton**	Interface Elctrns., 617-435-6858
MA	**Norwood**	Gerber Electronics, 617-769-6000, 710-336-1987
MA	**Woburn**	Sterling Electronics, 617-938-6200
MI	**Grand Rapids**	RM Electronics, 616-531-9300
MI	**Livonia**	Marshall Industries, 313-525-5850
MI	**Livonia**	Reptron Electronics, 313-525-2700
MN	**Minneapolis**	Industrial Components, 612-831-2666
MN	**Plymouth**	Marshall Industries, 612-559-2211
MO	**Kansas City**	LCOMP, 816-221-2400
MO	**Maryland Heights**	LCOMP, 314-291-6200
NJ	**Clifton**	J-MAR Electronics, 201-772-6400
NJ	**Fairfield**	Marshall Industries, 201-882-0320
NJ	**Marlton**	Milgray Electronics, 609-983-5010
NJ	**Mt. Laurel**	Marshall Industries, 609-234-9100
NJ	**Perth Amboy**	Sterling Electronics, 201-769-7000
NM	**Albuquerque**	Sterling Electronics, 505-884-1900
NY	**Endwell**	Marshall Industries, 800-252-5502
NY	**Farmingdale**	Milgray Elctrns., 516-391-3000
NY	**Hauppauge**	Marshall Industries, 516-273-2424
NY	**Pittsford**	Milgray Electronics, 716-385-9330
NY	**Rochester**	Marshall Industries, 716-235-7620
NY	**Rochester**	Rochester Radio Supply, 716-454-7800
NC	**Raleigh**	Marshall Industries, 919-878-9882
NC	**Raleigh**	Resco, 919-781-5700
OH	**Cleveland**	Milgray Electronics, 216-447-1520
OH	**Columbus**	Electronic Marketing, 614-299-4161
OH	**Dayton**	Marshall Industries, 513-236-8088
OH	**Highland Heights**	Electronic Marketing, 216-442-3441
OH	**Solon**	Marshall Industries, 216-248-1788
OH	**Worthington**	Reptron Electronics, 614-436-6675
OK	**Tulsa**	Sterling Electronics, 918-663-2410
OR	**Beaverton**	Marshall Industries, 503-644-5050
OR	**Beaverton**	Western Microtechnology, 503-629-2082
OR	**Tigard**	IEC, 503-639-9661
PA	**Philadelphia**	Almo Electronics, 215-698-4000
TX	**Austin**	Marshall Industries, 512-837-1991
TX	**Austin**	Sterling Electronics, 512-836-1341
TX	**Dallas**	Marshall Industries, 214-233-5200
TX	**Dallas**	Milgray Electronics, 214-248-1603
TX	**Dallas**	RM Electronics, 214-869-2080
TX	**Dallas**	Sterling Electronics, 214-243-1600
TX	**Houston**	Marshall Industries, 713-789-6600
TX	**Houston**	Sterling Electronics, 713-627-9800
VA	**Richmond**	Sterling Electronics, 804-226-2190
VA	**Sterling**	Sterling Electronics, 703-450-2373
WA	**Bellevue**	IEC/JACO, 206-455-2727
WA	**Bellevue**	Marshall Industries, 206-747-9100
WI	**Milwaukee**	Marsh Electronics, 414-475-6000
WI	**New Berlin**	Nep Electronics, 414-785-9100
WI	**New Berlin**	RM Electronics, 414-784-4420
Can	**Burnaby, BC**	RAE Industries, 604-291-8866
Can	**Calgary, Alberta**	MEMCO, 403-279-5425

NEC Electronics (Cont)

Can **Edmonton, Alberta**
RAE Industries, 403-451-4001
Can **Ottawa, Ontario**
Carsten Electronics, 613-729-5138
Can **Saskatoon, Saskatchewan**
RAE Industrial Electronics LTD., 306-933-2888
Can **Scarborough, Ontario**
Carsten Electronics, 416-495-9999
Can **St. Laurent, Quebec**
Carsten Electronics, 514-334-8321
Can **Surrey, BC**
MEMCO, 604-590-1553
Can **Winnepeg, Manitoba**
RAE Industrial Electronics LTD., 204-786-8401

Octagon Systems

Octagon Systems Corporation
6501 West 91st Avenue
Westminster, Colorado 80030
303-426-8540

Octal

Octal
450 East Middlefield Rd.
Mountain View, California 94043
415-962-8080

Ohio Scientific

Ohio Scientific
1333 S. Chillicothe Road
Aurora, Ohio 44202
216-562-2020

OKI Semiconductor

OKI Semiconductor, Inc.
650 N. Mary Ave.
Sunnyvale, California 94086
408-720-1900
800-336-3555
TELEX: 296687

Sales Office & Representatives

AZ **Scottsdale**
American Mktg., 602-948-2778
CA **Irvine**
Southwest Regional Sales Office, 714-752-1843
CA **Los Gatos**
Pro Assocs. Inc., 408-358-3861
CA **San Diego**
Littlefield & Smith, 619-455-0055
CA **Sherman Oaks**
Southwest Regional Sales, 818-990-3394
FL **Boca Raton**
Southeast Regional Sales Office, 305-394-6099
IL **Elk Grove Village**
John G. Twist Co. (Main Office), 312-593-0200
MD **Columbia**
Delta III Associates, 301-730-4700
MA **Stoneham**
Advanced Design Group, 617-279-0216
MA **Stoneham**
Northeast Regional Sales Office, 617-279-0293
MN **Bloomington**
Midwest Regional Sales Office, 612-835-0837
MO **St. Louis**
John G. Macke Co., 314-432-2830
NY **Poughkeepsie**
Northeast Regional Sales Office, 914-473-8044
OK **Tulsa**
Ammon & Rizos, 918-663-8788
OR **Beaverton**
General Elctrns., 503-641-5288
PA **Horsham**
Southeast Regional Sales Office, 215-674-9511
PA **Springhouse**
Deltratronics, 215-542-0250
TX **Austin**
Ammon & Rizos, 512-454-5131
TX **Houston**
Ammon & Rizos, 713-781-6240
TX **Richardson**
Ammon & Rizos, 214-644-5591
TX **Richardson**
South Central Regional Sales Office, 214-690-6868
WA **Renton**
General Elctrns., 206-228-9505
WI **Brookfield**
John G. Twist Co., 414-782-2670
Intl **Japan, Hong Kong**
OKI Elctrns., TEL: 5-263111
Intl **Japan, Tokyo**
OKI Elec. Ind. Co. Ltd., TEL: 011/81/3/454-2111
Intl **West Germany, Dusseldorf**
OKI Elec. Europe GMBH, TEL: 0049/211-592031, (0211) 597-9402

Distributors

AL **Huntsville**
ACM Inc., 205-881-5493
AL **Huntsville**
Contact Elctrns., 205-881-9321
AL **Huntsville**
R. O. Whitesell, 205-883-5110
AL **Huntsville**
RM Elctrns., 205-852-1550
AZ **Scottsdale**
Hall Electronics, Inc., 602-946-9977
CA **Agoura Hills**
Integrated Systems & Device Sales (ISDS), 818-707-2366
CA **Irvine**
Ryno Elctrns., 714-261-2500
CA **San Diego**
Ryno Elctrns. (Main Office), 619-453-8430
CA **San Jose**
Merit Electronics, 408-434-0800
CA **Santa Ana**
Integrated Systems & Device Sales (ISDS), 714-973-2162
CA **Santa Ana**
Pacesetter Elctrns. (Main Office), 714-779-5855
CA **Sunnyvale**
Pacesetter Elctrns., 408-734-5470
CA **Tustin**
Image Elctrns., 714-730-0303
CO **Wheat Ridge**
ACT/Diplomat, 303-422-9229
CT **Orange**
Milgray Elctrns., 201-795-0711
FL **Tampa**
Reptron Electronics, 813-855-4656
FL **Winter Park**
Milgray Elctrns., 305-647-5747
GA **Atlanta**
Milgray Elctrns., 404-393-9666
GA **Duluth**
ACM Inc., 404-447-5499
IL **Arlington Heights**
Reptron Elctrns., 312-364-6622
IL **Lombard**
RM Elctrns., 312-882-1700
IN **Fort Wayne**
R. O. Whitesell, 219-432-5591
IN **Indianapolis**
R. O. Whitesell, 317-359-9283
IN **Indianapolis**
RM Elctrns., 317-291-7110
IN **Kokomo**
R. O. Whitesell, 317-457-9127
KS **Olathe**
C-Tron, Inc., 913-829-0073
KS **Overland Park**
Milgray Elctrns., 913-236-8800
KY **Louisville**
R. O. Whitesell, 502-426-7696
MD **Columbia**
Milgray Elctrns., 301-995-6169
MA **Burlington**
Milgray Elctrns., 617-272-6800
MA **Hopkinton**
Interface Electronics Corp., 617-435-6858
MI **Grand Blanc**
R. O. Whitesell, 313-695-0770
MI **Grand Rapids**
R. O. Whitesell, 616-942-5420
MI **Grand Rapids**
R.M. Elctrns., 616-531-9300
MI **Livonia**
Reptron Elctrns. (Main Office), 313-525-2700
MI **Southfield**
R. O. Whitesell, 313-559-5454
MI **St. Joseph**
R. O. Whitesell, 616-983-7337
MN **Eden Prairie**
Rockmore Sales, 612-941-1390
MN **St. Paul**
Gopher Elctrns. Co., 612-483-4450
NH **Hudson**
C & H Elctrns., 603-882-1133
NJ **Audubon**
Action Electronics
NJ **Marlton**
Milgray Elctrns., 609-983-5010
NJ **Medford**
J.J.D. Assoc., 609-953-1101
NY **Farmingdale**
Milgray Elctrns., 516-420-9800
NY **Hicksville**
Lorac Sales, 516-681-8746
NY **Rochester**
Rochester Radio Supply, 716-454-7800
NY **Syracuse**
T-Squared, 315-463-8592
NY **Victor**
T-Squared, 716-924-9101
NC **Raleigh**
J & B Sales, 919-878-8600
NC **Raleigh**
Resco-Raleigh, 919-781-5700, 800-334-9250
OH **Cincinnati**
R. O. Whitesell, 513-521-2290
OH **Cleveland**
Milgray Elctrns., 216-447-1520
OH **Cleveland**
R. O. Whitesell, 216-447-9020
OH **Columbus**
R. O. Whitesell, 614-888-9396
OH **Dayton**
R. O. Whitesell, 513-298-9546
OH **Worthington**
Reptron Elctrns., 614-436-6675
OR **Wilsonville**
Zepher-Ragon, 503-682-2929
PA **Pittsbugh**
R. O. Whitesell, 412-963-6161

OKI Semiconductor (Cont)

TN	**Knoxville** R. O. Whitesell, 615-694-9476
TX	**Austin** ACT/Diplomat, 512-452-5254
TX	**Dallas** ACT/Diplomat, 214-980-1888
TX	**Dallas** RM Elctrns., 214-869-2080
TX	**Houston** ACT/Diplomat, 713-975-8447
UT	**Salt Lake City** A.C.T./Diplomat, 801-486-4134
WA	**Seattle** Zepher-Ragon, 206-241-1980
WI	**New Berlin** RM Elctrns., 414-784-4420
Can	**Rexdale, Ontario** SOURCE Electronics Limited, 416-675-6235
Can	**Scarborough, Ontario** Carsten Electronics Ltd., 416-495-7705

Omnibyte

Omnibyte Corporation
245 W. Roosevelt Road, Building 1-5
West Chicago, Illinois 60185
312-231-6880

Sales Office & Representatives

Intl	**France, Cedex** Auriema France, TEL: 876-11-03

Distributors

Intl	**Australia, Victoria** Unitronix Div. of Dalsan Pty Ltd., TEL: 613 561-5934
Intl	**Columbia, Bogota** Latindata, TEL: 2432663
Intl	**England, Norwich** Anglia Technology, Ltd., TEL: 0603-616221
Intl	**Holland, Almere-Haven** DeGidts & Feldman, TEL: 31-3240-14014
Intl	**India, Hyderabad** Computer Overseas Corp., TEL: 31543-31216
Intl	**Italy** Winline, TEL: TLX 322326
Intl	**Japan** Microboards, Inc., TEL: 0473 (28) 6005
Intl	**Korea, Seoul** Gimm-Young Co., TEL: 720-5630
Intl	**Kowloon, Hong Kong** Nanco Electronics Supply, Ltd., TEL: 3-335/21
Intl	**New Zealand, Christchurch** E. C. Gough Ltd., TEL: (03) 798-740
Intl	**South Africa, Randburg** Promilect (Pty) Ltd., TEL: (011) 789-1400
Intl	**Spain, Barcelona** Lana Sarrate, S.A., TEL: 204-44-50
Intl	**Sweden, Solina** Master Data AB, TEL: 08-83 01 55
Intl	**Switzerland, Zurich** Micro-Tech., TEL: (01) Volketswil 945-14-34
Intl	**Taiwan, Taipei** Micro Products Co., Ltd., TEL: TLX 27802 Zephyr
Intl	**West Germany, Munich** Ernst Rauscher mBH., TEL: (089) 89-8061

Omnicad

Omnicad
1000 Pittsford Victor Rd.
Pittsford, New York 14534
716-385-8500

Onset

Onset Computer Corporation
199 Main Street, P.O. Box 1016
North Falmouth, Massachusetts 02556
617-563-2267

Optical Electronics

Optical Electronics Inc.
P.O. Box 11140
Tucson, Arizona 85734
602-624-8358
TWX: 910-952-1283

Orion Instruments

Orion Instruments
702 Marshall St.
Redwood City, California 94063
415-361-8883

Pacific Microcircuits

Pacific Microcircuits Ltd.
1645 140th St.
White Rock, British Columbia, Canada V48A481
604-536-1886

Pacific Microcomputers

Pacific Microcomputers, Inc.
160 Chesterfield Drive
Cardiff, California 92007
619-436-8649

Panasonic

Panasonic Industrial Company/Electronic Components Division
Matsushita Electric Corporation of America
1 Panasonic Way
Secaucus, New Jersey 07094
201-348-7000
TWX: 710-992-8920

Sales Office & Representatives

AL	**Huntsville** REP, Inc., 205-881-9270
AZ	**Scottsdale** Semi Systems Arizona, Inc., 602-991-1151
AR	**Little Rock** Erickson Sales, 501-225-7379
CA	**Cypress** Panasonic Ind.
CA	**Newport Beach** West, Inc., 714-852-9211
CA	**Pleasanton** Moulthrop Sales, Inc., 415-463-0450
CA	**San Diego** ICO Electronics, 619-487-2740
CA	**Woodland Hills** Interstate Marketing Associates, 818-883-7606
CO	**Englewood** Component Sales, 303-779-8060
CT	**Madison** Conti-Younger Associates, Inc., 203-245-1136
FL	**Fernpark** Sales Engineering Concepts, Inc., 305-834-6225
FL	**Lighthouse Point** Sales Engineering Concepts, Inc., 305-781-4800
FL	**Pompano Beach** Panasonic
GA	**Norcross** Panasonic Ind.
GA	**Tucker** REP, Inc., 404-938-4358
IL	**Arlington Heights** Panasonic
IL	**Elmhurst** Circuit Sales, Inc., 312-833-2242
IN	**Indianapolis** Marketing Engineers, Inc., 317-872-5665
IN	**Indianapolis** Panasonic Ind.
LA	**Chalmett** Erickson Sales
MD	**Ellicott City** Marketing Technology, 301-465-5944
MA	**Burlington** Conti-Younger Associates, Inc., 617-273-1582
MA	**Peabody** Panasonic Co. Len St. Pierre
MI	**Brighton** Electronic Sources, Inc., 313-227-3598
MI	**Farmington** Panasonic
MN	**Eden Prairie** Electro Mark, Inc., 612-944-5850
MO	**Blue Springs** K K B & Company, 816-229-0001
MO	**St. Louis** K K B & Company, 314-647-2400
NJ	**Medford** Jack McCoy, Inc., 609-953-0770
NJ	**Parlin** JMR Sales, 201-254-8484
NJ	**Secaucus** Panasonic Inc. Co.
NM	**Albuquerque** Semi Systems Arizona, Inc., 505-898-3273
NY	**Endicott** Tech Mark, 607-748-7473
NY	**Mendon** Tech Mark, Inc., 716-624-3840
NY	**Utica** Tech Mark, 315-733-0575
NC	**Cary** Panasonic
NC	**Charlotte** Rep Inc., 704-563-5554
NC	**Raleigh** REP, Inc., 919-851-3007
OH	**Cleveland** Del Steffen & Associates, 216-461-8333
OH	**Dayton** Del Steffen & Associates, 513-293-3145
OH	**Lexington** Del Steffen & Associates, 419-884-2313
OK	**Broken Arrow** Erickson Sales, 918-453-4276
OR	**Tigard** Electronic Sources, 503-684-0040
PA	**Carnegie** Del Steffen & Associates, 412-276-7366
PA	**Downingtown** Jack McCoy, Inc., 215-363-0350
TN	**Jefferson City** REP, Inc., 615-475-9012

Panasonic (Cont)

TX	**Dallas**	Erickson Sales, 214-739-5833
TX	**Houston**	Erickson Sales, 713-266-1604
TX	**Irving**	Panasonic
UT	**Salt Lake City**	Component Sales, 801-268-8440
VA	**Lynchburg**	Marketing Technology, 804-384-6459
WA	**Bellevue**	Electronic Sources, 206-451-3500
Can	**Concord, Ontario**	Astec Components, Ltd., 416-669-4022
PR	**San Juan**	Electronic Tech Sales, 809-720-1300

Distributors

AL	**Huntsville**	Resistacap, Inc., 205-883-4270
AK	**Ft. Smith**	Carlton-Bates, 501-646-8201
AK	**Little Rock**	Carlton-Bates, 501-562-9100
AK	**Pine Bluff**	Carlton-Bates, 501-535-1354
AK	**Springdale**	Carlton-Bates, 501-756-5012
AZ	**Phoenix**	Sterling Electronics, 602-268-2121
CA	**Burbank**	TAW Electronics, 213-846-3911
CA	**Chatsworth**	Shelley Electronics, 213-998-3333
CA	**Hayward**	Allied Electronics, 415-487-5250
CA	**Irvine**	Ratel Electronics, 714-768-0855
CA	**Los Angeles**	Richey-Western, 213-820-3777
CA	**San Diego**	Richey-Western, 619-271-4511
CA	**San Diego**	Shelley Electronics, 619-453-7133
CA	**San Jose**	Cypress Electronics, 408-945-8400
CA	**San Jose**	Ratel Electronics, 408-946-4300
CA	**Santa Clara**	Richey-Western, 408-727-7411
CA	**Sunnyvale**	Capsco Sales, 408-734-3020
CO	**Denver**	Denver/Wintronics, 303-431-7161
CO	**Denver**	Integrated Electronics, 303-292-6121
CT	**E. Haven**	J. V. Electronics, 203-469-2321
FL	**Longwood**	Intertec Components, 305-834-7777
FL	**Pompano Beach**	Components South, 305-971-0350
GA	**Augusta**	Dixie Electronic Inc., 404-772-2055
GA	**Cumming**	Pan American Electronics, 404-577-2114
GA	**Norcross**	Graham Electronics, 404-662-0923
IL	**Chicago**	Prehler, Electronics Inc., 312-384-6100
IL	**Elgin**	Allied Electronics, 312-697-8200
IL	**Palatine**	Ohm Electronics, 312-359-5500
IN	**Fort Wayne**	Graham Electronic Supply, 219-423-3422
IN	**Indianapolis**	Graham Electronics, 317-634-8202
IA	**Cedar Rapids**	Deeco, Inc., 319-365-7551
LA	**Metairie**	Sterling Electronics, 504-887-7610
LA	**Shreveport**	Carlton-Bates, 318-636-9975
MD	**Columbia**	General Radio, 301-997-6337
MD	**Timonium**	Zebra Electronics, 301-252-6576
MA	**Billerica**	A. W. Mayer Co., Inc., 617-229-2255
MA	**Canton**	Impact Sales, 617-821-1500
MA	**Mendon**	Add Electronics, 617-478-4200
MA	**Wilmington**	R.C. Components Inc., 617-273-1860
MI	**Farmington Hills**	Prehler Electronics Inc., 313-473-7200
MN	**Minneapolis**	Industrial Components, Inc., 612-831-2666
MN	**Thief River Falls**	Digi-Key Corp., 218-681-6674
MO	**St. Louis**	Olive Electronics Inc., 314-426-4500
NJ	**Bellmawr**	Mid Atlantic Elctrns. Corp., 609-931-5303
NJ	**Camden**	General Radio, 609-964-8560
NJ	**Plainfield**	Mars Electronics, 201-757-4332
NJ	**Pompton Plains**	Zebra Electronics, 201-839-9040
NJ	**Pompton Plains**	Zebra Electronics, 201-839-9040
NM	**Albuquerque**	Sterling Electronics, 505-884-1900
NY	**Bohemia**	Zebra Electronics, 516-563-2160
NY	**Buffalo**	Summit Distributors, 716-887-2800
NY	**E. Syracuse**	Add Electronics, 315-437-0300
NY	**Farmingdale**	Pride Elctrns., 516-293-4020
NY	**Rochester**	Summit Distributors, 716-334-8110
NY	**Rome**	Rome Electronics, 315-337-5400
NC	**Charlotte**	Dixie Electronics, 704-377-5413
NC	**Raleigh**	Dixie Electronics, 919-872-5235
NC	**Winston-Salem**	Dixie Electronics, 919-724-5961
OH	**Cincinnati**	Hughes Peters Inc., 513-351-2000
OH	**Columbus**	Hughes Peters Inc., 614-294-5351
OH	**Middleburg Heights**	Prehler Electronics Inc., 216-243-5510
OK	**Tulsa**	Carlton-Bates, 918-250-1626
OK	**Tulsa**	Sterling Electronics, 918-663-2410
OR	**Beaverton**	Almac Electronics, 503-629-8090
PA	**McKean**	Advacom, Inc., 814-476-7774
SC	**Charleston**	Dixie Electronics, 803-554-7515
SC	**Columbia**	Dixie Electronics, 803-779-5332
SC	**Florence**	Dixie Electronics, 803-669-8201
SC	**Greenville**	Dixie Electronics, 803-297-1430
TN	**Gray**	Dixie Electronics, 615-477-3838
TN	**Memphis**	Carlton-Bates, 901-365-3539
TN	**Nashville**	Carlton-Bates, 615-244-3562
TN	**Nashville**	Carlton-Bates, 615-244-3562
TX	**Austin**	Sterling Electronics, 512-836-1341
TX	**Dallas**	Computer Components Corp., 214-239-0271
TX	**Dallas**	Sterling Electronics, 214-243-1600
TX	**Houston**	Sterling Electronics, 713-627-9800
TX	**Texarkana**	Carlton-Bates, 214-792-6923
UT	**Midvale**	Ratel Electronics, 801-562-2600
VA	**Richmond**	Sterling Electronics, 804-226-2190
WA	**Bellevue**	Almac Electronics, 206-643-9992
WI	**Mequon**	Taylor Electric, 414-241-4321
Can	**Mississauga, Ontario**	Prelco Electronics Ltd., 416-678-0401
Can	**Montreal, Quebec**	Prelco Electronics Ltd., 514-389-8051
Can	**Nepean, Ontario**	Prelco Electronics, 613-726-1800
Can	**Rexdale**	Elec. Supplies, 416-741-4000

Panatech

Panatech
3375 Scott Boulevard
Sant Clara, California 95054
408-727-7700

Paragon Technologies

Paragon Technologies
365 Lennon Lane
Walnut Creek, California 94598
415-934-1400

Personal CAD Systems

(P-CAD)
981 University Ave.
Los Gatos, California 95030
800-858-6384
CA 408-354-7193
TELEX: 278866
Specific product information:
Ken Lowe

Sales Office & Representatives

AL	**Huntsville**	W.A. Brown Instruments, 800-942-9224, 205-883-8660
AZ	**Scottsdale**	BFA Corporation-West, 602-994-5400
AZ	**Tucson**	BFA Corporation, 602-323-3115
CA	**Costa Mesa**	Ward Davis Associates, 714-556-0955
CA	**Redondo Beach**	Ward Davis Associates, 213-643-6977
CA	**San Diego**	Ward Davis Associates, 619-292-1000
CA	**Santa Clara**	Ward Davis Associates, 408-245-3700

Personal CAD Systems (Cont)

CO **Englewood**
BFA-East, 303-771-7474
CT **Wallingford**
Pat Jenks Assoc., 203-265-9939
FL **Ft. Lauderdale**
W.A. Brown Instruments, 305-776-4800
FL **Melbourne**
W.A. Brown Instruments, 305-723-0766
FL **Orlando**
W.A. Brown Instruments, 305-425-5505
FL **Tampa**
W.A. Brown Instruments, 813-963-7735
GA **Norcross**
W.A. Brown Instruments, 404-441-2980
IL **Arlington Heights**
Dytec Central, 312-394-3380
IN **Indianapolis**
Dytec Central, 317-247-1316
KS **Los Gatos, California**
Personal CAD Systems, Inc., 408-354-7193
MA **Woburn**
Pat Jenks Assoc., 617-938-0488
MI **Pontiac**
EQS Systems, Inc., 313-338-2280, 313-961-3042
MN **St. Paul**
Dytec North, 612-645-5816
NM **Albuquerque**
BFA Corporation-East, 505-292-1212
NM **Las Cruces**
BFA Corporation, 505-524-9693
NY **Great Neck**
RTI, 516-829-3770
NY **N. Syracuse**
NACO Electronics Corp., 315-699-2651
NC **Durham**
W.A. Brown Instruments, 919-479-5200, 800-942-9224
OH **Chesterland**
EQS Systems, Inc., 216-729-2222
OH **Daytona**
EQS Systems, Inc., 513-236-7676, 513-294-2476
OK **Tulsa**
Data Marketing Assoc., 918-599-8315
TN **Knoxville**
W.A. Brown Instruments, 800-942-9224
TX **Austin**
Data Marketing Assoc., 512-443-7722
TX **Dallas**
Data Marketing Assoc., 214-661-0300
TX **Dallas**
Regional Office, 214-490-0905/06
TX **Houston**
Data Marketing Assoc., 713-780-2511
TX **San Antonio**
Data Marketing Assoc., 512-342-3031
UT **Salt Lake City**
BFA Corporation-West, 801-265-1771
VA **McLean**
Creative Marketing Assoc., 703-442-9100
WI **Elm Grove**
Dytec Central, 414-784-9686
Can **Burnaby, British Columbia**
Interfax Systems, Inc., 416-671-3920
Can **Mississauga, Ontario**
Interfax Systems, Inc., 416-671-3920
Can **Nepean, Ontario**
Interfax Systems, Inc., 613-726-8888
Can **St. Laurent, Quebec**
Interfax Systems, Inc., 514-336-0392
Intl **Australia, Victoria**
Quest Automation Pty. Ltd., TEL: (03) 277-7444
Intl **Austria, Wein**
Walter Rekirsch Elektronische, TEL: (0222) 23-55-55
Intl **Belgium, Brussels**
Air-Parts International B.V., TEL: (32) 2-2418130
Intl **England, Bucks**
MicroSystem Services, Ltd., TEL: 44-49-441661
Intl **France, Buc**
MB Electronique, TEL: 333-956-81-31
Intl **Israel, Tel Aviv**
RDT Electronics, TEL: (972) (3) 483211-9
Intl **Italy, Milano**
Sistrel, TEL: 02/6181893
Intl **Japan, Chiyoda-Ku Tokyo**
Softpac International, TEL: 03293-1581
Intl **Japan, San Jose, CA**
Softpac International, TEL: 408-297-1833
Intl **New Zealand, Wellington**
Walker Scientific, TEL: 722-302
Intl **Norway, Asker**
Teleinstruments A/S, TEL: (472) 789460
Intl **South Africa, Brooklyn**
Integrated Circuit Design Centre Pty. Ltd., TEL: 9021 420-2952
Intl **Spain, Madrid**
Instrumatic Espanola, S.A., TEL: (1) 455 81 12
Intl **Sweden, Stockholm**
Teleinstruments A/S, TEL: 46 8 380 370
Intl **Switzerland, Ruschlikon**
Instrumatic, TEL: (01) 724-1410
Intl **The Netherlands, Alphen aanden Rijin**
Air-Parts International B.V., TEL: 31 01720-29300
Intl **West Germany, Grafelfing**
Instrumatic GmbH, TEL: 49-89-85-2063

Phoenix Data Systems

Phoenix Data Systems
80 Wolf Rd.
Albany, New York 12205
518-459-6202

Pico Design

Pico Design, Inc.
1333 Lawrence Expressway, Suite 340
Santa Clara,, California 95051
408-249-8090

Plessey Microsystems

Plessey Microsystems
One Blue Hill Plaza
Pearl River, New York 10965
914-735-4661

Plessey Solid State

Plessey Solid State
3 Whatney
Irvine, California 92718
714-951-5212
TELEX: 595-1930

Application engineering:
ext. 182
Literature:
Toni LaVertu
Price and delivery:
Sandy Mateviesko .... ext 129
Follow-up an order:
Raquel Pendergraft 130

Polycore Electronics

Polycore Electronics Inc.
1107 Tourmaline Drive
Newbury Park, California 91320
805-499-6777

Precision Monolithics

Precision Monolithics Inc.
1500 Space Park Drive
P.O. Box 58020
Santa Clara, California 95052-8020
408-727-9222
TWX: 910-338-0528

Specific product information:
ext. 385
Application engineering:
ext. 385
Literature:
ext. 186
Price and delivery:
ext. 163
Follow-up an order:
ext. 163
All other information:
ext. 385

Sales Office & Representatives

AL **Huntsville**
EMA, 205-830-4030
AZ **Scottsdale**
PMI Sales Office, 602-941-1946
CA **Los Angeles**
PMI Sales Office, 714-666-0140
CA **San Diego**
L & S Assocs., 619-455-0055
CA **Santa Clara**
PMI Sales Office, 408-727-6616
CO **Littleton**
PMI Sales Office, 303-979-8533
CT **Unionville**
PMI Sales Office, 203-673-9995
FL **Altamonte Springs**
Lawrence Assocs., 305-339-3855
FL **Altamonte Springs**
PMI Sales Office, 305-788-1403
FL **Boca Raton**
Lawrence Assocs., 305-368-7373
FL **Clearwater**
Lawrence Assocs., 813-584-8110
FL **Melbourne**
Lawrence Assocs., 305-724-8294
GA **Roswell**
EMA, 404-992-7240
IL **Schaumburg**
PMI Sales Office, 312-885-8440
IN **Carmel**
Technology Mktg. Corp., 317-844-8462
IN **Ft. Wayne**
Technology Mktg. Corp., 219-432-5553
KS **Olathe**
Rush & West Assocs., 913-764-2700
KY **Louisville**
Technology Mktg. Corp., 502-499-7808
MD **Baltimore**
Conroy Sales, 301-296-2444
MA **Natick**
PMI Sales Office, 617-655-8900
MI **Brighton**
PMI Sales Office, 313-231-2964
MO **Ballwin**
Rush & West Assocs., 314-394-7271
NJ **Fairfield**
Hall-Mark Electronics, 201-575-4415
NM **Albuquerque**
B.F.A. Corp., 505-292-1212

Precision Monolithics (Cont)

NY	**East Syracuse** L-MAR Assocs., Inc., 315-437-7779
NY	**Hicksville** J-Square Mktg., Inc., 516-935-3200
NY	**Rochester** L-MAR Assocs., Inc., 716-323-1000
NC	**Pineville** EMA, 704-541-2628
NC	**Winston-Salem** EMA, 919-784-7304
OH	**Cleveland** Del Steffen & Assocs., 216-461-8333
OH	**Dayton** Del Steffen & Assocs., 513-293-3145
OH	**Lexington** Del Steffen & Assocs., 419-884-2313
OR	**Portland** Northwest Mktg., 503-620-0441
PA	**Horsham** PMI Sales Office, 215-675-7600
PA	**Pittsburgh** Del Steffen & Assocs., 412-276-7366
TN	**Donelson** EMA, 615-883-1414
TN	**Jonesboro** EMA, 615-753-8081
TX	**Dallas** PMI Sales Office, 800-223-6147
TX	**Houston** PMI Sales Office, 800-223-6147
WA	**Bellevue** Northwest Mktg., 206-455-5846
Can	**Kanata, Ontario** Source Elctrns. Ltd., 613-592-5392
Can	**Rexdale, Ontario** Source Elctrns. Ltd., 416-675-6235
Can	**Winnepeg, Manitoba** Hi Tech Sales Ltd., 204-786-3343
Intl	**Australia, Fortitude Valley** RIFA, TEL: 07-832-3700
Intl	**Australia, Hurstville** RIFA, TEL: 02-570-8122
Intl	**Australia, Victoria** RIFA, TEL: 03-480-1211
Intl	**Austria, Vienna** Ing. Otto Folger, TEL: 0222/ 43 26 39
Intl	**Denmark, Bagsvaerd-Copenhagen** E. Friss-Mikkelsen A/S, TEL: 02-986333
Intl	**Eastern Europe, Vienna** Dipl Ing., TEL: 0222-24 71 37
Intl	**Finland, Helsinki** Insele Oy, TEL: 90-75 06 00
Intl	**France, Paris** Ohmic S.A., TEL: 01/203 9633
Intl	**Germany, Stuttgart** Bourns GmbH, TEL: 0711/21740
Intl	**Greece, Athens** Germanis Co., TEL: 01-821 5825
Intl	**Israel, Tel Aviv** Rapac Elctrns. Ltd., TEL: 03-47 71 15
Intl	**Italy, Milan** Technic S.r.L., TEL: 02/569 57 46
Intl	**Japan, Tokyo** Nippon PMI Corp., TEL: (03) 234-1411
Intl	**Norway, Lillestrom** A/s Kjell Bakke, TEL: 02-83-0220
Intl	**Portugal, Lisbon** Telectra S.A.R.L., TEL: 19/68 60 72
Intl	**Spain, Madrid** Soneico S.A., TEL: 01-409-4634
Intl	**Sweden, Taeby** Bexab Electronik AB, TEL: 08-768 0560
Intl	**Switzerland, Baar** Bourns (Schweiz) AG, TEL: 042/33 33 33
Intl	**Taiwan** Morrihan Int'l. Corp.
Intl	**The Netherlands, Benelux, Voorburg** Bourns (Nederland) B.V., TEL: 070-87 54 04
Intl	**Turkey, Yenisehir - Ankara** Nel, Nukleer Elektronik Ltd., TEL: 041-30 15 10
Intl	**United Kingdom, Middlesex** Bourns Electronics, Ltd., TEL: 01/572 6531
Intl	**Yugoslavia, Zagreb** Jugomineral, TEL: 041-42-3746

Distributors

AL	**Huntsville** Hall-Mark Elctrns., 205-837-8700
AL	**Huntsville** Pioneer Elctrns., 205-837-9300
AZ	**Phoenix** Hall-Mark Elctrns., 602-437-1200
AZ	**Tempe** Anthem Elctrns., 602-966-6600
AZ	**Tempe** Bell Industries, 602-966-7800
CA	**Chatsworth** Anthem Elctrns., 818-700-1000
CA	**Garden Grove** Bell Industries, 714-220-0681
CA	**Gardena** Bell Inds., 213-515-1800
CA	**Los Alamitos** SEMI-DICE, Inc., 213-594-4631
CA	**Roseville** Bell Inds., 916-969-3100
CA	**San Diego** Anthem Elctrns., 619-453-9005
CA	**San Diego** Bell Industries, 619-268-1277
CA	**San Diego** Hall Mark Assocs., 619-268-1201
CA	**San Jose** Anthem Elctrns., 408-946-8000
CA	**San Jose** Hall Mark Elctrns., 408-946-0900
CA	**Sunnyvale** Bell Inds., 408-734-8570
CA	**Thousand Oaks** Bell Industries, 805-499-6821
CA	**Tustin** Hall Mark, 714-669-4700
CO	**Englewood** Anthem Elctrns., 303-790-4500
CO	**Englewood** Hall-Mark Elctrns., 303-790-1662
CO	**Wheatridge** Bell Inds., 303-424-1985
CT	**Norwalk** Pioneer, 203-853-1515
FL	**Clearwater** Hall Mark Elctrns., 813-530-4543
FL	**Fort Lauderdale** Hall-Mark Elctrns., 305-971-9280
FL	**Orlando** Hall-Mark Elctrns., 305-855-4020
FL	**Orlando** Pioneer Elctrns., 305-834-9090
GA	**Norcross** Hallmark Elctrns., 404-447-8000
GA	**Norcross** Pioneer Elctrns., 404-448-1711
IL	**Elk Grove Village** Pioneer Elctrns, 312-437-9680
IL	**Woodale** Hall-Mark Elctrns., 312-860-3800
IN	**Indianapolis** Pioneer Elctrns, 317-849-7300
KS	**Lenexa** Hall-Mark Elctrns., 913-888-4747
MD	**Baltimore** Hall-Mark Elctrns., 301-988-9800
MD	**Gaitherberg** Hall-Mark Elctrns., 301-921-0660
MA	**Lexington** Pioneer, 617-861-9200
MA	**Norwood** Gerber Elctrns., 617-769-6000
MA	**Westborough** Future Elctrns., 617-366-2400
MA	**Woburn** Hall-Mark Elctrns., 617-935-9777
MI	**Livonia** Pioneer Elctrns., 313-525-1800
MN	**Bloomington** Hall-Mark Elctrns., 612-854-3223
MN	**Minneapolis** Merit Elctrns., 612-546-5383
MN	**Minnetonka** Pioneer Elctrns., 612-935-5444
MO	**Earth City** Hall-Mark Elctrns., 314-291-5350
NJ	**Fairfield** Hall-Mark Elctrns., 201-575-4415
NJ	**Mt. Laurel** Hall-Mark Elctrns., 609-235-1900
NJ	**Pine Brook** Pioneer Elctrns., 201-227-1262
NM	**Albuquerque** Bell Inds., 505-292-2700
NY	**Fairport** Pioneer Elctrns., 716-381-7070
NY	**Ronkonkoma** Hall-Mark Elctrns., 516-737-0600
NY	**Vestal** Pioneer Elctrns., 607-748-8211
NY	**Woodbury** Pioneer, 516-921-8700
NC	**Charlotte** Pioneer Elctrns., 704-527-8188
NC	**Raleigh** Hall-Mark Elctrns., 919-872-0712
OH	**Cleveland** Pioneer Elctrns, 216-587-3600
OH	**Dayton** Pioneer Elctrns, 513-236-9900
OH	**Solon** Hall-Mark Elctrns., 216-349-4632
OH	**Worthington** Hall-Mark Elctrns., 614-888-3313
OK	**Tulsa** Hall-Mark Elctrns., 918-665-3200
OR	**Portland** Bell Industries, 503-241-4115
PA	**Horsham** Pioneer Elctrns, 215-674-4000
PA	**Pittsburgh** Pioneer Elctrns, 412-782-2300
TX	**Austin** Hall-Mark Elctrns., 512-258-8848
TX	**Dallas** Hall-Mark Elctrns., 214-341-1147
TX	**Dallas** Pioneer Elctrns., 214-386-7300
TX	**Houston** Hall-Mark Elctrns., 713-781-6100
TX	**Houston** Pioneer Elctrns., 713-988-5555
UT	**Salt Lake City** Anthem Elctrns., 801-973-8555
UT	**Salt Lake City** Bell Inds., 801-972-6969
WA	**Bellevue** Bell Inds., 206-747-1515
WA	**Redmond** Anthem Elctrns., 206-881-0850
WI	**New Berlin** Hall-Mark Elctrns., 414-797-7844
Can	**Calgary, Alberta** Future Elctrns., 403-259-6408
Can	**Downsview, Ontario** Future Elctrns. Corp., 416-638-4771
Can	**Ottawa, Ontario** Future Elctrns. Corp., 613-820-8313
Can	**Pointe Claire, Quebec** Future Elctrns., Inc., 514-694-7710
Can	**Vancouver, B.C.** Future Elctrns., 604-438-5545

Precision Monolithics (Cont)

Can	**Vancouver, British Columbia**	Intek Elctrns. Ltd., 604-324-6831

Prime Computer

Prime Computer
Prime Park Way
Natick, Massachusetts 01760
617-655-8000

Pro-Log

Pro-Log Corporation
2411 Garden Road
Monterey, California 93940
408-372-4593
TWX: 910-360-7082

Distributors

Intl	**Australia**	Pro Log Australia Pty Ltd., TEL: 03-836-3533
Intl	**Austria, Obachgasse**	Walter Rekirsch Elecktronische, TEL: (0222) 23 55 55
Intl	**Chile, Santiago**	Interlog Electronics Ltd., TEL: 2253689
Intl	**Denmark, Copenhagen**	E. V. Johanssen Elektronik A-S, TEL: 183 90 22
Intl	**France**	YREL, TEL: (3) 956-81-42
Intl	**Germany, Buckeburg**	Spezial-Elctrn. KG, TEL: 0-57-22 203106
Intl	**Germany, Ellwagen**	Spezial-Elctrn. KG, TEL: 07961-4047
Intl	**Germany, Munich**	Spezial-Elctrn. KG, TEL: 089/530387
Intl	**India, Bombay**	American Components, Inc., TEL: 222-999
Intl	**Israel, Givatayim**	Elm Int'l Electronics, TEL: (03) 774-041,2,3,4
Intl	**Italy, Milano**	Technitron, TEL: 02-8242112
Intl	**Italy, Rome**	Technitron, Srl, TEL: 6-8395841-2
Intl	**Japan, Tokyo**	Syscon Corporation, TEL: (03) 863-7688
Intl	**Korea, Seoul**	Stel Corp., TEL: 722-9007
Intl	**Mexico**	Electronica Steren, TEL: 518-6700
Intl	**New Zealand, Auckland**	GTS Engineering Ltd., TEL: 546-745
Intl	**New Zealand, Wellington**	GTS Eng. Ltd., TEL: 04-726-701
Intl	**Norway, Oslo**	Elektronix AS, TEL: 02-567-140
Intl	**Singapore**	Intl. Control Sys., TEL: 2788288
Intl	**South Africa**	Transvaal Inst. Pty. Ltd., TEL: (011) 673-6754
Intl	**Spain, Barcelona**	Unitronics, TEL: 2392655
Intl	**Spain, Madrid**	Unitronics, S.A., TEL: 242-52-04
Intl	**Sweden, Tyresco**	Logtek Electronik AB, TEL: (8) 770-07-25
Intl	**Switzerland, Zurich**	Max Meier Elektronik AG, TEL: 01/624-444
Intl	**Thailand, Bangkok**	Kriangpat Co. Ltd., TEL: 251-6777
Intl	**The Netherlands, B.V.**	Intelligent Systems, TEL: 076 224182
Intl	**United Kingdom, Camberley**	Technitron, Inc., U.K., TEL: Camberley 26517

Proximity

Proximity Technology Inc.
3511 NE 22nd Avenue
Fort Lauderdale, Florida 33308
305-566-3511
TELEX: 160054 PRXMTY

Quay

Quay Corporation
P.O. Box 783
Eatontown, New Jersey 07724
201-542-7340
Specific product information:
Consult Factory for nearest Distributor/Representative

Racal-Redac

Racal-Redac
4 Liberty Way
Westford, Massachusetts 01886
617-692-4900

Raytheon Semiconductor

Raytheon Company
Semiconductor Division
350 Ellis Street
Mountain View, California 94039-7016
415-968-9211
TWX: 910-379-6481

Specific product information:

Linear	J. Shupenis
Digital	G. Jones
Discrete	G. Jones
LSI/Memory	Jack Von Den Heuvel
Gate Array	D. McCoy

Price and delivery:
Local Field Sales Office
Place an order:
Local Field Sales Office
Follow-up an order:
Customer Service

Sales Office & Representatives

AL	**Huntsville**	Macro Mktg. Assocs., 205-883-9630
AZ	**Scottsdale**	Semper Fi Sales Co., 602-991-4601
CA	**Irvine**	Raytheon Regional Sales Office, 714-833-9042
CA	**Irvine**	Raytheon Regional Sales Office, 714-833-9042
CA	**Mtn. View**	Raytheon Regional Sales Office, 415-966-7636
CA	**Mtn. View**	Raytheon Regional Sales Office, 415-966-7636
CA	**San Diego**	Earle Associates, Inc., 619-278-5441
CO	**Littleton**	Simpson Assoc., 303-794-8381
CO	**Littleton**	Simpson Assocs., Inc., 303-794-8381
CT	**Guilford**	Data Mark, Inc., 203-454-0575
FL	**Hamonte Springs**	Raytheon Regional Sales Office, 305-339-4820
GA	**Norcross**	Macro Marketing, 404-662-5580
IL	**Des Plaines**	Raytheon Regional Sales Office, 312-297-5540
IL	**Elk Grove Village**	Carlson Elctrn. Sales Co., 312-956-8240
IN	**Indianapolis**	J & W Sales, 317-842-3740
IN	**Indianapolis**	J & W Sales, 317-842-3740
IA	**Cedar Rapids**	Carlson Elctrn. Sales, 319-377-6341
KS	**Wichita**	DLE Electronics, 316-744-2126
MD	**Towson**	Arbotec Assoc. Inc., 301-825-0775
MA	**Lexington**	Raytheon Regional Sales Office, 617-861-1830
MA	**Waltham**	Dynasel Assoc., 617-890-6777
MN	**Eden Prairie**	Aldridge Assoc. Inc., 612-944-8433
MN	**Minneapolis**	Raytheon Regional Sales Office, 612-920-7935
MO	**St. Louis**	John G. Macke Co., 314-432-2830
NY	**Buffalo**	Pi'Tronics, Inc., 716-876-0549
NY	**Commack**	ERA, Inc., 516-543-0510
NY	**Hauppauge**	Raytheon Regional Sales Office, 516-582-3646
NY	**Hauppauge**	Raytheon Regional Sales Office, 516-582-3646
NY	**Syracuse**	Pi'Tronics, Inc., 315-455-7346
NC	**Garner**	J & B Sales, 919-772-3546
OH	**Beachwood**	Thompson & Assocs., Inc., 216-831-6277
OH	**Dayton**	Thompson & Assocs., Inc., 515-435-7733
PA	**Erdenheim**	OMNI Sales, 215-233-4600
PA	**Wayne**	Raytheon Regional Sales Office, 215-687-8300
TX	**Austin**	Logic I, 512-459-1297
TX	**Houston**	Logic I, 713-879-1566
TX	**Richardson**	Logic 1, 214-234-0765
TX	**Richardson**	Logic I, 214-234-0765
UT	**Midvale**	Simpson Assoc., 801-566-3691
WI	**Milwaukee**	Carlson Elctrns. Sales, 414-476-2790
Can	**Brampton, Ontario**	Cantec Reps. Inc., 416-791-5922
Can	**Dollard des Ormeaux**	Cantec Reps. Inc., 514-683-6131
Can	**Ottawa, Ontario**	Cantec Reps. Inc., 613-725-3704
Intl	**France, Le Plessis Robinson**	Raytheon Semiconductor France, TEL: 631 06 76
Intl	**Germany, Munchen**	Raytheon HALBLEITER GmbH, TEL: 089/539693
Intl	**Japan, Tokyo**	New Japan Radio Co., Ltd., TEL: 502 2331
Intl	**United Kingdom, Essex**	Raytheon Semiconductor, TEL: (0494) 450327

Distributors

AZ	**Phoenix**	Arizona Comps. Co., 602-269-5655
AZ	**Phoenix**	Kierulff Elctrns., 602-437-0750
AZ	**Phoenix**	Wyle Distribution Grp., 602-249-2232
CA	**Anaheim**	Zeus Comps., Inc., 213-924-0454, 714-632-6880
CA	**Chatsworth**	Arrow Electronics, 213-701-7500
CA	**El Segundo**	Wyle Distribution Grp., 213-322-8100
CA	**Irvine**	Wyle Distribution Group, 714-851-9958

Raytheon Semiconductor (Cont)

CA	**Irvine**	Wyle Distribution Grp., 714-641-1600
CA	**Los Angeles**	Kierulff Elctrns., 213-725-0325
CA	**San Diego**	Arrow Elctrns., 619-565-4800
CA	**San Diego**	Kierulff Elctrns., 619-278-2122
CA	**San Diego**	Wyle Distribution Grp., 619-565-9171
CA	**Santa Clara**	Wyle Distribution Grp., 408-727-2500
CA	**Sunnyvale**	Arrow Elctrns., 408-745-6600
CA	**Sunnyvale**	Bell Inds., 408-734-8570
CA	**Tustin**	Kierulff Elctrns., 714-731-5711
CO	**Denver**	Arrow Elctrns., 303-758-2100
CO	**Thornton**	Wyle Distribution Grp., 303-457-9953
CO	**Wheatridge**	Bell Inds., 303-424-1985
CT	**Wallingford**	Arrow Elctrns., 203-265-7741
CT	**Wallingford**	Kierulff Electronics, 203-265-1115
FL	**Ft. Lauderdale**	Kierulff Electronics, 305-486-4004
FL	**Orlando**	Hammond Electronics, 305-849-6060
FL	**Palm Bay**	Arrow Elctrns., 305-725-1480
FL	**St. Petersburg**	Kierulff Elctrns., 813-576-1966
GA	**Norcross**	Arrow Elctrns., 404-449-8252
GA	**Norcross**	Kierulff Electronics
IL	**Elk Grove Village**	Kierulff Electronics, 312-640-0200
IL	**Rosemont**	Advent Elctrns., 312-298-4210
IL	**Schaumburg**	Arrow Electronics, 312-397-3440
IN	**Indianapolis**	Arrow Elctrns., 317-243-9353
IA	**Cedar Rapids**	Advent Elctrns., 319-363-0221
MD	**Baltimore**	Arrow Elctrns., 301-247-5200
MD	**Timonium**	Zebra Elctrns., 301-252-6576, 800-638-1103
MA	**Billerica**	Kierulff Elctrns., 617-667-8331
MA	**Lexington**	Zeus Components, 617-863-8800
MA	**Newton**	The Greene-Shaw Co., Inc., 617-969-8900, 800-225-8804
MA	**Woburn**	Arrow Elctrns., 617-933-8130
MI	**Ann Arbor**	Arrow Elctrns., 313-971-8220
MI	**Livonia**	Reptron/Mich., 313-525-2700
MN	**Edina**	Arrow Elctrns., 612-830-1800
MN	**Edina**	Kierulff Elctrns., 612-941-7500
MO	**Maryland Heights**	Kierulff Electronics, 314-739-0855
MO	**St. Louis**	Arrow Electronics, 314-567-6888
NH	**Manchester**	Arrow Electronics, 602-668-6968
NJ	**Camden**	Genl. Radio Supply Co., Inc., 609-964-8560
NJ	**Fairfield**	Arrow Elctrns., 201-575-5300
NJ	**Moorestown**	Arrow Elctrns., 609-235-1900
NJ	**Nutley**	Vantage, 201-667-1840
NM	**Albuquerque**	Alliance Electronics, 505-292-3360
NM	**Albuquerque**	Arrow Elctrns., Inc./Elctrns. Distribution Div., 505-243-4566
NY	**Buffalo**	Summit Distrs., Inc., 716-884-3450
NY	**E. Syracuse**	Add Electronics Group, 315-437-0300
NY	**Farmingdale**	SAI, 516-293-2710
NY	**Fishkill**	Intercept Electronics Corp., 914-896-7535
NY	**Hauppauge**	Arrow Electronics, 516-231-1000
NY	**Liverpool**	Arrow Elctrns., 315-652-1000
NY	**Melville**	Arrow Elctrns., 516-391-1626
NY	**Plainview**	ACI Elctrns. Corp., 516-293-6630
NY	**Port Chester**	Zeus Comps., Inc., 914-937-7400
NY	**Rochester**	Arrow Elctrns., 716-275-0300
NY	**Woodbury**	Harvey/Military, 516-921-8700
NC	**Raleigh**	Arrow Electronics, 919-876-3132
NC	**Winston-Salem**	Arrow Elctrns., 919-725-8711
OH	**Centerville**	Arrow Elctrns., 513-435-5563
OH	**Columbus**	Reptron/Ohio, 614-436-6675
OH	**Solon**	Arrow Elctrns., 216-248-3990
OK	**Tulsa**	Kierulff Electronics, 918-252-7537
OR	**Hillsboro**	Wyle Distribution Group, 503-640-6000
PA	**Monroeville**	Arrow Elctrns., 412-856-7000
TX	**Austin**	Arrow Electronics, 512-835-4180
TX	**Austin**	Kierulff Electronics, 512-835-2090
TX	**Dallas**	Arrow Elctrns., 214-386-7500
TX	**Dallas**	Kierulff Electronics, 214-343-2400
TX	**Dallas**	Trevino Elctrns. Inc., 214-357-5446
TX	**Houston**	Kierulff Electronics, 713-530-7030
UT	**Salt Lake City**	Bell Inds., 801-972-6969
UT	**Salt Lake City**	Wyle Distribution Group, 801-974-9953
WA	**Bellevue**	Arrow Elctrns., 206-643-4800
WA	**Bellevue**	Wyle Distribution Grp., 206-453-8300
WA	**Kent**	Kierulff Elctrns., 206-575-4420
WI	**Oak Creek**	Arrow Elctrns., 414-764-6600
WI	**Waukesha**	Kierulff Electronics, 414-784-8160
Can	**Downsview, Ontario**	Future Elctrns., 416-663-5563
Can	**Montreal, Quebec**	Cesco Elctrns., Ltd., 514-735-5511
Can	**Ottawa, Ontario**	Cesco Elctrns., Ltd., 613-226-6903
Can	**Pointe Claire, Quebec**	Future Elctrns., 514-694-7710
Can	**Quebec City, Quebec**	Cesco Elctrns., Ltd., 418-687-4231
Can	**Toronto, Ontario**	Cesco Elctrns., Ltd., 416-661-0220

RCA

RCA Solid State Division
Box 3200
Somerville, New Jersey 08876
201-685-6000
TWX: 710-480-9333

Sales Office & Representatives

AL	**Huntsville**	Electronic Sales, 205-533-1735
AL	**Huntsville**	RCA, 205-533-5200
AZ	**Scottsdale**	RCA, 602-947-7235
CA	**Los Altos**	RCA, 415-948-8996
CA	**San Diego**	CK Assocs., 619-279-0420
CA	**Santa Clara**	RCA, 408-748-0933
CA	**Sherman Oaks**	RCA, 818-783-3955
CA	**Tustin**	RCA, 714-832-5302
CO	**Englewood**	RCA Corp., 303-740-8441
FL	**Apopka**	G. F. Bohman Assoc., Inc., 305-886-1882
FL	**Ft. Lauderdale**	G. F. Bohman Assoc., Inc., 305-979-0008
FL	**Lake Park**	RCA, 305-626-6350
GA	**Atlanta**	RCA, 404-452-2355
GA	**Norcross**	Electronic Sales, 404-448-6554
IL	**Itasca**	RCA, 312-250-0070
IN	**Carmel**	RCA, 317-267-6375
KS	**Overland Park**	Electri-Rep, 913-649-2168
KS	**Overland Park**	RCA, 913-345-2224
MA	**Newton**	RCA, 617-969-0141
MI	**Birmingham**	RCA, 313-644-1151
MN	**Minneapolis**	Comprehensive Tech. Sales, 612-888-7011
MN	**Minneapolis**	RCA, 612-835-2004
MO	**Maryland Heights**	Electri Rep, 314-878-8209
NJ	**Iselin**	RCA, 201-750-9000
NJ	**Mt. Laurel**	RCA, 609-338-5042
NJ	**Perth Amboy**	Astrorep, Inc., 201-826-8050
NY	**Babylon**	Astrorep, Inc., 516-422-2500
NY	**Fairport**	RCA, 716-223-5240
NY	**Fayetteville**	Foster & Wager, Inc., 315-637-5427
NY	**Rochester**	Foster & Wager, Inc., 716-385-7744
NC	**Cary**	Electronic Sales, 919-467-8486

RCA (Cont)

NC	**Cary**	RCA Corp., 714-481-4221
OH	**Columbus**	RCA, 614-436-0036
OH	**Dayton**	Lyons Corp., 513-278-0714
OH	**Richfield**	Lyons Corp., 216-659-9224
OR	**Tigard**	Vantage Corp., 503-620-3280
TX	**Dallas**	RCA, 214-733-0800
UT	**Midvale**	Simpson Assocs., 801-566-3691
VA	**Arlington**	RCA, 703-558-4161
WA	**Bellevue**	Vantage Corp., 206-455-3460
Can	**Burnaby, British Columbia**	Hi Tech Sales, 604-524-2131
Can	**Calgary, Alberta**	RCA Inc., 403-291-1469
Can	**Canada, Calgary, AB**	Hi-Tech Sales, Ltd., 403-229-6990
Can	**Ottawa, Ontario**	RCA Inc., 613-728-0031, 613-728-0032
Can	**Winnepeg, Manitoba**	Hi Tech Sales Ltd., 204-786-3343
Intl	**Argentina, Buenos Aires**	Ramiro E. Podetti Reps., TEL: 54 393-3919
Intl	**Belgium, Brussels**	RCA S.A., TEL: 32-02/720.89.80
Intl	**France, Velizy**	RCA S.A., TEL: (33) 3946.56.56
Intl	**Hong Kong, Kowloon**	RCA Intl. Ltd., TEL: 852-3-723-6339
Intl	**Italy, Rozzano**	RCA SpA, TEL: 39-2-824-20-09
Intl	**Japan, Tokyo**	RCA Purchasing Co., TEL: 81-3-44433-4649
Intl	**Mexico, Mexico City**	RCA S.A. de C.V./Solid State Div., TEL: (905)399-7228
Intl	**Singapore, Singapore**	RCA Intl Ltd., TEL: 652224156/2224157
Intl	**Spain, Madrid**	RCA S.A., TEL: 01/442 11 00
Intl	**Sweden, Solna**	RCA Intl. LTD, TEL: 46 08/83 42-25
Intl	**Taiwan, Taipei**	RCA Corp./Solid State Div., TEL: (886) 2/7169310
Intl	**United Kingdom, Sunbury-on-Thames, Middlesex**	RCA LTD, TEL: (44) 093 27 85511
Intl	**West Germany, Munchen**	RCA GmbH, TEL: 49 89/5026014-19
Intl	**West Germany, Ostfildern (Kemnat)**	RCA GmbH, TEL: 49 0711/454001
Intl	**West Germany, Quickborn**	RCA GmbH, TEL: (49) 4106/613-0

Distributors

AL	**Huntsville**	Hamilton Avnet Elctrns., 205-837-7210
AZ	**Phoenix**	Kierulff Elctrns., Inc., 602-243-4101
AZ	**Phoenix**	Schweber Elctrns., 602-997-4874
AZ	**Phoenix**	Sterling Elctrns., Inc., 602-268-2121
AZ	**Phoenix**	Wyle Electronics Marketing Group, 602-249-2232
AZ	**Tempe**	Hamilton Avnet Elctrns., 602-231-5100
CA	**Calabasas**	Wyle Electronics Marketing Group, 818-880-9001
CA	**Canoga Park**	Schweber Electronics Corp., 818-999-4702
CA	**Chatsworth**	Arrow Elctrns., Inc., 213-701-7500
CA	**Chatsworth**	Avnet Elctrns., 818-700-2600
CA	**Costa Mesa**	Avnet Elctrns., 714-754-6051
CA	**Costa Mesa**	Hamilton Electro Sales, 714-641-4107
CA	**Culver City**	Hamilton Electro Sales, 213-558-2121
CA	**Cypress**	Kierulff Electronics, Inc., 714-220-6300
CA	**El Segundo**	Wyle Electronics Marketing Group, 213-322-8100
CA	**Irvine**	Schweber Elctrns. Corp., 714-863-0200
CA	**Irvine**	Wyle Elctrns. Marketing Group, 714-863-9953
CA	**Ontario**	Hamilton Avnet Electronics, 714-989-4602
CA	**Rancho Cordova**	Wyle Electronics Marketing Group, 916-638-5282
CA	**Sacramento**	Hamilton Avnet Elctrns., 916-920-3150
CA	**San Diego**	Arrow Elctrns., Inc., 619-741-3411
CA	**San Diego**	Hamilton Avnet Elctrns., 619-571-7510
CA	**San Diego**	Kierulff Elctrns., Inc., 619-278-2112
CA	**San Diego**	Schweber Electronics Corp., 619-450-0454
CA	**San Diego**	Wyle Electronics Marketing Group, 619-565-9171
CA	**San Jose**	Kierulff Electronics, Inc., 408-971-2600
CA	**San Jose**	Schweber Electronics Corp., 408-946-7171
CA	**Santa Clara**	Wyle Elctrns. Marketing Group, 408-727-2500
CA	**Sunnyvale**	Arrow Elctrns., Inc., 408-745-6600
CA	**Sunnyvale**	Hamilton Avnet Elctrns., 408-743-3300
CA	**Tustin**	Kierulff Elctrns., Inc., 714-731-5711
CO	**Aurora**	Arrow Elctrns., Inc., 303-696-1111
CO	**Englewood**	Hamilton Avnet Elctrns., 303-740-1000
CO	**Englewood**	Kierulff Elctrns., Inc., 303-790-4444
CO	**Thornton**	Wyle Electronics Marketing Group, 303-457-9953
CT	**Danbury**	Hamilton Avnet Elctrns., 203-797-2800
CT	**Danbury**	Schweber Elctrns. Corp., 203-748-7080
CT	**Orange**	Milgray Elctrns., 203-795-0711
CT	**Wallingford**	Arrow Elctrns., Inc., 203-265-7741
CT	**Wallingford**	Kierulff Elctrns., Inc., 203-265-1115
FL	**Deerfield**	Arrow Elctrns., Inc., 305-429-8200
FL	**Ft. Lauderdale**	Hamilton Avnet Elctrns., 305-971-2900
FL	**Ft. Lauderdale**	Kierulff Electronics, Inc., 305-486-4004
FL	**Hollywood**	Schweber Elctrns. Corp., 305-927-0511
FL	**Orlando**	Chip Supply, 305-298-7100
FL	**Palm Bay**	Arrow Elctrns., Inc., 305-725-1480
FL	**St. Petersburg**	Hamilton Avnet Elctrns., 813-576-3930
FL	**St. Petersburg**	Kierulff Elctrns., Inc., 813-576-1966
FL	**Winter Park**	Hamilton Avnet Electronics, 305-628-3888
FL	**Winter Park**	Milgray Elctrns., Inc., 305-647-5747
GA	**Norcross**	Arrow Elctrns., Inc., 404-449-8252
GA	**Norcross**	Hamilton Avnet Elctrns., 404-447-7503
GA	**Norcross**	Kierulff Electronics, Inc., 404-447-5252
GA	**Norcross**	Schweber Elctrns. Corp., 404-449-9170
IL	**Bensenville**	Hamilton Avnet Elctrns., 312-860-7700
IL	**Chicago**	Newark Elctrns., 312-784-5100
IL	**Elk Grove Village**	Schweber Elctrns. Corp., 312-364-3750
IL	**Itasca**	Kierulff Elctrns., Inc., 312-640-0200
IL	**Schaumburg**	Arrow Elctrns., Inc., 312-397-3440
IN	**Carmel**	Hamilton Avnet Elctrns., 317-844-9333
IN	**Indianapolis**	Arrow Elctrns., Inc., 317-243-9353
IN	**Indianapolis**	Graham Elctrns. Supply, Inc., 317-634-8202
KS	**Overland Park**	Hamilton Avnet Elctrns., 913-888-8900
KS	**Overland Park**	Milgray Electronics, Inc., 913-236-8800
MD	**Columbia**	Hamilton Avnet Elctrns., 301-995-3500
MD	**Columbus**	Arrow Elctrns., Inc., 301-995-0003
MD	**Gaithersburg**	Schweber Elctrns. Corp., 301-840-5900
MD	**Linthicum**	Kierulff Electronics, Inc., 301-636-5800
MD	**Savage**	Pyttronic Inds., Inc., 301-792-0780
MD	**Timonium**	Zebra Elctrns., Inc., 301-252-6576
MA	**Bedford**	Schweber Elctrns. Corp., 617-275-5100
MA	**Beverly**	Hybrid Components Inc., 617-927-5820
MA	**Billerica**	A.W. Mayer Co., 617-229-2255
MA	**Billerica**	Kierulff Elctrns., Inc., 617-667-8331
MA	**Salem**	Ser Tech, 617-745-2450
MA	**Waltham**	Sterling Elctrns., Inc., 617-894-6200
MA	**Woburn**	Arrow Elctrns., Inc., 617-933-8130
MA	**Woburn**	Hamilton Avnet Elctrns., 617-935-9700
MI	**Ann Arbor**	Arrow Elctrns., Inc., 313-971-8220
MI	**Grand Rapids**	Hamilton Avnet Elctrns., 616-243-8805
MI	**Livonia**	Hamilton Avnet Elctrns., 313-522-4700
MI	**Livonia**	Schweber Elctrns. Corp., 313-525-8100
MN	**Edina**	Arrow Elctrns., Inc., 612-830-1800
MN	**Edina**	Kierulff Elctrns., Inc., 612-941-7500
MN	**Edina**	Schweber Elctrns. Corp., 612-941-5280

RCA (Cont)

MN	**Minnetonka**	Hamilton Avnet Elctrns., 612-932-0600
MO	**Earth City**	Hamilton Avnet Elctrns., 314-344-1200
MO	**Maryland Heights**	Kierulff Elctrns., Inc., 314-739-0855
MO	**St. Louis**	Arrow Elctrns., Inc., 314-567-6888
NH	**Manchester**	Arrow Elctrns., Inc., 603-668-6968
NJ	**Cherry Hill**	Hamilton Avnet Elctrns., 609-424-0110
NJ	**Fairfield**	Arrow Elctrns., Inc., 201-575-5300
NJ	**Fairfield**	Hamilton Avnet Elctrns., 201-575-3390
NJ	**Fairfield**	Kierulff Elctrns., Inc., 201-575-6750
NJ	**Fairfield**	Schweber Elctrns. Corp., 201-227-7880
NJ	**Marlton**	Arrow Elctrns., Inc., 609-596-8000
NJ	**Mt. Laurel**	Kierulff Electronics, Inc., 609-235-1444
NM	**Albuquerque**	Arrow Elctrns., Inc., 505-243-4566
NM	**Albuquerque**	Hamilton Avnet Elctrns., 505-765-1500
NM	**Albuquerque**	Sterling Elctrns., Inc., 505-884-1900
NY	**Buffalo**	Summit Distrs., Inc., 716-884-3450
NY	**East Syracuse**	Hamilton Avnet Elctrns., 315-437-2641
NY	**Farmingdale**	Milgray Elctrns., Inc., 516-391-3000
NY	**Hauppauge**	Arrow Electronics, Inc., 516-231-1000
NY	**Hauppauge**	Hamilton Avnet Elctrns., 516-231-9800
NY	**Liverpool**	Arrow Elctrns., Inc., 315-652-1000
NY	**Melville**	Arrow Elctrns., 516-391-1640
NY	**Rochester**	Arrow Elctrns., Inc., 716-427-0300
NY	**Rochester**	Hamilton Avnet Elctrns., 716-475-9130
NY	**Rochester**	Schweber Elctrns. Corp., 716-424-2222
NY	**Westbury**	Schweber Elctrns. Corp., 516-334-7474
NC	**Raleigh**	Arrow Elctrns., Inc., 919-876-3132
NC	**Raleigh**	Hamilton Avnet Elctrns., 919-878-0810
NC	**Raleigh**	Kierulff Elctrns., Inc., 919-872-8410
NC	**Raleigh**	Schweber Elctrns. Corp., 919-876-0000
OH	**Beachwood**	Schweber Electronics Corp., 216-464-2970
OH	**Centerville**	Arrow Elctrns., Inc., 513-435-5563
OH	**Cleveland**	Kierulff Elctrns., Inc., 216-587-6558
OH	**Columbus**	Hughes-Peters, Inc., 614-294-5351
OH	**Dayton**	Hamilton Avnet Elctrns., 513-433-0610
OH	**Solon**	Arrow Elctrns., Inc., 216-248-3990
OH	**Warrensville Hts.**	Hamilton Avnet Elctrns., 216-831-3500
OH	**Westerville**	Hamilton Avnet Electronics, 614-882-7004
OK	**Tulsa**	Kierulff Elctrns., Inc., 918-252-7537
OK	**Tulsa**	Sterling Electronics, Inc., 918-622-8000
OR	**Hillsboro**	Wyle Electronics Marketing Group, 503-640-6000
OR	**Lake Oswego**	Hamilton Avnet Elctrns., 503-635-8157
OR	**Portland**	Arrow Electronics, Inc., 503-684-1690
PA	**Horsham**	Schweber Elctrns. Corp., 215-441-0600
PA	**Monroeville**	Arrow Elctrns., Inc., 412-856-7000
PA	**Philadelphia**	Herbach & Rademan, Inc., 215-426-1700
TX	**Austin**	Arrow Electronics, Inc., 512-835-4180
TX	**Austin**	Hamilton Avnet Elctrns., 512-837-8911
TX	**Austin**	Kierulff Elctrns., Inc., 512-835-2090
TX	**Austin**	Sterling Elctrns., Inc., 512-836-1341
TX	**Carrollton**	Arrow Elctrns., Inc., 214-380-6464
TX	**Dallas**	Kierulff Elctrns., Inc., 214-343-2400
TX	**Dallas**	Schweber Elctrns. Corp., 214-661-5010
TX	**Dallas**	Sterling Elctrns., Inc., 214-243-1600
TX	**Houston**	Arrow Elctrns., Inc., 713-530-4700
TX	**Houston**	Hamilton Avnet Elctrns., 713-975-3515
TX	**Houston**	Kierulff Elctrns., Inc., 713-530-7030
TX	**Houston**	Schweber Elctrns. Corp., 713-784-3600
TX	**Houston**	Sterling Elctrns., Inc., 713-627-9800
TX	**Irving**	Hamilton Avnet Elctrns., 214-659-4111
TX	**Richardson**	Wyle Elctrns. Marketing Group, 214-235-9953
UT	**Salt Lake City**	Hamilton Avnet Elctrns., 801-972-2800
UT	**Salt Lake City**	Kierulff Elctrns., Inc., 801-973-6913
UT	**Salt Lake City**	Wyle Electronics Marketing Group, 801-974-9953
WA	**Bellevue**	Arrow Elctrns., Inc., 206-643-4800
WA	**Bellevue**	Hamilton Avnet Elctrns., 206-453-5874
WA	**Bellevue**	Wyle Electronics Marketing Group, 206-453-8300
WA	**Kirkland**	Robert E. Priebe Co., 206-821-4695
WA	**South Kent**	Kierulff Elctrns., Inc., 206-575-4420
WI	**Mequon**	Taylor Elec. Co., 414-241-4321
WI	**New Berlin**	Hamilton Avnet Elctrns., 414-784-4510
WI	**Oak Creek**	Arrow Elctrns., Inc., 414-764-6600
WI	**Waukesha**	Kierulff Elctrns., Inc., 414-784-8160
Can	**Burnaby, British Columbia**	R.A.E. Indl. Elctrns., Ltd., 604-291-8866
Can	**Calgary, Alberta**	Hamilton Avnet Elec., 403-230-3586
Can	**Calgary, Alberta**	L. A. Varah, Ltd., 403-255-9550
Can	**Downsview, Ontario**	Arrow/Cesco, 416-661-0220
Can	**Hamilton, Ontario**	L. A. Varah, Ltd., 416-561-9311
Can	**Mississauga, Ontario**	Hamilton Avnet (Canada) Ltd., 416-677-7432
Can	**Montreal, Quebec**	Arrow/Cesco, 514-735-5511
Can	**Nepean, Ontario**	Hamilton Avnet (Canada) Ltd., 613-226-1700
Can	**St. Laurent, Quebec**	Hamilton Avnet (Canada) Ltd., 514-331-6443
Can	**Vancouver, British Columbia**	L. A. Varah, Ltd., 604-873-3211
Can	**Willowdale, Ontario**	Electro Sonic, Inc., 416-494-1666
Can	**Winnipeg, Manitoba**	L. A. Varah, Ltd., 204-633-6190
Intl	**Argentina, Buenos Aires**	Eneka S.A.I.C.F.I., TEL: 31-3363
Intl	**Argentina, Buenos Aires**	Radiocom S.A., TEL: 551-2780
Intl	**Argentina, Buenos Aires**	Tecnos S.R.L., TEL: 37-0239
Intl	**Australia, Rydalmere N.S.W.**	A W A Microelectronics
Intl	**Australia, Waterloo, N.S.W.**	Amtron Tyree Pty. Ltd.
Intl	**Austria, Vienna**	T.V.G., TEL: (0222) 8294510
Intl	**Bangladesh, Dacca**	Electronic Engineers & Consultants Ltd.
Intl	**Belgium, Brussels**	Inelco Belgium S.A., TEL: 02/216 01 60
Intl	**Belgium, Bruxelles**	Inelco (Belgium) S.A., TEL: 02/216.01.60
Intl	**Brazil, Manaus**	Commercial Bezerra Ltda., TEL: 322-5363
Intl	**Brazil, Sao Paulo**	Panamericana Commercial Importadora Ltda., TEL: 222-3211
Intl	**Chile, Santiago**	Industria de Radio y Television S.A. (IRT), TEL: 510081
Intl	**Chile, Santiago**	Raylex Ltda., TEL: 749835
Intl	**Colombia, Bogota**	Electronica Moderna, TEL: 282286
Intl	**Colombia, Bogota**	Miguel Antonio Pena Pena Y Cia. S. En C., TEL: 243-7317
Intl	**Costa Rica, San Jose**	J. G. Valldeperas, S.A., TEL: 223614
Intl	**Denmark, Ballerup**	Tage Olsen A/S, TEL: 02/65 81 11
Intl	**Dominican Republic, Santo Domingo**	Humberto Garcia, C. por A., TEL: 682-3645
Intl	**Ecuador, Guayaquil**	Elecom, S.A., TEL: 307786
Intl	**Egypt, Cairo**	Sakrco Enterprises, TEL: 744440
Intl	**El Salvador, San Salvador**	Radio Parts, S.A., TEL: 21-3019
Intl	**El Salvador, San Salvador**	Raio Electrica, S.A., TEL: 21-5609
Intl	**Ethiopia, Addis Ababa**	General Trading Agency, TEL: 132718 137275
Intl	**Finland, Kerava**	Telercas OY, TEL: 0/248.055
Intl	**France, Antony**	Almex S.A., TEL: (1) 666 21 12
Intl	**France, Levallois-Perret**	Radio Equipments Antares S.A., TEL: (1) 758 11 11
Intl	**France, Sevres**	Tekelec Airtronic S.A., TEL: (1) 534.75.35
Intl	**France, Verrieres le Buisson Cedex**	Hybritech, TEL: (6) 928 10 00
Intl	**Germany, Taufkirchen**	Asternetics GmbH, TEL: 089/61 21007
Intl	**Greece, Athens**	Semicon Co., TEL: 3253626
Intl	**Guatemala, Guatemala City**	Electronica Guatemalteca, TEL: 25-649
Intl	**Guatemala, Guatemala City**	Tele-Equipos, S.A., TEL: 29-805

RCA (Cont)

Intl **Haiti, Port-Au-Prince**
Societe Haitienne D'Automobiles, S.A., TEL: 2-2347

Intl **Honduras, San Pedro Sula**
Francisco J. Yones, TEL: 543001

Intl **Hong Kong, Kowloon**
Hong Kong Elctrn. Comps. Co.

Intl **Hong Kong, Leighton Centre**
Gibb Livingston & Co., Ltd.

Intl **Hungary, Budapest**
Hungagent, TEL: 01/669-385

Intl **Iceland, Reykjavik**
Georg Amundason, TEL: 81180

Intl **India, Bangalore**
Photophone (Comel), TEL: 560 003

Intl **Indonesia, Jakarta Barat**
NVPD Soedarpo Corp.

Intl **Israel, Tel Aviv**
Aviv Elctrns., TEL: 03-494 450

Intl **Italy, Busa di Vigonza**
IDAC Elettronica SpA, TEL: (049) 72.56.99

Intl **Italy, Cinisello Balsamo**
LASI Elettronica SpA, TEL: (02) 61.20.441-5

Intl **Italy, Milano**
Eledra 3S SpA, TEL: (02) 349751

Intl **Italy, Milano**
Silverstar Ltd., TEL: (02) 49.96

Intl **Japan, Tokyo**
Okura & Co. Ltd.

Intl **Kuwait**
Morad Yousuf Behbehani

Intl **Mexico**
Dicopel, S.A.

Intl **Mexico, Mexico**
Mexicana de Bulbos, S.A., TEL: 564-92-33

Intl **Mexico, Mexico**
Raytel, S.A., TEL: (905) 546-0663

Intl **Mexico, Mexico City**
Elctrna. Remberg, S.A. de C.V., TEL: 510-47-49

Intl **Mexico, Mexico City**
Partes Electronicas, S.A., TEL: (905) 585-3640

Intl **Morocco, Casablanca**
Societe d'Equipement Mecanique et Electrique (S.E.M.E.), TEL: (212) 22.08.65

Intl **Nepal, Kathmandu**
Continental Commercial Distributors

Intl **Netherlands, Eindhoven 5600 HC**
Vekano BV, TEL: (40) 81 09 75

Intl **Netherlands, The Hague**
Konig en Hartman Elektrotechniek BV, TEL: 70-210101

Intl **New Zealand, Porirua**
A W A NZ Ltd.

Intl **Nicaragua, Managua**
Comercial F.A. Mendieta, S.A., TEL: 61406

Intl **Norway, Oslo**
Natl. Elektro A/S, TEL: (472) 64 49 70

Intl **Panama, Panama City**
Tropelco, S.A., TEL: 23-1285

Intl **Paraguay, Asuncion**
Compania Commercial Del Paraguay, S.A., TEL: 91-460

Intl **Peru, Lima**
Arven S.A., TEL: 716229

Intl **Philippines, Metro Manila**
Philippine Elctrn. Inds., Inc.

Intl **Philippines, Metro Manila**
Semitronics

Intl **Portugal, Lisbon**
Cristalonica, TEL: (019) 53 46 31

Intl **Singapore, Singapore**
Device Electronics Pte. Ltd.

Intl **Singapore, Singapore**
Microtronics Asso. Pte. Ltd.

Intl **South Africa, Dunswart**
Allied Elctrn. Comps. (PTY) Ltd., TEL: (011) 528-661

Intl **South Korea, Seoul**
Shin-A Trading Company

Intl **Spain, Madrid**
Diodes Espana S.A., TEL: 1/455 36 86

Intl **Spain, Madrid**
Kontron S.A., TEL: 1/729.11.55

Intl **Sri Lanka, Colombo**
C.W. Mackie & Co. Ltd.

Intl **Surinam, Paramaribo**
Kirpalani's Ltd., TEL: 71-400

Intl **Surinam, Paramaribo**
Surinam Elctrns., TEL: 76-555

Intl **Sweden, Stockholm**
Ferner Elctrns. AB, TEL: 08/80 25 40

Intl **Switzerland, Zurich**
Baerlocher AG, TEL: (01) 42.99.00

Intl **Taiwan, Taipei**
Delta Engrg. Ltd.

Intl **Taiwan, Taipei**
Multitech International Corp.

Intl **Thailand, Bangkok**
Anglo Thai Engrg. Ltd.

Intl **Thailand, Bangkok**
Better Pro Co. Ltd.

Intl **Trinidad, Port-of-Spain**
Kirpalani's Ltd., TEL: 638-2224/9

Intl **Turkey, Ankara**
Teknim Co. Ltd., TEL: 27.58.00

Intl **United Kingdom, Berkshire**
Power Technology Ltd., TEL: 0734-866766

Intl **United Kingdom, Berkshire**
Power Technology Ltd., TEL: (0734) 866766

Intl **United Kingdom, Essex**
STC Electronic Services, TEL: Harlow (0279) 26777

Intl **United Kingdom, Essex**
STC Electronics Services, TEL: Harlow (0279) 26777

Intl **United Kingdom, Essex**
VSI Electronics Ltd., TEL: Harlow (0279) 29666

Intl **United Kingdom, Harlow, Essex**
VSI Elctrns. (U.K.) Ltd., TEL: Harlow (0279) 29666

Intl **United Kingdom, Hitchin, Hertfordshire**
ACCESS Elctrn. Components Ltd., TEL: Hitchin (04626) 2333

Intl **United Kingdom, Sevenoaks, Kent**
Jermyn Distribution, TEL: Sevenoaks (0732) 450144

Intl **United Kingdom, Slough, Berks**
Gothic Crellon Electrns. Ltd., TEL: Burnham (06286)4434

Intl **United Kingdom, Slough, Berkshire**
Macro Mktg. Ltd., TEL: Burnham (06286) 4422

Intl **Uruguay, Montevideo**
American Products S.A. (APSA), TEL: 902735

Intl **Venezuela, Caracas**
Benavides, P., S.R.L., TEL: 571-21-46

Intl **West Germany, Dreieich bei Frankfurt**
Spoerle Elctrn. KG, TEL: 06103/3041

Intl **West Germany, Moglingen**
Elkose GmbH, TEL: 07141/487-1

Intl **West Germany, Putzbrunn bei Munchen**
Sasco GmbH, TEL: 089/46111

Intl **West Germany, Quickborn**
Alfred Neye Enatechnik GmbH, TEL: 04106/6120

Intl **West Germany, Quickborn**
ECS Hilmar Frehsdorf GmbH, TEL: 04106/71058-59

Intl **West Indies, Barbados**
Da Costa and Musson Ltds., TEL: 608-50

Intl **West Indies, Barbados**
Da Costa and Musson Ltds., TEL: 608-50

Intl **Yugoslavia, Ljubljana**
Avtotehna, TEL: (061) 552-341

Intl **Zambia, Lusaka**
African Technical Associates Ltd.

Intl **Zimbabwe, Harare**
B A K Electrical Holdings (Pvt) Ltd.

RCI/Data

RCI/Data
P.O. Box 4570
Toms River, New Jersey 08754-4570
201-341-5592

RELMS

Relational Memory Systems (RELMS)
1650-B Berryessa Road
San Jose, California 95131
408-729-3011
TWX: 910-379-0014

Distributors

Intl **Australia, Adelaide**
Protronics Pty. Ltd., TEL: (08) 212 3111

Intl **Hong Kong, Wan Chai**
Schmidt & Co., TEL: 5833-0222

Intl **India, Bombay**
Micronic Devices, TEL: 468170

Intl **India, Madras**
Saras Elctrns., TEL: 044-32497

Intl **Japan, Tokyo**
Nihon Teksel Co., Ltd., TEL: (03) 461-5121

Intl **New Zealand, Auckland**
McLean, TEL: 501-801

Intl **Spain, Barcelona**
Interface S.A., TEL: (3) 301 7851

Intl **Tawian, Taipei**
Mitac, TEL: 02 713-6980

Riehl Time

Riehl Time Corporation
53 South Jefferson Road
Whippany, New Jersey 07981
201-887-4141

RIFA

RIFA AB
Box 2
Spanga-Stockholm, Sweden S-16300

R. J. Brachman Associates

R. J. Brachman Associates Inc.
P. O. Box 1077
Havertown, Pennsylvania 19083
215-622-5495
800-228-7264

Rockwell International

Rockwell International
Semiconductor Products Division
4311 Jamboree Rd., P.O. Box C
Newport Beach, California 92658-8902
714-833-4700
TWX: 910-591-1654

Sales Office & Representatives

Intl **Argentina**
Control Digital S.R.L., TEL: 33 3460

Intl **Brazil, Orem Ut**
Round Valley Services, TEL: 801-224-5773

Rockwell International (Cont)

Intl	**Hong Kong, Hong Kong** Sun-Hung-Kai, Ltd., TEL: 5 822-5522
Intl	**Hong Kong, Kowloon** S.S.I. Components Ltd., TEL: 3-672112-3
Intl	**Israel, Givatayim** EIM Intl Electronics Ltd., TEL: (03) 774041-2-3-4
Intl	**Israel, Tel Aviv** Bitcom, TEL: (03) 494511
Intl	**Japan, Osaka** KBK, TEL: (06) 344-1121
Intl	**Japan, Osaka** Matsushita Electric Trading Co., TEL: (06) 204-5563
Intl	**Japan, Tokyo** KS Semiconductor, Inc., TEL: (03) 490 0761-2
Intl	**Japan, Tokyo** Kanematsu Semiconductor Corp., TEL: (03) 551-7791, (03) 552-6091
Intl	**Japan, Tokyo** Kyokuto Boeki Kaisha, Ltd., TEL: (03) 244-3803
Intl	**Japan, Tokyo** Marubeni-Hytech Co. Ltd., TEL: (03) 989-7810
Intl	**Japan, Tokyo** Matsushita Electric Trading Co., TEL: (03) 435-4552
Intl	**Korea, Seoul** Unistandard Corp., TEL: 265-3263
Intl	**New Zealand, Auckland** Microprocessor Developments Ltd., TEL: (9) 540-128
Intl	**Peoples Republic China, Beijing** Sun-Hung-Kai Ltd., TEL: 557-868
Intl	**Singapore, Kolam Ayer** Dynamar International Ltd., TEL: 74 76 188
Intl	**Taiwan, Taipei** Multitech Intl. Corp., TEL: 02 7681232
Intl	**Thailand, Bangkok** Siam Teltech Co. Ltd., TEL: 390-244554

Distributors

Intl	**Australia, Brisbane** Energy Control, TEL: 07 288-2757
Intl	**Austria, Wien** W. Moor GmbH, TEL: 43 (222) 858646
Intl	**Denmark, Silkeborg** Micronor, TEL: 456816522
Intl	**Finland, Helsinki** Valtameri, TEL: (90) 74 20 11
Intl	**France** ERN, BVC, TEL: 3-9560011
Intl	**France, Holtzeim** System Contact, TEL: (88) 782089
Intl	**Greece, Thessaloniki** Macedonian Electronics, Inc., TEL: (30) 31-306800-801
Intl	**Italy, Milano** De Mico S.P.A., TEL: (02) 95.20.551-95.20.651
Intl	**Italy, Milano** Murata Erie Electronica SRL, TEL: (39) 2-6073-786
Intl	**Spain, Barcelona** Comelta, TEL: 300-7712
Intl	**Spain, Madrid** Comelta SA, TEL: 754-4530, 754-4621
Intl	**Sweden, Solna** Betoma A.B., TEL: 08-820-280
Intl	**Switzerland, Zurich** Aumann & Co. AG, TEL: (41-1) 443300
Intl	**The Netherlands, Benelux** MCA-Tronix Intl B.V., TEL: 015-1349 40
Intl	**United Kingdom, Berkshire, England** Measurement Systems, Ltd., TEL: 06-35-45420
Intl	**United Kingdom, Birmingham, England** Steatite Microelectronics, TEL: 021 454 6961
Intl	**United Kingdom, Essex, England** Pelco Electronics, Ltd., TEL: 0708-61911
Intl	**United Kingdom, Leeds, England** Datatext (mcLelland) Ltd., TEL: 05-32-45 5169
Intl	**United Kingdom, Middlesex, England** R.C.S. Microsystems, Ltd., TEL: 01-979-2204
Intl	**West Germany, Braunschweig** System Elektronik, TEL: (0531) 314097-99
Intl	**West Germany, Dusseldorf** Unitronic GmBH, TEL: (0211) 626364-67
Intl	**West Germany, Munich** Astronic GmBH, TEL: 089-309-031
Intl	**West Germany, Munich** Bitronic GmbH, TEL: 49-89-496 001

S-MOS Systems

S-MOS Systems, Inc.
50 West Brokaw Road, Building 7
San Jose, California 95110
408-993-1212

Sales Office & Representatives

AL	**Huntsville** The Novus Group, 205-881-2207
AZ	**Scottsdale** AMI Inc., 602-948-2778
CA	**Huntington Beach** Mission Ridge Marketing, 714-896-0784
CA	**Manhattan Beach** Mission Ridge Marketing, 213-545-3128
CA	**San Diego** Professional Sales, 619-578-8831
CA	**San Jose** JP Electronics, 408-997-3761
CO	**Aurora** Electrodyne, 303-695-8903
CT	**Bekin Falls** John E. Boeing Company, 203-723-2355
CT	**New Haven** John E. Boeing Company, 203-239-5369
FL	**Clearwater** Dyne-A-Mark, 813-223-7969
FL	**Ft. Lauderdale** Dyne-A-Mark, 305-771-6501, 305-944-5031
FL	**Maitland** Dyne-A-Mark, 305-629-5557
FL	**Palm Bay** Dyne-A-Mark, 305-727-0192
GA	**Lilburn** The Novus Group, 404-381-1015
IL	**Skokie** Industrial Reps. Inc., 312-967-8430
IN	**Greenwood** Valentine and Associates, 317-888-2260
IN	**South Bend** Valentine and Associates, 219-288-7070
KS	**Shawnee Mission** Microtronics, 913-262-1444
MD	**Annapolis** Vince Iorio Associates, 301-261-1716
MA	**Lexington** John E. Boeing Company, 617-862-2500
MN	**Eden Prairie** High Tech Sales, 612-944-7274
MO	**St. Charles** Microtronics, 314-946-8500
NY	**New Hyde Park** Tri-Tek Associates, 516-747-8851
NY	**Rochester** Tri-Tek Associates, 716-271-6764
NC	**Raleigh** The Novus Group, 919-872-3966
OH	**Akron** BJ Davis Sales Corp., 216-645-0517
OH	**Lima** BJ Davis Sales Corp., 419-222-5505
OH	**Twinsburg** Schuster Electric Company, 216-425-8134
OR	**Forest Grove** Venture Electronics, 503-357-5112
PA	**Huntingdon Valley** Marder Sales, 215-947-5650
TX	**Dallas** Electronic Solutions, 214-644-2323
UT	**Salt Lake City** Electrodyne, 801-486-3801
WA	**Bellevue** Venture Electronics, 206-454-4594
WI	**Milwaukee** Industrial Reps. Inc., 414-259-0965/0966
Can	**Vancouver, BC** International Access Electronics, 604-299-3556

Distributors

AL	**Huntsville** Electro-Wise, 205-830-4764
AZ	**Scottsdale** Hall Electronics, 602-946-9977
AZ	**Tempe** Time Electronics, 602-967-2000
CA	**Anaheim** Pacesetter, 714-779-5855
CA	**Anaheim** Time Electronics, 714-937-0911
CA	**Chatsworth** Diplomat Electronics, 818-700-8700
CA	**Chatsworth** Time Electronics, 818-998-7200
CA	**Costa Mesa** Diplomat Electronics, 714-549-8401
CA	**San Diego** Insight Electronics, 619-587-0471
CA	**San Diego** Time Electronics, 619-586-1331
CA	**Sunnyvale** Diplomat Electronics, 408-734-1900
CA	**Sunnyvale** Pacesetter, 408-734-5470
CA	**Sunnyvale** Time Electronics, 408-734-9888
CA	**Torrance** Time Electronics, 213-320-0880
CA	**Tustin** AVED, Inc., 714-730-5848
CO	**Engelwood** Time Electronics, 303-799-8852
CO	**Wheatridge** Diplomat Electronics, 303-422-9229
CT	**Cheshire** Time Electronics, 203-271-3200
CT	**Danbury** Diplomat Electronics, 203-797-9674
CT	**East Haven** J.V. Electronics, 203-469-2321
FL	**Clearwater** Diplomat Electronics, 813-443-4514
FL	**Fort Lauderdale** Diplomat Electronics, 305-974-8700
FL	**Fort Lauderdale** Hammond Electronics, 305-973-7103
FL	**Fort Lauderdale** Time Electronics, 305-974-4800
FL	**Orlando** Hammond Electronics, 305-849-6060
FL	**Orlando** Time Electronics, 305-841-6565
GA	**Atlanta** Prehler Electronics, 404-447-5540
GA	**Norcross** Diplomatic Electronics, 404-449-4133
GA	**Norcross** Hammond Electronics, 404-524-7502

S-MOS Systems (Cont)

GA	**Norcross** Time Electronics, 404-448-4448
IL	**Bensenville** Diplomat Electronics, 312-595-1000
IL	**Bensenville** Time Electronics, 312-350-0610
IL	**Chicago** Prehler Electronics, 312-384-6100
IL	**Elk Grove Village** GBL Goold Electronics, 312-593-3220
IL	**Elk Grove Village** Q.P.S. Electronics
IL	**Northbrook** Classic Components, 312-272-9650
IN	**Indianapolis** Classic Components, 317-872-4777
IN	**Indianapolis** PrehlerElectronics, 317-841-0018
MD	**Baltimore** Hammond Electronics, 301-583-2525
MD	**Columbia** Diplomat Electronic, 301-995-1226
MD	**Columbia** Time Electronics, 301-964-3090
MA	**Andover** R Square Electronics, 617-470-3777
MA	**Woburn** Diplomat Electronics, 617-935-6611
MA	**Woburn** Time Electronics, 617-935-8080
MI	**Detroit** Semiconductor Reliability Assoc., 313-965-8550
MI	**Farmington Hills** Prehler Electronics, 313-473-7200
MN	**Bloomington** Prehler Electronics, 612-854-6780
MN	**Bloomington** Time Electronics, 612-944-9121
MN	**Plymouth** Diplomat Electronics, 612-559-2500
MO	**St. Louis** Time Electronics, 314-391-6444
NJ	**Cherry Hill** Diplomat Electronics, 609-751-0518
NJ	**Totowa** Diplomat Electronics, 201-785-1830
NY	**East Syracuse** Time Electronics, 315-432-0355
NY	**Hauppauge** Time Electronics, 516-273-0100
NY	**Liverpool** Diplomat Electronics, 315-652-5000
NY	**Melville** Diplomat Electronics, 516-454-6400
NY	**Mt. Vernon** Janesway Electronics, 914-699-6710
NC	**Greensboro** Hammond Electronics, 919-275-6361
NC	**Raleigh** Prehler Electronics, 919-876-9111
OH	**Cincinnati** Schuster Electric Company, 513-489-1400
OH	**Dayton** Televox, 513-294-4499
OH	**Dublin** Time Electronics, 614-761-1100
OH	**Middleburg Heights** Prehler Electronics, 216-243-5510
OR	**Portland** Time Electronics, 503-684-3780
PA	**King of Prussia** Time Electronics, 215-337-0900
TX	**Austin** Diplomat Electronics, 512-452-5254
TX	**Carrollton** Time Electronics, 214-241-7441
TX	**Dallas** Diplomat Electronics, 214-980-1888
TX	**Houston** Diplomat Electronics, 713-975-8447
TX	**Richardson** Janesway Electronics, 214-437-5125
UT	**Salt Lake City** Diplomat Electronics, 801-486-4134
WA	**Redmond** Time Electronics, 206-882-1600

Sahni

Sahni Corporation
224 North Wolfe Rd.
Sunnyvale, California 94086
408-735-8900
TWX: 510-600-3255

Samsung Semiconductor

Samsung Semiconductor, Inc.
5150 Great America Parkway
Santa Clara, California 95054
408-980-1630
800-423-8624
TELEX: 339544

Sales Office & Representatives

AL	**Huntsville** ESI (Electronic Sales, Inc.), 205-533-1735
AZ	**Phoenix** ISDS, 602-971-6250
CA	**Cupertino** Costar, Inc., 408-446-9339
CA	**San Diego** Cerco, 619-450-1754
CA	**Santa Ana** Westar Rep, 714-662-3484;714-662-3485
CO	**Aurora** Electrodyne, Inc., 303-695-8903
CT	**Ridgefield** Phoenix Sales, 203-438-9644
FL	**Altamonte Springs** Lawrence Associates, Inc., 305-339-3855
FL	**Boca Raton** Lawrence Associates, Inc., 305-368-7373
FL	**Clearwater** Lawrence Associates, Inc., 813-584-8110
FL	**Melbourne** Lawrence Associates, Inc., 305-724-8294
GA	**Norcross** ESI, 404-448-6554
IL	**Hoffman Estates** Samsung, 312-310-9780
IL	**Skokie** IRI (Industrial Representatives, Inc.), 312-967-8430
MA	**Burlington** RAM Technology Enterprises, 617-273-4888
MA	**Burlington** Samsung, 617-273-4888
MN	**Minneapolis** IEI (Int'l Electronics Inc.), 612-571-0000
MO	**St. Louis** IRI, 314-227-7401
NM	**Albuquerque** Nelco Electronics, 505-292-3657
NY	**Albany** Reagan/Compar, 518-489-4777
NY	**Endwell** Reagan-Compar, 607-723-8743
NY	**Fairport** Reagan-Compar, 716-271-2230
NY	**New Hartford** Reagan-Compar, 315-732-3775
NY	**New Hartford** Tri-Tek, 516-747-8851
NC	**Cary** Electronic Sales, Inc., 919-467-8486
OH	**New Lebanon** J. N. Bailey & Assoc., 513-687-1325
OR	**Portland** Earl & Brown Co., Inc., 503-245-2283
PA	**Doylestown** Monteiro Associates, Inc., 215-345-5855
TX	**Austin** Impaq Sales, 512-280-1694
TX	**Irving** Impaq Sales, 214-257-3677
UT	**Salt Lake City** Electrodyne, Inc., 801-486-3801
WA	**Seattle** Earl & Brown Co., Inc., 206-284-1121
WI	**Milwaukee** IRI, 414-259-0965
Can	**Lachine, Quebec** Bytewide Marketing, 514-636-4121

Distributors

CA	**Buena Park** R.P.S. Electronics, 714-521-5230
CA	**Carlsbad** Ital, 619-438-5355
CA	**City of Industry** Ital, 818-968-8515
CA	**Irvine** Cypress Electronics, 714-761-3366
CA	**San Jose** Cypress Electronics, 408-945-8400
CA	**Torrance** All American, 213-320-0240
CA	**Torrance** Cypress Electronics, 213-533-6005
CO	**Arvada** Wintronics, 303-431-7161
CO	**Wheatridge** Cypress Electronics, 303-431-2622
CT	**Danbury** Pilgrim Electronics, 203-792-7274
FL	**Miami** All American, 305-621-8282
FL	**Riviera Beach** Semiconductors, 305-842-0874
GA	**Atlanta** Prehler Electronics, 404-447-5540;800-241-0940
IL	**Chicago** Prehler Electronics, 312-384-6100;800-621-4177
IL	**Elk Grove** GBL Goold, 312-593-3220
IN	**Castleton** Prehler Electronics, 317-841-0018
MD	**Rockville** All American, 301-251-1205
MA	**Canton** Impact Sales, 617-821-1500
MA	**Norwood** Gerber Electronics, 617-329-2400
MI	**Farmington Hills** Prehler Electronics, 313-473-7200;800-321-5982
MN	**Bloomington** Prehler Electronics, 612-854-6780
NJ	**Union** Cougar Electronics, 201-687-7722
NY	**Chicago** QPS, 312-640-7755
NY	**Mt. Vernon** Janesway Electric, 914-699-6710
NY	**Ronkonkoma** All American, 516-981-3935
NC	**Raleigh** Prehler Electronics, 919-876-9111
OH	**Cincinnati** Schuster Electronics, 512-489-1400

Samsung Semiconductor (Cont)

OH	**Dayton** Televox, 513-294-4499
OH	**Middleburg Heights** Prehler Electronics, 216-243-5510
OH	**Twinsberg** Schuster Electronics, 216-425-8134
OR	**Portland** Radar Electric, 503-237-8404
TX	**Dallas** Cypress Electronics, 214-869-1435
TX	**Richardson** Janesway Electric, 214-437-5125
UT	**Salt Lake City** Wintronics, 801-483-1883
WA	**Seattle** Radar Electric, 206-282-2511

Sanyo

Sanyo Semiconductor Corporation
7 Pearl Court
Allendale, New Jersey 07401
201-825-8080
TELEX: 135138 SANYOSEMI ALNJ

SBE

SBE, Inc.
2400 Bisso Lane
Concord, California 94520
415-680-7722

Sales Office & Representatives

AZ	**Tempe** Holder Haver, 602-242-4025
CA	**Marina Del Rey** SRD, 213-306-5257
CA	**Sunnyvale** Computer Modules, 408-737-7727
GA	**Stone Mountain** Mountain Elec. Prod., 404-467-0603
IL	**Chicago** Comp. & System Sales, 312-397-4440
IA	**Des Moines** Beams Co., 515-255-1148
MD	**Rockville** Spectro Assoc., 301-279-2010
MA	**Wayland** Daner-Hayes, 617-655-0888
OH	**Cincinnati** Applied Data Management, 513-579-8108
TX	**Austin** Delta Comps., Inc., 512-458-4288
TX	**Dallas** Delta Comps., Inc., 214-358-4288
TX	**Houston** Delta Comps., Inc., 713-664-6777

Scientific Calculations

Scientific Calculations
7635 Main Street
Fishers, New York 14453
716-385-6790

SDA Systems

SDA Systems
2461 Mission College Blvd.
Santa Clara, California 95054
408-727-7811

SEEQ Technology

SEEQ Technology, Incorporated
1849 Fortune Drive
San Jose, California 95131
408-262-5041
TELEX: 9103382313

Sales Office & Representatives

AL	**Huntsville** Elctrn. Sales, 205-533-1735
AZ	**Phoenix** Compass Marketing, Inc., 602-996-0635
AZ	**Tucson** Compass Marketing, Inc., 602-293-1220
CA	**Culver City** Bestronics, 213-870-9191
CA	**Fallbrook** Matronix, 619-728-7678
CA	**Irvine** Bestronics, 714-261-7233
CA	**Mtn. View** Taarcom Inc., 415-960-1550
CA	**Santa Ana** SeeQ Technology, 714-547-0150
CA	**Santa Clara** SeeQ Technology, 408-554-9111
CA	**Woodland Hills** Bestronics, 818-704-5616
CO	**Englewood** Component Sales, 303-779-8060
CT	**Meridan** New England Tech. Sales, 203-237-8827
FL	**Clearwater** Dyne-A-Mark, 813-441-4702
FL	**Ft. Lauderdale** Dyne-A-Mark Corp., 305-771-6501
FL	**Maitland** Dyne-A-Mark Corp., 305-831-2097
FL	**Palm Bay** Dyne-A-Mark Corp., 305-727-0192
GA	**Norcross** Elctrns. Sales Inc., 404-448-6554
IL	**Itasca** Seeq Technology, 312-773-3860
IL	**Rolling Meadows** KMA Sales, 312-398-5300
IN	**Greenwood** Valentine & Assoc., 317-888-2260
IN	**Southbend** Valentine & Assoc., 219-288-7070
KS	**Overland Park** Advanced Technical Sales, 913-642-6675
MA	**Burlington** New England Tech Sales, 617-272-0434
MA	**Burlington** Seeq Technology, 617-229-6350
MI	**Detroit** Rathsburg Assoc., 313-882-1717
MN	**St. Paul** Cahill, Schmitz & Cahill, Inc., 612-646-7217
MO	**St. Louis** Advanced Technical Sales, 314-878-2921
NM	**Albuquerque** Compass Marketing, 505-888-0800
NY	**Binghamton** Gen Tech, 607-648-8833
NY	**Commack** ERA Inc., 516-543-0510
NY	**Liverpool** Gen Tech, 315-451-3480
NY	**Pittsford** Gen Tech, 315-381-2820
NY	**Pleasant Valley** Gen Tech, 914-635-3233
NC	**Cary** ESI, 919-467-8486
OH	**Dayton** The Lyons Corp., 513-278-0714
OH	**Richfield** The Lyons Corp., 216-659-9224
OK	**Tulsa** Bonser-Philhower Sales, 918-744-9964
OR	**Portland** Northwest Marketing Assocs., 503-620-0441
PA	**Bridgeville** The Lyons Corporation, 513-278-0714
PA	**Horsham** Delta Technical Sales, 215-443-5503
PA	**Wayne** SEEQ Technology, Inc., 214-964-9080
TX	**Austin** Bonser-Philhower Sales, 512-346-9186
TX	**Dallas** SEEQ Technology, Inc., 214-960-9570
TX	**Houston** Bonser-Philhower Sales, 713-531-4144
TX	**Richardson** Bonser-Philhower Sales, 214-234-8438
UT	**Salt Lake City** Waugaman Assoc. Inc., 801-261-0802
WA	**Bellevue** Northwest Marketing Assocs., 206-455-5846
WI	**Milwaukee** KMA Sales, 414-259-1771
Can	**Rexdale, Ontario** Electro Sources Inc., 416-675-4490
Intl	**Australia, Austmmer, NSW** RAE Industrial Electronics Pty. Ltd., TEL: (02) 232 6933, (042) 67 3722
Intl	**Australia, Crows Nest, NSW** RAE Industrial Electronics Pty. Ltd., TEL: (02) 439 7599
Intl	**Austria, Vienna** Othmar Lackner Elektron Bauelemente & Gerate, TEL: (0/222) 7526180
Intl	**Belgium, Liege** MCA Tronix, TEL: (0/41) 362780 or 95
Intl	**England, Gants Hills/Essex** Pronto Electronic Systems Ltd., TEL: (0/1) 544 6222
Intl	**England, Swindon, Old Town** SEEQ International Ltd., TEL: 0793-694999
Intl	**Federal Rep. of Germany, Hamburg** Astek Elektronik Vertriebs GmbH, TEL: (0/4106) 71084 or 86
Intl	**Federal Rep. of Germany, Munchen** Metronik GmbH, TEL: (0/89) 611-4063
Intl	**Federal Rep. of Germany, Munich** Adicom Industrie-Vertretungen, TEL: (0/89) 22 72 86
Intl	**Finland, Espoo** Komdel Oy, TEL: (010) 358 0885 011
Intl	**France, Gentilly** Radio Television Francaise (RTF), TEL: (16/1) 664 11 01
Intl	**France, Poissy** Seeq Technology Inc., TEL: 3-0741146
Intl	**India, Bangalore** SRI RAM Assoc., TEL: 602 140
Intl	**Israel, Herzlia** Vectronics Ltd., TEL: (0/52) 556070 or 71
Intl	**Italy, Milano** Eledra, TEL: (0/2) 34 97 51
Intl	**Japan, Kawasaki-City** Japan Macnics Corporation (JMC), TEL: (0/44) 711 0022
Intl	**Japan, Osaka City** Japan Macnics Corporation (JMC), TEL: (0/6) 325-0880
Intl	**Kowloon, Hong Kong** Electrocon Products Ltd., TEL: 3-687214-6
Intl	**Netherlands, Haaften** Techmation, Electronics B.V., TEL: (0/4189) 2222
Intl	**New Zealand, Epsom, Auckland** VSI Electronics (N.Z.) Ltd., TEL: 600 760
Intl	**Norway, Fjellhamar** Heko-Tech, TEL: 010 47 270 5244

SEEQ Technology (Cont)

Intl **Singapore, Singapore/Malaysia**
Desner Electronics (Far East) PTE Ltd., TEL: 3373188

Intl **Spain, Barcelona**
Semiconductores, TEL: (9/3) 217 23 40

Intl **Sweden, Vallingby**
Svensk Teleindustri AB, TEL: 010 46 438 0320

Intl **Switzerland, Zug**
Anatec AG Electronische Bauteile, TEL: (0/42) 315 477

Intl **Taiwan, Taipei**
Bright Up Industries Co., Ltd., TEL: (0/2) 733 2194

Intl **Turkey, Ankara**
Turkelec Electronic Co., Ltd., TEL: 189483

Distributors

AL **Huntsville**
RM Electronics, 205-852-1550

AL **Huntsville**
Schweber Elctrns., Inc., 205-882-2200

AZ **Phoenix**
Schweber Electronics, 602-997-4874

AZ **Tempe**
Anthem Elect., 602-966-6600

AZ **Tempe**
Time Electronics, 602-967-2000

CA **Anaheim**
Time Electronics, 714-937-0911

CA **Canoga Park**
Schweber Elctrns., Inc., 213-999-4702

CA **Chatsworth**
Anthem Elect., 213-700-1000

CA **Chatsworth**
Time Electronics, 818-998-7200

CA **E. Irvine**
Anthem Elect., 714-766-4444

CA **Irvine**
Schweber Elctrns., Inc., 714-556-3880

CA **Roseville**
Bell Industries, 916-969-3100

CA **Sacramento**
Schweber Elctrns., Inc., 916-929-9732

CA **San Diego**
Anthem Elect., 619-279-5200

CA **San Diego**
Schweber Electronics, 619-450-0454

CA **San Diego**
Time Electronics, 619-586-1331

CA **San Jose**
Anthem Elect., 408-295-4200

CA **San Jose**
Schweber Elctrns., Inc., 408-946-7171

CA **Sunnyvale**
Bell Industries, 408-734-8570

CA **Sunnyvale**
Time Electronics, 408-734-9888

CA **Torrance**
Time Electronics, 213-320-0880

CO **Englewood**
Anthem Elect., 303-790-4500

CO **Englewood**
Time Electronics, 303-850-7701

CO **Wheatridge**
Bell Industries, 303-424-1985

CT **Cheshire**
Time Electronics, 203-271-3200

CT **Danbury**
Schweber Elctrns., Inc., 203-792-3500

CT **Meriden**
Lionex, 203-265-1244

FL **Altamonte Springs**
Schweber Elctrns., Inc., 305-331-7555

FL **Ft. Lauderdale**
Time Electronics, 305-974-4800

FL **Hollywood**
Schweber Elctrns., Inc., 305-927-0511

FL **Orlando**
Time Electronics, 305-841-6565

GA **Atlanta**
Electro-Air, 404-351-3545

GA **Norcross**
O.C./Southeast Inc., 404-449-9508

GA **Norcross**
Schweber Elctrns., Inc., 404-449-9170

GA **Norcross**
Time Electronics, 404-448-4448

IL **Elk Grove Village**
RM Electronics, 312-364-6622

IL **Elk Grove Village**
Schweber Elctrns., Inc., 312-364-3750

IL **Wood Dale**
Time Electronics, 312-350-0610

IN **Ft. Wayne**
Graham Electronics, 219-423-3422

IN **Indianapolis**
RM Electronics, 371-291-7110

IN **Lafayette**
Graham Electronics, 317-423-5564

IA **Cedar Rapids**
Schweber Elctrns., Inc., 319-373-1417

KS **Overland Park**
Schweber Elctrns., Inc., 913-492-2921

MD **Columbia**
Lionex, 301-964-0040

MD **Columbia**
Time Electronics, 301-964-3090

MD **Gaithersburg**
Schweber Elctrns., Inc., 301-840-5900

MA **Bedford**
Schweber Elctrns., Inc., 617-275-5100

MA **Peabody**
Time Electronics, 617-935-8080

MA **Wilmington**
Lionex, 617-657-5170

MI **Grand Rapids**
RM Electronics, 616-531-9300

MI **Livonia**
Schweber Elctrns., Inc., 313-525-8100

MN **Bloomington**
Time Electronics, 612-944-9192

MN **Edina**
Schweber Elctrns., Inc., 612-941-5280

MO **Earth City**
Schweber Elctrns., Inc., 314-739-0526

MO **St. Louis**
Time Electronics, 314-391-6444

NH **Manchester**
Schweber Elctrns., Inc., 603-625-2250

NJ **Fairfield**
Lionex, 201-227-7960

NJ **Fairfield**
Schweber Elctrns., Inc., 201-227-7800

NM **Albuquerque**
Bell Industries, 505-292-2700

NY **E. Syracuse**
Time Electronics, 315-432-0355

NY **Hauppauge**
Lionex, 516-273-1660

NY **Hauppauge**
Lionex, 516-273-1660

NY **Hauppauge**
Time Electronics, 516-273-0100

NY **Rochester**
Schweber Elctrns., Inc., 716-424-2222

NY **Westbury**
Schweber Elctrns., Inc., 516-334-7474

NC **Raleigh**
Schweber Elctrns., Inc., 919-876-0000

OH **Beachwood**
Schweber Elctrns., Inc., 216-464-2970

OH **Cincinnati**
Graham Electronics, 513-772-1661

OH **Columbus**
Graham Electronics, 614-895-1590

OH **Dayton**
Bell Industries, 513-434-8231

OH **Dayton**
Schweber Elctrns., Inc., 513-439-1800

OH **Dublin**
Time Electronics, 614-761-1100

OK **Tulsa**
Quality Components, 918-664-8812

OK **Tulsa**
Schweber Elctrns., Inc., 918-622-8000

OR **Lake Oswego**
Anthem Elctrns., 503-684-2661

OR **Lake Oswego**
Bell Industries, 503-241-4115

OR **Portland**
Time Electronics, 503-685-3780

PA **Horsham**
Lionex, 215-443-5150

PA **Horsham**
Schweber Elctrns., Inc., 215-441-0600

PA **King of Prussia**
Time Electronics, 215-337-0900

PA **Pittsburgh**
Schweber Elctrns., Inc., 412-782-1600

TX **Addison**
Quality Components, 214-733-4300

TX **Austin**
Quality Components, 512-835-0220

TX **Austin**
Schweber Elctrns., Inc., 512-458-8253

TX **Austin**
Time Electronics, 214-241-7441

TX **Dallas**
RM Electronics, 214-869-2080

TX **Dallas**
Schweber Elctrns., Inc., 214-661-5010

TX **Houston**
Schweber Elctrns., Inc., 713-784-3600

TX **Sugarland**
Quality Components, 713-491-2255

UT **Salt Lake City**
Anthem Electronics, 801-973-8555

UT **Salt Lake City**
Bell Industries, 801-972-6969

WA **Bellevue**
Bell Industries, 206-747-1515

WA **Bellevue**
Time Electronics, 206-641-3640

WA **Redmond**
Anthem Electronics, 206-881-0850

WA **Redmond**
Time Electronics, 206-882-4600

WI **Brookfield**
Schweber Elctrns., Inc., 414-784-9020

WI **New Berlin**
RM Electronics, 414-784-4420

WI **Waukesha**
Bell Industries, 414-547-8879

Can **Calgary, Alberta**
Future Elctrns., 403-259-6408

Can **Downsview, Toronto**
Future Elctrns., 416-638-4771

Can **Edmonton, Alberta**
Future Elctrns., 403-486-0974

Can **Ottawa, Ontario**
Future Elctrns., 613-829-8313

Can **Pointe Claire, Quebec**
Future Elctrns., 514-694-7710

Can **Vancouver, British Columbia**
Future Elctrns., 604-438-5545

Intl **Australia, Sydney, NSW**
RAE Industrial Elctrns. Pty. Ltd., TEL: (02) 232 6933, (042) 67 3722

Intl **Australia, Victoria, NSW**
RAE Industrial Electronics Pty. Ltd., TEL: (03) 277 4033

Intl **Denmark, Copenhagen**
Exatec, TEL: (010) 45-156-5001

Intl **Federal Republic of Germany, Stuttgart**
Dacom Elecktronic, TEL: 0711/741021-22

Intl **France, Paris**
Reptronic, TEL: (6) 928-8700

Intl **Italy, Milano**
Cefra Spa, TEL: (0/2) 235264

SEEQ Technology (Cont)

Intl **Italy, Rome**
Cefra Spa, TEL: (0/6) 8456253
Intl **Japan, Tokyo**
Rikei, TEL: 345-1411
Intl **Korea, Seoul**
Hanaro, TEL: (02) 783-7141
Intl **South Africa, Sandton**
Advanced Semiconductor, TEL: (011) 802-5820
Intl **Turkey, Istanbul**
Turkelec Electronic Co., Ltd., TEL: (1) 143 40 46
Intl **United Kingdom, Newbury/Berkshire**
Microbusiness Ltd., TEL: 0635/42808
Intl **United Kingdom, Wokingham/Berkshire**
Kudos Electronics, TEL: 0734-794515

Semi Processes

Semi Processes Inc.
1971 N. Capital Avenue
San Jose, California 95132
408-945-1500
TWX: 910-338-0025

Sales Office & Representatives

Intl **Australia, Adelaide**
Protronics Pty. Ltd., TEL: (08) 212-31111
Intl **Austria, Vienna**
Othmar Lackner, TEL: 0222 531185
Intl **Belgium, Brussels**
Auriema N.V., TEL: (02) 52362 95
Intl **Denmark, Havdrup**
Henckel Elektronik, TEL: (02) 385791
Intl **England, Buckinghamshire**
Hunter Elctrn. Comp. Ltd., TEL: 6286 65421
Intl **England, Redhill, Surrey**
Tranchant Elctrns. Ltd., TEL: 0737 69217
Intl **Finland, Espoo**
OY Atomica A.B., TEL: 90-423533
Intl **France, Antony Cedex**
Almex SA, TEL: (1) 666 21 12
Intl **Hong Kong, Kowloon**
Electrocon Products Ltd., TEL: 3-687214-6
Intl **Israel, Ramat Gan**
M.R.B.D. Ltd., TEL: 03-736479, 732624
Intl **Italy, Milano**
Adrep SA, TEL: 02 404 4046/7/8
Intl **Japan, Tokyo**
Hirel Co., Ltd., TEL: 03-260-8401
Intl **Netherlands, Haaften**
Techmation Elctrns. B.V., TEL: 4189 2222
Intl **Norway, Oslo**
Eltron A/S, TEL: 02-46 28 70
Intl **Scotland, Lanarkshire**
Phoenix Elctrns. Ltd., TEL: (0555) 892393
Intl **Sweden, Vallingby**
teleimport ab, TEL: (08)89 02 65
Intl **Switzerland, Zurich**
ENA AG., TEL: 64 5757
Intl **West Germany, Berlin**
Aktive Elektronic GmbH, TEL: 030/684 5088
Intl **West Germany, Hamburg**
Microscan GmbH, TEL: 406 30 5067
Intl **West Germany, Martinsried (Munich)**
Atlantik Elektronik GmbH, TEL: (089) 857 2086
Intl **West Germany, Viersen (Dusseldorf)**
Mostron GmbH, TEL: 02162 17024

Distributors

Intl **Austria, Vienna**
Othmar Lackner, TEL: 0222 531185
Intl **Belgium, Brussels**
Auriema N.V., TEL: (02) 52362 95
Intl **England, Buckinghamshire**
Hunter Elctrn. Comp. Ltd., TEL: 6286 65421
Intl **France, Antony Cedex**
Almex SA, TEL: (1) 666 21 12
Intl **Israel, Ramat Gan**
M.R.B.D. Ltd., TEL: 03-736479, 732624
Intl **Italy, Milano**
Adrep SA, TEL: 02 404 4046/7/8
Intl **Japan, Tokyo**
Hirel Co., Ltd., TEL: 03-260-8401
Intl **Netherlands, Haaften**
Techmation Elctrns. B.V., TEL: 4189 2222
Intl **Scotland, Lanarkshire**
Phoenix Elctrns. Ltd., TEL: (0555) 892393
Intl **Sweden, Vallingby**
teleimport ab, TEL: (08) 89 02 65
Intl **Switzerland, Zurich**
ENA AG., TEL: 64 5757
Intl **West Germany, Hamburg**
Microscan GmbH, TEL: 406 30 5067
Intl **West Germany, Martinsried (Munich)**
Atlantik Elektronik GmbH, TEL: (089) 857 2086
Intl **West Germany, Viersen (Dusseldorf)**
Mostron GmbH, TEL: 02162 17024

SESCO

SESCO
20151 Nordhoff St.
Chatsworth, California 91311
818-709-7100
TELEX: 69-1404

Sales Office & Representatives

Intl **Austria, Wien**
Bacher, TEL: (0222) 83 56 460
Intl **Belgium, Niklaas**
Electronic Memories & Magnetics NV, TEL: 03-776975
Intl **England, Maidenhead, Berkshire**
EM Ltd., TEL: (0628) 72134
Intl **Hong Kong, Kowloon**
Tek-Devices, TEL: 780-435271
Intl **India, Madras**
Southern Elctrns., TEL: 412374/412943
Intl **Israel, Tel Aviv**
Eastronics, Ltd. (Computer Products), TEL: (3) 47 51 51
Intl **Spain, Barcelona 23**
Tecsidel AV, TEL: 34-3-237 29 80
Intl **Taiwan, Taipei, R.O.C.**
Mitac, TEL: (02) 5018231

Distributors

Intl **Australia, Prospect**
A. J. Distributors, TEL: (08) 269 1244
Intl **Netherlands, The Hague**
Koning & Hartman, TEL: 070-210101
Intl **South Africa, Pretoria**
Electronic Building Elements, TEL: 46-9221/6
Intl **Taiwan, Taichung**
Electronic Memories & Magnetics

SGS Semiconductor

SGS Semiconductor Corporation
1000 E. Bell Road
Phoenix, Arizona 85022
602-867-6100
TELEX: 249976

Specific product information:
Product Marketing .... Jack Dauber
Application engineering:
Applications .... Tom Hopkins
Literature:
Product Marketing .... Marian Sullivan
Place an order:
Local Sales Office
Follow-up an order:
Customer Service .... Local Sales Office

Sales Office & Representatives

Intl **Argentina, Buenos Aires**
Neutrec S.R.L., TEL: (011-54-1) 30-7774
Intl **Belgium, Bruxelles**
SGS-ATES Componenti Elettronici SpA, TEL: 02-948533
Intl **Colombia, Bagota**
Framex LTDA, TEL: (011-572) 212-9045
Intl **Denmark, Herlev**
SGS-ATES Scandinavia AB, TEL: 02-948533
Intl **France, Paris**
SGS-ATES France S.A., TEL: 33-657-11-83
Intl **Germany, Haidling**
SGS-ATES Deutschland Holbeiter Bauelemente GmbH, TEL: 08092-691
Intl **Italy, Agrate Brianza**
Export Sales Office, TEL: 039-6555287
Intl **Italy, Agrate Brianza**
Intl. Hdqtrs., TEL: 039-65551
Intl **Italy, Milano**
SGS-ATES Componenti Elettronici SpA, TEL: 02-4695651
Intl **Italy, Roma**
Sales Office, TEL: 06-8392848
Intl **Mexico,, Mexico D.F.**
Mexel S.A., TEL: (011-525) 563-5411
Intl **Singapore, Singapore**
SGS-ATES Singapore (Pte) Ltd., TEL: 2531411
Intl **Singapore, Tao Payoh**
SGS-ATES Singapore (Pte) Ltd., TEL: 65-2531411
Intl **Sweden, Marsta**
SGS-ATES Scandinavia AB, TEL: 0760-40120
Intl **United Kingdom, Aylesbury-Bucks**
SGS-ATES (United Kingdom) Ltd., TEL: 0296-5977
Intl **Uruguay, Montevideo**
Ricagni Imporactiones LTDA, TEL: (901) 594888
Intl **Venezuela, Caracas**
Magnetica, TEL: (011-582) 239-3931

Sharp Electronics

Sharp Electronics Corporation
10 Sharp Plaza
Paramus, New Jersey 07652
201-265-5600
TELEX: 134-327

Shiva Multisystems

Shiva Multisystems Corporation
1040 Marsh Rd.
Menlo Park, California 94025
415-321-2350

Specific product information:
Jeff Deutsch

Siemens

Siemens Corporation
186 Wood Avenue South
Iselin, New Jersey 08830
201-321-3400
TELEX: 84-4491

Sierra Semiconductor

Sierra Semiconductor Corporation
2075 N. Capitol Ave.
San Jose, California 95132
408-263-9300
TELEX: 384467
Specific product information:
Tom Reynolds

Signetics

Signetics Corporation
811 East Arques Ave., P.O. Box 3409
Sunnyvale, California 94088-3409
408-991-2000
TWX: 910-339-9283

Specific product information:

Linear Lst	408-746-1838
Bipolar LSI	408-746-1816
Bipolar Memory	408-746-3564
MOS Memory	408-746-1756
CMOS Gate Arrays	408-746-2194
Logic	408-746-1617
Microprocessor	408-746-2254
Microsystems	408-746-2137
Military	916-924-6047
Philips/Euro-Products	408-746-1338

Application engineering:

Analog	408-746-5724, 5725
Bipolar LSI	408-746-1816
Bipolar Memory	408-746-3564
MOS Memory	408-746-1756
CMOS Gate Arrays	408-746-2194
Logic	408-746-1617
Microprocessor	408-746-2254
Microsystems	408-746-2137
Military	916-924-6047
Philips/Euro-Products	408-746-1338

Literature:

Publication Services	408-746-2111

Sales Office & Representatives

AL	**Huntsville**	Signetics, 205-830-4001
AZ	**Phoenix**	Signetics Sales Office, 602-265-4444
AZ	**Scottsdale**	Thom Luke Sales, Inc., 602-941-1901
CA	**Canoga Park**	Signetics Sales Office, 818-340-1431
CA	**Irvine**	Signetics Sales Office, 714-833-8980, 213-588-3281
CA	**Los Angeles**	Signetics Sales Office, 213-670-1101
CA	**San Diego**	Mesa Engrg., 619-278-8021
CA	**San Diego**	Signetics Sales Office, 619-560-0242
CA	**Santa Clara**	Magna Sales, 408-727-8753
CA	**Sunnyvale**	Signetics Sales Office, 408-991-3737
CO	**Aurora**	Signetics Sales Office, 303-751-5011
CT	**Brookfield**	Kanan Assoc., 203-775-0494
CT	**Brookfield**	Signetics Sales Office, 203-775-6888
FL	**Clearwater**	Signetics Sales Office, 813-796-7086
FL	**Ft. Lauderdale**	Signetics Sales Office, 305-486-6300
FL	**Pompano Beach**	V/G Sales, 305-971-0900
GA	**Atlanta**	Signetics Sales Office, 404-953-0067
IL	**Itasca**	Signetics Sales Office, 312-250-0050
IL	**Schaumburg**	Micro-Tex, Inc., 312-885-1131
IN	**Kokomo**	Signetics Sales Office, 317-453-6462
IA	**Marion**	Rep. Associates Corp., 319-373-0152
KS	**Kansas City**	B.C. Elctrn. Sales, 913-342-1211
KS	**Overland Park**	Signetics Sales Office, 913-469-4005
KS	**Wichita**	B.C. Elctrn. Sales, 316-722-0104
MD	**Columbia**	Delta III, 301-730-4700
MD	**Glen Burnie**	Signetics Sales Office, 301-787-0220
MA	**Littleton**	Signetics Sales Office, 617-486-8411
MA	**Needham Heights**	Kanan Assocs., 617-449-7400
MI	**Bloomfield Hills**	Enco Mktg., 313-642-0203
MI	**Farmington Hills**	Signetics Sales Office, 313-476-1610
MN	**Eden Prairie**	High Technology Sales, 612-944-7274
MN	**Edina**	Signetics Sales Office, 612-835-7455
MO	**Bridgeton**	B.C. Electronic Sales, 314-291-1101
NJ	**East Hanover**	Emtec Sales, Inc., 201-428-0600
NJ	**Parsippany**	Signetics Sales Office, 201-334-4405
NM	**Albuquerque**	Power Enterprises, 505-298-1918
NY	**Hauppauge**	Signetics Sales Office, 516-348-7877
NY	**Ithaca**	Bob Dean, Inc., 607-257-1111
NY	**Liverpool**	Signetics Sales Office, 315-451-5470
NY	**Melville**	Emtec Sales, Inc., 516-752-1630
NC	**Cary**	Signetics Sales Office, 919-481-0400
OH	**Cincinnati**	Stegman Blaine Marketing, Inc., 513-729-1969
OH	**Cleveland**	Stegman Blaine Marketing, Inc., 216-331-4474
OH	**Vandalia**	Stegman Blaine Marketing, Inc., 513-832-2488
OH	**Worthington**	Signetics Sales Office, 614-888-7143
OK	**Tulsa**	Jerry Robinson and Associates, 918-665-3562
OR	**Hillsboro**	Western Tech. Sales, 503-640-4621
OR	**Hillsboro**	Western Technical Sales, 503-640-4621
OR	**Portland**	Signetics, 503-297-5592
PA	**Horsham**	Delta Technical Sales Inc., 215-443-5503
PA	**Horsham**	Signetics Sales Office, 215-443-5500
PA	**Pittsburgh**	Cover & Newman, 412-531-2002
TN	**Greeneville**	Signetics Sales Office, 615-639-0251
TX	**Austin**	Signetics Sales Office, 512-339-9944
TX	**Houston**	OM Sales, 713-789-4426
TX	**Richardson**	Signetics Sales Office, 214-644-3500
UT	**Salt Lake City**	Electrodyne, 801-486-3801
WA	**Bellevue**	Western Technical Sales, 206-641-3900
WA	**Spokane**	Western Tech. Sales, 509-922-7600
WI	**Waukesha**	Micro-Tex, Inc., 414-542-5352
Can	**Etobicoke, Ontario**	Signetics Canada, Ltd., 416-626-6676
Can	**Nepean, Ontario**	Signetics Canada, Ltd., 613-726-9576
Can	**Nepean, Ontario**	Tech-Trek, Ltd., 613-564-0049
Can	**Pointe Claire, Quebec**	Tech-Trek, Ltd., 514-697-3385
Can	**Rexdale, Ontario**	Tech-Trek, Ltd., 416-674-1717
Can	**Richmond, B.C.**	Tech-Trek, Ltd., 604-271-3149
Intl	**Argentina, Buenos Aires**	Philips Argentina S.A., TEL: 541-7141
Intl	**Austria, Wien**	Osterrichische Philips Bauelemente, TEL: 43-222-93-26-2
Intl	**Belgium, Bruxelles**	N.V. Philips & MBLE, TEL: 32-02-242-7400
Intl	**India, Bombay**	Philips Inida & Elect. Ltd., TEL: 91-22-295144
Intl	**Ireland, Dublin**	Philips Electrical Ltd., TEL: 353-1-69-3355
Intl	**Japan, Osaka**	Signetics Japan, TEL: 816-304-6171
Intl	**Malaysia, Kuala Lumpur**	Philips Malaysia Snd. Berhad, TEL: 77 44 11
Intl	**Turkey, Istanbul**	Turk Philips Ticaret A.S., TEL: 43 59 10

Distributors

AL	**Huntsville**	Hamilton/Avnet Elctrns., 205-837-7210
AL	**Huntsville**	Schweber Electronics, 205-882-2200
AZ	**Phoenix**	Schweber Electronics, 602-997-4874
AZ	**Phoenix**	Wyle LEMG, 602-249-2232
AZ	**Tempe**	Arrow Electronics, 602-968-4800
AZ	**Tempe**	Hamilton/Avnet Electronics, 602-231-5100
CA	**Calabasas**	Wyle LEMG, 818-880-9000
CA	**Canoga Park**	Schweber Electronics, 818-999-4702
CA	**Chatsworth**	Anthem Electronics, 818-700-1000
CA	**Chatsworth**	Arrow Electronics, 818-701-7500
CA	**Chatsworth**	Avnet Electronics, 818-700-2600
CA	**Chatsworth**	Hamilton/Avnet Electronics, 818-700-6500
CA	**Costa Mesa**	Avnet Elctrns., 714-754-6111
CA	**Costa Mesa**	Hamilton Electro Sales, 714-641-4100
CA	**Culver City**	Hamilton Avnet Elctrns. Military, 213-558-2121

Signetics (Cont)

CA	**Garden Grove**	Wyle LEMG Computer Products, 714-891-1717
CA	**Gardena**	Schweber Electronics, 213-327-8409
CA	**Hayward**	Arrow Electronics, 415-487-4600
CA	**Irvine**	Anthem Electronics, 714-768-4444
CA	**Irvine**	Schweber Elctrns., 714-863-0200
CA	**Irvine**	Wyle LEMG, 714-863-1611
CA	**Ontario**	Hamilton/Avnet Electronics, 714-989-4602
CA	**Rancho Cordova**	Wyle LEMG, 916-638-5282
CA	**Sacramento**	Hamilton/Avnet Electronics, 916-925-2216
CA	**Sacramento**	Schweber Electronics, 916-929-9732
CA	**San Diego**	Anthem Elctrns., 619-453-4871
CA	**San Diego**	Arrow Electronics, 619-565-4800
CA	**San Diego**	Hamilton/Avnet Elctrns., 619-571-7510
CA	**San Diego**	Schweber Electronics, 619-450-0454
CA	**San Diego**	Wyle LEMG, 619-565-9171
CA	**San Jose**	Anthem Elctrns. Inc., 408-946-8000
CA	**San Jose**	Schweber Electronics, 408-946-7171
CA	**Santa Clara**	Wyle LEMG, 408-727-2500
CA	**Sunnyvale**	Arrow Elctrns., 408-745-6600
CA	**Sunnyvale**	Hamilton/Avnet Elctrns., 408-743-3355
CA	**Tustin**	Arrow Electronics, 714-838-5422
CA	**Woodland Hills**	Avnet Electronics, 818-700-2600
CO	**Aurora**	Arrow Electronics, 303-696-1111
CO	**Englewood**	Anthem Electronics, 303-790-4500
CO	**Englewood**	Hamilton/Avnet Elctrns., 303-779-9998
CO	**Englewood**	Schweber Electronics, 303-799-0258
CO	**Thorton**	Wyle LEMG, 303-457-9953
CT	**Danbury**	Hamilton/Avnet Elctrns., 203-797-2800
CT	**Danbury**	Schweber Elctrns., 203-748-7080
CT	**Meriden**	Lionex Corp., 203-237-2282
CT	**Wallingford**	Arrow Elctrns., 203-265-7741
FL	**Altamonte Springs**	Schweber Electronics, 305-331-7555
FL	**Deerfield Beach**	Arrow Electronics, 305-429-8200
FL	**Ft. Lauderdale**	Hamilton/Avnet Elctrns., 305-971-2900
FL	**Hollywood**	Schweber Elctrns., 305-927-0511
FL	**Palm Bay**	Arrow Elctrns., 305-725-1480
FL	**St. Petersburg**	Hamilton/Avnet Elctrns., 813-576-3930
FL	**Winter Park**	Hamilton/Avnet Electronics, 305-628-3888
GA	**Atlanta**	Schweber Elctrns., 404-449-9170
GA	**Norcross**	Arrow Elctrns., 404-449-8252
GA	**Norcross**	Hamilton/Avnet Elctrns., 404-447-7507
IL	**Bensenville**	Hamilton/Avnet Elctrns., 312-860-7700
IL	**Elk Grove Village**	Schweber Elctrns., 312-364-3750
IL	**Schaumburg**	Arrow Elctrns., 312-397-3440
IN	**Carmel**	Hamilton/Avnet Electronics, 317-844-9333
IN	**Indianapolis**	Arrow Elctrns., 317-243-9353
IA	**Cedar Rapids**	Hamilton/Avnet Electronics, 319-362-4757
IA	**Cedar Rapids**	Schweber Electronics, 319-373-1417
KS	**Overland Park**	Hamilton/Avnet Elctrns., 913-888-8900
KS	**Overland Park**	Schweber Electronics, 913-492-2921
MD	**Colulmbia**	Lionex Corp., 301-964-0040
MD	**Columbia**	Arrow Electronics, 301-995-0003
MD	**Columbia**	Hamilton/Avnet Elctrns., 301-995-3500
MD	**Gaithersburg**	Schweber Elctrns., 301-840-5900
MA	**Wilmington**	Lionex Corp., 617-657-5170
MA	**Wilmington**	Schweber Elctrns., 617-275-5100
MA	**Woburn**	Arrow Elctrns., 617-933-8130
MA	**Woburn**	Hamilton/Avnet Elctrns., 617-273-7500
MI	**Ann Arbor**	Arrow Elctrns., 313-971-8220
MI	**Grand Rapids**	Hamilton Avnet Elctrns., 616-243-8805
MI	**Livonia**	Hamilton/Avnet Elctrns., 313-522-4700
MI	**Livonia**	Schweber Elctrns., 313-525-8100
MI	**Livonia**	Schweber Electronics, 315-525-8100
MN	**Edina**	Arrow Elctrns., 612-830-1800
MN	**Edina**	Schweber Elctrns., 612-941-5280
MN	**Minnetonka**	Hamilton/Avnet Electronics, 612-932-0600
MO	**Earth City**	Hamilton/Avnet Elctrns., 314-344-1200
MO	**St. Louis**	Arrow Elctrns., 314-567-6888
NH	**Manchester**	Arrow Elctrns., 603-668-6968
NH	**Manchester**	Hamilton/Avnet Electronics, 603-624-9400
NH	**Manchester**	Schweber Electronics, 603-625-2250
NJ	**Cherry Hill**	Hamilton/Avnet Elctrns., 609-424-0100
NJ	**Fairfield**	Arrow Elctrns., 201-575-5300
NJ	**Fairfield**	Hamilton/Avnet Elctrns., 201-575-3390
NJ	**Fairfield**	Lionex Corporation, 201-227-7960
NJ	**Fairfield**	Schweber Elctrns., 201-227-7880
NJ	**Marlton**	Arrow Electronics, 609-596-8000
NM	**Albuquerque**	Arrow Electronics, 505-243-4566
NM	**Albuquerque**	Hamilton/Avnet Elctrns., 505-765-1500
NY	**Melville**	Hamilton/Avnet Electronics, 516-231-9800
NY	**Buffalo**	Summit Distrs., 716-887-2800
NY	**East Syracuse**	Hamilton/Avnet Elctrns., 315-437-2641
NY	**Hauppauge**	Arrow Elctrns., 516-231-1000
NY	**Hauppauge**	Lionex Corporation, 516-273-1660
NY	**Liverpool**	Arrow Elctrns., 315-652-1000
NY	**Rochester**	Arrow Elctrns., 716-275-0300
NY	**Rochester**	Hamilton/Avnet Elctrns., 716-475-9130
NY	**Rochester**	Schweber Elctrns., 716-424-2222
NY	**Westbury**	Schweber Elctrns., 516-334-7474
NC	**Raleigh**	Arrow Electronics, 919-876-3132
NC	**Raleigh**	Hamilton/Avnet Elctrns., 919-878-0810
NC	**Raleigh**	Schweber Electronics, 919-876-0000
OH	**Beechwood**	Schweber Elctrns., 216-464-2970
OH	**Centerville**	Arrow Elctrns., 513-435-5563
OH	**Cleveland**	Hamilton/Avnet Elctrns., 216-831-3500
OH	**Dayton**	Hamilton/Avnet Elctrns., 513-439-6700
OH	**Dayton**	Schweber Electronics, 513-439-1800
OH	**Solon**	Arrow Elctrns., 216-248-3990
OH	**Westerville**	Hamilton/Avnet Electronics, 614-882-7004
OK	**Tulsa**	Quality Comps., 918-664-8812
OK	**Tulsa**	Schweber Electronics, 918-622-8000
OR	**Hillsboro**	Wyle LEMG, 503-640-6000
OR	**Lake Oswego**	Anthem Electronics, 503-684-2661
OR	**Lake Oswego**	Hamilton/Avnet Elctrns., 503-635-8831
OR	**Tigard**	Arrow Electronics, 503-684-1690
PA	**Horsham**	Lionex Corp., 215-443-5150
PA	**Horsham**	Schweber Elctrns., 215-441-0600
PA	**Monroeville**	Arrow Elctrns., 412-856-7000
PA	**Pittsburgh**	Hamilton/Avnet Electronics, 412-281-4150
PA	**Pittsburgh**	Schweber Electronics, 412-782-1600
TX	**Addison**	Quality Components, 214-733-4300
TX	**Austin**	Arrow Electronics, 512-835-4180
TX	**Austin**	Hamilton/Avnet Elctrns., 512-837-8911
TX	**Austin**	Quality Comps., 512-835-0220
TX	**Austin**	Schweber Electronics, 512-458-8253
TX	**Austin**	Wyle LEMG, 512-834-9957
TX	**Carrolton**	Arrow Electronics, 214-380-6464
TX	**Dallas**	Schweber Elctrns., 214-661-5010
TX	**Houston**	Arrow Electronics, 713-530-4700
TX	**Houston**	Hamilton/Avnet Elctrns., 713-780-1771
TX	**Houston**	Schweber Elctrns., 713-784-3600

Signetics (Cont)

TX	**Houston**	Wyle LEMG, 713-879-9953
TX	**Irving**	Hamilton/Avnet Electronics, 214-659-4111
TX	**Richardson**	Wyle LEMG, 214-235-9953
TX	**Sugar Land**	Quality Components, 713-240-2255
UT	**Anthem Electronics**	Salt Lake City, 801-973-8555
UT	**Salt Lake City**	Arrow Electronics, 801-972-0404
UT	**Salt Lake City**	Hamilton/Avnet Elctrns., 801-972-2800
UT	**Salt Lake City**	Wyle LEMG, 801-974-9953
WA	**Bellevue**	Arrow Elctrns., 206-643-4800
WA	**Bellevue**	Hamilton/Avnet Elctrns., 206-453-5844
WA	**Bellevue**	Wyle LEMG, 206-453-8300
WA	**Bellevue**	Wyle LEMG, 206-453-8300
WA	**Redmond**	Anthem Electronics, 206-881-0850
WI	**Brookfield**	Schweber Electronics, 414-784-9020
WI	**New Berlin**	Hamilton/Avnet Elctrns., 414-784-4510
WI	**Oak Creek**	Arrow Elctrns., 414-764-6600
Can	**Brampton, Ontario**	Zentronics, Ltd., 416-451-9600
Can	**Burnaby, Vancouver**	Hamilton/Avnet Electronics, 604-272-4242
Can	**Calgary, Alberta**	Hamilton Avnet Elctrns., 403-230-3586
Can	**Calgary, Alberta**	Zentronics, 403-272-1021
Can	**Downsview, Ontario**	Arrow/Cesco, 416-661-0220
Can	**Mississauga, Ontario**	Hamilton/Avnet Elctrns., 416-677-7432
Can	**Montreal, Quebec**	Arrow/Cesco, 514-735-5511
Can	**Montreal, Quebec**	Zentronics Ltd., 514-735-5361
Can	**Nepean, Ontario**	Arrow/Cesco, 613-226-6903
Can	**Nepean, Ontario**	Hamilton/Avnet Elctrns., 613-226-1700
Can	**Nepean, Ontario**	Zentronics Ltd., 613-226-8840
Can	**Quebec, Quebec**	Arrow/Cesco, 418-687-4231
Can	**Richmond, B.C.**	Zentronics, Ltd., 604-273-5575
Can	**Ville St. Laurent, Quebec**	Hamilton/Avnet Elctrns., 514-335-1000
Can	**Ville St. Laurent, Quebec**	Zentronics, Ltd., 514-735-5361
Can	**Waterloo, Ontario**	Zentronics, 519-884-5700
Can	**Winnipeg**	Zentronics, 204-775-8661
Intl	**Australia, Lane-Cove**	Philips Inds. Holdings Ltd., TEL: 61-2-427-0888
Intl	**Austria, Wien**	Osterreichische Philips Bauelemente, TEL: 43-222-93-26-2
Intl	**Brazil, Sao Paulo**	Ibrape, TEL: (55) 011 211-2600
Intl	**Chile, Santiago**	Philips Chilena S.A., TEL: 56-2-39-4001
Intl	**Columbia, Bogota**	Sadape S.A., TEL: 600-600
Intl	**Denmark, Kobenhavn**	Miniwatt A/S, TEL: 45-01-69-1622
Intl	**Finland, Helsinki**	Oy Philips Ab, TEL: 358-1-7271
Intl	**France, Paris**	R.T.C. La Radiotechnique-Compelec, TEL: 33-1-338-8000
Intl	**Germany, Hamburg**	Valvo, TEL: 49-40-3296-19
Intl	**Greece, Athens**	Philips S.A. Hellenique, TEL: 9215111
Intl	**Hong Kong, Kwai Chung**	Philips Hong Kong Ltd., TEL: 852-0-245121
Intl	**Indonesia, Jakarta**	P.T. Philips-Ralin Elctrns., TEL: 716 131
Intl	**Israel, Tel Aviv**	Rapac Elctrns., Ltd., TEL: 972-3-477115
Intl	**Italy, Milano**	Philips S.p.A., TEL: 39-2-6994
Intl	**Japan, Tokyo**	Signetics Japan, Ltd., TEL: 813-230-1521
Intl	**Korea, Seoul**	Philips Elect Korea Ltd., TEL: 794-4202
Intl	**Mexico, Mexico**	Elctrna. S.A. de C.V., TEL: 52-721-61300
Intl	**Netherlands, Eindhoven**	Philips Nederland B.V., TEL: 31-40-79-3333
Intl	**New Zealand, Auckland**	Philips Electrical Ind., TEL: 64-9-605914
Intl	**Norway, Oslo**	Norsk A/S Philips, TEL: 47-2-680200
Intl	**Peru, Lima**	Cadesa, TEL: 326070
Intl	**Philippines, Makati-Rizal**	Philips Indl. Dev., Inc., TEL: 868951
Intl	**Portugal, Lisbon**	Philips Portuguesa SARL, TEL: 351-19-68-3121
Intl	**Singapore, Singapore**	Philips Project Dev. Pte., Ltd., TEL: 65-253-8811
Intl	**South Africa, Johannesburg**	E.D.A.C. (Pty), Ltd., TEL: 27-11-614-2362
Intl	**Spain, Barcelona**	Miniwatt S.A., TEL: 301 63 12
Intl	**Sweden, Stockholm**	A.B. Elcoma, TEL: 46-08-67-9780
Intl	**Switzerland, Zurich**	Philips A.G., TEL: 41-01-988-2211
Intl	**Taiwan, Taipei**	Philips Taiwan, Ltd., TEL: 886-2-563-1717
Intl	**Thailand, Bangkok**	Philips Electrical Co., Ltd., TEL: 233-6330-9
Intl	**United Kingdom, London**	Mullard, Ltd., TEL: 44-01-580-6633
Intl	**Uruguay, Montevideo**	Luzilectron S.A., TEL: 91-43-21
Intl	**Venzuela, Caracas**	Industrias Venezolanas Philips S.A., TEL: 58-2-36-0511

Silicon Compilers

Silicon Compilers
2045 Hamilton Ave.
San Jose, California 95125
408-371-2900

Silicon Design Labs

Silicon Design Labs
645 Martinsville Rd.
P.O. Box 16
Liberty Corner, New Jersey 07938
201-580-0102

Silicon General

Silicon General, Inc.
11861 Western Avenue
Garden Grove, California 92641
714-898-8121
TELEX: 69-2411
TWX: 910-596-1804

Specific product information:
Sales Application Engineering

Application engineering:
Sales Application Engineering

Literature:
Inside Sales

Price and delivery:
Rose Mulligan, Western Area
Ollie Labonte, Eastern Area

Follow-up an order:
Rose Mulligan, Western Area
Ollie Labonte, Eastern Area

Sales Office & Representatives

Intl	**Argentina, Buenos Aires**	YEL srl., TEL: 46-2211
Intl	**Australia, Prospect**	A.J. Distrs., TEL: 2691244
Intl	**Austria, Wien**	Othmar Lackner Elect., TEL: 531185
Intl	**Belgium, Hasselt**	Heynen b.v., TEL: 210006
Intl	**Denmark, Copenhagen**	E. V. Johanssen Electronik, TEL: (01) 839022
Intl	**England, London**	Power Technology, TEL: 734-866766
Intl	**France, Paris**	Radio Equip.-Antares, TEL: 758-11-11
Intl	**Germany, Munchen**	Astronic GmbH, TEL: 309031
Intl	**Germany, Munchen**	Neumuller GmbH, TEL: 61181
Intl	**Hong Kong, Kowloon**	Tektron Elect. Ltd., TEL: 856199
Intl	**India, Bombay**	Zenith Electronics, TEL: 384214
Intl	**Israel, Tel Aviv**	Talviton Elctrns. Ltd., TEL: 44-45-72
Intl	**Italy, Monza**	Exhibo Italiana S.P.A., TEL: 360021
Intl	**Japan, Tokyo**	Hakuto Co., Ltd., TEL: 03-502-2211
Intl	**Netherlands, Gennep**	Heynen b.v., TEL: 08851-1956
Intl	**Norway, Oslo**	Henaco, TEL: 645040
Intl	**South Africa, Pretoria**	Elctrn. Bldg. Elements, TEL: 469221
Intl	**Spain, Madrid**	Amitron S.A., TEL: 2485863
Intl	**Sweden, Vallingby**	Svensk Telaindustri AB, TEL: 380320
Intl	**Switzerland, Zurich**	Kontron Elctrns., TEL: 4354111

Siliconix

Siliconix Inc.
2201 Laurelwood Road
Santa Clara, California 95054
408-988-8000
TWX: 910-338-0227

Specific product information:
Publications .... ext. 2066

Siliconix (Cont)

Application engineering:

Analog	ext. 2022
Interface	ext. 2420
Digital	ext. 2022
Mospower FET's	ext. 2583
Micropower Linear	ext. 2628
Switches	ext. 2022

Literature:

Publications	ext. 2066

Price and delivery:
Sales Department

Place an order:
Local Sales Office

Follow-up an order:
Local Sales Office

All other information:

Publications	ext. 2066
Public Relations	ext. 2395

Sales Office & Representatives

AL **Huntsville**
Rep Inc., 205-881-9270
AZ **Tempe**
Quatra Assoc., 602-820-7050
CA **San Diego**
OHM SPJN, 619-695-8102
CA **Santa Clara**
Siliconix, 408-988-8000
CA **Tustin**
Siliconix, 714-544-8378, 714-544-7275
CT **Cheshire**
Scientific Components, 203-272-2963
CT **Ridgefield**
Siliconix, 203-431-3535
FL **Altamonte Springs**
Semtronics, 305-831-8233
FL **Altamonte Springs**
Siliconix, 305-831-3644
FL **Clearwater**
Semtronics, 813-461-4675
FL **Ft. Lauderdale**
Semtronics, 305-731-2484
GA **Tucker**
Rep Inc., 404-938-4358
IL **Des Plaines**
Electron Mktg. Corp., 312-298-2330
IL **Downers Grove**
Siliconix, 312-960-0106
IN **Indianapolis**
Wilson Technical Sales Inc., 317-298-3345
IA **Cedar Rapids**
Electromec Sales Inc., 319-362-6413
MD **Baltimore**
Pro Rep, 301-653-3600
MA **Waltham**
Siliconix, 617-890-7180
MI **Brighton**
A.P. Assocs., 313-229-6550
MN **Burnsville**
Electromec Sales Inc., 612-894-8200
NJ **Teaneck**
R.T. Reid Assoc., 201-692-0200
NY **E. Rochester**
Tri-Tech, 716-385-6500
NY **Endwell**
Tri-Tech, 607-754-1094
NY **Fayetteville**
Tri-Tech, 315-446-2881
NY **Fishkill**
Tri-Tech, 914-897-5611
NY **Melville**
R.T. Reid, 516-351-8833
NC **Charlotte**
Rep Inc., 704-563-5554
NC **Raleigh**
Rep Inc., 919-851-3007
OH **Cleveland**
Arthur H. Baier Co., 216-461-6161
OH **Dayton**
Arthur H. Baier Co., 513-276-4128
OH **Westlake**
Siliconix Inc., 216-835-4470
OK **Tulsa**
Elctrns. Mktg. Assoc., 918-492-0390
OR **Beaverton**
Blair Hirsh Co., 503-641-1875
TN **Jefferson City**
Rep Inc., 615-475-4105/9012/9013
TX **Carrollton**
Siliconix Inc., 214-385-4046/4047
TX **Grapevine**
EMA, 817-481-7502/7503, 817-488-6583/6584
TX **Houston**
EMA, 713-498-8120
WA **Lynnwood**
Blair Hirsh Co., Inc., 206-774-8151
WI **Wauwatosa**
Larsen Assoc., 414-258-0529
Can **Islington, Ontario**
Pipe Thompson, Ltd., 416-236-2355
Can **North Gower, Ontario**
Pipe Thompson, Ltd., 613-258-4067
Intl **Brazil, Sao Paulo**
Cosele Comercio e Servicos, TEL: 255-1733
Intl **India, Bombay**
Zenith Elctrns., TEL: 202 9464
Intl **Korea, Seoul**
A-Mee, TEL: 716-6883
Intl **Malaysia, Ipon**
Carter Semiconductor, TEL: 514-033
Intl **Philippines, Manila**
Alexan Commercial, TEL: 405952
Intl **Singapore, Orchard Towers**
Carter Semiconductor PTE. Ltd., TEL: 235 6653
Intl **Taiwan, Taipei**
Don Business Corp., TEL: 760 7801-3, 766-4515
Intl **Thailand, Bangkok**
Choakchai Elec. Supplies, TEL: 221-0432
Intl **Venzuela, Caracas**
P. Benavides SRL, TEL: 52-92-97

Distributors

AL **Huntsville**
Hamilton/Avnet, 205-837-7210
AL **Huntsville**
Marshall Industries, 205-881-9200
AL **Huntsville**
Pioneer/Huntsville, 205-837-9300
AZ **Phoenix**
Wyle, 602-249-2232
AZ **Tempe**
Hamilton/Avnet, 602-231-5100
CA **Anaheim**
Zeus West, Inc., 714-632-6880
CA **Canoga Park**
Marshall Industries, 818-999-5001
CA **Chatsworth**
Avnet Elctrns., 213-700-2600
CA **Chatsworth**
Hamilton Avnet, 818-700-6500
CA **Costa Mesa**
Avnet Elctrns., 714-754-6111
CA **Costa Mesa**
Hamilton Electro Sales, 714-641-4100
CA **Culver City**
Hamilton Electro Sales, 213-558-2121, 714-522-8200
CA **El Monte**
Marshall Industries, 818-442-7204
CA **El Segundo**
Wyle, 213-322-8100
CA **Irvine**
Marshall Industries, 714-660-0951
CA **Irvine**
Wyle, 714-863-9953
CA **Ontario**
Hamilton Avnet, 714-989-8309
CA **Rancho Cordova**
Marshall Electronics
CA **Rancho Cordova**
Wyle, 916-638-5282
CA **Reseda**
Jan Devices, 213-708-1100
CA **Sacramento**
Hamilton Avnet, 916-920-3150
CA **San Diego**
Hamilton/Avnet, 619-571-7510
CA **San Diego**
Wyle, 619-565-9171
CA **Santa Clara**
Wyle Distribution Grp., 408-727-2500
CA **Sunnyvale**
Bell Inds., 408-734-8570
CA **Sunnyvale**
Hamilton/Avnet, 408-743-3300
CA **Sunnyvale**
Marshall Industries, 408-732-1100
CO **Englewood**
Hamilton/Avnet, 303-740-1000
CO **Thornton**
Wyle Distribution Grp., 303-457-9953
CO **Wheatridge**
Bell Inds., 303-424-1985
CT **Danbury**
Hamilton/Avnet, 203-797-2800
CT **Milford**
Falcon Elect., 203-878-5272
CT **Wallingford**
Marshall Inds., 203-265-3822
FL **Altamonte Springs**
Pioneer Electrns., 305-834-9090
FL **Deerfield Beach**
Pioneer Elctrns., 305-428-8897
FL **Ft. Lauderdale**
Hamilton/Avnet, 305-971-2900
FL **Orlando**
Chip Supply, Inc., 305-298-7100
FL **St. Petersburg**
Hamilton/Avnet, 813-576-3930
FL **Winter Park**
Hamilton Avnet, 305-628-3888
FL **Winter Park**
Milgray Electronics, 305-647-5747
GA **Norcross**
Hamilton/Avnet, 404-447-7500
GA **Norcross**
Marshall Inds., 404-923-5750
GA **Norcross**
Pioneer, 404-448-1711
IL **Bensenville**
Hamilton/Avnet, 312-860-7780
IL **Elk Grove Village**
GBL/Goold Electrncs., 312-593-3222
IL **Elk Grove Village**
Pioneer/Chicago, 312-437-9680
IL **Schaumberg**
Marshall Industries, 312-490-0755
IN **Carmel**
Hamilton/Avnet, 317-844-9333
IN **Indianapolis**
Marshall Industries, 317-297-0483
IN **Indianapolis**
Pioneer/IN, 317-849-7300
IA **Cedar Rapids**
Hamilton/Avnet, 319-362-4757
KS **Lenexa**
Marshall Inds., 913-492-3121
KS **Overland Park**
Hamilton/Avnet, 913-888-8900
KS **Overland Park**
P.M.R. Inc., 918-881-0004
MD **Columbia**
Hamilton/Avnet, 301-995-3500, 301-621-5410
MD **Gaithersburg**
Marshall Inds., 301-840-9450

Siliconix (Cont)

MD	**Gaithersburg**	Pioneer/Washington, 301-921-0660
MA	**Burlington**	Marshall Inds., 617-272-8200
MA	**Burlington**	Milgray New England, 617-272-6800
MA	**Melrose**	Pro Comp Sales, 617-665-2340
MA	**Woburn**	Hamilton/Avnet, 617-935-9700
MI	**Grand Rapids**	Hamilton/Avnet, 616-243-8805
MI	**Livonia**	Hamilton/Avnet, 313-522-4700
MI	**Livonia**	Marshall Industries, 313-525-5850
MN	**Minneapolis**	Indl. Comps., 612-831-2666
MN	**Minnetonka**	Hamilton/Avnet, 612-932-0600
MN	**Minnetonka**	Pioneer/Twin Cities, 612-935-5444
MO	**Earth City**	Hamilton/Avnet, 314-344-1200
MO	**St. Louis**	Franklin Elctrns., 314-993-5333
NH	**Manchester**	Hamilton Avnet, 603-881-7435
NJ	**Cherry Hill**	Hamilton/Avnet, 609-424-0100
NJ	**Fairfield**	Hamilton/Avnet, 201-575-3390
NJ	**Fairfield**	Marshall Inds., 201-882-0320
NJ	**Marlton**	B.G.R. Associates, 609-983-1020
NJ	**Mt. Laurel**	Marshall Inds., 609-234-9100
NM	**Albuquerque**	Bell Inds., 505-292-2700
NM	**Albuquerque**	Hamilton/Avnet, 505-765-1500
NM	**Albuquerque**	Quatra Associates, 505-821-1455
NY	**Buffalo**	Summit Inc., 716-884-3450
NY	**Commack**	Falcon Electronics, 516-462-6350
NY	**East Syracuse**	Hamilton/Avnet, 315-437-2642
NY	**Endwell**	Marshall Inds., 607-754-1570
NY	**Farmingdale**	Milgray Elec., 516-420-9800
NY	**Hauppauge**	Hamilton Avnet, 516-231-9800
NY	**Hauppauge**	Marshall Inds., 516-273-2424
NY	**Port Chester**	Zeus Components, 914-937-7400
NY	**Rochester**	Hamilton/Avnet, 716-475-9130
NY	**Rochester**	Marshall Inds., 716-235-7620
NY	**Westbury**	Hamilton Avnet, 516-997-6868
NY	**Woodbury**	Pioneer, 516-921-8700
NC	**Charlotte**	Pioneer/N.C., 704-527-8188
NC	**Raleigh**	Hamilton/Avnet, 919-878-0819, X210
OH	**Cleveland**	Pioneer/Cleveland, 216-587-3600
OH	**Dayton**	Hamilton/Avnet, 513-433-0610
OH	**Dayton**	Marshall Industries, 513-236-8088
OH	**Dayton**	Pioneer/Dayton, 513-236-9900
OH	**Solon**	Marshall Industries, 216-248-1788
OH	**Warrensville Heights**	Hamilton/Avnet, 216-831-3500
OH	**Westerville**	Hamilton Avnet, 614-882-7004
OK	**Tulsa**	Quality Comps., 918-664-8812
OR	**Hillsboro**	Wyle, 503-640-6000
OR	**Lake Oswego**	Hamilton/Avnet, 503-635-8836
PA	**Horsham**	Pioneer Elctrns., 215-674-4000
PA	**Mt. Laurel**	Marshall Industries, 215-627-1920
PA	**Pittsburgh**	Hamilton Avnet, 412-281-4150
PA	**Pittsburgh**	Pioneer/Pittsburgh, 412-782-2300
TX	**Addison**	Quality Components, 214-387-4949
TX	**Austin**	Hamilton/Avnet, 512-837-8911
TX	**Austin**	Pioneer Elctrns., 512-835-4000
TX	**Austin**	Quality Comps., 512-835-0220
TX	**Austin**	Wyle Distribution, 512-834-9957
TX	**Dallas**	Pioneer Elctrns., 214-263-3168
TX	**Houston**	Hamilton/Avnet, 713-975-3500
TX	**Irving**	Hamilton/Avnet, 214-659-4151
TX	**Richardson**	Wyle Distribution, 214-235-9953
TX	**Richardson**	Zeus Comp., 214-783-7010
TX	**Sugarland**	Quality Components, 713-491-2255
UT	**Salt Lake City**	Hamilton/Avnet, 801-972-2800
UT	**Salt Lake City**	Sage Sales, 801-457-5451
UT	**Salt Lake City**	Wyle Laboratories-EMG, 801-974-9953
WA	**Bellevue**	Hamilton/Avnet, 206-453-5844
WA	**Bellevue**	Wyle Distribution Grp., 206-453-8300
WI	**Milwaukee**	Marsh Elctrns., Inc., 414-475-6000
WI	**New Berlin**	Hamilton/Avnet, 414-784-4510
Can	**Burnaby, British Columbia**	RAE Indl. Elctrns., Ltd., 604-291-8866
Can	**Calgary, Alberta**	Hamilton/Avnet, 403-230-3586
Can	**Downsview, Ontario**	Future Elctrns., 416-638-4771
Can	**Mississauga, Ontario**	Hamilton/Avnet, 416-677-7432
Can	**Nepean, Ontario**	Hamilton/Avnet, 613-226-1700
Can	**Ottawa, Ontario**	Future Elctrns., 613-820-8313
Can	**Pt. Claire, Quebec, Can**	Future Elctrns., 514-694-7710
Can	**St. Laurent, Quebec**	Hamilton/Avnet, 514-335-1000
Intl	**(India) Mtn. View, CA**	Fegu Electronics Inc., TEL: 415-961-2380
Intl	**Hong Kong, Aberdeen**	Gibb, Livingston & Co., Ltd., TEL: 5-558331
Intl	**Indonesia, Jakarta-Barat**	Sinar Electrik, TEL: (021) 623243
Intl	**Japan, Tokyo, Chiyoda-Ku**	Tomen, TEL: (03) 506-4670
Intl	**Mt. View, CA**	Intectra Inc., TEL: 415-967-8818
Intl	**Seoul, Korea**	Buseok Electronics, TEL: 265-5891
Intl	**Thailand, Bangkok**	Dynamic Supply Engineering, TEL: 392-8532

Silicon Solutions

Silicon Solutions Corporation
1380 Willow Road
Menlo Park, California 94025
415-321-8574

Silicon Systems

Silicon Systems Inc.
14351 Myford Road
Tustin, California 92680
714-731-7110
TWX: 910-595-2809

Specific product information:
Larry Pepper
Literature:
Larry Pepper
Price and delivery:
Larry Pepper

Sales Office & Representatives

AL	**Huntsville**	Technology Marketing Associates, Inc. (TMA), 205-883-7893, 205-882-1100
AZ	**Scottsdale**	Western Hightech Marketing, Inc., 602-949-0873
CA	**Carson**	Silicon Systems, Inc. (L.A. District), 213-532-1524
CA	**San Diego**	Hadden Associates, 619-565-9444
CA	**Santa Clara**	Magna Sales, 408-727-8753
CA	**Santa Clara**	Silicon Systems, 408-980-9771
CA	**Thousand Oaks**	SC Cubed, 805-496-7307
CA	**Tustin**	SC Cubed, 714-731-9206
CA	**Tustin**	Silicon Systems, Inc., 714-731-7110
CO	**Littleton**	Lange Sales, 303-795-3600
FL	**Largo**	Technology Marketing Associates (TMA), 813-536-3796
FL	**Melbourne**	Technology Marketing Associates, Inc. (TMA), 305-676-3776
FL	**Orlando**	Technology Marketing Associates, Inc. (TMA), 305-857-3760
FL	**Pompano Beach**	Technology Marketing Associates, Inc. (TMA), 305-942-0774
GA	**Atlanta**	Silicon Systems Inc., 404-955-9235
GA	**Atlanta**	Technology Marketing Associates, Inc. (TMA), 404-257-0374
IL	**Schaumburg**	Silicon Systems, Inc., 312-490-1944
IN	**Carmel**	Technology Marketing Corporation (TMC), 317-844-8462
IN	**Fort Wayne**	Technology Marketing Corporation (TMC), 219-432-5553

Silicon Systems (Cont)

KS	**Kansas City** B.C. Electronics, 913-342-1211
KS	**Wichita** B.C. Electronics, 316-722-0104
KY	**Louisville** Technology Marketing Corporation (TMC), 502-499-7808
MD	**Baltimore** Burgin-Kreh Associates, Inc., 301-265-8500, 710-862-1450
MA	**Concord** Silicon Systems, Inc., 617-371-1546
MI	**Brighton** A.P. Associates, 313-229-6550
MN	**Minneapolis** Com-Tek Sales, 612-888-7011
MO	**Bridgeton** B.C. Electronics, 314-291-1101
NV	**Carson City** Magna Sales, 702-883-1471
NJ	**Melville** R. T. Reid Associates, 516-351-8833
NJ	**Teaneck** R. T. Reid Associates, 201-692-0200
NM	**Albuquerque** Western High Tech Mktg., 505-884-2256
NY	**Syracuse** T-Squared, 315-463-8592
NY	**Victor** T-Squared, 716-924-9101
NC	**Raleigh** KZJ Components, 919-852-5990
OH	**Cincinatti** Makin Associates, 513-871-2424
OH	**Columbus** Makin & Associates, 614-481-8898
OH	**Solon** Makin & Associates, 216-248-7370
OR	**Hillsboro** Western Technical Sales (WES-TEK), 503-640-4621
PA	**Erdenheim** Omni Sales, 215-233-4600
TX	**Austin** Oeler & Menelaides, 512-452-1838
TX	**Houston** Oeler & Menelaides, 713-789-4426
TX	**Plano** Silicon Systems, 214-881-1417
TX	**Richardson** Deler & Menelaides, 214-690-6746
UT	**Salt Lake City** Lange Sales, 801-487-0843
VA	**Lynchburg** Burgin-Kreh Associates, 804-239-2626
WA	**Bellevue** Western Technical Sales (WES-TEK), 206-641-3900
WA	**Spokane** Western Technical Sales (WES-TEK), 509-922-7600
Can	**Downsview, Ontario** Har-Tech Electronics Ltd., 416-665-7773
Can	**Ottowa, Ontario** Har-Tech Electronics Ltd., 613-230-8431
Can	**Pointe Claire, Quebec** Har-Tech Electronics Ltd., 514-694-6110

Distributors

AL	**Huntsville** Hallmark Elctrns., 205-837-8700
AZ	**Phoenix** Hallmark Elctrns., 602-437-1200
CA	**Canoga Park** Hallmark Elctrns., 818-716-7300
CA	**Citrus Heights** Hallmark Elctrns., 916-722-8600
CA	**San Diego** Hallmark Elctrns., 619-268-1201
CA	**San Jose** Hallmark Elctrns., 408-946-0900
CA	**Torrance** Hallmark Elctrns., 213-217-8400
CA	**Tustin** Hallmark Elctrns., 714-669-4700
CO	**Englewood** Hallmark Elctrns., 303-790-1662
CT	**Wallingford** Hallmark Elctrns., 203-269-0100
FL	**Clearwater** Hallmark Elctrns., 813-530-4543
FL	**Orlando** Hallmark Elctrns., 305-855-4020
FL	**Pompano Beach** Hallmark Elctrns., 305-971-9280
GA	**Norcross** Hallmark Elctrns., 404-447-8000
IL	**Wooddale** Hallmark Elctrns., 312-860-3800
KS	**Lenexa** Hallmark Elctrns., 913-888-4747
MD	**Columbia** Hallmark Elctrns., 301-988-9800
MA	**Billerica** Hallmark Elctrns., 617-935-9777
MN	**Bloomington** Hallmark Elctrns., 612-854-3223
MO	**Earth City** Hallmark Elctrns., 314-291-5350
NJ	**Fairfield** Hallmark Elctrns., 201-575-4415
NJ	**Mount Loval** Hallmark Elctrns., 609-424-7300
NY	**Ronkonkoma** Hallmark Elctrns., 516-737-0600
NC	**Raleigh** Hallmark Elctrns., 919-872-0712
OH	**Cincinnati** Hallmark Elctrns., 513-563-5980
OH	**Solon** Hallmark Elctrns., 216-349-4632
OH	**Worthington** Hallmark Elctrns., 614-888-3313
OK	**Tulsa** Hallmark Elctrns., 918-665-3200
TX	**Austin** Hallmark Elctrns., 512-258-8848
TX	**Dallas** Hallmark Elctrns., 214-341-1147
TX	**Houston** Hallmark Elctrns., 713-781-6100
UT	**Murray** Hallmark Elctrns., 801-268-3779
WI	**New Berlin** Hallmark Elctrns., 414-762-3000
Intl	**Argentina, Buenos Aires** YEL S.R.L., TEL: 46-2211
Intl	**Australia, Victoria** R&D Electronics, TEL: 2439-2440
Intl	**Denmark** C-88, TEL: 02 24 48 88
Intl	**England, Essex** Pronto Electronic Systems Ltd., TEL: 01 554 6222
Intl	**Finland, ESPO021** Komdel Oy, TEL: 0-885011
Intl	**France, Boulogne** Data Dis, TEL: 1/605-6000
Intl	**France, Paris** ISC, TEL: (1) 506.42.75
Intl	**Germany, Munich** Atlantik Elektronik GmbH, TEL: (0 89) 8 57 20 86-89
Intl	**Greece, Athens** Peter Caritato & Assoc. Ltd., TEL: 01/3619379, 01/3623614
Intl	**Hong Kong, Hong Kong** CET LTD, TEL: 5-200922
Intl	**Israel, Tel Aviv** RAPAC, TEL: 03 47 71 15
Intl	**Italy** Cefra S.R.L., TEL: (02) 23.52.64, (02) 23.60.154
Intl	**Japan, Tokyo** Internix, TEL: 03 (369) 1101
Intl	**Norway, Nesbru** Hans Schive, TEL: 2-845160
Intl	**Seoul, Korea** Hanaro Corporation, TEL: (02) 782 0147, (02) 783 7141/2
Intl	**Singapore** Dynamar International, TEL: 7476188
Intl	**South Africa, Randburg** South Continental Devices, TEL: (011) 789-2400
Intl	**Sweden, Bexab, Taby** RAPAC, TEL: 08-7680560
Intl	**Taiwan, Taipei** Dynamar International, TEL: 5418251

Siltronics

Siltronics Ltd.
436 Hazeldean Rd.
Kanata, Ontario K2L 1T9
613-836-5003

Silvar-Lisco

Silvar-Lisco
1080 Marsh Rd.
Menlo Park, California 94025
415-853-6391
TWX: 910-373-2056

Specific product information:
Frank Lynch

SimuCad

SimuCad
920 Incline Way, Bldg. 2
Incline Village, Nevada 89450
702-831-1399

Specific product information:
Jiordano, Paul

Single Board Solutions

Single Board Solutions
7669 Rainbow Drive
Cupertino, California 95014
408-253-0181

Slicer Computers

Slicer Computers Inc.
2543 Marshall Street N.E.
Minneapolis, Minnesota 55418
612-788-9481

Solarcom Technology

Solarcom Technology, Inc.
P. O. Box 4715
Hayward, California 94544
415-489-3141

Solarise Enterprises

Solarise Enterprises Inc.
19220 Stevens Creek Blvd.
Cupertino, California 95014
408-446-9343

Solid State Micro Technology

Solid State Micro Technology for Music, Inc.
2076B Walsh Avenue
Santa Clara, California 95050
408-727-0917
TELEX: 171189

Specific product information:
Sales
Application engineering:
Ron Dow
Literature:
Ellen Myers
Price and delivery:
Dan Parks
Follow-up an order:
Ellen Myers

Sales Office & Representatives

Intl **France, Suresnes**
Intl. Semiconductor Corp., TEL: 5064275
Intl **Hong Kong, Kowloon**
Tektron Electronic, TEL: 3-856199
Intl **Italy, Rozzano (MI)**
SIGEP S.R.L., TEL: (02) 8258053
Intl **Japan, Tokyo**
Nippon Imex Corp., TEL: Tokyo 321-4415
Intl **Sweden, Taby**
I.C. Inventor, TEL: 08-756 50 24

Distributors

Intl **Korea, Seoul**
Dohan Industrial Co., TEL: 267-7865

Solitron Devices

Solitron Devices, Inc.
Semiconductor Division
8808 Balboa Avenue
San Diego, California 92123
619-278-8780

Sales Office & Representatives

Intl **France, Paris**
ERN, Composants ET Materell Electroniques, TEL: 956.00.11
Intl **Hong Kong, Kowloon**
Intl. Sales Corp., TEL: 3-807562, 3-808642
Intl **Israel, Ramat Hasharon**
R.D.T. Elctrns. Engrg., TEL: 212-995-5200
Intl **Italy, Milano**
Syscom Elettronica, TEL: 6.189.251/2/3
Intl **Korea, Seoul**
Taeil Trading Co., TEL: 22-6741, 22-6411
Intl **Switzerland, Baden-Dattwil**
W. Stolz AG, TEL: 056/84 01 51
Intl **United Kingdom, Surrey, England**
Consort Elctrns., Ltd., TEL: 252-871717
Intl **West Germany, Munich**
Bitronic GmbH, TEL: 089/4702098
Intl **West Germany, Stuttgard**
Bitronic GmbH, TEL: 07144 3201

Distributors

Intl **Australia, Victoria**
Instant Comp. Service, TEL: 95 9566
Intl **Brazil, Sao Paulo**
Aplicacoes Artimar, Ltda., TEL: 35-2452, 35-0747
Intl **Finland, Helsinki**
Oy Fintronic A-b, TEL: 601155
Intl **France, Paris**
ERN, Composants ET Materell Electroniques, TEL: 956.00.11
Intl **India, Bombay**
Nayar Elctrns. Ltd., TEL: 24 38 02
Intl **Israel, Ramat Hasharon**
R.D.T. Elctrns. Engrg., TEL: 212-995-5200
Intl **Israel, Tel Aviv**
R.D.T. Elctrns. Engrg.
Intl **Italy, Milano**
Syscom Elettronica, TEL: 6.189.251/2/3
Intl **Korea, Seoul**
Taeil Trading Co., TEL: 22-6741, 22-6411
Intl **Norway, Hvalstad**
Nordisk Elektronik (Norge) AS
Intl **Norway, Oslo**
Nordisk Elektronik (Norge) AS, TEL: 02/553893
Intl **United Kingdom, Surrey, England**
Consort Elctrns. Ltd., TEL: 252-871717
Intl **West Germany, Munich**
Bitronic GmbH, TEL: 089/4702098
Intl **West Germany, Stuttgard**
Bitronic GmbH, TEL: 07144 3201

Spectrum Software

Spectrum Software
1021 S. Wolfe Rd.
Sunnyvale, California 94086
408-738-4387

Sprague Electric

Sprague Electric Company
Semiconductor Division
115 Northeast Cutoff
Worcester, Massachusetts 01606
617-853-5000
TWX: 710-340-6304

Specific product information:
Interface (peripheral power)—Except Military .... P. Emerald
Interface (peripheral power)—Military .... W. Sullivan
Linear-Radio, Audio, SMPS .... G. Nielsen
Telecommunications .... S. Dumery
Literature:
Literature:
41 Hampden Rd., Mansfield, MA 02048
Sales Office & Representatives

Sprague Electric

Sprague Electric Company
Sensor Division
70 Pembroke Road, P.O. Box 917A
Concord, New Hampshire 03301
603-224-1961
TWX: 710-361-1495

Specific product information:
Hall-Effect I.C.s .... P. Champagne
Application engineering:
T. Wood
Literature:
41 Hampden Rd., Box 9102, Mansfield, Massachusetts 617-339-3701
Price and delivery:
P. Champagne
Place an order:
J Genest
Follow-up an order:
E. Leighton

Sales Office & Representatives

AL **Huntsville**
EPI Inc., 205-883-0520
AZ **Mesa**
Sprague Elec. Co., 602-244-0154, 602-831-6762
CA **Burlingame**
William J. Purdy Co., 415-347-7701
CA **Costa Mesa**
Sprague Elec. Co., 714-549-9913
CA **Inglewood**
Sprague Elec. Co., 213-649-2600
CA **San Diego**
R. David Miner Inc., 619-566-9891
CO **Denver**
William J. Purdy Co., 303-777-1411
CT **Farmington**
Ray Perron & Co., 203-673-4825
CT **New Milford**
Ray Perron & Co., 203-354-2569
CT **Trumbull**
Sprague Elec. Co., 203-261-2551
DC **Washington**
Sprague Elec. Co. (Gov't sales only), 202-337-7820
FL **Altamonte Springs**
Sprague Elec. Co., 305-831-3636
FL **Ft. Lauderdale**
Sprague Elec. Co., 305-491-7411
GA **Atlanta**
Elctrn. Mktg. Assocs., 404-448-1215
IL **Park Ridge**
Sprague Elec. Co., 312-296-6620
IN **Indianapolis**
Sprague Elec. Co., 317-253-4247
KS **Overland Park**
EPI Inc., 913-648-4154
MD **Laurel**
Sprague Elec. Co., 301-792-4890, 301-953-1717
MA **Framingham**
Sprague Elec. Co., 617-875-3200
MA **Needham**
Ray Perron & Co., 617-449-6162
MI **Jackson**
Sprague Elec. Co., 517-787-3934
MN **Minneapolis**
HMR, Inc., 612-888-2122
MO **St. Louis**
EPI Inc., 314-962-1411
NH **Dover**
Ray Perron & Co., 603-742-2321
NJ **Cherry Hill**
Trinkle Sales Inc., 609-795-4200
NJ **Wayne**
Sprague Elec. Co., 201-696-8200
NM **Albuquerque**
William J. Purdy Co., 505-266-7959
NY **Central Islip**
Sprague Elec. Co., 516-234-8700
NY **Larchmont**
Sprague Elec. Co., 914-834-4439
NY **Larchmont**
William Rutt, Inc., 914-834-8555
NY **Syracuse**
Paston-Hunter Co., 315-437-2843
NY **Syracuse**
Sprague Elec. Co., 315-437-7311
NC **Charlotte**
Sprague Elec. Co., 704-527-1306
NC **Raleigh**
Elctrn. Mktg. Assoc., 919-847-8800

Sprague Electric (Cont)

OH	**Beachwood** Elctrn. Salesmasters, Inc., 800-362-2616
OH	**Springfield** Sprague Elec. Co., 513-322-3881
OR	**Beaverton** William J. Purdy Co., 503-641-9373
SC	**Greenville** Elctrn. Mktg. Assocs., 803-233-4637
TX	**Austin** Sprague Elec. Co., 512-458-2514
TX	**Dallas** Sprague Elec. Co., 214-235-1256
UT	**Salt Lake City** William J. Purdy Co., 801-486-8557
VA	**Lexington** Sprague Elec. Co., 703-463-9161
WA	**Redmond** William J. Purdy Co., 206-882-3144
WA	**Seattle** Sprague Elec. Co., 206-632-7761
WA	**Vancouver** Sprague Elec. Co., 206-892-0361
WI	**Milwaukee** D. Dolin Sales, 414-482-1111
Can	**Ottawa, Ontario** Sprague Elec. of Can., 613-238-2542
Can	**Surrey, BC** Lenbrook Elec., 604-585-9599
Can	**Toronto, Ontario** Sprague Elec. of Can., 416-766-6123
Intl	**Belgium, Ronse** Sprague-Benelux, TEL: 055-21-53-22
Intl	**England, Salfords, Surrey** Sprague Elec. (U.K.) Ltd., TEL: 02934-5666
Intl	**France, Cachan** Sprague France S.A.R.L., TEL: (1) 547-6600
Intl	**Germany, Frankfurt** Sprague Elek. GmbH, TEL: 0611-60551
Intl	**Germany, Munchen** Sprague Elek. GmbH, TEL: 089-430-1077
Intl	**Hong Kong, Hong Kong** Sprague World Trade Corp., TEL: 3-7440010
Intl	**Italy, Milano** Sprague Elec. Co., TEL: 02-498-7891
Intl	**Japan, Tokyo** Sprague Japan K.K., TEL: (03) 348-5221
Intl	**Korea, Seoul** Tecnomil Ltd., TEL: (2) 783-9784
Intl	**Singapore, Singapore** Sprague World Trade Corp., TEL: 475-1826
Intl	**Sweden, Stocksund** Sprague Scandinavia A.B., TEL: (04) 08 8502 20
Intl	**Switzerland, Geneva** Sprague World Trade Corp., TEL: 98 4021
Intl	**Taiwan, Taipei** Sprague Taiwan/Tecnomil, TEL: (2) 771-9582

Sprague Solid State

Sprague Solid State
3900 Welsh Road
Willow Grove, Pennsylvania 19090
215-657-8400
TELEX: 476-1101
TWX: 510-661-7267

Stanford Telecommunications

Stanford Telecommunications, Inc.
2421 Mission College Boulevard
Santa Clara, California 95054
408-748-1010
TWX: 910-339-9531

Standard Microsystems

Standard Microsystems Corporation
35 Marcus Boulevard
Hauppauge, New York 11787
516-273-3100
TWX: 510-227-8898

Specific product information:
Pat O'Keefe

Application engineering:
Vince Rende
West Coast .... Paul Michaelson at Turk Enterprises 714-955-1575
South ... Mike O'Connell at Micro Systems Sales 214-252-5548
Europe ..... William Stypa at European Sales Office 49-89-919594 West Germany, Munich
Far East .... Larry Chen at SMC International Taipei, Taiwan

Literature:
Pat O'Keefe

Price and delivery:
Lynn Thurber

Follow-up an order:
Lynn Thurber

All other information:
Lynn Thurber
International Sales Information .... Cathy Peragine
Board Level Product .... Lucy Tarnell

Sales Office & Representatives

Intl	**Australia, Burwood, Victoria** Total Elctrns., TEL: (03) 288-4044
Intl	**Austria, Wien** D. Lackner, TEL: 43-222-752618
Intl	**Belgium, Brussels** Auriema Belgium S.A.N.V., TEL: 32-2-523-6295
Intl	**Brazil, San Paulo** Filcres, TEL: 011-233-7388
Intl	**Denmark, Ballerue** Tage Olsen, TEL: 45-2-658111
Intl	**England, Berks, United Kingdom** Manhatten Skyline, TEL: 44-52839735
Intl	**Finland, Espoo** Instrumentarium Elektronica, TEL: (90) 755-4144
Intl	**France, Sevres** Tekelec Airtronic, TEL: 33-1-534-7535
Intl	**Holland, Nederland** Auriema Nederland BV, TEL: 31-40-816565
Intl	**Hong Kong, Kowloon** Protech Components Ltd., TEL: 3-255-106
Intl	**Italy, Milano** Dott. Ing. Guiseppe De Mico, TEL: 02-95-20-551
Intl	**Japan, Tokyo** Internix, TEL: 03-369-1101
Intl	**Japan, Tokyo** Tomen Corp., TEL: 506-4670-6
Intl	**Korea, Seoul** Kortronics, TEL: 634-5497
Intl	**Norway, Oslo** National Elektro, TEL: (2) 644970
Intl	**South Africa, Capetown** Eagle Electric, TEL: 451421
Intl	**Spain, Madrid** Amitron S.A., TEL: 34-1-2485863
Intl	**Sweden, Solna** NAXAB, TEL: 08/98-51-40
Intl	**Switzerland, Zurich** Datacomp AG, TEL: 41-1-7302165
Intl	**Taiwan, Taipei** Multitech Intl. Corp., TEL: (02) 769-1225
Intl	**Taiwan, Taipei** S.M.C. Intl., TEL: 02-946-9666
Intl	**West Germany, Muenchen** Standard Microsystems, TEL: 49-89-919594
Intl	**West Germany, Muenchen** Tekelec Airtronic Gmbh, TEL: 89-594621

Distributors

Intl	**Australia, Burwood, Victoria** Total Elctrns., TEL: 03 288-4044
Intl	**Austria, Wein** O. Lackner, TEL: 43 222752618
Intl	**Belgium, Brussels** Auklema Belgium S.A.N.V., TEL: 322 523-6295
Intl	**Brazil, San Paulo** Fileres, TEL: 011 223-7388
Intl	**Denmark, Ballerup** Tage Olsen A.S., TEL: 45-2-658 111
Intl	**England, Berks** Manhatten Skyline Ltd., TEL: 44-628-39735
Intl	**Finland, Espoo** Instrumentarium Elektroniikka, TEL: 90755 4144
Intl	**France, Sevres** Tekelec Airtronics, TEL: 33-1-534-7535
Intl	**Hong Kong, Kowloon** Protech Components Ltd., TEL: 3-255106
Intl	**Italy, Milano** Dott. Ing. Guiseppe De Mico, TEL: 02 95 20 551
Intl	**Japan, Tokyo** Intemix Inc., TEL: 03-369-1101
Intl	**Japan, Tokyo** Tomen Elctrn., TEL: (506) 4670-6
Intl	**Korea, Seoul** Kortronics, TEL: 634-5497
Intl	**Netherlands, Holland** Auriema Nederaldn B.V., TEL: 3140-816565
Intl	**Norway, Oslo** National Elektro, TEL: (2) 644970
Intl	**South Africa, Capetown** Eagle Electric, TEL: 451421
Intl	**Spain, Madrid** Amitron Sa, TEL: 34-1-2485863
Intl	**Sweden, Solna** NAXAB, TEL: 08/98-51-40
Intl	**Switzerland, Zurich** Datacomp A.G., TEL: 41-17302165
Intl	**Taiwan, Taipei** Multitech Intl. Corp., TEL: (02) 769-1225
Intl	**Taiwan, Taipei** SMC Intl., TEL: 02-946-9666
Intl	**West Germany** Standard Microsystems GmbH, TEL: 49-89-919-594
Intl	**West Germany, Munchen** Tekelec Airtronic GmbH, TEL: (89) 594621

STC Microtechnology

STC Microtechnology
2270 S 88 Street
Louisville, Colorado 80027
303-673-5151

STD Microsystems

STD Microsystems
399 Sherman Avenue
Palo Alto, California 94306
415-327-6800

Stynetic Systems

Stynetic Systems Incorporated
Flowerfield—Building 1
Saint James, New York 11780
516-862-7670

Sunshine Semiconductor

Sunshine Semiconductor Inc.
2727 Newport Boulevard West, Suite 209
Newport Beach, California 92663
714-675-6171

Supertex

Supertex, Inc.
1225 Bordeaux Drive
Sunnyvale, California 94086
408-744-0100
TWX: 910-339-9388

Distributors

Intl **Australia, New Zealand**
Soanar Electronics, TEL: 8401222, TLX 790-34303 SOANAR
Intl **Denmark**
C-88 AS, TEL: 02-24-4888, TLX 411198 CEIGTY DK
Intl **England**
Dialogue Distribution Ltd., TEL: 0276-682001, TLX 851 858944 DIALOG G
Intl **France**
A2M, TEL: 3-945-9113, TLX 842-698376 AMM
Intl **France**
ASAP, TEL: 30438233, TLX 698887
Intl **Hong Kong, Hong Kong**
Wellmark Intl. Co., TEL: 3-7211763
Intl **Israel**
E.I.M. International Electronic Ltd., TEL: 37740400, TLX 922 342362
Intl **Italy, Milano**
Guiseppe De Mico, TEL: 029520551
Intl **Japan**
Microtek, Inc., TEL: 03 363 2317, TLX 781 2225276 SMITOK J
Intl **Japan**
System Marketing, TEL: 2542751
Intl **Korea**
General Components Co., Ltd., TEL: 567-4720, TLX K 23119
Intl **Netherlands**
MCA Tronix, TEL: TLX 844 38314
Intl **Norway**
National Electro A/S, TEL: 47-264-4970
Intl **Spain**
Amitron, S.A., TEL: 248-5863, TLX 831 45550 AMIT E
Intl **Sweden**
Svensk Teleindustri, TEL: 08 380 0320, TLX 854 13033
Intl **Switzerland**
Egli Fischer, TEL: 012020234
Intl **Switzerland**
Laser & Electronic Equipment Corp., TEL: 01-553330, TLX 845 52124 LASEK
Intl **Taiwan**
Luxen Technology Corp., TEL: 02-751 3733
Intl **West Germany**
Infratech, TEL: 040 81 75 78, TLX 841-213513 INFH D
Intl **West Germany**
Scantec, TEL: 89 13 40 93, TLX 841 5 213219 SCAN D

Synergy Microsystems

Synergy Microsystems Inc.
1820 Cambridge Ave.
Cardiff, California 92007
619-753-2191

Tangent Systems

Tangent Systems Corporation
2840 San Tomas Expwy., ½ 200
Santa Clara, California 95051
408-980-0600
Specific product information:
Dave Evans

Tatum Labs

Tatum Labs
33 Main St.
Newtown, Connecticut 06482
203-426-2184

Tau Zero

Tau Zero Inc.
9777 Harwin Drive, Suite 608
Houston, Texas 77036
713-952-9131

Technitrol

Technitrol, Inc.
1952 East Allegheny Avenue
Philadelphia, Pennsylvania 19134
215-426-9105
TELEX: 83-4245

Techno Inc.

Techno Inc.
14 Crandall Avenue
Pompton Lakes, New Jersey 07442
201-839-0740

Tektronix

Tektronix, Inc.
P.O. Box 500
Beaverton, Oregon 97077
503-644-0161
TWX: 910-467-8708

Sales Office & Representatives

Intl **Algeria, Algiers**
Measurelec, TEL: 59-12-66 & 59 15 74
Intl **Argentina, Buenos Aires**
Coasin S.A., TEL: 552-3185-5519363
Intl **Argentina, Moreno**
Coasin S.A., TEL: 33-0195
Intl **Australia, Adelaide**
Tektronix Australia Pty. Ltd., TEL: (08) 223-2811
Intl **Australia, Canberra**
Tektronix Australia Pty. Ltd., TEL: (062) 82-3655
Intl **Australia, Melbourne**
Tektronix Australia Pty. Ltd., TEL: (03) 813-1455
Intl **Australia, Perth**
Tektronix Australia Pty. Ltd., TEL: (09) 325-8433
Intl **Australia, Queensland**
Tektronix Australia Pty. Ltd., TEL: (07) 394-1155
Intl **Australia, Sydney**
Tektronix Australia Pty. Ltd., TEL: (02) 888-7066
Intl **Austria, Vienna**
Tektronix Ges.m.b.H., TEL: (222) 68 66 02
Intl **Bangladesh, Dacca**
A.Q. Chowdury & Co., TEL: 252 329 312492
Intl **Belgium, Bruxelles**
Tektronix nv/sa, TEL: 02/720 80 20
Intl **Bolivia, La Paz**
Coasin Bolivia S.R.L., TEL: (2) 340962
Intl **Brazil, Rio de Janeiro**
Tektronix Industria e Comercio Ltda., TEL: (021) 240-7370
Intl **Brazil, Sao Paulo**
Tektronix Industria e Comercio Ltda., TEL: (011) 543-1911
Intl **Chile, Santiago**
Equipos Industriales S.A.C.I., TEL: (2) 382-942
Intl **Colombia, Bogota**
Selectronica Ltd., TEL: 263 28 74
Intl **Costa Rica, San Jose**
Electro-Impex, S.A., TEL: 21-59-54
Intl **Denmark, Herlev**
Tektronix A/S, TEL: (02) 84 56 22
Intl **Ecuador, Quito**
Proteco Coasin Cia Ltda., TEL: 52-6759, 52-9684
Intl **Egypt, Cairo**
Giza Sys. Engrg. Co., TEL: 841200, 849399
Intl **England, Channel Islands, Guernsey**
Tektronix Ltd., TEL: Guernsey (0481) 35781
Intl **Finland, Helsinki**
Tektronix O/Y, TEL: 90-722 400
Intl **France, Aix-Les-Milles**
Tektronix, TEL: (42) 26 62 03
Intl **France, Les Ulis Cedex**
Tektronix, TEL: (6) 907 78 27
Intl **France, Lyon**
Tektronix, TEL: (7) 876 40 03
Intl **France, Rennes**
Tektronix, TEL: (99) 51 21 16
Intl **France, Strasbourg**
Tektronix, TEL: (88) 39 49 35
Intl **France, Toulouse**
Tektronix, TEL: (61) 40 24 50
Intl **Germany, Berlin-West**
Tektronix Ges.m.b.H., TEL: (030) 3139081
Intl **Germany, Hamburg**
Tektronix Ges.m.b.H., TEL: (040) 54830
Intl **Germany, Karlsruhe**
Tektronix Ges.m.b.H., TEL: (0721) 376081
Intl **Germany, Koln**
Tektronix Ges.m.b.H., TEL: (0221) 37980
Intl **Germany, Munchen**
Tektronix Ges.m.b.H., TEL: (089) 14851
Intl **Germany, Nurnberg**
Tektronix Ges.m.b.H., TEL: (0911) 646081
Intl **Greece, Athens**
Eltronics Limiogs, TEL: 721-0669, 721-1860
Intl **Hong Kong, Hong Kong**
Schmidt & Co., (H.K.) Ltd., TEL: 5-8521222
Intl **Iceland, Reykjavik**
Kristjan O. Skagfjord Ltd., TEL: (91) 24120
Intl **India, Bangalore**
Hinditron Svcs. Private Ltd., TEL: 33139
Intl **India, Bombay**
Hinditron Svcs. Private Ltd., TEL: 8125344-8121316
Intl **India, Calcutta**
Hinditron Svcs. Ltd., TEL: 447541
Intl **India, New Delhi**
Hinditron Svcs. Ltd., TEL: 6410380
Intl **Indonesia, Jakarta**
P.T. Dwi Tunggal Jaya Sakti, TEL: 734512-734619
Intl **Israel, Tel Aviv**
Eastronics Ltd., TEL: 475151
Intl **Italy, Milano**
Tektronix S.p.A., TEL: (2) 8466446
Intl **Italy, Roma**
Tektronix S.p.A., TEL: (6) 8278041
Intl **Italy, Torino**
Tektronix S.p.A., TEL: (11) 3351143

Tektronix (Cont)

Intl **Japan, Fukuoka**
Sony/Tektronix Corp., TEL: 472-2626 (area 09/Fukuoka)
Intl **Japan, Nagoya**
Sony/Tektronix Corp., TEL: 581-3547 (area 052/Nagoya)
Intl **Japan, Osaka-shi**
Sony/Tektronix Corp., TEL: 947-0321 (area 06/Osaka)
Intl **Japan, Sendai**
TEL: (222) 67-2181
Intl **Japan, Sendai**
Sony/Tektronix Corp., TEL: (222) 67-2181
Intl **Japan, Tokyo**
Sony/Tektronix Corp., TEL: 448-4611 (area 03/Tokyo)
Intl **Japan, Tsuchiura**
Sony/Tektronix Corp., TEL: (298) 24-2602
Intl **Jordan, Amman**
Consult-Tel, TEL: 36668
Intl **Korea, Seoul**
Myoung Corp., TEL: (2) 843-9942-832-1225
Intl **Kuwait, Safat**
Tareq Co., TEL: 436100 & 436045
Intl **Lebanon, Beirut**
Projects S.A.L., TEL: 331680
Intl **Malaysia, Petaling Jaya, Selangor**
MeComb Malaysia Sdn. Bhd., TEL: 03-743422
Intl **Mexico, Mexico**
Tektronix S.A. de C.V., TEL: (905) 568-6211
Intl **Netherlands, Amstelveen**
Tektronix Intl., Inc. European Mktg. Centre, TEL: (20) 471146
Intl **Netherlands, Badhoevedorp**
Tektronix Holland N.V., TEL: 02968-1456
Intl **New Zealand, Auckland**
McLean Information Ltd., TEL: 587-037/501-801/501-219
Intl **New Zealand, Wellington**
McLean Information Ltd., TEL: 851-450/844-425
Intl **Norway, Oslo**
Tektronix Norge A/S, TEL: (02) 64 57 70
Intl **Pakistan, Karachi**
Pak-Land Corp., TEL: 437315, 438084
Intl **Panama**
Executive Mktg. Corp., TEL: 63-6613, 63-6644
Intl **Peru, Lima**
Importaciones y Representaciones Electronicas S.A., TEL: 28-86-50/27-2076
Intl **Philippines, Makati, Rizal**
Philippine Elctrn. Inds., Inc., TEL: 673-4321/2/3/4
Intl **Portugal, Lisbon**
Decada Equipamentos de Electronica Lda., TEL: 2103420
Intl **Saudi Arabia, Dhahran**
Al Rushaid Trading Co., TEL: 010-9663/8980028
Intl **Singapore, Singapore**
MeComb, TEL: 2713333
Intl **South Africa, Durban**
Protea Physical & Nuclear Instrumentation (Pty.) Ltd., TEL: (31) 39-1100
Intl **South Africa, Goodwood**
Protea Physical & Nuclear Instrumentation (Pty.) Ltd., TEL: (21) 59-5121
Intl **South Africa, Wynberg**
Protea Physical & Nuclear Instrumentation (Pty.) Ltd., TEL: (27 11)786-3647
Intl **Spain, Barcelona**
Tektronix Espanola S.A., TEL: (93) 330-2008
Intl **Spain, Madrid**
Tektronix Espanola S.A., TEL: (91) 404-1011
Intl **Sri Lanka, Colombo**
Stewart Roche Ltd., TEL: 25846/7/8, 25847, 25848
Intl **Sweden, Gothenburg**
Tektronix AB, TEL: 031/42 70 35
Intl **Sweden, Solna**
Tektronix AB, TEL: 08/83 00 80
Intl **Switzerland, Zug**
Tektronix Intl. A.G., TEL: 042 21 91.92
Intl **Syria, Damascus**
General Trading Co., TEL: 114807, 224170, 559108
Intl **Taiwan, Taipei**
Heighten Trading Co. Ltd., TEL: 551 9916
Intl **Thailand, Bangkok**
Dynamic Supp. Engrg. R.O.P., TEL: 392-8532, 5313, 391-9571
Intl **Tunisia, Tunisie**
Societe El Eslek, TEL: 244372, 243939
Intl **Turkey, Ankara**
TEL: 171512
Intl **Turkey, Ankara**
Erkman Elektronik Aletler, TEL: 171512
Intl **Turkey, Istanbul**
Erkman Elektronik Aletler, TEL: 44 15 46/44 76 51
Intl **United Kingdom, Cheadle, Stockport**
Tektronix U.K. Ltd., TEL: 061-428-0799
Intl **United Kingdom, Herts**
Tektronix U.K. Ltd., TEL: Harpenden (5827) 63141
Intl **United Kingdom, Livingston, West Lothian**
Tektronix U.K. Ltd., TEL: Livingston (506) 32766/7
Intl **United Kingdom, Maidenhead, Berkshire**
Tektronix U.K. Ltd., TEL: 0628-73211
Intl **Uruguay, Montevideo**
Coasin Uruguaya S.R.L., TEL: 78-90-15/78-92-04
Intl **Venezuela, Caracas**
Equilab, C.A., TEL: 34-46-26/34-17-77/34-50-68
Intl **Venezuela, Maracaibo**
Equilab, C.A., TEL: 524578/527490
Intl **Zambia, Lusaka**
Baird & Tatlock (Zambia) Ltd., TEL: 75315/6
Intl **Zambia, Ndola**
Baird & Tatlock (Zambia) Ltd., TEL: 3522 & 2253/4/6

Tektronix-CAE Systems

Tektronix-CAE Systems
5302 Betsy Ross Dr.
Santa Clara, California 95054
408-727-1234
TELEX: 821378 CAESYSTEMS

Sales Office & Representatives

Can **Barrie, Ontario**
Tektronix Canada, 705-737-2700
Intl **Netherlands, Amstelveen**
Tektronix Europe B.V., TEL: (20) 471146

Tektronix

Tektronix-Integrated Circuits Operation
P.O. Box 500 M/S 59-420
Beaverton, Oregon 97077
503-627-2515
TWX: 910-467-8708

Tektronix

Tektronix-Software Development Products Div.
P.O. Box 14752
Portland, Oregon 97214
800-342-5548
TWX: 910-467-8708
TELEX: Telex: 151754
Literature:
800-342-5548

Teledyne Crystalonics

Teledyne Crystalonics
147 Sherman Street
Cambridge, Massachusetts 02140
617-491-1670

Sales Office & Representatives

Intl **Belgium, Brussels**
Microtron, TEL: 02-5232217
Intl **Denmark, Copenhagen**
E. V. Johanssen, TEL: 451839022
Intl **France, Paris**
Composants Et Produits Electroniques, TEL: 3-9474140
Intl **Germany, Heilbronn**
Sinus Elctrns., TEL: 07131/52077
Intl **India, Bombay**
Elctrn. Entprs., TEL: 22-8827096
Intl **Israel, Tel Aviv**
STG Intl, TEL: 03-248231
Intl **Japan, Tokyo**
Teledyne Japan K.K., TEL: 03-4038141
Intl **Netherlands, A.J. Capelle, A.D. IJsell**
Alcom Electronics, TEL: 010-519533
Intl **Sweden, Vallingby**
Svensk Tele Industri AB, TEL: 08 380320
Intl **Switzerland, Zurich**
G & P Elctrn. AG, TEL: 01-644555
Intl **Taiwan, Taipei**
Telestar Intl. Corp., TEL: (02) 7037111-4
Intl **United Kingdom, Oxfordshire**
Microelectronics Tech. Ltd., TEL: 08446-8920

Teledyne Philbrick

Teledyne Philbrick
Allied Drive at Route 128
Dedham, Massachusetts 02026
617-329-1600
326-6313
TWX: 710-348-6726
TELEX: TELEX 212-711
Specific product information:
Sales Department
Application engineering:
Sales Department
Literature:
Publications Dept.
Price and delivery:
Sales Department
Follow-up an order:
Customer Service Dept.
All other information:
Product Sales Dept.

Sales Office & Representatives

Intl **France, Levallois-Perret**
Teledyne Philbrick France, TEL: (1) 757-19-40
Intl **Japan, Osaka**
Teledyne Philbrick Japan, TEL: (06) 365 0431

Teledyne Philbrick (Cont)

Intl **Japan, Tokyo**
Teledyne Philbrick Japan, TEL: 403-8921
Intl **United Kingdom, Middlesex**
Teledyne Philbrick UK, TEL: (01) 897-2501
Intl **West Germany, Wiesbaden**
Teledyne Philbrick Germany, TEL: (6121) 7680

Distributors

Intl **Austria, Voesendorf**
Kontron GmbH & Co., KG, TEL: 0222-670631
Intl **Belgium, Keerbergen**
Microtron P.V.B.A. Int'l., TEL: 016/600586
Intl **Denmark, Lyngby**
Knud Kamuk Aps., TEL: (02) 88 38 33
Intl **Finland, Helsinki**
Turion OY, TEL: 372 144
Intl **France, Antony**
Almex, TEL: 666-21 12
Intl **France, St. Priest en Jarez**
Feutrier, Sa, TEL: (77) 746733
Intl **Greece, Athens**
Demetrius C. Tzitzinias & Sons, TEL: (00 30 1) 9344790
Intl **Hong Kong, Hong Kong**
Schmidt & Co. Ltd., TEL: 5-8330222
Intl **India, Bombay**
Elctrn. Entprs., TEL: 44 30 96
Intl **Ireland, Dublin**
Neitronix Ltd., TEL: (01) 501845
Intl **Israel, Givatayim**
E.I.M. Int'l. Elctrns. Ltd., TEL: (03) 744041
Intl **Italy, Milano**
Eledra, TEL: (02) 34 97 51
Intl **Japan, Tokyo**
Pico Inc., TEL: (03) 490-5881
Intl **Korea, Seoul**
Vine Overseas Trading Corp., TEL: 266-1663
Intl **Netherlands, Amstelveen**
Klees Elctrns. B.V., TEL: 020-434351
Intl **New Zealand, Auckland**
Professional Elctrns., Ltd., TEL: 493-029
Intl **Norway, Oslo**
Electronix A/S, TEL: 02-229850
Intl **Portugal, Lisbon**
Ditram Comps. e Elctrna., Lda., TEL: 45313
Intl **Singapore, Asia**
Microtronics Assocs. PTE Ltd., TEL: (786) 34929
Intl **South Africa, Craighall**
K. Baker Assocs., (Pty) Ltd., TEL: 788-1700/1/2
Intl **Spain, Madrid**
Amitron S.A., TEL: 247 93 13-248 58 63
Intl **Sweden, Bromma**
Scancopter AB, TEL: 08/289425
Intl **Switzerland, Zurich**
Datacomp A.G., TEL: 01732165
Intl **Taiwan, Taipei**
Don Business Corp., TEL: 5817623
Intl **Taiwan, Taipei**
Indl. Elctrns., TEL: (02) 771-4257
Intl **United Kingdom, Somerset**
The Monolith Elctrns. Co., Ltd., TEL: (0460) 74321

Teledyne Semiconductor

Teledyne Semiconductor
1300 Terra Bella Avenue
P.O. Box 7267
Mountain View, California 94039-7267
415-968-9241
TWX: 910-379-6494
Specific product information:
ext. 365 & 251
Application engineering:
ext. 241
Literature:
ext. 442 & 239
Price and delivery:
ext. 304, 441 & 442
Follow-up an order:
ext. 304, 441 & 442

Sales Office & Representatives

Intl **England, Middlesex**
Teledyne Semiconductor, TEL: (44) 01-897-2503
Intl **Hong Kong, Kowloon**
Teledyne Semiconductor, TEL: 852 3-240122
Intl **Israel, Tel Aviv**
RN Electronics Ltd., TEL: 707129
Intl **Korea, Seoul**
Vine Overseas Trading Corp., TEL: 266-1663, 265-3892
Intl **Taiwan, Taipei**
Timkuo Taiwan Ltd., TEL: 5638478/9
Intl **West Germany, Wiesbaden, Tiengen**
Teledyne Semiconductor, TEL: (49) 6121 768131

Distributors

Intl **Australia, Victoria**
Soanar Elctrns. Pty. Ltd., TEL: 890661
Intl **Brazil, Sao Paulo**
Filcres, TEL: (011) 223-7388
Intl **Denmark, Herlev**
Nordisk Elecktronik A/S, TEL: 02-842000
Intl **England, Buckinghamshire**
Macro Mktg. Ltd., TEL: 44-753-3544
Intl **England, Cleveland**
Norsem Elctrns. Grp., TEL: (0429) 33501
Intl **England, Roxburghshire**
Semicomps Northern Ltd., TEL: 2366 KELSO
Intl **Finland, Helsinki**
Fintronic A/B, TEL: 90-6926022
Intl **France, Boulogne**
Satek, TEL: 01-6090805
Intl **India, Madras**
Micro Elctrns. Type II, 23, TEL: 413893
Intl **Italy, Milano**
Eledra S.P.A., TEL: 02-3493041
Intl **Italy, Milano**
Mesa S.P.A., TEL: 02-434333
Intl **Japan, Tokyo**
Sil-Walker, TEL: 03-341-3651
Intl **Japan, Tokyo**
Teijin Advanced Prods. Corp., TEL: 03-506-4670/4676
Intl **Netherlands, Capelle a.d. Ijssel**
Alcom Elctrns., TEL: 01-519533
Intl **Norway, Hvalstad**
Nordisk Elektronik (Norge) A/S, TEL: 02-78 62 10
Intl **South Africa, Johannesburg**
O & C Alexander Sales (Pty.) Ltd., TEL: 724-9366/7/8
Intl **South Africa, Transvaal**
Fairmont Elctrns. Ltd., TEL: 48-6421/48-6481
Intl **Sweden, Stockholm**
Nordisk Elektronik A/B, TEL: 08-635040
Intl **Switzerland, Zurich**
ENA AG, TEL: 01/645757
Intl **Switzerland, Zurich**
Omni Ray AG, TEL: 01/2520766
Intl **West Germany, Bechtersbohl**
Semitron Electronik GmbH, TEL: 07742/7011
Intl **West Germany, Hannover-Linden**
T. H. Henskes, TEL: 0511/456082
Intl **West Germany, Muhlweg**
Hot Elctrn., TEL: 089/6111092
Intl **West Germany, Nettetal**
Omni Ray GmbH, TEL: 49-2153-7961
Intl **West Germany, Uterhaching**
Metronix GmbH, TEL: 089/6114063

Telefunken

AEG-Telefunken Corporation
P.O. Box 3800, Route 22 at Orr Drive
Somerville, New Jersey 08876
201-722-9800
TELEX: 833409

TLSI, Inc.

TLSI, Inc.
790 Park Avenue
Huntington, New York 11743
516-549-6300
FAX 516-549-6046
TWX: 510-226-6983

Telesis Systems

Telesis Systems
2 Omni Way
Chelmsford, Massachusetts 01824
617-256-2300

Teletek Enterprises

Teletek Enterprises, Inc.
4600 Pell Drive
Sacramento, California 95838
916-920-4600

Telmos

Telmos Inc.
740 Kifer Road
Sunnyvale, California 94086
408-732-4882
TWX: 910-339-9623

Sales Office & Representatives

Intl **Denmark, Glostrup**
ITT Components Group, TEL: 45-2-451822
Intl **Finland, Helsinki**
Turion Oy, TEL: 358-0-372144
Intl **France,Nanterre**
Gedis, TEL: 33-1-204-0404
Intl **Israel, Tel Aviv**
Telsys Ltd., TEL: 972-3-494891/2, 972-3-494891/2/3
Intl **Japan, Tokyo**
Dainichi Contronics Inc., TEL: 81-3-2657381
Intl **Norway, Oppegard**
Eurodata, TEL: 47-2-802892
Intl **Singapore**
Chartered-Telmos Design Pte, Ltd., TEL: 2612444/2651066
Intl **Switzerland, Zurich**
Dimos AG, TEL: 41-1626140
Intl **United Kingdom, Middlesex**
Pascall Electronics Ltd., TEL: 01-979-0123
Intl **United Kingdom, Oxon**
Expotech, TEL: 44-295-61138
Intl **West Germany, Eltiville**
Elcowa GmbH, TEL: 49-711-79-7041
Intl **West Germany, Frankfurt**
Kraus Industrie Elektronik GmbH, TEL: 069-59-07-56
Intl **West Germany, Munchen**
GME, TEL: 49-89-431-2602

Teltone

Teltone Corporation
10801-120th Avenue NE
Kirkland, Washington 98033
206-827-9626
TWX: 910-449-2862

Specific product information:
Barbara Graverholt
Application engineering:
Jim Carefoot
Literature:
Sales Support Department
Price and delivery:
Order Entry Department
Follow-up an order:
Order Entry Department
All other information:
Barbara Graverholt

Sales Office & Representatives

Intl	**Indonesia, Jakarta** Pt. Rigunggunung Dwipa
Intl	**Japan, Tokyo** Japan Direx Corp., TEL: (81) (03) 585 7801
Intl	**Peru, Lima** Ascomtel SRL, TEL: 479 918

Distributors

Intl	**Australia, Chatswood** T.R. Services Pty. Ltd.
Intl	**Chile, Santiago** Compania Standard Electric S.A.C., TEL: (2) 515 515
Intl	**Colombia, Bogota** Diatelco S.A., TEL: 2119068
Intl	**Denmark, Herlev** Inotec A/S, TEL: (2) 948 033
Intl	**Ecuador, Guayaquil** Grafcomp, TEL: (4) 512 092
Intl	**England, Bristol** Chesilvale Ltd., TEL: (272) 277 162
Intl	**Finland, Helsinki** Norecom Oy, TEL: 90 520 552
Intl	**France, Sevres** S.A. Tekelec-Airtronic, TEL: (1) 534 7535
Intl	**Hong Kong, Wanchai** Jardine Engineering Corp., Ltd., TEL: 284422
Intl	**Italy, Rome** Stelit S.R.L., TEL: (6) 501 1551
Intl	**Korea, Seoul** Sejin Inds., Inc., TEL: (2) 753 4413
Intl	**Kuwait, Safat** Kuwaiti Danish Computer Co., TEL: 830 160-1
Intl	**Malaysia, Selangor** Emtel
Intl	**Netherlands, Almelo** Group 2000 Nederland B.V., TEL: (5490) 21616
Intl	**Norway, Tonsberg** UMI A.S., TEL: (33) 86 000
Intl	**Singapore** Comtel (S) Pte. Ltd., TEL: 296-0905/6
Intl	**Sweden, Vallingby** Com-Trade AB, TEL: (8) 370 240
Intl	**Switzerland, Rueti** Group 2000 AG, TEL: (55) 317 444
Intl	**Taiwan, Taipei** Vidar-SMS Co. Ltd. (Sun Moon Star Co.), TEL: (2) 581 8521
Intl	**Thailand, Bangkok** R.S. Telecomm Part., TEL: (2) 281 3733
Intl	**Venezuela, Caracas** Applewhite S.A., TEL: (2) 575 3020
Intl	**West Germany, Martinsried** Allmos Elctrn. GmbH, TEL: (89) 857 2086-89

Teradyne

Teradyne
321 Harrison Ave.
Boston, Massachusetts 02118
617-482-2700

Texas Instruments, Inc.

Texas Instruments, Inc.
Semiconductor Group
P.O. Box 401560
Dallas, Texas 75240
214-995-2011
TWX: 910-867-4702

Sales Office & Representatives

AL	**Huntsville** Sales Office, 205-837-7530
AZ	**Phoenix** Sales Office, 602-995-1007
CA	**Irvine** Sales Office, 714-660-8187
CA	**Sacramento** Sales Office, 916-929-1521
CA	**San Diego** Sales Office, 714-278-9601
CA	**Santa Clara** Sales Office, 408-980-9000
CA	**Torrence** Sales Office, 213-217-7010
CA	**Woodland Hills** Sales Office, 213-704-7759
CO	**Aurora** Sales Office, 303-368-8000
CT	**Wallingford** Sales Office, 203-269-0074
FL	**Ft. Lauderdale** Sales Office, 305-973-8502
FL	**Maitland** Sales Office, 305-660-4600
FL	**Tampa** Sales Office, 813-870-6420
GA	**Norcross** Sales Office, 404-662-7900
IL	**Arlington Heights** Sales Office, 312-640-2925
IN	**Ft. Wayne** Sales Office, 219-424-5174
IN	**Indianapolis** Sales Office, 317-248-8555
IA	**Cedar Rapids** Sales Office, 319-395-9550
MD	**Baltimore** Sales Office, 301-944-8600
MA	**Waltham** Sales Office, 617-895-9100
MI	**Farmington Hills** Sales Office, 313-553-1500
MN	**Eden Prairie** Sales Office, 612-828-9300
MO	**Kansas City** Sales Office, 816-523-2500
MO	**St. Louis** Sales Office, 314-569-7600
NJ	**Iselin** Sales Office, 201-750-1050
NM	**Albuquerque** Sales Office, 505-345-2555
NY	**East Syracuse** Sales Office, 315-463-9291
NY	**Endicott** Sales Office, 607-754-3900
NY	**Melville** Sales Office, 516-454-6600
NY	**Pittsford** Sales Office, 716-385-6770
NY	**Poughkeepsie** Sales Office, 914-473-2900
NC	**Charlotte** Sales Office, 704-527-0930
NC	**Raleigh** Sales Office, 919-876-2725
OH	**Beachwood** Sales Office, 216-464-6100
OH	**Dayton** Sales Office, 513-258-3877
OK	**Tulsa** Sales Office, 918-250-0633
OR	**Beaverton** Sales Office, 503-643-6758
PA	**Coraopolis** Sales Office, 412-771-8550
PA	**Ft. Washington** Sales Office, 215-643-6450
TX	**Austin** Sales Office, 512-250-7655
TX	**Houston** Sales Office, 713-778-6592
TX	**Richardson** Sales Office, 214-680-5082
TX	**San Antonio** Sales Office, 512-496-1779
UT	**Murray** Sales Office, 801-266-8972
VA	**Fairfax** Sales Office, 703-849-1400
WA	**Redmond** Sales Office, 206-881-3080
WI	**Brookfield** Sales Office, 414-785-7140
Can	**Nepean, Ontario** Sales Office, 613-726-1970
Can	**Richmond Hill, Ontario** Sales Office, 416-884-9181
Can	**St. Laurent, Quebec** Sales Office, 514-334-3635
Intl	**Argentina, Buenos Aires** Sales Office, TEL: 1-394-3008
Intl	**Australia, Elizabeth** Sales Office, TEL: 08-255-2066
Intl	**Australia, South Melbourne** Sales Office, TEL: 03-267-4677
Intl	**Australia, Sydney** Sales Office, TEL: 02-887-1122
Intl	**Austria, Brunn/Gebirge** Sales Office, TEL: 2236-846210
Intl	**Belgium, Brussels** Sales Office, TEL: 02/720.80.00
Intl	**Brazil, Sao Paulo** Sales Office, TEL: 0815-6166
Intl	**Denmark, Herlev** Sales Office, TEL: 2-91-7400
Intl	**Finland, Helsinki** Sales Office, TEL: (90) 7013133
Intl	**France, Ecully** Sales Office, TEL: (7) 833-04-40
Intl	**France, Marseille** Sales Office, TEL: (91) 37-25-30
Intl	**France, Rennes** Sales Office, TEL: (99) 31-54-86
Intl	**France, Strasbourg Cedex** Sales Office, TEL: (88) 22-12-66
Intl	**France, Toulouse** Sales Office, TEL: (61) 44-18-19
Intl	**France, Villacoublay** Sales Office, TEL: (3) 946-97-12
Intl	**France, Villeneuve-Loubet** Sales Office, TEL: (93) 20-01-01
Intl	**Germany, Berlin** Sales Office, TEL: 030-8827365
Intl	**Germany, Eschborn** Sales Office, TEL: 06196-8070
Intl	**Germany, Essen** Sales Office, TEL: 0201-24250
Intl	**Germany, Freising** Sales Office, TEL: 8161-80-4591
Intl	**Germany, Hamburg** Sales Office, TEL: 76-040-220-1154

Texas Instruments, Inc. (Cont)

Intl	**Germany, Hannover**	Sales Office, TEL: 0511-648021
Intl	**Germany, Koblenz**	Sales Office, TEL: 0261-35044
Intl	**Germany, Munich**	Sales Office, TEL: 81089-911006
Intl	**Germany, Neilingen**	Sales Office, TEL: 0711-547-001
Intl	**Hong Kong, Kowloon**	Sales Office, TEL: 3-722-1223
Intl	**Ireland, Dublin**	Sales Office, TEL: 01 831311
Intl	**Italy, Bologna**	Texas Instruments, TEL: 051 355851
Intl	**Italy, Cittaducale**	Texas Instruments Semiconduttor Italia Spa, TEL: 0746 694.1
Intl	**Italy, Milan**	Sales Office, TEL: 02-253-2541
Intl	**Italy, Rome**	Sales Office, TEL: 06-9003241
Intl	**Italy, Torino**	Sales Office, TEL: 011-774545
Intl	**Japan, Nagoya**	Sales Office, TEL: 052-583-8961
Intl	**Japan, Osaka**	Sales Office, TEL: 06-204-1881
Intl	**Japan, Tokyo**	Sales Office, TEL: 03-498-2111
Intl	**Korea, Seoul**	Sales Office, TEL: (02) 462-8001
Intl	**Mexico, Mexico City**	Sales Office, TEL: 5-514-3003
Intl	**Middle East, Arabian Gulf**	Sales Office, TEL: 973-27 46 81
Intl	**Netherlands, Holland**	Sales Office, TEL: 020-5602911
Intl	**Norway, Oslo**	Sales Office, TEL: 02-155090
Intl	**Philippines, Metro Manila**	Sales Office, TEL: 2-8188987
Intl	**Portugal, Maia**	Sales Office, TEL: 948-1003
Intl	**Singapore, Republic of, Kallang Sector**	Sales Office, TEL: 747-2255
Intl	**Spain, Madrid**	Sales Office, TEL: 1-458-1458
Intl	**Sweden, Stockholm**	Sales Office, TEL: 08-235480
Intl	**Switzerland, Zurich**	Sales Office, TEL: 1-740-2220
Intl	**Taiwan, Taipei**	Sales Office, TEL: 02-521-9321
Intl	**United Kingdom, England**	Sales Office, TEL: 061 442-7162

Distributors

AL	**Huntsville**	Arrow, 205-882-2730
AL	**Huntsville**	Kierulff, 205-883-6070
AL	**Huntsville**	Marshall, 205-881-9235
AZ	**Phoenix**	Arrow Elctrns., 602-968-4800
AZ	**Phoenix**	Kierulff Elctrns, 602-243-4101
AZ	**Phoenix**	Marshall Inds., 602-968-6181
AZ	**Phoenix**	Wyle Labs, 602-249-2232
CA	**Anaheim**	R.V. Weatherford, 714-634-9600
CA	**Canoga Park**	Marshall Inds., 213-999-5001
CA	**El Monte**	Marshall Inds., 213-442-7204

DIPLOMAT

Call Diplomat First For

TEXAS INSTRUMENTS

- San Francisco, CA (408) 734-1900
- Los Angeles, CA (818) 700-8700
- Orange County, CA (714) 549-8401
- San Diego, CA (619) 292-5693
- Salt Lake City, UT (801) 486-4134
- Minneapolis, MN (612) 559-2500
- Denver, CO (303) 422-9229
- Austin, TX (512) 452-5254
- Dallas, TX (214) 980-1888
- Houston, TX (713) 496-4000
- Chicago, IL (312) 595-1000
- Boston, MA (617) 935-6611
- Danbury, CT (203) 797-9674
- Melville, NY (516) 454-6400
- Syracuse, NY (315) 652-5000
- Cherry Hill, NJ (609) 751-0440
- Totowa, NJ (201) 785-1830
- Philadelphia, PA (215) 546-3730
- Columbia, MD (301) 995-1226
- Atlanta, GA (404) 449-4133
- Clearwater, FL (813) 443-4514
- Fort Lauderdale, FL (305) 974-8700

DIPLOMAT ELECTRONICS CORPORATION

CA	**El Segundo**	Wyle Labs, 213-322-8100
CA	**Glendale**	R.V. Weatherford, 213-849-3451
CA	**Irvine**	Marshall Inds., 714-556-6400
CA	**Irvine**	Wyle Labs, 714-641-1600
CA	**Los Angeles**	Arrow Electronics, 213-701-7500
CA	**Los Angeles**	Kierulff Elctrns., 213-725-0325
CA	**Orange County**	Arrow Electronics, 714-851-8961
CA	**Palo Alto**	Kierulff Elctrns., 415-968-6292
CA	**Pomona**	R.V. Weatherford, 714-623-1261
CA	**San Diego**	Arrow Elctrns., 619-565-4800
CA	**San Diego**	Kierulff Elctrns., 619-278-2112
CA	**San Diego**	Marshall Inds., 619-578-9600
CA	**San Diego**	R. V. Weatherford, 619-695-1700
CA	**San Diego**	Wyle Labs, 619-565-9171
CA	**Santa Barbara**	R.V. Weatherford, 805-965-8551
CA	**Santa Clara**	Wyle Labs, 408-727-2500
CA	**Sunnyvale**	Arrow Elctrns., 408-745-6600
CA	**Sunnyvale**	Marshall Inds., 408-732-1100
CA	**Tustin**	Kierulff Elctrns., 714-731-5711
CO	**Denver**	Arrow Elctrns., 303-696-1111
CO	**Denver**	Kierulff Elctrns., 303-790-4444
CO	**Thornton**	Wyle Labs, 303-457-9953
CT	**Danbury**	Diplomat, 203-797-9674
CT	**Orange**	Milgray/Ct., 203-795-0714
CT	**Wallingford**	Arrow Elctrns., 203-265-7741
CT	**Wallingford**	Kierulff, 203-265-1115
CT	**Wallingford**	Marshall Elctrns., 203-265-3822
FL	**Ft. Lauderdale**	Arrow Elctrns., 305-776-7790
FL	**Ft. Lauderdale**	Diplomat, 305-974-8700
FL	**Ft. Lauderdale**	Kierulff, 305-486-4004
FL	**Orlando**	Arrow Elctrns., 305-725-1480
FL	**Orlando**	Milgray Elctrns., 305-647-5747
FL	**Tampa**	Diplomat/Southland, 813-443-4514
FL	**Tampa**	Kierulff Elctrns., 813-576-1966
GA	**Norcross**	Arrow Elctrns., 404-449-8252
GA	**Norcross**	Kierulff, 404-447-5252
GA	**Norcross**	Marshall Elctrns., 404-923-5750
IL	**Bensenville**	Hall-Mark/Chicago, 312-860-3800
IL	**Chicago**	Diplomat, 312-595-1000
IL	**Chicago**	Newark Elctrns., 312-638-4411
IL	**Elk Grove Village**	Kierulff Elctrns., 312-640-0200
IL	**Schaumburg**	Arrow Elctrns., 312-397-3440
IN	**Ft. Wayne**	Graham Elctrns., 219-423-3422
IN	**Indianapolis**	Arrow Electronics, 317-243-9353
IN	**Indianapolis**	Graham Elctrns., 317-634-8202
IA	**Cedar Rapids**	Arrow Electronics, 319-395-7230
KS	**Kansas City**	Hall-Mark, 913-888-4747
KS	**Lenexa**	Marshall, 913-492-3121
KS	**Wichita**	LComp Inc., 316-265-9507
MD	**Baltimore**	Arrow Elctrns., 301-247-5200
MD	**Baltimore**	Kierulff, 301-636-5800
MD	**Columbia**	Diplomat, 301-995-1226
MD	**Rockville**	Milgray, 301-468-6400
MA	**Billerica**	Kierulff Elctrns., 617-667-8331
MA	**Burlington**	Marshall Elctrns., 617-272-8200
MA	**Woburn**	Arrow Elctrns., 617-933-8130
MA	**Woburn**	Diplomat, 617-935-6611
MA	**Woburn**	Time Elctrns., 617-935-8080
MI	**Detroit**	Arrow Elctrns., 313-971-8220
MI	**Detroit**	Marshall, 313-525-5850

Texas Instruments, Inc. (Cont)

MI	**Detroit**	Newark Elctrns., 313-967-0600
MI	**Grand Rapids**	Arrow Electronics, 616-243-0912
MN	Edina	Hallmark, 612-854-3223
MN	Edina	Kierulff, 612-941-7500
MN	Plymouth	Marshall, 612-559-2211
MN	**Edina**	Arrow Elctrns., 612-830-1800
MO	**Earth City**	Hall-Mark, 314-291-5350
MO	**Kansas City**	LComp Inc., 816-221-2400
MO	**St. Louis**	Arrow Electronics, 314-567-6888
MO	**St. Louis**	Kierulff, 314-739-0855
NH	**Manchester**	Arrow Elctrns., 603-668-6968
NJ	**Camden**	General Radio Supp., 609-964-8560
NJ	**Clifton**	Marshall Elctrns., 201-882-0320
NJ	**Fairfield**	Kierulff Elctrns., 201-575-6750
NJ	**Marlton**	Milgray, 609-983-5010, 800-645-3956
NJ	**Moorestown**	Arrow Elctrns., 609-596-8000
NJ	**Moorestown**	Diplomat, 201-785-1830
NJ	**Saddle Brook**	Arrow Elctrns., 201-575-5300
NM	**Albuquerque**	Arrow Elctrns., 505-243-4566
NM	**Albuquerque**	Int'l. Elctrns., 505-345-8127
NY	Hauppauge	Marshall, 516-273-2424
NY	Endwell	Marshall Elctrns., 607-754-1570
NY	Farmingdale	Milgray, 516-420-9800
NY	**Endwell**	Marshall Elctrns., 607-754-1570
NY	**Freeport**	Milgray Elctrns., 516-546-5600, 800-645-3986
NY	**Hauppauge**	Arrow Elctrns., 516-231-1000
NY	**Hauppauge**	JACO, 516-273-5500
NY	**Liverpool**	Diplomat, 315-652-5000
NY	**Melville**	Diplomat, 516-454-6400
NY	**Rochester**	Arrow Electronics, 716-275-0300
NY	**Rochester**	Marshall Elctrns., 716-235-7620
NY	**Rochester**	Rochester Radio Supply, 716-454-7800
NY	**Syracuse**	Arrow, 315-652-1000
NC	**Greensboro**	Kierulff, 919-872-8410
NC	**Winston-Salem**	Arrow Elctrns., 919-876-3132
OH	**Cincinnati**	Graham, 513-772-1661
OH	**Cincinnati**	Hall-Mark, 513-563-5980
OH	**Cleveland**	Arrow, 216-248-3990
OH	**Cleveland**	Hall-Mark, 216-349-4632
OH	**Cleveland**	Kierulff, 216-587-6558
OH	**Cleveland**	Marshall, 216-248-1788
OH	**Columbus**	Graham, 614-895-1590
OH	**Columbus**	Hall-Mark/Ohio, 614-891-4555
OH	**Dayton**	Arrow Elctrns., 513-435-5563
OH	**Dayton**	ESCO Elctrns., 513-226-1133
OH	**Dayton**	Kierulff, 513-439-0045
OH	**Dayton**	Marshall Inds., 513-236-8088
OK	**Tulsa**	Arrow Electronics, 918-665-7700
OK	**Tulsa**	Hall-Mark, 918-665-3200
OK	**Tulsa**	Kierulff, 918-252-7537
OR		Arrow, 503-684-7690
OR	**Beaverton**	Kierulff, 503-641-9150
OR	**Hillsboro**	Wyle Labs, 503-640-6000
PA	**Ft. Washington**	Arrow Electronics, 215-928-1800
PA	**Ft. Washington**	General Radio, 215-922-7037
PA	**Pittsburgh**	Arrow Elctrns., 412-856-7000
TX	**Austin**	Arrow, 512-835-4180
TX	**Austin**	Comp. Specialties, 512-837-8922
TX	**Austin**	Hall-Mark, 512-258-8848
TX	**Austin**	Kierulff, 512-835-2090
TX	**Dallas**	Arrow, 214-386-7500
TX	**Dallas**	Hall-Mark, 214-341-1147
TX	**Dallas**	Int'l Elctrns., 214-233-9323
TX	**Dallas**	Kierulff, 214-343-2400
TX	**Dallas**	Marshall, 214-233-5200
TX	**Dallas**	Wyle, 214-235-9953
TX	**El Paso**	Int'l Elctrns., 915-598-3406
TX	**Houston**	Arrow, 713-530-4700
TX	**Houston**	Hall-Mark, 713-781-6100
TX	**Houston**	Harrison Equip., 713-879-2600
TX	**Houston**	Kierulff, 713-530-7030
TX	**Houston**	Marshall, 713-789-6600
UT	**Salt Lake City**	Diplomat, 801-486-4134
UT	**Salt Lake City**	Kierulff Elctrns., 801-973-6913
UT	**Salt Lake City**	Wyle Labs, 801-974-9953
VA	**Richmond**	Arrow, 804-282-0413
WA	**Bellevue**	Arrow Elctrns., 206-643-4800
WA	**Bellevue**	Wyle Labs, 206-453-8300
WA	**Seattle**	Kierulff Elctrns., 206-575-4420
WI	**Oak Creek**	Arrow Elctrns., 414-764-6600
WI	**Oak Creek**	Hall-Mark, 414-761-3000
WI	**Waukesha**	Kierulff Elctrns., 414-784-8160
Can	**Calgary**	Future, 403-259-6408
Can	**Calgary, Alberta**	Varah, 403-230-1235
Can	**Edmonton**	Future, 403-486-0974
Can	**Hamilton, Ontario**	Varah, 416-561-9311
Can	**Montreal, Quebec**	CESCO Elctrns., 514-735-5511
Can	**Montreal, Quebec**	Future Elctrns., 514-694-7710
Can	**Nepean, Ontario**	ITT Components, 613-226-7406
Can	**Ottawa, Ontario**	CESCO Elctrns., 613-226-6903
Can	**Ottawa, Ontario**	Future Elctrns., 613-820-8313
Can	**Quebec City**	ITT Components, 514-735-1177
Can	**Quebec City, Quebec**	CESCO Elctrns., 418-687-4231
Can	**Toronto**	ITT Components, 416-630-7971
Can	**Toronto, Ontario**	CESCO Elctrns., 416-661-0220
Can	**Toronto, Ontario**	Future Elctrns., 416-663-5563
Can	**Vancouver**	ITT Components, 604-270-7805
Can	**Vancouver, British Columbia**	Future Elctrns., 604-438-5545
Can	**Vancouver, British Columbia**	Varah, 604-873-3211
Can	**Winnipeg, Manitoba**	Varah, 204-633-6190

Third Domain, Inc.

Third Domain, Inc.
P. O. Box 35400
Tucson, Arizona 85740
602-299-8500

Thomson-CSF Components

Thomson-CSF Components Corporation
Semiconductor Division
6660 Variel Avenue
Canoga Park, California 91303
213-887-1010
TELEX: 69-8481
TWX: 910-494-1954

Sales Office & Representatives

AL	**Huntsville**	Dimark Inc., 205-852-5346
AZ	**Phoenix**	Sanford Sales Assocs., 602-957-3570
CA	**Canoga Park**	Thomson-CSF Components Corporation West, 818-887-1010
CA	**Glendale**	Orion Sales, 213-240-3151
CA	**Los Altos**	ELREPCO, 415-941-4990
CA	**San Diego**	Littlefield & Smith, 714-455-0055
CA	**Tustin**	Orion Sales, 714-832-9687
CT	**Canaan**	Conti-Younger Assocs., 203-824-5982

Thomson-CSF Components (Cont)

FL	**Clearwater**	Delmac Sales, 813-447-5192
FL	**Orlando**	Delmac Sales, 305-898-4688
FL	**Tamarac**	Delmac Sales, 305-726-1330
IL	**Franklin Park**	Dekotech, Inc., 312-455-5100
IL	**Schaumberg**	Thompson Semiconductors, 312-397-6550
IN	**Greenwood**	Valentine & Assocs., 317-888-2260
IN	**South Bend**	Valentine & Assocs., 219-291-3863
IA	**Cedar Rapids**	S & O Sales Co., 319-393-1845
KS	**Overland Park**	Advanced Tech. Sales, 913-492-4333
MA	**Burlington**	Conti-Younger Assocs., 617-273-1582
MI	**Bloomfield Hills**	ENCO Mktg., 313-642-0203
MN	**Minneapolis**	Comtek, Inc., 612-888-7011
MO	**Clayton**	Advanced Tech. Sales, 314-721-4401
NY	**Buffalo**	Quality Comps., Inc., 716-839-4170
NY	**Hempstead**	Kahgan Sales Corp., 516-538-2300
NY	**Manlius**	Quality Comps., Inc., 315-682-8885
OH	**Rocky River**	Norm Case Assocs., 216-333-0400
OK	**Tulsa**	Design Mktg., Inc., 918-628-1248
OR	**Beaverton**	E. S. Chase, 503-641-4111
PA	**Montgomeryville**	Thompson Semiconductors, 215-362-8500
PA	**Narberth**	Bresson Assocs., 215-664-6460
TX	**Bedford**	Design Mktg., Inc., 817-498-6130
TX	**Dallas**	Thompson Semiconductors, 214-991-7941
TX	**Richardson**	Design Mktg., Inc., 214-495-8855
WA	**Bellevue**	E. S. Chase, 206-453-0765
Can	**Islington, Ontario**	Pipe-Thompson LTD., 416-236-2355
Can	**Montreal, Quebec**	Thomson-CSF Canada Ltd., 514-286-7193
Intl	**Austria, Wien**	Thomson-CSF Elektronische Anlagen GmbH, TEL: (222) 94 62 82
Intl	**Belgium, Bruxelles**	Thomson S.A.-N.V., TEL: (2) 648.64.85
Intl	**Brazil, Sao Paulo**	Thomson-CSF Componentes do Brasil, TEL: (55 11) 542.47.42
Intl	**Denmark, Copenhagen**	Scan Supply, TEL: (01) 83.50.90
Intl	**Finland, Helsinki**	A Laikko Oy, TEL: (0) 75.04.14
Intl	**France, Velizy-Villacoublay**	Thomson Semiconducteurs, TEL: (3) 946.97.19
Intl	**Italy, Milano**	Thomson-CSF Componenti, TEL: (2) 699.41
Intl	**Italy, Roma**	Thomson-CSF Componenti, TEL: (6) 31.92.42.34
Intl	**Japan, Tokio**	Thomson-CSF Japan K.K., TEL: (3) 264.63.46
Intl	**Kowloon, Hong Kong**	Thomson-CSF Far East Ltd., TEL: (3) 721.96.82
Intl	**Netherlands, Gravenmoer**	Thomson S.A.-N.V., TEL: (16) 231.76.00
Intl	**Norway, Oslo**	Tahonic A/S, TEL: (02) 16.16.10
Intl	**Singapore**	Thomson-CSF Components SEA, TEL: (65) 295.31.24
Intl	**Spain, E. Barcelona**	Thomson-CSF Componentes y Tubos, TEL: (3) 373.30.11
Intl	**Spain, Madrid**	Thomson-CSF Componentes y Tubos, TEL: 405.16.15
Intl	**Sweden, Stockholm**	Thomson-CSF Komponenter & Elektronror AB, TEL: (08) 63.50.60
Intl	**Switzerland, Liebefeld Bern**	Modulator S.A., TEL: (31) 59.22.22.
Intl	**United Kingdom and Ireland, Basingstoke, Hants**	Thomson-CSF Components and Materials Ltd., TEL: (256) 29.155
Intl	**West Germany, Munchen**	Thomson-CSF Bauelemente GmbH, TEL: (089) 7879 0

Distributors

AL	**Huntsville**	R M Elctrns., 205-852-1550
AZ	**Phoenix**	Arizona Comps., 602-279-9446
AZ	**Tempe**	Anthem Elctrns., 602-244-0900
CA	**Anaheim**	Zeus, Inc., 213-924-0454
CA	**City of Industry**	Ital Sales, 213-968-8515
CA	**Covina**	ACI Elctrns., 213-331-0735
CA	**Lakeside**	Mouser Elctrns., 714-449-2220
CA	**San Diego**	Anthem Elctrns., 714-279-5200
CA	**San Jose**	Anthem Elctrns., 408-946-8000
CA	**Santa Ana**	Pacesetter Elctrns., 213-299-7760
CA	**Sunnyvale**	Pacesetter Elctrns., 408-734-5470
CA	**Tustin**	Anthem Elctrns., 213-582-2122
FL	**Ft. Lauderdale**	DIELCO, 305-973-8700
FL	**Ft. Lauderdale**	Natl. Resistor Corp., 305-772-4500
IL	**Chicago**	Nep Elctrns., Inc., 312-625-8400
IL	**Lombard**	R M Elctrns., 312-932-5150
IL	**Northbrook**	Rayal Elctrns., 312-498-0935
IN	**Indianapolis**	R M Elctrns., 317-247-9701
KS	**Lenexa**	Comp. Specialties, 913-492-3555
MA	**Newton**	Greene-Shaw Co., 617-969-8900
MA	**Waltham**	Nova Elctrns., 617-489-3300
MI	**Farmington Hills**	Ambur Elctrns., 313-477-8670
MI	**Wyoming**	R M Elctrns., 616-531-9300
MN	**Minneapolis**	Joel Co., 612-545-5669
MO	**St. Charles**	Finnigan Elctrns., 314-946-6201
NJ	**Bloomfield**	Solid State Inc., 201-429-8700
NJ	**Camden**	General Radio, 609-964-8560
NM	**Albuquerque**	International Elctrns., 505-345-8127
NY	**Elmsford**	Zeus, Inc., 914-592-4120
NY	**Plainview**	A.C.I. Elctrns., 516-293-6630
NY	**Plainview**	Trace Elctrns., 516-249-4455
NC	**Charlotte**	Dixie Elctrns., 704-377-5413
OH	**Cleveland**	CAM/RPC, 216-461-4700
OK	**Tulsa**	Comp. Specialties, 918-664-2820
OK	**Tulsa**	Quality Comps., 918-664-8812
PA	**Pittsburgh**	CAM/RPC, 412-782-3770
PA	**York**	E.C.I., 717-843-8971
RI	**Warwick**	Edwards Elctrns., 401-781-8000
SC	**Columbia**	Dixie Elctrns., 803-779-5332
SC	**Greenville**	Dixie Elctrns., 803-271-2520
TN	**Gray**	Dixie Elctrns., 615-477-3838
TX	**Austin**	Comp. Specialties, 512-837-8922
TX	**Austin**	Quality Comps., 512-835-0220
TX	**Dallas**	Comp. Specialties, 214-357-6511
TX	**Dallas**	Quality Comps., 214-387-4949
TX	**Dallas**	R M Elctrns., 214-263-8361
TX	**El Paso**	International Elctrns., 915-778-9761
TX	**Houston**	Comp. Specialties, 713-771-7237
TX	**Houston**	Quality Comps., 713-772-7100
WA	**Kent**	Shannon LTD., 206-763-0545
WI	**New Berlin**	R M Elctrns., 414-784-4420
Can	**Montreal, Quebec**	Future Elctrns., 514-735-5775
Can	**Willowdale, Ontario**	Electrosonic, Inc., 416-494-1666

Toko America

Toko America Inc.
5520 West Touhy Avenue
Skokie, Illinois 60077
312-677-3640

Torric

Torric Corporation
7950 Redfield Road
Scottsdale, Arizona 85260
602-951-2900
TELEX: 759-582 Torric Scot U.D.

Toshiba

Toshiba America, Inc.
2692 Dow Av.
Tustin, California 92680
714-832-6300
TELEX: 314-138

Toshiba (Cont)

Specific product information:
Memory, Microcomputer and Logic Ics: 714-832-6300
LCD's and Gunn Diodes: T.L.C., Chicago, Illinois 312-945-1500

Sales Office & Representatives

CA **Fountain Valley**
Bager Elctrns., Inc., 714-957-3367
CA **Los Altos**
Elrepco, Inc., 415-962-0660
CA **Newport Beach**
Toshiba America, Inc., 714-752-0373
CA **San Jose**
Toshiba Northwest, 408-244-4070
CA **Tustin**
Toshiba America, 714-752-0373
FL **Boca Raton**
Toshiba American, 305-394-3004
GA **Atlanta**
Toshiba Southeastern Region, 404-493-4401
IL **Deerfield**
Toshiba Central Area, 312-945-1500
IN **Indianapolis**
Leslie M. DeVoe Co., 317-842-3245
IA **Cedar Rapids**
C. H. Horn, 319-393-8703
MD **Timonium**
Glen White Assocs., 301-252-6360
MA **Burlington**
Toshiba Eastern Area, 617-272-4352
MA **Waltham**
Datcom, Inc., 617-891-4600
NY **Poughkeepsie**
Toshiba America, 914-462-5710
NY **Syracuse**
Pl-tronics, 315-455-7346
OH **Cleveland**
Steffen & Assoc., 216-461-8333
OH **Dayton**
Steffen & Assoc., 513-293-3145
OH **Lexington**
Steffen & Assoc., 419-884-2313
OR **Tigard**
Components West, 503-684-1671
TX **Austin**
T.S.C., 512-346-9940
TX **Dallas**
Technology Sales Co., 214-380-0200
TX **Houston**
T.S.C., 713-266-2473
TX **Richardson**
Toshiba, South Central Region, 214-480-0470
VA **Charlottesville**
Glen White Assocs., 804-295-0435
VA **Colonial Beach**
Glen White Assocs., 804-224-7764, 0404
VA **Lynchburg**
Glen White Assocs., 804-384-0173
WA **Redmond**
Components West, 206-885-5880

Distributors

AZ **Scottsdale**
Western Microtechnology, 602-948-4240
CA **Chatsworth**
Intergrated Elctrns., 818-998-2200
CA **Cupertino**
Western Microtechnology, 408-725-1660
CA **Irvine**
Intergrated Elctrns., 714-837-9960
CA **San Diego**
Ryno Elctrns., 714-261-2500
CA **San Jose**
Intergrated Elctrns., 408-263-1100
CA **Tustin**
Image Elctrns., 714-730-0303
CT **Wallingford**
Cronin Elctrns., Inc., 203-265-3134
FL **Winter Park**
Milgray, 305-647-5747, 800-327-5262
GA **Atlanta**
Milgray Elctrns., 404-393-9666
IL **Elk Grove Village**
GBL Gould Elctrns., 312-593-3220
KS **Overland Park**
Milgray, 913-236-8800
MA **Burlington**
Milgray New England, 617-272-6800
MA **Needham Heights**
Cronin Elctrns., Inc., 617-449-0500
MI **Farmington Hills**
Prehler Elctrns., 313-473-7200
MO **Kansas City**
L Comp, 816-221-2400
MO **Rockville**
Milgray/Washington, 301-468-6400, 800-638-6656
NJ **Berlin**
General Components, 609-768-6767
NJ **Marlton**
Milgray Delaware Valley, 609-983-5010, 800-257-7808
NY **Farmingdale**
Milgray Elctrns., 516-420-9800
NY **Pittsford**
Milgray Upstate NY, 716-385-9330
NY **Rome**
Rome Elctrns., 315-337-5400
Can **Ottawa, Ontario**
Carsten Elctrns., Ltd., 613-729-4138
Can **Scarborough, Ontario**
Carsten Elctrns., Ltd., 416-751-2371
Can **St. Laurent, Quebec**
Carsten Elctrns., Ltd., 514-334-8321

Triquint Semiconductor

Triquint Semiconductor
P. O. Box 4935, Group 700
Beaverton, Oregon 97075
503-629-4227
TELEX: 4742021

TRW

TRW-LSI Products Division
Electronic Components Group
P.O. Box 2472
La Jolla, California 92038
619-457-1000
TELEX: 697-957
TWX: 910-355-1571
All other information:
TRW Semiconductors
14520 Aviation Blvd.
Lawndale, California 90260
(213) 679-4561

Sales Office & Representatives

Intl **Australia, Victoria**
Total Electronics, TEL: 03-679306
Intl **Brazil, Sao Paulo**
TRW Miabras, S.A., TEL: 2409211
Intl **Denmark, Herlev**
A/S Nordisk Elektronik, TEL: (02) 842000
Intl **England, Bedford**
TRW ECG, TEL: (0234) 217711, 44-234-217711
Intl **Finland, Helsinki**
OY Fintronic AB, TEL: (90) 692-6022
Intl **France, Malmaison**
TRW Componants Electronics, TEL: (01) 7510806, 33-1-7510806
Intl **Germany, Muenchen**
TRW Elek Bauelemente Vertriebs GmbH, TEL: (089) 7103-0
Intl **Hong Kong, Kowloon**
Tektron Electronics, TEL: 852-3-856-1-99
Intl **Hong Kong, Singapore**
Seamax Engineering Private Ltd., TEL: 65-747-6155
Intl **Italy, Monza**
Exhibo S.R.L., TEL: (039) 360021
Intl **Japan, Tokyo**
Nihon Teksel Co. Ltd., TEL: 03-461-5121
Intl **Japan, Tokyo**
T.R.W. Overseas Inc., TEL: (03) 434-0881
Intl **Korea, Seoul**
Tess Ko, TEL: 82-2-754-2454
Intl **Netherlands, Den Haag**
Koning En Hartman Elek B.V., TEL: (015) 609906
Intl **New Zealand, Porirua**
AWA, TEL: 644375069
Intl **Norway, Hvalstad**
Nordisk Elektronik Norge A/S, TEL: (02) 846210
Intl **Spain, Madrid**
Unitronics S.A., TEL: (1) 2425204
Intl **Sweden, Solna**
Nordisk Elektronik AB, TEL: (08) 4687349770
Intl **Switzerland, Zurich**
Baerlocher AG, TEL: (01) 429900
Intl **Taiwan, Taipei**
Sea Union Eng., TEL: 751-2062
Intl **United Kingdom, Cambridge**
MCP Electronics, Ltd., TEL: (0223) 213333

Unicorn Microelectronics

Unicorn Microelectronics
3690A North First St.
San Jose, California 95134
408-946-4343
TWX: 510-600-2732
Specific product information:
Dar-Sun Tsien, Ph.D--Julie Gardner

UMC

United Microelectronics Corp.
3054 Scott Blvd.
Santa Clara, California 95054
408-970-0465
408-727-9239
TELEX: FAX: 408-970-0548

United Technologies

United Technologies Microelectronics Center
1575 Garden of the Gods Road
Colorado Springs, Colorado 80907
303-594-8000
Specific product information:
John Schaefer
Application engineering:
John Kemps
Literature:
Customer Service
Price and delivery:
Stu Sands
Place an order:
Contact local rep
Follow-up an order:
Customer Service

Unitrode

Unitrode Corporation
5 Forbes Road
Lexington, Massachusetts 02173
617-861-6540
TELEX: 95-1064
TWX: 710-326-6509

Sales Office & Representatives

AZ	**Phoenix**	Compass Mktg. & Sales, Inc., 602-996-0635
AZ	**Tucson**	Compass Marketing & Sales, 602-293-1220
CA	**Irvine**	Centaur Corp., 714-261-2123
CA	**San Diego**	Centaur Corp., 619-278-4950
CA	**Santa Clara**	I½32 Inc., 408-988-3400
CA	**Woodland Hills**	Centaur Corp., 818-704-1655
CO	**Denver**	Component Sales, Inc., 303-779-8060
CT	**Brookfield**	Kanan Assocs., 203-775-0494
FL	**Clearwater**	Delmac Sales, 813-447-5192
FL	**Ft. Lauderdale**	Delmac Sales, 305-739-0016
FL	**Orlando**	Delmac Sales, 305-898-4688
FL	**Palm Bay**	Delmac Sales, 305-724-8377
IL	**Elk Grove Village**	Oasis Sales Corp., 312-640-1850
IN	**Carmel**	Shamrock Assoc., 317-848-5265
IA	**Davenport**	Rush & West Assoc., 319-326-3091
KS	**Olathe**	Rush & West Assocs., 913-764-2700
MD	**Severna Park**	New Era Sales, Inc., 301-544-4100
MA	**Maynard**	Byrne Assocs., 617-897-3131
MA	**Needham**	Kanan Assocs., 617-449-7400
MI	**Grand Rapids**	Miltimore Sales, Inc., 616-942-9721
MI	**Novi**	Miltimore Sales, Inc., 313-349-0260
MN	**Eden Prairie**	Aldridge Assoc., 612-944-8433
MO	**Ballwin**	Rush & West Assocs., 314-394-7271
NJ	**Cedar Knolls**	T.A.M., Inc., 201-285-9094
NM	**Albuquerque**	Compass Mktg. & Sales, Inc., 505-888-0800
NY	**Albany**	Reagan/Compar Albany, Inc., 518-489-7408
NY	**Endwell**	Reagan/Compar Albany, Inc., 607-754-8946, 607-723-8743
NY	**Fairport**	Reagan/Compar Albany, Inc., 716-271-2230
NY	**New Hartford**	Reagan/Compar Albany, Inc., 315-732-3775
NY	**S. Hauppauge**	T.A.M., Inc., 516-348-0800
NC	**Raleigh**	J & B Sales, 919-878-8600
OH	**Beachwood**	Thompson and Associates, 216-831-6277
OH	**Columbus**	Thompson and Associates, 614-272-2086
OH	**Dayton**	Thompson and Associates, 513-435-7733
OR	**Portland**	Jas. J. Backer Co., 503-297-8744
PA	**Erdenheim**	Omni Sales, 215-233-4600
PA	**Mars**	Thompson and Associates, 412-776-6495
TX	**Austin**	Sundance Sales, Inc., 512-339-6611
TX	**Dallas**	Sundance Sales, Inc., 214-867-0592
UT	**Salt Lake City**	Components Sales, Inc., 801-268-8440
WA	**Seattle**	Jas. J. Backer Co., 206-285-1300
WI	**Brookfield**	Oasis Sales Corp., 414-782-6660
Can	**Concord, Ontario**	Kaytronics Ltd., 416-669-2262
Can	**Kanata, Ontario**	Kaytronics Ltd., 613-592-6606
Can	**Quebec**	Kaytronics Ltd., 514-367-0101
Can	**Surrey, British Columbia**	Kaytronics Ltd., 604-581-5005
Intl	**Australia, Crows Nest**	VSI Electronics, TEL: 439-4655
Intl	**Austria, Graz**	Dahms Elektronik, TEL: (0316) 64.0.30
Intl	**Belgium, Wemmel**	J.P. Lemaire, TEL: 478-73-08
Intl	**Brazil, Sao Paulo**	Hi Tech Comercial & Industrial Ltda., TEL: (011) 533-9566
Intl	**Denmark, Glostrup**	Ditz Schweitzer A/S, TEL: 2-45 30 44
Intl	**Finland, Helsinki**	Turion Oy, TEL: 3580-372144
Intl	**Germany, Berlin**	Frehsdorf GmbH, TEL: 030-8839040
Intl	**Germany, Burgwedel**	EBV Elektronik GmbH, TEL: 05139/5038
Intl	**Germany, Dortmund**	Metronik GmbH, TEL: 0231/423037-38
Intl	**Germany, Dusseldorf**	EBV Elektronik GmbH, TEL: 0211-84-84-6/7
Intl	**Germany, Frankfurt/Main**	EBV Elektronik GmbH, TEL: 069 785037
Intl	**Germany, Quickborn**	Frehsdorf GmbH, TEL: 04106-71058
Intl	**Germany, Rosenheim**	Frehsdorf GmbH, TEL: 08031/37085-86
Intl	**Germany, Unterhaching**	EBV Elektronik GmbH, TEL: (089) 611051
Intl	**Germany, Unterhaching**	Metronik GmbH, TEL: 089-6114063
Intl	**Hong Kong, Wanchai**	CET, Ltd., TEL: 5-200922
Intl	**India, Bombay**	Sujata Sales and Exports, TEL: 234658
Intl	**Ireland, Adare**	New England Technical Sales, TEL: 061-94301
Intl	**Ireland, Dublin**	New England Technical Sales, TEL: (01) 450-635
Intl	**Israel, Tel Aviv**	S.T.G. International, TEL: 03-248-231
Intl	**Italy, Biassono**	Dimac Elettronica S.R.L., TEL: (039) 491514
Intl	**Italy, Milano**	Unitrode S.R.L., TEL: 431-831, 434-604
Intl	**Italy, Roma Eur**	C.F. SNC, TEL: (6) 541-0947
Intl	**Japan, Tokyo**	Rikei Corporation, TEL: (03) 345-1411
Intl	**Korea, Gwanak-Ku**	Duksung Trading, TEL: 854-5047
Intl	**Netherlands, Ap Delft**	Koning en Hartman, TEL: 15609906
Intl	**New Zealand, Auckland**	Professional Electronics, TEL: 493-029, 499-048
Intl	**Norway, Jerikoveien**	Neco A/S, TEL: 30 12 30
Intl	**Singapore**	Desner Electronic PTE, Ltd., TEL: 337-3188
Intl	**South Africa, Capetown**	Electrolink, TEL: 215350
Intl	**Spain, Barcelona**	Monolithic, TEL: (3) 347-4155
Intl	**Sweden, Solna**	AB Betoma, TEL: 08-820280
Intl	**Switzerland, Buenzen**	Elkom AG, TEL: 57-462191
Intl	**Taiwan, Taipei**	Holy Stone Enterprise, TEL: 341-2493
Intl	**United Kingdom, Blackheath London**	Unitrode Sales Office, TEL: 01-318-1431/4
Intl	**United Kingdom, Kent**	Candy Electronic Components, TEL: 0622-70774/5

Distributors

AL	**Huntsville**	Arrow Electronics, 205-882-2730
AL	**Huntsville**	Hall-Mark, 205-837-8700
AL	**Huntsville**	Hamilton/Avnet, 205-837-7210
AZ	**Phoenix**	Arrow Electronics, 602-968-4800
AZ	**Phoenix**	Hallmark Electronics, 602-243-6601
AZ	**Phoenix**	Hamilton/Avnet, 602-231-5100
CA	**Anaheim**	Zeus Components, 714-632-6880
CA	**East Bay**	Arrow Electronics, 415-487-4600
CA	**Los Angeles**	Arrow Electronics, 818-701-7500
CA	**Los Angeles**	Avnet Electronics, 213-558-2345
CA	**Los Angeles**	Hamilton/Avnet Electronics, 213-558-2441
CA	**Orange County**	Arrow Electronics, 714-838-5422
CA	**Orange County**	Avnet Electronics, 714-754-6111
CA	**Orange County**	Hallmark Electronics, 714-669-4700
CA	**Orange County**	Hamilton Electro Sales, 714-641-4100
CA	**Sacramento**	Hallmark Electronics, 916-722-8600
CA	**Sacramento**	Hamilton/Avnet, 916-925-2216
CA	**San Diego**	Arrow Elctrns., Inc., 619-568-4800
CA	**San Diego**	Hallmark Electronics, 619-268-1201
CA	**San Diego**	Hamilton/Avnet, 619-571-7510
CA	**San Fernando Valley**	Avnet Electronics, 818-700-2600
CA	**San Fernando Valley**	Hallmark Electronics, 818-716-7300
CA	**San Fernando Valley**	Hamilton Electro Sales, 818-700-6500
CA	**San Francisco**	Arrow Electronics, 408-745-6600
CA	**San Francisco**	Hamilton/Avnet Electronics, 408-743-3355
CA	**San Gabriel**	Hamilton/Avnet Electronics, 714-989-4602
CA	**San Jose**	Hallmark Electronics, 408-773-9990
CA	**Santa Barbara**	Hallmark Electronics, 800-821-3441
CA	**Santa Clara**	Zeus Components, 408-727-0714

Unitrode (Cont)

CA	**Sunnyvale**	Capsco Sales, Inc., 408-734-3020
CA	**West Los Angeles**	Hallmark Electronics, 213-643-9101
CO	**Denver**	Arrow Elctrns., Inc., 303-696-1111
CO	**Denver**	Hallmark Electronics, 303-790-1662
CO	**Denver**	Hamilton/Avnet Electronics, 303-779-9998
CT	**Danbury**	Hamilton/Avnet, 203-797-2800
CT	**Wallingford**	Arrow Elctrns., Inc., 203-265-7741
CT	**Wallingford**	Hallmark Electronics, 203-269-0100
FL	**Clearwater**	Arrow Electronics, 813-576-8995
FL	**Ft. Lauderdale**	Arrow Elctrns., Inc., 305-429-8200
FL	**Ft. Lauderdale**	Hall-Mark, 305-971-9280
FL	**Melbourne**	Hamilton/Avnet Electronics, 305-725-2700
FL	**Miami**	Hamilton/Avnet, 305-971-2900
FL	**Orlando**	Hall-Mark, 305-855-4020
FL	**Orlando**	Hamilton/Avnet Electronics, 305-628-3888
FL	**Oviedo**	Zeus Components, 305-365-3000
FL	**Palm Bay**	Arrow Elctrns., Inc., 305-725-1480
FL	**St. Petersburg**	Hamilton/Avnet, 813-576-3930
FL	**Tampa/St. Petersburg**	Hallmark Electronics, 813-530-4543
GA	**Atlanta**	Arrow Elctrns., Inc., 404-449-8252
GA	**Atlanta**	Hall-Mark, 404-447-8000
GA	**Atlanta**	Hamilton/Avnet, 404-447-7507
IL	**Champaign/Urbana**	Hamilton/Avnet Electronics, 800-325-8654
IL	**Chicago**	Arrow Electronics, 312-397-3440
IL	**Chicago**	Hall-Mark, 312-860-3800
IL	**Chicago**	Hamilton/Avnet Electronics, 312-860-7700
IN	**Indianapolis**	Arrow Elctrns., Inc., 317-243-9353
IN	**Indianapolis**	Hamilton/Avnet, 317-844-9333
IA	**Cedar Rapids**	Arrow Electronics, 319-395-7230
IA	**Cedar Rapids**	Hamilton/Avnet Electronics, 319-362-4757
KS	**Kansas City**	Hall-Mark, 913-888-4747
KS	**Kansas City**	Hamilton/Avnet, 913-888-8900
KS	**Wichita**	Hamilton/Avnet Electronics, 800-532-6720
KY	**Lexington**	Hamilton/Avnet Electronics, 800-543-4783
KY	**Louisville**	Hamilton/Avnet Electronics, 800-428-6012
MD	**Baltimore**	Arrow Elctrns., Inc., 301-995-0003
MD	**Baltimore**	Hall Mark, 301-988-9800
MD	**Baltimore**	Hamilton/Avnet, 301-995-5000, 301-995-3500
MD	**Columbia**	Zeus Components, 301-997-1118
MA	**Boston**	Arrow Elctrns., Inc., 617-933-8130
MA	**Boston**	Hallmark Electronics, 617-935-9777
MA	**Boston**	Hamilton/Avnet Electronics, 617-273-7500
MA	**Burlington**	Zeus Components, 617-863-8800
MA	**Wilmington**	Lionex Corp., 617-272-9400
MI	**Detroit**	Arrow Electronics, 313-971-8220
MI	**Detroit**	Hamilton/Avnet, 313-522-4700
MI	**Grand Rapids**	Hamilton/Avnet, 616-243-0912
MI	**Grand Rapids**	Hamilton/Avnet, 616-243-8805
MN	**Minneapolis**	Arrow Elctrns., Inc., 612-830-1800
MN	**Minneapolis**	Hall-Mark, 612-854-3223
MN	**Minneapolis**	Hamilton/Avnet, 612-932-0600
MO	**St. Louis**	Arrow Elctrns., Inc., 314-567-6888
MO	**St. Louis**	Hall-Mark, 314-291-5350
MO	**St. Louis**	Hamilton/Avnet, 314-344-1200
NE	**Lincoln/Omaha**	Hamilton/Avnet Electronics, 800-255-6702
NH	**Manchester**	Arrow Elctrns., Inc., 603-668-6968
NH	**Manchester**	Hamilton/Avnet Electronics, 603-624-9400
NJ	**Cherry Hill**	Hallmark, 609-424-7300
NJ	**Cherry Hill**	Hamilton/Avnet, 609-424-0100
NJ	**Fairfield**	Arrow Elctrns., Inc., 201-575-5300
NJ	**Fairfield**	Hallmark Electronics, 201-575-4415
NJ	**Fairfield**	Hamilton/Avnet, 201-575-3390
NJ	**Fairfield**	Lionex Corp., 201-227-7960
NJ	**Marlton**	Arrow Electronics, 609-596-8000
NM	**Albuquerque**	Arrow Elctrns., Inc., 505-243-4566
NM	**Albuquerque**	Hamilton/Avnet, 505-765-1500
NY	**Farmingdale**	Arrow Electronics, 516-293-6363
NY	**Hauppauge**	Arrow Elctrns., Inc., 516-231-1000
NY	**Hauppauge**	Lionex Corp., 516-273-1660
NY	**Long Island**	Hamilton/Avnet, 516-231-9800
NY	**New York**	Hallmark Electronics, 516-737-0600
NY	**New York**	Hamilton/Avnet Electronics, 516-997-6868
NY	**Port Chester**	Zeus Components, 914-937-7400
NY	**Port Chester**	Zeus Components, 914-937-7400
NY	**Rochester**	Arrow Elctrns., Inc., 716-427-0300
NY	**Rochester**	Hamilton/Avnet, 716-475-9130
NY	**Syracuse**	Arrow Elctrns., Inc., 315-652-1000
NY	**Syracuse**	Hamilton/Avnet, 315-437-2641
NC	**Raleigh**	Arrow Electronics, 919-876-3132
NC	**Raleigh**	Hall-Mark, 919-872-0712
NC	**Raleigh**	Hamilton/Avnet, 919-878-0810
NC	**Winston-Salem**	Arrow Elctrns., Inc., 919-725-8711
OH	**Cincinnati**	Hall Mark, 800-282-3918
OH	**Cleveland**	Arrow Elctrns., Inc., 216-248-3990
OH	**Cleveland**	Hall-Mark, 216-349-4632
OH	**Cleveland**	Hamilton/Avnet, 216-831-3500
OH	**Columbus**	Arrow Electronics, 614-885-8362
OH	**Columbus**	Hall-Mark, 614-891-4555
OH	**Columbus**	Hamilton/Avnet Electronics, 614-882-7004
OH	**Dayton**	Arrow Elctrns., Inc., 513-435-5563
OH	**Dayton**	Hamilton/Avnet, 513-439-6700
OK	**Tulsa**	Arrow Electronics, 918-665-7700
OK	**Tulsa**	Hall-Mark, 918-665-3200
OR	**Portland**	Arrow Electronics, 503-684-1690
OR	**Portland**	Hamilton/Avnet, 503-635-8831
PA	**Horsham**	Lionex Corp., 215-443-5150
PA	**Philadelphia**	Arrow Electronics, 215-928-1800
PA	**Philadelphia**	Hallmark Electronics, 215-355-7300
PA	**Philadelphia**	Hamilton/Avnet Electronics, 215-831-1300
PA	**Pittsburgh**	Arrow Elctrns., Inc., 412-856-7000
PA	**Pittsburgh**	Hamilton/Avnet Electronics, 412-281-4150
RI	**E. Providence**	Arrow Electronics, 401-431-0980
SC	**Columbia**	Hamilton/Avnet Electronics, 800-334-1597
TX	**Austin**	Arrow Electronics, 512-835-4180
TX	**Austin**	Hall-Mark, 512-258-8848
TX	**Austin**	Hamilton/Avnet, 512-837-8911
TX	**Dallas**	Arrow Elctrns., Inc., 214-380-6464
TX	**Dallas**	Hall-Mark, 214-341-1147
TX	**Dallas**	Hamilton/Avnet, 214-659-4111
TX	**Dallas**	Zeus Components, 214-783-7010
TX	**Houston**	Arrow Elctrns., Inc., 713-530-4700
TX	**Houston**	Hall-Mark, 713-781-6100
TX	**Houston**	Hamilton/Avnet, 713-780-1771
TX	**Houston**	Lenert Co., Inc., 713-225-1465
UT	**Salt Lake City**	Arrow Electronics, 801-972-0404
UT	**Salt Lake City**	Hamilton/Avnet, 801-972-2800
VA	**Richmond**	Arrow Electronics, 804-282-0413
WA	**Seattle**	Arrow Elctrns., Inc., 206-643-4800
WA	**Seattle**	Hamilton/Avnet, 206-453-5844
WV	**Charleston**	Hamilton/Avnet Electronics, 800-543-4783
WV	**Huntington**	Hamilton/Avnet Electronics, 800-543-4783

Unitrode (Cont)

WI **Milwaukee**
Arrow Elctrns., Inc., 414-764-6600
WI **Milwaukee**
Hall-Mark, 414-761-3000
WI **Milwaukee**
Hamilton/Avnet, 414-784-4510
Can **Calgary**
Hamilton/Avnet, 403-230-3586
Can **Downsview, Ontario**
Future Elctrns., Inc., 416-663-5563
Can **Montreal, Quebec**
Hamilton/Avnet, 514-335-1000
Can **Ottawa**
Hamilton/Avnet Electronics, 613-226-1700
Can **Ottawa, Ontario**
Future Elctrns., Inc., 613-820-8313
Can **Pointe Claire, Quebec**
Future Elctrns., Inc., 514-694-7710
Can **Toronto, Ontario**
Hamilton/Avnet, 416-677-7432
Can **Vancouver**
Hamilton/Avnet Electronics, 604-437-6667
Can **Vancouver, British Columbia**
Future Elctrns., Inc., 604-438-5545
Intl **France, Antony Cedex**
C.C.I., TEL: (01) 666 21-82
Intl **France, Chassieu**
Spetelec, TEL: (7) 840-1006
Intl **France, Lyon**
C.C.I., TEL: (7) 874-4456
Intl **France, Rungis Cedex**
Spetelec, TEL: (1) 686.5665
Intl **France, Verrieres le Buisson Cedex**
Unitrode Sales Office, TEL: (6) 920.03.64
Intl **Germany, Heddesheim**
Metronik GmbH, TEL: 06203-4701
Intl **Germany, Nurnberg**
Metronik GmbH, TEL: 0911/423037/38
Intl **Germany, Stuttgart**
EBV Elektronik GmbH, TEL: 0711-24 74 81
Intl **Germany, Unterhaching**
Unitrode Sales Office, TEL: 089/6190 04/05/06
Intl **Italy, Milano**
Eurelettronica S.R.L., TEL: (02) 498-1851
Intl **Italy, Padova**
Fanton Electronic System S.R.L., TEL: 049-77-5822
Intl **Italy, Riale Di Zola Predosa**
Fanton Bologna S.R.L., TEL: (051) 75 1710
Intl **Italy, Settimo Milanese**
Fanton Milano, S.R.L., TEL: (02) 328-7312
Intl **Italy, Torino**
Fanton Torino S.R.L., TEL: (011) 309 7347
Intl **Sweden, Bromma**
Fertronic AB, TEL: 08252610
Intl **Switzerland, Buenzen**
Elkom AG, TEL: 57-462191
Intl **United Kingdom, Crewe**
Nortronic Associates, TEL: 0270 586161
Intl **United Kingdom, St. Mary Cray**
House of Power, TEL: 0689 71531/7
Intl **United Kingdom, Thames, Oxon**
Thame Comps. Ltd., TEL: 084-421-4561
PR **San Juan**
Arrow Electronics, 809-723-6500

Universal

Universal Semiconductor Inc.
1925 Zanker Road
San Jose, California 95112
408-279-2830
TWX: 910-338-7617
All other information:
Sales & Mktg. .... (408) 279-2830

Valid Logic Systems

Valid Logic Systems
2820 Orchard Parkway
San Jose, California 95134
408-945-9400

Valley Data Sciences

Valley Data Sciences
2426 Charleston Rd.
Mountain View, California 94043
415-968-2900

VAMP

VAMP
6753 Selma Ave.
Los Angeles, California 90028
213-466-5533

Vatic Systems Inc.

Vatic Systems Inc.
761 East University
Mesa, Arizona 85203
602-962-8998

Vectron Graphics Systems

Vectron Graphics Systems, Inc.
4401 Great America Pkwy.
Santa Clara, California 95054
408-980-1180
Specific product information:
Rick Smith

Versatec

Versatec--A Xerox Company
2710 Walsh Ave.
Santa Clara, California 95051
408-748-3103
408-988-2800
Specific product information:
Rod Murray

Versa Logic

Versatile Logic Systems Corp.
87070 Dukhobar Road
Eugene, Oregon 97402
503-485-8575
800-824-3163

Vesta Technology

Vesta Technology, Inc.
7100 W. 44th Ave., Suite 101
Wheat Ridge, Colorado 80033
303-422-8088

VIA System, Inc.

VIA System, Inc.
76 Treble Cove Rd.
North Billerica, Massachusetts 01862
617-667-8574

View Logic Systems

View Logic Systems
33 Boston Post Road, Ste. 300
Marlboro, Massachusetts 01752
617-480-0881

Visions Un-Limited

Visions Un-Limited
8460 Ridgewood Lane
Novelty, Ohio 44072-9611

Vitelic

Vitelic
3910 N. First
San Jose, California 95134
408-433-6000
Specific product information:
Jack Konrath

Vitesse

Vitesse Electronics Corp.
741 Calle Plano
Camarillo, California 93010
805-388-3700

VLSI Design Associates

VLSI Design Associates
910 Campisi Way
Campbell, California 95008
408-371-7400

VLSI Technology

VLSI Technology, Inc. (VTI)
1109 McKay Drive
San Jose, California 95131
408-942-1810
TELEX: 278-807
TELEX: 176-151

Sales Office & Representatives

AL **Huntsville**
Electronic Manufacturers' Agents, 205-830-4030, 800-633-2920
AZ **Scottsdale**
Elctrns. Tech. Sales, 602-941-9137
AZ **Scottsdale**
VLSI Technology, Inc., 602-951-3776
CA **Newport Beach**
Leading Concept Technologies, Inc., 714-851-0654
CA **San Diego**
Bestronics, Inc., 619-693-1111
CA **San Jose**
VLSI Sales Office, 408-943-0264
CA **Santa Ana**
VLSI Sales Office, 714-250-4900
CA **Santa Clara**
Emerging Technology, 408-727-1771
CO **Boulder**
Luscombe Eng. of Co., 303-772-3342
CT **Meriden**
New England Technical Sales Corp., 203-237-8827

VLSI Technology (Cont)

FL	**Fern Park** Sales Engineering Concepts, Inc., 305-781-4800
FL	**Lighthouse Point** Sales Engineering Concepts, Inc., 305-781-4800
FL	**Miami** VLSI Tech. Inc., 305-262-2002
FL	**Tampa** Sales Engineering Concepts, Inc., 305-781-4800
GA	**Norcross** VLSI Tech. Inc., 404-446-1326
GA	**Roswell** Electronic Maufacturers' Agents, 800-647-3773, 404-992-7240
IL	**Inverness** James Industries, 312-358-8500
IL	**Inverness** VLSI, 312-358-8000
IL	**Schaumburg** VLSI Technology, Inc., 312-310-9595
IN	**Indianapolis** SAI Marketing, 317-241-9276
MD	**Baltimore** Conroy Sales, 301-296-2444
MA	**Burlington** New England Technical Sales Corp., 617-272-0434
MA	**Wilmington** VLSI Sales Office, 617-658-9501/9502
MI	**Brighton** SAI Marketing, 313-227-1786
MN	**Minnetonka** SAI Marketing, 612-935-0777
NM	**Albuquerque** Varigon Associates, 505-883-4080
NY	**E. Syracuse** L-Mar Assocs., 315-437-7779
NY	**Rochester** L-Mar Assocs., 716-323-1000
NC	**Pineville** Electronic Manufacturers' Agents, 704-541-2628
NC	**Winston-Salem** Electronic Manufacturers' Agents, 919-784-7304
OH	**Centerville** SAI Marketing, 513-435-3181
OH	**Columbus** SAI Marketing, 614-876-8650
OH	**Shaker Heights** SAI Marketing, 216-751-3633
OK	**Tulsa** Logic 1 Sales, Inc., 918-494-0765
OR	**Aloha** Micro Sales, Inc., 503-642-1818
PA	**Pittsburgh** SAI Marketing, 412-734-2919
PA	**Wayne** VLSI Technology, Inc., 215-648-0717
TX	**Austin** Logic 1 Sales, Inc., 512-459-1297
TX	**Houston** Logic 1 Sales, Inc., 713-981-0233
TX	**Richardson** Logic 1 Sales, Inc., 214-234-0765
TX	**Richardson** VLSI Tech. Inc., 214-231-6716
WA	**Bellevue** Micro Sales, Inc., 206-451-0568
WI	**Milwaukee** SAI Marketing, 414-332-8024
Can	**Mississauga** bbd Electronics, Inc., 416-821-7800
Can	**Ottawa, Ontario** bbd Electronics, Inc., 613-729-0023
Can	**Pointe Claire, Quebec** bbd Electronics, Inc., 514-697-0804
Intl	**England, Central Milton Keynes** VLSI Technology, Ltd., TEL: 44-908-667595
Intl	**France, Rungis Cedex** VLSI Technology France S.A.R.L., TEL: 33-1-6873141
Intl	**Hong Kong, Hong Kong** Lafitte Garner, Ltd., TEL: 852-5-210265
Intl	**Sweden, Sonia** Nordisk Arrayteknik AB, TEL: 08 7349935
Intl	**Switzerland, Zurich, Postfach** Fabrimex AG, TEL: 01-2512929
Intl	**Taiwan, Taipei** E.P.I. Materials Taiwan, Ltd., TEL: 2-24898
Intl	**West Germany, Munich** VLSI Technology, GmbH, TEL: 49-89-926905-0

Distributors

AL	**Huntsville** Arrow Electronics, Inc., 205-837-6955
AZ	**Phoenix** Arrow Electronics, Inc., 602-968-4800
CA	**East Bay** Arrow Electronics, Inc., 415-487-4600
CA	**Los Angeles** Arrow Electronics, Inc., 818-701-7500
CA	**Orange County** Arrow Electronics, Inc., 714-838-5422
CA	**Sacramento** Arrow Electronics, Inc., 916-925-7456
CA	**San Diego** Arrow Electronics, Inc., 619-565-4800
CA	**San Francisco** Arrow Electronics, Inc., 408-745-6600
CO	**Denver** Arrow Electronics, Inc., 303-696-1111
CT	**Wallingford** Arrow Electronics, Inc., 203-265-7741
FL	**Clearwater** Arrow Electronics, Inc., 813-576-8995
FL	**Fort Lauderdale** Arrow Electronics, Inc., 305-429-8200
FL	**Melbourne** Arrow Electronics, Inc., 305-725-1480
GA	**Atlanta** Arrow Electronics, Inc., 404-449-8252
IL	**Chicago** Arrow Electronics, Inc., 312-397-3440
IN	**Indianapolis** Arrow Electronics, Inc., 317-243-9353
IA	**Cedar Rapids** Arrow Electronics, Inc., 319-395-7230
MD	**Baltimore** Arrow Electronics, Inc., 301-995-0003
MA	**Boston** Arrow Electronics, Inc., 617-933-8130
MI	**Detroit** Arrow Electronics, Inc., 313-971-8220
MI	**Grand Rapids** Arrow Electronics, Inc., 616-243-0912
MN	**Minneapolis** Arrow Electronics, Inc., 612-830-1800
MO	**St. Louis** Arrow Electronics, Inc., 314-567-6888
NH	**Manchester** Arrow Electronics, Inc., 603-668-6968
NJ	**Fairfield** Arrow Electronics, Inc., 201-575-5300
NJ	**Marlton** Arrow Electronics, Inc., 609-596-8000
NM	**Albuquerque** Arrow Electronics, Inc., 505-243-4566
NM	**Long Island** Arrow Electronics, Inc., 516-231-1000
NM	**Rochester** Arrow Electronics, Inc., 716-427-0300
NM	**Syracuse** Arrow Electronics, Inc., 315-652-1000
NC	**Raleigh** Arrow Electronics, Inc., 919-876-3132
NC	**Winston-Salem** Arrow Electronics, Inc., 919-725-8711
OH	**Cleveland** Arrow Electronics, Inc., 216-248-3990
OH	**Columbus** Arrow Electronics, Inc., 614-885-8362
OH	**Dayton** Arrow Electronics, Inc., 513-435-5563
OK	**Tulsa** Arrow Electronics, Inc., 918-665-7700
OR	**Portland** Arrow Electronics, Inc., 503-684-1690
PA	**Philadelphia** Arrow Electronics, Inc., 215-928-1800
PA	**Pittsburgh** Arrow Electronics, Inc., 412-856-7000
RI	**East Providence** Arrow Electronics, Inc., 401-431-0980
TX	**Austin** Arrow Electronics, Inc., 512-835-4180
TX	**Dallas** Arrow Electronics, Inc., 214-380-6464
TX	**Houston** Arrow Electronics, Inc., 713-530-4700
UT	**Salt Lake City** Arrow Electronics, Inc., 801-972-0404
VA	**Richmond** Arrow Electronics, Inc., 804-282-0413
WA	**Seattle** Arrow Electronics, Inc., 206-643-4800
WI	**Milwaukee** Arrow Electronics, Inc., 414-764-6600
Can	**Montreal** Arrow Electronics, Inc., 514-735-5511
Can	**Ottawa** Arrow Electronics, Inc., 613-226-6903
Can	**Quebec City** Arrow Electronics, Inc., 418-687-4231
Can	**Toronto** Arrow Electronics, Inc., 416-661-0220
Intl	**Puerto Rico, San Juan** Arrow Electronics, Inc., TEL: 809-723-6500

Votrax

Votrax
1394 Rankin
Troy, Michigan 48083
Business Products Group—313-588-2050
TELEX: 8102324140 VOTRAX TRMI

Distributors

Intl	**Australia, Sydney** Dick Smith Electronics Pty., Ltd., TEL: 61 2 888 3200
Intl	**West Germany, Wiesbaden** Dr. Otto Soskuty, TEL: 6121 463822

VTC Inc.

VTC Inc.
2401 E. 86th St.
Bloomington, Minnesota 55420
612-854-8830

Sales Office & Representatives

AL	**Huntsville** The Novus Group, 205-881-2207
CA	**Newport Beach** Leading Concept Technologies, 714-851-0654
CA	**Santa Ana** VTC Incorporated, 714-557-3258, 714-557-3259
CA	**Sunnyvale** ELECTEC, 408-747-1722

VTC Inc. (Cont)

CO **Denver**
Quorum 3 Sales Group, Inc., 303-696-8480

GA **Lilburn**
The Novus Group, Inc., 404-381-1015

MA **Melrose**
Professional Component Sales, Inc., 617-665-2340

MN **Eden Prairie**
High Technology Sales Associates, 612-944-7274

NH **Salem**
VTC Incorporated, 603-893-6828

NJ **Cherry Hill**
Trinkle Sales, Inc., 609-795-4200

NY **Binghamton**
Empire Technical Associates, Inc., 607-772-0651

NY **New Hyde Park**
Tri-Tek Associates, Inc., 516-747-8851

NC **Raleigh**
The Novus Group, Inc., 919-872-3966

OK **Tulsa**
MRep, 918-665-3562

TX **Dallas**
MRep, 214-669-9706

TX **Grape Vine**
MRep, 817-482-7503

TX **Houston**
MRep, 713-461-4197

TX **Missouri City**
MRep, 713-261-0798

TX **Round Rock**
MRep, 512-244-6755

UT **Salt Lake City**
Quorum 3 Sales Group Inc., 801-943-9227

Intl **China, Taiwan**
General Industries Inc., TEL: (02)764-5162

Intl **Singapore**
Dynamic Systems Electronics, TEL: (65)264-1682

Waferscale

Waferscale Integration, Inc.
47280 Kato Road
Freemont, California 94538
415-656-5400
TELEX: 289255

Weitek

Weitek Corporation
3255 Scott Boulevard, Building 2B
Santa Clara, California 95054
408-727-6625
TELEX: 171596 AAA Com Suvl

Sales Office & Representatives

Intl **Austria, Vienna**
Nano 80, TEL: 222-65-1522

Intl **Belgium, Brussels**
Diode Belgium, TEL: 2-216-2100

Intl **England, Maidenhead**
Manhattan Skyline Ltd., TEL: 0628-75851

Intl **France, Palaiseau**
Franelec, TEL: 6-920-20-02

Intl **Israel, Tel Aviv**
R.N. Electronic Agencies Ltd., TEL: 79-69-27

Intl **Italy, Milano**
Cefra S.R.L., TEL: 02-23-52-64

Intl **Japan, Tokyo**
C. Itoh Electronics, Inc., TEL: 03-497-8097

Intl **Switzerland, Biel**
Zentrama Technick AG, TEL: 32-23-35-53

Intl **The Netherlands, Ed Haaften**
Techmation Electronics BV, TEL: 041-89-22-22

The Western Design Center

The Western Design Center, Inc.
2168 East Brown Road
Mesa, Arizona 85203
602-962-4545

Western Digital

Western Digital Corporation
2445 McCabe Way
Irvine, California 92714
714-863-0102
TWX: 910-595-1139

Sales Office & Representatives

Intl **Australia, Sandringham, Victoria**
Daneva Australia, TEL: 61/03-5985622

Intl **Belgium, Ougree (Liege)**
MCA Tronix, TEL: 41/362795, 41/362780

Intl **Brazil, Sao Paulo-SP**
Cosele Ltda., TEL: 230/1733, 230/1994

Intl **Denmark, Kokkedal**
C-88, TEL: 45/02-244888

Intl **England, Ilford, Essex**
Pronto Enctrns., TEL: 44/01-5546222

Intl **Finland, Espoo**
Komdel OY, TEL: 358/90-885011

Intl **France, Levallois-Perret**
Technology Resources, TEL: 33/1-757-3133

Intl **Hong Kong, Quarry Bay**
White & Allcock, TEL: 852/5-632112-8, 852/5-644312

Intl **India, Trivandrum, PIN**
Kryonix

Intl **Israel, Givatayim**
E.I.M. Intl., TEL: 761423, 767251

Intl **Italy, Milano**
Comprel S.R.L., TEL: 39/2-6120641

Intl **Japan, Tokyo**
Panetron Div., TEL: 81/03-343-4411

Intl **Netherlands, Am Utrecht**
Diode BV, TEL: 31/030-884214

Intl **Norway, Nesbru**
Hans. h. Schive, TEL: 47/02-785160

Intl **South Africa, Pinegowrie**
South Continental Dev., TEL: 27/(011) 798-2400

Intl **Spain, Madrid**
Diode SA., TEL: 455/3686

Intl **Sweden, Vaellingby**
Teleimport AB, TEL: 46/08-890265

Intl **Switzerland, Baden-Daettwil**
W. Stolz AG, TEL: 41/056-840151

Intl **Taiwan, Taipei**
Taiwan Automation, TEL: 886/02-77109403

Intl **United Kingdom,Epsom**
Europe Regional Sales Office, TEL: 44-3727-42178

Intl **West Germany, Munchen**
Electronics 2000, TEL: 49/089-434061

Distributors

Intl **Australia, Sandringham, Victoria**
Daneva Australia, TEL: 61/03-5985622

Intl **Belgium, Ougree (Liege)**
MCA Tronix, TEL: 41/362795, 41/362780

Intl **Brazil, Sao Paulo-SP**
Cosele Ltda., TEL: 230/1733, 230/1994

Intl **Denmark, Kokkedal**
C-88, TEL: 45/02-244888

Intl **England, Ilford, Essex**
Pronto Electronics, TEL: 44/01-5546222

Intl **Finland, Espoo**
Komdel OY, TEL: 358/90-885011

Intl **France, Levallois-Perret**
Technology Resources, TEL: 33/1-757-3133

Intl **Hong Kong, Quarry Bay**
White & Allcock, TEL: 852/5-632112-8, 852/5-644312

Intl **India, Trivandrum, PIN**
Kyronix

Intl **Israel, Givatayim**
E.I.M. Intl., TEL: 761423, 767251

Intl **Italy, Milano**
Comprel S.R.L., TEL: 39/2-6120641

Intl **Japan, Tokyo**
Panetron Div., TEL: 81/03-343-4411

Intl **Netherlands, Am Utrecht**
Diode BV, TEL: 31/030-884214

Intl **Norway, Nesbru**
Hans H. Schive, TEL: 47/02-785160

Intl **South Africa, Pinegowrie**
South Continental Dev., TEL: 27/(011) 798-2400

Intl **Spain, Madrid**
Diode SA., TEL: 455/3686

Intl **Sweden, Vaellingby**
Teleimport AB, TEL: 46/08-890265

Intl **Switzerland, Baden-Daettwil**
W. Stolz AG, TEL: 41/056-840151

Intl **Taiwan, Taipei**
Taiwan Automation, TEL: 886/02-77109403

Intl **West Germany, Munchen**
Electronics 2000, TEL: 49/089-434061

WinSystems

WinSystems Inc.
Box 121361
Arlington, Texas 76012
817-274-7553

Wintek

Wintek Corporation
1801 South Street
Lafayette, Indiana 47904-2993
317-742-8428
800-742-6809
TELEX: 70-9079

Xicor

Xicor, Inc.
851 Buckeye Court
Milpitas, California 95035
408-946-6920
TWX: 910-379-0033

Sales Office & Representatives

AL **Huntsville**
CSR Electronics, Inc., 205-533-2444

AZ **Scottsdale**
Thom Luke Sales, Inc., 602-941-1901

CA **Irvine**
Centaur Corporation, 714-261-2123

CA **Los Altos**
Ewing-Foley, Inc., 415-941-4525

CA **Milpitas**
Xicor Northwestern Sales Office, 408-292-2011

CA **Mtn. View**
Fegu, 415-961-2380

CA **Newport Beach**
Xicor Southwestern Sales Office, 714-752-8700

CA **Roseville**
Ewing-Foley, Inc., 916-969-2672

Xicor (Cont)

CA	**San Diego** Centaur Corporation, 619-278-4950
CA	**Woodland Hills** Centaur Corporation, 818-704-1655
CO	**Niwot** D/Z Assocs., Inc., 303-652-2173
CT	**Danbury** Xicor Mid-Atlantic Sales Office, 203-743-1701
CT	**Wallingford** Hall-Mark, 203-269-0100
CT	**Waterbury** HLM Assocs., 203-753-9894
FL	**Altamonte Springs** Xicor Southeast, 305-767-8010
FL	**Clearwater** Delmac Sales Inc., 813-447-5192
FL	**Ft. Lauderdale** Delmac Sales Inc., 305-739-0016
FL	**Orlando** Delmac Sales Inc., 305-898-4688
FL	**Palm Bay** Delmac Sales Inc., 305-724-8377
GA	**Atlanta** CSR Electronics Inc., 404-396-3720
IL	**Elk Grove Village** Oasis Sales Corp., 312-640-1850
IL	**Schaumburg** Xicor North Central Sales Office, 312-490-1310
IN	**Indianapolis** Electro Reps. Inc., 317-842-7202
IN	**New Haven** Electro Reps Inc., 219-493-4293
IA	**Cedar Rapids** Chuck Horn & Associates, 319-393-8703
KS	**Merriam** Midwest Tech Sales, 913-236-8557
KS	**Wichita** Midwest Tech Sales, 316-262-7240
MD	**Baltimore** Micro Comp. Inc., 301-247-0400
MA	**Stoneham** Advanced Design Group, 617-279-0216
MA	**Stoneham** Xicor East Sales Office, 617-279-0220
MI	**Novi** Action Compnent Sales, 313-349-3940
MN	**Bloomington** John G. Twist Co., 612-835-2120
MO	**St. Charles** Midwest Tech Sales, 314-441-1012
NJ	**Mt. Laurel** Comtek Inc., 609-235-8505
NJ	**Parsippany** HLM Assocs., 201-263-1535
NY	**Northport** HLM Assocs., 516-757-1606
NY	**Syracuse** Pi Tronics, 315-455-7346
NC	**Matthew** CSR Electronics Inc., 704-847-1927
NC	**Raleigh** CSR Electronics Inc., 919-878-9200
OH	**Centerville** Omega Sales Corp., 513-434-5507
OH	**University Hts.** Omega Sales Corp, 216-381-1401
OK	**Tulsa** Nova Marketing, 918-743-6202
OR	**Tigard** Vantage Corporation, 503-620-3280
TN	**Knoxville** CSR Electronics Inc., 615-673-0222
TX	**Austin** Nova Mktg. Inc., 512-343-2321
TX	**Dallas** Nova Mktg., Inc., 214-750-6082
TX	**Dallas** Xicor Southcentral, 214-669-2022
TX	**Houston** Nova Mktg., Inc., 713-988-6082
UT	**Salt Lake City** D/Z Assocs., Inc., 801-483-1025, 801-486-4233
VA	**Huddleston** Micro Comp. Inc., 703-297-7614
WA	**Bellevue** Vantage Corp., 206-455-3460
WI	**Brookfield** Oasis Sales Corp., 414-782-6660
Can	**Concord, Ontario** Kaytronics, 416-669-2262
Can	**Kanata, Ontario** Kaytronics, Inc., 613-592-6606
Can	**Surrey, B.C.** Kaytronics, 604-581-5005
Can	**Ville St. Pierre, Quebec** Kaytronics, 514-367-0101
Intl	**Australia, Burwood, Victoria** R & D Electronics, TEL: 61.3.288.8232
Intl	**Austria, Wien** Becos Electronic, TEL: 0222.83.41.01
Intl	**Belgium, Keerbergen** Microtron, TEL: 32.16.60.05.86
Intl	**Denmark, Havdrup** Henckel Elektronik, TEL: 45.2.38.57.91
Intl	**England, Thame Oxon** Micro Call Ltd., TEL: 44.84.421.5405
Intl	**Finland, Helsinki** Turion Oy, TEL: 358.0.37.21.44
Intl	**France, LeChesney** A2M, TEL: 33.3.954.91.13
Intl	**Hong Kong, Hong Kong** CET Ltd., TEL: 5.200922
Intl	**Israel, Tel Aviv** Telsys, Ltd., TEL: 972.3.494881
Intl	**Italy, Cassina de' Pecchi** Dott. Ing. Giuseppe De Mico S.p.A., TEL: 39.2.95.20.551
Intl	**Japan, Tokyo** Internix, TEL: 81.3.369.1105
Intl	**Korea, Seoul** Kortronics Enterprise, TEL: 82.2.635.1043
Intl	**Netherlands, Ijssel** Alcom Electronics, TEL: 31.10.51.95.33
Intl	**Norway, Oslo** Eltron A/S, TEL: 02.50.0650
Intl	**Singapore** Dynamer International Ltd., TEL: 7476188
Intl	**South Africa** Promilect (Pty.) Ltd., TEL: 011.787.14.00
Intl	**Spain, Madrid** Amitron S.A., TEL: 34.1.247.93.13
Intl	**Sweden, Solna** Naxab, TEL: 46.8.9.8.51.40
Intl	**Switzerland, Baden-Dattwil** W. Stolz AG, TEL: 41.056.84.01.51
Intl	**Switzerland, Geneva** W. Stolz Ag, TEL: 022.98.78.77
Intl	**Taiwan, Taipei** Sertek International Corp., TEL: 886.2.537.5091
Intl	**Turkey, Istanbul** Barkey Ltd., TEL: 01.148.91.47
Intl	**West Germany, Gerlingen** Positron, TEL: 49.7156.3560
Intl	**West Germany, Haar Bei Muenchen** Xicor-International, TEL: 011.49.89.463089

Distributors

AL	**Huntsville** Hall-Mark, 205-837-8700
AL	**Huntsville** Marshall, 205-881-9235
AZ	**Phoenix** Hall-Mark, 602-437-1200
AZ	**Tempe** Marshall, 602-968-6181

DIPLOMAT
Call Diplomat First For
Xicor

- San Francisco, CA (408) 734-1900
- Los Angeles, CA (818) 700-8700
- Orange County, CA (714) 549-8401
- San Diego, CA (619) 292-5693
- Salt Lake City, UT (801) 486-4134
- Minneapolis, MN (612) 559-2500
- Denver, CO (303) 422-9229
- Austin, TX (512) 452-5254
- Dallas, TX (214) 980-1888
- Houston, TX (713) 496-4000
- Chicago, IL (312) 595-1000
- Boston, MA (617) 935-6611
- Danbury, CT (203) 797-9674
- Melville, NY (516) 454-6400
- Syracuse, NY (315) 652-5000
- Cherry Hill, NJ (609) 751-0440
- Totowa, NJ (201) 785-1830
- Philadelphia, PA (215) 546-3730
- Columbia, MD (301) 995-1226
- Atlanta, GA (404) 449-4133
- Clearwater, FL (813) 443-4514
- Fort Lauderdale, FL (305) 974-8700

DIPLOMAT ELECTRONICS CORPORATION

CA	**Canoga Park** Marshall, 818-999-5001
CA	**Chatsworth** Diplomat Elctrns., 818-700-8700
CA	**Costa Mesa** Diplomat Elctrns., 714-549-8401
CA	**El Monte** Marshall, 818-442-7204
CA	**Irvine** Marshall, 714-660-0951
CA	**San Diego** Hall-Mark, 619-268-1201
CA	**San Diego** Marshall, 619-578-9600
CA	**San Jose** Hall-Mark, 408-946-0900
CA	**Sunnyvale** Diplomat Elctrns., 408-734-1900
CA	**Sunnyvale** Milpitas, 408-943-4600
CA	**Tustin** Image Electronics, 714-730-0303
CO	**Denver** Marshall, 303-427-1818
CO	**Englewood** Hall-Mark, 303-790-1662
CO	**Wheat Ridge** Diplomat Elctrns., 303-422-9229
CT	**Danbury** Diplomat Elctrns., 203-797-9674
CT	**Wallingford** Hall-Mark, 203-269-0100
CT	**Wallingford** Marshall, 203-265-3822
FL	**Clearwater** Hall-Mark, 813-576-8691
FL	**Orlando** Hall-Mark, 305-855-4020

Xicor (Cont)

FL	**Orlando**	Marshall, 305-841-1878
FL	**Pompano Beach**	Hall-Mark, 305-971-9280
GA	**Norcross**	Hall-Mark, 404-447-8000
GA	**Norcross**	Marshall, 404-923-5750
IL	**Bensenville**	Diplomat Elctrns., 312-595-1000
IL	**Schaumburg**	Marshall, 312-490-0155
IL	**Wood Dale**	Hall-Mark, 312-860-3800
IN	**Indianapolis**	Marshall, 317-297-0483
KS	**Lenexa**	Hall-Mark, 913-888-4747
KS	**Lenexa**	Marshall, 913-492-3121
MD	**Columbia**	Diplomat Elctrns., 301-995-1226
MD	**Columbia**	Hall-Mark, 301-988-9800
MD	**Gaithersburg**	Marshall, 301-840-9450
MA	**Billerica**	Hall-Mark, 617-935-9777
MA	**Burlington**	Marshall, 617-272-8200
MA	**Woburn**	Diplomat Elctrns., 617-935-6611
MI	**Livonia**	Marshall, 313-525-5850
MN	**Bloomington**	Hall-Mark, 612-854-3223
MN	**Plymouth**	Marshall, 612-559-2211
MO	**Maryland Hts**	Hall-Mark, 314-291-5350
NJ	**Cherry Hill**	Diplomat, 609-751-0518
NJ	**Fairfield**	Hall-Mark, 201-575-4415
NJ	**Fairfield**	Marshall, 201-882-0320
NJ	**Mt. Laurel**	Hall-Mark, 215-355-7300, 609-424-7300
NJ	**Mt. Laurel**	Marshall, 609-234-9100, 215-627-1920
NJ	**Totowa**	Diplomat Elctrns., 201-785-1830
NM	**Albuquerque**	Alliance Electronics, 505-292-3360
NY	**Hauppauge**	Marshall, 516-273-2424
NY	**Johnson City**	Marshall, 607-798-1611
NY	**Liverpool**	Diplomat Elctrns., 315-652-5000
NY	**Melville**	Diplomat Elctrns., 516-454-6334
NY	**Rochester**	Marshall, 716-235-7620
NY	**Ronkonkoma**	Hall-Mark, 516-737-0600
NC	**Raleigh**	Hall-Mark, 919-872-0712
NC	**Raleigh**	Marshall, 919-878-9882
OH	**Dayton**	Marshall, 513-236-8088
OH	**Solon**	Hall-Mark, 216-349-4632
OH	**Worthington**	Hall-Mark, 614-888-3313
OK	**Tulsa**	Hall-Mark, 918-665-3200
OR	**Beaverton**	Marshall, 503-644-5050
TX	**Austin**	Hall-Mark, 512-258-8848
TX	**Austin**	Marshall, 512-837-1991
TX	**Dallas**	Hall-Mark, 214-343-5000
TX	**Dallas**	Marshall, 214-233-5200
TX	**Houston**	Hall-Mark, 713-781-6100
TX	**Houston**	Marshall, 713-789-6600
UT	**Salt Lake City**	Diplomat, 801-486-4134
UT	**Salt Lake City**	Marshall, 801-261-0901
WA	**Bellevue**	Marshall, 206-747-9100
WA	**Kirkland**	Priebe Electronics, 206-821-4695
WI	**New Berlin**	Hall-Mark, 414-797-7844
Can	**Brampton, Ontario**	Zentronics, 416-451-9600
Can	**Calgary, Alberta**	Zentronics, 403-272-1021
Can	**Montreal, Quebec**	Zentronics, 514-735-5361
Can	**Ottawa, Ontario**	Zentronics, 613-238-6411
Can	**Richmond, B.C.**	Zentronics, 604-273-5575
Can	**Waterloo, Ontario**	Zentronics, 519-884-5700
Can	**Willowdale, Ontario**	Electro Sonic, 416-494-1666
Can	**Winnipeg, Manitoba**	Zentronics, 204-775-8661
Intl	**Australia, Burwood, Victoria**	R & D Elctrns., TEL: 61.3.288.8232
Intl	**France, Le Chesnay**	A2M, TEL: 33.3.954.91.13
Intl	**Israel, Tel Aviv**	Telsys Ltd., TEL: 972.3.494881
Intl	**Japan, Tokyo**	Internix, Inc., TEL: 81.3.369.1105
Intl	**New Zealand, Auckland**	Delphi Inds. Ltd., TEL: 64.9.563.259
Intl	**South Africa, Pinegowrie**	Promilect Ltd., TEL: 011.789.14.00
Intl	**Sweden, Solina**	Naxab, TEL: 46.8.9.8.51.40
Intl	**United Kingdom, Thame Oxon**	Micro Call Ltd., TEL: 44.84.421-5405
Intl	**West Germany, Gerlingen**	Positron, TEL: 49.07156.3560

Xycom

Xycom
750 North Maple Road
Saline, Michigan 48176
313-429-4971

Xylogics

Xylogics, Inc.
144 Middlesex Turnpike
Burlington, Massachusetts 01803
617-272-8140
TWX: 710-332-0262

Zendex

Zendex Corporation
6700 Sierra Lane
Dublin, California 94568
415-828-3000

Ziatech

Ziatech Corporation
3433 Roberto Court
San Luis Obispo, California 93401
805-541-0488
TELEX: 4992316

Specific product information:
Jim Eckford
Application engineering:
Alan Bevely
Literature:
Stacy Bartlett
Price and delivery:
Ron Giovanelli
Place an order:
Ron Giovanelli
Follow-up an order:
Kathleen Intorf

Sales Office & Representatives

Intl	**Australia, Burwood, Victoria**	R & D Electronics, TEL: (03) 288-8911
Intl	**Australia, Crows Nest, N.S.W.**	R & D Electronics, TEL: (02) 439-5488
Intl	**Australia, Prospect**	A.J. Distributors, Pty., TEL: (08) 269-1244
Intl	**Australia, South Melbourne, Victoria**	A.J. Distributors, Pty., TEL: (03) 699-8365
Intl	**Australia, Sydney, N.S.W.**	A.J. Distributors, Pty., TEL: (02) 712-1077
Intl	**France, Buc**	Yrel, TEL: (3) 956.81.42
Intl	**Israel, Tel Aviv**	Colint, Ltd., TEL: 03-453203
Intl	**Italy, Milano**	Technitron, S.R.L., TEL: 02-8242112
Intl	**Italy, Roma**	Technitron, S.R.L., TEL: 06-837035
Intl	**Japan, Tokyo**	Syscon Corporation, TEL: (03) 863-7688
Intl	**Netherlands, Breda**	Intelligent Systems, TEL: (076) 22.41.82
Intl	**New Zealand, Auckland**	G.T.S. Engineering, TEL: (AUCK) 546-745, 543-214
Intl	**New Zealand, Wellington**	G.T.S. Engineering, TEL: (04) 726-701
Intl	**Switzerland, Zurich**	Max Meier Elektronik AG, TEL: 01/491.21.21
Intl	**United Kingdom, Slough, Berks**	Data Translation, Ltd., TEL: Burnham (06286) 3412
Intl	**West Germany, Puchheim**	Stemmer Elektronik, TEL: (089) 80.60.61

Zilog

Zilog, Inc.
1315 Dell Avenue
Campbell, California 95008
408-370-8000
TWX: 910-338-7621

Sales Office & Representatives

AL	**Huntsville**	Elctrn. Sales, Inc., 205-533-1735

Zilog (Cont)

AZ **Scottsdale**
Thom Luke Sales, Inc., 602-941-1901

AZ **Tempe**
Quatra Associates, 602-820-7050

CA **Agoura**
Zilog, 818-707-2160

CA **Campbell**
Sales & Tech. Ctr. Zilog, Inc., 408-370-8000

CA **Costa Mesa**
Zilog, 714-261-1281

CA **Orangevale**
Aspen Technologies, 916-988-8303

CA **San Diego**
Earle Associates, 619-278-5441

CA **Westlake Village**
Hi-Tech Rep Co., 818-706-2916

CO **Boulder**
Sales & Tech. Ctr., Zilog Inc., 303-440-3971

CO **Englewood**
Thorson Rocky Mountain, 303-779-0666

CT **Southbury**
Calita/Lindco, 203-264-7200

FL **Clearwater**
Dyne-A-Mark Corp., 813-441-4702

FL **Fort Lauderdale**
Dyne-A-Mark Corp., 305-771-6501

FL **Largo**
Tech. Ctr. Zilog, Inc., 813-585-2533

FL **Maitland**
Dyne-A-Mark Corp., 305-629-5557

FL **Palm Bay**
Dyne-A-Mark Corp., 305-727-0192

GA **Atlanta**
Sales & Tech. Ctr. Zilog, Inc., 404-451-8425

GA **Norcross**
Elctrn. Sales, Inc., 404-448-6554

IL **Northbrook**
D. Dolin Sales, 312-498-6770

IL **Schaumburg**
Sales & Tech. Ctr. Zilog, Inc., 312-885-8080

IN **Carmel**
Giesting & Assoc., 317-844-5222

IN **Ft. Wayne**
Giesting & Assoc., 219-486-1912

KS **Overland Park**
Advance Technical Sales, 913-642-6675

MD **Severna Park**
New Era Sales, 301-544-4100

MA **Burlington**
Sales & Tech Ctr., Zilog, 617-273-4222

MA **Lexington**
Nova Sales, 617-861-1820

MN **Edina**
Zilog, 612-831-7611

MN **Minneapolis**
H.M.R., Inc., 612-881-2122

MO **St. Louis**
Advance Technical Sales, 314-878-2921

NJ **Cedar Knolls**
Sales & Tech. Ctr. Zilog, Inc., 201-540-1671

NJ **Closter**
Calita Sales, 201-768-6100

NJ **Haddonfield**
Sunday O'Brien, 609-429-4013

NJ **Mt. Laurel**
Zilog, 609-778-8070

NM **Albuquerque**
Quatra Associates, 505-821-1455

NY **E. Syracuse**
L-Mar Assocs., Inc., 315-437-7779

NY **Hauppauge**
Calita Sales, 516-582-5432

NY **Rochester**
L-Mar Assocs., Inc., 716-323-1000

NC **Raleigh**
Giesting and Assoc., 919-848-1931

OH **Seven Hills**
216-447-1480

TN **Gray**
Glen White Assoc., 615-477-8850

TX **Austin**
Nova Marketing, Inc., 512-343-2321

TX **Dallas**
Nova Marketing, 214-750-6082

TX **Houston**
Nova Marketing, 713-988-6087

TX **Richardson**
Sales & Tech. Ctr. Zilog, Inc., 214-231-9090

UT **West Valley**
Thorson Rocky Mountain, 801-973-7969

VA **Lynchburg**
Glen White Assoc., 804-237-6291

WA **Bellevue**
Northwest Marketing Assoc., 206-455-5846

WI **Milwaukee**
D. Dolin Sales, 414-482-1111

Can **Burnaby**
Hi-Tech Sales Ltd., 604-524-2131

Can **Calgary**
Hi-Tech Sales Ltd., 403-251-4745

Can **Downsview, Ontario**
Har-Tech Electronics, 416-665-7773

Can **Mississauga, Ontario**
416-665-7773

Can **Ottawa, Ontario**
Har-Tech Electronics, 613-230-8431

Can **Pt. Clair, Quebec**
Har-Tech Electronics, 514-697-6713

Intl **Hong Kong, Kowloon**
Zilog Asia Ltd., TEL: 011 852-3 723 8979

Intl **Japan, Tokyo**
Zilog/Japan, TEL: 011 81 3 587-0528

Intl **United Kingdom, Berkshire**
Zilog (U.K.) Ltd., TEL: 011 44 628-39200

Intl **West Germany, Munich**
Zilog GmbH, TEL: 011 49 89-612-6046

Distributors

AL **Huntsville**
Hall-Mark Elctrns., 205-837-8700

AL **Huntsville**
Schweber Elctrns., 205-882-2200

AZ **Phoenix**
Hall-Mark Elctrns., 602-437-1200

AZ **Phoenix**
Kierulff Elctrns., 602-243-4101

AZ **Phoenix**
Schweber Electronics, 602-997-4874

AZ **Scottsdale**
Western Microtechnology, 602-948-4240

AZ **Tempe**
Anthem Elctrns., 602-966-6600

CA **Canoga Park**
Hall-Mark Electronics, 818-716-7300

CA **Canoga Park**
Schweber Elctrns., 213-999-4702

CA **Chatsworth**
Anthem Elctrns., 213-700-1000

CA **Citrus Hts.**
Hall-Mark/Sacramento, 916-722-8600

CA **Cupertino**
Western Microtechnology, 408-725-1660

CA **Irvine**
Anthem Electronics, 714-768-4444

CA **Irvine**
Schweber Elctrns., 714-863-0200

CA **Los Angeles**
Kierulff Elctrns., 213-725-0325

CA **Reseda**
JAN Devices, Inc., 213-708-1100

CA **Sacramento**
Schweber Elctrns., 916-929-9732

CA **San Diego**
Anthem Elctrns., 619-453-9005

CA **San Diego**
Kierulff Elctrns., 619-278-2112

CA **San Jose**
Anthem Elctrns., 408-295-4200

CA **San Jose**
Hall-Mark Electronics, 408-946-0900

CA **San Jose**
Kierulff Electronics, 408-971-2600

CA **San Jose**
Schweber Elctrns., 408-946-7171

CA **San Jose**
Schweber Electronics, 408-946-7171

CA **Torrance**
Hall-Mark/West L.A., 213-217-8400

CA **Tustin**
Hall-Mark Electronics, 714-669-4700

CA **Tustin**
Kierulff Elctrns., 714-731-5711

CO **Englewood**
Anthem Electronics, 303-790-4500

CO **Englewood**
Hallmark Electronics, 303-790-1662

CO **Englewood**
Kierulff Elctrns., 303-790-4444

CO **Wheatridge**
Bell Inds., 303-424-1985

CT **Danbury**
Schweber Elctrns., 203-748-7080

CT **Wallingford**
Kierulff Elctrns., 203-265-1115

FL **Altamonte Springs**
Schweber Elctrns., 305-331-7555

FL **Clearwater**
Hall-Mark Electronics, 813-530-4543

FL **Ft. Lauderdale**
Kierulff Electronics, 305-486-4004

FL **Hollywood**
Schweber Elctrns., 305-927-0511

FL **Orlando**
Hall-Mark Elctrns., 305-855-4020

FL **Pompano Beach**
Hall-Mark Elctrns., 305-971-9280

FL **St. Petersburg**
Kierulff Elctrns., Inc., 813-576-1966

GA **Norcross**
Hall-Mark Elctrns., 404-447-8000

GA **Norcross**
Kierulff Electronics, 404-447-5252

GA **Norcross**
Schweber Elctrns., 404-449-9170

IL **Elk Grove Village**
Schweber Elctrns., 312-364-3750

IL **Itasca**
Kierulff Elctrns., 312-250-0500

IL **Wood Dale**
Hall-Mark Elctrns., 312-860-3800

IL **Wood Dale**
Hall-Mark Electronics, 312-860-3800

IN **Indianapolis**
Advent Electronics, 317-872-4910

IA **Cedar Rapids**
Advent Electronics, 319-363-0221

IA **Cedar Rapids**
Schweber Elctrns., 319-373-1417

KS **Lenexa**
Hall-Mark Elctrns., 913-888-4747

KS **Overland Park**
Schweber Elctrns., 913-492-2921

MD **Columbia**
Hall-Mark Elctrns., 301-988-9800

MD **Gaithersburg**
Schweber Elctrns., 301-840-5900

MA **Bedford**
Schweber Elctrns., 617-275-5100

MA **Billerica**
Hall-Mark Electronics, 617-935-9777

MA **Billerica**
Kierulff Elctrns., 617-667-8331

MA **Wilmington**
Lionex Corp., 617-657-5170

MI **Farmington Hills**
Advent Electronics, 313-447-1650

MI **Livonia**
Schweber Elctrns., 313-525-8100

MN **Bloomington**
Hall-Mark Elctrns., 612-854-3223

Zilog (Cont)

MN	**Edina** Kierulff Elctrns., 612-941-7500
MN	**Edina** Schweber Elctrns., 612-941-5280
MO	**Earth City** Hall-Mark/St. Louis, 314-291-5350
MO	**Earth City** Schweber Elctrns., 314-739-0526
MO	**Maryland Heights** Kierulff Elctrns., 314-739-0855
NH	**Manchester** Schweber Electronics, 603-625-2250
NJ	**Fairfield** Hall-Mark Electronics, 201-575-4415
NJ	**Fairfield** Kierulff Elctrns., 201-575-6750
NJ	**Fairfield** Lionex Corp., 201-227-7960
NJ	**Fairfield** Schweber Elctrns., 201-227-7880
NJ	**Mt. Laurel** Hall-Mark Elctrns., 609-235-1900
NM	**Albuquerque** Alliance Electronics, 505-292-3360
NY	**Hauppauge** Lionex Corp., 516-273-1660
NY	**Rochester** Schweber Elctrns., 716-424-2222
NY	**Westbury** Schweber Elctrns., 516-334-7474
NC	**Raleigh** Hall-Mark Elctrns., 919-872-0712
NC	**Raleigh** Kierulff Elctrns., 919-872-8410
NC	**Raleigh** Schweber Elctrns., 919-876-0000
OH	**Beachwood** Schweber Elctrns., 216-464-2970
OH	**Cincinnati** Hall-Mark Elctrns., 216-563-5980
OH	**Cleveland** Kierulff Elctrns., 216-587-6558
OH	**Dayton** Schweber Elctrns., 513-439-1800
OH	**Worthington** Hall-Mark/Columbus, 614-888-3313
OK	**Tulsa** Hall-Mark Elctrns., 918-665-3200
OK	**Tulsa** Kierulff Elctrns., 918-252-7537
OK	**Tulsa** Schweber Elctrns., 918-622-8000
OR	**Beaverton** Western Microtechnology, 503-629-2082
OR	**Lake Oswego** Anthem Electronics, 503-684-2661
OR	**Portland** Kierulff Elctrns., 503-641-9150
PA	**Horsham** Lionex Corporation, 215-443-5150
PA	**Horsham** Schweber Elctrns., 215-441-0600
PA	**Pittsburgh** Schweber Elctrns., 412-782-1600
TX	**Austin** Hall-Mark Elctrns., 512-258-8848
TX	**Austin** Kierulff Elctrns., 512-835-2090
TX	**Austin** Schweber Elctrns., 512-458-8253
TX	**Dallas** Hall-Mark Corporate Hq., 214-343-5866
TX	**Dallas** Hall-Mark Elctrns., 214-553-4300
TX	**Dallas** Kierulff Elctrns., 214-343-2400
TX	**Dallas** Schweber Elctrns., 214-661-5010
TX	**Houston** Hall-Mark Elctrns., 713-781-6100
TX	**Houston** Kierulff Elctrns., 713-530-7030
TX	**Houston** Schweber Elctrns., 713-784-3600
UT	**Salt Lake City** Anthem Electronics, 801-973-8555
UT	**Salt Lake City** Bell Inds., 801-972-6969
UT	**Salt Lake City** Kierulff Elctrns., 801-973-6913
WA	**Kent** Kierulff Elctrns., 206-575-4420
WA	**Redmond** Anthem Electronics, 206-881-0850
WI	**Brookfield** Schweber Elctrns., 414-784-9020
WI	**New Berlin** Hall-Mark Elctrns., 414-797-7844
WI	**Waukesha** Kierulff Elctrns., 414-784-8160
Can	**Calgary, Alberta** La Varah Ltd., 403-255-9550
Can	**Dorval, Quebec** Semad, 514-636-4614
Can	**Downsview, Ontario** Future Elctrns., 416-638-4771
Can	**Edmonton, Alberta** La Varah Ltd., 604-873-3211
Can	**Markham, Ontario** Semad, 416-475-8500
Can	**Markham, Ontario** Semad Electronics, 416-475-8500
Can	**Ottawa, Ontario** Future Elctrns., 613-820-8313
Can	**Ottawa, Ontario** Semad, 613-729-6145
Can	**Pt. Claire, Quebec** Future Elctrns., 514-694-7710
Can	**Vancouver, British Columbia** Future Elctrns., 604-438-5545
Can	**Vancouver, British Columbia** La Varah Ltd., 604-873-3211
Can	**Winnipeg, Manitoba** La Varah Ltd., 204-633-6190
Intl	**Australia, Adelaide, S.A.** Protronics Pty. Ltd. (S.A.), TEL: (61) (08) 212-3111
Intl	**Australia, Burwood, Victoria** R & D Electronics, TEL: 011-61-3-288-8232
Intl	**Australia, Camperdown** George Brown & Co. Pty., Ltd., TEL: (61) (02) 519-5855
Intl	**Austria Vienna** Kontron Electronik, TEL: 0222-670631
Intl	**Belgium, Merelbeke** Heliagraph, TEL: 91-301314
Intl	**Denmark, Glostrup** Ditz Schweitzer A/S, TEL: 2-453044
Intl	**Denmark, Naerum** SC Metric A/S, TEL: 2-804200
Intl	**Finland, Espoo** Finn Metric oy, TEL: 0-42-39-11
Intl	**Finland, Espoo** Oy Atomica, TEL: 90-423-533
Intl	**France, Antony** Almex, TEL: 666 2112
Intl	**France, Asnieres Cedex** Alfatronic, TEL: 791-44-44
Intl	**France, Le Chesnay** A2M, TEL: 954-9113
Intl	**Greece, Athens** Microsystems O.E., TEL: 1-346-9002
Intl	**Hong Kong, Hong Kong** Electronic Scientific Eng. Ltd., TEL: 852-05-745611
Intl	**India, Sunnyvale, CA** Micro Aids International, TEL: 408-738-2490
Intl	**India, Trivandrum** Kryonix, TEL: (471) 63805
Intl	**Israel, Ramat Hasharon** R.D.T., TEL: (9723) 483211-5
Intl	**Italy, Milan** De Mico SpA, TEL: 02-9520551
Intl	**Japan, Tokyo** Kanematsu Elctrn. Comps. Corp., TEL: (81) (03) 447-4141
Intl	**Japan, Tokyo** Matsushita Elec. Trading Co., Ltd., TEL: (81) (03) 435-4580
Intl	**Japan, Tokyo** Nihon Teksel Co., Ltd., TEL: (81) (03) 461-5121
Intl	**Korea, Seoul** Duksung Trading Co., TEL: (82) (02) 854-5047
Intl	**Latin America, Mtn. View** Intectra, TEL: 415-967-8818
Intl	**Netherlands, Zoetermeer** Tekelec Airtronic, TEL: 79-310100
Intl	**New Zealand, Auckland** Micro Computer Elctrns. Co., Ltd., TEL: (64) (09) 504-774
Intl	**Norway, Oslo** Metric A/S, TEL: 2-282624
Intl	**People's Republic of China, San Francisco, CA** Kanematsu-Gosho USA Inc., TEL: 415-788-3800
Intl	**Portugal, Lisbon** Soc. Com. Crocker Delaforce & Co. Ltd., TEL: 68-01-41424344
Intl	**Spain, Barcelona** Unitronics S.A., TEL: 1-242-5204
Intl	**Sweden, Solna** Scandia Metric AB, TEL: 8-820 400, TLX 10766 Mctrics
Intl	**Sweden, Stockholm** AB Nordquist & Berg, TEL: 46-8-69-04-00
Intl	**Switzerland, Regensdorf** V. Moor AG, TEL: 01-8406644
Intl	**Taiwan, Taipei** Multitech Intl. Corp., TEL: (86) (02) 713-4022
Intl	**Turkey, Istanbul** Electro Akustik Sanayi, TEL: (90) 11-48-50-77
Intl	**United Kingdom, Bar Hill, Cambridge** Hi-Tek Distribution, TEL: 954-81996
Intl	**United Kingdom, Burnham, Bucks** Macro Mktg., Ltd., TEL: 6286-4422
Intl	**United Kingdom, Slough, Berkshire** Crellon Elctrns. Ltd., TEL: 6286-4434/4300
Intl	**West Germany, Eching** Kontron Electronik GmbH, TEL: 089-31901-367
Intl	**West Germany, Uterhaching** E.B.V. Electronik, TEL: 89-611051

Zuken America

Zuken America
2010 N. First St., Ste. 205
San Jose, California 95131
408-436-1090

Zycad

Zycad
3499 Lexington Avenue North
P.O. Box 12828
St. Paul, Minnesota 55112
612-631-3175
800-631-5040

Sales Office & Representatives

CA	**Calabasas** Zycad, 818-346-0700

Zycad (Cont)

CA **Los Angeles**
Zycad, 213-216-7790
CA **Newport Beach**
Zycad, 714-476-5050
CA **Santa Clara**
Zycad, 408-988-0202
CO **Denver**
Zycad, 303-756-9012
CT **Stamford**
Zycad, 203-359-3078
GA **Atlanta**
Zycad, 404-381-2728
IL **Chicago**
Zycad, 312-303-0081
MA **Burlington**
Zycad, 617-229-6100
NJ **Morristown**
Zycad, 201-538-7833
TX **Austin**
Echeleon III, 512-346-7531
TX **Dallas**
Zycad, 214-458-1456
WA **Seattle**
, 206-451-7373
Intl **Australia, New South Wales**
Techway, TEL: 011/612/929-4988
Intl **England, London**
Zycad, TEL: 011/44/4867-89338
Intl **Japan, Tokyo**
Marubeni, TEL: 011/813/989-7781
Intl **West Germany, Duesseldorf**
Zycad, TEL: 011/49/211-434825

ZyMOS

ZyMOS Inc.
477 N. Mathilda Ave.
Sunnyvale, California 94086
408-730-5400

Sales Office & Representatives

Intl **Australia, Burwood, Victoria**
R & D Electronics, TEL: 011-61-3-288-8232
Intl **Israel, Givatayim**
EIM International, TEL: 011-972-3-774-041
Intl **Sweden, Taby**
Custom Design A.B., TEL: 011-46-8-768-0660
Intl **Switzerland, Lerchenhalde**
Amera Electronics A.G., TEL: 011-41-1-571112
Intl **Welwyn Gardens City, Hertfordshire, United Kingdom**
Chiptech, Ltd., TEL: 011-44-7073-32148
Intl **West Germany**
Neutron Mikroelektronic, TEL: 011-49069-865003

Zytrex

Zytrex Corporation
750 East Arques Avenue
Sunnyvale, California 94086
408-733-3973

IS THIS A BORROWED COPY?

Avoid the hassle and order your own personal two-volume set of IC MASTER. It's the surest way to simplify your IC selection efforts.

Only IC MASTER allows you to examine and compare the specifications, relative strengths, and weaknesses of all devices in serious contention for your application. And only IC MASTER brings you actual manufacturers' data sheets, allowing you to make complete and definitive device selections.

You can order IC MASTER simply by charging it to your VISA or Master Card credit card. To place your order (USA only) call now: (408) 249-6800/(516) 227-1300. To order outside the USA, see list of authorized IC MASTER distributors on page 1471 of Vol. I.

ADVERTISERS PRODUCT INDEX

This index covers those manufacturers who have included data pages in the IC Master. It shows the page and the line on that page of every device for which data is included in the Master Selection Guide. It is organized alphabetically by manufacturer and for each manufacturer, alphanumerically by device. Bold face listings lead to data on important products. This data has been supplied for you by the manufacturers.

HOW TO USE THE PRODUCT INDEX

The Product Index includes many of the same references as the Part Number Index, but in this case the listings are sorted by manufacturer.

As in the Part Number Index, the model numbers are sorted alphanumerically from **left** to **right**. Here the manufacturer's prefixes are included so that devices without alphabetic prefixes appear before those with them (i.e., 1101 would be before LM1101). Application note pages are indicated by a ¶ sign and manufacturer's product information pages by a ★ sign. The numbers preceding the dash are the page numbers, while those following the dash indicate the location of the device on the page.

When you use the IC Master to find data on a particular manufacturer's products, this index provides the fastest way to find all the information.

PRODUKTVERZEICHNIS VON HERSTELLERN MIT EIGENEN DATENBLÄTTERN

Dieses Verzeichnis enthält die Seiten- und Zeilenangabe für jedes Produkt im Master Selection Guide, für das Hersteller ausführliche Produktinformationen übermittelt haben. Es ist alphabetisch nach Herstellern geordnet und, innerhalb jedes Herstellers, alphanumerisch nach Bauteilen. Eintragungen in Fettdruck verweisen auf Datenblätter wichtiger Produkte, die direkt vom Hersteller zur Verfügung gestellt wurden.

GEBRAUCHSANLEITUNG FÜR DAS PRODUKTVERZEICHNIS

Dieses Verzeichnis enthält viele gleichlautende Informationen wie im numerischen Typenverzeichnis, jedoch erfolgt hier die Auflistung nach Herstellern.

Wie beim Typennummern-Verzeichnis erscheinen die Bauteile in alphanumerischer Reihenfolge von links nach rechts. Die Kennbuchstaben der Hersteller sind jedoch mit enthalten, so daβ Bauteile mit Buchstaben vor solchen ohne Buchstaben erscheinen (LM101 erscheint z.B. vor 1101). Die Seitennummern der Applikationsberichte sind durch ein ¶ Zeichen und Datenblätter von Herstellern durch ein ★ Zeichen angegeben. Die dem Trennstrich vorgestellten Zahlen sind die Seitenzahlen, die nachgestellten bedeuten die Zeile, in der das Bauteil auf der Seite zu finden ist.

Wenn Sie den Master benützen, um Kenndaten eines Produkts von einem bestimmten Hersteller zu finden, so geht es über dieses Verzeichnis am schnellsten.

INDEX DES PRODUITS FABRIQUES PAR LES SOCIETES AYANT PARTICIPE A LA COMPILATION DE CET OUVRAGE

Cet index indique à quelle page et à quelle ligne on a fait mention d'appareils fabriqués per les sociétés qui ont bein voulu inclure dans le Guide Général de Sélection des renseignements détaillés sur leurs produits.

Les fabricants sont énumérés par ordre alphabétique, et sous chaque nom se trouve une liste alphanumérique des produits. Les titres en caractères gras vous indiquent où trouver des renseignements sur des produits d'une certaine importance. Ces informations ont été fournies par les fabricants eux-mêmes pour votre usage personnel.

COMMENT SE SERVIR DE L'INDEX DES PRODUITS

Cet index comprend beaucoup de références apparaissant déja dans l'Index des Numéros de Pièces, il se singularise cependant par le fait que les renseignements sont donnés par fabricant.

Tout comme dans l'Index des Numéros de Pièces, les numéros de modéle sont classés alphanumériquement de gauche à droit. Dans ce cas là, les préfixes des sociétés fabricantes sont inclus de facon à ce que les produits avec préfixes alphabétiques apparaissent avant ceux qui n'en ont pas (par exemple LM101 se trouvera placé avant 1101). Pour renvoi, les numéros de page des notices d'application sont indiqués per le symbole (¶), et les numeros de page contenant les renseignements fournis par les fabricants par une étoile (★). Les chiffres qui précèdent le titre sont les numéros de page, ceux qui suivent le titre indiquent à quelle ligne il a été fait mention du produit.

Lorsque vous utilisez le Guide pour trouver des renseignements sur les produits d'un fabricant donné, cet Index représente le moyen le plus rapide pour obtenir les renseignements nécessaires.

INDICE DEL PRODUCTO DE LOS PUBLICADORES

Este indice denota la linea y página de cada componente en la Guia Maestra de Selección para fabricantes que han incluido información detallada del producto. Está organizada en orden alfabético por fabricante, y para cada fabricante la pieza aparece en orden alfabético y numérico. Las letras más marcadas los conduce a datos de productos importantes suplidos por el fabricante.

MODO DE EMPLEO DEL ÍNDICE DEL PRODUCTO

El índice del Producto incluye muchas de las mismas referencias incluidas en el Indice del Número de Pieza, pero en este caso, la lista está ordenada por fabricante.

Así como en el Indice de Número de Pieza, los números de modelos están en orden alfabético y numérico de izquierda a derecha. Los prefijos del fabricante están includíos de tal manera que las partes con prefijos alfabéticos aparecen antes que las que no lo tienen. (Por ejemplo, LM101 estaría encima de 1101). Páginas con notas de Aplicaciones están identificadas por el símbolo ¶ y las páginas de información del producto del fabricante por el símbolo ★. Los números que preceden al guión son el número de página, mientras que los que aparacen a continuación indican la ubicación de la pieza en la página.
Cuando usa la guía Maestra para encontrar datos sobre un producto en particular, este índice provee la manera más rápida de encontrar la información deseada.

広告掲載メーカー製品インデックス

このインデックスは各マスターセレクションガイドに記載されている詳細な製品情報をのせたメーカー全ての製品のページ数とそのページの行数を示しています。メーカーはＡＢＣ順に，製品はＡＢＣ順と若い数字順にのっています。太字で記載されている製品はメーカーがのせている主要機器のデーターがそこにのっていることを示しています。

使用法

製品のインデックスはパーツナンバーインデックスと同じですがここではメーカー毎に分類されています。パーツナンバーインデックス同様型番はＡＢＣ，若い数字順に左から右へ記載されています。ここではメーカーのプリフィックスがつけられており，アルファベットのプリフィックスが付いている製品がついていない製品の前になっています。（例えば**ＬＭ１０１**は**１１０１**より前に）アプリケーションノートページは　印で又メーカーの製品情報のページは★印で示してあります。ダッシュ符号の前の数字はページ数，後の数字はそのページの製品の位置を意味します。

利用者皆様が特定メーカーの製品のデータを探される場合，このインデックスが一番速く情報を提供致します。

American Automation

Device	Page-Line
EZ-PRO 2.1	★ **1901**
	1811-1

American Computer Automated Systems

Device	Page-Line
LIBSIM	4959-2
LIBSIM	5039-1
LIBSIM	★ **5101**

Analog Devices

Device	Page-Line
171	★ **3507**
1S14	3403-83
1S20	3403-84
1S24	3403-85
1S40	3403-86
1S44	3403-87
1S60	3403-88
	¶ 392-5
1S61	3403-89
1S64	3403-90
	¶ 394-8
1S74	3403-91
	¶ 389-14
	¶ 394-8
234	★ **3507**
235	★ **3507**
2S20	3403-92
52	★ **3507**
536A	¶ 391-17
580	¶ 391-17
636	¶ 390-12
636	¶ 391-18
636	¶ 392-1
637	¶ 390-12
637	¶ 391-18
637	¶ 392-1
741	¶ 391-17
A9001	844-2
AD-OP37B	3338-16
AD0042C	3357-147
AD101 Series	★ **3507**
AD101A	3330-14
AD101A	3346-107
AD111	3312-40
AD1403	★ **3136**
	3402-37
AD1403A	★ **3136**
	3402-38
AD1408-7	2854-39
AD1408-8	2852-46
AD1408-9	2851-29
AD1508-8	2852-47
AD1508-9	2851-30
AD201A	3346-108
AD2020	2846-14
AD2036	¶ 390-15
AD208	3346-49
AD208A	3342-29
AD211	3312-41
AD2700J	★ **3136**
	3402-166
AD2700L	★ **3136**
	3402-167
AD2700S	★ **3136**
	3402-168
AD2700U	★ **3136**
	3402-169
AD2701J	★ **3136**
	3402-170
AD2701L	★ **3136**
	3402-171
AD2701S	★ **3136**
	3402-172
AD2701U	★ **3136**
	3402-173
AD2702J	★ **3136**
	3403-69
AD2702L	★ **3136**
	3403-70
AD2702S	★ **3136**
	3403-71
AD2702U	★ **3136**
	3403-72
AD2710K	★ **3136**
	3402-174
AD2710L	★ **3136**
	3402-175
AD2712K	★ **3136**
	3403-73
AD2712L	★ **3136**
	3403-74
AD2720	3403-75
AD2720A	3402-176
AD2720C	3402-177
AD2720S	3402-178
AD2720T	3402-179
AD284	¶ 404-15
AD286	¶ 404-15
AD289	¶ 404-15
AD290A	¶ 404-15
AD292A	¶ 404-15
AD293	¶ 404-15
AD294A	¶ 404-15
AD295	3306-136
	¶ 404-15
AD301A	3356-19
AD301AL	3343-11
AD308	3356-4
AD308A	3342-51
AD311	3313-13
AD346	★ **3140**
	3403-152
AD3542J	3357-142
AD3554	★ **3508**
	3331-14
	3334-248
AD3554A	★ **3508**
	3348-93
	3330-109
	3345-51
AD3554B	★ **3508**
	3344-19
AD3554S	★ **3508**
	3348-94
	3331-15
	3330-110
	3334-249
	3344-20
AD362K	★ **3142**
	3399-40
AD362S	★ **3142**
	3399-41
AD363K	3399-5
AD363S	3399-6
AD364J	3399-7
AD364K	3399-8
AD364S	3399-9
AD364T	3399-10
AD365	★ **3141**
AD365	★ **3143**
	3306-48
AD369K	★ **3142**
	3399-42
AD369S	★ **3142**
	3399-43
AD371J	2865-52
AD371K	2867-37
AD371S	2867-38
AD376J	★ **3116**
AD376J	★ **3131**
	2847-23
AD376K	★ **3116**
AD376K	★ **3131**
	2847-10
AD380J	★ **3508**
	3334-199
AD380K	★ **3508**
	3334-200
	3344-40
AD380L	★ **3508**
	3334-201
	3344-41
AD380S	★ **3508**
	3348-109
	3360-8
	3330-125
	3331-49
	3334-202
	3344-42
AD381J	★ **3508**
	3344-18
AD381K	★ **3508**
	3342-7
AD381L	★ **3508**
	3340-63
AD381S	★ **3508**
	3344-10
AD382J	★ **3508**
	3344-17
AD382K	★ **3508**
	3342-6
AD382S	★ **3508**
	3348-110
	3330-126
	3344-9
AD3860K	2865-24
AD3860S	2865-25
AD389	★ **3139**
	3404-165
AD390J	★ **3102**
AD390J	★ **3111**
	2866-8
AD390K	★ **3102**
AD390K	★ **3111**
	2865-27
AD390S	★ **3102**
AD390S	★ **3111**
	2866-9
AD390T	★ **3102**
AD390T	★ **3111**
	2866-10
AD394	★ **3103**
AD394	★ **3111**
AD395	★ **3103**
AD395	★ **3111**
AD50	★ **3508**
AD5010K	2832-14
AD503J	★ **3507**
	3357-173
AD503K	★ **3507**
	3357-150
AD503S	★ **3507**
	3357-151
AD504J	★ **3507**
	3346-152
AD504K	★ **3507**
	3345-21
AD504L	★ **3507**
	3341-46
	3343-24
AD504M	★ **3507**
	3332-23
	3343-23
AD504S	★ **3507**
	3341-47
	3343-25
AD506J	★ **3507**
	3350-5
AD506K	★ **3507**
	3345-15
AD506L	★ **3507**
	3343-49
AD506S	★ **3507**
	3345-16
AD507J	★ **3508**
	3355-2
AD507K	★ **3508**
	3346-208
AD507S	★ **3508**
	3350-15
AD509J	★ **3508**
	3357-58
AD509K	★ **3508**
	3331-53
	3356-45
AD509S	★ **3508**
	3331-54
	3356-46
AD51	★ **3508**
AD510J	★ **3507**
	3339-7
AD510K	★ **3507**
	3341-43
	3337-42
AD510L	★ **3507**
	3332-24
	3341-7
	3335-46
AD510S	★ **3507**
	3341-44
	3337-43
AD515J	★ **3507**
	3332-17
	3346-155
AD515K	★ **3507**
	3332-9
	3343-44
AD515L	★ **3507**
	3332-4
	3343-43
AD517J	★ **3507**
	3340-15
AD517K	★ **3507**
	3341-48
	3337-36
AD517L	★ **3507**
	3332-25
	3335-32
AD517S	★ **3507**
	3341-49
	3337-37
AD518J	★ **3508**
	3355-51
AD518K	★ **3508**
	3350-21
AD518S	★ **3508**
	3350-22
AD5201B	2842-12
AD5201T	2842-13
AD5202B	2842-14
AD5202T	2842-15
AD5204B	2845-11
AD5204T	2842-16
AD5205B	2842-17
AD5205T	2842-18
AD5211B	2841-21
AD5211T	2841-22
AD5212B	2841-23
AD5212T	2841-24
AD5214B	2841-25
AD5214T	2841-26
AD5215B	2841-27
AD5215T	2841-28
AD521J	3306-86
AD521K	3306-87
AD521L	3306-88
AD521S	3306-89
AD522	¶ 404-7
AD522A	3306-79
AD522A	3340-78
AD522B	3306-80
AD522B	3340-40
AD522S	3306-81
AD522S	3340-41
AD5240K	2840-1
AD5240S	2840-2
AD5240ZK	2840-3
AD5240ZS	2840-4
AD524A	★ **3509**
	3340-64
AD524B	★ **3509**
	3339-4
AD524C	★ **3509**
	3337-45
AD524S	★ **3509**
	3339-13
AD530	¶ 422-14
AD531	¶ 422-14
AD532	¶ 422-14
AD532J	★ **3516**
	3400-140
AD532K	★ **3516**
	3400-141
AD532S	★ **3516**
	3400-142
AD533	¶ 422-14
AD533J	3400-143
AD533K	3400-144
AD533L	3400-145
AD533S	3400-146
AD534	¶ 391-17
AD534	¶ 422-14
AD534J	★ **3516**
AD534J	★ **3518**
	3400-147
AD534K	★ **3516**
AD534K	★ **3518**
	3400-148
AD534L	★ **3516**
AD534L	★ **3518**
	3400-149
AD534S	★ **3516**
AD534S	★ **3518**
	3400-150
AD534T	★ **3516**
AD534T	★ **3518**
	3400-151
AD535J	3399-71
AD535K	3399-72
AD536	¶ 390-12
AD536	¶ 422-14
AD536A	¶ 391-18
AD536A	¶ 392-1
AD536AJ	★ **3517**
AD536AJ	★ **3521**
	3403-138
AD536AK	★ **3517**
AD536AK	★ **3521**
	3403-139
AD536AS	★ **3517**
AD536AS	★ **3521**
	3403-140
AD537	¶ 387-9
AD537J	3405-58
AD537K	3405-59
AD537S	3405-60
AD538	★ **3516**
AD538	★ **3519**
AD539J	★ **3516**
AD539J	★ **3520**
	3400-119
AD539K	★ **3516**
AD539K	★ **3520**
	3400-120
AD539S	★ **3516**
AD539S	★ **3520**
	3400-121
AD542	¶ 406-14
AD542J	★ **3507**
	3345-31
AD542K	★ **3507**
	3344-13
AD542L	★ **3507**
	3342-8
AD542S	★ **3507**
	3344-12
AD544	¶ 406-14
AD544J	★ **3507**
	3345-33
AD544K	★ **3507**
	3344-8
AD544L	★ **3507**
	3342-5
AD544S	★ **3507**
	3344-11
AD545J	★ **3507**
	3343-48
AD545K	★ **3507**
	3332-34
	3343-47
AD545L	★ **3507**
	3332-35
	3350-57
AD545M	★ **3507**
	3332-36
	3340-50
AD547J	★ **3502**
AD547J	★ **3507**
	3344-16
AD547K	★ **3502**
AD547K	★ **3507**
	3342-3
AD547L	★ **3502**
AD547L	★ **3507**
	3341-50
	3340-58
AD547S	★ **3502**
AD547S	★ **3507**
	3342-4
AD558	¶ 387-1
AD558	¶ 390-16
AD558J	★ **3104**
AD558J	★ **3109**
	2853-25
AD558K	★ **3104**
AD558K	★ **3109**
	2851-34
AD558S	★ **3104**
AD558S	★ **3109**
	2854-3
AD558T	★ **3104**
AD558T	★ **3109**
	2851-39
AD561J	2860-6
AD561K	2856-24
AD561S	2860-7
AD561T	2856-25
AD562A/BCD	★ **3108**
	2865-6
AD562A/BIN	★ **3108**
	2865-7
AD562K/BCD	★ **3108**
	2870-11
AD562K/BIN	★ **3108**
	2864-16
AD562S/BCD	★ **3108**
	2870-12
AD562S/BIN	★ **3108**
	2861-14
AD563J/BCD	★ **3108**
	2870-13
AD563J/BIN	★ **3108**
	2864-17
AD563K/BCD	★ **3108**
	2870-14
AD563K/BIN	★ **3108**
	2861-15
AD563S/BCD	★ **3108**
	2870-15
AD563S/BIN	★ **3108**
	2861-16
AD563T/BCD	★ **3108**
	2870-16
AD563T/BIN	★ **3108**
	2861-17
AD565AJ	★ **3108**
	2861-51
AD565AK	★ **3108**
	2859-79
AD565AS	★ **3108**
	2861-52
AD565AT	★ **3108**
	2859-80
AD565J	★ **3108**
	2862-45
AD565K	★ **3108**
	2859-98
AD565S	★ **3108**
	2862-46
AD565T	★ **3108**
	2859-99
AD566AJ	★ **3108**
	2862-35
AD566AK	★ **3108**
	2859-90
AD566AS	★ **3108**
	2862-36
AD566AT	★ **3108**
	2859-91
AD566J	★ **3108**
	2862-37
AD566K	★ **3108**
	2859-92
AD566S	★ **3108**
	2862-38
AD566T	★ **3108**
	2859-93
AD567J	2863-6
AD567K	2861-6
AD567S	2863-7
AD569J	★ **3113**
	2873-7
AD569K	★ **3113**
	2873-8
AD570J	2835-5
AD570S	2835-6
AD571J	★ **3126**
	2839-9
AD571K	★ **3126**
	2838-41
AD571S	★ **3126**
	2839-10
AD572A	2841-42
AD572B	2841-43
AD572S	2841-44
AD573J	★ **3117**
AD573J	★ **3127**
	2839-4
AD573K	★ **3117**
AD573K	★ **3127**
	2838-33
AD573S	★ **3117**
AD573S	★ **3127**
	2838-34
AD574AJ	★ **3118**
AD574AJ	★ **3129**
	2844-41
AD574AK	★ **3118**
AD574AK	★ **3129**
	2841-37
AD574AS	★ **3118**
AD574AS	★ **3129**
	2844-42

Arranged alphanumerically from left to right.

ADVERTISERS' PRODUCT INDEX

Analog Devices (Cont'd)

Device	Page-Line
AD574AT	★ 3118
AD574AT	★ 3129
	2841-47
AD574J	★ 3118
AD574J	★ 3129
	2844-49
AD574K	★ 3118
AD574K	★ 3129
	2841-48
AD574L	★ 3118
AD574L	★ 3129
	2841-49
AD574S	★ 3118
AD574S	★ 3129
	2841-50
AD574T	★ 3118
AD574T	★ 3129
	2841-51
AD574U	★ 3118
AD574U	★ 3129
	2841-52
AD574ZJ	★ 3118
AD574ZJ	★ 3129
	2845-7
AD574ZK	★ 3118
AD574ZK	★ 3129
	2845-8
AD574ZL	★ 3118
AD574ZL	★ 3129
	2842-3
AD574ZS	★ 3118
AD574ZS	★ 3129
	2842-4
AD574ZT	★ 3118
AD574ZT	★ 3129
	2842-5
AD574ZU	★ 3118
AD574ZU	★ 3129
	2842-6
AD575J	★ 3119
AD575J	★ 3127
	2839-7
AD575K	★ 3119
AD575K	★ 3127
	2838-53
AD575S	★ 3119
AD575S	★ 3127
	2839-8
AD578J	2840-8
AD578K	2839-53
AD578L	2839-47
AD579B	2838-16
AD579J	2838-19
AD579K	2838-17
AD579T	2838-18
AD580J	★ 3136
	3402-39
AD580K	★ 3136
	3402-40
AD580L	★ 3136
	3402-41
AD580S	★ 3136
	3402-42
AD580T	★ 3136
	3402-43
AD580U	★ 3136
	3402-44
AD581J	★ 3136
	3402-180
AD581K	★ 3136
	3402-181
AD581L	★ 3136
	3402-182
AD581S	★ 3136
	3402-183
AD581T	★ 3136
	3402-184
AD581U	★ 3136
	3402-185
AD582K	★ 3140
	3403-153
AD582S	★ 3140
	3403-154
AD583K	3403-155
AD583S	3403-156
AD584J	★ 3135
	3402-80
AD584K	★ 3135
	3402-81

Device	Page-Line
AD584L	★ 3135
	3402-82
AD584S	★ 3135
	3402-83
AD584T	★ 3135
	3402-84
AD584U	★ 3135
	3402-85
AD585J	★ 3137
AD585J	★ 3140
	3403-157
AD585S	★ 3137
AD585S	★ 3140
	3403-158
AD589	¶ 427-14
AD589J	★ 3136
	3402-15
AD589K	★ 3136
	3402-16
AD589L	★ 3136
	3402-17
AD589M	★ 3136
	3402-18
AD589S	★ 3136
	3402-19
AD589T	★ 3136
	3402-20
AD589U	★ 3136
	3402-21
AD590	¶ 429-4
AD590I	★ 3512
	3404-126
AD590J	★ 3512
	3404-127
AD590K	★ 3512
	3404-128
AD590L	★ 3512
	3404-129
AD590M	★ 3512
	3404-130
AD592	★ 3512
	3404-131
AD594A	★ 3512
AD594A	★ 3514
	3307-132
AD594C	★ 3512
AD594C	★ 3514
	3307-133
AD595A	★ 3512
AD595A	★ 3514
	3307-134
AD595C	★ 3512
AD595C	★ 3514
	3307-135
AD596	★ 3512
AD596	★ 3515
	3404-125
AD597	★ 3512
AD597	★ 3515
AD6020K	2832-15
AD611K	★ 3503
AD611K	★ 3507
	3340-100
AD624A	★ 3510
	3306-124
	3340-65
AD624B	★ 3510
	3306-125
	3339-10
AD624C	★ 3510
	3306-126
	3337-46
AD624S	★ 3510
	3306-127
	3339-50
AD625	★ 3511
	3306-90
AD630	★ 3517
AD630	★ 3523
	3398-73
AD632	3400-122
AD636J	3403-141
AD636K	3403-142
AD637J	★ 3517
AD637J	★ 3522
	3403-143
AD637K	★ 3517
AD637K	★ 3522
	3403-144
AD639A	★ 3517
AD639A	★ 3524
	3405-17

Device	Page-Line
AD639B	★ 3517
AD639B	★ 3524
	3405-18
AD639S	★ 3517
AD639S	★ 3524
	3405-19
AD642J	★ 3507
	3362-46
AD642K	★ 3507
	3362-15
AD642L	★ 3507
	3361-29
AD642S	★ 3507
	3362-16
AD644J	★ 3507
	3362-47
AD644K	★ 3507
	3362-17
AD644L	★ 3507
	3361-28
AD644S	★ 3507
	3361-30
AD647J	★ 3502
AD647J	★ 3507
	3362-20
AD647K	★ 3502
AD647K	★ 3507
	3361-25
AD647L	★ 3502
AD647L	★ 3507
	3361-13
AD647S	★ 3502
AD647S	★ 3507
	3361-26
AD647S/883B	★ 3502
AD647S/883B	★ 3507
	3361-27
AD650J	★ 3132
AD650J	★ 3134
	3405-89
AD650K	★ 3132
AD650K	★ 3134
	3405-90
AD650S	★ 3132
AD650S	★ 3134
	3405-91
AD651J	★ 3134
	3405-61
AD651K	★ 3134
	3405-62
AD651S	★ 3134
	3405-63
AD654	★ 3133
	3405-64
	¶ 391-12
AD667	¶ 389-15
AD667J	★ 3105
AD667J	★ 3112
	2861-30
AD667K	★ 3105
AD667K	★ 3112
	2859-78
AD667S	★ 3105
AD667S	★ 3112
	2861-31
AD670A	★ 3120
AD670A	★ 3124
	2836-12
AD670B	★ 3120
AD670B	★ 3124
	2836-20
AD670J	★ 3120
AD670J	★ 3124
	2836-13
AD670K	★ 3120
AD670K	★ 3124
	2836-21
AD670S	★ 3120
AD670S	★ 3124
	2836-14
AD673J	★ 3124
	2834-45
AD673S	★ 3124
	2834-46
AD7100 Series	¶ 393-17
AD7100 Series	¶ 393-18
AD7110K	3316-111
AD7111K	3316-105
AD7111L	3316-106
AD7111T	3316-107
AD7111U	3316-108
AD7115K	3316-104

Device	Page-Line
AD7118K	3316-112
AD7118L	3316-113
AD7118T	3316-109
AD7118U	3316-110
AD7224	¶ 386-14
AD7224B	★ 3109
	2855-5
AD7224C	★ 3109
	2854-49
AD7224K	★ 3109
	2855-6
AD7224L	★ 3109
	2854-50
AD7225K	★ 3109
	2854-51
AD7225L	★ 3109
	2853-40
AD7226	¶ 393-14
AD7226B	★ 3110
	2855-21
AD7226K	★ 3110
	2855-22
AD7226T	★ 3110
	2855-23
AD7240J	2868-11
AD7240K	2867-39
AD7240S	2868-12
AD7240T	2867-40
AD741	★ 3507
	3330-21
	3353-41
AD741C	★ 3507
	3355-25
AD741J	★ 3507
	3346-220
AD741K	★ 3507
	3346-120
AD741L	★ 3507
	3343-18
AD741S	★ 3507
	3346-106
AD7500 Series	¶ 388-2
AD7501	¶ 401-9
AD7501J	★ 3145
	2830-146
AD7501K	★ 3145
	2830-147
AD7501S	★ 3145
	2830-148
AD7502J	★ 3145
	2830-42
AD7502K	★ 3145
	2830-43
AD7502S	★ 3145
	2830-44
AD7503	¶ 401-9
AD7503J	★ 3145
	2830-149
AD7503K	★ 3145
	2830-150
AD7503S	★ 3145
	2830-151
AD7506	¶ 401-9
AD7506J	★ 3145
	2831-80
AD7506K	★ 3145
	2831-81
AD7506S	★ 3145
	2831-72
AD7506T	★ 3145
	2831-73
AD7507	¶ 401-9
AD7507J	★ 3145
	2831-18
AD7507K	★ 3145
	2831-19
AD7507S	★ 3145
	2831-8
AD7507T	★ 3145
	2831-9
AD7510	¶ 401-9
AD7510DIJ	★ 3144
	2823-68
AD7510DIK	★ 3144
	2823-69
AD7510DIS	★ 3144
	2823-70
AD7511	¶ 401-9
AD7511DIJ	★ 3144
	2823-71
AD7511DIK	★ 3144
	2823-72

Device	Page-Line
AD7511DIS	★ 3144
	2823-73
AD7511DIT	★ 3144
	2823-74
AD7512DIJ	★ 3144
	2825-100
AD7512DIK	★ 3144
	2825-101
AD7512DIS	★ 3144
	2825-102
AD7512DIT	★ 3144
	2825-103
AD7513	¶ 401-9
AD7516	¶ 401-9
AD7519	¶ 401-9
AD7510DI	¶ 403-3
AD7520	¶ 388-3
AD7520	¶ 393-11
AD7520J	2859-17
AD7520K	2858-31
AD7520L	2860-14
AD7520S	2859-18
AD7520T	2858-32
AD7520U	2860-15
AD7521	¶ 388-3
AD7521	¶ 393-11
AD7521J	2869-23
AD7521K	2869-10
AD7521L	2868-27
AD7521S	2869-24
AD7521T	2869-11
AD7521U	2868-28
AD7522	¶ 388-3
AD7522	¶ 393-11
AD7522J	2859-32
AD7522K	2858-45
AD7522L	2857-11
AD7522S	2859-33
AD7522T	2858-46
AD7522U	2857-12
AD7523	¶ 388-3
AD7523J	2852-18
AD7523K	2851-12
AD7523L	2850-22
AD7523S	2852-19
AD7524	¶ 388-3
AD7524	¶ 393-10
AD7524	¶ 393-11
AD7524A	2852-30
AD7524B	2851-20
AD7524C	2850-25
AD7524J	2852-31
AD7524K	2851-21
AD7524L	2850-26
AD7524S	2852-32
AD7524T	2851-22
AD7524U	2850-27
AD7525	¶ 393-11
AD7525K	3398-69
AD7525K	3401-82
AD7525L	3401-83
AD7525T	3398-70
AD7525T	3401-84
AD7525U	3401-85
AD7527	¶ 390-5
AD7527	¶ 390-6
AD7528	¶ 388-1
AD7528	¶ 393-10
AD7528A	★ 3110
	2855-17
AD7528B	★ 3110
	2855-14
AD7528C	★ 3110
	2855-15
AD7528J	★ 3110
	2855-18
AD7528K	★ 3110
	2855-16
AD7528L	★ 3110
	2855-11
AD7528S	★ 3110
	2855-19
AD7528T	★ 3110
	2855-12
AD7528U	★ 3110
	2855-13
AD7530	¶ 388-3
AD7530	¶ 393-11
AD7530J	2859-19
AD7530K	2858-33
AD7530L	2860-16

Device	Page-Line
AD7531	¶ 388-3
AD7531	¶ 393-11
AD7531J	2869-25
AD7531K	2869-12
AD7533	¶ 388-3
AD7533	¶ 393-10
AD7533	¶ 393-11
AD7533A	2859-34
AD7533B	2859-1
AD7533C	2857-13
AD7533J	2859-35
AD7533K	2859-2
AD7533L	2857-14
AD7533S	2859-36
AD7533T	2859-3
AD7533U	2857-15
AD7534A	★ 3114
	2871-1
AD7534B	★ 3114
	2870-42
AD7534J	★ 3114
	2871-2
AD7534K	★ 3114
	2870-43
AD7534S	★ 3114
	2871-3
AD7534T	★ 3114
	2870-44
AD7535A	★ 3114
	2871-4
AD7535B	★ 3114
	2870-45
AD7535J	★ 3114
	2871-5
AD7535K	★ 3114
	2870-46
AD7535S	★ 3114
	2871-6
AD7535T	★ 3114
	2870-47
AD7536J	★ 3114
	2871-7
AD7536K	★ 3114
	2870-48
AD7536S	★ 3114
	2871-8
AD7536T	★ 3114
	2870-49
AD7541	¶ 393-11
AD7541A	2866-29
AD7541B	2863-18
AD7541J	2866-30
AD7541K	2863-19
AD7541S	2867-1
AD7541T	2863-20
AD7542	¶ 390-5
AD7542	¶ 390-6
AD7542	¶ 392-8
AD7542	¶ 395-15
AD7542A	2867-24
AD7542B	2864-22
AD7542J	2867-25
AD7542K	2864-23
AD7542S	2867-26
AD7542T	2864-24
AD7543A	2867-27
AD7543B	2864-25
AD7543J	2867-28
AD7543K	2864-26
AD7544	¶ 391-3
AD7545	¶ 388-1
AD7545	¶ 393-10
AD7545A	★ 3112
	2868-13
AD7545B	★ 3112
	2866-21
AD7545C	★ 3112
	2861-24
AD7545GC	★ 3112
	2861-25
AD7545GL	★ 3112
	2861-26
AD7545GU	★ 3112
	2861-27
AD7545J	★ 3112
	2868-14
AD7545K	★ 3112
	2866-22
AD7545L	★ 3112
	2861-28
AD7545S	★ 3112
	2868-15

¶ Indicates page number in Application Note Directory.
★ Indicates additional data is provided on the page noted.

Analog Devices (Cont'd)

Device	Page-Line
AD7545T	★ 3112 2866-23
AD7545U	★ 3112 2861-29
AD7546A	2871-39
AD7546B	2871-29
AD7546J	2871-40
AD7546K	2871-30
AD7548	¶ 388-1
AD7548J	★ 3112 2854-46
AD7548K	★ 3112 2853-23
AD7548S	★ 3112 2854-47
AD7548T	★ 3112 2853-24
AD7549J	★ 3111 2867-23
AD7549K	★ 3111 2864-9
AD7550B	2846-18
AD7552	2845-43
AD7560	3399-61
AD7571J	★ 3128 2839-21
AD7571K	★ 3128 2839-19
AD7571S	★ 3128 2839-22
AD7571T	★ 3128 2839-20
AD7572J	★ 3129 2844-16
AD7572K	★ 3129 2839-54
AD7572S	★ 3129 2844-17
AD7572T	★ 3129 2839-55
AD7573J	2839-15
AD7573K	2838-43
AD7573S	2839-16
AD7573T	2838-44
AD7574	¶ 393-6
AD7574	¶ 393-7
AD7574A	2835-49
AD7574B	2834-38
AD7574J	2835-50
AD7574K	2834-39
AD7574S	2835-51
AD7574T	2834-40
AD7575J	★ 3125 2836-38
AD7575K	★ 3125 2834-24
AD7576A	★ 3126 2837-28
AD7576B	★ 3126 2836-42
AD7576J	★ 3126 2837-29
AD7576K	★ 3126 2836-43
AD7576S	★ 3126 2836-44 2837-30
AD7578K	★ 3130 2845-12
AD7578T	★ 3130 2845-13
AD7581A	3399-17
AD7581A	1457-131
AD7581A	1457-308
AD7581A	1460-101
AD7581B	3399-18
AD7581B	1457-132
AD7581B	1457-309
AD7581B	1460-102
AD7581C	3399-19
AD7581C	1457-133
AD7581C	1457-310
AD7581C	1460-103
AD7581J	3399-20
AD7581J	1457-134
AD7581J	1457-311
AD7581J	1460-104
AD7581K	2836-3
AD7581K	3399-21
AD7581K	1457-135
AD7581K	1457-312
AD7581K	1460-105
AD7581L	3399-22
AD7581L	1457-136
AD7581L	1457-313
AD7581L	1460-106
AD7582B	★ 3130 2839-26
AD7582K	★ 3130 2839-27
AD7582T	★ 3130 2839-28
AD7590DIB	2823-59
AD7590DIK	2823-60
AD7591DIB	2823-61
AD7591DIK	2823-62
AD7592DIB	2822-83
AD7592DIK	2822-84
AD7590DI	¶ 403-3
AD7820K	★ 3126 2836-34
AD7820L	★ 3126 2836-10
AD7820T	★ 3126 2836-35
AD7820U	★ 3126 2836-11
AD7824K	★ 3125 2836-30
AD7824T	★ 3125 2836-31
AD7828K	★ 3125 2836-32
AD7828T	★ 3125 2836-33
AD8581B	1460-107
AD8581L	2835-9
AD9000J	★ 3121 2832-12
AD9000S	★ 3121 2832-13
AD9685	3312-59
AD9687	3312-60
AD9700	★ 3106 844-14
AD9700B	★ 3106 2850-15
AD9700S	★ 3106 2850-16
AD9768	844-12
AD9768	2850-14
ADADC71J	2847-13
ADADC71K	2847-1
ADADC72J	2847-14
ADADC72K	2847-2
ADADC80-12	2841-40
ADADC80-15	2838-39
ADADC80Z-10	2838-40
ADADC80Z-12	2841-41
ADADC816	2838-51
ADADC84-10	2839-2
ADADC84-12	2840-20
ADADC85-10	2838-30
ADADC85-12	2840-31
ADDAC08	2852-10
ADDAC08A	2850-47
ADDAC08C	2854-31
ADDAC08E	2852-23
ADDAC08H	2850-48
ADDAC100J	2858-27
ADDAC100K	2858-11
ADDAC100L	2858-12
ADDAC100S	2858-28
ADDAC100T	2858-13
ADDAC71-COB-I	★ 3113
ADDAC71-COB-I	★ 3131 2872-5
ADDAC71-COB-V	★ 3113
ADDAC71-COB-V	★ 3131 2872-21
ADDAC71-CSB-I	★ 3113
ADDAC71-CSB-I	★ 3131 2872-6
ADDAC71-CSB-V	★ 3113
ADDAC71-CSB-V	★ 3131 2872-22
ADDAC72-COB-I	★ 3113
ADDAC72-COB-I	★ 3131 2872-7
ADDAC72-COB-V	★ 3113
ADDAC72-COB-V	★ 3131 2872-23
ADDAC72-CSB-I	★ 3113
ADDAC72-CSB-I	★ 3131 2872-8
ADDAC72-CSB-V	★ 3113
ADDAC72-CSB-V	★ 3131 2872-24
ADDAC80	¶ 386-12
ADDAC80/CBI	★ 3107 2862-27
ADDAC80/CCD	★ 3107 2869-43
ADDAC84	★ 3130
ADDAC85	¶ 386-13
ADDAC85/CBI	★ 3107
ADDAC85/CBI	★ 3130 2862-28
ADDAC85/CCD	★ 3107
ADDAC85/CCD	★ 3130 2869-44
ADDAC85C/CBI	★ 3107
ADDAC85C/CBI	★ 3130 2862-29
ADDAC85C/CCD	★ 3107
ADDAC85C/CCD	★ 3130 2869-45
ADDAC87/CBI	★ 3107 2862-25
ADG200A	2822-59
ADG200B	2822-76
ADG200C	2822-77
ADG201A	★ 3144 2823-57
ADG201B	★ 3144 2823-75
ADG201C	★ 3144 2823-76
ADG202	★ 3144
ADG221A	★ 3144 2823-42
ADG222A	★ 3144 2823-43
ADLH0032	★ 3508 3331-23 3334-238 3352-18
ADLH0032C	★ 3508 3331-24 3334-239 3357-125
ADLH0033	★ 3508 3329-3 3331-10
ADLH0033C	★ 3508 3329-12 3331-12
ADOP-07	★ 3504
ADOP-07	★ 3507 3332-13 3338-34
ADOP-07A	★ 3504
ADOP-07A	★ 3507 3335-35
ADOP-07C	★ 3504
ADOP-07C	★ 3507 3340-18
ADOP-07D	★ 3504
ADOP-07D	★ 3507 3340-22
ADOP-07E	★ 3504
ADOP-07E	★ 3507 3338-45
ADOP-27A	★ 3505
ADOP-27A	★ 3507 3337-10
ADOP-27B	★ 3505
ADOP-27B	★ 3507 3338-2
ADOP-27C	★ 3505
ADOP-27C	★ 3507 3339-23
ADOP-27E	★ 3505
ADOP-27E	★ 3507 3337-11
ADOP-27F	★ 3505
ADOP-27F	★ 3507 3338-3
ADOP-27G	★ 3505
ADOP-27G	★ 3507 3339-19
ADOP-37A	★ 3506 3337-4
ADOP-37C	★ 3506 3339-27
ADOP-37E	★ 3506 3337-5
ADOP-37F	★ 3506 3338-17
ADOP-37G	★ 3506 3339-28
ADSHC-85	★ 3139 3403-159
ADSHC-85E	3403-160
ADSP-1008	★ 1008 843-83
ADSP-1008AJ	★ 1008 807-153
ADSP-1008AK	★ 1008 807-154
ADSP-1008AS	★ 1008 807-155
ADSP-1008AT	★ 1008 807-156
ADSP-1009	843-86
ADSP-1009A	★ 1008
ADSP-1009AJ	807-71
ADSP-1009AK	807-72
ADSP-1009AS	807-73
ADSP-1009AT	807-74
ADSP-1010A	★ 1008
ADSP-1010AJ	808-1
ADSP-1010AK	808-2
ADSP-1010AS	808-3
ADSP-1010AT	808-4
ADSP-1012	★ 1007 843-51
ADSP-1012AJ	★ 1007 807-121
ADSP-1012AK	★ 1007 807-122
ADSP-1012AS	★ 1007 807-123
ADSP-1012AT	★ 1007 807-124
ADSP-1016	★ 1007 843-64
ADSP-1016AJ	★ 1007 807-135
ADSP-1016AK	★ 1007 807-136
ADSP-1016AS	★ 1007 807-137
ADSP-1016AT	★ 1007 807-138
ADSP-1024	★ 1007 843-80
ADSP-1024AJ	★ 1007 807-151
ADSP-1024AK	★ 1007 807-152
ADSP-1080	★ 1007 843-17
ADSP-1080AJ	★ 1007 807-111
ADSP-1080AK	★ 1007 807-112
ADSP-1080AS	★ 1007 807-113
ADSP-1080AT	★ 1007 807-114
ADSP-1081	★ 1007 843-18
ADSP-1081AJ	★ 1007 807-107
ADSP-1081AK	★ 1007 807-108
ADSP-1081AS	★ 1007 807-109
ADSP-1081AT	★ 1007 807-110
ADSP-1102	★ 1007
ADSP-1103	★ 1007
ADSP-1110	★ 1006 843-92
ADSP-1110A	★ 1006
ADSP-1110AJ	★ 1006 808-5
ADSP-1110AK	★ 1006 808-6
ADSP-1110AS	★ 1006 808-7
ADSP-1110AT	★ 1006 808-8
ADSP-1401	★ 1004
ADSP-1410J	★ 1005 806-75
ADSP-1410K	★ 1005 806-76
ADSP-1410S	★ 1005 806-77
ADSP-1410T	★ 1005 806-78
ADSP-1516	★ 1007
ADSP-1517	★ 1007
ADSP-3210J	★ 1002 807-85
ADSP-3210K	★ 1002 807-86
ADSP-3210S	★ 1002 807-87
ADSP-3210T	★ 1002 807-88
ADSP-3220J	★ 1003 806-151 808-52
ADSP-3220K	★ 1003 806-152 808-53
ADSP-3220S	★ 1003 806-153 808-54
ADSP-3220T	★ 1003 806-154 808-55
ADVFG32	3405-65
ADX346	3403-161
AS7523	¶ 393-11
ASDP-1010	843-93
DRC1765	3403-123
DRC1766	3403-124
HAS-0802	★ 3126 2833-44
HAS-1002	★ 3128 2838-13
HAS-1201K	★ 3122 2839-34
HAS-1201S	★ 3122 2839-35
HAS-1202	★ 3123 2839-46
HAS-1202A	★ 3123 2839-38
HAS-1409	★ 3131 2846-27
HDD-0810	2855-32
HDD-0810C	2855-34
HDD-0810CM	2855-35
HDD-0810M	2855-33
HDD-1015	844-33
HDD-1015	2859-70
HDD-1015C	2859-71
HDD-1015M	2859-72
HDD-1206J	2864-30
HDD-1206S	2864-31
HDD-1409	2870-37
HDG	¶ 394-1
HDG-0405	★ 3115 843-141 ★ 3115 2849-14
HDG-0605	★ 3115 843-160 ★ 3115 2850-11
HDG-0805	★ 3115 844-24 ★ 3115 2855-39
HDG Series	★ 3115 ¶ 394-2
HDH-0802	2851-25
HDH-0802M	2851-26
HDH-1003	2856-26
HDH-1003M	2858-10
HDH-1205	2863-11
HDH-1205M	2863-12
HDS-060	3357-170
HDS-0810E	★ 3115 2850-36
HDS-0810EM	2850-37
HDS-0820	2851-37
HDS-0820M	2851-38
HDS-1015E	★ 3115 2858-1
HDS-1015EM	2858-2
HDS-1025	2856-22
HDS-1025M	2856-23
HDS-1240E	★ 3115 2866-3
HDS-1240EM	2866-4
HDS-1250	2861-33
HDS-1250M	2861-34
HOS-050	★ 3508 3331-35 3334-259
HOS-050A	★ 3508 3331-36
HOS-050C	★ 3508 3331-37 3334-260
HOS-060	★ 3508 3344-46
HOS-060/883	★ 3508 3344-47
HOS-060S	★ 3508 3330-111 3331-38 3334-261
HOS-100A	★ 3508 3329-46 3331-13
HOS-100AH	★ 3508 3306-44
HOS-100S	★ 3508 3329-47 3331-11
HOS-199SH	3306-45
HTC-0300	3403-162
HTC-0500	3403-163
HTS-0010	★ 3138 3404-166
HTS-0025	3403-164
ICL8069	¶ 427-14
LM113	¶ 427-14
LM313	¶ 427-14
MAH-0801	2832-11
MAH-1001	2833-12
MAS-1202	2838-4
MSC2S20	3403-93
RT-1242	2042-52
RTI	2040-4
RTI-1225	2040-1
RTI-1230	2033-57
RTI-1231	2034-8
RTI-1232	2034-5
RTI-1240	2042-54
RTI-1241	2042-55
RTI-1243	2042-53
RTI-1250	2033-13
RTI-1251	2033-15
RTI-1252	2033-14
RTI-1260	2040-5
RTI-1262	2040-3
RTI-1270	2039-56
RTI-1280	2039-63
RTI-1281	2040-2
RTI-1282	2039-67
RTI-1287	2040-10
RTI-600	2044-20
RTI-602	2044-19
RTI-711	2035-40
RTI-724	2035-39
RTI-732	2035-38
SDC1740	3403-94
SDC1741	3403-95
SDC1742	3403-96

Apex Microtechnology

Device	Page-Line
PA-07	¶ 407-12
PA01	★ 3525 3348-40 3330-56 3357-91
PA02	★ 3525 3357-27
PA02A	★ 3525 3346-177
PA02M	★ 3525 3357-26
PA03	★ 3525 3330-39 3331-66

Arranged alphanumerically from left to right.

ADVERTISERS' PRODUCT INDEX

Apex Microtechnology (Cont'd)

Device	Page-Line
PA03A	★ **3525**
	3340-104
PA07	★ **3525**
	3348-34
	3360-27
	3330-50
	3331-68
	3346-19
PA07A	★ **3525**
	3340-103
PA07M	★ **3525**
	3346-20
PA08	★ **3525**
	3348-85
	3360-18
	3330-101
	3331-59
	3346-18
PA08A	★ **3525**
	3340-102
PA08M	★ **3525**
	3346-21
PA09	★ **3525**
	3348-49
	3330-65
	3346-178
PA09A	★ **3525**
	3342-2
PA09M	★ **3525**
	3346-179
PA10	★ **3525**
	3348-36
	3360-30
	3330-52
	3331-71
	3355-9
PA10A	★ **3525**
	3348-35
	3360-28
	3330-51
	3331-69
	3346-212
PA10M	★ **3525**
	3348-37
	3330-53
	3355-10
PA11	★ **3525**
	3348-38
	3360-54
	3330-54
	3331-95
	3357-53
PA12	★ **3525**
	3348-26
	3360-31
	3330-42
	3331-72
	3355-7
	¶ 419-1
PA12A	★ **3525**
	3348-24
	3360-29
	3330-40
	3331-70
	3346-211
PA12H	★ **3525**
	3355-5
PA12M	★ **3525**
	3348-27
	3330-43
	3355-8
PA51	★ **3525**
	3330-49
	3331-90
	3357-51
PA51A	★ **3525**
	3348-31
	3360-32
	3330-47
	3331-73
	3352-40
PA51M	★ **3525**
	3348-32
	3360-33
	3330-48
	3331-74
	3352-41
PA73	★ **3525**
	3348-39
	3360-55
	3330-55
	3331-96
	3357-54
PA73M	★ **3525**
	3357-55
PA83	★ **3525**
	3348-106
	3360-19
	3330-122
	3331-60
	3346-173
PA83A	★ **3525**
	3344-5
PA83M	★ **3525**
	3348-107
	3360-20
	3330-123
	3331-61
	3346-174
PA84	★ **3525**
	3348-120
	3360-21
	3330-136
	3331-62
	3346-172
PA84A	★ **3525**
	3344-4
PA84M	★ **3525**
	3346-176
PA84S	★ **3525**
	3346-175
PA9	3331-75

Applied Micro Circuits

Device	Page-Line
Macro Matrix	4485-1
Q1300S	★ **4603**
	4439-6
Q1400C	4439-7
Q1500A	★ **4602**
	4439-4
Q1750C	4439-9
Q2400S	★ **4603**
	4439-10
Q2700C	4439-11
Q3300C	4439-12
Q3500S	★ **4603**
	4439-13
Q4300C	4439-14
Q6200C	4439-15
Q700	★ **4602**
	4439-3
Q710	★ **4602**
	4439-2
Q720	★ **4602**
	4439-1
QH1500A	★ **4602**
	4439-5
QM1600S	★ **4603**
	4439-8
QUASAR	4459-1

Array Technology

Device	Page-Line
AT-LD-04	4462-5
AT-LD-08	4462-6
CMOS Library	4478-2
DHS/HCD	4485-12
DHS1200	4439-23
DHS150	4439-16
DHS1500	4439-24
DHS1800	4439-26
DHS2200	4439-27
DHS2650	4439-28
DHS300	4439-17
DHS450	4439-19
DHS675	4439-20
DHS900	4439-21
HCD1000	4439-22
HCD1500	4439-25
HCD300	4439-18
NMOS Library	4478-3

AT&T

Device	Page-Line
M411024K-12	3830-52
M411024K-15	3830-62
M411024P-12	3830-53
M411024P-15	3830-63
M41256N-10	3828-88
M41256N-12	3829-3
M41256N-15	3829-37
M41256P-10	3828-89
M41256P-12	3829-4
M41256P-15	3829-38
M441024K-15	3829-89
M441024P-15	3829-90
M51064P-15	3827-72
M78004-20	3834-25
M78004-24	3834-26
M79004-20	3834-29
M79004-24	3834-30
M79018-150	3839-52
T7000A	3379-11
T7001	3380-112
T7010	3379-102
T7100	1468-14
T7101	1468-13
T7102	1468-15
T7110	1468-16
UNIX	1465-1
WE32100	★ **1602**
	1465-2
	★ **1602**
	1439-8
WE32101	★ **1602**
	1465-7
WE32102	★ **1602**
	1465-3
WE32103	★ **1602**
	1465-5
WE32104	★ **1602**
	1465-4
WE32106	★ **1603**
	843-6
	★ **1603**
	1465-6
WE321DS	★ **1603**
	1811-6
WE321EB	★ **1603**
	2029-30
WE321SB-V100	★ **1603**
	2029-31

Brooktree

Device	Page-Line
BT101	2855-29
BT101	1465-105
BT102	2855-27
BT102	1465-106
BT103	2855-28
BT103	1465-107
BT104	2866-12
BT105	2866-13
BT106	2854-17
BT108	2854-4
BT110	2855-20
BT248	2836-19
BT258	2836-18
BT444	2849-6
BT444	1465-108
BT450	2849-8
BT450	1466-3
BT451	2849-9
BT451	1466-4
BT452	2849-7
BT452	1465-60
BT453	2855-31
BT453	1466-5
BT458	2855-30
BT458	1466-6

Burr-Brown Corporation

Device	Page-Line
3271/25	3337-34
3291	3341-61
3329	★ **3150**
	3330-112
3450	★ **3151**
3451	★ **3151**
3452	★ **3151**
3455	★ **3151**
3456	★ **3151**
	3306-137
3500	¶ 406-2
3500 Series	¶ 420-9
3500A	★ **3149**
3500A	★ **3154**
	3353-1
3500B	★ **3149**
3500B	★ **3154**
	3346-75
3500C	★ **3149**
3500C	★ **3154**
	3344-55
3500E	★ **3149**
3500E	★ **3154**
	3341-51
	3343-19
3500MP	★ **3149**
3500MP	★ **3154**
	3363-7
3500R	★ **3149**
3500R	★ **3154**
	3353-2
3500R/MIL	★ **3149**
3500R/MIL	★ **3154**
	3353-3
3500S	★ **3149**
3500S	★ **3154**
	3346-76
3500T	★ **3149**
3500T	★ **3154**
	3344-56
3500U/883B	★ **3149**
3500U/883B	★ **3154**
	3353-4
3501A	★ **3149**
	3352-34
3501B	★ **3149**
	3346-65
3501C	★ **3149**
	3346-64
3501R	★ **3149**
	3352-35
3501S	★ **3149**
	3346-66
3507J	★ **3150**
	3357-63
3508J	★ **3150**
	3352-56
3510A	★ **3149**
3510A	★ **3154**
	3340-27
3510B	★ **3149**
3510B	★ **3154**
	3341-52
	3340-1
3510C	★ **3149**
3510C	★ **3154**
	3332-26
	3341-8
	3338-1
3510S	★ **3149**
3510S	★ **3154**
	3341-53
	3340-2
3510V	★ **3149**
3510V	★ **3154**
	3340-3
3521	¶ 405-17
3521H	★ **3149**
	3342-1
3521J	★ **3149**
	3340-56
3521K	★ **3149**
	3340-55
3521L	★ **3149**
	3341-54
	3340-52
3521R	★ **3149**
	3340-57
3522J	★ **3149**
	3344-1
3522K	★ **3149**
	3340-98
3522L	★ **3149**
	3332-30
	3350-58
3522S	★ **3149**
	3340-99
3523J	3332-22
3523J	3343-46
3523K	3332-16
3523K	3340-83
3523L	3332-6
3523L	3340-81
3527A	★ **3149**
	3340-95
3527B	★ **3149**
	3341-1
	3340-51
3527C	★ **3149**
	3340-94
3528A	★ **3149**
	3332-19
	3340-84
3528B	★ **3149**
	3332-11
	3335-2
3528C	★ **3149**
	3332-3
	3340-79
3542J	★ **3149**
	3357-143
3542S	★ **3149**
	3357-144
3550J	★ **3150**
	3356-59
3550K	★ **3150**
	3331-55
	3344-3
3550S	★ **3150**
	3344-2
3551J	★ **3150**
	3360-3
	3331-44
	3334-221
	3344-28
3551S	★ **3150**
	3360-4
	3331-45
	3334-222
	3344-29
3553	★ **3150**
	3306-35
	3329-17
	3348-81
	3330-97
3554	★ **3150**
	3331-16
3554A	★ **3150**
	3330-113
	3334-230
	3346-23
3554B	★ **3150**
	3330-114
	3334-231
	3344-22
3554S	★ **3150**
	3330-115
	3334-232
	3344-23
3571A	★ **3150**
	3330-87
	3331-76
	3346-34
3572A	★ **3150**
	3330-66
	3331-77
	3346-35
3573	★ **3150**
	3330-73
	3357-49
3580J	★ **3149**
	3330-124
	3331-91
	3357-6
3581J	3330-138
3581J	3331-67
3581J	3346-161
3582J	3331-63
3582J	3346-160
3583	★ **3149**
	3330-120
	3331-64
	3346-162
3584	★ **3149**
	3331-65
	3346-163
3606	★ **3150**
	3307-99
3626A	★ **3150**
	3306-91
3626B	★ **3150**
	3306-92
3626C	★ **3150**
	3306-93
3627	★ **3150**
	3306-128
3629	★ **3150**
	3306-94
3629A	★ **3150**
	3337-1
3629B	★ **3150**
	3335-49
3629C	★ **3150**
	3335-50
3629S	★ **3150**
	3335-51
3630A	3306-95
3630B	3306-96
3630C	3306-97
3630S	3306-98
3650HG	★ **3151**
	3306-133
3652HG	★ **3151**
	3306-134
3656AG	★ **3151**
	3306-138
3660	¶ 404-9
3712R	¶ 396-3
3712T/R	3399-83
3713T	¶ 396-3
3713T/R	3399-84
3714T	3399-85
	¶ 395-13
4023	★ **3152**
	3401-23
4025	★ **3152**
	3401-24
4082/03	3398-98
4085	★ **3152**
	3401-56
4085M	★ **3152**
	3401-57
4115/04	★ **3152**
	3398-100
4127	★ **3152**
	3307-12
4131	3404-160
4203	★ **3151**
	3400-152
4203S	★ **3151**
	3400-153
4204	★ **3151**
	3400-154
4204S	★ **3151**
	3400-155
4205	★ **3151**
	3401-1
4205S	★ **3151**
	3401-2
4206	★ **3151**
	3401-3
4213	★ **3151**
4213	★ **3153**
	3401-4
4213S	★ **3151**
4213S	★ **3153**
	3401-5
4213U	★ **3151**
4213U	★ **3153**
	3401-6
4213V	★ **3151**
4213V	★ **3153**
	3401-7
4213W	★ **3151**
4213W	★ **3153**
	3401-8
4214	★ **3151**
	3401-9
4214M	★ **3151**
	3401-10
4301	★ **3152**
	3400-117
	¶ 422-11
4302	★ **3152**
	3400-118
4340	★ **3152**
	3403-145
4341	★ **3152**
	3403-146
4423	★ **3152**
	3401-25
722	3399-64
724	3399-65
ADC10HT	★ **3146**
	2842-25
	¶ 386-11

¶ Indicates page number in Application Note Directory.
★ Indicates additional data is provided on the page noted.

Burr-Brown Corporation (Cont'd)

Device	Page-Line
ADC574AJ	★ 3146 2844-45
ADC574AK	★ 3146 2843-50
ADC574AS	★ 3146 2841-39
ADC574AT	★ 3146 2844-46
ADC60-12	★ 3146 2839-50
ADC674AJ	★ 3146 2844-26
ADC674AK	★ 3146 2843-47
ADC674AS	★ 3146 2844-27
ADC674AT	★ 3146 2843-48
ADC71J	★ 3146 2847-28
ADC71K	★ 3146 2847-15
ADC72A	2847-25
ADC72B	2847-16
ADC72J	2847-26
ADC72K	2847-27
ADC731J	★ 3146 2847-6
ADC731K	★ 3146 2846-49
ADC73J	★ 3146 2847-7
ADC73K	★ 3146 2846-50
ADC76J	★ 3146 2847-22
ADC76K	★ 3146 2847-9
ADC803B	★ 3146 2839-36
ADC803C	★ 3146 2843-10
ADC803S	★ 3146 2839-37
ADC804	★ 3146 2843-49
ADC804S	★ 3146 2841-32
ADC80A-10	★ 3146 2845-42
ADC80A-12	★ 3146 2841-46
ADC82A	★ 3146 2846-42
ADC84K-10	★ 3146 2838-29
ADC84K-12	★ 3146 2840-29
ADC85-10	★ 3146 2838-31
ADC85-12	★ 3146 2840-32
ADC87/MIL	★ 3153 2840-12
ADC87U	★ 3153 2840-13
ATF76	★ 3152 3398-12
BB3528CM	¶ 406-8
CS450	1811-7
CS460	1811-8
DAC10HT	★ 3146 2861-50
DAC1200K-V	★ 3147 2869-9
DAC1201K-V	★ 3147 2869-8
DAC1600J-V	★ 3147 2872-50
DAC1600K-V	★ 3147 2872-18
DAC60	★ 3146
DAC63	★ 3146 844-42 ¶ 388-5 ★ 3146 2861-32

Device	Page-Line
DAC63S	★ 3146 2861-35
DAC70-CCD-I	★ 3146 2873-16
DAC70-COB-I	★ 3146 2872-52
DAC70-CSB-I	★ 3146 2872-43
DAC700B	★ 3147 2871-47
DAC700K	★ 3147 2871-48
DAC701B	★ 3147 2872-14
DAC701K	★ 3147 2872-15
DAC702B	★ 3147 2871-49
DAC702K	★ 3147 2871-50
DAC702S	★ 3147 2871-45
DAC703B	★ 3147 2872-16
DAC703K	★ 3147 2872-17
DAC703S	★ 3147 2872-19
DAC705B	★ 3146 2872-25
DAC705K	★ 3146 2872-26
DAC705S	★ 3146 2872-27
DAC706B	★ 3146 2871-51
DAC706K	★ 3146 2871-52
DAC706S	★ 3146 2871-53
DAC707B	★ 3146 2872-28
DAC707K	★ 3146 2872-29
DAC707S	★ 3146 2872-30
DAC708B	★ 3146 2871-54
DAC708K	★ 3146 2872-1
DAC708S	★ 3146 2872-2
DAC709B	★ 3146 2872-31
DAC709K	★ 3146 2872-32
DAC709S	★ 3146 2872-33
DAC71-CCD-V	★ 3146 2873-17
DAC71-COB-V	★ 3146 2873-18
DAC71-CSB-V	★ 3146 2872-35
DAC710	★ 3147 2872-49
DAC711	★ 3147 2872-51
DAC72-CCD-V	★ 3146 2873-19
DAC72-COB-V	★ 3146 2872-36
DAC72-CSB-V	★ 3146 2872-37
DAC736J	★ 3146 2871-42
DAC736K	★ 3146 2871-35
DAC73J	★ 3146 2871-43
DAC73K	★ 3146 2871-31
DAC74	★ 3147 2873-9
DAC80-CBI-I	★ 3147 2862-24
DAC80-CBI-V	★ 3147 2865-15
DAC80-CCD-I	★ 3147 2870-1
DAC800-CBI-I	★ 3147 2862-19

Device	Page-Line
DAC800-CBI-V	★ 3147 2862-20
DAC80Z-CBI-I	★ 3147 2862-16
DAC80Z-CBI-V	★ 3147 2865-16
DAC80Z-CCD-I	★ 3147 2870-2
DAC811A	★ 3147 2864-5
DAC811B	★ 3147 2861-12
DAC811J	★ 3147 2865-10
DAC811K	★ 3147 2861-20
DAC811R	★ 3147 2864-6
DAC811S	★ 3147 2861-13
DAC812B	★ 3146 2866-20
DAC812C	★ 3146 2861-47
DAC82K	★ 3147 2852-51
DAC82S	★ 3147 2852-50
DAC850-CBI-I	★ 3147 2862-17
DAC850-CBI-V	★ 3147 2864-19
DAC851-CBI-I	★ 3147 2862-18 2862-21
DAC851-CBI-V	★ 3147 2864-20
DAC85LD-CBI-V	★ 3147 2865-17
DAC85Z-CBI-V	★ 3147 2865-18
DAC87/CBI	★ 3153 2865-26
DAC870U	★ 3153 2864-35
DAC870V	★ 3153 2864-36
DAC90B	★ 3147 2852-39
DAC90S	★ 3147 2852-4
DIV100	★ 3152 3399-73
FOR110	¶ 395-12
FOT110	¶ 395-12
FOT110	¶ 396-16
FOT114	¶ 412-4
INA101	★ 3150 3306-99
INA102	★ 3150 3306-72
INA104	★ 3150 3306-100
INA258U	★ 3154 3369-32
INA258V	★ 3154 3369-31
INA258W	★ 3154 3369-30
ISO100	¶ 404-16
ISO100AP	★ 3151 3306-135
LOG100	★ 3152 3307-17
MC10101	¶ 388-5
MC10136	¶ 388-5
MC10176	¶ 388-5
MC10176	¶ 388-5
MCM10149	¶ 388-5
MP10	★ 3148 2856-2 ¶ 377-11 ¶ 381-16 ★ 3148 1469-57
MP11	★ 3148 2856-3 ¶ 377-11 ¶ 381-16 ★ 3148 1469-58
MP1104	2037-48

Device	Page-Line
MP1216	2037-44
MP1216-PGA	2037-45
MP20	★ 3148 2837-35 ¶ 364-15 ¶ 377-11 ★ 3148 1457-73 1460-12 1460-83 1469-50
MP21	★ 3148 2837-36 ¶ 364-15 ¶ 377-11 ★ 3148 1453-100 1456-105 1457-298 1460-4 1469-51
MP22	★ 3148 1456-106 1457-74 1460-13 1460-84 1469-52
MP32	★ 3148 1456-107 1457-75 1460-14 1460-85 1469-53
MP702	2034-11
MP710	2034-9
MP710-NS	2034-10
MP7104	2034-7
MP7208	2033-60
MP7216	2034-1
MP7218	2034-2
MP7432	2034-4
MP7432-AO	2034-3
MP7504	2034-6
MP7608	2033-59
MP7608-I	2033-58
MP801	2035-50
MP802	2035-51
MP810	2035-46
MP810-AC	2035-45
MP810-DB	2035-47
MP810-LV	2035-48
MP810-NS	2035-49
MP821-05	2035-43
MP821-15	2035-44
MP830-72	2036-12
MP8304	2035-34
MP8305	2035-35
MP8316-I	2035-37
MP8316-V	2035-36
MP840	2036-11
MP8418	2035-19 ¶ 373-11
MP8418-AO	2035-20
MP8418-EXP	2035-15
MP8418-ISOE	2035-14
MP8418-PGA	2035-21
MP8418-PGA-AO	2035-22
MP8430	2035-25
MP8450	2035-26
MP8608	2035-17
MP8608-AO	2035-18
MP8616	2035-24
MP8616-AO	2035-23
MP8632	2035-28
MP8632-AO	2035-27
MPC16S	★ 3149 2831-88
MPC4D	★ 3149 2830-70
MPC800K	★ 3149 2831-27
MPC800S	★ 3149 2831-28
MPC801K	★ 3149 2830-64
MPC801S	★ 3149 2830-65
MPC8D	★ 3149 2831-29
MPC8S	★ 3149 2830-172
MPV901	2044-15

Device	Page-Line
MPV901A	2044-21
MPV901P	2044-22
MPV904	2044-18
MPV905	2044-17
MPV950D	2044-14
MPV950S	2044-16
MPV960	2044-13
MPY100	★ 3151 3401-11
MPY100A	★ 3151 3401-12
MPY100S	★ 3151 3401-13
MPY534	★ 3151 3400-124
MPY634	★ 3151 3401-14
MS4000	1811-9
OP21G	3333-20
OPA101AM	★ 3149 3340-105
OPA101BM	★ 3149 3340-53
OPA102AM	★ 3149 3340-106
OPA102BM	★ 3149 3340-54
OPA103	★ 3149 3332-20 3332-37
OPA103AM	★ 3149 3341-3 3340-93
OPA103BM	★ 3149 3341-2 3340-90
OPA103CM	★ 3149 3340-48
OPA103DM	★ 3149 3340-46
OPA104AM	★ 3149 3332-18 3343-45
OPA104BM	★ 3149 3332-10 3340-82
OPA104CM	★ 3149 3332-5 3340-80
OPA105	★ 3154 3332-38
OPA105UM	★ 3154 3340-49
OPA105V	★ 3154 3340-47
OPA105W	★ 3154 3340-45
OPA106U	★ 3154 3332-21 3340-44
OPA106V	★ 3154 3332-12 3340-43
OPA106W	★ 3154 3332-8 3340-42
OPA111A	★ 3149 3340-92
OPA111B	★ 3149 3335-3
OPA111S	★ 3149 3340-91
OPA11HT	3352-48
OPA121K	★ 3149 3340-101
OPA12HT	3357-71
OPA156A	★ 3149
OPA156A	★ 3150 3345-47
OPA201A	★ 3149 3343-17
OPA201B	★ 3149 3340-35
OPA201C	★ 3149 3339-5
OPA201S	★ 3149 3340-36
OPA2111AM	★ 3149 3362-3
OPA2111BM	★ 3149 3361-24
OPA2115M	3362-4

Device	Page-Line
OPA21E	★ 3149 3339-6
OPA21G	★ 3149 3343-16
OPA27A	★ 3149 3341-16 3337-21
OPA27B	★ 3149 3338-4
OPA27C	★ 3149 3339-40
OPA27E	★ 3149 3341-17 3337-22
OPA27F	★ 3149 3338-5
OPA27G	★ 3149 3339-41
OPA356A	★ 3149
OPA356A	★ 3150 3345-48
OPA37A	★ 3149 3341-18 3337-23
OPA37B	★ 3149 3338-18
OPA37C	★ 3149 3339-42
OPA37E	★ 3149 3341-19 3337-24
OPA37F	★ 3149 3338-19
OPA37G	★ 3149 3339-43
OPA501	★ 3150 3330-45
OPA501A	★ 3150 3348-30 3330-46 3357-52
OPA501B	★ 3150 3352-42
OPA501R	★ 3150 3357-50
OPA501S	★ 3150 3348-28 3330-44 3352-43
OPA511	★ 3150 3330-57
OPA511AM	★ 3150 3357-48
OPA512	★ 3150 3330-41
OPA512BM	★ 3150 3355-6
OPA512SM	★ 3150 3346-210
OPA600/MIL	★ 3154 3334-277
OPA600N	★ 3154 3346-31
OPA600U	★ 3154 3352-13
OPA600U/883B	★ 3154 3352-14
OPA600V/883B	★ 3154 3346-32
OPA600V/MIL	★ 3154 3346-33
OPA605	★ 3150 3331-56 3334-244
OPA605A	★ 3150 3344-14
OPA605B	★ 3150 3342-12
OPA605C	★ 3150 3342-10
OPA605H	★ 3150 3344-15
OPA605J	★ 3150 3342-13
OPA605K	★ 3150 3342-11
OPA606KM	★ 3149
OPA606KM	★ 3150 3345-17
OPA606KP	★ 3149
OPA606KP	★ 3150 3346-164

Arranged alphanumerically from left to right.

Burr-Brown Corporation (Cont'd)

Device	Page-Line
OPA606L	★ 3149
OPA606L	★ 3150 3337-32
OPA606S	★ 3149
OPA606S	★ 3150 3345-18
OPA8780U	★ 3154 3357-5
OPA8780UM	★ 3154 3357-4
OPA8780V	★ 3154 3357-3
OPA8780VM	★ 3154 3357-2
PCM50	¶ 389-2
PCM52	¶ 389-2
PCM53	¶ 389-2
PCM53J-I	★ 3147 2873-1
PCM53J-V	★ 3147 2873-6
PCM53K-I	★ 3147 2871-46
PCM53K-V	★ 3147 2872-20
PCM54H	★ 3147 2872-46
PCM54J	★ 3147 2872-47
PCM54K	★ 3147 2872-48
PCM55H	★ 3147 2872-44
PCM55J	★ 3147 2872-45
PCM75	★ 3147 3316-128 ¶ 389-2
PCM75J	★ 3147 2847-21
PCM75K	★ 3147 2847-8
PGA100AG	★ 3150 3306-115
PGA100BG	★ 3150 3306-116
PGA102	★ 3150 3306-117
PGA102A	★ 3150 3340-37
PGA102B	★ 3150 3339-11
PGA102S	★ 3150 3339-12
PGA200	★ 3150 3306-118
PGA201	★ 3150 3306-119
REF10	★ 3151 3402-186
REF101	★ 3151 3403-1
REF101J	★ 3151 3402-163
REF101S	★ 3151 3402-164
SDM853	★ 3148
SDM854	★ 3148 3399-44
SDM856	★ 3148 3399-45
SDM856/857	¶ 364-15
SDM856J	★ 3148 3399-46
SDM856K	★ 3148 3399-47
SDM857	★ 3148 3399-48
SDM858	★ 3148 3399-49
SHC298AM	★ 3148 3403-173
SHC5320K	★ 3148 3403-174
SHC5320S	★ 3148 3403-175
SHC80	★ 3148 3403-176
SHC803	★ 3148 3403-177
SHC804	★ 3148 3403-178
SHC85	★ 3148 3403-179
SHC85ET	★ 3148 3403-180
SHM60	★ 3148
SPV100	2044-8
ST4101	2015-35
ST4102	2017-2
ST4201-1	2042-14
ST4201-2	2042-15
ST4201-3	2042-13
ST4202-0	2042-9
ST4202-1	2042-11
ST4202-2	2042-10
ST4203-16	2042-8
ST4203-32	2042-19
ST4203-48	2042-21
ST4203-65	2042-22
ST4302	2041-9
ST4303-16	2039-43
ST4303-24	2039-44
ST4303-32	2039-45
ST4303-8	2039-46
ST4304	2040-64
ST4305	2039-49
ST4306	2041-34
ST4311	2040-38
ST4315	2039-11
ST4394	2017-11
ST4394	2040-40
ST4402	2041-44
ST4411	2039-3
ST4421	2041-54
ST4504	2039-7
ST4505	2039-18
ST4603	2017-33
ST4703	2041-13
UAF11	★ 3152 3398-13
UAF11H	★ 3152 3398-14
UAF21	★ 3152 3398-15
UAF21H	★ 3152 3398-16
UAF31	★ 3152 3398-17
UAF41	★ 3152 3398-18
VFC100	★ 3148 3405-66
VFC12	★ 3148
VFC15	★ 3148
VFC32	★ 3148
VFC32	★ 3153 3405-67 ¶ 394-5
VFC320	★ 3148 3405-68
VFC42	★ 3148 3405-92
VFC42M	★ 3148 3405-93
VFC52	★ 3148 3405-94
VFC52M	★ 3148 3405-95
VFC62	★ 3148 3405-96
XTR100AM	★ 3151 3308-70
XTR100AP	★ 3151 3308-71
XTR100BM	★ 3151 3308-72
XTR100BP	★ 3151 3308-73
XTR110	★ 3151 3405-125

Cadnetix

Device	Page-Line
CDX-50000	4905-2
CDX-50000S	4905-3
CDX-5000A	4905-1
CDX-5000S	★ 5102
CDX-5900	4906-1
CDX-59000S	★ 5102 4906-2
CDX-75000	4978-2
CDX-77000	5023-2
CDX-7900	5017-2
CDX-79000	5017-3
CDX-79000	5023-3
CDX-9100	4906-3
CDX-9150	4907-1
CDX-9200	4907-2
CDX-9300	4907-3
CDX50000	★ 5102
CDX5000A	★ 5102
CDX5900	★ 5102
CDX59000	★ 5102
CDX75000	★ 5102
CDX77000	★ 5102
CDX7900	★ 5102
CDX79000	★ 5102
CDX9100	★ 5102
CDX9150	★ 5102
CDX9200	★ 5102
CDX9300	★ 5102
Hierarch Sch Ed	5041-61
Route Editor	★ 5102 4988-2 5041-79 ★ 5102
VLA CADAT	★ 5102 5008-2 ★ 5102

CAE Systems, Div. of Tektronix

Device	Page-Line
CAE-2000	4459-23
CAE-2000	4459-49
CAE-2000	4483-58
CAE2000	4459-2
CAE2000	4459-9
CAE2000	4459-15
CAE2000	4461-15
DAS	★ 5114 5032-2 ★ 5114
DAS9100	★ 5114 5032-2 ★ 5114
DASLINK	★ 5114
DCALC	★ 5114
DDSC	5064-73
DDSC	★ 5114
Designers W/Sys	★ 5114 4932-2 ★ 5114
FML	★ 5114
Full Custom W/Sys	★ 5114 4932-3 ★ 5114
Gate Array W/Sys	★ 5114 4933-1 ★ 5114
IDEAL	4460-25
IDEAL	4483-43
IDEAL	4483-44
ILA	★ 5114
Ideal	4958-3
Ideal	★ 5114
LEIA	5003-2
LEIA	★ 5114
MICROLINK	★ 5114
MULTISIM	★ 5114
Merlyn-G	4994-2
Merlyn-G	5065-55
Merlyn-PCB	4983-3
Merlyn-PCB	5065-61
Merlyn-PCB	★ 5114
Merlyn-S	★ 5114 4998-1 5065-67 ★ 5114
PCB W/Sys	★ 5114 4933-2 ★ 5114
SFA	4974-2
SFA	★ 5114
Software Dev W/Sys	★ 5114 4933-3 ★ 5114
Standard Cell W/Sys	★ 5114 4934-1 ★ 5114
Structured Cost W/Sys	★ 5114
Structured Cost W/Sys	★ 5114
Structured Cust W/Sys	4934-2
TEKSTATION 2000	4460-36
TEKWRITER	★ 5114
TMA	★ 5114
Test&Meas W/Sys	★ 5114
Test & Meas W/Sys	★ 5114 4934-3
Tubo Chip	★ 5114
Turbo Chip	5020-1
Turbo Chip	★ 5114
VLSI DESIGNR V	★ 5114
VR SYSTEM	4461-5
VR SYSTEM	4484-2

CAECO

Device	Page-Line
CAEPAC I	★ 5105 5000-2 ★ 5105
VLSI DESIGNER III	★ 5105
VLSI DESIGNER IV	★ 5105
VLSI DESIGNER V	★ 5105
VLSI DESYGNER III	★ 5105 4908-1
VLSI DESYGNER IV	★ 5105 4908-2
VLSI DESYGNER V	★ 5105 4908-3

California Devices

Device	Page-Line
CDI1000	4440-13
CDI2000	4440-14
CDI3000	4440-18
CDI4000	4440-20
CDI6000	4440-23
CDI8800	4440-26
CHA10000	★ 4610 4440-43
CHA1200	★ 4610 4440-29
CHA13000	★ 4610 4441-1
CHA18000	★ 4610 4441-2
CHA200	★ 4610 4440-15
CHA2100	★ 4610 4440-32
CHA2800	★ 4610 4440-34
CHA3600	★ 4610 4440-36
CHA4600	★ 4610 4440-38
CHA6000	★ 4610 4440-40
CHA7200	★ 4610 4440-41
DLM10000	★ 4605 4440-44
DLM1200	★ 4605 4440-30
DLM1600	★ 4605 4440-31
DLM200	★ 4605 4440-16
DLM2100	★ 4605 4440-33
DLM2800	★ 4605 4440-35
DLM3600	★ 4605 4440-37
DLM400	★ 4605 4440-21
DLM4600	★ 4605 4440-39
DLM700	★ 4605 4440-24
DLM7200	★ 4605 4440-42
DLM900	★ 4605 4440-27
HCS10000	4440-28
HCS3100	4440-17
HCS4100	4440-19
HCS5400	4440-22
HCS7700	4440-25

Calma

Device	Page-Line
CATSCOPE	5032-1
Cards II	4977-3
CellPlus	4997-1
Custom Plus	5002-1
Fast Mask Engine	5013-3
GDS-II	4461-32
GDS I	5043-7
GDS II	4466-14
GDS II	5002-3
GDS II	5043-13
GDS II/32	4903-3
GDSII	4466-18
T-Arrays	4994-3
T-Boards	4990-2
TCAT	4974-3
TEGAS	4459-3
TEGAS	4459-41
TEGAS	4459-50
TEGAS	4459-63
TEGAS	4483-12
TEGAS	4964-3
TEGAS	5043-61
TEGAS-5	4964-3
TEGASTATION	4459-42
TEGASTATION	4460-37
TEGASTATION	4483-13
TEGASTATION	4483-59
TEGAStation	4910-1
TEXSIM	4460-7
TEXSIM/B	4965-1
TEXSIM/B	5044-13
TSCAN	4965-3
Techplus	4977-3
VECHECK	5015-3

Case Technology

Device	Page-Line
CASE LAYOUT SYS	★ 5106
CT-1000	5044-43
CT1000-2000	★ 5106
CT1000/SILOS	4460-38
CT1000/SILOS	4483-60
Case Layout Sys	★ 5106 4978-1 ★ 5106
SUMMARY	★ 5106 4911-1 ★ 5106

Chips & Technology

Device	Page-Line
82A203	★ 1604 1465-15
82A204	★ 1604 1465-16
82A205	★ 1604 1465-14
82C201	★ 1604 1465-18
82C202	★ 1604 1465-17
82C431	★ 1605 1465-90
82C432	★ 1605 1466-7
82C433	★ 1605 1465-66
82C434	★ 1605 1465-77

Circuit Technology Inc.

Device	Page-Line
52981	3378-65
54HCT137	818-126
54HCT138	818-38
54HCT139	817-130
54HCT237	818-127
54HCT238	818-39
54HCT239	817-131
54HCT240	839-96
54HCT241	839-172
54HCT244	839-173
54HCT245	841-150
54HCT373	829-159
54HCT374	822-99
54HCT533	830-84
54HCT534	821-183
54HCT540	810-83
54HCT541	810-84
54HCT563	830-85
54HCT564	821-184
54HCT573	829-160
54HCT574	822-100
5981	★ 3526 3381-100
5983	3381-101
74HCT137	818-128
74HCT138	818-40
74HCT139	817-132
74HCT237	818-129
74HCT238	818-41
74HCT239	817-133
74HCT240	839-97
74HCT241	839-174
74HCT244	839-175
74HCT245	841-151
74HCT373	829-161
74HCT374	822-101
74HCT533	830-86
74HCT534	821-185
74HCT540	810-85
74HCT541	810-86
74HCT563	830-87
74HCT564	821-186
74HCT573	829-162
74HCT574	822-102
CELLMOS	4478-8
CELLMOS	4478-9
CELLMOS	4478-10
CELLMOS	4478-11
CELLMOS	4478-12
CT1487	★ 601 2901-39
CT1555	★ 601 1466-58
CT1560	★ 601 1468-17
CT1561	★ 601 1468-18
CT1562	★ 601 1468-19
CT1563	★ 601 1468-20
CT1589	★ 601 2901-40
CT1601	★ 601 1468-21
CT1602	★ 601 1468-22
CT1603	★ 601 1468-23
CT1604	★ 601 1468-24
CT1605	★ 601 1468-25
CT1606	★ 601 1468-26
CT1608	★ 601 1466-59
CT1610	★ 601 1468-27
CT1611	★ 601 1458-36
CT1612	★ 601 1468-28
CT1615	★ 601 1468-29
CT1617	★ 601 1468-30
CT2077	★ 601 2901-41
CT3077	★ 601 2901-42
CT3078	★ 601 2901-43
CT3231	★ 601 2901-44
CT3232	★ 601 2901-45
MA2010	4441-30
MA2013	4441-32
MA2016	4441-35
MA2024	4441-37
MA2038	4441-39
MA2068	4441-41
MA3010	4441-29
MA3013	4441-31

¶ Indicates page number in Application Note Directory.
★ Indicates additional data is provided on the page noted.

Circuit Technology Inc. (Cont'd)

Device	Page-Line
MA3016	4441-34
MA3024	4441-36
MA3038	4441-38
MA3068	4441-40
MA363	843-65
MA364	843-2
MA367	3377-56
MA5101	★ 4001
MA5114	★ 4001
MA522	3378-141
MA525	★ 3529
	3378-57
MA5262	★ 3530
	3378-55
MA5263	★ 3530
	3378-56
MA527	3378-145
MA5271	★ 3531
	3378-58
MA5272	★ 3531
	3378-50
MA5273	★ 3531
	3378-51
MA5274	★ 3531
	3378-52
MA528	★ 3532
	3378-142
MA530	3378-144
MA531	★ 3532
	3378-143
MA5402	★ 3530
	3378-53
MA5403	★ 3530
	3378-54
MA542	3378-66
MA556	3377-44
MA571	★ 3526
	3379-91
MA59C13	★ 3526
	3377-87
MA59C14	★ 3526
	3377-88
MA59C16	★ 3526
	3377-111
MA59C17	★ 3526
	3377-59
MA6116	★ 4001
MA717	★ 1009
	843-8
MA802	3381-23
MA803	3379-89
MA8304	4441-26
MA8505	4441-27
MA8510	4441-28
MA8515	4441-33
MA857	3381-18

Cypress Semiconductor

Device	Page-Line
C7C185-55M	3842-127
CY2147-35C	3839-89
CY2147-45C	3839-104
CY2147-45M	3839-105
CY2147-55C	3839-119
CY2147-55M	3839-120
CY2148-35C	3835-61
CY2148-45C	3835-79
CY2148-45M	3835-80
CY2148-55C	3835-108
CY2148-55M	3835-109
CY2149-35C	3835-62
CY2149-45C	3835-81
CY2149-45M	3835-82
CY2149-55C	3835-110
CY2149-55M	3835-111
CY21L48-35C	3835-63
CY21L48-45C	3835-83
CY21L48-55C	3835-112
CY21L49-35C	3835-64
CY21L49-45C	3835-84
CY21L49-55C	3835-113
CY27L203C	3831-85
CY27LS03M	3831-109
CY27LS07C	3831-86
CY27S03AC	3831-17
CY27S03AM	3831-18
CY27S03C	3831-38
CY27S03M	3831-39

Device	Page-Line
CY27S07AC	3831-19
CY27S07AM	3831-110
CY2901	844-80
CY2901B	1411-12
CY2901BC	1448-49
CY2901BM	1448-50
CY2901C	1411-13
CY2901CC	1448-51
CY2901CM	1448-52
CY2909AC	1448-133
CY2909AM	1448-134
CY2909C	1448-135
CY2909M	1448-136
CY2911AC	1448-137
CY2911AM	1448-138
CY2911C	1448-139
CY2911M	1448-140
CY3341-2C	3809-45
CY3341C	3809-43
CY54S189	3831-40
CY74S189	3831-41
CY7C122-15C	★ 4002
CY7C122-15C	★ 4005
	3832-113
CY7C122-25C	★ 4002
CY7C122-25C	★ 4005
	3833-6
CY7C122-25M	★ 4002
CY7C122-25M	★ 4005
	3833-7
CY7C122-35C	★ 4002
CY7C122-35C	★ 4005
	3833-12
CY7C122-35M	★ 4002
CY7C122-35M	★ 4005
	3833-13
CY7C128-35C	★ 4002
CY7C128-35C	★ 4005
	3837-48
CY7C128-45C	★ 4002
CY7C128-45C	★ 4005
	3837-53
CY7C128-45M	★ 4002
CY7C128-45M	★ 4005
	3837-54
CY7C128-55C	★ 4002
CY7C128-55C	★ 4005
	3837-67
CY7C128-55M	★ 4002
CY7C128-55M	★ 4005
	3837-68
CY7C129-35C	★ 4002
CY7C129-35C	★ 4005
	3837-49
CY7C129-45C	★ 4002
CY7C129-45C	★ 4005
	3837-55
CY7C129-45M	★ 4002
CY7C129-45M	★ 4005
	3837-56
CY7C129-55C	★ 4002
CY7C129-55C	★ 4005
	3837-69
CY7C129-55M	★ 4002
CY7C129-55M	★ 4005
	3837-70
CY7C147-25C	★ 4002
CY7C147-25C	★ 4005
	3839-74
CY7C147-35C	★ 4002
CY7C147-35C	★ 4005
	3839-90
CY7C147-35M	★ 4002
CY7C147-35M	★ 4005
	3839-91
CY7C147-45C	★ 4002
CY7C147-45C	★ 4005
	3839-106
CY7C147-45M	★ 4002
CY7C147-45M	★ 4005
	3839-107
CY7C148-25C	★ 4002
CY7C148-25C	★ 4005
	3835-48
CY7C148-35C	★ 4002
CY7C148-35C	★ 4005
	3835-65
CY7C148-35M	★ 4002
CY7C148-35M	★ 4005
	3835-66

Device	Page-Line
CY7C148-45C	★ 4002
CY7C148-45C	★ 4005
	3835-85
CY7C148-45M	★ 4002
CY7C148-45M	★ 4005
	3835-86
CY7C149-25C	★ 4002
CY7C149-25C	★ 4005
	3835-49
CY7C149-35C	★ 4002
CY7C149-35C	★ 4005
	3835-67
CY7C149-35M	★ 4002
CY7C149-35M	★ 4005
	3835-68
CY7C149-45C	★ 4002
CY7C149-45C	★ 4005
	3835-87
CY7C149-45M	★ 4002
CY7C149-45M	★ 4005
	3835-88
CY7C150-15C	★ 4002
CY7C150-15C	★ 4005
	3835-35
CY7C150-25C	★ 4002
CY7C150-25C	★ 4005
	3835-51
CY7C150-25M	★ 4002
CY7C150-25M	★ 4005
	3835-52
CY7C150-35C	★ 4002
CY7C150-35C	★ 4005
	3835-70
CY7C150-35M	★ 4002
CY7C150-35M	★ 4005
	3835-71
CY7C161-25C	★ 4003
	3844-98
CY7C161-35C	★ 4003
	3844-114
CY7C161-35M	★ 4003
	3844-115
CY7C161-45C	★ 4003
	3845-10
CY7C161-45M	★ 4003
	3845-11
CY7C162-25C	★ 4003
	3844-99
CY7C162-35C	★ 4003
	3844-116
CY7C162-35M	★ 4003
	3844-117
CY7C162-45C	★ 4003
	3845-12
CY7C162-45M	★ 4003
	3845-13
CY7C164-25C	★ 4003
	3844-94
CY7C164-35C	★ 4003
	3844-100
CY7C164-35M	★ 4003
	3844-101
CY7C164-45C	★ 4003
	3844-120
CY7C164-45M	★ 4003
	3844-121
CY7C166-25C	★ 4003
	3844-96
CY7C166-35C	★ 4003
	3844-106
CY7C166-35M	★ 4003
	3844-107
CY7C166-45C	★ 4003
	3845-4
CY7C166-45M	★ 4003
	3845-5
CY7C167-25C	★ 4002
CY7C167-25C	★ 4004
	3843-108
CY7C167-35C	★ 4002
CY7C167-35C	★ 4004
	3844-11
CY7C167-35M	★ 4002
CY7C167-35M	★ 4004
	3844-12
CY7C167-45C	★ 4002
CY7C167-45C	★ 4004
	3844-24
CY7C167-45M	★ 4002
CY7C167-45M	★ 4004
	3844-25

Device	Page-Line
CY7C168-25C	★ 4002
CY7C168-25C	★ 4004
	3840-120
CY7C168-35C	★ 4002
CY7C168-35C	★ 4004
	3841-13
CY7C168-35M	★ 4002
CY7C168-35M	★ 4004
	3841-14
CY7C168-45C	★ 4002
CY7C168-45C	★ 4004
	3841-53
CY7C168-45M	★ 4002
CY7C168-45M	★ 4004
	3841-54
CY7C169-25C	★ 4002
CY7C169-25C	★ 4004
	3840-121
CY7C169-35C	★ 4002
CY7C169-35C	★ 4004
	3841-15
CY7C169-35M	★ 4002
CY7C169-35M	★ 4004
	3841-16
CY7C169-40C	★ 4002
CY7C169-40C	★ 4004
	3841-48
CY7C169-40M	★ 4002
CY7C169-40M	★ 4004
	3841-49
CY7C170-35C	★ 4003
	3841-28
CY7C170-35M	★ 4003
	3841-29
CY7C170-45C	★ 4003
	3841-69
CY7C170-45M	★ 4003
	3841-70
CY7C171-25C	★ 4003
	3841-4
CY7C171-35C	★ 4003
	3841-31
CY7C171-35M	★ 4003
	3841-32
CY7C171-45C	★ 4003
	3841-72
CY7C171-45M	★ 4003
	3841-73
CY7C172-25C	★ 4003
	3841-5
CY7C172-35C	★ 4003
	3841-33
CY7C172-35M	★ 4003
	3841-34
CY7C172-45C	★ 4003
	3841-74
CY7C172-45M	★ 4003
	3841-75
CY7C185-35C	★ 4003
	3842-115
CY7C185-45C	★ 4003
	3842-119
CY7C185-45M	★ 4003
	3842-120
CY7C185-55C	★ 4003
	3842-128
CY7C186-35C	★ 4003
	3842-116
CY7C186-45C	★ 4003
	3842-121
CY7C186-45M	★ 4003
	3842-122
CY7C186-55C	★ 4003
	3842-129
CY7C186-55M	★ 4003
	3842-130
CY7C187-25C	★ 4003
	3846-88
CY7C187-35C	★ 4003
	3846-92
CY7C187-35M	★ 4003
	3846-93
CY7C187-45C	★ 4003
	3847-3
CY7C187-45M	★ 4003
	3847-4
CY7C187-55C	★ 4003
	3847-21
CY7C189-18C	★ 4002
CY7C189-18C	★ 4005
	3831-14

Device	Page-Line
CY7C189-25C	★ 4002
CY7C189-25C	★ 4005
	3831-20
CY7C189-25M	★ 4002
CY7C189-25M	★ 4005
	3831-21
CY7C189C	★ 4002
CY7C189C	★ 4005
	831-95
CY7C189M	★ 4002
CY7C189M	★ 4005
	831-101
CY7C190-18C	★ 4002
CY7C190-18C	★ 4005
	3831-15
CY7C190-25C	★ 4002
CY7C190-25C	★ 4005
	3831-22
CY7C190-25M	★ 4002
CY7C190-25M	★ 4005
	3831-23
CY7C190C	★ 4002
CY7C190C	★ 4005
	831-96
CY7C190M	★ 4002
CY7C190M	★ 4005
	831-97
CY7C225-30C	★ 4006
	3815-85
CY7C225-35M	★ 4006
	3815-88
CY7C225-40C	★ 4006
	3815-101
CY7C225-40M	★ 4006
	3815-102
CY7C235-30C	★ 4006
	3817-66
CY7C235-40C	★ 4006
	3817-81
CY7C235-40M	★ 4006
	3817-82
CY7C245-18C	★ 4006
	3818-63
CY7C245-35C	★ 4006
	3818-85
CY7C245-45C	★ 4006
	3818-106
CY7C245-45M	★ 4006
	3818-107
CY7C245-45WC	★ 4006
	3818-108
CY7C245-45WM	★ 4006
	3818-109
CY7C261-45C	★ 4006
	3821-34
CY7C261-55C	★ 4006
	3821-43
CY7C261-55M	★ 4006
	3821-44
CY7C261-65C	★ 4006
	3821-56
CY7C261-65M	★ 4006
	3821-57
CY7C263-40C	★ 4006
	3821-31
CY7C263-55C	★ 4006
	3821-45
CY7C263-55M	★ 4006
	3821-46
CY7C263-65C	★ 4006
	3821-58
CY7C263-65M	★ 4006
	3821-59
CY7C264-40C	★ 4006
	3821-32
CY7C264-55C	★ 4006
	3821-47
CY7C264-55M	★ 4006
	3821-48
CY7C264-65C	★ 4006
	3821-60
CY7C264-65M	★ 4006
	3821-61
CY7C281-30C	★ 4006
	3817-64
CY7C281-45C	★ 4006
	3817-85
CY7C281-45M	★ 4006
	3817-86
CY7C282-30C	★ 4006
	3817-65

Device	Page-Line
CY7C282-45C	★ 4006
	3817-87
CY7C282-45M	★ 4006
	3817-88
CY7C291-25C	★ 4006
	3818-72
CY7C291-35C	★ 4006
	3818-82
CY7C291-35WC	★ 4006
	3818-84
CY7C291-50C	★ 4006
	3818-121
CY7C291-50M	★ 4006
	3818-122
CY7C291-50WC	★ 4006
	3819-1
CY7C291-50WM	★ 4006
	3819-2
CY7C292-25C	★ 4006
	3818-73
CY7C292-35C	★ 4006
	3818-83
CY7C292-50C	★ 4006
	3818-123
CY7C292-50M	★ 4006
	3818-124
CY7C401-10C	3809-53
CY7C401-10M	3809-54
CY7C401-15C	3809-70
CY7C401-15M	3809-71
CY7C401-5C	3809-46
CY7C401-5M	3809-47
CY7C402-10C	3809-94
CY7C402-10M	3809-55
CY7C402-15C	3809-103
CY7C402-15M	3809-72
CY7C402-5C	3809-87
CY7C402-5M	3809-88
CY7C403-10C	3809-56
CY7C403-10M	3809-57
CY7C403-15C	3809-73
CY7C403-15M	3809-74
CY7C403-25C	3809-83
CY7C403-25M	3809-84
CY7C403-5C	3809-48
CY7C403-5M	3809-49
CY7C404-10C	3809-95
CY7C404-10M	3809-58
CY7C404-15C	3809-104
CY7C404-15M	3809-75
CY7C404-25C	3809-114
CY7C404-25M	3809-115
CY7C404-5C	3809-89
CY7C404-5M	3809-90
CY7C510	808-9
CY7C510C	807-80
CY7C510M	1449-13
CY7C516	855-160
CY7C516C	1449-18
CY7C516M	1449-19
CY7C517	855-161
CY7C517C	1449-20
CY7C517M	1449-21
CY7C543	808-10
CY7C543C	1449-14
CY7C543M	1449-15
CY7C901	844-81
CY7C901-23C	1405-5
CY7C901-27M	1405-6
CY7C901-301C	1448-53
CY7C901-31C	1405-7
CY7C901-32M	1448-54
CY7C901-32M	1411-14
CY7C901-69C	1405-8
CY7C901-88M	1448-129
CY7C901-88M	1405-9
CY7C909-30C	1448-141
CY7C909-30M	1448-142
CY7C909-40C	1448-143
CY7C909-40M	1448-144
CY7C910C	1462-98
CY7C910M	1462-99
CY7C911-30C	1448-145
CY7C911-30M	1448-146
CY7C911-40C	1448-147
CY7C911-40M	1448-148
CY8C901-69C	1405-10
CY9122-25C	3833-8
CY9122-35C	3833-14
CY9122-45C	3833-27
CY91L22-35C	3833-11
CY91L22-45C	3833-28

Arranged alphanumerically from left to right.

ADVERTISERS' PRODUCT INDEX

Cypress Semiconductor (Cont'd)

Device	Page-Line
CY93422AC	3833-15
CY93422AM	3833-29
CY93422C	3833-25
CY93422M	3833-45
CY93L422AC	3833-26
CY93L422AM	3833-41
CY93L422C	3833-46
CY93L422M	3833-54
CYPAL16R8A-2C	4471-43
CYPAL22V10-25CC	4470-8
CYPAL22V10-25WC	4473-26
CYPAL22V10-30MC	4470-77
CYPAL22V10-30WM	4473-27
CYPAL22V10-35CC	4471-44
CYPAL22V10-35WC	4473-28
CYPAL22V10-40MC	4471-45
CYPAL22V10-40WM	4473-40
CYPALC16L8A-2CC	4471-46
CYPALC16L8A-2MC	4472-15
CYPALC16L8A-2WC	4473-29
CYPALC16L8A-2WM	4473-41
CYPALC16L8AC	4470-9
CYPALC16L8ACC	4470-10
CYPALC16L8AM	4470-78
CYPALC16L8AMC	4470-79
CYPALC16R4A-2CC	4471-47
CYPALC16R4A-2MC	4472-16
CYPALC16R4A-2WC	4473-30
CYPALC16R4A-2WM	4473-42
CYPALC16R4AC	4470-11
CYPALC16R4ACC	4470-12
CYPALC16R4AM	4470-80
CYPALC16R4AMC	4470-81
CYPALC16R6A-2CC	4471-48
CYPALC16R6A-2MC	4472-17
CYPALC16R6A-2WC	4473-31
CYPALC16R6A-2WM	4473-43
CYPALC16R6AC	4470-13
CYPALC16R6ACC	4470-14
CYPALC16R6AM	4470-82
CYPALC16R6AMC	4470-83
CYPALC16R8A-2MC	4472-18
CYPALC16R8A-2WC	4473-32
CYPALC16R8A-2WM	4473-44
CYPALC16R8AC	4470-15
CYPALC16R8ACC	4470-16
CYPALC16R8AM	4470-84
CYPALC16R8AMC	4470-85

Daisy Systems

Device	Page-Line
Board Master	★ 5108
	4977-1
	★ 5108
CELL MASTER	4483-14
CELL MASTER	4483-28
CELL MASTER	4483-31
CELL MASTER	4483-56
CELL MASTER	4484-5
CELL MASTER	4484-8
CHIP MASTER	4466-1
CHIP MASTER	4466-5
CHIP MASTER	4466-20
CHIP MMASTER	★ 5108
Chip Master	4466-11
Chip Master	★ 5108
	5001-1
	★ 5108
DFS	4970-3
DFS	★ 5108
DRAWING EDITOR II	5047-55
DSF	★ 5108
Daisy Logic Sim	★ 5108
	4955-3
	5047-49
	★ 5108
Engineering Test Sys	★ 5108
	5033-1
	★ 5108
GATE MASTER	4459-21
GATE MASTER	4459-22
GATE MASTER	4459-24
GATE MASTER	4459-29
GATE MASTER	4459-34
GATE MASTER	4459-39
GATE MASTER	4460-13
	(Continued)
GATE MASTER	4460-16
GATE MASTER	4461-1
GATEMASTER	4459-10
GATEMASTER	4459-16
GATEMASTER	4459-51
GATEMASTER	4459-61
GATEMASTER	4459-64
GATEMASTER	4460-43
GATEMASTER	4460-48
GATEMASTER	4460-54
GATEMASTER	4460-58
GATEMASTER	4460-61
GATEMASTER	4460-64
GATEMASTER	4460-67
GATEMASTER	4460-69
GATEMASTER	4460-72
GATEMASTER	4460-76
GATEMASTER	4461-1
GATEMASTER	4461-8
GATEMASTER	4461-22
GATEMASTER	4461-43
GATEMASTER	4466-24
GATEMASTER	4483-71
Gate Master	★ 5108
	4993-2
	5048-1
	★ 5108
Inter Rules Checker	★ 5108
	5014-2
	★ 5108
LDS	5054-85
LOGICIAN	4459-4
LOGICIAN	4459-11
LOGICIAN	4459-17
LOGICIAN	4459-43
LOGICIAN	4459-65
LOGICIAN	4459-69
LOGICIAN	4459-70
LOGICIAN	4460-10
LOGICIAN	4460-26
LOGICIAN	4460-31
LOGICIAN	4460-39
LOGICIAN	4461-16
LOGICIAN	4461-20
LOGICIAN	4461-26
LOGICIAN	4461-33
LOGICIAN	4461-36
LOGICIAN	4483-9
LOGICIAN	4483-20
LOGICIAN	4483-34
LOGICIAN	4483-45
LOGICIAN	4483-61
LOGICIAN	4483-65
LOGICIAN	4483-68
LOGICIAN	4484-11
LOGICIAN	4484-15
LOGICIAN	4484-19
LOGICIAN	4484-26
LOGICIAN	4484-28
LOGICIAN	4484-41
LOGICIAN	4484-48
LOGICIAN	4484-54
MDFS	4972-2
MEGA LOGICIAN	4483-6
MEGALOGICIAN	4483-21
MEGALOGICIAN	4484-49
MegaFAULT	★ 5108
	4972-3
	★ 5108
MegaFault	5031-2
MegaLogician	★ 5108
	5026-1
	5031-3
	★ 5108
PERSONAL LOGICIAN	4459-12
PERSONAL LOGICIAN	4459-18
PERSONAL LOGICIAN	4459-44
PERSONAL LOGICIAN	4483-15
PERSONAL LOGICIAN	4483-22
Phys Med Ext (PMX)	★ 5108
	5019-1
	★ 5108
SUMMARY	★ 5108
	4913-3
	★ 5108
Siliconmaster	5010-1

Data I/O

Device	Page-Line
ABEL	4477-1
ABEL	4477-3
ABEL	4477-5
ABEL	5007-1
ABEL	5048-19
ABEL	★ 5109
DASH	★ 5109
PLDtest	4973-2
Personal Silicon Foundry	★ 5109

Datel

Device	Page-Line
ACD-574	★ 3157
ADC-5101	★ 3160
ADC-5101	★ 3162
	2833-34
ADC-5101E	★ 3160
ADC-5101E	★ 3162
	2833-35
ADC-5101H	★ 3160
ADC-5101H	★ 3162
	2833-36
ADC-5210	★ 3160
ADC-5210	★ 3162
	2841-1
ADC-5210E	★ 3160
ADC-5210E	★ 3162
	2841-2
ADC-5210H	★ 3160
ADC-5210H	★ 3162
	2841-3
ADC-5211	★ 3160
ADC-5211	★ 3162
	2841-4
ADC-5211E	★ 3160
ADC-5211E	★ 3162
	2841-5
ADC-5211H	★ 3160
ADC-5211H	★ 3162
	2841-6
ADC-5212	★ 3160
ADC-5212	★ 3162
	2841-7
ADC-5212E	★ 3160
ADC-5212E	★ 3162
	2841-8
ADC-5212H	★ 3160
ADC-5212H	★ 3162
	2841-9
ADC-5213	★ 3160
ADC-5213	★ 3162
	2840-33
ADC-5213E	★ 3160
ADC-5213E	★ 3162
	2840-34
ADC-5213H	★ 3160
ADC-5213H	★ 3162
	2840-35
ADC-5214	★ 3160
ADC-5214	★ 3162
	2840-36
ADC-5214E	★ 3160
ADC-5214E	★ 3162
	2840-37
ADC-5214H	★ 3160
ADC-5214H	★ 3162
	2840-38
ADC-5215	★ 3160
ADC-5215	★ 3162
	2840-39
ADC-5215E	★ 3160
ADC-5215E	★ 3162
	2840-40
ADC-5215H	★ 3160
ADC-5215H	★ 3162
	2840-41
ADC-5216	★ 3160
ADC-5216	★ 3162
	2841-10
ADC-5216E	★ 3160
ADC-5216E	★ 3162
	2841-11
ADC-5216H	★ 3160
ADC-5216H	★ 3162
	2841-12
ADC-574AJ	2844-32
ADC-574AK	2841-35
ADC-574AL	2841-36
ADC-574AS	2844-33
ADC-574AT	2844-34
ADC-574AU	2844-35
ADC-7109	★ 3159
	2844-10
ADC-800	★ 3158
ADC-810	★ 3160
ADC-810	★ 3161
	844-39
ADC-810MC	★ 3160
ADC-810MC	★ 3161
	2839-44
ADC-810MM	★ 3160
ADC-810MM	★ 3161
	2839-45
ADC-811MC	★ 3160
ADC-811MC	★ 3161
	2839-51
ADC-811MM	★ 3160
ADC-811MM	★ 3161
	2839-52
ADC-815MC	★ 3160
ADC-815MC	★ 3161
	2833-30
ADC-815MM	★ 3160
ADC-815MM	★ 3161
	2833-31
ADC-816	★ 3160
ADC-816	★ 3161
	844-37
ADC-816MC	★ 3160
ADC-816MC	★ 3161
	2838-6
ADC-816MM	★ 3160
ADC-816MM	★ 3161
	2838-7
ADC-817	★ 3160
ADC-817	★ 3161
	844-40
ADC-817MC	★ 3160
ADC-817MC	★ 3161
	2839-40
ADC-817MM	★ 3160
ADC-817MM	★ 3161
	2839-41
ADC-825MC	★ 3160
ADC-825MC	★ 3161
	2833-40
ADC-825MM	★ 3160
ADC-825MM	★ 3161
	2833-41
ADC-826MC	★ 3160
ADC-826MC	★ 3161
ADC-826MC	★ 3162
	2838-14
ADC-826MM	★ 3160
ADC-826MM	★ 3161
ADC-826MM	★ 3162
	2838-15
ADC-827MC	★ 3160
ADC-827MC	★ 3162
	2839-48
ADC-827MM	★ 3160
ADC-827MM	★ 3162
	2839-49
ADC-830	★ 3157
ADC-830	★ 3162
	2835-21
ADC-84-10	★ 3161
	2838-22
ADC-84-12	★ 3161
	2840-21
ADC-847A	★ 3157
ADC-847A	★ 3162
	2836-39
ADC-847B	★ 3157
ADC-847B	★ 3162
	2833-15
ADC-85-10	★ 3161
ADC-85-12	★ 3161
	2840-22
ADC-856C	★ 3162
	2838-8
ADC-856M	★ 3162
	2838-9
ADC-85C-10	★ 3161
	2838-23
ADC-85C-12	★ 3161
	2840-23
ADC-868	844-43
ADC-87-10	2838-28
ADC-87-12	2840-24
ADC-EK10B	★ 3161
	2838-47
ADC-EK12B	★ 3161
	2843-3
ADC-EK12DC	★ 3161
	2846-13
ADC-EK8B	★ 3161
	2835-41
ADC-ET10BC	★ 3160
	2838-50
ADC-ET12BC	★ 3160
	2845-37
ADC-ET8BC	★ 3161
	2835-44
ADC-HC12BMC	★ 3160
ADC-HC12BMC	★ 3161
	2842-55
ADC-HC12BMM	★ 3160
ADC-HC12BMM	★ 3161
	2842-56
ADC-HS12BMC	★ 3160
ADC-HS12BMC	★ 3161
	2840-16
ADC-HS12BMM	★ 3160
ADC-HS12BMM	★ 3161
	2840-17
ADC-HU3	★ 3161
ADC-HX12BGC	★ 3160
ADC-HX12BGC	★ 3161
	2841-33
ADC-HX12BMM	★ 3160
ADC-HX12BMM	★ 3161
	2841-34
ADC-HZ12BGC	★ 3160
ADC-HZ12BGC	★ 3161
	2840-14
ADC-HZ12BMM	★ 3160
ADC-HZ12BMM	★ 3161
	2840-15
ADC-MC8BC	★ 3161
	2837-43
AM-1435C	★ 3158
AM-1435C	★ 3160
AM-1435C	★ 3163
	3351-6
AM-1435M	★ 3158
AM-1435M	★ 3160
AM-1435M	★ 3163
	3351-7
AM-1435MC	★ 3158
AM-1435MC	★ 3160
AM-1435MC	★ 3163
	3331-39
AM-1435MM	★ 3158
AM-1435MM	★ 3160
AM-1435MM	★ 3163
	3331-40
AM-1435MR	★ 3158
AM-1435MR	★ 3160
AM-1435MR	★ 3163
	3331-41
AM-427-A	★ 3163
	3339-33
AM-427-B	★ 3163
	3337-12
AM-430	★ 3163
	3330-140
AM-430A	★ 3163
	3343-39
AM-430B	★ 3163
	3341-20
	3340-61
AM-450-2	★ 3163
	3356-50
AM-452-2	★ 3163
	3357-66
AM-460-2	★ 3163
	3352-49
AM-462-1	3352-52
AM-462-1M	3352-53
AM-500	★ 3160
AM-500	★ 3163
	3330-127
AM-500GC	★ 3160
AM-500GC	★ 3163
	3331-17
	3334-250
	3346-201
AM-500MC	★ 3160
AM-500MC	★ 3163
	(Continued)
AM-500MC	3331-18
AM-500MC	3334-251
AM-500MC	3346-202
AM-500MM	★ 3160
AM-500MM	★ 3163
	3331-19
	3334-255
AM-500MR	★ 3160
AM-500MR	★ 3163
	3331-20
	3334-256
AM-542MC	★ 3160
AM-542MC	★ 3163
	3306-111
	3337-50
AM-542MR	★ 3160
AM-542MR	★ 3163
	3306-112
	3337-44
AM-543MC	★ 3160
AM-543MC	★ 3163
	3306-113
	3337-35
AM-543MR	★ 3160
AM-543MR	★ 3163
	3306-114
	3337-33
AM-551	★ 3158
AM-551	★ 3160
AM-551	★ 3163
AM-7650	★ 3158
AM-7650	★ 3163
	3341-6
DAC-0405	843-142
DAC-0405	2849-12
DAC-0605	843-161
DAC-0605	2850-9
DAC-0805	844-25
DAC-0805	2855-37
DAC-08BC	★ 3162
	2852-20
DAC-08BM	★ 3162
	2852-21
DAC-562C	★ 3162
	2862-30
DAC-608	★ 3157
DAC-608	★ 3162
	2854-10
DAC-610	★ 3157
DAC-610	★ 3162
	2858-20
DAC-612	★ 3157
DAC-612	★ 3162
	2866-18
DAC-7523	★ 3162
	2852-40
DAC-7533	★ 3162
	2858-17
DAC-7541	★ 3162
	2863-41
DAC-8308	2854-6
DAC-8318	2854-7
DAC-85C-CBI-I	2862-11
DAC-85C-CBI-V	2864-37
DAC-87C-CBI-I	2862-12
DAC-87C-CBI-V	2864-38
DAC-HA10BC	★ 3160
DAC-HA10BC	★ 3162
	2860-12
DAC-HA10BC-1	★ 3160
DAC-HA10BC-1	★ 3162
	2860-10
DAC-HA10BM	★ 3160
DAC-HA10BM	★ 3162
	2860-13
DAC-HA10BM-1	★ 3160
DAC-HA10BM-1	★ 3162
	2860-11
DAC-HA12BC	★ 3160
DAC-HA12BC	★ 3162
	2862-52
DAC-HA12BC-1	★ 3160
DAC-HA12BC-1	★ 3162
	2862-54
DAC-HA12BM	★ 3160
DAC-HA12BM	★ 3162
	2862-53
DAC-HA12BM-1	★ 3160
DAC-HA12BM-1	★ 3162
	2862-55

¶ Indicates page number in Application Note Directory.
★ Indicates additional data is provided on the page noted.

Datel (Cont'd)

Device	Page-Line
DAC-HA12DC	★ 3160
DAC-HA12DC	★ 3162
	2870-6
DAC-HA12DC-1	★ 3160
DAC-HA12DC-1	★ 3162
	2870-4
DAC-HA12DM	★ 3160
DAC-HA12DM	★ 3162
	2870-7
DAC-HA12DM-1	★ 3160
DAC-HA12DM-1	★ 3162
	2870-5
DAC-HA14BC	★ 3160
DAC-HA14BC	★ 3162
	2870-38
DAC-HA14BC-1	★ 3160
DAC-HA14BC-1	★ 3162
	2870-40
DAC-HA14BM	★ 3160
DAC-HA14BM	★ 3162
	2870-39
DAC-HA14BM-1	★ 3160
DAC-HA14BM-1	★ 3162
	2870-41
DAC-HF10	★ 3162
	844-35
DAC-HF10BMC	★ 3162
	2856-30
DAC-HF10BMM	★ 3162
	2856-31
DAC-HF12BMC	★ 3160
DAC-HF12BMC	★ 3162
	2861-37
DAC-HF12BMM	★ 3160
DAC-HF12BMM	★ 3162
	2861-38
DAC-HF8BMM	★ 3160
DAC-HF8BMM	★ 3162
	2851-42
DAC-HFBMC	2851-43
DAC-HK12BGC	★ 3160
DAC-HK12BGC	★ 3162
	2864-43
DAC-HK12BGC-2	★ 3160
DAC-HK12BGC-2	★ 3162
	2864-44
DAC-HK12BMM	★ 3160
DAC-HK12BMM	★ 3162
	2864-45
DAC-HK12BMM-2	★ 3160
DAC-HK12BMM-2	★ 3162
	2864-46
DAC-HK12DGC	★ 3160
DAC-HK12DGC	★ 3162
	2869-46
DAC-HK12DMM	★ 3160
DAC-HK12DMM	★ 3162
	2869-47
DAC-HP16BMC	★ 3160
DAC-HP16BMC	★ 3162
	2872-39
DAC-HP16BMC-1	★ 3160
DAC-HP16BMC-1	★ 3162
	2872-40
DAC-HP16BMM	★ 3160
DAC-HP16BMM	★ 3162
	2872-41
DAC-HP16BMM-1	★ 3160
DAC-HP16BMM-1	★ 3162
	2872-42
DAC-HP16DGC	★ 3160
DAC-HP16DGC	★ 3162
	2873-13
DAC-HP16DMC	★ 3160
DAC-HP16DMC	★ 3162
	2873-14
DAC-HP16DMM	★ 3160
DAC-HP16DMM	★ 3162
	2873-15
DAC-HZ12BGC	★ 3160
DAC-HZ12BGC	★ 3162
	2865-4
DAC-HZ12BMM	★ 3160
DAC-HZ12BMM	★ 3162
	2865-5
DAC-HZ12DGC	★ 3160
DAC-HZ12DGC	★ 3162
	2869-48

Device	Page-Line
DAC-HZ12DMC	★ 3160
DAC-HZ12DMC	★ 3162
	2869-49
DAC-HZ12DMM	★ 3160
DAC-HZ12DMM	★ 3162
	2869-50
DAC-IC10B	★ 3162
	2860-5
DAC-IC10BC	★ 3162
	2858-25
DAC-IC8BC	★ 3162
	2852-54
DAC-UP10B	★ 3162
	2859-10
DAC-UP8BC	★ 3162
	2853-28
DAC-UP8BM	★ 3162
	2853-29
DAS-952R	★ 3163
	3399-52
FLT-U2	★ 3163
	3398-22
HDAS-16MC	★ 3160
HDAS-16MC	★ 3163
	2840-18
	★ 3160
	★ 3163
	3399-50
HDAS-16MM	★ 3160
HDAS-16MM	★ 3163
	3399-51
HDAS-8MC	★ 3160
HDAS-8MC	★ 3163
	2840-19
	★ 3160
	★ 3163
	3399-3
HDAS-8MM	★ 3160
HDAS-8MM	★ 3163
	3399-4
MV-1606	★ 3163
	2831-57
MV-808	★ 3163
	2830-106
MVD-409	★ 3163
	2829-36
MVD-807	★ 3163
	2831-1
MX-1606	★ 3163
	2831-89
MX-1616	★ 3159
MX-1616	★ 3163
	2831-86
MX-1616M	★ 3159
MX-1616M	★ 3163
	2831-87
MX-808	★ 3163
	2830-174
MX-808M	★ 3163
	2830-175
MXD-409	★ 3163
	2830-71
MXD-807	★ 3163
	2831-30
RP2X04	2896-42
SHM-20C	★ 3159
SHM-20C	★ 3163
	3403-182
SHM-20M	★ 3159
SHM-20M	★ 3163
	3403-183
SHM-4860M	★ 3159
SHM-4860M	★ 3160
	3403-184
SHM-4860C	3403-185
SHM-6MM	★ 3160
SHM-6MM	★ 3163
	3404-1
SHM-7MC	★ 3163
	3404-2
SHM-7MR	★ 3163
	3404-3
SHM-HUMC	★ 3163
	3404-4
SHM-HUMM	★ 3160
	3404-5
SHM-HUMR	★ 3163
SHM-IC-1	★ 3163
	3404-6
SHM-IC-1M	3404-7
SHM-LM-2	★ 3163
	3404-8

Device	Page-Line
SHM4860	★ 3163
VFQ-1	★ 3163
	3405-69
VFV-100K	3405-97
VFV-10K	3405-98
VI-7660C	★ 3163
	3405-32
VI-7660M	★ 3163
	3405-33
VR-182A	3402-30
VR-182B	3402-31
VR-182C	3402-32

Dense-Pac

Device	Page-Line
DEP40192	3813-92
DPD10V24	★ 4008
	3828-55
DPD2V56	★ 4008
	3828-15
DPD3V20	★ 4008
	3828-23
DPD411M	★ 4008
	3830-48
DPD4256	★ 4008
	3828-87
DPD42568	★ 4008
	3829-102
DPD42569	★ 4008
	3830-8
DPD44256	★ 4008
	3829-82
DPD4464	★ 4008
	3827-99
DPD45256	★ 4008
	3829-98
DPD4848	★ 4008
	3828-24
DPD4849	★ 4008
	3828-42
DPD5124	★ 4008
	3830-38
DPE1124	★ 4008
	3813-105
	3813-109
DPE1224	★ 4008
	3813-104
	3813-108
DPE1MX8	★ 4008
	3813-112
	3813-113
DPE40128	★ 4008
	3813-88
DPE40192	★ 4008
DPE40256	★ 4008
	3813-95
DPE4064	★ 4008
	3813-19
DPE41128	★ 4008
	3813-89
DPE41192	★ 4008
	3813-93
DPE41256	★ 4008
	3813-96
DPE41288	★ 4008
	3813-107
DPE4164	★ 4008
	3813-20
DPE4328	★ 4008
	3813-97
DPE45128	★ 4008
	3813-110
	3813-111
DPE4648	★ 4008
	3813-103
DPE4968	★ 4008
	3813-106
DPN18	★ 4008
	3812-1
DPN28	★ 4008
	3812-65
DPN88	★ 4008
	3813-1
DPS1024	★ 4008
	3847-81
	3847-97
	3848-10
DPS1025	★ 4008
	3847-95
DPS1026	★ 4008
	3847-80
	(Continued)

Device	Page-Line
DPS1026	**3847-96**
DPS1026	**3848-9**
DPS1124	★ 4008
	3847-89
	3847-105
DPS1125	★ 4008
	3847-90
	3847-106
DPS1152	★ 4008
	3847-82
	3847-91
	3848-1
DPS1224	★ 4008
	3847-88
	3847-104
DPS128KU	★ 4008
	3845-108
DPS1616	★ 4008
	3845-119
DPS166167	★ 4008
	3847-93
	3848-8
DPS16X4	3844-119
DPS16X6	3845-105
DPS256KB	3846-10
DPS256KU	★ 4008
	3845-117
	3846-36
	3847-68
DPS266	★ 4008
	3845-118
DPS2864	★ 4008
	3843-53
DPS288KU	★ 4008
	3846-28
	3846-81
DPS32H8	★ 4008
	3846-49
DPS40128	★ 4008
	3845-110
DPS40256	★ 4008
	3846-50
DPS4064	★ 4008
	3843-27
DPS41128	★ 4008
	3845-111
DPS41192	★ 4008
	3846-34
DPS41256	★ 4008
	3845-112
DPS41288	★ 4008
	3847-102
DPS4164	★ 4008
	3843-28
DPS4328	★ 4008
	3846-55
DPS45128	★ 4008
	3848-15
	3848-17
DPS4648	★ 4008
	3847-77
DPS4968	★ 4008
	3847-92
DPS5122	★ 4008
	3848-16
	3848-18
DPS7M464	★ 4008
	3844-118
DPS8164	★ 4008
	3846-103
DPS8256	★ 4008
	3848-4
DPS82M56	★ 4008
	3848-7
DPS8444	★ 4008
	3847-67
DPS84H08	★ 4008
	3842-113
DPS8524	★ 4008
	3847-74
DPS86M44	★ 4008
	3847-66
DPS88H04	★ 4008
	3842-105
DPS88H08	★ 4008
	3842-118
DPS88H16	★ 4008
	3845-107
DPV10248	★ 4008
	3825-24
DPV1256	★ 4008
	3825-19

Device	Page-Line
DPV12816	★ 4008
	3825-16
DPV12832	★ 4008
	3825-17
DPV1288	★ 4008
	3825-15
DPV25616	★ 4008
	3825-20
DPV25632	★ 4008
	3825-21
DPV2568	★ 4008
	3825-18
DPV27512	★ 4008
	3824-101
DPV51216	★ 4008
	3825-23
DPV5128	★ 4008
	3825-22
DPV6432	★ 4008
	3825-12
DPX128KU	★ 4008
	3845-114
DPX16X4	★ 4008
	3845-99
DPX16X5	★ 4008
	3845-106
DPX256KU	★ 4008
	3846-9
	3846-53
	3847-73
DPX288KU	★ 4008
	3846-29
	3846-54
DPX7M464	★ 4008
	3845-98
DPX8164	★ 4008
	3847-62
DX166167	3847-94

Elantec

Device	Page-Line
EDH0006	★ 3537
	2898-139
EDH0008	★ 3538
	2898-143
EH2512	3357-59
EHA2500	★ 3538
	3353-25
EHA2502	★ 3538
	3356-48
EHA2505	★ 3538
	3356-49
EHA2510	★ 3538
	3356-42
EHA2512	★ 3538
EHA2515	★ 3538
	3357-64
EHA2520	★ 3538
	3356-43
EHA2522	★ 3538
	3357-61
EHA2525	★ 3538
	3357-68
EHA2600	★ 3538
	3350-11
EHA2602	★ 3538
	3352-44
EHA2605	★ 3538
	3352-45
EHA2620	★ 3538
	3350-13
EHA2622	★ 3538
	3352-46
EHA2625	★ 3538
	3352-47
EL2003	★ 3537
EL2003	★ 3539
	3308-28
EL2004	★ 3537
EL2004	★ 3540
	3357-30
EL2004C	★ 3537
EL2004C	★ 3540
	3357-154
EL2005	★ 3537
EL2005	★ 3541
	3351-13
EL2005C	★ 3537
EL2005C	★ 3541
	3357-12

Device	Page-Line
EL2006	★ 3537
EL2006	★ 3542
	3346-27
EL2006C	★ 3537
EL2006C	★ 3542
	3352-9
EL2007	★ 3537
EL2007	★ 3543
	2895-123
EL2009	★ 3537
	3357-32
EL2009C	★ 3537
	3357-161
EL2017	★ 3537
EL2017	★ 3543
	3404-102
ELH0002	★ 3537
	3306-25
ELH0002C	★ 3537
	3306-26
ELH0021	★ 3537
	3330-86
	3346-224
ELH0021C	★ 3537
	3330-90
	3355-48
ELH0032	★ 3537
	3331-30
	3334-233
	3352-15
ELH0032C	★ 3537
	3331-31
	3334-234
	3352-16
ELH0033	★ 3537
	3329-4
ELH0033C	★ 3537
	3329-13
ELH0041	★ 3537
	3330-102
	3346-221
ELH0041C	★ 3537
	3330-103
	3355-44
ELH0101	★ 3537
	3330-76
	3357-38
ELH0101A	★ 3537
	3330-77
	3346-197
ELH0101AC	★ 3537
	3330-78
	3346-198
ELH0101C	★ 3537
	3330-79
	3357-39

Electrical Engineering Software

Device	Page-Line
Precise	4949-2
Precise	★ 5110

Exar Corporation

Device	Page-Line
30015	★ 4618
	4442-2
30030	★ 4618
	4442-6
30045	★ 4618
	4442-9
30080	★ 4618
	4442-11
30155	★ 4618
	4442-12
30300	★ 4618
	4442-13
PROPRIETARY	4466-2
PROPRIETARY	4466-4
PROPRIETARY	4466-6
PROPRIETARY	4466-8
XR-212ACS	¶ 414-4
XR-212AS	¶ 414-5
XR-2206	¶ 412-3
XR-3870	1411-29
XR-3872	1411-30
XR-38C70	1411-31
XR-38E70	1411-32
XR-38XX	1813-10

Arranged alphanumerically from left to right.

ADVERTISERS' PRODUCT INDEX

Exar Corporation (Cont'd)

Device	Page-Line
XR-A100	★ **4615**
	4462-29
XR-B100	★ **4615**
	4462-30
XR-C100	★ **4615**
	4462-27
XR-C240	¶ 414-6
XR-C262	¶ 412-2
XR-C277	¶ 411-15
XR-C409	¶ 359-10
XR-CA600	4462-39
XR-CMA	★ **4618**
	4442-1
XR-CMB	★ **4618**
	4442-4
XR-CMC	★ **4618**
	4442-5
XR-CMD	★ **4618**
	4442-8
XR-D100	★ **4615**
	4462-28
XR-E100	★ **4615**
	4462-31
XR-F100	★ **4615**
	4462-38
XR-G100	★ **4615**
	4462-34
XR-H100	★ **4615**
	4462-35
XR-IIL-CHIP	¶ 359-8
XR-J100	★ **4615**
	4462-33
XR-L100	★ **4615**
	4462-37
XR-M100	★ **4615**
	4462-41
XR-T5680	¶ 412-16
XR-T6420-1	¶ 413-10
XR-T6421	¶ 413-10
XR-U100	★ **4615**
	4462-36
XR-V100	★ **4615**
	4462-40
XR-W100	★ **4615**
	4462-42
XR-X100	4462-32
XR082	★ **3555**
	3366-38
XR082C	★ **3555**
	3368-45
XR082M	★ **3555**
	3366-39
XR083	★ **3555**
	3366-40
XR083C	★ **3555**
	3368-46
XR083M	★ **3555**
	3366-41
XR084	3372-17
	¶ 423-4
XR084C	3373-52
XR084M	3372-18
XR094	3372-25
XR094C	3374-2
XR094M	3372-26
XR095	3372-27
XR095C	3374-3
XR095M	3372-28
XR096	3372-23
XR096C	3374-1
XR096M	3372-24
XR1310	3322-107
XR13600	3320-140
XR14412	¶ 411-17
XR14412F	★ **3548**
	3380-64
XR14412V	★ **3548**
	3380-65
XR1458	3330-1
XR1458	3367-6
XR146	3334-66
XR146	3353-22
XR1468	3392-82
XR1488	★ **3560**
	2881-40
XR1489A	★ **3561**
	2885-27
XR1524	★ **3558**
	3395-89
XR1525A	★ **3559**
	3395-90
XR1527A	3395-91
XR1543	★ **3559**
	3401-88
XR1568	3392-83
XR200	★ **4615**
XR200	★ **4618**
	4442-3
XR2001C	3310-86
XR2002C	3310-87
XR2003C	3310-88
XR2003M	2894-72
XR2004C	3310-89
XR2011C	3310-90
XR2012C	3310-91
XR2013C	3310-92
XR2014C	3310-93
XR205	3376-35
XR210	★ **3544**
	3375-22
	¶ 412-3
	¶ 423-14
XR2103	★ **3547**
	3380-30
XR210M	★ **3544**
	3375-23
XR2120	★ **3547**
	3380-33
	¶ 411-17
XR2121	★ **3548**
	3380-24
XR2122	★ **3549**
	3380-23
XR2123	★ **3549**
	3380-22
	¶ 411-17
XR2125	★ **3550**
	3380-25
XR2126	★ **3550**
	3380-36
XR2129	★ **3550**
	3380-40
XR215	3375-35
	¶ 415-8
	¶ 423-10
	¶ 423-14
XR215M	3375-36
XR2200	2894-49
XR2200M	2894-50
XR2201	2894-101
XR2201	3310-94
XR2201M	2894-102
XR2201M	3310-95
XR2202	2894-119
XR2202	3310-96
XR2202M	2894-120
XR2202M	3310-97
XR2203	2894-73
XR2203	3310-98
XR2203M	3310-99
XR2204	2894-53
XR2204	3310-100
XR2204M	2894-54
XR2204M	3310-101
XR2206	★ **3553**
	3376-36
	3376-37
	3380-56
	3380-57
	¶ 395-2
	¶ 396-8
	¶ 396-15
	¶ 421-1
XR2206C	★ **3553**
	3376-38
XR2206M	★ **3553**
	3376-39
	3380-58
XR2207	3376-23
XR2207	3380-59
	¶ 396-8
	¶ 416-2
	¶ 423-8
XR2207C	3376-24
XR2207M	3380-60
XR2208	3400-125
	¶ 421-3
	¶ 423-7
	¶ 423-8
XR2208M	3400-126
XR2209C	★ **3553**
	3376-25
XR2209M	★ **3553**
	3376-26
XR2211	¶ 390-10
XR2211	¶ 395-2
XR2211	¶ 396-8
XR2211	¶ 396-15
XR2211	¶ 421-3
XR2211C	★ **3544**
	3375-24
	3375-141
	3381-109
XR2211M	★ **3544**
	3375-25
	3375-142
	3380-55
	3381-110
XR2212	¶ 415-8
XR2212	¶ 422-17
XR2212	¶ 423-2
XR2212	¶ 423-4
XR2212M	★ **3545**
	3375-26
XR2213	¶ 423-7
XR2213C	★ **3545**
	3375-143
XR2213M	★ **3545**
	3375-144
XR2216	3377-161
XR2228	3400-127
	¶ 415-8
XR2228M	3400-128
XR2230	★ **3560**
	3395-92
	3401-144
XR2235	3395-93
XR2240	¶ 416-2
XR2240	¶ 428-15
XR2240C	3383-16
XR2240M	3383-17
XR2242C	3383-66
XR2242M	3383-67
XR2243	3383-9
XR2247	3306-69
XR2264	3404-104
XR2265	3404-105
XR2266	3404-106
XR2271	2877-11
XR2272	2877-9
XR2276	2874-26
XR2276	3400-79
XR2277	2874-23
XR2278	2874-24
XR2279	2874-25
XR2284	2876-52
XR2288	2877-24
XR246	3334-67
XR2524	3395-94
XR2525A	3395-95
XR2527A	3395-96
XR2543	3401-89
XR2556C	3383-96
XR2556M	3383-97
XR2567	3381-131
	¶ 411-14
XR2567C	3376-53
XR2567M	3376-54
XR2567M	3381-132
XR2917	★ **3552**
	3328-48
	3399-104
XR300	★ **4618**
	4442-7
XR320	3383-5
	¶ 423-2
	¶ 423-4
XR3403	3334-168
	¶ 404-1
XR3448	★ **3551**
	1467-82
XR346	3334-68
XR346-2	3372-47
XR3470A	★ **3552**
	3306-65
XR3470B	★ **3552**
	3306-66
XR3471	★ **3551**
	1467-86
XR3503	3334-169
XR3524	★ **3558**
	3395-97
XR3525A	3395-98
XR3527A	★ **3559**
	3395-99
XR3543	3401-90
XR3870	1453-15
XR3870	1411-33
XR3872	1453-5
XR3872	1417-1
XR38E70	1453-1
XR38E70	1453-16
XR38E70	1417-2
XR38P70	1453-2
XR38XX	2013-14
XR400	★ **4618**
	4462-43
XR4136	¶ 404-1
XR4136C	3372-49
XR4136M	3371-54
XR4151	★ **3561**
	3405-99
	¶ 422-17
XR4194M	3395-54
XR4195	3392-84
XR4202	3334-69
	¶ 404-1
XR4202M	3334-70
XR4212	3319-74
XR4212C	3372-46
XR4212M	3371-50
XR4558	3367-30
	¶ 404-1
XR4560	★ **3555**
	3367-37
XR4739	3319-39
XR4739	3367-34
XR4739M	3319-40
XR4741C	3371-46
XR4741M	3370-46
XR494	★ **3557**
	3395-100
XR495	★ **3558**
	3395-101
XR500	★ **4618**
	4442-10
XR5332	★ **3556**
XR5532	3363-88
XR5532A	3363-89
XR5533	★ **3556**
	3363-90
XR5533A	★ **3556**
	3363-91
XR5534	★ **3557**
	3350-43
XR5534A	★ **3557**
	3350-44
XR5534C	★ **3557**
	3350-45
XR5534M	★ **3557**
	3346-131
XR555C	3383-31
XR555M	3383-32
XR556C	3383-75
XR556M	3383-76
XR558C	3383-98
XR558M	3383-99
XR559C	3383-104
XR559M	3383-105
XR567	¶ 411-14
XR567AC	★ **3546**
	3375-145
	3381-111
XR567AM	★ **3546**
	3375-146
	3381-112
XR6118	★ **3554**
	2877-37
XR6128	★ **3554**
	2877-38
XR7000	★ **3562**
	3307-4
XR8038	★ **3554**
	3376-40
XR8038A	★ **3554**
	3376-41
XR8038M	★ **3554**
	3376-42
XR9201	2853-11
XRC240	3380-91
XRC262	★ **3563**
	3380-92
XRC277	★ **3564**
	3380-93
XRC587	3380-98
XRC588	3380-99
XRL555	3383-33
XRL556C	3383-77
XRL556M	3383-78
XRL567C	★ **3546**
	3375-147
XRL567M	★ **3546**
	3375-148
XRS200	3375-66
	¶ 423-14
XRT5600	★ **3564**
	3380-83
XRT5620	★ **3564**
	3380-84
XRT5640	3380-78
XRT5650	★ **3565**
	3380-81
XRT5660	3380-96
XRT5670	★ **3565**
	3377-33
XRT5680	3380-103
XRT5681	★ **3566**
	3380-102
XRT5682	3376-9
XRT5700	3380-85
XRT5720	3380-86
XRT5740	3380-79
XRT5750	3380-82
XRT5760	3380-97
XRT5990	3378-59
XRT5992	3378-70
XRT6420	★ **3566**
	3381-27
XRT6421	3381-28
XRT6425	3381-26
XRT8205	3382-29

Fairchild

Device	Page-Line
0026	2892-111
11C01C	849-105
11C05C	849-78
11C05M	849-79
11C06C	849-96
11C06M	849-97
11C70C	849-93
11C90C	849-87
11C90C	3376-67
11C90M	849-88
11C90M	3376-68
11C91C	849-85
11C91C	3376-56
11C91M	849-86
11C91M	3376-57
16P8B	4469-68
16RP4B	4469-69
16RP6B	4469-70
16RP8B	4469-71
21021	3835-11
21021M	3835-12
21022	3835-18
21022M	3835-19
2102F	3835-4
2102FM	3835-5
2102H	3834-115
2102HM	3834-116
2102L1	3835-13
2102L1M	3835-14
2102L2	3835-20
2102L2M	3835-21
2102LF	3835-6
2102LFM	3835-7
2102LH	3834-117
2102LHM	3834-118
2114	3836-127
2114-2	3836-67
2114-3	3836-103
2114-3M	3836-104
2114L	3837-1
2114L-2	3836-68
2114L-3	3836-105
2114M	3837-2
21L021	3835-15
21L022	3835-22
21L02F	3835-8
21L02H	3834-119
29F01	★ **1028**
	844-82
29F01C	★ **1028**
	856-1
29F01M	★ **1028**
	856-2
29F10C	★ **1028**
	1462-100
29F10M	★ **1028**
	1462-101
29F516	★ **1026**
29F52C	★ **1024**
29F52C	★ **5310**
	1449-78
29F52M	★ **1024**
29F52M	★ **5310**
	1449-79
29F53C	★ **1024**
29F53C	★ **5310**
	1449-80
29F53M	★ **1024**
29F53M	★ **5310**
	1449-81
29F68	★ **1027**
3245	2893-8
3262A	3324-61
3262B	3324-62
3341	3809-37
3341A	3809-41
3341M	3809-38
3342	3857-18
3347	3857-23
3348	3856-117
3349	3856-118
3351-3	3809-34
33511	3809-35
33512	3809-31
3351M	3809-32
3357-1	3857-31
3357-2	3857-24
3708	2830-199
5116	3377-140
5151	3377-141
5156	3377-45
5400	★ **609**
5400	★ **616**
5400	★ **622**
5400	★ **623**
	870-183
5401	871-133
5402	★ **609**
5402	★ **616**
5402	★ **622**
5402	★ **623**
	865-89
5403	871-134
5404	★ **609**
5404	★ **616**
5404	★ **622**
5404	★ **623**
	857-75
5405	857-137
5406	864-106
5407	864-86
5408	★ **609**
5408	★ **616**
5408	★ **622**
5408	★ **623**
	869-71
5409	★ **609**
5409	★ **616**
5409	★ **622**
5409	★ **623**
	869-132
5410	★ **609**
5410	★ **616**
5410	★ **622**
5410	★ **623**
	870-107
54104	867-90
54105	867-91
54107	867-151
5411	868-176
5412	870-164
54121	★ **609**
54121	★ **616**
54121	★ **622**
54121	★ **623**
	880-93
54122	★ **609**
54122	★ **616**
54122	★ **622**
54122	★ **623**
	880-111

¶ Indicates page number in Application Note Directory.
★ Indicates additional data is provided on the page noted.

Fairchild (Cont'd)

Device	Page-Line
54123	★ **609**
54123	★ **616**
54123	★ **622**
54123	★ **623**
	880-141
54125	★ **616**
	856-89
54126	856-116
5413	887-98
54132	887-144
5414	★ **616**
	888-22
54141	2876-27
54145	862-97
54150	★ **616**
	880-75
54151	★ **609**
54151	★ **616**
54151	★ **622**
54151	★ **623**
	879-153
54152	880-18
54153	★ **609**
54153	★ **616**
54153	★ **622**
54153	★ **623**
	877-116
54154	★ **616**
	863-166
54155	863-69
54156	863-38
54157	★ **609**
54157	★ **616**
	878-157
5416	864-95
54160	860-133
54161	★ **616**
	858-119
54162	860-179
54163	858-172
54164	★ **616**
	881-166
	★ **616**
	3856-39
54165	★ **617**
	882-43
	★ **617**
	3855-110
54166	882-61
54166	3855-118
54167	887-67
5417	864-77
54170	★ **617**
	876-153
	★ **617**
	3830-78
54173	★ **617**
	866-1
54174	★ **609**
54174	★ **617**
54174	★ **622**
54174	★ **623**
	866-24
54175	★ **609**
54175	★ **617**
54175	★ **622**
54175	★ **623**
	864-260
54176	860-100
54177	858-73
54178	881-86
54178	3854-46
54179	881-92
54179	3854-47
54180	889-1
54181	855-18
54182	855-83
54190	861-150
54191	★ **617**
	859-157
54192	861-115
54193	860-15
54194	881-119
54194	3854-48
54195	881-23
54195	3854-72
54196	860-101
54197	858-74
54198	882-25
54198	3855-76
54199	882-31
54199	3855-77
5420	★ **609**
5420	★ **616**
5420	★ **622**
5420	★ **623**
	869-167
5421	868-139
5422	870-79
5423	865-12
5425	★ **616**
	865-3
5426	864-33
5427	865-34
54279	★ **617**
	875-73
54283	856-19
54293	859-44
54298	★ **617**
	879-75
5430	★ **609**
5430	★ **616**
5430	★ **622**
5430	★ **623**
	872-1
5432	★ **616**
	873-22
5437	★ **609**
5437	★ **616**
5437	★ **622**
5437	★ **623**
	871-47
5438	871-82
5440	★ **609**
5440	★ **616**
5440	★ **622**
5440	★ **623**
	870-35
5442	★ **609**
5442	★ **616**
5442	★ **622**
5442	★ **623**
	862-113
5443	862-66
5444	862-63
5445	862-88
5446	2875-131
5447	2875-100
5448	2875-59
5449	2875-38
5450	872-115
5451	★ **616**
	872-75
5453	872-162
5454	872-155
5460	872-129
5470	867-72
5472	867-81
5473	★ **616**
	867-152
5474	★ **609**
5474	★ **616**
5474	★ **622**
5474	★ **623**
	864-207
5475	★ **616**
	875-32
5476	★ **616**
	868-22
5477	875-61
5480	854-160
5482	855-8
5483	★ **609**
5483	★ **616**
5483	★ **622**
5483	★ **623**
	856-20
5485	★ **616**
	854-43
5486	★ **609**
5486	★ **616**
5486	★ **622**
5486	★ **623**
	874-88
5490	★ **616**
	860-58
5491	882-100
5491	3856-67
5492	862-6
5493	859-45
5494	881-114
5494	3855-24
5495	★ **616**
	881-62
	★ **616**
	3854-49
5496	881-151
5496	3855-43
5497	★ **616**
	888-109
54AC00	★ **1011**
54AC00	★ **1013**
	825-44
54AC02	★ **1011**
54AC02	★ **1013**
	827-113
54AC04	★ **1011**
54AC04	★ **1013**
	810-176
54AC08	★ **1011**
	824-47
54AC10	★ **1011**
54AC10	★ **1013**
	824-172
54AC1010	★ **1012**
54AC1010	★ **1016**
	807-81
54AC1016	★ **1012**
54AC1016	★ **1016**
	807-127
54AC1017	★ **1012**
54AC1017	★ **1016**
	807-131
54AC109	★ **1011**
54AC109	★ **1013**
	822-171
54AC11	★ **1011**
54AC11	★ **1013**
	823-193
54AC138	★ **1011**
54AC138	★ **1015**
	817-178
54AC139	★ **1011**
54AC139	★ **1015**
	817-90
54AC14	★ **1011**
54AC14	★ **1013**
	839-10
54AC151	★ **1011**
54AC151	★ **1015**
	833-24
54AC153	★ **1011**
54AC153	★ **1015**
	831-137
54AC157	★ **1011**
54AC157	★ **1015**
	832-56
54AC158	★ **1011**
54AC158	★ **1015**
	832-98
54AC160	★ **1011**
54AC160	★ **1014**
	814-161
54AC161	★ **1011**
54AC161	★ **1014**
	811-172
54AC163	★ **1011**
54AC163	★ **1014**
	811-116
54AC169	★ **1011**
54AC169	★ **1014**
54AC174	★ **1011**
54AC174	★ **1013**
	820-176
54AC175	★ **1011**
54AC175	★ **1013**
	820-84
54AC191	★ **1011**
54AC191	★ **1014**
	812-36
54AC20	★ **1011**
54AC20	★ **1013**
	824-114
54AC240	★ **1011**
54AC240	★ **1014**
	839-56
54AC241	★ **1011**
54AC241	★ **1014**
	839-139
54AC244	★ **1011**
54AC244	★ **1014**
	840-60
54AC245	★ **1011**
54AC245	★ **1015**
	841-100
54AC251	★ **1011**
54AC251	★ **1015**
	833-102
54AC253	★ **1011**
54AC253	★ **1015**
	832-33
54AC257	★ **1011**
54AC257	★ **1015**
	832-132
54AC258	★ **1011**
54AC258	★ **1015**
	832-165
54AC273	★ **1011**
54AC273	★ **1013**
	821-50
54AC299	★ **1011**
54AC299	★ **1014**
	836-141
54AC32	★ **1011**
54AC32	★ **1013**
	826-123
54AC323	★ **1011**
54AC323	★ **1014**
54AC373	★ **1012**
54AC373	★ **1013**
	829-99
54AC374	★ **1012**
54AC374	★ **1013**
	822-34
54AC377	★ **1012**
54AC377	★ **1013**
54AC378	★ **1013**
54AC379	★ **1012**
54AC379	★ **1013**
54AC520	★ **1012**
	806-147
54AC521	★ **1012**
	806-124
54AC540	★ **1012**
54AC540	★ **1014**
	810-44
54AC541	★ **1012**
54AC541	★ **1014**
	810-45
54AC563	★ **1012**
54AC563	★ **1013**
	830-27
54AC564	★ **1012**
54AC564	★ **1013**
	821-125
54AC569	★ **1012**
54AC569	★ **1014**
54AC573	★ **1012**
54AC573	★ **1013**
	829-100
54AC574	★ **1012**
54AC574	★ **1013**
	822-35
54AC646	★ **1012**
54AC646	★ **1015**
	840-146
54AC648	★ **1012**
54AC648	★ **1015**
	840-99
54AC708	★ **1012**
54AC708	★ **1016**
54AC74	★ **1011**
54AC74	★ **1013**
	820-12
54AC86	★ **1011**
54AC86	★ **1013**
	828-19
54ACT1010	★ **1012**
54ACT1010	★ **1016**
	807-83
54ACT1016	★ **1016**
	807-129
54ACT1017	★ **1012**
54ACT1017	★ **1016**
	807-133
54ACT138	★ **1012**
54ACT138	★ **1015**
	817-180
54ACT240	★ **1012**
54ACT240	★ **1014**
	839-58
54ACT241	★ **1012**
54ACT241	★ **1014**
	839-141
54ACT244	★ **1012**
54ACT244	★ **1014**
	840-62
54ACT245	★ **1012**
54ACT245	★ **1015**
	841-102
54ACT373	★ **1012**
54ACT373	★ **1013**
	829-103
54ACT374	★ **1012**
54ACT374	★ **1013**
	822-38
54ACT563	★ **1012**
54ACT563	★ **1013**
	830-29
54ACT564	★ **1012**
54ACT564	★ **1013**
	821-127
54ACT573	★ **1012**
54ACT573	★ **1013**
	829-104
54ACT574	★ **1012**
54ACT574	★ **1013**
	822-39
54ACT708	★ **1012**
54ACT708	★ **1016**
54F00	★ **607**
54F00	★ **610**
54F00	★ **620**
54F00	★ **623**
54F00	★ **1021**
	871-11
54F02	★ **607**
54F02	★ **610**
54F02	★ **620**
54F02	★ **623**
54F02	★ **1021**
	874-13
54F04	★ **607**
54F04	★ **610**
54F04	★ **620**
54F04	★ **623**
54F04	★ **1021**
	857-102
54F08	★ **607**
54F08	★ **610**
54F08	★ **620**
54F08	★ **623**
54F08	★ **1021**
	869-97
54F10	★ **607**
54F10	★ **610**
54F10	★ **620**
54F10	★ **623**
54F10	★ **1021**
	870-131
54F109	★ **607**
54F109	★ **610**
54F109	★ **620**
54F109	★ **623**
54F109	★ **1021**
	867-119
54F11	★ **607**
54F11	★ **610**
54F11	★ **620**
54F11	★ **623**
54F11	★ **1021**
	869-15
54F112	★ **1021**
	868-81
54F113	★ **1021**
	868-49
54F114	★ **1021**
	868-115
54F13	★ **1021**
	887-109
54F132	★ **1021**
	887-155
54F138	★ **607**
54F138	★ **610**
54F138	★ **620**
54F138	★ **623**
54F138	★ **1025**
	863-108
54F139	★ **607**
54F139	★ **610**
54F139	★ **620**
54F139	★ **623**
54F139	★ **1025**
	863-6
54F14	★ **1021**
	888-33
54F146	★ **1028**
54F148	★ **1028**
	888-151
54F151	★ **610**
54F151	★ **1025**
	879-167
54F153	★ **607**
54F153	★ **610**
54F153	★ **620**
54F153	★ **623**
54F153	★ **1025**
	877-133
54F157	★ **610**
54F157	★ **1025**
	879-1
54F158	★ **610**
54F158	★ **1025**
	878-86
54F160A	★ **610**
54F160A	★ **1023**
	860-156
54F161A	★ **610**
54F161A	★ **1023**
	858-146
54F162A	★ **610**
54F162A	★ **1023**
	861-6
54F163A	★ **610**
54F163A	★ **1023**
	859-1
54F164	★ **610**
54F164	★ **1023**
	882-1
54F168	★ **1023**
	861-86
54F169	★ **1023**
	859-130
54F174	★ **610**
54F174	★ **1022**
	866-42
54F175	★ **607**
54F175	★ **610**
54F175	★ **620**
54F175	★ **623**
54F175	★ **1022**
	864-276
54F181	★ **1026**
	855-37
54F182	★ **1027**
	855-101
54F189	★ **610**
54F189	★ **1027**
	877-54
54F190	★ **610**
54F190	★ **1023**
	861-161
54F191	★ **610**
54F191	★ **1023**
	859-170
54F192	★ **610**
54F192	★ **1023**
	861-129
54F193	★ **610**
54F193	★ **1023**
	860-30
54F194	★ **610**
54F194	★ **1023**
	881-129
54F195	★ **1023**
	881-38
54F20	★ **607**
54F20	★ **610**
54F20	★ **620**
54F20	★ **623**
54F20	★ **1021**
	870-1
54F211	★ **1027**
	877-78
54F212	★ **1027**
	877-79
54F213	★ **1027**
	877-84
54F219	★ **610**
54F219	★ **1027**
	877-55

Arranged alphanumerically from left to right.

ADVERTISERS' PRODUCT INDEX

Fairchild (Cont'd)

Device	Page-Line
54F240	★ 607
54F240	★ 610
54F240	★ 620
54F240	★ 623
54F240	★ 1024
	883-139
	★ 607
	★ 610
	★ 620
	★ 623
	★ 1024
	2882-42
54F241	★ 607
54F241	★ 610
54F241	★ 620
54F241	★ 623
54F241	★ 1024
	884-22
54F242	★ 1024
	883-57
54F243	★ 610
54F243	★ 1024
	883-58
54F244	★ 607
54F244	★ 610
54F244	★ 620
54F244	★ 623
54F244	★ 1024
	884-77
54F245	★ 610
54F245	★ 1024
	885-85
54F251A	★ 610
54F251A	★ 1025
	880-44
54F253	★ 607
54F253	★ 610
54F253	★ 620
54F253	★ 623
54F253	★ 1025
	878-39
54F256	★ 1022
	875-15
54F257	★ 610
54F257	★ 1025
	879-40
54F258	★ 611
54F258	★ 1025
	878-126
54F259	★ 1022
	875-135
54F269	★ 1023
	859-131
54F273	★ 1022
	866-145
54F280	★ 607
54F280	★ 611
54F280	★ 620
54F280	★ 623
54F280	★ 1026
	889-17
54F283	★ 607
54F283	★ 611
54F283	★ 620
54F283	★ 623
54F283	★ 1025
	856-32
54F289	877-38
54F298	★ 1025
	879-83
54F299	★ 1023
	882-124
54F30240	★ 1024
54F30241	★ 1024
54F30244	★ 1024
54F3037	★ 1021
	888-17
54F3038	★ 1021
54F3040	★ 1021
	887-130
54F311	877-74
54F312	877-75
54F313	877-82
54F319	877-39
54F32	★ 607
54F32	★ 610
54F32	★ 620
54F32	★ 623
54F32	★ 1021
	873-45
54F321	★ 620
54F322	★ 611
54F322	★ 1023
	882-88
54F323	★ 1023
	882-125
54F333	★ 620
54F350	★ 1025
54F350	★ 1027
	843-119
54F352	★ 607
54F352	★ 611
54F352	★ 620
54F352	★ 623
54F352	★ 1025
	878-16
54F353	★ 607
54F353	★ 611
54F353	★ 620
54F353	★ 623
54F353	★ 1025
	877-99
54F365	★ 1024
	856-178
54F366	★ 1024
	858-9
	864-123
54F367	★ 1024
	856-179
54F368	★ 1024
	858-10
54F37	★ 1021
	871-61
54F373	★ 607
54F373	★ 611
54F373	★ 620
54F373	★ 623
54F373	★ 1022
	875-177
54F374	★ 607
54F374	★ 611
54F374	★ 620
54F374	★ 623
54F374	★ 1022
	867-1
54F377	★ 1022
	867-36
54F378	★ 611
54F378	★ 1022
	866-73
54F379	★ 1022
	864-320
54F38	★ 1021
	871-100
54F381	★ 1026
	855-38
54F382	★ 1026
	855-39
54F384	★ 1026
	843-19
54F385	★ 611
54F385	★ 1025
	854-5
54F395	★ 1023
	881-101
54F398	★ 611
54F398	★ 620
54F398	★ 623
54F398	★ 1022
54F398	★ 1025
	879-84
54F399	★ 611
54F399	★ 620
54F399	★ 623
54F399	★ 1022
54F399	★ 1025
	879-85
54F40	★ 1021
	870-48
54F401	★ 1028
	854-155
	★ 1028
	2878-8
54F402	★ 1022
54F402	★ 1028
	881-13
	★ 1022
	★ 1028
	2878-14
54F403	★ 1027
	3809-3
54F407	★ 1027
	876-131
54F410	★ 1022
54F410	★ 1027
	877-68
54F411	★ 1027
54F412	★ 611
54F412	★ 1022
	875-178
54F413	★ 1027
	3809-59
54F416	2878-25
54F418	2878-26
54F418	2879-3
54F420	★ 1027
	2878-27
54F430	2879-1
54F432	★ 1022
	875-179
54F433	★ 1027
	3809-60
54F492	2878-12
54F500	★ 1028
	2832-9
54F510	843-120
54F521	★ 611
54F521	★ 623
54F521	★ 1026
	854-100
54F524	★ 1026
	854-35
54F525	★ 1023
54F525	★ 1026
	862-31
	889-61
54F526	886-110
54F533	★ 607
54F533	★ 611
54F533	★ 623
54F533	★ 1022
	876-62
54F534	★ 611
54F534	★ 1022
	866-123
54F537	★ 1025
	862-148
54F538	★ 1025
	863-141
54F539	★ 1025
	863-62
54F540	★ 1024
	883-140
54F541	★ 1024
	884-23
54F543	★ 1024
	886-1
54F544	★ 1024
	886-2
54F545	★ 611
54F545	★ 1024
	885-86
54F547	★ 611
54F547	★ 1025
	863-93
54F548	★ 611
54F548	★ 1025
	863-94
54F550	★ 1024
	886-3
54F551	★ 1024
	886-4
54F552	★ 1024
	886-5
54F557	843-20
54F558	843-21
54F559	855-122
54F563	★ 1022
54F564	★ 1022
54F568	★ 1023
	861-73
54F569	★ 1023
	859-113
54F570	877-35
54F571	877-33
54F573	★ 1022
	875-180
54F574	★ 1022
	867-2
54F579	★ 1023
	859-114
54F582	★ 1026
54F583	★ 611
54F583	★ 1025
	854-163
54F588	★ 1024
	887-23
54F595	★ 1023
	882-92
54F597	★ 1023
	882-77
54F598	★ 1023
	882-78
54F604	★ 1022
	875-99
54F605	875-100
54F606	875-101
54F607	875-102
54F610	887-26
54F611	887-27
54F612	887-28
54F613	887-29
54F620	★ 1024
	886-90
54F621	★ 1024
	886-48
54F622	★ 1024
	886-49
54F623	★ 1024
	886-91
54F630	★ 1027
	2878-28
54F631	2878-29
54F632	★ 1027
54F64	★ 607
54F64	★ 610
54F64	★ 620
54F64	★ 623
54F64	★ 1021
	873-1
54F646	★ 1024
	886-6
54F648	★ 1024
	886-7
54F655	★ 1024
	858-51
54F656	★ 1024
	857-44
54F657	★ 1024
	885-146
54F673	★ 1023
	883-21
	★ 1023
	3856-99
54F674	★ 1023
	883-8
	★ 1023
	3856-100
54F675	★ 1023
	883-18
	★ 1023
	3856-101
54F676	★ 611
54F676	★ 1023
	883-15
	★ 611
	★ 1023
	3856-102
54F701	★ 1028
54F702	★ 1024
54F74	★ 607
54F74	★ 610
54F74	★ 620
54F74	★ 623
54F74	★ 1021
	864-225
54F779	★ 1023
	859-115
54F784	★ 1026
	843-22
54F821	★ 1022
	867-69
54F822	★ 1022
54F823	★ 1022
	867-61
54F825	★ 1022
	867-55
54F826	★ 1022
54F827	★ 1024
	857-70
54F828	★ 1024
	858-70
54F841	★ 1022
	876-120
54F843	★ 1022
	876-100
54F845	★ 1022
	876-82
54F85	★ 1026
	854-72
54F86	★ 610
54F86	★ 1021
	874-108
54H00	871-17
54H01	871-163
54H04	857-108
54H05	857-155
54H08	869-102
54H09	869-144
54H10	870-135
54H101	867-99
54H102	867-97
54H103	868-75
54H106	868-86
54H108	868-43
54H11	869-20
54H183	855-1
54H20	870-7
54H21	868-154
54H22	870-86
54H30	872-20
54H40	870-51
54H50	872-124
54H51	872-85
54H52	872-72
54H53	872-152
54H54	872-149
54H55	872-146
54H60	887-132
54H61	887-135
54H62	888-53
54H71	867-95
54H72	867-88
54H73	867-169
54H74	864-230
54H76	868-31
54H78	867-141
54H87	888-103
54HC00	825-49
54HC02	827-118
54HC07	808-145
54HC08	824-52
54HC10	824-178
54HC109	822-176
54HC112	823-71
54HC125	808-124
54HC132	838-141
54HC133	825-186
54HC138	818-6
54HC139	817-100
54HC14	811-80
54HC147	833-149
54HC147	833-153
54HC151	833-28
54HC153	833-77
54HC154	819-16
54HC160	814-166
54HC162	814-117
54HC163	811-121
54HC164	836-35
54HC165	835-181
54HC173	820-134
54HC175	820-89
54HC192	815-29
54HC193	812-40
54HC195	835-91
54HC20	824-118
54HC221	834-4
54HC240	839-71
54HC241	839-147
54HC242	838-81
54HC243	838-117
54HC244	840-68
54HC245	841-117
54HC251	833-78
54HC253	832-11
54HC257	832-135
54HC259	830-170
54HC27	827-57
54HC273	821-56
54HC280	808-34
54HC283	806-35
54HC299	836-146
54HC30	825-146
54HC32	826-128
54HC365	809-113
54HC366	809-183
54HC367	809-114
54HC368	809-184
54HC373	829-116
54HC374	822-55
54HC390	815-145
54HC393	812-173
54HC4017	814-69
54HC4020	813-163
54HC4040	813-120
54HC4046	833-164
54HC4047	833-165
54HC4049	809-19
54HC4050	809-63
54HC4051	842-85
54HC4052	838-56
54HC4053	838-62
54HC42	817-5
54HC4510	815-118
54HC4512	833-79
54HC4514	819-17
54HC4516	812-41
54HC4538	834-5
54HC4703	837-70
54HC533	830-42
54HC534	821-142
54HC543	842-17
54HC544	842-18
54HC550	842-35
54HC551	842-36
54HC563	830-43
54HC564	821-143
54HC568	815-142
54HC569	812-42
54HC573	829-117
54HC574	822-56
54HC640	841-6
54HC643	841-9
54HC645	840-93
54HC646	840-152
54HC648	840-106
54HC648	842-48
54HC688	806-105
54HC688	806-127
54HC74	820-17
54HC75	830-137
54HC76	822-177
54HC85	807-29
54HC86	828-24
54HCT04	811-26
54HCT07	808-149
54LS00	★ 607
54LS00	★ 612
54LS00	★ 621
54LS00	★ 623
	871-24
54LS02	★ 607
54LS02	★ 612
54LS02	★ 621
54LS02	★ 623
	874-18
54LS03	★ 607
54LS03	★ 612
54LS03	★ 621
54LS03	★ 623
	871-168
54LS04	★ 607
54LS04	★ 612
54LS04	★ 621
54LS04	★ 623
	857-113
54LS05	★ 607
54LS05	★ 612
54LS05	★ 621
54LS05	★ 623
	857-158
54LS08	★ 607
54LS08	★ 612
54LS08	★ 621
54LS08	★ 623
	869-108
54LS09	★ 612
	869-146
54LS10	★ 607
54LS10	★ 612
54LS10	★ 621
54LS10	★ 623
	870-140

¶ Indicates page number in Application Note Directory.
★ Indicates additional data is provided on the page noted.

Fairchild (Cont'd)

Device	Page-Line
54LS109	★ **608**
54LS109	★ **612**
54LS109	★ **621**
54LS109	★ **623**
	867-124
54LS11	★ **607**
54LS11	★ **612**
54LS11	★ **621**
54LS11	★ **623**
	869-25
54LS112	★ **608**
54LS112	★ **612**
54LS112	★ **621**
54LS112	★ **623**
	868-91
54LS113	★ **608**
54LS113	★ **612**
54LS113	★ **621**
54LS113	★ **623**
	868-54
54LS114	★ **608**
54LS114	★ **612**
54LS114	★ **621**
54LS114	★ **623**
	868-120
54LS12	870-173
54LS122	880-116
54LS123	880-150
54LS125A	★ **612**
	856-101
54LS126	★ **612**
	856-126
54LS13	★ **612**
	887-112
54LS132	887-158
54LS133	★ **612**
	872-58
54LS136	★ **612**
	874-70
54LS138	★ **608**
54LS138	★ **612**
54LS138	★ **621**
54LS138	★ **623**
	863-114
54LS139	★ **608**
54LS139	★ **613**
54LS139	★ **621**
54LS139	★ **623**
	863-14
54LS14	★ **612**
	888-36
54LS15	★ **612**
	869-53
54LS151	★ **608**
54LS151	★ **613**
54LS151	★ **621**
54LS151	★ **623**
	879-172
54LS152	★ **613**
	880-20
54LS153	★ **608**
54LS153	★ **613**
54LS153	★ **621**
54LS153	★ **623**
	877-138
54LS155	★ **613**
	863-78
54LS156	★ **613**
	863-47
54LS157	★ **608**
54LS157	★ **613**
54LS157	★ **621**
54LS157	★ **623**
	879-7
54LS158	★ **608**
54LS158	★ **613**
54LS158	★ **621**
54LS158	★ **623**
	878-92
54LS160A	★ **613**
	860-161
54LS161	★ **613**
	858-151
54LS162A	★ **613**
	861-11
54LS163A	★ **613**
	859-6
54LS164	★ **613**
	882-4
	★ **613**
	3856-40
54LS165	★ **613**
	882-54
	★ **613**
	3855-119
54LS168	★ **613**
	861-93
54LS169	★ **613**
	859-139
54LS170	★ **613**
	877-4
	★ **613**
	3830-79
54LS173A	★ **613**
	866-13
54LS174	★ **608**
54LS174	★ **613**
54LS174	★ **621**
54LS174	★ **623**
	866-49
54LS175	★ **608**
54LS175	★ **613**
54LS175	★ **621**
54LS175	★ **623**
	864-281
54LS181	★ **613**
	855-56
54LS189	3831-84
54LS190	861-168
54LS191	859-175
54LS192	★ **613**
	861-136
54LS193	★ **608**
54LS193	★ **613**
54LS193	★ **621**
54LS193	★ **623**
	860-35
54LS194A	★ **608**
54LS194A	★ **613**
54LS194A	★ **621**
54LS194A	★ **623**
	881-134
	★ **608**
	★ **613**
	★ **621**
	★ **623**
	3854-73
54LS195	★ **613**
	881-43
54LS195A	★ **613**
	3854-74
54LS196	860-120
54LS197	858-98
54LS20	★ **608**
54LS20	★ **612**
54LS20	★ **621**
54LS20	★ **623**
	870-12
54LS21	★ **608**
54LS21	★ **612**
54LS21	★ **621**
54LS21	★ **623**
	868-159
54LS22	★ **608**
54LS22	★ **612**
54LS22	★ **621**
54LS22	★ **623**
	870-89
54LS221	880-130
54LS240	★ **608**
54LS240	★ **613**
54LS240	★ **621**
54LS240	★ **623**
	883-150
	★ **608**
	★ **613**
	★ **621**
	★ **623**
	2882-43
54LS241	★ **613**
	884-32
	★ **613**
	2881-57
54LS242	2888-21
54LS243	2888-22
54LS244	★ **613**
	884-84
54LS245	★ **613**
	885-102
	★ **613**
	2890-44
54LS247	★ **613**
	2875-101
54LS248	★ **613**
	2875-60
54LS249	★ **613**
	2875-39
54LS251	★ **613**
	880-49
54LS253	★ **608**
54LS253	★ **613**
54LS253	★ **621**
54LS253	★ **623**
	878-44
54LS256	★ **613**
	875-18
54LS257A	★ **608**
54LS257A	★ **614**
54LS257A	★ **621**
54LS257A	★ **623**
	879-46
54LS258A	★ **608**
54LS258A	★ **614**
54LS258A	★ **622**
54LS258A	★ **623**
	878-132
54LS259	★ **614**
	875-138
54LS26	★ **612**
	871-120
54LS260	★ **614**
	865-18
54LS266	★ **608**
54LS266	★ **614**
54LS266	★ **622**
54LS266	★ **623**
	874-166
54LS27	★ **608**
54LS27	★ **612**
54LS27	★ **621**
54LS27	★ **623**
	865-52
54LS273	★ **614**
	866-150
54LS279	★ **608**
54LS279	★ **614**
54LS279	★ **622**
54LS279	★ **623**
	875-79
54LS28	★ **612**
	874-19
54LS283	★ **608**
54LS283	★ **614**
54LS283	★ **622**
54LS283	★ **623**
	856-37
54LS289	3831-82
54LS290	860-72
54LS293	859-61
54LS295A	★ **614**
	3854-75
54LS298	★ **614**
	879-98
54LS299	★ **614**
	882-138
	★ **614**
	3855-91
54LS30	★ **608**
54LS30	★ **612**
54LS30	★ **621**
54LS30	★ **623**
	872-25
54LS32	★ **608**
54LS32	★ **612**
54LS32	★ **621**
54LS32	★ **623**
	873-51
54LS322	★ **614**
	856-75
54LS323	★ **614**
	882-139
	★ **614**
	3855-92
54LS33	★ **612**
	865-77
54LS347	★ **614**
	2875-91
54LS352	★ **614**
	878-21
54LS353	★ **614**
	877-104
54LS365	★ **608**
54LS365	★ **614**
54LS365	★ **622**
54LS365	★ **623**
	857-6
54LS366	★ **608**
54LS366	★ **614**
54LS366	★ **622**
54LS366	★ **623**
	858-17
54LS367	★ **608**
54LS367	★ **614**
54LS367	★ **622**
54LS367	★ **623**
	857-7
54LS368	★ **608**
54LS368	★ **614**
54LS368	★ **622**
54LS368	★ **623**
	858-18
54LS37	★ **612**
	871-64
54LS373	876-9
54LS374	★ **614**
	867-9
54LS375	★ **614**
	875-41
54LS377	★ **614**
	867-40
54LS378	★ **614**
	866-84
54LS379	★ **614**
	864-331
54LS38	★ **612**
	871-103
54LS386	874-114
54LS390	861-32
54LS393	859-28
54LS395	★ **614**
	3854-76
54LS398	879-99
54LS399	879-100
54LS40	★ **612**
	870-57
54LS42	★ **608**
54LS42	★ **612**
54LS42	★ **621**
54LS42	★ **623**
	862-132
54LS447	★ **614**
	2875-92
54LS47	★ **612**
	2875-102
54LS48	★ **612**
	2875-61
54LS49	★ **612**
	2875-40
54LS490	★ **614**
	861-33
54LS502	★ **614**
	888-134
54LS503	★ **614**
	888-135
54LS51	★ **608**
54LS51	★ **612**
54LS51	★ **621**
54LS51	★ **623**
	872-90
54LS533	876-71
54LS534	866-130
54LS54	★ **608**
54LS54	★ **612**
54LS54	★ **621**
54LS54	★ **623**
	872-169
54LS540	2882-44
54LS541	2881-58
54LS55	★ **612**
	872-135
54LS670	★ **614**
	877-17
	★ **614**
	3830-93
54LS74	★ **608**
54LS74	★ **612**
54LS74	★ **621**
54LS74	★ **623**
	864-236
54LS83A	★ **608**
54LS83A	★ **612**
54LS83A	★ **621**
54LS83A	★ **623**
	856-38
54LS85	★ **608**
54LS85	★ **612**
54LS85	★ **621**
54LS85	★ **623**
	854-44
54LS86	874-115
54LS89	3831-83
54LS90	860-73
54LS92	862-15
54LS93	859-62
54LS95B	★ **608**
54LS95B	★ **612**
54LS95B	★ **621**
54LS95B	★ **623**
	881-74
	★ **608**
	★ **612**
	★ **621**
	★ **623**
	3854-77
54S00	871-38
54S02	874-43
54S04	857-128
54S05	857-175
54S08	869-123
54S09	869-162
54S10	870-155
54S109	867-139
54S11	869-39
54S112	868-103
54S113	868-67
54S114	868-133
54S132	888-13
54S133	872-64
54S134	872-46
54S135	874-51
54S137	863-158
54S138	863-130
54S139	863-29
54S140	864-9
54S140	2883-28
54S15	869-65
54S151	880-7
54S153	877-153
54S157	879-23
54S158	878-107
54S167	887-72
54S174	866-65
54S175	864-297
54S189	3831-74
54S194	881-146
54S194	3854-115
54S20	870-27
54S22	870-101
54S253	878-60
54S258	878-149
54S260	865-27
54S280	889-31
54S289	3831-68
54S30	872-40
54S32	873-66
54S40	870-71
54S51	872-106
54S64	873-7
54S65	873-15
54S74	864-251
54S86	874-138
55154	2885-48
55S20	2899-3
55S234	2899-5
55S24	2899-10
7400	870-184
7401	871-135
7402	865-90
7403	871-136
7404	857-76
7405	857-138
7406	864-107
7407	864-87
7408	869-72
7409	869-133
7410	870-108
74107	867-153
7411	868-177
7412	870-165
74121	880-94
74122	880-112
74123	880-142
74125	856-90
74126	856-117
7413	887-99
74132	887-145
7414	888-23
74141	2876-28
74145	862-98
74150	880-76
74151	879-154
74153	877-117
74155	863-70
74156	863-39
74157	878-158
7416	864-96
74160	860-134
74161	858-120
74162	860-180
74163	858-173
74164	881-167
74164	3856-41
74165	882-44
74165	3855-111
74166	882-62
74166	3855-120
74167	887-68
7417	864-78
74170	876-154
74170	3830-80
74173	866-2
74174	866-25
74175	864-261
74176	860-102
74177	858-75
74178	3854-50
74179	881-93
74179	3854-51
74180	889-2
74190	861-151
74191	859-158
74192	861-116
74193	860-16
74194	881-120
74194	3854-52
74195	881-24
74195	3854-78
74196	860-103
74197	858-76
74198	882-26
74198	3855-78
74199	882-32
74199	3855-79
7420	869-168
7421	868-140
7422	870-80
7423	865-13
7425	865-4
7426	864-34
7427	865-35
74279	875-74
	¶ 445-5
74283	856-21
74290	860-59
74293	859-46
74298	879-76
7430	872-2
7432	873-23
7437	871-48
7438	871-83
7439	871-84
7440	870-36
7441	2876-22
7442	862-114
7443	862-67
7445	862-89
7446	2875-132
7447	2875-103
7448	2875-62
7450	872-116
7451	872-76
7453	872-163
7454	872-156
7460	872-130
7470	867-73
7472	867-82
7473	867-154
7474	864-208
7475	875-33
7476	868-23
7482	855-9
7483	856-22
7485	854-45

Arranged alphanumerically from left to right.

ADVERTISERS' PRODUCT INDEX

Device	Page-Line
Fairchild	**(Cont'd)**
7486	874-89
7490	860-60
7491	882-101
7491	3856-68
7492	862-7
7493	859-47
7494	881-115
7494	3855-25
7495	881-63
7495	3854-53
7496	881-152
7496	3855-44
7497	888-110
74AC00	★ 1011
74AC00	★ 1013
	825-45
74AC02	★ 1011
74AC02	★ 1013
	827-114
74AC04	★ 1011
74AC04	★ 1013
	810-177
74AC08	★ 1011
74AC08	★ 1013
	824-48
74AC10	★ 1011
74AC10	★ 1013
	824-173
74AC1010	★ 1012
74AC1010	★ 1016
	807-82
74AC1016	★ 1012
74AC1016	★ 1016
	807-128
74AC1017	★ 1012
74AC1017	★ 1016
	807-132
74AC109	★ 1011
74AC109	★ 1013
	822-172
74AC11	★ 1011
74AC11	★ 1013
	823-194
74AC138	★ 1011
74AC138	★ 1015
	817-179
74AC139	★ 1011
74AC139	★ 1015
	817-91
74AC14	★ 1011
74AC14	★ 1013
	839-11
74AC151	★ 1011
74AC151	★ 1015
	833-25
74AC153	★ 1011
74AC153	★ 1015
	831-138
74AC157	★ 1015
	832-57
74AC158	★ 1011
74AC158	★ 1015
	832-99
74AC160	★ 1011
74AC160	★ 1014
	814-162
74AC161	★ 1011
74AC161	★ 1014
	811-173
74AC163	★ 1011
74AC163	★ 1014
	811-117
74AC169	★ 1011
74AC169	★ 1014
74AC174	★ 1011
74AC174	★ 1013
	820-177
74AC175	★ 1011
74AC175	★ 1013
	820-85
74AC191	★ 1011
74AC191	★ 1014
	812-37
74AC20	★ 1011
74AC20	★ 1013
	824-115
74AC240	★ 1011
74AC240	★ 1014
	839-57
74AC241	★ 1011
74AC241	★ 1014
	839-140
74AC244	★ 1011
74AC244	★ 1014
	840-61
74AC245	★ 1011
74AC245	★ 1015
	841-101
74AC251	★ 1011
74AC251	★ 1015
	833-103
74AC253	★ 1011
74AC253	★ 1015
	832-34
74AC257	★ 1011
74AC257	★ 1015
	832-133
74AC258	★ 1011
74AC258	★ 1015
	832-166
74AC273	★ 1011
74AC273	★ 1013
	821-51
74AC293	★ 1011
74AC299	★ 1014
	836-142
74AC32	★ 1011
74AC32	★ 1013
	826-124
74AC323	★ 1011
74AC323	★ 1014
74AC373	★ 1012
74AC373	★ 1013
	829-101
74AC374	★ 1012
74AC374	★ 1013
	822-36
74AC377	★ 1012
74AC377	★ 1013
74AC378	★ 1013
74AC379	★ 1012
74AC379	★ 1013
74AC520	★ 1012
74AC520	★ 1015
	806-148
74AC521	★ 1012
74AC521	★ 1015
	806-125
74AC540	★ 1012
74AC540	★ 1014
	810-46
74AC541	★ 1012
74AC541	★ 1014
	810-47
74AC563	★ 1012
74AC563	★ 1013
	830-28
74AC564	★ 1012
74AC564	★ 1013
	821-126
74AC569	★ 1012
74AC569	★ 1014
74AC573	★ 1012
74AC573	★ 1013
	829-102
74AC574	★ 1012
74AC574	★ 1013
	822-37
74AC646	★ 1012
74AC646	★ 1015
	840-147
74AC648	★ 1012
74AC648	★ 1015
	840-100
74AC708	★ 1012
74AC708	★ 1016
74AC74	★ 1011
74AC74	★ 1013
	820-13
74AC86	★ 1011
74AC86	★ 1013
	828-20
74ACT1010	★ 1012
74ACT1010	★ 1016
	807-84
74ACT1016	★ 1012
74ACT1016	★ 1016
	807-130
74ACT1017	★ 1012
74ACT1017	★ 1016
	807-134
74ACT138	★ 1012
74ACT138	★ 1015
	817-181
74ACT240	★ 1012
74ACT240	★ 1014
	839-59
74ACT241	★ 1012
74ACT241	★ 1014
	839-142
74ACT244	★ 1012
74ACT244	★ 1014
	840-63
74ACT245	★ 1012
74ACT245	★ 1015
	841-103
74ACT373	★ 1012
74ACT373	★ 1013
	829-105
74ACT374	★ 1012
74ACT374	★ 1013
	822-40
74ACT563	★ 1012
74ACT563	★ 1013
	830-30
74ACT564	★ 1012
74ACT564	★ 1013
	821-128
74ACT573	★ 1012
74ACT573	★ 1013
	829-106
74ACT574	★ 1012
74ACT574	★ 1013
	822-41
74ACT708	★ 1012
74ACT708	★ 1016
74F00	★ 1021
74F00	★ 5310
	871-12
74F02	★ 1021
74F02	★ 5310
	874-14
74F04	★ 1021
74F04	★ 5310
	857-103
74F08	★ 1021
74F08	★ 5310
	869-98
74F10	★ 1021
74F10	★ 5310
	870-132
74F109	★ 1021
74F109	★ 5310
	867-120
74F11	★ 1021
74F11	★ 5310
	869-16
74F112	★ 1021
74F112	★ 5310
	868-82
74F113	★ 1021
74F113	★ 5310
	868-50
74F114	★ 1021
74F114	★ 5310
	868-116
74F13	★ 1021
	887-110
74F132	★ 1021
	887-156
74F138	★ 1025
74F138	★ 5310
	863-109
74F139	★ 1025
	863-7
74F14	★ 1021
	888-34
74F146	★ 1028
74F148	★ 1028
74F148	★ 5310
	888-152
74F151	★ 1025
74F151	★ 5310
	879-168
74F153	★ 1025
74F153	★ 5310
	877-134
74F157	★ 1025
74F157	★ 5310
	879-2
74F158	★ 1025
74F158	★ 5310
	878-87
74F160A	★ 1023
74F160A	★ 5310
	860-157
74F161A	★ 1023
74F161A	★ 5310
	858-147
74F162A	★ 1023
74F162A	★ 5310
	861-7
74F163A	★ 1023
74F163A	★ 5310
	859-2
74F164	★ 1023
74F164	★ 5310
	882-2
74F168	★ 1023
74F168	★ 5310
	861-87
74F169	★ 1023
74F169	★ 5310
	859-132
74F174	★ 1022
74F174	★ 5310
	866-43
74F175	★ 1022
74F175	★ 5310
	864-277
74F181	★ 1026
74F181	★ 5310
	855-40
74F182	★ 1027
74F182	★ 5310
	855-102
74F189	★ 1027
74F189	★ 5310
	877-56
74F190	★ 1023
74F190	★ 5310
	861-162
74F191	★ 1023
74F191	★ 5310
	859-171
74F192	★ 1023
74F192	★ 5310
	861-130
74F193	★ 1023
74F193	★ 5310
	860-31
74F194	★ 1023
74F194	★ 5310
	881-130
74F195	★ 1023
	881-39
74F20	★ 1021
74F20	★ 5310
	870-2
74F211	★ 1027
	877-80
74F212	★ 1027
	877-81
74F213	★ 1027
	877-85
74F219	★ 1027
74F219	★ 5310
	877-57
74F240	★ 1024
74F240	★ 5310
	883-141
	★ 1024
	★ 5310
	2882-45
74F241	★ 1024
74F241	★ 5310
	884-24
74F242	★ 1024
	883-59
74F243	★ 1024
	883-60
74F244	★ 1024
74F244	★ 5310
	884-78
74F245	★ 1024
74F245	★ 5310
	885-87
74F251	★ 1025
74F251	★ 5310
	880-45
74F253	★ 1025
74F253	★ 5310
	878-40
74F256	★ 1022
	875-16
74F257	★ 1025
74F257	★ 5310
	879-41
74F258	★ 1025
74F258	★ 5310
	878-127
74F259	★ 1022
	875-136
74F269	★ 1023
	859-133
74F273	★ 1022
	866-146
74F280	★ 1026
74F280	★ 5310
	889-18
74F283	★ 1025
74F283	★ 5310
	856-33
74F289	877-40
74F298	★ 1025
	879-86
74F299	★ 1023
74F299	★ 5310
	882-126
74F30240	★ 1024
74F30241	★ 1024
74F30244	★ 1024
74F3037	★ 1021
	888-18
74F3038	★ 1021
74F3040	★ 1021
	887-131
74F311	877-76
74F312	877-77
74F313	877-83
74F319	877-41
74F32	★ 1021
	873-46
74F322	★ 1023
74F322	★ 5310
	882-89
74F323	★ 1023
74F323	★ 5310
	882-127
74F350	★ 1025
74F350	★ 1027
74F350	★ 5310
	843-121
74F352	★ 1025
74F352	★ 3510
	878-17
74F353	★ 1025
74F353	★ 5310
	877-100
74F365	★ 1024
	856-180
74F366	★ 1024
	858-11
	864-124
74F367	★ 1024
	857-1
74F368	★ 1024
	858-12
74F37	★ 1021
	871-62
74F373	★ 1022
74F373	★ 5310
	875-181
74F374	★ 1022
74F374	★ 5310
	867-3
74F377	★ 1022
	867-37
74F378	★ 1022
74F378	★ 5310
	866-74
74F379	★ 1022
74F379	★ 5310
	864-321
74F38	★ 1021
	871-101
74F381	★ 1026
74F381	★ 5310
	855-41
74F382	★ 1026
74F382	★ 5310
	855-42
74F384	★ 1026
74F384	★ 5310
	843-23
74F385	★ 1025
74F385	★ 5310
	854-6
74F395	★ 1023
	881-102
74F398	★ 1025
74F398	★ 5310
	879-87
74F399	★ 1022
74F399	★ 1025
74F399	★ 5310
	879-88
74F40	★ 1021
	870-49
74F401	★ 1028
74F401	★ 5310
	854-156
	★ 1028
	★ 5310
	2878-9
74F402	★ 1022
74F402	★ 1028
74F402	★ 5310
	881-14
	★ 1022
	★ 1028
	★ 5310
	2878-15
74F403	★ 1027
	3809-4
74F407	★ 1027
74F407	★ 5310
	876-132
74F410	★ 1022
74F410	★ 1027
74F410	★ 5310
	877-69
74F411	★ 1027
74F412	★ 1022
74F412	★ 5310
	875-182
74F413	★ 1027
	3809-61
74F416	2878-30
74F418	2878-31
74F418	2879-4
74F420	★ 1027
	2878-32
74F430	2879-2
74F432	★ 1022
74F432	★ 5310
	875-183
74F433	★ 1027
	3809-62
74F492	2878-13
74F500	★ 1028
	844-1
	★ 1028
	2832-10
74F510	843-122
74F521	★ 1026
74F521	★ 5310
	854-101
74F524	★ 1026
74F524	★ 5310
	854-36
74F525	★ 1023
74F525	★ 1026
74F525	★ 5310
	862-30
	889-62
74F526	886-111
74F533	★ 1022
74F533	★ 5310
	876-63
74F534	★ 1022
74F534	★ 5310
	866-124
74F537	★ 1025
74F537	★ 5310
	862-149
74F538	★ 1025
	863-142
74F539	★ 1025
74F539	★ 5310
	863-63
74F540	★ 1024
	883-142
74F541	★ 1024
	884-25

¶ Indicates page number in Application Note Directory.
★ Indicates additional data is provided on the page noted.

Device	Page-Line
Fairchild	**(Cont'd)**
74F543	★ 1024
74F543	★ 5310
	886-8
74F544	★ 1024
74F544	★ 5310
	886-9
74F545	★ 1024
74F545	★ 5310
	885-88
74F547	★ 1025
74F547	★ 5310
	863-95
74F548	★ 1025
74F548	★ 5310
	863-96
74F550	★ 1024
74F550	★ 5310
	886-10
74F551	★ 1024
74F551	★ 5310
	886-11
74F552	★ 1024
74F552	★ 5310
	886-12
74F557	843-24
74F558	843-25
74F559	855-123
74F563	★ 1022
74F563	★ 5310
	876-64
74F564	★ 1022
74F568	★ 1023
74F568	★ 5310
	861-74
74F569	★ 1023
74F569	★ 5310
	859-116
74F570	877-36
74F571	877-34
74F573	★ 1022
74F573	★ 5310
	876-1
74F574	★ 1022
	867-4
74F579	★ 1023
	859-117
74F582	★ 1026
74F582	★ 5310
74F583	★ 1025
74F583	★ 5310
	854-164
74F588	★ 1024
74F588	★ 5310
	887-24
74F595	★ 1023
	882-93
74F597	★ 1023
	882-79
74F598	★ 1023
	882-80
74F604	★ 1022
	875-103
74F605	875-104
74F606	875-105
74F607	875-106
74F610	887-30
74F611	887-31
74F612	887-32
74F613	887-33
74F620	★ 1024
	886-92
74F621	★ 1024
	886-50
74F622	★ 1024
	886-51
74F623	★ 1024
	886-93
74F630	★ 1027
	2878-33
74F631	2878-34
74F632	★ 1027
74F64	★ 1021
74F64	★ 5310
	873-2
74F646	★ 1024
	886-13
74F648	★ 1024
	886-14
74F655	★ 1024
	858-52
74F656	★ 1024
	857-45
74F657	★ 1024
	885-147
74F673	★ 1023
74F673	★ 5310
	883-22
	★ 1023
	★ 5310
	3856-103
74F674	★ 1023
	883-9
	★ 1023
	3856-104
74F675	★ 1023
74F675	★ 5310
	883-19
	★ 1023
	★ 5310
	3856-105
74F676	★ 1023
74F676	★ 5310
	883-16
	★ 1023
	★ 5310
	3856-106
74F701	★ 1028
74F702	★ 1024
74F74	★ 1021
74F74	★ 5310
	864-226
74F779	★ 1023
	859-118
74F784	★ 1026
74F784	★ 5310
	843-26
74F785	★ 1026
74F821	★ 1022
	867-70
74F822	★ 1022
74F823	★ 1022
	867-62
74F825	★ 1022
	867-56
74F826	★ 1022
74F827	★ 1024
	857-71
74F828	★ 1024
	858-71
74F841	★ 1022
	876-121
74F843	★ 1022
	876-101
74F845	★ 1022
	876-83
74F85	854-73
74F86	★ 1021
74F86	★ 5310
	874-109
74H00	871-18
74H01	871-164
74H04	857-109
74H05	857-156
74H08	869-103
74H09	869-145
74H10	870-136
74H101	867-100
74H103	868-76
74H106	868-87
74H108	868-44
74H11	869-21
74H183	855-2
74H20	870-8
74H21	868-155
74H22	870-87
74H30	872-21
74H40	870-52
74H50	872-125
74H51	872-86
74H52	872-73
74H53	872-153
74H54	872-150
74H55	872-147
74H61	887-136
74H62	888-54
74H72	867-89
74H73	867-170
74H74	864-231
74H87	888-104
74HC00	825-50
74HC02	827-119
74HC07	808-146
74HC08	824-53
74HC10	824-179
74HC109	822-178
74HC112	823-72
74HC125	808-125
74HC132	838-142
74HC133	825-187
74HC138	818-7
74HC139	817-101
74HC14	811-81
74HC147	833-150
74HC147	833-154
74HC151	833-29
74HC153	833-80
74HC154	819-18
74HC160	814-167
74HC162	814-118
74HC163	811-122
74HC164	836-36
74HC165	835-182
74HC173	820-135
74HC175	820-90
74HC192	815-30
74HC193	812-43
74HC195	835-92
74HC20	824-119
74HC221	834-6
74HC240	839-72
74HC241	839-148
74HC242	838-82
74HC243	838-118
74HC244	840-69
74HC245	841-118
74HC251	833-81
74HC253	832-12
74HC257	832-136
74HC259	830-171
74HC27	827-58
74HC273	821-57
74HC280	808-35
74HC283	806-36
74HC299	836-147
74HC30	825-147
74HC32	826-129
74HC365	809-115
74HC366	809-185
74HC367	809-116
74HC368	809-186
74HC373	829-118
74HC374	822-57
74HC390	815-146
74HC393	812-174
74HC4017	814-70
74HC4020	813-164
74HC4040	813-121
74HC4046	833-166
74HC4047	833-167
74HC4049	809-20
74HC4050	809-64
74HC4051	842-86
74HC4052	838-57
74HC4053	838-63
74HC42	817-6
74HC4510	815-119
74HC4512	833-82
74HC4514	819-19
74HC4516	812-44
74HC4538	834-7
74HC4703	837-71
74HC533	830-44
74HC534	821-144
74HC543	842-19
74HC544	842-20
74HC550	842-37
74HC551	842-38
74HC551	842-39
74HC563	830-45
74HC564	821-145
74HC568	815-143
74HC569	812-45
74HC573	829-119
74HC574	822-58
74HC640	841-7
74HC643	841-10
74HC645	840-94
74HC646	840-153
74HC648	840-107
74HC648	842-49
74HC688	806-106
74HC688	806-128
74HC74	820-18
74HC75	830-138
74HC76	822-179
74HC85	807-30
74HC86	828-25
74HCT04	811-27
74HCT07	808-150
74LS00	★ 5311
	871-25
74LS02	★ 5311
	874-20
74LS03	★ 5311
	871-169
74LS04	★ 5311
	857-114
74LS05	★ 5311
	857-159
74LS08	★ 5311
	869-109
74LS09	★ 5311
	869-147
74LS10	★ 5311
	870-141
74LS107	867-176
74LS109	★ 5311
	867-125
74LS11	★ 5311
	869-26
74LS112	★ 5311
	868-92
74LS113	★ 5311
	868-55
74LS114	★ 5311
	868-121
74LS12	★ 5311
	870-174
74LS125	★ 5311
	856-102
74LS126	★ 5311
	856-127
74LS13	★ 5311
	887-113
74LS132	★ 5311
	887-159
74LS133	★ 5311
	872-59
74LS136	★ 5311
	874-71
74LS138	★ 5311
	863-115
74LS139	★ 5311
	863-15
74LS14	★ 5311
	888-37
74LS145	862-105
74LS15	★ 5311
	869-54
74LS151	★ 5311
	879-173
74LS152	★ 5311
74LS153	★ 5311
	877-139
74LS155	★ 5311
	863-79
74LS156	★ 5311
	863-48
74LS157	★ 5311
	879-8
74LS158	★ 5311
	878-93
74LS160	★ 5311
	860-162
74LS161	★ 5311
	858-152
74LS162	★ 5311
	861-12
74LS163	★ 5311
	859-7
74LS164	★ 5311
	882-5
	★ 5311
	3856-42
74LS165	★ 5311
	882-55
	★ 5311
	3855-121
74LS168	★ 5311
	861-94
74LS169	★ 5311
	859-140
74LS170	★ 5311
	877-5
	★ 5311
	3830-81
74LS173A	★ 5311
	866-14
74LS174	★ 5311
	866-50
74LS175	★ 5311
	864-282
74LS181	★ 5311
	855-57
74LS189	3831-60
74LS190	861-169
74LS191	859-176
74LS192	★ 5311
	861-137
74LS193	★ 5311
	860-36
74LS194A	★ 5311
	3854-79
74LS195	★ 5311
	881-44
74LS195A	★ 5311
	3854-80
74LS196	★ 5311
	860-121
74LS197	★ 5311
	858-99
74LS20	★ 5311
	870-13
74LS21	★ 5311
	868-160
74LS22	870-90
74LS240	★ 5311
	883-151
	★ 5311
	2882-46
74LS241	★ 5311
	884-33
	★ 5311
	2881-59
74LS242	883-71
74LS242	2888-37
74LS243	883-72
74LS243	2888-38
74LS244	★ 5311
	884-85
	★ 5311
	2881-60
74LS245	★ 5311
	885-103
	★ 5311
	2890-55
74LS247	★ 5311
	2875-104
74LS248	★ 5311
	2875-63
74LS249	★ 5311
	2875-41
74LS251	★ 5311
	880-50
74LS253	★ 5311
	878-45
74LS256	★ 5311
	875-19
74LS257	★ 5311
	879-47
74LS258	★ 5311
	878-133
74LS259	★ 5311
	875-139
74LS26	★ 5311
	871-121
74LS260	★ 5311
	865-19
74LS266	★ 5311
	874-167
74LS27	★ 5311
	865-53
74LS273	★ 5311
	866-151
74LS279	★ 5311
	875-80
74LS28	★ 5311
	874-21
74LS283	★ 5311
	856-39
74LS289	3831-59
74LS290	★ 5311
	860-74
74LS293	★ 5311
	859-63
74LS295	★ 5311
	881-15
74LS295A	★ 5311
	3854-81
74LS298	★ 5311
	879-101
74LS299	★ 5311
	882-140
	★ 5311
	3855-93
74LS30	★ 5311
	872-26
74LS32	★ 5311
	873-52
74LS322	★ 5311
	882-91
74LS323	★ 5311
	882-141
	★ 5311
	3855-94
74LS33	★ 5311
	865-78
74LS347	★ 5311
	2875-93
74LS352	★ 5311
	878-22
74LS353	★ 5311
	877-105
74LS365	★ 5311
	857-8
74LS366	★ 5311
	858-19
74LS367	★ 5311
	857-9
74LS368	★ 5311
	858-20
74LS37	★ 5311
	871-65
74LS373	★ 5311
	876-10
74LS374	★ 5311
	867-10
74LS375	★ 5311
	875-42
74LS377	★ 5311
	867-41
74LS378	★ 5311
	866-85
74LS379	★ 5311
	864-332
74LS38	★ 5311
	871-104
74LS386	★ 5311
	874-116
74LS390	★ 5311
	861-34
74LS393	★ 5311
	859-29
74LS395	★ 5311
	881-104
	★ 5311
	3854-82
74LS398	879-102
74LS399	879-103
74LS40	★ 5311
	870-58
74LS42	★ 5311
	862-133
74LS447	★ 5311
	2875-94
74LS47	★ 5311
	2875-105
74LS48	★ 5311
	2875-64
74LS49	2875-42
74LS490	★ 5311
	861-35
74LS502	★ 5311
	888-136
74LS503	★ 5311
	888-137
74LS51	★ 5311
	872-91
74LS533	★ 5311
	876-72
74LS534	★ 5311
	866-131
74LS54	★ 5311
	872-170
74LS540	★ 5311
	883-152
	★ 5311
	2882-47

Arranged alphanumerically from left to right.

Device **Page-Line**

Fairchild (Cont'd)

74LS541 884-34
74LS541 2881-61
74LS55 ★ **5311**
872-136
74LS563 ★ **5311**
876-73
74LS564 ★ **5311**
876-74
74LS573 ★ **5311**
876-11
74LS574 ★ **5311**
867-11
74LS602 ★ **5311**
74LS670 ★ **5311**
877-18
★ **5311**
3830-94
74LS74 ★ **5311**
864-237
74LS83 ★ **5311**
856-40
74LS85 ★ **5311**
854-46
74LS86 ★ **5311**
874-117
74LS90 ★ **5311**
74LS92 ★ **5311**
862-16
74LS93 ★ **5311**
859-64
74LS95B ★ **5311**
881-75
★ **5311**
3854-83
74S00 871-39
74S02 874-44
74S03 871-192
74S04 857-129
74S05 857-176
74S08 869-124
74S10 870-156
74S109 867-140
74S11 869-40
74S112 868-104
74S113 868-68
74S132 888-14
74S133 872-65
74S134 872-47
74S135 874-52
74S138 863-131
74S139 863-30
74S140 864-10
74S140 2883-29
74S15 869-66
74S151 880-8
74S153 877-154
74S157 879-24
74S158 878-108
74S167 887-73
74S174 866-66
74S175 864-298
74S189 3831-54
74S194 881-147
74S194 3854-116
74S20 870-28
74S22 870-102
74S253 878-61
74S257 879-62
74S258 878-150
74S260 865-28
74S289 3831-47
74S30 872-41
74S32 873-67
74S40 870-72
74S51 872-107
74S64 873-8
74S65 873-16
74S74 864-252
74S86 874-139
75107A 2886-19
75107B 2886-34
75108B 2886-39
75110A 2883-49
75150 2881-16
75154 2885-49
75239 2899-9
75450B 2896-117
75451A 2896-118
75451B 2896-119
75452A 2897-34

Device **Page-Line**

75452B 2897-35
75453A/B 2897-98
75461 2896-120
75462 2897-36
75471 2896-121
75472 2897-37
75474B 2897-69
75491 2876-102
75492 2876-135
75492A 2876-136
75S20 2899-4
75S234 2899-6
75S24 2899-11
9000M 867-92
9001C 867-93
9001M 867-94
9024C 867-102
9024M 867-103
9093 ★ **618**
9099 ★ **618**
91009C 886-142
9109 ★ **618**
9112 ★ **618**
930 ★ **609**
930 ★ **618**
930 ★ **622**
930 ★ **623**
9300C ★ **609**
9300C ★ **617**
881-25
★ **609**
★ **617**
3854-84
9300M ★ **609**
9300M ★ **617**
881-26
★ **609**
★ **617**
3854-85
9301C ★ **617**
862-115
9301M ★ **617**
862-116
9302C 862-117
9302M 862-118
9304C 854-166
9304M 854-167
9305C 859-48
9305M 859-49
9307C 2875-65
9307M 2875-66
9308C ★ **617**
875-25
9308M ★ **617**
875-26
9309C ★ **609**
9309C ★ **617**
9309C ★ **622**
9309C ★ **623**
878-3
9309M ★ **609**
9309M ★ **617**
9309M ★ **622**
9309M ★ **623**
878-4
9310C 860-135
9310M 860-136
9311C ★ **617**
863-167
9311M ★ **617**
863-168
9312C ★ **617**
879-137
9312M ★ **617**
879-138
9313C 879-149
9313M 879-150
9314C ★ **617**
875-68
9314M ★ **617**
875-69
9316C ★ **617**
858-121
9316M ★ **617**
858-122
93174C 866-26
9317BC 2875-106
9317BM 2875-107
9317CC 2875-133
9317CM 2875-134
9318C 888-139
9318M 888-140

Device **Page-Line**

9319C 861-63
9319M 861-64
932 ★ **618**
9320C 888-52
9320M 861-65
9321C 863-3
9321M 863-4
9322C ★ **609**
9322C ★ **617**
9322C ★ **622**
9322C ★ **623**
878-159
9322M ★ **609**
9322M ★ **617**
9322M ★ **622**
9322M ★ **623**
878-160
9324C ★ **617**
854-47
9324M ★ **617**
854-48
9328C ★ **617**
882-154
★ **617**
3856-88
9328M ★ **617**
882-155
★ **617**
3856-89
9334 ¶ 361-8
9334C ★ **617**
875-125
9334M ★ **617**
875-126
9338C ★ **617**
876-145
9338M ★ **617**
876-146
93407C 876-147
93407M 876-148
9340C 856-17
9340M 856-18
93415AC ★ **4011**
3834-65
93415C ★ **4011**
3834-81
93415M ★ **4011**
3834-89
93419A 3832-19
93419C 3832-21
93419M 3832-23
9341C 855-19
9341M 855-20
93422AC ★ **4012**
3833-21
93422AM ★ **4012**
3833-30
93422C ★ **4012**
3833-38
93422M ★ **4012**
3833-52
93425AC ★ **4012**
3834-66
93425AM ★ **4012**
3834-87
93425C ★ **4012**
3834-85
93425H-20 ★ **4012**
3816-75
3834-52
3834-54
93425H-25 ★ **4012**
3816-76
3834-57
3834-59
93425M ★ **4012**
3834-93
9342C 855-84
9342M 855-85
9344M 855-130
93475 3835-105
93479AC ★ **4012**
3834-12
93479AM ★ **4012**
3834-14
93479C ★ **4012**
3834-15
93479M ★ **4012**
3834-17
9348C ★ **617**
889-57

Device **Page-Line**

9348M ★ **617**
889-58
93546M 854-82
936 ★ **609**
936 ★ **618**
936 ★ **622**
936 ★ **623**
9368C 2875-32
937 ★ **618**
9370C 2875-29
9374C 2876-14
9386C 874-154
9386M 874-155
93L00C ★ **618**
3854-31
93L00M ★ **618**
3854-32
93L01 ★ **618**
93L02 ★ **618**
93L08 ★ **618**
93L09 ★ **618**
93L10 ★ **618**
93L12 ★ **618**
93L14 ★ **618**
93L21 ★ **618**
93L22 ★ **618**
93L24 ★ **618**
93L28C ★ **618**
3856-84
93L28M ★ **618**
3856-85
93L34 ★ **618**
93L38 ★ **618**
93L415 ★ **4011**
3834-90
93L415C ★ **4011**
3834-91
93L415M ★ **4011**
3834-102
93L421M 3832-81
93L422AC ★ **4012**
3833-31
93L422AM ★ **4012**
3833-44
93L422C ★ **4012**
3833-53
93L422M ★ **4012**
3833-57
93L425C ★ **4012**
3834-94
93L425M ★ **4012**
3834-104
93S00C 881-55
93S00C 3854-117
93S00M 881-56
93S00M 3854-118
93S10C 860-177
93S10M 860-178
93S12C 880-9
93S12M 880-10
93S137C 863-159
93S137M 863-160
93S16C 858-170
93S16M 858-171
93S41C 855-71
93S41M 855-72
93S42C 855-110
93S42M 855-111
93S43 ¶ 353-5
93S43C 855-140
93S43M 855-141
93S46C 854-83
93S47C 854-84
93S47M 854-85
93S62C 889-32
93S62M 889-33
93Z450 3817-89
93Z450A 3817-73
93Z451 ★ **4015**
3817-91
93Z451A ★ **4015**
3817-77
93Z459 ¶ 445-4
93Z459 ¶ 445-5
93Z459 ¶ 445-13
93Z459 ¶ 445-15
93Z510C 3818-110
93Z510M 3819-28
93Z511C ★ **4015**
3818-113
93Z511M ★ **4015**
3819-31

Device **Page-Line**

93Z564 3821-37
93Z565 ★ **4015**
3821-38
9401C 886-155
9401C 2878-5
9401C 1448-5
9401M 886-156
9401M 2878-6
9401M 1448-6
9403AC 1448-2
9403AM 1448-3
9414STC 886-159
9414STC 1448-9
9414STM 886-160
9414STM 1448-10
944 ★ **618**
945 ★ **618**
946 ★ **609**
946 ★ **618**
946 ★ **622**
946 ★ **623**
948 ★ **618**
949 ★ **618**
9600C ★ **609**
880-124
9600M ★ **609**
880-125
9601C ★ **609**
9601C ★ **617**
9601C ★ **622**
9601C ★ **623**
880-102
9601M ★ **609**
9601M ★ **617**
9601M ★ **622**
9601M ★ **623**
880-103
9602C ★ **609**
9602C ★ **617**
9602C ★ **622**
9602C ★ **623**
880-161
9602M ★ **609**
9602M ★ **617**
9602M ★ **622**
9602M ★ **623**
880-162
96101 864-47
96101C 2881-27
96101M 2881-28
96103M 2888-4
96106 2885-39
9612C 2883-20
9614C 2883-21
9614M 2883-22
9615C 2886-56
9615M 2886-57
962 ★ **609**
962 ★ **618**
962 ★ **622**
962 ★ **623**
9636A ¶ 396-13
9637A ¶ 396-13
9638 ¶ 396-13
96L02C 880-163
96L02M 880-164
96LS02C ★ **615**
96LS02C ★ **5311**
881-1
96LS02M ★ **615**
96LS02M ★ **5311**
881-2
96LS32 ★ **5311**
2892-62
96LS32C ★ **5311**
2892-63
96LS42C 2892-65
96LS42M 2892-66
96LS488 ¶ 361-5
96LS488DC 887-21
96LS488DC 1467-95
96LS488DM 887-22
96LS488DM 1467-96
96S02C 881-5
96S02M 881-6
CCD111 3400-11
CCD111 3400-50
CCD112 3400-12
CCD112 3400-51
CCD121 3400-57
CCD122 3400-13
CCD122 3400-58

Device **Page-Line**

CCD123 3400-14
CCD123 3400-59
CCD133 3400-15
CCD133 3400-54
CCD134 3400-16
CCD134 3400-55
CCD143 3400-17
CCD143 3400-61
CCD145 3400-18
CCD145 3400-62
CCD151 3400-19
CCD151 3400-66
CCD222 3400-6
CCD321A 3405-21
CCD321A 3854-7
CCD460 3854-21
CET200 3378-124
CMOS Library 4478-17
DAC08C 2854-32
DAC08EC 2852-24
DAC08M 2852-11
DAC1408 2852-55
DAC1408AC 2853-1
DAC1408BC 2854-40
DAC1408CC 2854-54
DAC1508 2853-2
DCM-1 2011-33
F100 ★ **4013**
F10000C 847-124
F10000C 3854-123
F100101 848-105
F100102 848-102
F100104 848-101
F100107 848-114
F10010C ★ **615**
845-68
F10010M ★ **615**
845-69
F100112 848-88
F100113 848-86
F100114 849-69
F100117 848-108
F100118 848-111
F100121 848-71
F100122 848-68
F100123 848-91
F100124 849-41
F100125 849-43
F100126 848-84
F100130 848-117
F100131 848-94
F100135 848-100
F100136 848-76
F100139 848-80
F100140 848-79
F100141 849-38
F100142 848-122
F100145 849-5
F100145 3831-7
F10014C ★ **615**
848-1
F10014M ★ **615**
848-2
F100150 848-119
F100151 848-97
F100155 849-29
F100156 849-35
F100158 843-114
F100160 849-66
F100163 849-23
F100164 849-32
F100165 849-60
F100166 848-64
F10016C ★ **615**
845-45
F10016M ★ **615**
845-46
F100170 848-81
F100171 849-26
F100175 849-49
F100179 848-59
F100180 843-3
F100181 844-44
F100182 843-5
F100183 843-14
F100194 849-72
F100250 849-57
F100255 849-48
F100402 849-4
F100402 3831-5
F10041 3856-63
F100414 849-8

¶ Indicates page number in Application Note Directory.
★ Indicates additional data is provided on the page noted.

Fairchild (Cont'd)

Device	Page-Line
F100414C	3832-44
F100415	★ **4014**
	849-12
F100415A	★ **4014**
	847-70
F100415C	★ **4014**
	3834-39
F100416	849-1
F100416C	3814-75
F10042	★ **4014**
F100422	★ **4014**
	849-9
	★ **4014**
	3832-99
F100422C	★ **4014**
	3832-100
F100470	849-17
F100470	3839-94
F100470A	3839-77
F100474	849-13
F100474	3835-58
F100480	849-20
F100480	3844-19
F100K	¶ 359-3
F100Z416	849-2
F100Z416	3814-70
F101	★ **4013**
F10100	846-66
F10101	846-91
F10102	846-58
F10103	846-25
F10104	846-2
F10105	846-82
F10106	846-50
F10107	846-137
F10109	846-73
F10110	846-13
F10111	846-32
F10113	846-131
F10114	848-14
F10115	848-35
F10116	848-15
F10117	846-115
F10118	846-99
F10119	846-107
F10121	846-123
F10123	845-101
F10124	847-147
F10125	847-138
F10130	846-153
F10131	845-110
F10132	847-12
F10133	847-22
F10134	847-6
F10135	845-136
F10136	845-53
F10137	845-63
F10141	847-125
F10141	3855-1
F10145A	3831-9
F10145AC	847-47
F10153	847-23
F10158	847-108
F10159	847-101
F10160	848-51
F10161	845-79
F10162	845-70
F10164	847-115
F10165	848-43
F10168	847-18
F10171	845-93
F10172	845-87
F10173	847-32
F10174	847-93
F10175	846-145
F10176	845-124
F10177	847-133
F10179	845-2
F10180	845-9
F10181	845-22
F10186	845-131
F10192	845-106
F10210	846-14
F10211	846-33
F10212	846-46
F10231	845-111
F10402	847-48
F10414C	3832-45
F10414M	3832-48
F10415	★ **4014**
	847-71
	★ **4014**
	3834-67
F10415A	★ **4014**
	847-72
F10415AC	★ **4014**
	3834-48
F10415C	★ **4014**
	3834-35
F10416	847-42
F10416C	3814-66
F1042	★ **4014**
F10422	★ **4014**
	3832-104
F10422C	★ **4014**
	3832-105
F10470	847-84
F10470	3839-97
F10470A	3839-81
F10474C	847-73
F10474C	3835-60
F10480	847-92
F10480	3844-20
F10501	★ **615**
	846-92
F10502	★ **615**
	846-59
F10503	846-26
F10504	★ **615**
	846-3
F10505	846-83
F10506	846-51
F10507	846-138
F10509	846-74
F10510	846-15
F105100	846-67
F10511	846-34
F10513	846-132
F10514	★ **615**
	848-16
F10515	★ **615**
	848-36
F10516	★ **615**
	848-17
F10517	846-116
F10518	846-100
F10519	846-108
F10521	846-124
F10523	★ **615**
	845-102
F10524	★ **615**
	847-148
F10525	★ **615**
	847-139
F10530	846-154
F10531	845-112
F10532	847-13
F10533	★ **615**
	847-24
F10534	★ **615**
	847-7
F10535	★ **615**
	845-137
F10536	845-54
F10537	845-64
F10541	847-126
F10545A	3831-10
F10545AM	847-49
F10553	847-25
F10558	★ **615**
	847-109
F10559	847-102
F10560	848-52
F10561	★ **615**
	845-80
F10562	★ **615**
	845-71
F10564	847-116
F10565	848-44
F10566	845-29
F10568	847-19
F10570	848-49
F10571	845-94
F10572	845-88
F10573	847-33
F10574	847-94
F10575	846-146
F10576	845-125
F10579	845-3
F10580	845-10
F10581	845-23
F10586	845-132
F10592	845-107
F10610	846-16
F10611	846-35
F10612	846-47
F10631	★ **615**
	845-113
F10Z416	847-43
F10Z416	3814-71
F10Z416A	3814-64
F1600-45	★ **4011**
	3847-5
F1600-55	★ **4011**
	3847-22
F1600-70	★ **4011**
	3847-43
F1600M-55	★ **4011**
	3847-23
F1600M-70	★ **4011**
	3847-44
F1601-55	★ **4011**
	3847-24
F1601-70	★ **4011**
	3847-45
F16032	1463-100
F16032	1437-38
F2847	3857-29
F2847L	3857-30
F2847LM	3857-26
F2847M	3857-27
F32032	1464-87
F3357M	3857-32
F3516-35	3849-52
F3516-45	3849-57
F35316-25	3849-41
F35316-30	3849-45
F3532-30	3849-105
F3532-35	3849-118
F3532-45	3850-5
F3533-30	3849-106
F3533-35	3849-119
F3533-45	3850-6
F3564-25	3850-104
F3564-35	3851-54
F3565-25	3850-120
F3565-35	3851-55
F3566-25	3851-10
F3566-35	3851-64
F3568-25	3851-11
F3568-35	3851-65
F3569-25	3851-12
F3569-35	3851-66
F3570-25	3851-13
F3570-35	3851-67
F3846	2901-35
F3870	¶ 363-14
F3870-PEP	2023-16
F3872	1453-6
F38L72	1453-7
F40014AM	839-37
F40014BC	839-38
F4001BC	827-155
F4001BM	827-156
F4002BC	827-32
F4002BM	827-33
F4006BC	836-177
F4006BC	3855-55
F4006BM	836-178
F4006M	3855-59
F4007UBC	810-155
F4007UBM	810-156
F40085BC	807-54
F40085BM	807-55
F4008BC	806-56
F4008BM	806-57
F40097BC	809-167
F40097BM	809-168
F40098BC	811-96
F40098BM	811-97
F401	★ **1029**
F4011BC	825-84
F4011BM	825-85
F4012BC	824-142
F4012BM	824-143
F4013BC	820-51
F4013BM	820-52
F4014BC	836-121
F4014BC	3856-14
F4014BM	836-122
F4014BM	3856-25
F4015BC	834-158
F4015BC	3855-34
F4015BM	834-159
F4015BM	3855-38
F40160BC	815-9
F40160BM	815-10
F40161BC	812-19
F40161BM	812-20
F40162BC	814-143
F40162BM	814-144
F40163BC	811-156
F40163BM	811-157
F4016C	2824-38
F4016M	2824-39
F40174BC	821-31
F40174BM	821-32
F40175BC	820-118
F40175BM	820-119
F4017BC	814-89
F4017BM	814-90
F4018BC	816-97
F4018BM	816-98
F40192BC	815-54
F40192BM	815-55
F40193BC	812-89
F40193BM	812-90
F40194BC	835-50
F40194BC	3855-12
F40194BM	835-51
F40194BM	3855-2
F40195BC	835-113
F40195BC	3855-13
F40195BM	835-114
F40195BM	3855-3
F4019BC	826-5
F4019BM	826-6
F402	★ **1035**
F4020BC	813-182
F4020BM	813-183
F4021BC	835-118
F4021BC	3856-15
F4021BM	835-119
F4021BM	3856-26
F4022BC	816-72
F4022BM	816-73
F4023BC	825-17
F4023BM	825-18
F4024BC	813-52
F4024BM	813-53
F4025BC	827-85
F4025BM	827-86
F4027BC	823-35
F4027BM	823-36
F4028BC	817-31
F4028BM	817-32
F4029BC	816-116
F4029BM	816-117
F4030BC	828-56
F4030BM	828-57
F4031BC	837-12
F4031BC	3856-119
F4031BM	837-13
F4031BM	3856-121
F4034BC	835-138
F4034BM	835-139
F4035BC	835-63
F4035BC	3855-14
F4035BM	835-64
F4035BM	3855-4
F4040BC	813-140
F4040BM	813-141
F4041BC	808-108
F4041BM	808-109
F4042BC	829-34
F4042BM	829-35
F4043BC	829-70
F4043BM	829-71
F4044BC	829-53
F4044BM	829-54
F4046BC	837-112
F4046BC	3375-44
F4046BM	837-113
F4046BM	3375-45
F4047BC	833-168
F4047BM	833-169
F4049BC	809-32
F4049BM	809-33
F4050BC	809-76
F4050BM	809-77
F4051BC	2830-107
F4051BM	2830-108
F4052BC	2830-5
F4052BM	2830-6
F4053BC	2826-39
F4053BM	2826-40
F4066BC	2824-1
F4066BM	2824-2
F4067BC	2831-58
F4067BM	2831-59
F4068BC	825-171
F4068BM	825-172
F4069UBC	811-56
F4069UBM	811-57
F407	★ **1043**
F4070BC	828-58
F4070BM	828-59
F4071BC	826-156
F4071BM	826-157
F4072BC	826-70
F4072BM	826-71
F4073BC	824-26
F4073BM	824-27
F4075BC	826-107
F4075BM	826-108
F4076BC	820-158
F4076BM	820-159
F4077BC	828-116
F4077BM	828-117
F4078BC	828-1
F4078BM	828-2
F4081BC	824-83
F4081BM	824-84
F4082BC	823-176
F4082BM	823-177
F4085BC	826-28
F4085BM	826-29
F4086BC	826-58
F4086BM	826-59
F4093BC	838-162
F4093BM	838-163
F4104BE	837-37
F4104BM	837-38
F4116-3	3826-68
F4116-4	3826-82
F4164-20	3827-72
F4510BC	815-56
F4510BM	815-57
F4511BC	819-148
F4511BC	2875-149
F4511BM	819-149
F4511BM	2875-150
F4512BC	833-57
F4512BM	833-58
F4514BC	818-178
F4514BM	818-179
F4515BC	818-180
F4515BM	818-181
F4516BC	812-91
F4516BM	812-92
F4518BC	815-183
F4518BM	815-184
F4519BC	833-16
F4519BM	833-17
F4520BC	812-155
F4520BM	812-156
F4522BC	815-97
F4522BM	815-98
F4526BC	812-124
F4526BM	812-125
F4528BC	834-83
F4528BM	834-84
F4531BC	842-105
F4531BM	842-106
F4532BC	842-72
F4532BM	842-73
F4539BC	832-2
F4539BM	832-3
F4553BC	816-14
F4553BM	816-15
F4555BC	817-58
F4555BM	817-59
F4556BC	817-71
F4556BM	817-72
F4557BC	837-23
F4557BC	3857-5
F4557BM	837-24
F4557BM	3857-1
F4582BC	807-16
F4582BM	807-17
F4583BC	838-50
F4583BM	838-51
F464	3854-22
F4702BC	837-52
F4702BC	2900-19
F4702BC	1448-23
F4702BM	837-53
F4702BM	2900-20
F4702BM	1448-24
F4703BC	831-86
F4703BC	1448-19
F4703BM	831-87
F4703BM	1448-20
F4704BC	806-103
F4704BC	1448-15
F4704BM	806-104
F4704BM	1448-16
F4705BC	806-149
F4705BC	1448-11
F4705BM	806-150
F4705BM	1448-12
F4706BC	831-93
F4706BC	1448-21
F4706BM	831-94
F4706BM	1448-22
F4707BC	806-101
F4707BC	1448-13
F4707BM	806-102
F4707BM	1448-14
F4708C	1448-17
F4708M	1448-18
F4710BC	831-108
F4710BC	3831-118
F4710BC	1448-26
F4710BM	831-109
F4710BM	3831-119
F4710BM	1448-27
F4720AC	831-115
F4720AC	3832-82
F4720AM	831-116
F4720C	831-117
F4720C	3832-83
F4720C	1448-30
F4720M	831-118
F4720M	3832-84
F4720M	1448-31
F4723BC	829-17
F4723BM	829-18
F4724BC	831-11
F4724BM	831-12
F4725BC	831-104
F4725BC	1448-28
F4725BM	831-105
F4725BM	1448-29
F4726BC	1448-32
F4726BM	1448-33
F4731BC	835-23
F4731BC	3857-16
F4731BM	835-24
F4731BM	3857-17
F4734BC	819-150
F4734BC	2876-16
F4734BM	819-151
F4734BM	2876-17
F4735BC	1448-34
F4735BM	1448-35
F525	★ **1050**
F64K-12	3827-23
F64K-15	3827-45
F64K-20	3827-73
F68-PEP	2009-35
F6810	3832-38
F681488	1458-2
F68316	3849-53
F68332	3850-23
F6850	2900-2
F6856	2901-36
F68A10	3832-33
F68A332	3849-120
F68B10	3832-29
F68B308	3849-19
F8	¶ 363-14
F9414STC	1469-113
F9414STM	1469-114
F9440	1435-3
F9440M	1463-93
F9445	★ **1609**
	1435-4
F944516	1463-94
F944518	1463-95
F944520	1463-96
F944524	1463-97
F9450	★ **1607**
	844-59
	¶ 366-16
F9450C	★ **1607**
	1435-5

Arranged alphanumerically from left to right.

ADVERTISERS' PRODUCT INDEX

Fairchild (Cont'd)

Device	Page-Line
F9450M	★ **1607**
	1435-6
F9451	★ **1608**
	1463-99
F9452	★ **1608**
	1463-98
FAIRCAD	4459-25
FAIRCAD	4483-7
FAIRCAD	4915-3
FAIRLOGS	4957-1
FAIRLOGS/PFAULT	4971-1
FAIRLOGS/PFAULT	5030-1
FARCAD	★ **4622**
FGC0500	★ **4621**
	4442-15
FGC0900	★ **4621**
	4442-17
FGC1200	★ **4621**
	4442-18
FGC1900	★ **4621**
	4442-19
FGC2400	★ **4621**
	4442-21
FGC3200	★ **4622**
	4442-23
FGC4000	★ **4621**
	4442-24
FGC6000	★ **4621**
	4442-25
	¶ 443-9
FGE0050	★ **4621**
	4442-14
FGE0500	★ **4621**
	4442-16
FGE2000	★ **4621**
	4442-20
	¶ 443-10
FGE2500	★ **4621**
	4442-22
FQ3467	3310-54
FQ3468	3310-55
FQ3724	3310-34
FQ3725	3310-35
FS-1	1813-11
Formulator Mark III	1813-12
GLOW-16	2025-21
HD10104	846-4
LM1014	2895-128
LM1014A	2895-129
MK38P70	¶ 366-16
Macro-50 Assembler	★ **1610**
Macrologic Bipolar	1411-15
Macrologic CMOS	1411-16
Microflame 1	1813-13
PEP-45	2023-28
PEP-68	1813-14
SBC-50	★ **2101**
SH123	3385-6
SH1605A	3395-102
SH223	3385-7
SH323	3385-8
SPARK-16	2025-28
SSI101A	1469-8
SSI114	1469-9
SSI116	1469-10
SSI117-2	1469-11
SSI117-4	1469-12
SSI117-5	1469-13
SSI117-6	1469-14
SSI117-8	1469-15
Supermacros	4485-17
Suppermacros	4485-17
ZN54170	3830-82
A714	¶ 407-17
A759	¶ 406-17
A791	¶ 406-17
μ78HG	3393-8
μA0802AC	2852-7
μA0802BC	2854-28
μA0802CC	2854-29
μA0802M	2852-8
μA101AM	3346-109
μA101M	3353-51
μA105M	3394-10
μA108	3347-5
μA108AM	3342-30
μA108M	3346-50
μA109M	3384-57
μA111M	3312-42
μA117M	3393-77
μA123	3385-9
μA124M	3334-143
μA138	3393-39
μA139M	3316-2
μA1458	3330-2
μA1458CC	3367-7
μA1488C	2881-41
μA1489AC	2885-28
μA1489C	2885-19
μA148M	3371-33
μA150	3393-11
μA1558M	3366-9
μA198M	3404-9
μA201AM	3346-110
μA201C	3356-33
μA208AM	3342-31
μA208M	3346-51
μA212A	★ **3567**
	3379-112
μA223	3385-10
μA224	3334-144
μA2240C	3383-18
μA238	3393-40
μA239C	3316-16
μA2460	1468-103
μA2461	1468-104
μA2480	3308-67
μA2480	1469-21
μA2482	3308-60
μA2483	3308-61
μA2484	3308-62
μA2485	3308-63
μA2486	3308-64
μA2487	3308-65
μA2488	3308-66
μA248C	3372-33
μA2490	1468-99
μA2491	1468-100
μA2492	1468-101
μA24H80	1469-22
μA250	3393-12
μA26L531	★ **3569**
μA26L532	★ **3572**
μA26LS31	2884-15
μA26LS32C	2887-30
μA26LS32M	2887-31
μA2901	3316-40
μA298C	3404-10
μA301AC	3356-20
μA3054	★ **3575**
	3377-115
μA3057	★ **3575**
	3377-78
μA305AC	3394-17
μA305C	3393-1
μA308AC	3342-52
μA309C	3384-58
μA311C	3313-14
μA317C	3393-78
μA323	3385-11
μA324C	3334-145
μA3302	3316-57
μA3303C	3334-170
μA338	3393-41
μA339C	3316-17
μA3403C	3334-171
μA3486	2887-27
μA3487	★ **3571**
	2884-6
μA348C	3372-34
μA350	3393-13
μA3680	★ **3577**
	3380-111
μA3680C	★ **3577**
	3380-121
μA376C	3394-3
μA4136C	3372-50
μA4136M	3371-55
μA431AC	3393-64
μA494C	3395-103
μA494M	3395-104
μA555C	3383-34
μA556C	3383-79
μA565JC	2862-47
μA565KC	2859-100
μA565SM	2862-48
μA565TM	2859-101
μA571JC	2839-13
μA571KC	2838-42
μA571SM	2839-14
μA5800	★ **3576**
μA592C	3306-61
μA592M	3306-62
μA709AM	3346-122
μA709C	3356-36
μA709M	3353-39
μA710C	3313-5
μA710M	3312-29
μA711C	3314-31
μA711M	3314-10
μA714C	3357-211
μA714EC	3338-47
μA714M	3341-21
μA714M	3338-43
μA715C	3334-225
μA715C	3356-31
μA715M	3334-226
μA715M	3354-14
μA723C	3393-114
μA723M	3393-115
μA725AM	3343-20
μA725C	3346-148
μA725EC	3341-62
μA725M	3345-5
μA726M	3404-124
μA727M	3307-94
μA733C	3307-146
μA733M	3307-147
μA7392	¶ 420-17
μA7392C	2895-142
μA739C	3319-41
μA739C	3367-45
μA741AM	3343-41
μA741C	3355-27
μA741EC	3343-40
μA741M	3353-42
μA747AM	3363-55
μA747C	3367-8
μA747EC	3363-56
μA747M	3366-10
μA748C	3355-37
μA749C	3363-68
μA759C	3330-98
μA759C	3334-77
μA759C	3355-17
μA759M	3330-99
μA759M	3334-78
μA759M	3346-214
μA760C	3313-9
μA760M	3313-10
μA77000	3334-81
μA77000	3356-47
μA771AC	3346-28
μA771AM	3346-29
μA771BC	3352-10
μA771BM	3352-11
μA771C	3357-28
μA771LC	3357-122
μA772AC	3362-48
μA772AM	3362-49
μA772BC	3365-12
μA772BM	3365-13
μA772C	3368-19
μA772LC	3368-40
μA774BC	3371-18
μA774BM	3371-19
μA774C	3373-34
μA774LC	3373-49
μA776C	3347-12
μA776C	3334-24
μA776C	3366-47
μA776M	3334-25
μA776M	3365-16
μA7805C	3384-82
μA7805M	3384-83
μA7806C	3385-96
μA7808C	3386-37
μA7808M	3386-38
μA7812C	3387-24
μA7812M	3387-25
μA7815C	3388-24
μA7815M	3388-25
μA7818C	3388-123
μA7818M	3388-124
μA7824C	3389-85
μA7824M	3389-86
μA7885C	3386-76
μA78GC	3393-7
μA78H05	3385-53
μA78H05A	3385-54
μA78H08C	3386-67
μA78H12A	3387-91
μA78L05C	3384-5
μA78L09C	3386-78
μA78L12C	3386-108
μA78L15C	3387-110
μA78L62C	3385-127
μA78L82C	3386-72
μA78M05C	3384-35
μA78M05M	3384-36
μA78M06C	3385-76
μA78M06M	3385-77
μA78M08C	3386-17
μA78M08M	3386-18
μA78M12C	3386-122
μA78M12M	3386-123
μA78M15C	3387-124
μA78M15M	3387-125
μA78M24C	3389-60
μA78M24M	3389-61
μA78MGC	3393-6
μA78P05	3385-66
μA78P12	3387-97
μA78S40	¶ 428-2
μA78S40C	3395-105
μA78S40M	3395-106
μA7905C	3390-29
μA7905M	3390-30
μA7908C	3390-109
μA7908M	3390-104
μA7912C	3391-36
μA7912M	3391-37
μA7915C	3391-102
μA7915M	3391-103
μA798C	3366-55
μA79GC	3394-58
μA79HG	3394-51
μA79M05AC	3390-12
μA79M05M	3390-13
μA79M08AC	3390-105
μA79M12AC	3391-20
μA79M12M	3391-21
μA79M15AC	3391-85
μA79M15M	3391-86
μA79MGC	3394-57
μA9616HC	2881-20
μA9616HEC	2881-21
μA9616HM	2881-22
μA96172	★ **3568**
	2884-29
μA96173	★ **3570**
	2887-37
μA96174	★ **3568**
	2884-30
μA96175	★ **3570**
	2887-38
μA96176	★ **3574**
	2891-21
μA96177	★ **3573**
	2891-19
μA96178	★ **3573**
	2891-20
μA962AM	886-133
μA9636AC	2881-12
μA9636AM	2881-13
μA9637AC	2886-49
μA9637AM	2886-50
μA9638C	2883-54
μA9638M	2883-55
μA9639A	★ **3578**
	2886-44
μA9639AC	★ **3578**
	2886-55
μA9640C	888-87
μA9640C	2889-42
μA9640M	888-88
μA9640M	2889-35
μA9643C	2892-105
μA9645C	2893-9
μA9650C	3398-120
μA9665C	2894-103
μA9665C	3310-102
μA9666C	2894-121
μA9666C	3310-103
μA9666M	2894-122
μA9666M	3310-104
μA9667C	2894-74
μA9667C	3310-105
μA9667M	2894-75
μA9667M	3310-106
μA9668C	2894-55
μA9668C	3310-107
μA9668M	2894-56
μA9668M	3310-108
μA9706C	2850-13
μA9708	3399-2
μA9708	1469-49
μA9708C	2837-40
μA9708M	2837-41

Force Computers

Device	Page-Line
ADDA-1	2045-6
ASCU-1	2043-32
ASCU-2	2044-35
CPU-1	2029-7
CPU-2	2027-14
CPU-3	2027-15
CPU-4	2027-16
DRAM-1	2045-13
DRAM-2	2045-22
DRAM-E3	2045-21
GDC-1	2027-12
OPIO-1	2045-7
PIO-1	2044-50
RR-1	2045-54
SASI-1	2027-13
SIO-1	2044-51
SRAM-1	2045-18
SRAM-2	2045-17
WFC-1	2043-37

Fujitsu America

Device	Page-Line
FBC304D2A	★ **2106**
FBC304D2A	★ **2107**
	2046-24
FBC304M1A	★ **2106**
	2046-23
FBC308C1A	2046-32
FBC401M3	2046-15
FBC402M3	2046-16
FBC404C3A	2046-34
FBC404C3S	2046-33
FBC404M3	★ **2102**
	2046-18
FBC408D3	2046-35
FBC501M4	★ **2103**
FBC501M4	★ **2104**
	2046-17
	2046-19
FBC502M4	★ **2103**
	2046-20
	2046-21
FBC503M4	★ **2103**
	2046-22
FBC504D4	2046-37
FBC504M4	★ **2103**
FBC504M4	★ **2105**
FBM-4404P	2046-27
FBM-A002	2046-39
FBM-A003	2046-38
FBM-C128GA	2046-29
FBM-u404	2046-28
FBM31CA	★ **4016**
	2046-31
FBM31DB	★ **4016**
	3826-8
FBM32DA	★ **4016**
	3826-9
FBM42DA	★ **4017**
	3826-12
FBM43CA	★ **4017**
	2046-30
FBM43DA	★ **4017**
	3826-11
MBC404M3T	2042-61
MDC404D3	2046-36

Fujitsu Microelectronics, Inc.

Device	Page-Line
27128	¶ 436-15
27128	¶ 436-16
2732	¶ 436-16
2732A	¶ 436-11
2732A	¶ 436-15
2732A	¶ 436-16
2764	¶ 436-15
2764	¶ 436-16
27C128	¶ 436-16
27C64	¶ 436-15
27C64	¶ 436-16
AV, UM	4485-35
AV Library	4478-18
AVM, UM	4485-35
B1100	★ **4625**
	4444-35
B2000	★ **4625**
	4444-37
B240	★ **4625**
	4444-42
B350	★ **4625**
	4444-34
B600	★ **4625**
	4444-49
Bipolar	4485-32
C1002AVM	★ **4624**
	4444-50
C1200	★ **4624**
C1275H	★ **4624**
	4444-52
C1275HB	★ **4624**
	4444-53
C1600AVB	★ **4624**
	4444-51
C2000AVB	★ **4624**
	4445-1
C2000H	★ **4624**
	4444-36
C2301AVM	★ **4624**
	4445-2
C2600AV	★ **4624**
	4445-3
C2600VH	★ **4624**
	4445-4
C3000	★ **4624**
C3000AVB1	4444-40
C3000AVB11	4444-41
C3900AV	★ **4624**
	4445-5
C3900H	★ **4624**
	4444-38
C3900VH	★ **4624**
	4445-6
C4002AVM	★ **4624**
	4445-7
C440H	★ **4624**
	4444-43
C440HB	★ **4624**
	4444-44
C5000	★ **4624**
C5000AV1	4445-8
C500AVB	★ **4624**
	4444-45
C6600AV	★ **4624**
	4445-9
C6600VH	★ **4624**
	4445-10
C770H	★ **4624**
	4444-47
C770HB	★ **4624**
	4444-48
C8000AV	★ **4624**
	4445-11
C8000VH	★ **4624**
	4444-39
C800AVB	★ **4624**
	4444-46
CMOS Library	4478-20
E3400	★ **4625**
ET3000	★ **4625**
FT5753	2897-144
FT5754	2897-145
FT5755	2897-146
LCAD	4459-30
LCAD	4459-35
MB10474A-15	3835-40
MB1412A	★ **1611**
	887-6
	★ **1611**
	2878-35
MB1422	887-1
MB1422	2892-68
MB1426	★ **1611**
	887-7
	★ **1611**
	2878-36
MB3712	★ **1611**
MB3713	★ **1611**
MB3714	★ **1611**
MB3720	3318-89
MB3730	★ **1611**
	3318-90
MB3731	★ **1611**
	3318-91
MB3752	★ **1611**

¶ Indicates page number in Application Note Directory.
★ Indicates additional data is provided on the page noted.

Device	Page-Line
Fujitsu Microelectronics Inc. (Cont'd)	
MB3759	★ 1611
	3395-110
MB3760	★ 1611
	3395-111
MB4052	2835-26
MB4053	2837-33
MB4053	2837-42
MB40547	★ 1611
MB40576	★ 1611
MB40748	★ 1611
MB40776	★ 1611
MB40778	★ 1611
MB4107	★ 1611
	1467-63
MB4111	1468-106
MB4112	1468-107
MB4204	3316-15
MB425	1456-112
MB426	1456-113
MB4316	2894-20
MB4316	1466-88
MB467	890-120
MB501	★ 1611
	891-34
	★ 1611
	3376-6
MB501L	★ 1611
	891-24
	★ 1611
	3376-7
MB502	★ 1611
	1458-24
MB503	★ 1611
	891-3
MB504	★ 1611
	891-14
MB505-24	891-41
MB505-24	3375-87
MB6001	3379-43
MB6002	3379-44
MB6021	★ 1611
	3377-116
MB6022	★ 1611
	3377-60
MB6024	★ 1611
	3377-117
MB7072E	847-65
MB7072E	3832-111
MB7072N	847-66
MB7072N	3832-115
MB7111E	3814-34
MB7111H	3814-18
MB7112E	3814-38
MB7112E-2	3814-39
MB7112H	3814-24
MB7113E	3814-89
MB7113H	3814-80
MB7114E	3814-92
MB7114E-2	3814-93
MB7114E-W	3814-94
MB7114H	3814-83
MB7115E	3815-33
MB7115H	3815-25
MB7116E	3815-36
MB7116E-W	3815-37
MB7116H	3815-27
MB7117E	3815-9
MB7117H	3815-6
MB7118E	3815-11
MB7118H	3815-7
MB7121E	3816-101
MB7121H	3816-91
MB7122E	3817-3
MB7122H	3816-93
MB7123E	3815-109
MB7123H	3815-90
MB7124E	3816-6
MB7124H	3815-95
MB7127H	3818-14
MB7127Y	3818-5
MB7128E	3818-31
MB7128E-W	3818-26
MB7128E-W	3818-32
MB7128H	3818-16
MB7128Y	3818-7
MB7128Y	3818-8
MB7131	3817-74
MB7131E	3817-105
MB7131H	3817-90
MB7132E	3817-108
MB7132E-W	3817-109
MB7132H	3817-92
MB7132Y	3817-78
MB7133E	3820-16
MB7133H	3820-4
MB7134E	3820-19
MB7134E	3849-67
MB7134H	3820-8
MB7134H	3849-66
MB7137E	3819-29
MB7137H	3818-111
MB7138E	3819-32
MB7138E-W	3818-27
MB7138E-W	3818-35
MB7138E-W	3849-32
MB7138H	3818-114
MB7138Y	3818-93
MB7141E	3820-51
MB7141H	3820-46
MB7142E	3820-52
MB7142E-W	3820-56
MB7142E-W	3849-71
MB7142H	3820-47
MB7143E	3821-62
MB7143H	3821-50
MB7144E	3821-65
MB7144E-W	3821-67
MB7144H	3821-53
MB7152-Y	3819-119
MB7152E	3820-17
MB7152E-W	3820-18
MB7152H	3820-20
MB7226-RA-20	3815-77
MB7232-RA-20	★ 4021
	3817-62
MB8118-10	3826-43
MB8118-12	3826-47
MB81256-10	3828-90
MB81256-10	3843-102
MB81256-12	3829-5
MB81256-15	3829-39
MB81257-10	3828-91
MB81257-12	3829-6
MB81257-15	3829-40
MB8128-10	3838-4
MB8128-15	3838-89
MB81416-10	3826-94
MB81416-12	3826-95
MB81416-15	3826-100
MB81461-12	3827-117
MB81461-15	3828-1
MB81464-10	★ 4019
	3827-100
MB81464-12	★ 4019
	3827-107
MB81464-15	★ 4019
	3827-124
MB8167A-45	3844-38
MB8167A-55	3844-55
MB8167A-70	3844-71
MB8167A-70W	3844-72
MB8168-45	3841-92
MB8168-70	3842-72
MB8168-70W	3842-73
MB81C258-10	3828-81
MB81C258-12	3828-104
MB81C258-15	3829-29
MB81C466-10	3827-98
MB81C466-12	3827-104
MB81C466-15	3827-119
MB81C67-35	3844-13
MB81C67-45	3844-26
MB81C68-35	3841-17
MB81C68-45	3841-55
MB81C68A-25	3840-122
MB81C71-45	3847-6
MB81C71-55	3847-25
MB81C75-35	3844-108
MB81C75-45	3845-6
MB81C78-45	3842-123
MB81C78-55	3842-131
MB81C79-45	3842-124
MB81C79-55	3842-132
MB81C81-55	3848-5
MB81C86-55	3847-71
MB81C86-70	3847-72
MB8264	¶ 438-3
MB8264A-10	3827-11
MB8264A-12	3827-24
MB8264A-15	3827-46
MB8264A-15W	3827-47
MB8264A-20W	3827-74
MB8265A-10	3827-12
MB8265A-12	3827-25
MB8265A-15	3827-48
MB8266A	¶ 439-17
MB8266A-10	3827-13
MB8266A-12	3827-26
MB8266A-15	3827-49
MB831000-15	3853-70
MB831000-20	3853-76
MB831124-35	★ 4019
	3853-94
MB83256	3852-117
MB8416	3838-103
MB8416-25W	3839-27
MB8416A-12	3838-18
MB8416A-12L	3838-19
MB8416A-15	3838-53
MB8416A-15L	3838-54
MB8417	3838-104
MB8417A-12	3838-20
MB8417A-12L	3838-21
MB8417A-15	3838-55
MB8417A-15L	3838-56
MB8418	3838-105
MB8418A-12	3838-22
MB8418A-12L	3838-23
MB8418A-15	3838-57
MB8418A-15L	3838-58
MB84256-100	3846-46
MB84256-150	3846-56
MB8464A-100	3843-17
MB8464A-70	3843-2
MB85101A-10	3827-103
MB85101A-12	3827-116
MB85102A-12	3828-64
MB85102A-15	3828-65
MB85103A-12	3828-31
MB85103A-15	3828-37
MB85108A-10	3828-100
MB85108A-12	3829-25
MB85201	★ 4019
MB87001	★ 1611
	3375-138
MB87003	★ 1611
	3378-40
MB87004	★ 1611
	3378-41
MB87007	3378-138
MB87008	3378-139
MB8764	★ 1611
	886-162
MB8795A	★ 1611
	1466-97
MB88200	★ 1611
MB88201	1450-52
MB88201	1405-11
MB88202	1450-53
MB88202	1405-12
MB88303	★ 1611
	3325-93
	★ 1611
	1468-58
MB88304	★ 1611
MB88305	★ 1611
MB88306	★ 1611
MB88307	★ 1611
MB88308	★ 1611
MB88309	★ 1611
MB88315	★ 1611
MB88316	★ 1611
MB88317	★ 1611
MB8840	★ 1611
MB88400	★ 1611
MB88401	1450-54
MB88401	1405-13
MB8841	1450-40
	¶ 369-2
	1405-14
MB88410	★ 1611
MB88411	1450-55
MB88411	1405-15
MB88413	1450-56
MB88413	1405-16
MB8842	1450-41
MB8842	1405-17
MB88420	★ 1611
MB88421	1450-57
MB88421	1405-18
MB88423	1450-58
MB88423	1405-19
MB8843	1450-42
MB8843	1405-20
MB8844	1450-43
MB8844	1405-21
MB8845	1450-44
MB8846	1450-45
MB8847	1450-46
MB8848	1450-47
MB8849	1450-48
MB8850	★ 1611
MB88500	★ 1611
MB88501	1450-59
MB88501	1405-22
MB88503	1450-60
MB88503	1405-23
MB8851	1450-31
MB8851	1405-24
MB8851A	1450-32
MB8851A	1405-25
MB8851L	1450-33
MB8851L	1405-26
MB8853	1450-34
MB8853	1405-27
MB88535	1450-61
MB88535	1405-28
MB88536	1450-62
MB88536	1405-29
MB8854	1405-30
MB88540	★ 1611
MB88541	1450-63
MB88541	1405-31
MB8854A	1450-35
MB8854A	1405-32
MB8854L	1450-36
MB8854L	1405-33
MB8855	1450-37
MB8857	1450-38
MB8858	1450-39
MB8866	1461-27
MB8866	1467-34
MB8868A	★ 1611
	2901-86
MB8876A	★ 1611
	1453-115
	1466-110
	¶ 379-4
MB8877A	★ 1611
	1453-116
	1466-111
	¶ 379-4
MB89311	★ 1611
	1466-107
MB89321	★ 1611
	1455-1
MB89322	★ 1611
	1457-130
MBL80186	★ 1611
	1461-59
	★ 1611
	1435-7
MBL80186-6	★ 1611
	1461-60
	★ 1611
	1435-8
MBL80188	★ 1611
	1417-3
MBL80188-6	★ 1611
	1417-4
MBL80286-4	★ 1611
	1462-14
	★ 1611
	1435-9
MBL80286-6	★ 1611
	1462-15
	★ 1611
	1435-10
MBL80286-8	★ 1611
	1462-16
	★ 1611
	1435-11
MBL8031	★ 1611
	1457-39
	★ 1611
	1417-5
MBL8035	★ 1611
	1456-13
	★ 1611
	1417-6
MBL8039	★ 1611
	1456-14
	★ 1611
	1417-7
MBL8041A	★ 1611
	1457-17
	1457-269
	1457-429
MBL8042	★ 1611
MBL8048	★ 1611
	1456-54
	★ 1611
	1417-8
MBL8051	★ 1611
	1457-46
	★ 1611
	1417-9
MBL8086	★ 1611
	1461-38
	★ 1611
	1435-12
MBL8086-1	★ 1611
	1461-39
	★ 1611
	1435-13
MBL8086-2	★ 1611
	1461-40
	★ 1611
	1435-14
MBL8088	★ 1611
	1462-44
MBL8088-2	★ 1611
	1462-45
MBL8089	★ 1611
	1461-63
MBL80C39	★ 1611
	1456-15
	★ 1611
	1417-10
MBL80C49	★ 1611
	1456-55
MBL82284	★ 1611
	1461-55
MBL82288	★ 1611
	1461-52
MBL8243	★ 1611
	1459-8
MBL8243E	★ 1611
	1457-164
MBL8243N	★ 1611
	1457-165
MBL8259A	★ 1611
	1461-126
MBL8282	★ 1611
	1462-32
MBL8283	★ 1611
	1462-24
MBL8284A	★ 1611
	1461-96
MBL8286	★ 1611
	1462-17
MBL8287	★ 1611
	1462-6
MBL8288	★ 1611
	1461-84
MBL8289	★ 1611
	1461-74
MBL82C43	1459-9
MBL82L43	★ 1611
MBL8649	★ 1611
MBL8742	★ 1611
MBL8749	★ 1611
	1456-5
MBL8764	844-60
MBL8C49	★ 1611
MBM100422A-7	849-10
MBM100422A-7	3832-93
MBM100470A-10	849-18
MBM100470A-10	3839-57
MBM100470A-15	3839-64
MBM100474A-10	3835-29
MBM100474A-15	3835-37
MBM100480	3844-2
MBM100480-15	3843-104
MBM100480-25	3844-3
MBM100484-15	3840-118
MBM10415AH	3834-49
MBM10422A-5	3832-92
MBM10422A-7	847-67
MBM10422A-7	3832-95
MBM10470A-10	847-85
MBM10470A-10	3839-58
MBM10470A-15	847-86
MBM10470A-15	3839-67
MBM10470A-20	847-87
MBM10470A-20	3839-73
MBM10474A-10	3835-32
MBM10480	★ 4021
	3844-7
MBM10480-15	★ 4021
	3843-105
MBM10480-25	★ 4021
	3844-8
MBM10484-15	3840-119
MBM10490-25	3846-91
MBM27128-20	3823-16
MBM27128-25	3823-29
MBM27128-25X	3823-40
MBM27128-30	3823-54
MBM27128-30W	3823-63
MBM27128-30X	3823-64
MBM2716	¶ 436-15
MBM2716	¶ 436-16
MBM27256-20	3824-27
MBM27256-25	3824-52
MBM27256-25X	3824-53
MBM27256-30	3824-74
MBM27256-30W	3824-75
MBM27256-30X	3824-76
MBM2732	¶ 436-11
MBM2732A-20	3820-72
MBM2732A-25	3820-80
MBM2732A-30	3820-86
MBM2732A-30X	3820-87
MBM27512-20	3824-94
MBM27512-25	3824-102
MBM27512-30	3824-108
MBM2764-20	3821-98
MBM2764-25	3822-11
MBM2764-30	3822-40
MBM2764-30X	3822-41
MBM27C1024-20	3825-5
MBM27C1024-25	3825-9
MBM27C1028-20	3825-4
MBM27C1028-20	3825-13
MBM27C1028-25	3825-8
MBM27C1028-25	3825-14
MBM27C256-20	★ 4019
	3824-11
MBM27C256-25	★ 4019
	3824-31
MBM27C256-25X	★ 4019
	3824-32
MBM27C256-30	★ 4019
	3824-57
MBM27C256-30W	★ 4019
	3824-58
MBM27C256-30X	★ 4019
	3824-59
MBM27C512-20	3824-92
MBM27C64	¶ 436-12
MBM27C64-20	3821-81
MBM27C64-25	3822-1
MBM27C64-25W	3821-110
MBM27C64-25X	3821-111
MBM27C64-30	3822-28
MBM27C64-30W	3822-29
MBM27C64-30X	3822-26
MBM27C65-35	3813-86
MBM28C64-25	3813-84
MBM28C64-35	3813-87
MBM28C65-25	3813-85
MBM8167A-85W	3844-86
MBM8168-85W	3842-91
MBM93419	3832-22
MC8265	¶ 438-3
UH12000	4445-13
UH16000	4445-15
UH20000	4445-16
UM10000	4445-12
UM15000	4445-14
VH Library	4478-19
GE Semiconductor	
CADEXEC	4459-40
CADEXEC	4459-46
CADEXEC	4483-17
GE29C00	★ 4629
GE29C01	★ 4628
	1448-55
GE29C10	★ 4627
	1462-94
GE29C10-16	★ 4627
	1462-125
IGC10408	4445-19
IGC10756	4445-20
IGC11500	4445-22

Arranged alphanumerically from left to right.

GE Semiconductor (Cont'd)

Device	Page-Line
IGC20000	★ 4630
IGC20030	4445-18
IGC20100	4445-21
IGC20190	4445-23
IGC20290	4445-24
IGC20450	4445-25
IGC20620	4445-26
IGC21350	4445-27
ISC20000	★ 4626 4478-23

GigaBit Logic

Device	Page-Line
10G000	★ 1063 851-11
10G011	★ 1063 851-1
10G012	★ 1063 851-7
10G021	★ 1063 851-8
10G040	★ 1064 851-14
10G041	★ 1064 851-15
10G060	★ 1064 851-6
10G065	★ 1064 851-2
10G070	★ 1064 851-4
12G014	★ 1065 3832-91
16G010	★ 1064 851-18
	★ 1064 3311-40
16G011	★ 1064 851-19
	★ 1064 3311-41
16G020	851-21
16G020	3309-52
16G021	851-20
16G021	3309-51

Goldstar

Device	Page-Line
FD74LS367A	857-10
G374HCT283	★ 116
G374HCT283	★ 166
GD74HC00	★ 1066 825-51
GD74HC02	★ 1066 827-120
GD74HC04	★ 1066 811-1
GD74HC05	★ 1066 811-2
GD74HC07	★ 1066 808-147
GD74HC08	★ 1066 824-54
GD74HC10	★ 1066 824-180
GD74HC11	★ 1066 824-2
GD74HC112	★ 1066 823-73
GD74HC123	★ 1066 834-66
GD74HC125	★ 1066 808-77
GD74HC132	★ 1066 838-143
GD74HC138	★ 1066 818-8
GD74HC139	★ 1066 817-102
GD74HC14	★ 1066 839-16
GD74HC145	★ 1066 817-7
GD74HC151	★ 1066 833-30
GD74HC153	★ 1066 833-83
GD74HC155	★ 1066 817-85
GD74HC157	★ 1066 832-61
GD74HC158	★ 1066 832-101
GD74HC161A	★ 1066 811-177
GD74HC163	★ 1066 811-123
GD74HC164	★ 1066 836-37
GD74HC165	★ 1066 835-183
GD74HC173	★ 1066 820-136
GD74HC174	★ 1066 821-1
GD74HC175	★ 1066 820-91
GD74HC193	★ 1066 812-46
GD74HC20	★ 1066 824-120
GD74HC21	★ 1066 823-162
GD74HC240	★ 1066 839-73
GD74HC241	★ 1066 839-149
GD74HC244	★ 1066 840-70
GD74HC245	★ 1066 841-119
GD74HC257	★ 1066 832-137
GD74HC259	★ 1066 830-172
GD74HC27	★ 1066 827-59
GD74HC273	★ 1066 821-58
GD74HC283	★ 1066 806-37
GD74HC30	★ 1066 825-148
GD74HC32	★ 1066 826-130
GD74HC322	★ 1066 836-69
GD74HC365	★ 1066 809-117
GD74HC367	★ 1066 809-118
GD74HC373	★ 1066 829-120
GD74HC374	★ 1066 822-59
GD74HC377	★ 1066 821-105
GD74HC393	★ 1066 812-175
GD74HC42	★ 1066 817-8
GD74HC51	★ 1066 826-45
GD74HC670	★ 1066 838-1
GD74HC74	★ 1066 820-19
GD74HC85	★ 1066 806-122
GD74HC86	★ 1066 828-26
GD74HC93	★ 1066 813-1
GD74HCT00	★ 1066 825-71
GD74HCT02	★ 1066 827-145
GD74HCT04	★ 1066 811-28
GD74HCT05	★ 1066
GD74HCT07	★ 1066 808-151
GD74HCT08	★ 1066 824-75
GD74HCT10	★ 1066 825-8
GD74HCT11	★ 1066 824-20
GD74HCT112	★ 1066 823-90
GD74HCT123	★ 1066 834-79
GD74HCT125	★ 1066 808-102
GD74HCT14	★ 1066 839-31
GD74HCT153	★ 1066 833-94
GD74HCT155	★ 1066
GD74HCT157	★ 1066 832-83
GD74HCT158	★ 1066 832-118
GD74HCT161A	★ 1066 812-6
GD74HCT163	★ 1066 811-143
GD74HCT164	★ 1066 836-54
GD74HCT165	★ 1066 836-13
GD74HCT173	★ 1066 820-153
GD74HCT174	★ 1066 821-21
GD74HCT175	★ 1066 820-110
GD74HCT193	★ 1066 812-75
GD74HCT20	★ 1066 824-137
GD74HCT21	★ 1066 823-171
GD74HCT240	★ 1066 839-98
GD74HCT241	★ 1066 839-176
GD74HCT244	★ 1066 840-87
GD74HCT245	★ 1066 841-152
GD74HCT257	★ 1066 832-153
GD74HCT259	★ 1066 831-1
GD74HCT27	★ 1066 827-78
GD74HCT273	★ 1066 821-79
GD74HCT283	★ 1066
GD74HCT30	★ 1066 825-166
GD74HCT32	★ 1066 826-149
GD74HCT322	★ 1066
GD74HCT365	★ 1066 809-150
GD74HCT367	★ 1066 809-151
GD74HCT373	★ 1066 829-163
GD74HCT374	★ 1066 822-103
GD74HCT377	821-118
GD74HCT393	812-187
GD74HCT42	★ 1066 817-27
GD74HCT51	★ 1066
GD74HCT74	★ 1066 820-39
GD74HCT85	★ 1066 806-123
GD74HCT86	★ 1066 828-50
GD74HCT93	★ 1066 813-6
GD74LS00	★ 1066 871-26
GD74LS02	★ 1066 874-22
GD74LS03	★ 1066 871-170
GD74LS04	★ 1066 857-115
GD74LS05	★ 1066 857-160
GD74LS06	★ 1066 857-161
GD74LS07	★ 1066 856-151
GD74LS08	★ 1066 869-110
GD74LS09	★ 1066 869-148
GD74LS10	★ 1066 870-142
GD74LS107	★ 1066 867-177
GD74LS109	★ 1066 867-126
GD74LS11	★ 1066 869-27
GD74LS112	★ 1066 868-93
GD74LS122	★ 1066 880-117
GD74LS123	★ 1066 880-151
GD74LS125A	★ 1066 856-103
GD74LS126	★ 1066 856-128
GD74LS132	★ 1066 887-160
GD74LS136	★ 1066 874-72
GD74LS138	★ 1066 863-116
GD74LS139	★ 1066 863-16
GD74LS14	★ 1066 888-38
GD74LS145	★ 1066 862-106
GD74LS151	★ 1066 879-174
GD74LS153	★ 1066 877-140
GD74LS154	★ 1066 863-179
GD74LS155	★ 1066 863-80
GD74LS156	★ 1066 863-49
GD74LS157	★ 1066 879-9
GD74LS158	★ 1066 878-94
GD74LS16	★ 1066 857-162
GD74LS161A	★ 1066 858-153
GD74LS163A	★ 1066
GD74LS164	★ 1066 882-6
	★ 1066 3856-43
GD74LS165	★ 1066 882-56
	★ 1066 3855-122
GD74LS166	★ 1066 882-71
	★ 1066 3855-123
GD74LS17	★ 1066 856-152
GD74LS174	★ 1066 866-51
GD74LS175	★ 1066 864-283
GD74LS191	★ 1066 859-177
GD74LS193	★ 1066 860-37
GD74LS194A	★ 1066 881-135
GD74LS195	★ 1066 881-45
GD74LS20	★ 1066 870-14
GD74LS21	★ 1066 868-161
GD74LS221	★ 1066 880-131
GD74LS240	★ 1066 883-153
	★ 1066 2882-48
GD74LS241	★ 1066 884-35
	★ 1066 2881-62
GD74LS243	★ 1066 883-73
	★ 1066 2888-39
GD74LS244	★ 1066 884-86
	★ 1066 2882-1
GD74LS245	★ 1066 885-104
	★ 1066 2890-25
GD74LS251	★ 1066 880-51
GD74LS253	★ 1066 878-46
GD74LS257A	★ 1066 879-48
GD74LS258	★ 1066 878-134
GD74LS259	★ 1066 875-140
GD74LS27	★ 1066 865-54
GD74LS273	★ 1066 866-152
GD74LS280	★ 1066 889-23
GD74LS283	★ 1066 856-41
GD74LS299	★ 1066 882-142
GD74LS30	★ 1066 872-27
GD74LS32	★ 1066 873-53
GD74LS322	★ 1066 856-76
GD74LS365A	★ 1066 857-11
	★ 1066 2883-5
GD74LS366	★ 1066 858-21
	★ 1066 2883-11
GD74LS367A	★ 1066 2883-6
GD74LS368	★ 1066 858-22
	★ 1066 2883-12
GD74LS373	★ 1066 876-12
GD74LS374	★ 1066 867-12
GD74LS377	★ 1066 867-42
GD74LS38	★ 1066 871-105
GD74LS390	★ 1066 861-36
GD74LS393	★ 1066 859-30
GD74LS395A	★ 1066 881-105
GD74LS42	★ 1066 862-134
GD74LS51	★ 1066 872-92
GD74LS541	★ 1066 884-36
	★ 1066 2882-2
GD74LS573	★ 1066 876-13
GD74LS590	★ 1066 859-101
GD74LS612	★ 1066 887-34
GD74LS640	★ 1066 885-12
	★ 1066 2890-26
GD74LS646	★ 1066 886-23
	★ 1066 2890-56
GD74LS670	★ 1066 877-19
	★ 1066 3830-95
GD74LS73	★ 1066 867-178
GD74LS74A	★ 1066 864-238
GD74LS75	★ 1066 875-43
GD74LS85	★ 1066 854-49
GD74LS86	★ 1066 874-118
GD74LS90	★ 1066 860-75
GD74LS92	★ 1066 862-17
GD74LS93	★ 1066 859-65
GD74LS95	★ 1066 881-76
	★ 1066 3854-54
GD74S00	★ 1066 871-40
GD74S04	★ 1066 857-130
GD74S08	★ 1066 869-125
GD74S10	★ 1066 870-157
GD74S112	★ 1066 868-105
GD74S138	★ 1066 863-132
GD74S139	★ 1066 863-31
GD74S157	★ 1066 879-25
GD74S163	★ 1066 859-21
GD74S174	★ 1066
GD74S188	★ 1066
GD74S189	★ 1066
GD74S240	★ 1066 883-168
	★ 1066 2882-49
GD74S251	★ 1066 880-63
GD74S280	★ 1066 889-34
GD74S288	★ 1066
GD74S299	★ 1066 882-150
	★ 1066 3855-96
GD74S32	★ 1066 873-68
GD74S374	★ 1066
GD74S51	★ 1066 872-108
GD74S74	★ 1066 864-253
GD74S85	★ 1066 854-75
GD74S86	★ 1066
GD75188	2881-42
GD75189A	2885-40
GL2470	★ 3580 3326-122
GL317	★ 3580 3393-79
GL3201	★ 3580 3326-32
GL3202	★ 3580 3326-89
GL324	★ 3580 3334-146
GL3401	★ 3580 3325-100
GL3504	★ 3580
GL358	★ 3580 3334-129
GL393	★ 3580 3313-51
GL394	★ 3580 3316-18
GL4558	★ 3580 3366-3
GL4559	★ 3580 3372-5
GL494	★ 3580 3395-112

¶ Indicates page number in Application Note Directory.
★ Indicates additional data is provided on the page noted.

Goldstar (Cont'd)

Device	Page-Line
GL495	★ **3580**
	3395-113
GL5501	★ **3580**
	3319-42
GL5901	★ **3580**
	3321-89
GL6801	★ **3580**
	3382-59
GL6901	★ **3580**
	3381-33
GL7101	★ **3580**
	3327-135
GL7401	★ **3580**
	2895-116
GL7805	★ **3580**
	3384-84
GL7808	★ **3580**
	3386-39
GL7812	★ **3580**
	3387-26
GL7815	★ **3580**
	3388-26
GL7824	★ **3580**
	3389-87
GL7905	★ **3580**
	3390-31
GL7909	★ **3580**
	3390-128
GL7912	★ **3580**
	3391-38
GL7915	★ **3580**
	3391-104
GL7924	★ **3580**
	3392-56
GL9373	★ **3580**
	3322-154
GM231014-20	3853-82
GM231014-25	3853-91
GM231024	★ **4022**
GM23512-10	★ **4022**
	3853-40
GM23512-12	★ **4022**
	3853-44
GM23512-20	★ **4022**
	3853-49
GM27HC64	★ **4022**
	3821-35
GM4043	★ **3580**
	3323-17
GM5036	★ **3580**
	2848-3
GM555	★ **3580**
	3383-59
GM556	★ **3580**
	3383-69
GM6059	★ **3580**
	3382-60
GM6076	★ **3580**
	3378-130
GM62100	★ **3580**
	2829-14
	★ **3580**
	3378-8
GM62300	★ **3580**
	2829-15
	★ **3580**
	3378-19
GM7164P-10	★ **4022**
	3827-14
GM7164P-12	★ **4022**
	3827-27
GM7164P-15	★ **4022**
	3827-50
GM7601	★ **4022**
	3835-50
GM7602	★ **4022**
	3832-114
GM7604	★ **4022**
	3839-75
GM7616	★ **4022**
	3844-27
GM7617	★ **4022**
	3841-18
GM7664	★ **4022**
	3847-26
GM7665	★ **4022**
GM9458	★ **3580**
LL3020	4445-31
LL3030	4445-32
LL3040	4445-33

Device	Page-Line
LL3060	4445-34
LL3080	4445-35
LL3110	4445-38
LL3130	4445-39
LL3170	4445-42
LL3210	4445-43
LL3250	4445-46
LL5080	4445-37
LL5140	4445-40
LL5220	4445-45
LL5320	4445-48
LL5420	4446-1
LL5600	4446-3
LL7080	4445-36
LL71000	4446-6
LL7140	4445-41
LL7220	4445-44
LL7320	4445-47
LL7420	4446-2
LL7600	4446-4
LL7840	4446-5
TD74LS163A	859-8
Z8400	★ **1612**
	1460-62
Z8420	★ **1612**
	1460-119
Z8430	★ **1612**
	1460-88
Z8440	★ **1612**
	1460-132
Z8470	★ **1612**
	1461-16

Gould AMI Semiconductors

Device	Page-Line
CA	4459-53
CBD	4479-3
CCB	4479-4
CCB	4479-9
CCB	4479-12
CCD	4479-7
CCF	4479-6
CCF	4479-10
CELL-BASED CUSTOM	★ **4632**
CIPAR	4483-23
DLM CMOS	4479-8
GA1000D	★ **4632**
GA1000D	★ **4632**
	4446-15
GA2000D	★ **4632**
GA2000D	★ **4632**
	4446-17
GA3000D	★ **4632**
	4446-19
GA4000D	★ **4632**
	4446-21
GA500	★ **4632**
	4446-9
GA500D	★ **4632**
GA500D	★ **4632**
	4446-10
GB10000D	★ **4632**
	4446-25
GB1000D	★ **4632**
	4446-14
GB2000D	★ **4632**
	4446-18
GB3000D	★ **4632**
	4446-20
GB4000D	★ **4632**
	4446-22
GB6000D	★ **4632**
	4446-23
GB8000D	★ **4632**
	4446-24
S1602	2901-87
S2000	¶ 364-6
S2000	¶ 366-8
S2000	¶ 366-11
S2000	¶ 366-12
S2000	¶ 381-11
S2000/2150	¶ 366-9
S2114H	¶ 438-17
S23128A	3852-54
S23128B	3852-24
S23131	3852-55
S23256B	★ **4023**
	3852-127
S23256C	★ **4023**
	3852-83

Device	Page-Line
S2333	3849-121
S2350	2901-98
S2350	1470-49
S2364A	3851-58
S2364B	3850-121
S25089	3382-61
S2550A	3381-58
S2559	¶ 413-7
S2559E	3382-62
S2559F	3382-63
S2560G	3378-73
S2561	3382-30
S25610	3378-125
S2563	3378-126
S2569	3382-103
S2569A	3382-104
S2579	3382-64
S25920	3378-129
S2709	3320-68
S2709	3320-87
S2709	3320-123
S2709A	3320-81
S2742	¶ 420-12
S2743	¶ 420-12
S28214	843-131
S2859	3382-65
S3506	★ **3590**
	3377-79
S3507	★ **3590**
	3377-118
S35212	★ **3582**
	3380-37
S35212A	★ **3582**
	3380-38
S35213	★ **3584**
	3379-109
S3522	3380-34
S3524	3379-12
S3525A	3377-16
S3525A	3377-27
S3525A/B	¶ 414-2
S3526B	★ **3591**
	3382-57
S3528	★ **3592**
	3379-53
S3529	★ **3593**
	3379-79
S3530	★ **3586**
	3380-4
S38256B	3852-128
S44231	3377-77
S44232	3377-114
S44233	3377-74
S44234	3377-112
S4520	★ **3166**
	2874-87
S4521	2877-95
S4521	2895-44
S4527	★ **3167**
S4534	★ **3168**
	2877-74
	2895-41
S4535	★ **3169**
	2877-96
	2895-45
S6514	3836-86
S6551	2900-3
S6551A	2900-4
S65C51	★ **1613**
	1465-25
S6800	1454-57
S6800	1417-24
S6801	1453-142
S6801	1417-25
S6802	1454-96
	¶ 369-12
	¶ 376-17
	1417-26
S6803	1454-37
S6803	1417-27
S6803N/R	1454-38
S68045	1454-151
	¶ 369-13
S68047	¶ 363-6
S6805	1453-143
S6805	1417-28
S6809	1454-84
S6809	1417-29
S6809(E)	1454-71
S6821	1455-42
S6821	1469-124
S6840	1470-14

Device	Page-Line
S6845E	1465-68
S6846	1470-33
	¶ 376-17
S68488	¶ 379-5
S6850	2900-5
S6850	1454-123
S6850	1469-86
S6852	1470-50
S6854	1454-114
S68A00	1454-58
S68A02	1454-97
S68A02	1417-30
S68A045	1454-152
S68A09	1454-85
S68A09	1417-31
S68A09(E)	1454-72
S68A21	1455-43
S68A21	1469-125
S68A364	3851-59
S68A40	1470-15
S68A50	1454-124
S68A50	1469-87
S68A52	1470-51
S68A54	1454-115
S68B00	1454-59
S68B02	1454-98
S68B045	1454-153
S68B09	1454-86
S68B09	1419-1
S68B09(E)	1454-73
S68B21	1455-44
S68B21	1469-126
S68B364	3850-105
S68B40	1470-16
S68B50	1454-125
S68B50	1469-88
S68B52	1470-52
S68B54	1454-116
S7720	★ **3588**
	844-70
	★ **3588**
	3379-33
S8980	3379-20
S9900	1462-53
	¶ 364-13
	¶ 366-13
	¶ 369-14
	¶ 380-13
	1435-15
S9901	1462-82
S9902	1462-62
S9980A	1419-2
SCEPTRE	4483-24
SCEPTRE II	4918-1
SCEPTRE II	4962-3
SCEPTRE II	4998-2
SCEPTRE II	5015-1
SLM CMOS	4479-5
UA-1	4446-7
UA-2	4446-8
UA-3	4446-11
UA-4	4446-12
UA-5	4446-13
UA-6	4446-16

GTE Microcircuits

Device	Page-Line
50500B	4446-26
51000B	4446-28
51500B	4446-30
52000B	4446-33
816	★ **1617**
ADV-CMOS	4479-13
ADV-CMOS	4479-14
ADV-CMOS	4479-15
ALIS	4459-62
G50500B	4446-27
G51000B	4446-29
G51500B	4446-31
G52000B	4446-32
G5364-25	3850-89
G5364-3	3851-18
G5364-4	3851-68
G5365-25	3850-95
G5365-3	3851-19
G5365-4	3851-69
G65SC00	¶ 369-4
G65SC02	★ **1615**
	1453-30
	★ **1615**
	1419-3

Device	Page-Line
G65SC03	★ **1615**
	1453-31
	★ **1615**
	1419-4
G65SC04	★ **1615**
	1453-32
	★ **1615**
	1419-5
G65SC05	★ **1615**
	1453-33
	★ **1615**
	1419-6
G65SC06	★ **1615**
	1453-34
	★ **1615**
	1419-7
G65SC07	★ **1615**
	1453-35
	★ **1615**
	1419-8
G65SC102	★ **1615**
	1453-36
	★ **1615**
	1419-9
G65SC103	★ **1615**
	1453-37
	★ **1615**
	1419-10
G65SC104	★ **1615**
	1453-38
	★ **1615**
	1419-11
G65SC105	★ **1615**
	1453-39
	★ **1615**
	1419-12
G65SC106	★ **1615**
	1453-40
	★ **1615**
	1419-13
G65SC107	★ **1615**
	1453-41
	★ **1615**
	1419-14
G65SC112	★ **1615**
	1453-42
	★ **1615**
	1419-15
G65SC115	★ **1615**
	1453-43
	★ **1615**
	1419-16
G65SC12	★ **1615**
	1453-44
	★ **1615**
	1419-17
G65SC13	★ **1615**
	1453-45
	★ **1615**
	1419-18
G65SC14	★ **1615**
	1453-46
	★ **1615**
	1419-19
G65SC15	★ **1615**
	1453-47
	★ **1615**
	1419-20
G65SC150	★ **1616**
	1453-92
	¶ 385-14
	★ **1616**
	1419-21
G65SC151	1453-93
G65SC21	1453-117
G65SC22	1453-118
G65SC32	1453-135
G65SC51	1453-101
G65SC802	★ **1617**
	1463-1
	★ **1617**
	1433-19
G65SC816	1463-2
G65SC816	1433-20
G74SC137	818-150
G74SC138	818-76
G74SC139	817-160
G74SC240	839-133
G74SC241	840-38
G74SC244	840-39
G74SC245	841-184
G74SC245	2890-57

Device	Page-Line
G74SC373	830-19
G74SC374	822-151
G8860X	3381-136
G8865X	3377-28
G8870	★ **3594**
	3382-5
G8912B	3379-62
GEM-1	1813-15

Harris Semiconductor

Device	Page-Line
15530	¶ 400-3
29C51C	3377-102
6408	¶ 400-3
80C86	★ **682**
80C86	★ **1618**
80C86	★ **1631**
80C86	★ **4029**
80C86	★ **4654**
	1461-49
	¶ 369-8
	¶ 376-7
	¶ 376-8
	¶ 379-17
	★ **682**
	★ **1618**
	★ **1631**
	★ **4029**
	★ **4654**
	1435-16
80C88	★ **1618**
	1462-46
82C37	★ **1620**
82C37	★ **1627**
82C50	★ **1620**
82C50	★ **1628**
	2900-15
	★ **1620**
	★ **1628**
	1461-72
82C52	★ **682**
82C52	★ **1619**
82C52	★ **1620**
82C52	★ **1629**
82C52	★ **1631**
82C52	★ **4029**
82C52	★ **4654**
	2901-73
	★ **682**
	★ **1619**
	★ **1620**
	★ **1629**
	★ **1631**
	★ **4029**
	★ **4654**
	1461-138
82C54	★ **682**
82C54	★ **1619**
82C54	★ **1620**
82C54	★ **1631**
82C54	★ **4029**
82C54	★ **4654**
	1461-133
82C55A	★ **682**
82C55A	★ **1619**
82C55A	★ **1621**
82C55A	★ **1631**
82C55A	★ **4029**
82C55A	★ **4654**
	1461-135
82C56	1461-119
82C59A	★ **682**
82C59A	★ **1619**
82C59A	★ **1621**
82C59A	★ **1631**
82C59A	★ **4029**
82C59A	★ **4654**
	1461-122
82C82	★ **682**
82C82	★ **1619**
82C82	★ **1622**
82C82	★ **1631**
82C82	★ **4029**
82C82	★ **4654**
	1462-33
	¶ 358-13
	¶ 376-9
82C83	★ **1619**
82C83	★ **1622**
	1462-25

Arranged alphanumerically from left to right.

Harris Semiconductor (Cont'd)

Device	Page-Line
82C84A	★ **682**
82C84A	★ **1619**
82C84A	★ **1623**
82C84A	★ **1631**
82C84A	★ **4029**
82C84A	★ **4654**
	1461-105
82C85	★ **1619**
82C85	★ **1623**
82C85	★ **1626**
82C85	★ **4029**
	1461-104
82C86	★ **1619**
82C86	★ **1622**
	1462-18
82C87	★ **1619**
82C87	★ **1622**
	1462-7
82C88	★ **682**
82C88	★ **1619**
82C88	★ **1623**
82C88	★ **1631**
82C88	★ **4029**
82C88	★ **4654**
	1461-85
82C89	★ **682**
82C89	★ **1619**
82C89	★ **1623**
82C89	★ **1631**
82C89	★ **4654**
	1461-75
HA-2400	3307-95
HA-2400	3334-203
HA-2400	3353-27
	¶ 408-4
HA-2404	3307-96
HA-2404	3334-204
HA-2404	3353-28
HA-2405	3307-97
HA-2405	3334-205
HA-2405	3356-55
	¶ 408-4
HA-2406-5	3307-98
HA-2406-5	3334-206
HA-2406-5	3356-56
HA-2420	¶ 405-11
HA-2420-2	★ **3170**
	3404-11
HA-2420-8	★ **3170**
	3404-12
HA-2425	¶ 405-11
HA-2425-5	★ **3170**
	3404-13
HA-2500	3353-26
HA-2502	3356-51
HA-2505	3356-52
HA-2510	3356-41
	¶ 405-4
HA-2512	3357-60
HA-2515	3357-65
HA-2520	3331-52
HA-2520	3356-44
	¶ 405-2
HA-2522	3357-62
HA-2525	3357-67
HA-2530	¶ 408-5
HA-2535	¶ 408-5
HA-2539	3331-22
HA-2539	3334-276
	¶ 408-12
HA-2539-2	3354-39
HA-2539-5	3357-138
HA-2540	3331-27
HA-2540	3334-274
HA-2540-2	3354-38
HA-2540-5	3357-137
HA-2541	¶ 408-14
HA-2541-2	3346-77
HA-2541-5	3346-78
HA-2542	¶ 408-15
HA-2542-2	3357-44
HA-2542-5	3357-45
HA-2600	3346-206
	¶ 405-4
	¶ 407-9
HA-2602	3352-50
HA-2605	3352-51
	¶ 407-9
HA-2620	3334-262
HA-2620	3350-14
	¶ 405-2
	¶ 405-3
	¶ 405-4
HA-2622	3334-263
HA-2622	3352-54
HA-2625	3334-264
HA-2625	3352-55
HA-2630	3306-42
HA-2635	3306-43
HA-2640	3331-80
HA-2640	3350-16
HA-2645	3331-81
HA-2645	3355-3
HA-2650	3363-59
HA-2655	3365-41
HA-2720	3347-13
HA-2720	3334-26
HA-2720	3346-203
HA-2725	3347-14
HA-2725	3334-27
HA-2725	3352-31
HA-2900	¶ 408-6
HA-4156-5	3371-43
HA-4600-2	3370-19
HA-4600-5	3370-20
HA-4602-2	3370-22
HA-4605-5	3370-52
HA-4741-2	3370-47
HA-4741-5	3371-47
HA-4900-2	3315-52
HA-4902-2	3316-12
HA-4905-5	3316-47
HA-4950	¶ 386-17
HA-5002-2	3306-20
HA-5002-5	3306-21
HA-5033	3306-27
HA-5033-2	3307-136
HA-5033-2	3329-42
HA-5033-5	3307-137
HA-5033-5	3329-43
HA-5102-2	3363-26
HA-5102-5	3363-27
HA-5104-2	3370-23
HA-5104-5	3370-24
HA-5112	3334-228
HA-5112-2	3363-28
HA-5112-5	3363-29
HA-5114	3334-229
HA-5114-2	3370-25
HA-5114-5	3370-26
HA-5130-2	3335-42
HA-5130-5	3341-22
HA-5130-5	3335-44
HA-5135-2	3335-43
HA-5135-5	3341-23
HA-5135-5	3335-45
HA-5141	3333-13
HA-5141	3334-91
HA-5141	3355-57
	¶ 407-4
HA-5141A	3333-10
HA-5141A	3355-12
HA-5142	3333-14
HA-5142	3334-105
HA-5142	3367-48
HA-5142A	3333-11
HA-5142A	3366-49
HA-5144	3333-15
HA-5144	3334-141
HA-5144	3335-1
HA-5144A	3333-12
HA-5144A	3372-29
HA-5147-2	3357-178
HA-5147-5	3357-179
HA-5147A-2	3357-164
HA-5147A-5	3357-165
HA-5151-2	3346-121
HA-5151-5	3346-219
HA-5152-2	3363-24
HA-5152-5	3363-65
HA-5154-2	3363-25
HA-5154-5	3363-66
HA-5160	3331-57
HA-5160	3334-257
HA-5160-2	3346-168
HA-5160-5	3346-170
HA-5162	3331-58
HA-5162	3334-258
HA-5162-5	3357-119
HA-5170	¶ 406-10
HA-5170-2	3342-9
HA-5170-5	3342-26
HA-5180	3332-14
HA-5180-2	3346-158
HA-5180-5	3346-159
HA-5180A	3332-15
HA-5180A-2	3340-88
HA-5180A-5	3340-89
HA-5190	3331-50
HA-5190	3354-23
	¶ 406-9
	¶ 410-3
HA-5195	3331-51
HA-5195	3354-31
	¶ 406-9
	¶ 410-3
HA-5320	¶ 407-6
HA-5320-2	3404-14
HA-5320-5	3404-15
HA-5320-8	3404-16
HA-5330-2	★ **3171**
	3404-17
HA-5330-5	★ **3171**
	3404-18
HA-5330-8	★ **3171**
	3404-19
HA-909	¶ 406-11
HA-909	¶ 406-12
HA-911	¶ 406-11
HA-911	¶ 406-12
HA-OP07	3341-24
HA-OP07	3338-35
HA-OP07A	3335-36
HA-OP07C	3338-52
HA-OP07E	3335-37
HA-OP27A	3337-13
HA-OP27B	3338-6
HA-OP27C	3339-24
HA-OP27E	3337-14
HA-OP27F	3338-7
HA-OP27G	3339-20
HA-OP37A	3337-6
HA-OP37B	3338-20
HA-OP37C	3339-29
HA-OP37E	3337-7
HA-OP37F	3338-21
HA-OP37G	3339-30
HC-5502A	¶ 410-13
HC-550X	¶ 413-16
HC5502A	★ **3597**
	3381-59
HC5504	★ **3597**
	3381-60
	¶ 410-13
HC5508	★ **3597**
	3381-61
HC5510	★ **3595**
	3377-142
HC5511	★ **3595**
	3377-46
HC5512	★ **3596**
	3379-63
HC5512A	★ **3596**
	3379-64
HC5512C	★ **3596**
	3379-65
HC5512D	★ **3596**
	3379-66
HC5522	3381-50
HC5525	3381-51
HC55516	¶ 411-20
HC5552	★ **3595**
	3377-119
HC5553	★ **3595**
	3377-120
HC55532	¶ 411-20
HC55536	★ **3597**
	3323-97
	3378-26
HC5554	★ **3595**
	3377-121
HC55564	★ **3597**
	3323-98
	3378-27
HC5557	★ **3595**
	3377-80
HC5560	★ **3596**
	3380-104
HC5572	3380-74
HC5580	3378-24
HC5590	3379-98
HCA Macro	★ **657**
HD0165	¶ 399-18
HD15530	¶ 412-1
HD15530-2	★ **1625**
HD15530-2	★ **1631**
HD15530-2	★ **4029**
HD15530-2	★ **4654**
	837-56
	★ **1625**
	★ **1631**
	★ **4029**
	★ **4654**
	2900-89
HD15530-9	★ **1625**
HD15530-9	★ **1631**
HD15530-9	★ **4029**
HD15530-9	★ **4654**
	837-57
	★ **1625**
	★ **1631**
	★ **4029**
	★ **4654**
	2900-90
HD15531	¶ 400-3
HD15531	¶ 412-1
HD15531-2	★ **1625**
	837-58
	★ **1625**
	2900-91
HD15531-9	★ **1625**
	837-59
	★ **1625**
	2900-92
HD15531B	★ **1625**
	2900-93
HD245	¶ 395-16
HD245	¶ 396-6
HD246	¶ 395-16
HD246	¶ 396-6
HD4702	¶ 413-15
HD4702-2	★ **1624**
	837-54
	★ **1624**
	2900-21
	★ **1624**
	1448-25
HD545	¶ 395-16
HD545	¶ 396-6
HD546	¶ 395-16
HD546	¶ 396-6
HD6402	¶ 396-11
HD6402-2	★ **1624**
	2901-78
	★ **1624**
	1462-110
HD6406	★ **1624**
HD6406	★ **1630**
	2901-74
	★ **1624**
	★ **1630**
	1461-125
HD6408	★ **1624**
	2900-18
HD6408-9	★ **1624**
	837-51
HD6409	★ **1625**
	838-12
	¶ 396-2
HD6409-2	★ **1625**
	2900-87
HD6431-2	819-62
HD6431-2	1462-106
HD6432-2	819-61
HD6432-2	1462-105
HD6433-2	819-63
HD6433-2	1462-109
HD6434-2	1462-107
HD6434-9	1462-108
HD6436-2	1462-121
HD6436-9	1462-122
HD6440-2	820-5
HD6440-2	1462-123
HD6495-2	819-176
HD6495-2	1462-120
HD6640	¶ 354-14
HDXXXXRH	★ **660**
HELP	4477-2
HF10	★ **3596**
	3377-20
	3398-9
HGA-C00600RH	4446-35
HGA-C00600RH	4446-36
HGA-C01200RH	4446-38
HGA-C01200RH	4446-39
HGA-C02500RH	4446-41
HGA-C02500RH	4446-42
HI-200	¶ 401-10
HI-201	¶ 401-10
HI-201HS	¶ 402-14
HI-300	¶ 401-10
HI-300 series	¶ 401-8
HI-506L	¶ 401-2
HI-507L	¶ 401-2
HI-50XX	¶ 402-2
HI-5712	¶ 394-10
HI-5900	¶ 394-10
HI-5900	¶ 401-10
HI-5901	¶ 394-10
HI-5901	¶ 401-10
HI-DAC16	¶ 386-10
HI1080	¶ 388-9
HI1080	¶ 389-10
HI1085	¶ 389-10
HI1818A-2	★ **3188**
	2830-165
HI1818A-5	★ **3188**
	2830-166
HI1818A-8	★ **3188**
	2830-167
HI1828A-2	★ **3188**
	2830-55
HI1828A-5	★ **3188**
	2830-56
HI1828A-8	★ **3188**
	2830-57
HI200-2	2822-60
HI200-5	2822-78
HI201-2	2823-58
HI201-5	2823-77
HI201HS-2	2823-40
HI201HS-5	2823-41
HI300	2822-41
HI301	2824-140
HI302	2826-108
HI303	2825-70
HI304	2822-42
HI305	2824-141
HI306	2826-109
HI307	2825-71
HI381	2822-43
HI384	2826-110
HI387	2824-142
HI390	2825-72
HI5040-2	2822-15
HI5040-5	2822-16
HI5041-2	2822-69
HI5041-5	2822-70
HI5042-2	2825-5
HI5042-5	2825-6
HI5043-2	2825-96
HI5043-5	2825-97
HI5044-2	2826-93
HI5044-5	2826-94
HI5045-2	2827-11
HI5045-5	2827-12
HI5046-2	2827-80
HI5046-5	2827-81
HI5046A-2	2827-77
HI5046A-5	2827-78
HI5047-2	2827-119
HI5047-5	2827-120
HI5047A-2	2827-116
HI5047A-5	2827-117
HI5048-2	2822-53
HI5048-5	2822-54
HI5049-2	2827-3
HI5049-5	2827-4
HI5050-2	2824-152
HI5050-5	2824-153
HI5051-2	2825-84
HI5051-5	2825-85
HI506-2	★ **3172**
	2831-74
HI506-5	★ **3172**
	2831-75
HI506-8	★ **3172**
	2831-76
HI506A-2	★ **3172**
	2831-90
HI506A-5	★ **3172**
	2831-93
HI506A-8	★ **3172**
	2831-94
HI506L-2	★ **3172**
	2831-91
HI506L-5	★ **3172**
	2831-95
HI506L-8	★ **3172**
	2831-96
HI507-2	★ **3172**
	2831-10
HI507-5	★ **3172**
	2831-11
HI507-8	★ **3172**
	2831-12
HI507A-2	★ **3172**
	2831-31
HI507A-5	★ **3172**
	2831-33
HI507A-8	★ **3172**
	2831-34
HI507L-2	★ **3172**
	2831-39
HI507L-5	★ **3172**
	2831-40
HI507L-8	★ **3172**
	2831-41
HI508-2	★ **3175**
	2830-152
HI508-5	★ **3175**
	2830-153
HI508-8	★ **3175**
	2830-154
HI508A-2	★ **3175**
	2830-176
HI508A-5	★ **3175**
	2830-177
HI508A-8	★ **3175**
	2830-178
HI508L-2	★ **3175**
	2831-44
HI508L-5	★ **3175**
	2831-46
HI508L-8	★ **3175**
	2831-47
HI509-2	★ **3175**
	2830-45
HI509-5	★ **3175**
	2830-46
HI509-8	★ **3175**
	2830-47
HI509A-2	★ **3175**
	2830-72
HI509A-5	★ **3175**
	2830-73
HI509L-2	★ **3175**
	2830-80
HI509L-5	★ **3175**
	2830-81
HI516-2	2831-82
HI516-5	2831-83
HI518-2	★ **3178**
	2831-23
HI518-5	★ **3178**
	2831-24
HI524-2	2830-88
HI524-5	2830-89
HI539-2	★ **3179**
	2830-66
HI539-5	★ **3179**
	2830-67
HI546	★ **3180**
HI547	★ **3180**
HI548	★ **3181**
HI549	★ **3181**
HI5608	¶ 389-6
HI5610	¶ 389-6
HI5610-2	★ **3189**
	2856-19
HI5610-5	★ **3189**
	2856-20
HI5610-8	★ **3189**
	2856-21
HI5618A-2	★ **3190**
	2850-39
HI5618A-5	★ **3190**
	2850-40
HI5618B-2	★ **3190**
	2851-44
HI5618B-5	★ **3190**
	2851-45
HI562	¶ 389-6
HI562A-2	★ **3182**
	2861-1

¶ Indicates page number in Application Note Directory.
★ Indicates additional data is provided on the page noted.

Harris Semiconductor (Cont'd)

Device	Page-Line
HI562A-5	★ 3182 2862-51
HI562A-8	★ 3182 2861-2
HI565AJ	★ 3183 2863-4
HI565AK	★ 3183 2861-4
HI565AS	★ 3183 2863-5
HI565AT	★ 3183 2861-5
HI5660-2	2867-41
HI5660-5	2867-42
HI5660A-2	2867-43
HI5660A-S	2867-44
HI5680I-5	★ 3191 2862-13
HI5680V-5	★ 3191 2865-1
HI5685I-4	★ 3191 2862-14
HI5685V-4	★ 3191 2865-2
HI5687I-2	★ 3191 2862-15
HI5687V-2	★ 3191 2865-3
HI5690V-5	★ 3192 2843-13
HI5695V-4	2843-14
HI5697V-2	★ 3192 2843-15
HI5712	¶ 371-7
HI5712	¶ 371-17
HI5721	2842-11
HI574AJ	★ 3184 2844-36
HI574AK	★ 3184 2845-24
HI574AL	★ 3184 2845-25
HI574AS	★ 3184 2844-37
HI574AS-8	★ 3184 2844-38
HI574AT	★ 3184 2845-26
HI574AT-8	★ 3184 2845-27
HI574AU	★ 3184 2845-28
HI574AU-8	★ 3184 2845-29
HI5811	2864-8
HI5900	¶ 371-17
HI5900	¶ 394-15
HI674AJ	★ 3185 2844-28
HI674AK	★ 3185 2845-18
HI674AL	★ 3185 2845-19
HI674AS	★ 3185 2844-29
HI674AS-8	★ 3185 2844-30
HI674AT	★ 3185 2845-20
HI674AT-8	★ 3185 2845-21
HI674AU	★ 3185 2845-22
HI674AU-8	★ 3185 2845-23
HI7541A	★ 3193 2863-37
HI7541B	★ 3193 2861-8
HI7541J	★ 3193 2863-38
HI7541K	★ 3193 2861-9
HI7541S	★ 3193 2863-39
HI7541S-8	★ 3193 2863-40
HI7541T	★ 3193 2861-10
HI7541T-8	★ 3193 2861-11
HI774AJ-5	★ 3186 2844-19
HI774AK-5	★ 3186 2843-27
HI774AL-5	★ 3186 2843-28
HI774AS-2	★ 3186 2844-20
HI774AT-2	★ 3186 2844-21
HI774AU-2	★ 3186 2844-22
HIDAC16B	★ 3194 2871-36
HIDAC16C	★ 3194 2872-3
HIDAC801	2862-31
HI055001-6	3400-93
HM-6516	¶ 437-5
HM5-6564	★ 4027 3843-98 3845-103
HM604	★ 1631
HM6100	1433-30
HM6504-5	★ 682 ★ 1631 ★ 4025 ★ 4029 ★ 4654 3840-75
HM6504-8	★ 682 ★ 1631 ★ 4025 ★ 4029 ★ 4654 3840-76
HM6504-9	★ 682 ★ 1631 ★ 4025 ★ 4029 ★ 4654 3840-77
HM6504B-8	★ 682 ★ 1631 ★ 4025 ★ 4029 ★ 4654 3840-51
HM6504B-9	★ 682 ★ 1631 ★ 4025 ★ 4029 ★ 4654 3840-52
HM6504C-9	★ 682 ★ 1631 ★ 4025 ★ 4029 ★ 4654 3840-78
HM6504S-8	★ 682 ★ 1631 ★ 4025 ★ 4029 ★ 4654 3840-43
HM6504S-9	★ 682 ★ 1631 ★ 4025 ★ 4029 ★ 4654 3840-44
HM6508-5	★ 4024 3835-2
HM6508-8	★ 4024 3834-110
HM6508-9	★ 4024 3834-111
HM6508B-8	★ 4024 3834-106
HM6508B-9	★ 4024 3834-107
HM6514-5	★ 682 ★ 1631 ★ 4025 ★ 4029 ★ 4654 3836-87
HM6514-9	★ 682 ★ 1631 ★ 4025 ★ 4029 ★ 4654 3836-88
HM6514B-8	★ 682 ★ 1631 ★ 4025 ★ 4029 ★ 4654 3836-53
HM6514B-9	★ 682 ★ 1631 ★ 4025 ★ 4029 ★ 4654 3836-54
HM6514C-9	★ 682 ★ 1631 ★ 4025 ★ 4029 ★ 4654 3836-89
HM6514S-8	★ 682 ★ 1631 ★ 4025 ★ 4029 ★ 4654 3836-40
HM6514S-9	★ 682 ★ 1631 ★ 4025 ★ 4029 ★ 4654 3836-41
HM6516-5	★ 682 ★ 1631 ★ 4025 ★ 4029 ★ 4654 3838-106
HM6516-8	★ 682 ★ 1631 ★ 4025 ★ 4029 ★ 4654 3838-107
HM6516-9	★ 682 ★ 1631 ★ 4025 ★ 4029 ★ 4654 3838-108
HM65162-8	★ 682 ★ 1631 ★ 4025 ★ 4029 ★ 4654 3837-100
HM65162-9	★ 682 ★ 1631 ★ 4025 ★ 4029 ★ 4654 3837-101
HM65162B-8	★ 682 ★ 1631 ★ 4025 ★ 4029 ★ 4654 3837-87
HM65162B-9	★ 682 ★ 1631 ★ 4025 ★ 4029 ★ 4654 3837-88
HM65162C-8	★ 682 ★ 1631 ★ 4025 ★ 4029 ★ 4654 3838-24
HM65162C-9	★ 682 ★ 1631 ★ 4025 ★ 4029 ★ 4654 3837-102
HM65162S-9	★ 682 ★ 1631 ★ 4025 ★ 4029 ★ 4654 3837-71
HM6516B-8	★ 682 ★ 1631 ★ 4025 ★ 4029 ★ 4654 3838-25
HM6516B-9	★ 682 ★ 1631 ★ 4025 ★ 4029 ★ 4654 3838-26
HM6518-5	★ 4024 3835-3
HM6518-8	★ 4024 3834-113
HM6518-9	★ 4024 3834-114
HM6518B-8	★ 4024 3834-108
HM6518B-9	★ 4024 3834-109
HM65262B	★ 682 ★ 1631 ★ 4025 ★ 4029 ★ 4654 3844-45
HM6551-5	★ 4024 3833-89
HM6551-8	★ 4024 3833-74
HM6551-9	★ 4024 3833-75
HM6551B-8	★ 4024 3833-62
HM6551B-9	★ 4024 3833-63
HM6561-5	★ 4024 3833-88
HM6561-8	★ 4024 3833-72
HM6561-9	★ 4024 3833-73
HM6561B-8	★ 4024 3833-59
HM6561B-9	★ 4024 3833-60
HM6564-2	3843-99
HM6564-2	3845-101
HM6564-5	3843-101
HM6564-5	3845-104
HM6564-9	3843-100
HM6564-9	3845-102
HM6616	¶ 436-7
HM6616	¶ 436-8
HM6616-9	★ 4028 3819-71
HM6616B-2	★ 4028 3819-68
HM6616B-9	★ 4028 3819-69
HM6641	¶ 436-9
HM6641-8	★ 4028 3816-68
HM6641-9	★ 4028 3816-69
HM7602-2	3814-58
HM7602-5	3814-50
HM7603-2	3814-59
HM7603-5	3814-55
HM7610-2	3814-125
HM7610-5	3814-114
HM7610A-2	3814-119
HM7610A-5	3814-96
HM7610B-2	3814-103
HM7610B-5	3814-86
HM7611-2	3814-126
HM7611-5	3814-117
HM7611A-2	3814-121
HM7611A-5	3814-99
HM7611B-2	3814-106
HM7611B-5	3814-87
HM76161-2	3819-61
HM76161-5	3819-34
HM76161A-5	3819-13
HM76161B-5	3818-94
HM76165-2	3820-25
HM76165-5	3820-21
HM7620-2	3815-69
HM7620-5	3815-62
HM7620A-2	3815-63
HM7620A-5	3815-39
HM7620B-2	3815-46
HM7620B-5	3815-29
HM7621-2	3815-70
HM7621-5	3815-65
HM7621A-2	3815-66
HM7621A-5	3815-42
HM7621B-2	3815-50
HM7621B-5	3815-31
HM76321-2	3820-64
HM76321-5	3820-53
HM7640-2	3816-61
HM7640-5	3816-52
HM7640A-2	3816-26
HM7640A-5	3816-3
HM7641-2	3816-64
HM7641-5	3816-56
HM7641A-2	3816-38
HM7641A-5	3816-14
HM7642-2	3817-22
HM7642-5	3817-23
HM7642A-2	3817-35
HM7642A-5	3817-10
HM7642B-2	3817-17
HM7642B-5	3816-102
HM7643-2	3817-27
HM7643-2	3817-43
HM7643-5	3817-28
HM7643A-2	3817-36
HM7643A-5	3817-11
HM7643B-2	3817-20
HM7643B-5	3817-4
HM7649-2	3816-60
HM7649-5	3816-28
HM7649A-2	3816-39
HM7649A-5	3816-7
HM76641-2	3821-71
HM76641-5	3821-70
HM7681-2	3817-147
HM7681-5	3817-128
HM7681A-5	3817-102
HM7685-2	3818-53
HM7685-5	3818-46
HM7685A-2	3818-38
HM7685A-5	3818-21
HM8808	★ 4026 3843-76
HM8808A	★ 4026 3843-77
HM8808AB	★ 4026 3843-48
HM8808AS	★ 4026 3843-25
HM8808B	★ 4026 3843-49
HM8808S	★ 4026 3843-26
HM8816	3845-116
HM8816H	3845-109
HM8832	3846-57
HM91M2	3847-87
HM91M2	3847-103
HM92560	★ 4027 3846-11 3846-60
HM92560-5	★ 4027 3846-16 3846-69
HM92560-8	★ 4027 3846-12 3846-21 3846-61 3846-74
HM92560-9	★ 4027 3846-13 3846-22 3846-62 3846-75
HM925605	★ 4027
HM92562	3846-6
HM92562	3846-7
HM92562	3846-44
HM92570-5	★ 4027 3846-27 3846-80
HM92570-8	★ 4027 3846-17 3846-23 3846-70 3846-76
HM92570-9	★ 4027 3846-18 3846-24 3846-71 3846-77
HMD11011-2	★ 1068 851-5
HMD11016	★ 1068
HMD11016	★ 1069
HMD11100	★ 4660 4446-43
HMD11101-2	★ 1068
HMD11101-2	★ 1077 851-12
HMD11104-2	★ 1068
HMD11104-2	★ 1077 851-10
HMD11113-2	★ 1068
HMD11113-2	★ 1077 851-13
HMD11131-2	★ 1068
HMD11131-2	★ 1077 851-9
HMD11301-2	★ 1068
HMD11301-2	★ 1077 851-3
HMD11502-2	★ 1068 851-23
HMD11685-2	★ 1068
HMD11685-2	★ 1077 851-22
HMD12141	★ 1068
HMD12141	★ 1073 3855-23
HMD12141-1	★ 1068
HMD12141-1	★ 1073 851-16
HMK11MSI	★ 1068
HMK11SSI	★ 1068
HMK11SSI	★ 1077
HPL16LC8	¶ 445-9
HPL16LC8-2	★ 4652 4473-14
HPL16LC8-5	★ 4652 4471-49
HPL16LC8-9	★ 4652 4473-15
HPL16RC4-2	★ 4652 4473-16
HPL16RC4-9	★ 4652 4473-17
HPL16RC6-2	★ 4652 4473-18
HPL16RC6-9	★ 4652 4473-19
HPL16RC8-2	★ 4652 4473-20
HPL16RC8-9	★ 4652 4473-21
HPL82C339	★ 4655
HS15530RH	★ 676
HS15530RH	★ 682 2900-88 ★ 676 ★ 682 1458-25
HS1840RH	★ 672 2831-97
HS302RH	★ 674 2827-103
HS303RH	★ 674 2827-109
HS306RH	★ 674 2827-104
HS307RH	★ 674 2827-110
HS3182	★ 678 2883-59 2900-9
HS3273	2900-56
HS3282	★ 680 2900-10
HS3374RH	★ 632 837-43
HS3516RH	★ 665 3346-218

Arranged alphanumerically from left to right.

Device **Page-Line**

Harris Semiconductor (Cont'd)

HS3530RH ★ **667**
3346-209
HS3546RH 3346-153
HS3604 3321-50
HS3819 3327-109
HS3819 1466-24
HS384RH ★ **674**
2827-105
HS390RH ★ **674**
2827-111
HS4602RH 3370-21
HS508ARH ★ **670**
2831-45
HS5104RA 3370-51
HS5104RH ★ **669**
HS54C138RH ★ **630**
818-2
HS6504RH ★ **638**
3840-50
HS6508RH ★ **640**
3835-1
HS6514RH ★ **642**
3836-78
HS65262RH ★ **651**
3844-93
HS6551RH ★ **649**
3833-64
HS6564RH ★ **644**
3843-97
HS6641RH ★ **653**
3816-70
HS80C85RH ★ **624**
HS80C85RH ★ **637**
1457-288
HS81C55RH ★ **626**
1459-56
1457-407
HS81C56RH ★ **626**
1459-57
1457-408
HS82C08RH ★ **634**
1457-96
HS82C12RH ★ **635**
1457-173
HS83C55RH ★ **628**
1457-12
1457-423
HSC Cell ★ **4656**
HSCXXXRH 4479-16
HSCXXXXRH ★ **661**
HSDXXXXRH ★ **658**
HSG0600RH ★ **655**
4446-34
HSG1200RH ★ **655**
4446-37
HSG2500RH ★ **655**
4446-40
HV-1000 ¶ 422-9
HV1000 2895-120
HV1000A 2895-121
JAN6504 ★ **1631**
JAN6504 ★ **4029**
JAN6514 ★ **1631**
JAN6514 ★ **4029**
LM10C ¶ 407-4
LM118 3350-23
LM308 3356-5
LM308A 3342-53
LM318 3357-73
LM741 ¶ 407-4
MC80686 ★ **1631**
MD80686 ★ **1631**
MD80C86 ★ **4029**
MP7542S 2867-31
NSC800 ★ **1619**
OP-20 ¶ 407-4
RC4132 ¶ 407-4
RH Gate Array ★ **657**
SAJI-IV 4479-17
SN74XX Cell ★ **4659**
Z80 ★ **1619**

Hewlett-Packard

Design Cap Sys 5052-49
HP64000 1813-17
Logic Des Sta 4918-2

Device **Page-Line**

Personal Logic Des Sta 4918-3

Hi-Level Technology

6801VICE 1813-18
DP9445 1815-1
DS1610 1815-2
DS270 1815-3
DS370 1815-4
DS470 1815-5
DS570 1815-6
★ **1902**

Hitachi America, Ltd.

H4701B 3857-63
HA11219 3322-83
HA11225 3321-150
HA11235 3325-101
HA11247 3324-122
HA1125 3326-33
HA1127 3309-9
HA11423 3326-102
HA11431NT 3324-123
HA11436A 3324-124
HA11440A 3327-6
HA11441 3325-102
HA11461 3325-103
HA11465 3327-99
HA11466 3327-7
HA11466 3327-122
HA11477NT 3327-101
HA11478 3327-110
HA11480 3324-125
HA11485ANT 3326-30
HA11489 3325-69
HA117 3327-117
HA11703 3324-42
HA11720 3320-39
HA11767AMP 3327-119
HA11774MP 3327-118
HA11776AMP 3327-120
HA11777MP 3327-116
HA1196 3322-108
HA1197 3321-25
HA1199 3321-26
HA12002 3316-190
HA12010 2874-27
HA12016 3322-74
HA12017 3319-6
HA12026 3322-75
HA12039 3319-104
HA12043 3316-152
HA12044 3316-153
HA12045 3316-155
HA12046 3316-156
HA12047 3316-157
HA12048 3316-158
HA12051 3324-34
HA12052CFP 3324-38
HA12058MP 3316-159
HA12088NT 3316-160
HA12091MP 3316-161
HA12411 3321-151
HA12412 3319-95
HA12412 3321-152
HA12413 3321-82
HA12427 3321-51
HA12428 3321-52
HA12429 3321-21
HA12432 3321-27
HA12438AFP 3321-121
HA12440 3321-28
HA12441 3379-87
HA12442V 3320-44
HA13001 3318-92
HA13007 2892-16
HA13007 2898-68
HA13406W 2895-88
HA13406W 3327-147
HA13408 2895-40
HA13421A 2895-117
HA13426 3327-151
HA13431 3327-152
HA13432 3327-153
HA1368 3316-191
HA1374 3318-178
HA1377 3318-148
HA1384 3318-93

Device **Page-Line**

HA1388 3318-94
HA1392 3318-95
HA1393 3318-96
HA1394 3318-149
HA1396 3318-97
HA1397 3318-98
HA16605W 3327-127
HA16617 2874-57
HA16619 2874-58
HA16628P 3327-145
HA16629P 3327-146
HA16631 3308-68
HA16631 1467-80
HA16632A 1466-64
HA16636 3399-113
HA16640 1467-87
HA16642 1467-81
HA16643 1466-114
HA16802 3382-21
HA16803 3381-34
HA16804 3382-22
HA16805 3382-23
HA17080 3357-130
HA17082 3368-47
HA17083 3368-48
HA17084 3373-53
HA17301 3334-181
HA17324 3334-147
HA17339 3316-19
HA17358 3334-130
HA17393 3314-34
HA17458 3330-3
HA17524 3395-114
HA17555 3383-35
HA17558 3367-31
HA17715 3334-227
HA17715 3356-32
HA17723 3393-116
HA17733 3307-148
HA17741 3355-28
HA17747 3367-9
HA17805P 3385-1
HA17806P 3385-119
HA17808 3386-40
HA17812P 3387-70
HA17815P 3388-60
HA17818 3388-125
HA17824P 3389-107
HA17902 3334-107
HA19209 2834-48
HA19210 2834-49
HA19216 2833-17
HC16701 2898-159
HD100101 848-106
HD100102 848-103
HD100107 848-115
HD100112 848-89
HD100114 849-70
HD100117 848-109
HD100118 848-112
HD100122 848-69
HD100123 848-92
HD100125 849-44
HD100130 848-118
HD100131 848-95
HD100136 848-77
HD100141 849-39
HD100142 848-123
HD100145 849-6
HD100150 848-120
HD100151 848-98
HD100155 849-30
HD100156 849-36
HD100158 849-37
HD100160 849-67
HD100163 849-24
HD100164 849-33
HD100165 849-61
HD100166 848-65
HD100170 848-82
HD100171 849-27
HD100179 848-60
HD100181 848-63
HD100182 848-67
HD100183 848-62
HD10101 846-93
HD10102 846-60
HD10104 846-5
HD10105 846-84
HD10106 846-52
HD10107 846-139
HD10109 846-75

Device **Page-Line**

HD10110 846-17
HD10111 846-36
HD10116 848-18
HD10117 846-117
HD10118 846-101
HD10119 846-109
HD10121 846-125
HD10124 847-149
HD10125 847-140
HD10130 846-155
HD10131 845-114
HD10132 847-14
HD10133 847-26
HD10134 847-8
HD10136 845-55
HD10145 847-50
HD10145 3831-11
HD10147 847-58
HD10147 3832-26
HD10148 847-55
HD10148 3832-12
HD10160 848-53
HD10161 845-81
HD10162 845-72
HD10164 847-117
HD10174 847-95
HD10175 846-147
HD10179 845-4
HD10180 845-11
HD10181 845-24
HD10209 846-76
HD10210 846-18
HD10211 846-37
HD10230 846-156
HD10231 845-115
HD27K 4447-1
HD27L 4447-4
HD27P 4447-6
HD27Q 4447-9
HD2904 2881-19
HD2905 2885-18
HD2912 2892-136
HD2915 2885-17
HD2916 2892-137
HD2919 2896-43
HD2923 2898-50
HD38510 3320-3
HD38513 3320-4
HD38546 3320-5
HD38550 3320-6
HD38560 3320-7
HD38570 3320-8
HD38580 3320-9
HD38585 3320-10
HD38980 3320-48
HD38991C 3320-49
HD43115 3320-50
HD43890 3320-51
HD44007 3324-65
HD440072 3326-98
HD44007A 3326-99
HD44010 3320-88
HD44231C 3377-61
HD44232C 3377-122
HD44233C 3377-62
HD44234C 3377-123
HD44235C 3377-63
HD44236C 3377-124
HD44237C 3377-64
HD44238C 3377-125
HD44790 1451-55
HD44790 1405-34
HD54HCT240 840-90
HD614042 1451-57
HD614P080C 1405-35
HD614P080S 1405-36
HD61825A 3378-74
HD61825B 3378-75
HD61J 4447-3
HD61K 4447-8
HD61L 4447-11
HD61MM 4447-13
HD6301V 1419-22
HD6303 1454-99
HD6303 1419-23
HD6303R 1454-18
HD6303X 1454-81
HD6305V 1419-24
HD6305Y2 1419-25
HD6309E 1454-74
HD6321 1455-45
HD6321 1469-127

Device **Page-Line**

HD6340 1470-17
HD63463 1466-65
HD63484 ★ **1633**
1465-76
HD6350 1454-126
HD6350 1469-89
HD63701X ★ **1634**
1419-26
HD63705V ★ **1635**
1419-27
HD63A03R 1454-19
HD63A03X 1454-82
HD63A21 1455-46
HD63A21 1469-128
HD63A40 1470-18
HD63A50 1454-127
HD63A50 1469-90
HD63B03R 1454-20
HD63B03X 1454-83
HD63B21 1455-47
HD63B21 1469-129
HD63B50 1454-128
HD63B50 1469-91
HD63P01M1 1419-28
HD63P05Y0 1419-29
HD64180 ★ **1632**
1460-10
HD68000 1463-110
HD68000-10 1463-111
HD68000-10 1437-33
HD68000-12 1463-112
HD68000-12 1437-34
HD68000-4 1463-113
HD68000-6 1463-114
HD68000-6 1437-35
HD68000-8 1463-115
HD68000-8 1437-36
HD68000R-4 1435-17
HD6808 1454-107
HD6809 1454-87
HD6809 1419-30
HD6809E 1419-31
HD6821 1455-48
HD6840 1470-19
HD6843 1455-20
HD6844 1455-7
HD6845 1454-154
HD68450-10 1464-14
HD68450-4 1464-15
HD68450-6 1464-16
HD68450-8 1464-17
HD6850 1454-129
HD6852 1470-53
HD68A00 1454-60
HD68A09 1454-88
HD68A21 1455-49
HD68A40 1470-20
HD68A43 1455-21
HD68A44 1455-8
HD68A45 1454-155
HD68A50 1454-130
HD68A52 1470-54
HD68B00 1454-61
HD68B09 1454-89
HD68B21 1455-50
HD68B40 1470-21
HD68B44 1455-9
HD68B45 1454-156
HD68P01M0 1419-32
HD68P01V07 1419-33
HD68P05V07 1419-34
HD74HC00 825-52
HD74HC01 824-121
HD74HC02 827-121
HD74HC04 811-3
HD74HC08 824-55
HD74HC09 824-105
HD74HC10 824-181
HD74HC107 823-113
HD74HC108 823-100
HD74HC109 822-180
HD74HC11 824-3
HD74HC112 823-74
HD74HC113 823-58
HD74HC114 823-101
HD74HC123 834-67
HD74HC125 808-126
HD74HC126 808-78
HD74HC132 838-144
HD74HC133 825-188
HD74HC137 818-100
HD74HC138 818-9

Device **Page-Line**

HD74HC139 817-103
HD74HC14 839-17
HD74HC147 819-43
HD74HC148 808-61
HD74HC151 833-31
HD74HC152 833-53
HD74HC153 832-19
HD74HC154 819-20
HD74HC155 817-86
HD74HC157 832-62
HD74HC158 832-102
HD74HC160 814-168
HD74HC161 811-178
HD74HC162 814-119
HD74HC163 811-124
HD74HC164 836-38
HD74HC165 835-184
HD74HC166 836-70
HD74HC173 820-137
HD74HC174 821-2
HD74HC175 820-92
HD74HC181 806-158
HD74HC182 806-86
HD74HC190 815-126
HD74HC191 812-47
HD74HC192 815-31
HD74HC193 812-48
HD74HC194 835-29
HD74HC195 835-93
HD74HC20 824-122
HD74HC21 823-163
HD74HC221 834-8
HD74HC237 818-101
HD74HC238 818-10
HD74HC240 839-74
HD74HC241 839-150
HD74HC242 838-83
HD74HC243 838-119
HD74HC244 840-71
HD74HC245 841-120
HD74HC251 833-104
HD74HC253 832-35
HD74HC257 832-36
HD74HC258 832-168
HD74HC259 830-173
HD74HC266 828-94
HD74HC27 827-60
HD74HC273 821-59
HD74HC280 808-36
HD74HC283 806-38
HD74HC292 837-144
HD74HC294 837-145
HD74HC298 833-2
HD74HC299 836-148
HD74HC30 825-149
HD74HC32 826-131
HD74HC323 836-97
HD74HC352 832-30
HD74HC353 832-53
HD74HC354 833-105
HD74HC356 833-106
HD74HC365 809-119
HD74HC366 809-187
HD74HC367 809-120
HD74HC368 809-188
HD74HC373 829-121
HD74HC374 822-60
HD74HC375 829-23
HD74HC377 821-106
HD74HC386 828-27
HD74HC390 815-147
HD74HC393 812-176
HD74HC4017 814-71
HD74HC4020 813-165
HD74HC4022 816-138
HD74HC4024 813-34
HD74HC4040 813-122
HD74HC4051 2830-7
HD74HC4052 2830-8
HD74HC4060 814-12
HD74HC4066 2824-3
HD74HC42 817-9
HD74HC423 834-9
HD74HC442 838-78
HD74HC443 838-79
HD74HC444 838-80
HD74HC4511 819-129
HD74HC4514 818-156
HD74HC4515 819-6
HD74HC4518 815-169
HD74HC4520 812-142
HD74HC4538 834-10

¶ Indicates page number in Application Note Directory.
★ Indicates additional data is provided on the page noted.

Hitachi America, Ltd. (Cont'd)

Device	Page-Line
HD74HC4543	819-84
HD74HC490	815-148
HD74HC51	826-46
HD74HC533	830-46
HD74HC534	821-146
HD74HC540	810-55
HD74HC541	810-56
HD74HC563	830-47
HD74HC564	821-147
HD74HC573	829-122
HD74HC574	822-61
HD74HC589	836-113
HD74HC590	813-105
HD74HC592	813-84
HD74HC593	813-85
HD74HC595	836-98
HD74HC597	836-91
HD74HC620	841-22
HD74HC623	841-121
HD74HC640	841-68
HD74HC643	841-189
HD74HC646	840-154
HD74HC648	840-108
HD74HC651	840-109
HD74HC652	840-155
HD74HC668	815-127
HD74HC669	812-135
HD74HC670	838-2
HD74HC673	836-175
HD74HC674	836-173
HD74HC682	806-129
HD74HC684	806-130
HD74HC686	806-131
HD74HC688	806-107
HD74HC73	823-114
HD74HC74	820-20
HD74HC75	830-139
HD74HC76	822-181
HD74HC77	829-1
HD74HC78	823-102
HD74HC83	806-39
HD74HC85	807-31
HD74HC86	828-28
HD74HC881	806-159
HD74HC91	836-67
HD74HC93	813-2
HD74HC95	835-94
HD74HCT125	808-136
HD74HCT126	808-93
HD74HCT137	818-130
HD74HCT138	818-42
HD74HCT237	818-92
HD74HCT238	818-93
HD74HCT240	839-99
HD74HCT241	839-177
HD74HCT242	838-103
HD74HCT243	838-129
HD74HCT244	839-178
HD74HCT245	841-153
HD74HCT373	829-164
HD74HCT374	822-104
HD74HCT533	830-88
HD74HCT534	821-187
HD74HCT540	810-87
HD74HCT541	810-88
HD74HCT563	830-89
HD74HCT564	821-188
HD74HCT573	829-165
HD74HCT574	822-105
HD74HCT620	841-50
HD74HCT623	841-51
HD74HCT640	841-78
HD74HCT643	842-5
HD74HCT646	840-176
HD74HCT648	840-130
HD74HCT651	840-131
HD74HCT652	840-177
HD74HCT688	806-113
HD74LS00	871-27
HD74LS01	871-171
HD74LS02	874-23
HD74LS03	871-172
HD74LS04	857-116
HD74LS05	857-163
HD74LS08	869-111
HD74LS09	869-149
HD74LS10	870-143
HD74LS107A	867-179
HD74LS109A	867-127
HD74LS11	868-178
HD74LS112	868-94
HD74LS113	868-56
HD74LS114	868-122
HD74LS12	870-175
HD74LS122	880-118
HD74LS123	880-152
HD74LS125A	856-104
HD74LS126A	856-129
HD74LS13	887-114
HD74LS132	888-1
HD74LS136	874-73
HD74LS138	863-117
HD74LS139	863-17
HD74LS14	888-39
HD74LS145	862-107
HD74LS148	888-158
HD74LS15	869-55
HD74LS151A	879-175
HD74LS152	880-21
HD74LS153	877-141
HD74LS154	863-180
HD74LS155	863-81
HD74LS156	863-50
HD74LS157	879-10
HD74LS158	878-95
HD74LS160A	860-163
HD74LS161A	858-154
HD74LS162A	861-13
HD74LS163A	859-9
HD74LS164	882-7
HD74LS164	3856-44
HD74LS165A	882-57
HD74LS165A	3855-124
HD74LS170	877-6
HD74LS174	866-52
HD74LS175	864-284
HD74LS181	855-58
HD74LS190	861-170
HD74LS191	859-178
HD74LS192	861-138
HD74LS193	860-38
HD74LS194A	881-136
HD74LS194A	3854-55
HD74LS195A	881-46
HD74LS195A	3854-86
HD74LS20	870-15
HD74LS21	868-162
HD74LS22	870-91
HD74LS221	880-132
HD74LS240	883-154
HD74LS241	884-37
HD74LS241	2882-3
HD74LS242	883-74
HD74LS242	2888-40
HD74LS243	883-75
HD74LS243	2890-58
HD74LS244	884-87
HD74LS244	2882-4
HD74LS245	885-105
HD74LS247	2875-108
HD74LS248	2875-67
HD74LS249	2875-43
HD74LS251	880-52
HD74LS253	878-47
HD74LS257	879-49
HD74LS258	878-135
HD74LS259	875-141
HD74LS26	871-122
HD74LS266	874-168
HD74LS27	865-55
HD74LS273	866-153
HD74LS279	875-81
HD74LS280	889-24
HD74LS283A	856-42
HD74LS290	860-76
HD74LS293	859-66
HD74LS298	879-104
HD74LS299	882-143
HD74LS30	872-28
HD74LS32	873-54
HD74LS365A	857-12
HD74LS366A	864-7
HD74LS367A	857-13
HD74LS367A	864-127
HD74LS368A	858-23
HD74LS37	871-66
HD74LS373	876-14
HD74LS374	867-13
HD74LS375	875-44
HD74LS38	871-106
HD74LS386	874-119
HD74LS390	861-37
HD74LS393	859-31
HD74LS40	870-59
HD74LS42	862-135
HD74LS47	2875-109
HD74LS48	2875-68
HD74LS49	2875-44
HD74LS490	861-38
HD74LS51	872-93
HD74LS54	872-171
HD74LS55	872-137
HD74LS641	885-48
HD74LS641	2890-48
HD74LS642	884-139
HD74LS642	2890-49
HD74LS645	885-106
HD74LS645	2890-59
HD74LS669	860-53
HD74LS670	877-20
HD74LS670	3830-96
HD74LS73A	868-1
HD74LS74A	864-239
HD74LS75	875-45
HD74LS76A	868-33
HD74LS77	875-63
HD74LS78A	867-143
HD74LS83A	856-43
HD74LS85	854-50
HD74LS86	874-120
HD74LS90	860-77
HD74LS91	882-105
HD74LS92	862-18
HD74LS93	859-67
HD74LS95B	881-77
HG61H04	4447-2
HG61H06	4447-5
HG61H09	4447-7
HG61H15	4447-10
HG61H20	4447-12
HG61H25	4447-14
HITACHI DA SYSTEM	4459-66
HITACHI DA SYSTEM	4459-68
HITACHI DA SYSTEM	4459-71
HM100415	3834-33
HM100422	3832-101
HM100470	3839-78
HM100474	3835-54
HM100474-10	3835-30
HM100480	3844-4
HM10414	3832-46
HM10414-1	3832-43
HM10422	3832-112
HM10422-7	3832-96
HM10470	3839-82
HM10470-1	3839-68
HM10474	3835-41
HM10474-10	3835-28
HM10480	3844-9
HM10480-15	3843-103
HM2112	3834-36
HM2112-1	3834-31
HM2142	3839-61
HM435101-1	3833-107
HM46810	3832-39
HM468A10	3832-34
HM48416A-20	3826-105
HM4847	3840-27
HM4847-2	3839-112
HM4847-3	3840-4
HM4864-1	3827-28
HM4864-2	3827-51
HM4864-3	3827-75
HM4864A-12	3827-29
HM4864A-15	3827-52
HM4864A-20	3827-76
HM50256-12	★ **4034**
	3829-7
HM50256-15	★ **4034**
	3829-41
HM50256-20	★ **4034**
	3829-64
HM50257-12	★ **4034**
	3829-8
HM50257-15	★ **4034**
	3829-42
HM50257-20	★ **4034**
	3829-65
HM50464-12	3827-108
HM50464-15	3827-109
HM50464-20	3828-8
HM50465-12	3827-110
HM50465-15	3827-125
HM50465-20	3828-9
HM511000	★ **4032**
HM51258-12	3828-105
HM51258-15	3829-30
HM51268-10	3828-82
HM561003-12	★ **4039**
	3830-9
HM561003-15	★ **4039**
	3830-17
HM561003-20	★ **4039**
	3830-25
HM6116-2	3838-27
HM6116-3	3838-59
HM6116-4	3838-109
HM6147H	3840-21
HM6147H-35	3839-92
HM6147H-45	3839-108
HM6147H-55	3839-121
HM6148H-35	3835-69
HM6148H-45	3835-89
HM6148H-55	3835-114
HM6167H	3844-63
HM6167H-45	3844-28
HM6167H-55	3844-46
HM6167H-70	3847-41
HM6168H-45	3841-56
HM6168H-55	3841-100
HM6168H-70	3842-39
HM62256-10	★ **4033**
	3846-47
HM62256-12	★ **4033**
	3846-51
HM62256-8	★ **4033**
	3846-42
HM6264-10	3843-18
HM6264A-12	3843-34
HM6264A-15	3843-59
HM6264A-20	3843-84
HM6264AL-12	3843-35
HM6264AL-15	3843-60
HM6264AL-20	3843-85
HM6264L-10	3843-19
HM6267-35	3844-14
HM6267-45	3844-29
HM6287-45	3847-7
HM6287-55	3847-27
HM6287-70	3847-46
HM65256A-12	3846-52
HM65256A-15	3846-58
HM65256A-20	3846-66
HM66202-15	3846-14
HM66202-15	3846-25
HM66202-15	3846-63
HM66202-15	3846-78
HM66202-20	3846-19
HM66202-20	3846-72
HM66202L-15	3846-15
HM66202L-15	3846-26
HM66202L-15	3846-64
HM66202L-15	3846-79
HM66202L-20	3846-20
HM66202L-20	3846-73
HM6787	★ **4035**
	3846-90
HM6788	3837-47
HMCS402AC	1405-37
HMCS402C	1405-38
HMCS402CL	1405-39
HMCS404AC	1405-40
HMCS404C	1451-58
HMCS404C	1405-41
HMCS404CL	1405-42
HMCS412AC	1405-43
HMCS412C	1407-1
HMCS412CL	1407-2
HMCS44C	1407-3
HMCS44CL	1407-4
HMCS45C	1407-5
HMCS45CL	1407-6
HMCS46C	1407-7
HMCS46CL	1407-8
HMCS47C	1407-9
HMCS47CL	1407-10
HMSC42C	1451-56
HN27128A-17	3822-100
HN27128A-20	3823-17
HN27128A-25	3823-41
HN27256-25	3824-48
HN27256-30	3824-71
HN27512-25	★ **4036**
	3824-109
HN27C256	★ **4037**
	3824-3
HN27C256-20	★ **4037**
	3824-14
HN27C256-25	★ **4037**
	3824-36
HN27C256-30	★ **4037**
	3824-62
HN27C64-20	3821-83
HN27C64FP-20	3821-84
HN27C64G-15	3821-72
HN462532	3820-103
HN462716-2	3819-79
HN4827128-25	3823-24
HN4827128-25	3823-30
HN4827128-30	3823-49
HN4827128-30	3823-55
HN4827128-45	3823-68
HN4827128-45	3823-72
HN482764-2	3821-107
HN482764-3	3822-12
HN482764-4	3822-66
HN58064-25	★ **4038**
	3813-37
HN58064-30	★ **4038**
	3813-49
HN58064-35	★ **4038**
	3813-66
HN61256	3853-35
HN61256	3853-39
HN613128	3852-17
HN613128H-20	3851-123
HN613256	3852-118
HN61364	3850-96
HN61365	3850-90
HN61366	3850-91
HN62301	3853-101
HN62301S-25	3853-85
HS74LS640	885-13
HS74LS640	2890-60
LCD-III	1407-11
LCD-IV	1407-12
SAS560	3328-24
SAS570	3328-25
TBA800	3316-192
TBA810	3316-193
TDA2002	3316-194

Holt Inc.

Device	Page-Line
CMOS Chip	★ **4662**
HI-5100	4463-12
HI-8030	2874-92
HI1060	2874-59
HI3700	4463-13
HI7000	3320-133
HI7020	3320-135
HI8000	1468-35
HI8010	2874-93
HI8024	1468-38
HI8030	2876-45
HI8031	2876-98
HI8100	4463-11
HI8200	4463-14
HI8573	3374-15
HI8574	3316-52
HI8575	3315-19
MACROBLOCK	★ **4662**

Honeywell Signal Processing Technologies

Device	Page-Line
HCAL24010	★ **3683**
	3398-95
HDAC34010	★ **3680**
	843-133
	★ **3680**
	2849-4
	★ **3680**
	1466-1
HDAC34020	★ **3681**
	843-134
	★ **3681**
	2849-5
	★ **3681**
	1466-2
HDAC97000	★ **3682**
	844-20
	★ **3682**
	2854-5

Hughes Aircraft, Solid State Products

Device	Page-Line
ALPS	4483-35
DANA	4460-4
DANA	4460-8
DANA	4460-11
DANA	4483-36
GALA	4460-5
GALA	4460-9
GALA	4460-12
Gate Array	★ **683**
H-Series	★ **683**
HCMOS Library	4479-18
HCMP1802A	1451-104
HCMP1802AC	1451-105
HCMP1802BC	1451-106
HCMP1822C	1452-27
HCMP1824	831-129
HCMP1824	3832-4
HCMP1824	1452-18
HCMP1824C	831-130
HCMP1824C	3832-8
HCMP1824C	1452-19
HCMP1831	3849-5
HCMP1831	1452-35
HCMP1831C	3849-11
HCMP1831C	1452-36
HCMP1832	3849-6
HCMP1832	1452-37
HCMP1832C	3849-12
HCMP1832C	1452-38
HCMP1833	3849-20
HCMP1833	1452-47
HCMP1833C	3849-28
HCMP1833C	1452-48
HCMP1834	3849-21
HCMP1834	1452-49
HCMP1834C	3849-29
HCMP1834C	1452-50
HCMP1835	1452-59
HCMP1835C	1452-60
HCMP1852	842-70
HCMP1852	1452-111
HCMP1852C	842-71
HCMP1852C	1452-112
HCMP1853	817-1
HCMP1853	1452-4
HCMP1853C	817-2
HCMP1853C	1452-5
HCMP1854A	1452-67
HCMP1854AC	1452-68
HCMP1855	1451-128
HCMP1855C	1451-129
HCMP1856	1452-83
HCMP1856C	1452-84
HCMP1857	1452-89
HCMP1857C	1452-90
HCMP1858	1452-95
HCMP1858C	1452-96
HCMP1859	1452-101
HCMP1859C	1452-102
HCMP23C64C	3851-15
HCTR0107	890-33
HCTR0200	815-25
HCTR0320	3375-139
HCTR0347	3375-108
HCTR4010	816-11
HCTR6010	816-10
HHGA1072	★ **683**
	4447-24
HHGA2088	★ **683**
	4447-27
HHGA4120	★ **683**
	4447-31
HHGA6152	★ **683**
	4447-34
HHGA8180	★ **683**
	4447-37
HLCD0437	819-110
HLCD0438A	819-115
HLCD0488	819-64
HLCD0488	2874-70
HLCD0515	2874-71
HLCD0538A	819-65
HLCD0538A	2874-72

Arranged alphanumerically from left to right.

Hughes Aircraft, Solid State Products (Cont'd)

Device	Page-Line
HLCD0539A	819-66
HLCD0539A	2874-73
HLCD0540	819-67
HLCD0540	2874-74
HLCD0541	819-68
HLCD0542	819-69
HLCD0548	819-70
HLCD0548	2874-75
HLCD0550	819-71
HLCD0550	2874-76
HLCD0551	819-72
HLCD0551	2874-77
HLCD0607	819-73
HLCD0607	2874-78
HLCD7211-1	2876-49
HLCD7211-2	2876-50
HLCD7211-3	2876-84
HLCD7211-4	2876-85
HLSS0533	837-75
HMMP1802A	1451-107
HMMP1802AC	1451-108
HMMP1802BC	1451-109
HMMP1822C	3833-93
HMMP1822C	1452-28
HMMP1824	831-125
HMMP1824	3832-5
HMMP1824	1452-20
HMMP1824C	831-126
HMMP1824C	3832-9
HMMP1824C	1452-21
HMMP1831	3849-7
HMMP1831	1452-39
HMMP1831C	3849-13
HMMP1831C	1452-40
HMMP1832	3849-8
HMMP1832	1452-41
HMMP1832C	3849-14
HMMP1832C	1452-42
HMMP1833	3849-22
HMMP1833	1452-51
HMMP1833C	3849-30
HMMP1833C	1452-52
HMMP1834	3849-23
HMMP1834	1452-53
HMMP1834C	3849-31
HMMP1834C	1452-54
HMMP1835	1452-61
HMMP1835C	1452-62
HMMP1836	1452-63
HMMP1836C	1452-64
HMMP1851	1452-10
HMMP1851C	1452-11
HMMP1852	842-64
HMMP1852	1452-113
HMMP1852C	842-65
HMMP1852C	1452-114
HMMP1853	816-149
HMMP1853	1452-6
HMMP1853C	816-150
HMMP1853C	1452-7
HMMP1854A	1452-69
HMMP1854AC	1452-70
HMMP1855	1451-130
HMMP1855C	1452-1
HMMP1856	1452-85
HMMP1856C	1452-86
HMMP1857	1452-91
HMMP1857C	1452-92
HMMP1858	1452-97
HMMP1858C	1452-98
HMMP1859	1452-103
HMMP1859C	1452-104
HMMP1861	1452-75
HMMP1861C	1452-76
HNMV3069	3811-44
HNMV3104A	3811-92
HNVM3004	3811-102
HNVM3008	3812-2
HNVM3108A	3812-3
HNVM3300	3811-16
HSGA1101	★ 683 4447-25
HSGA1102	★ 683 4447-28
HSGA1103	★ 683 4447-29
HSGA1105	★ 683 4447-32
HSGA1107	★ 683 4447-35
HSGA1109	★ 683 4447-38
HSGA1115	★ 683 4447-39
HSGA1120	★ 683 4447-40
HSGA1132	★ 683 4447-41
HSGA1140	★ 683 4447-42
HSSR0321	835-9
HSSR0351	835-10
HVGA1072	★ 683 4447-23
HVGA2088	★ 683 4447-26
HVGA4120	★ 683 4447-30
HVGA6152	★ 683 4447-33
HVGA8180	★ 683 4447-36
U-Series	★ 683
V-Series	★ 683

Inmos Corporation

Device	Page-Line
IMS1400-10L	★ 685
IMS1400-10L	★ 4040 3844-91
IMS1400-35	★ 685
IMS1400-35	★ 4040 3844-22
IMS1400-45	★ 685
IMS1400-45	★ 4040 3844-39
IMS1400-55	★ 685
IMS1400-55	★ 4040 3844-56
IMS1400-55M	★ 685
IMS1400-55M	★ 4040 3844-57
IMS1400-70L	★ 685
IMS1400-70L	★ 4040 3844-73
IMS1400-70M	★ 685
IMS1400-70M	★ 4040 3844-74
IMS1400L	★ 685
IMS1400L	★ 4040 3844-75
IMS1403	★ 4042
IMS1420-10L	★ 685
IMS1420-10L	★ 4041 3842-104
IMS1420-45	★ 685
IMS1420-45	★ 4041 3841-93
IMS1420-55	★ 685
IMS1420-55	★ 4041 3842-31
IMS1420-55M	★ 685
IMS1420-55M	★ 4041 3842-32
IMS1420-70L	★ 685
IMS1420-70L	★ 4041 3842-74
IMS1420-70M	★ 685
IMS1420-70M	★ 4041 3842-75
IMS1420L	★ 685
IMS1420L	★ 4041 3842-76
IMS1421-40	3841-50
IMS1421-50	3841-97
IMS1423-25	★ 685
IMS1423-25	★ 4042 3841-10
IMS1423-35	★ 685
IMS1423-35	★ 4042 3841-43
IMS1423-45	★ 685
IMS1423-45	★ 4042 3841-88
IMS1423-45M	★ 685
IMS1423-45M	★ 4042 3841-89
IMS1423-55M	★ 685
IMS1423-55M	★ 4042 3842-26
IMS1600-35	★ 686
IMS1600-35	★ 4043 3846-102
IMS1600-45	★ 686
IMS1600-45	★ 4043 3847-19
IMS1600-55	★ 686
IMS1600-55	★ 4043 3847-38
IMS1600-55M	★ 686
IMS1600-55M	★ 4043 3847-39
IMS1600-70	★ 686
IMS1600-70	★ 4043 3847-51
IMS1600-70M	★ 686
IMS1600-70M	★ 4043 3847-52
IMS1620-45	★ 686
IMS1620-45	★ 4044 3845-26
IMS1620-55	★ 686
IMS1620-55	★ 4044 3845-51
IMS1620-70	★ 686
IMS1620-70	★ 4044 3845-75
IMS1624-45	★ 686
IMS1624-45	★ 4044 3845-27
IMS1624-55	★ 686
IMS1624-55	★ 4044 3845-52
IMS1624-70	★ 686
IMS1624-70	★ 4044 3845-76
IMS2600-10	★ 687 3827-15
IMS2600-12	★ 687 3827-30
IMS2600-15	★ 687 3827-53
IMS2620-10	3826-46
IMS2620-12	3826-52
IMS2620-15	3826-65
IMS2630-12	3826-37
IMS2630-15	3826-38
IMS2630-20	3826-40
IMS2800-10	★ 4045 3828-85
IMS2800-12	★ 4045 3829-1
IMS2800-15	★ 4045 3829-34
IMS2800-60	★ 4045 3828-74
IMS2800-80	★ 4045 3828-76
IMS2801-10	★ 4045 3828-86
IMS2801-12	★ 4045 3829-2
IMS2801-15	★ 4045 3829-35
IMS2801-60	★ 4045 3828-75
IMS2801-80	★ 4045 3828-77
IMSC001	★ 1637 1465-21
IMSC002	★ 1637 1464-73 1465-20
IMSD100	★ 1903 1815-8
IMSD600	★ 1903 1815-9
IMSD700	★ 1903
IMSG170-20	★ 3195 843-148 ★ 3195 2850-6 ★ 3195 1465-61
IMSG170-35	★ 3195 843-149 ★ 3195 2850-7 ★ 3195 1465-62
IMSG170-50	★ 3195 843-150 ★ 3195 2850-8 ★ 3195 1465-63
IMST202	1435-18
IMST222	1435-19
IMST404	1439-9
IMST414	★ 1636 1439-10
Occam	1461-57
Occam	1464-47
Occam	1464-74
T212	1464-72
T414	1465-19
Transputer	844-58
Transputer	1465-22

Integrated Circuits Inc.

Device	Page-Line
CMOS256-03	★ 3598
CMOS256-03	★ 4031 3846-68
CMOS256-03M	★ 3598
CMOS256-03M	★ 4031 3846-65
CMOS32X8-01	★ 3598
CMOS32X8-01	★ 4031 3846-59

Integrated Device Technology

Device	Page-Line
54AHCT245	841-122
74HC138	818-3
74HC139	817-96
74HC240	839-68
74HC244	839-143
74HC245	841-111
74HC273	821-53
74HC373	829-113
74HC374	822-52
74HC377	821-100
74HC533	830-39
74HC534	821-139
74HC640	841-31
74HC645	841-112
IDT39C01C	★ 1639 1448-56
IDT39C02A	★ 1641 1448-116
IDT39C03A	1448-57
IDT39C10B	★ 1640 1462-95
IDT39C203	1448-58
IDT39C60A	1462-124
IDT49C401	1462-128
IDT49C402	★ 1644 1462-127
IDT49C410	★ 1642 1462-126
IDT54AHCT138	818-1
IDT54AHCT139	817-104
IDT54AHCT182	806-81
IDT54AHCT240	839-75
IDT54AHCT244	839-151
IDT54AHCT245	841-108
IDT54AHCT273	821-60
IDT54AHCT299	836-149
IDT54AHCT373	829-123
IDT54AHCT374	822-62
IDT54AHCT377	821-107
IDT54AHCT533	830-48
IDT54AHCT534	821-148
IDT54AHCT640	841-34
IDT54AHCT645	841-123
IDT54FCT138	818-4
IDT54FCT139	817-97
IDT54FCT182	806-83
IDT54FCT240	839-69
IDT54FCT244	839-144
IDT54FCT245	841-113
IDT54FCT273	821-54
IDT54FCT299	836-144
IDT54FCT373	829-114
IDT54FCT374	822-53
IDT54FCT377	821-101
IDT54FCT521	821-102
IDT54FCT533	830-40
IDT54FCT534	821-140
IDT54FCT640	841-32
IDT54FCT645	841-114
IDT6116L-120	★ 4059 3838-30
IDT6116L-120B	★ 4059 3838-31
IDT6116L-150	★ 4059 3838-60
IDT6116L-150B	★ 4059 3838-61
IDT6116L-50	★ 4059 3837-65
IDT6116L-55	★ 4059 3837-73
IDT6116L-55B	★ 4059 3837-74
IDT6116L-65	★ 4059 3837-85
IDT6116L-70	★ 4059 3837-90
IDT6116L-70B	★ 4059 3837-91
IDT6116L-90	★ 4059 3837-105
IDT6116L-90B	★ 4059 3837-106
IDT6116S-120	★ 4059 3838-32 3838-33
IDT6116S-120B	★ 4059 3838-34
IDT6116S-150	★ 4059 3838-62
IDT6116S-150B	★ 4059 3838-63
IDT6116S-50	★ 4059 3837-66
IDT6116S-55	★ 4059 3837-75
IDT6116S-55B	★ 4059 3837-76
IDT6116S-65	★ 4059 3837-86
IDT6116S-70	★ 4059 3837-92
IDT6116S-70B	★ 4059 3837-93
IDT6116S-90	★ 4059 3837-107
IDT6116S-90B	★ 4059 3837-108
IDT6167L-100	★ 4056 3844-87
IDT6167L-100B	★ 4056 3844-88
IDT6167L-45	★ 4056 3844-30
IDT6167L-55	★ 4056 3844-47
IDT6167L-55B	★ 4056 3844-48
IDT6167L-70	★ 4056 3844-64
IDT6167L-70B	★ 4056 3844-65
IDT6167L-85	★ 4056 3844-82
IDT6167L-85B	★ 4056 3844-83
IDT6167LA-25	★ 4056 3843-109
IDT6167LA-35B	★ 4056 3844-15
IDT6167LA-45B	★ 4056 3844-31
IDT6167S-100	★ 4056 3844-89
IDT6167S-100B	★ 4056 3844-90
IDT6167S-45	★ 4056 3844-32
IDT6167S-55	★ 4056 3844-49
IDT6167S-55B	★ 4056 3844-50
IDT6167S-70	★ 4056 3844-66
IDT6167S-70B	★ 4056 3844-67
IDT6167S-85	★ 4056 3844-84
IDT6167S-85B	★ 4056 3844-85
IDT6167SA-25	★ 4056 3843-110
IDT6167SA-35B	★ 4056 3844-16
IDT6167SA-45B	★ 4056 3844-33
IDT6168	¶ 438-9
IDT6168L-100	★ 4057 3842-92
IDT6168L-100B	★ 4057 3842-93
IDT6168L-45	★ 4057 3841-57
IDT6168L-55	★ 4057 3841-101
IDT6168L-55B	★ 4057 3841-102
IDT6168L-70	★ 4057 3842-40
IDT6168L-70B	★ 4057 3842-41
IDT6168L-85	★ 4057 3842-79
IDT6168L-85B	★ 4057 3842-80
IDT6168LA-25	★ 4057 3840-123
IDT6168LA-35	★ 4057 3841-19
IDT6168LA-35B	★ 4057 3841-20
IDT6168LA-45B	★ 4057 3841-58
IDT6168LA-55	★ 4057 3841-103
IDT6168LA-55B	★ 4057 3841-104
IDT6168LA-70	★ 4057 3842-42
IDT6168LA-70B	★ 4057 3842-43
IDT6168S-100	★ 4057 3842-94
IDT6168S-100B	★ 4057 3842-95
IDT6168S-45	★ 4057 3841-59
IDT6168S-55	★ 4057 3841-105
IDT6168S-55B	★ 4057 3842-1
IDT6168S-70	★ 4057 3842-44
IDT6168S-70B	★ 4057 3842-45
IDT6168S-85	★ 4057 3842-81
IDT6168S-85B	★ 4057 3842-82
IDT6168SA-25	★ 4057 3841-1
IDT6168SA-35	★ 4057 3841-21
IDT6168SA-35B	★ 4057 3841-22
IDT6168SA-45	★ 4057 3841-60
IDT6168SA-45B	★ 4057 3841-61
IDT6168SA-55	★ 4057 3842-2
IDT6168SA-55B	★ 4057 3842-3
IDT6168SA-70	★ 4057 3842-46
IDT6168SA-70B	★ 4057 3842-47
IDT616LA-45	3841-62
IDT7130	¶ 439-8
IDT7130L-100	★ 4048 3837-17
IDT7130L-100B	★ 4048 3837-18
IDT7130L-120	★ 4048 3837-29
IDT7130L-120B	★ 4048 3837-30
IDT7130L-90	★ 4048 3837-15

¶ Indicates page number in Application Note Directory.
★ Indicates additional data is provided on the page noted.

Integrated Device Technology (Cont'd)

Device	Page-Line
IDT7130S-100	★ 4048 3837-19
IDT7130S-100B	★ 4048 3837-20
IDT7130S-120	★ 4048 3837-31
IDT7130S-120B	★ 4048 3837-32
IDT7130S-90	★ 4048 3837-16
IDT7132	¶ 439-8
IDT7132L-100	★ 4049 3838-14
IDT7132L-100B	★ 4049 3838-15
IDT7132L-120	★ 4049 3838-49
IDT7132L-120B	★ 4049 3838-50
IDT7132L-90	★ 4049 3837-114
IDT7132S-100	★ 4049 3838-16
IDT7132S-100B	★ 4049 3838-17
IDT7132S-120	★ 4049 3838-51
IDT7132S-120B	★ 4049 3838-52
IDT7132S-90	★ 4049 3837-115
IDT7140	★ 4048
IDT7142	★ 4049
IDT7164	★ 4055
IDT71681	¶ 438-9
IDT71681L-100	★ 4057 3842-96
IDT71681L-100B	★ 4057 3842-97
IDT71681L-45	★ 4057 3841-76
IDT71681L-55	★ 4057 3842-10
IDT71681L-55B	★ 4057 3842-11
IDT71681L-70	★ 4057 3842-52
IDT71681L-70B	★ 4057 3842-53
IDT71681L-85	★ 4057 3842-83
IDT71681L-85B	★ 4057 3842-84
IDT71681LA-25	★ 4057 3841-6
IDT71681LA-35	★ 4057 3841-35
IDT71681LA-35B	★ 4057 3841-36
IDT71681LA-45	★ 4057 3841-77
IDT71681LA-45B	★ 4057 3841-78
IDT71681LA-55	★ 4057 3842-12
IDT71681LA-55B	★ 4057 3842-13
IDT71681LA-70	★ 4057 3842-54
IDT71681LA-70B	★ 4057 3842-55
IDT71681S-100	★ 4057 3842-98
IDT71681S-100B	★ 4057 3842-99
IDT71681S-45	★ 4057 3841-79
IDT71681S-55	★ 4057 3842-14
IDT71681S-55B	★ 4057 3842-15
IDT71681S-70	★ 4057 3842-56
IDT71681S-70B	★ 4057 3842-57
IDT71681S-85	★ 4057 3842-85
IDT71681S-85B	★ 4057 3842-86
IDT71681SA-25	★ 4057 3841-7
IDT71681SA-35	★ 4057 3841-37
IDT71681SA-35B	★ 4057 3841-38
IDT71681SA-45	★ 4057 3841-80
IDT71681SA-45B	★ 4057 3841-81
IDT71681SA-55	★ 4057 3842-16
IDT71681SA-55B	★ 4057 3842-17
IDT71681SA-70	★ 4057 3842-58
IDT71681SA-70B	★ 4057 3842-59
IDT71682L-100	★ 4057 3842-100
IDT71682L-100B	★ 4057 3842-101
IDT71682L-45	★ 4057 3841-82
IDT71682L-55	★ 4057 3842-18
IDT71682L-55B	★ 4057 3842-19
IDT71682L-70	★ 4057 3842-60
IDT71682L-70B	★ 4057 3842-61
IDT71682L-85	★ 4057 3842-87
IDT71682L-85B	★ 4057 3842-88
IDT71682LA-25	★ 4057 3841-8
IDT71682LA-35	★ 4057 3841-39
IDT71682LA-35B	★ 4057 3841-40
IDT71682LA-45	★ 4057 3841-83
IDT71682LA-45B	★ 4057 3841-84
IDT71682LA-55	★ 4057 3842-20
IDT71682LA-55B	★ 4057 3842-21
IDT71682LA-70	★ 4057 3842-62
IDT71682LA-70B	★ 4057 3842-63
IDT71682S-100	★ 4057 3842-102
IDT71682S-100B	★ 4057 3842-103
IDT71682S-45	★ 4057 3841-85
IDT71682S-55	★ 4057 3842-22
IDT71682S-55B	★ 4057 3842-23
IDT71682S-70	★ 4057 3842-64
IDT71682S-70B	★ 4057 3842-65
IDT71682S-85	★ 4057 3842-89
IDT71682S-85B	★ 4057 3842-90
IDT71682SA-25	★ 4057 3841-9
IDT71682SA-35	★ 4057 3841-41
IDT71682SA-35B	★ 4057 3841-42
IDT71682SA-45	★ 4057 3841-86
IDT71682SA-45B	★ 4057 3841-87
IDT71682SA-55	★ 4057 3842-24
IDT71682SA-55B	★ 4057 3842-25
IDT71682SA-70	★ 4057 3842-66
IDT71682SA-70B	★ 4057 3842-67
IDT7187L-35	★ 4051 3846-94
IDT7187L-45	★ 4051 3847-8
IDT7187L-45B	★ 4051 3847-9
IDT7187L-55	★ 4051 3847-28
IDT7187L-55B	★ 4051 3847-29
IDT7187L-70	★ 4051 3847-47
IDT7187L-70B	★ 4051 3847-48
IDT7187L-85	★ 4051 3847-55
IDT7187L-85B	★ 4051 3847-56
IDT7187S-35	★ 4051 3846-95
IDT7187S-45	★ 4051 3847-10
IDT7187S-45B	★ 4051 3847-11
IDT7187S-55	★ 4051 3847-30
IDT7187S-55B	★ 4051 3847-31
IDT7187S-70	★ 4051 3847-49
IDT7187S-70B	★ 4051 3847-50
IDT7187S-85	★ 4051 3847-12
IDT7187S-85B	★ 4051 3847-57
IDT7188L-45	★ 4052 3844-122
IDT7188L-45B	★ 4052 3844-123
IDT7188L-55	★ 4052 3845-28
IDT7188L-55B	★ 4052 3845-29
IDT7188L-70	★ 4052 3845-58
IDT7188L-70B	★ 4052 3845-59
IDT7188L-85	★ 4052 3845-77
IDT7188L-85B	★ 4052 3845-78
IDT7188S-45	★ 4052 3844-124
IDT7188S-45B	★ 4052 3844-125
IDT7188S-55	★ 4052 3845-30
IDT7188S-55B	★ 4052 3845-31
IDT7188S-70	★ 4052 3845-60
IDT7188S-70B	★ 4052 3845-61
IDT7188S-85	★ 4052 3845-79
IDT7188S-85B	★ 4052 3845-80
IDT71981L-45	★ 4054 3845-14
IDT71981L-45B	★ 4054 3845-15
IDT71981L-55	★ 4054 3845-39
IDT71981L-55B	★ 4054 3845-40
IDT71981L-70	★ 4054 3845-63
IDT71981L-70B	★ 4054 3845-64
IDT71981L-85	★ 4054 3845-81
IDT71981L-85B	★ 4054 3845-82
IDT71981S-45	★ 4054 3845-16
IDT71981S-45B	★ 4054 3845-17
IDT71981S-55	★ 4054 3845-41
IDT71981S-55B	★ 4054 3845-42
IDT71981S-70	★ 4054 3845-65
IDT71981S-70B	★ 4054 3845-66
IDT71981S-85	★ 4054 3845-83
IDT71981S-85B	★ 4054 3845-84
IDT71982L-45	★ 4054 3845-18
IDT71982L-45B	★ 4054 3845-19
IDT71982L-55	★ 4054 3845-43
IDT71982L-55B	★ 4054 3845-44
IDT71982L-70	★ 4054 3845-67
IDT71982L-70B	★ 4054 3845-68
IDT71982L-85	★ 4054 3845-85
IDT71982L-85B	★ 4054 3845-86
IDT71982S-45	★ 4054 3845-20
IDT71982S-45B	★ 4054 3845-21
IDT71982S-55	★ 4054 3845-45
IDT71982S-55B	★ 4054 3845-46
IDT71982S-70	★ 4054 3845-69
IDT71982S-70B	★ 4054 3845-70
IDT71982S-85	★ 4054 3845-87
IDT71982S-85B	★ 4054 3845-88
IDT7198L-45	★ 4053 3845-22
IDT7198L-45B	★ 4053 3845-23
IDT7198L-55	★ 4053 3845-47
IDT7198L-55B	★ 4053 3845-48
IDT7198L-70	★ 4053 3845-71
IDT7198L-70B	★ 4053 3845-72
IDT7198L-85	★ 4053 3845-89
IDT7198L-85B	★ 4053 3845-90
IDT7198S-45	★ 4053 3845-24
IDT7198S-45B	★ 4053 3845-25
IDT7198S-55	★ 4053 3845-49
IDT7198S-55B	★ 4053 3845-50
IDT7198S-70	★ 4053 3845-73
IDT7198S-70B	★ 4053 3845-74
IDT7198S-85	★ 4053 3845-91
IDT7198S-85B	★ 4053 3845-92
IDT7201	¶ 435-7
IDT7201-120	★ 1082 3810-1
IDT7201-125B	★ 1082 3810-6
IDT7201-50	★ 1082 3810-24
IDT7201-50B	★ 1082 3810-19
IDT7201-80	★ 1082 3810-14
IDT7201-80B	★ 1082 3810-9
IDT7201L-120	★ 1082 3810-2
IDT7201L-120B	★ 1082 3810-3
IDT7201L-50	★ 1082 3810-20
IDT7201L-50B	★ 1082 3810-21
IDT7201L-65	★ 1082 3810-15
IDT7201L-65B	★ 1082 3810-16
IDT7201L-80	★ 1082 3810-10
IDT7201L-80B	★ 1082 3810-11
IDT7201S-120	★ 1082 3810-4
IDT7201S-120B	★ 1082 3810-5
IDT7201S-50	★ 1082 3810-22
IDT7201S-50B	★ 1082 3810-23
IDT7201S-65	★ 1082 3810-17
IDT7201S-65B	★ 1082 3810-18
IDT7201S-80	★ 1082 3810-12
IDT7201S-80B	★ 1082 3810-13
IDT7202	¶ 435-7
IDT7202-120	★ 1082 3810-29
IDT7202-125B	★ 1082 3810-30
IDT7202-50	★ 1082 3810-45
IDT7202-55B	★ 1082 3810-46
IDT7202-80	★ 1082 3810-35
IDT7202-85B	★ 1082 3810-36
IDT7202L-120	★ 1082 3810-25
IDT7202L-120B	★ 1082 3810-26
IDT7202L-50	★ 1082 3810-41
IDT7202L-50B	★ 1082 3810-42
IDT7202L-65	★ 1082 3810-37
IDT7202L-65B	★ 1082 3810-38
IDT7202L-80	★ 1082 3810-31
IDT7202L-80B	★ 1082 3810-32
IDT7202S-120	★ 1082 3810-27
IDT7202S-120B	★ 1082 3810-28
IDT7202S-50	★ 1082 3810-43
IDT7202S-50B	★ 1082 3810-44
IDT7202S-65	★ 1082 3810-39
IDT7202S-65B	★ 1082 3810-40
IDT7202S-80	★ 1082 3810-33
IDT7202S-80B	★ 1082 3810-34
IDT7209	★ 1085
IDT7209	★ 1088 843-87
IDT7209L	★ 1085
IDT7209L	★ 1088 807-75
IDT7209LB	★ 1085
IDT7209LB	★ 1088 807-76
IDT7210	★ 1084
IDT7210	★ 1088 843-94
IDT7210L	★ 1084
IDT7210L	★ 1088 808-11
IDT7210LB	★ 1084
IDT7210LB	★ 1088 808-12
IDT7212	★ 1087
IDT7212	★ 1088 843-52
IDT7212L	★ 1087
IDT7212L	★ 1088 807-116
IDT7212LB	★ 1087
IDT7212LB	★ 1088 807-117
IDT7213	★ 1087
IDT7213	★ 1088 843-53
IDT7213L	★ 1087
IDT7213L	★ 1088 807-118
IDT7213LB	★ 1087
IDT7213LB	★ 1088 807-119
IDT7216	★ 1086
IDT7216	★ 1088 843-66
IDT7216L	★ 1086
IDT7216L	★ 1088 807-139
IDT7216LB	★ 1086
IDT7216LB	★ 1088 807-140
IDT7217	★ 1086
IDT7217	★ 1088 843-67
IDT7217L	★ 1086
IDT7217L	★ 1088 807-141
IDT7217LB	★ 1086
IDT7217LB	★ 1088 807-142
IDT7243	★ 1084
IDT7243	★ 1088 843-95
IDT7243L	★ 1084
IDT7243L	★ 1088 808-13
IDT7243LB	★ 1084
IDT7243LB	★ 1088 807-79
IDT74AHCT138	818-11
IDT74AHCT139	817-92
IDT74AHCT182	806-82
IDT74AHCT240	839-76
IDT74AHCT244	839-145
IDT74AHCT245	841-124
IDT74AHCT273	821-61
IDT74AHCT299	836-150
IDT74AHCT373	829-124
IDT74AHCT374	822-63
IDT74AHCT377	821-108
IDT74AHCT533	830-49
IDT74AHCT534	821-149
IDT74AHCT640	841-35
IDT74AHCT645	841-125
IDT74FCT139	817-98
IDT74FCT182	806-84
IDT74FCT240	839-70
IDT74FCT244	839-146
IDT74FCT245	841-115
IDT74FCT273	821-55
IDT74FCT299	836-145
IDT74FCT373	829-115
IDT74FCT374	822-54
IDT74FCT377	821-103
IDT74FCT521	821-104
IDT74FCT533	830-41
IDT74FCT534	821-141
IDT74FCT640	841-33
IDT74FCT645	841-116
IDT74HCT138	818-5
IDT74HCT139	817-99
IDT74HCT182	806-85
IDT7M134L-115	★ 4050 3843-31
IDT7M134L-125B	★ 4050 3843-56
IDT7M135L-115	★ 4050 3845-113
IDT7M135L-125B	★ 4050 3845-115
IDT7M164L-100	★ 4066 3847-60
IDT7M164L-100B	★ 4066 3847-61
IDT7M164L-60	★ 4066 3847-40
IDT7M164L-70	★ 4066 3847-53

Arranged alphanumerically from left to right.

Integrated Device Technology (Cont'd)

Device	Page-Line
IDT7M164L-70B	★ 4066 3847-54
IDT7M164L-85	★ 4066 3847-58
IDT7M164L-85B	★ 4066 3847-59
IDT7M203S-100	★ 1083 3810-49
IDT7M203S-100B	★ 1083 3810-50
IDT7M203S-140	★ 1083 3810-47
IDT7M203S-140B	★ 1083 3810-48
IDT7M203S-65	★ 1083 3810-51
IDT7M203S-65B	★ 1083 3810-52
IDT7M204S-100	★ 1083 3810-55
IDT7M204S-100B	★ 1083 3810-56
IDT7M204S-140	★ 1083 3810-53
IDT7M204S-140B	★ 1083 3810-54
IDT7M204S-65	★ 1083 3810-57
IDT7M204S-65B	★ 1083 3810-58
IDT7M464S-100B	★ 4065 3845-96
IDT7M464S-55	★ 4065 3845-53
IDT7M464S-65B	★ 4065 3845-55
IDT7M464S-85B	★ 4065 3845-93
IDT7M624L-60	★ 4060 3847-83 3847-98 3848-11
IDT7M624L-70B	★ 4060 3847-85 3847-100 3848-13
IDT7M624S-65	★ 4060 3847-84 3847-99 3848-12
IDT7M624S-85B	★ 4060 3847-86 3847-101 3848-14
IDT7M656L-100B	★ 4063 3846-8
IDT7M656L-55	★ 4063 3846-1
IDT7M656L-65	★ 4063 3846-2
IDT7M656L-65B	★ 4063 3846-3
IDT7M656L-85	★ 4063 3846-4
IDT7M656L-85B	★ 4063 3846-5
IDT7M812L-60	★ 4061 3847-75
IDT7M812L-70B	★ 4061 3847-76
IDT7M856S-100B	★ 4062 3846-48
IDT7M856S-60	★ 4062 3846-39
IDT7M856S-70	★ 4062 3846-40
IDT7M856S-75B	★ 4062 3846-41
IDT7M856S-85	★ 4062 3846-43
IDT7M856S-90B	★ 4062 3846-45
IDT7M864L-120	★ 4064 3843-50
IDT7M864L-120B	★ 4064 3843-51
IDT7M864L-150	★ 4064 3843-78
IDT7M864L-150B	★ 4064 3843-79
IDT7M864L-200	★ 4064 3843-95
IDT7M864L-200B	★ 4064 3843-96
IDT7M864L-65	★ 4064 3842-135
IDT7M864L-75	★ 4064 3843-6
IDT7M864L-75B	★ 4064 3843-7
IDT7M864L-85	★ 4064 3843-10
IDT7M864L-85B	★ 4064 3843-12
IDT7M912L-60	★ 4067 3847-78
IDT7M912L-70B	★ 4067 3847-79
IDT8M464S-100B	★ 4065 3845-97
IDT8M464S-55	★ 4065 3845-54
IDT8M464S-65	★ 4065 3845-56
IDT8M464S-65B	★ 4065 3845-57
IDT8M464S-85	★ 4065 3845-94
IDT8M464S-85B	★ 4065 3845-95
IDT8M864-120	★ 4064 3843-36
IDT8M864-120B	★ 4064 3843-52
IDT8M864-150	★ 4064 3843-61
IDT8M864-150B	★ 4064 3843-62
IDT8M864-200	★ 4064 3843-86
IDT8M864-200B	★ 4064 3843-87
IDT8M864-85	★ 4064 3843-11
IDT8M864L-65	★ 4064 3842-136
IDT8M864L-75	★ 4064 3843-8
IDT8M864L-75B	★ 4064 3843-9
IDT8M864L-85B	★ 4064 3843-13

Integrated Logic Systems

Device	Page-Line
CA-2009	★ 4664 4448-2
CA-2015	★ 4664 4448-4
CA-2020	★ 4664 4448-7
CA-2029	★ 4664 4448-10
CA-2042	★ 4664 4448-13
CA-2054	★ 4664 4448-17
CA-2066	★ 4664 4448-20
CA-2081	★ 4664 4448-23
CA-2092	★ 4664 4448-25
CA-2104	★ 4664 4448-27
CA2011	4448-3
CA2017	4448-6
CA2022	4448-8
CA2031	4448-11
CA2044	4448-15
CA2057	4448-18
CA2070	4448-21
CA2085	4448-24
CA2096	4448-26
CA2110	4448-28
CA2130	4448-29
CA2150	4448-30
CB-3008	★ 4664 4448-1
CB-3017	★ 4664 4448-5
CB-3023	★ 4664 4448-9
CB-3031	4448-12
CB-3041	4448-14
CB-3051	★ 4664 4448-16
CB-3063	4448-19
CB-307	★ 4664 4448-22
CB3031	★ 4664
CB3041	★ 4664
CB3063	★ 4664
STD CELL	4487-18

Integrated Power Semiconductors

Device	Page-Line
IP109	3384-85
IP109A	3384-86
IP117	★ 3599 3393-80
IP117A	★ 3599 3393-81
IP117AHV	★ 3599 3394-33
IP117HV	★ 3599 3394-34
IP120-12	★ 3599 3391-39
IP120-15	★ 3599 3391-105
IP120-5	★ 3599 3390-32
IP120A-12	★ 3599 3391-40
IP120A-15	★ 3599 3391-106
IP120A-5	★ 3599 3390-33
IP123	★ 3599 3385-12
IP123-12	★ 3599 3387-77
IP123-15	★ 3599 3388-68
IP123A	★ 3599 3385-13
IP123A-12	★ 3599 3387-78
IP123A-15	★ 3599 3388-69
IP137	★ 3599 3394-65
IP137A	★ 3599 3394-66
IP137AHV	★ 3599 3395-16
IP137HV	★ 3599 3395-17
IP138	★ 3599 3393-42
IP138A	★ 3599 3393-43
IP140-12	★ 3599 3387-27
IP140-15	★ 3599 3388-27
IP140-5	★ 3599 3384-87
IP140A-12	★ 3599 3387-28
IP140A-15	★ 3599 3388-28
IP140A-5	★ 3599 3384-88
IP150	★ 3599 3393-14
IP150A	★ 3599 3393-15
IP1524	★ 3599 3395-115
IP1524B	★ 3599 3395-116
IP1525A	★ 3599 3395-117
IP1526	★ 3599 3395-118
IP1526A	★ 3599 3395-119
IP1527	★ 3599
IP1842	★ 3599 3395-120
IP1843	★ 3599 3395-121
IP2064	★ 3599 2897-152
IP2065	★ 3599 2897-153
IP2066	★ 3599 2897-154
IP2067	★ 3599 2897-155
IP2068	★ 3599 2897-156
IP2069	★ 3599
IP2070	★ 3599 2897-157
IP2071	★ 3599 2897-158
IP2074	★ 3599 2897-159
IP2075	★ 3599 2897-160
IP2076	★ 3599 2897-161
IP2077	★ 3599 2897-162
IP209	2897-163
IP209	3384-89
IP209A	3384-90
IP217	★ 3599 3393-82
IP217A	★ 3599 3393-83
IP217AHV	★ 3599 3394-35
IP217HV	★ 3599 3394-36
IP220-12	★ 3599 3391-41
IP220-15	★ 3599 3391-107
IP220-5	★ 3599 3390-34
IP220A-12	★ 3599 3391-42
IP220A-15	★ 3599 3391-108
IP220A-5	★ 3599 3390-35
IP223	★ 3599 3385-14
IP223-12	★ 3599 3387-79
IP223-15	★ 3599 3388-70
IP223A	★ 3599 3385-15
IP223A-12	★ 3599 3387-80
IP223A-15	★ 3599 3388-71
IP237	★ 3599 3394-67
IP237A	★ 3599 3394-68
IP237AHV	★ 3599 3395-18
IP237HV	★ 3599 3395-19
IP238	★ 3599 3393-44
IP238A	★ 3599 3393-45
IP240-12	★ 3599 3387-29
IP240-15	★ 3599 3388-29
IP240-5	★ 3599 3384-91
IP240A-12	★ 3599 3387-30
IP240A-15	★ 3599 3388-30
IP240A-5	★ 3599 3384-92
IP250	★ 3599 3393-16
IP250A	★ 3599 3393-17
IP2524	★ 3599 3395-122
IP2524B	★ 3599 3395-123
IP2525A	★ 3599 3395-124
IP2526	★ 3599 3395-125
IP2526A	★ 3599 3395-126
IP2527	★ 3599
IP2842	★ 3599 3395-127
IP2843	★ 3599 3395-128
IP293	★ 3599 2895-87
IP293D	★ 3599 2895-86
IP309	3384-93
IP309A	3384-94
IP317	★ 3599 3393-84
IP317A	★ 3599 3393-85
IP317AHV	★ 3599 3394-37
IP317HV	★ 3599 3394-38
IP320-12	★ 3599 3391-43
IP320-15	★ 3599 3391-109
IP320-5	★ 3599 3390-36
IP320A	★ 3599 3390-37
IP320A-12	★ 3599 3391-44
IP320A-15	★ 3599 3391-110
IP323	★ 3599 3385-16
IP323-12	★ 3599 3387-81
IP323-15	★ 3599 3388-72
IP323A	★ 3599 3385-17
IP323A-15	★ 3599 3388-73
IP33063	★ 3599 3395-129
IP337	★ 3599 3394-69
IP337A	★ 3599 3394-70
IP337AHV	★ 3599 3395-20
IP337HV	★ 3599 3395-21
IP338	★ 3599 3393-46
IP338A	★ 3599 3393-47
IP340-12	★ 3599 3387-31
IP340-15	★ 3599 3388-31
IP340-5	★ 3599 3384-95
IP34060	★ 3599 3395-130
IP34063	★ 3599 3395-131
IP340A-12	★ 3599 3387-32
IP340A-15	★ 3599 3388-32
IP340A-5	★ 3599 3384-96
IP350	★ 3599 3393-18
IP35060	★ 3599 3395-132
IP35063	★ 3599 3395-133
IP350A	★ 3599 3393-19
IP3524	★ 3599 3395-134
IP3524B	★ 3599 3395-135
IP3525A	★ 3599 3395-136
IP3526	★ 3599 3395-137
IP3526A	★ 3599 3395-138
IP3527	★ 3599
IP3842	★ 3599 3395-139
IP3843	★ 3599 3395-140
IP494A	★ 3599 3395-141
IP494Z	★ 3599 3395-142
IP5560	★ 3599 3395-143
IP5560C	★ 3599 3395-144
IP5561	★ 3599 3395-145
IP5561C	★ 3599 3395-146
IP7805	★ 3599 3384-97
IP7805A	★ 3599 3384-98
IP7805AC	★ 3599 3384-99
IP7805C	★ 3599 3384-100
IP7812	★ 3599 3387-33
IP7812A	★ 3599 3387-34
IP7812AC	★ 3599 3387-35
IP7812C	★ 3599 3387-36
IP7815	★ 3599 3388-33
IP7815A	★ 3599 3388-34
IP7815AC	★ 3599 3388-35
IP7815C	★ 3599 3388-36
IP7905	★ 3599 3390-38
IP7905A	★ 3599 3390-39
IP7905AC	★ 3599 3390-40
IP7905C	★ 3599 3390-41
IP7912	★ 3599 3391-45
IP7912A	★ 3599 3391-46
IP7912AC	★ 3599 3391-47
IP7912C	★ 3599 3391-48
IP7915	★ 3599 3391-111
IP7915A	★ 3599 3391-112
IP7915AC	★ 3599 3391-113
IP7915C	★ 3599 3391-114
TDA1060	★ 3599 3395-147

Intel

Device	Page-Line
1103	¶ 439-12
2001	★ 4067 3811-53 ¶ 437-10
2001-2	★ 4067 3811-47
2004	3811-84 ¶ 433-13 ¶ 438-15
2004-2	3811-78
2004-3	3811-93
2104A	¶ 400-7
2104A	¶ 438-8
2107A	¶ 439-12
2107B	¶ 439-12
2114AL-1	3836-38

¶ Indicates page number in Application Note Directory.
★ Indicates additional data is provided on the page noted.

Intel (Cont'd)

Device	Page-Line
2114AL-2	3836-44
2114AL-3	3836-49
2114AL-4	3836-69
2115A	3834-75
2115A-2	3834-97
2115AL	3834-76
2115AL-2	3834-98
2115H-2	3834-56
2115H-3	3834-61
2115H-4	3834-69
2117	¶ 400-11
2118	¶ 438-12
2125A	3834-77
2125A-2	3834-99
2125AL	3834-78
2125AL-2	3834-100
2125H-1	3834-53
2125H-2	3834-58
2125H-3	3834-62
2125H-4	3834-70
2141-2	3840-46
2141-3	3840-48
2141-4	3840-58
2141-5	3840-67
2141L-3	3840-49
2141L-4	3840-59
2141L-5	3840-68
2147-3	3840-5
2147A	3840-28
2147A-3	3840-6
2147AL	3840-29
2147AL-3	3840-7
2147H	3840-30
	¶ 439-7
2147H-1	3839-100
2147H-2	3839-113
2147H-3	3840-8
2147HL	3840-31
2147HL-3	3840-9
2148H	3836-25
2148H-2	3835-96
2148H-3	3836-8
2148HL	3836-26
2148HL-3	3836-9
2149H	3836-27
2149H-2	3835-97
2149H-3	3836-10
2149HL	3836-28
2164A	¶ 438-12
2164A	¶ 439-11
2186	¶ 438-13
2187	¶ 438-13
2416	¶ 439-12
2708	¶ 364-11
27128-25	★ **4074**
	3823-31
27128-3	★ **4074**
	3823-56
27128-30	★ **4074**
	3823-50
27128-4	★ **4074**
	3823-73
27128-45	★ **4074**
	3823-69
27128A	★ **4074**
	3822-81
27128A-1	★ **4074**
	3822-97
27128A-20	★ **4074**
	3822-80
27128A-25	★ **4074**
	3822-82
27128A-3	★ **4074**
	3822-83
27128A-30	★ **4074**
	3822-84
2714	¶ 364-11
2716	3819-83
	¶ 364-11
2716-1	3819-75
2716-2	3819-80
2716-5	3819-90
2716-6	3819-92
27256	3824-49
	¶ 437-3
27256-1	3823-86
27256-2	3824-26
27256-20	3823-93
27256-25	3823-100
27256-3	3823-108

Device	Page-Line
27256-30	3823-109
27256-5	3823-101
2732A	3820-83
2732A-2	3820-76
2732A-20	3820-73
2732A-25	3820-81
2732A-3	3820-88
2732A-30	3820-89
2732A-4	3820-104
2732A-45	3820-109
27512	★ **4076**
	3824-99
27512-2	★ **4076**
	3824-86
27512-20	★ **4076**
	3824-87
27512-25	★ **4076**
	3824-88
27512-3	★ **4076**
	3824-89
27512-30	★ **4076**
	3824-90
27513	★ **4077**
	3823-81
27513-2	★ **4077**
	3822-87
27513-20	★ **4077**
	3822-88
27513-25	★ **4077**
	3822-89
27513-3	★ **4077**
	3822-90
27513-30	★ **4077**
	3822-91
2764	3822-13
2764-2	3821-99
2764-25	3822-14
2764-3	3822-42
2764-30	3822-43
2764-4	3822-67
2764-45	3822-68
2764A	3822-22
2764A-1	3821-7
2764A-2	3821-106
2764A-20	3821-14
2764A-25	3821-19
2764A-3	3821-26
2764A-30	3821-27
2764A-4	3821-28
2764A-45	3821-29
27916	★ **4080**
	890-70
	★ **4080**
	3823-39
27916-3	★ **4080**
	3822-85
27916-4	★ **4080**
	3822-86
27C256	★ **4079**
	3823-94
27C256-1	★ **4079**
	3823-83
27C256-17	★ **4079**
	3823-84
27C256-170	★ **4079**
	3823-85
27C256-2	★ **4079**
	3823-87
27C256-20	★ **4079**
	3823-88
27C256-200	★ **4079**
	3823-89
27C256-25	★ **4079**
	3823-95
27C256-250	★ **4079**
	3823-96
27C256-3	★ **4079**
	3823-102
27C256-30	★ **4079**
	3823-103
27C256-300	★ **4079**
	3823-104
27C64	★ **4078**
	3821-86
27C64-1	★ **4078**
	3821-1
27C64-15	★ **4078**
	3821-2
27C64-150	★ **4078**
	3821-3
27C64-2	★ **4078**
	3821-8

Device	Page-Line
27C64-20	★ **4078**
	3821-9
27C64-200	★ **4078**
	3821-10
27C64-25	★ **4078**
	3821-15
27C64-250	★ **4078**
	3821-16
27C64-3	★ **4078**
	3821-20
27C64-30	★ **4078**
	3821-21
27C64-300	★ **4078**
	3821-22
2815	3812-35
2815-3	3812-85
2815-4	3812-109
2816	3812-36
	¶ 433-12
2816-3	3812-86
2816-4	3812-110
2816A	3812-37
	¶ 433-13
2816A-3	3812-87
2816A-4	3812-111
2816B	3812-6
2816B-1	3812-4
2816B-2	3812-7
2816B-3	3812-8
2816B-4	3812-9
2817	¶ 433-13
2817A	3812-52
2817A-1	3812-5
2817A-2	3812-26
2817A-3	3812-102
2817A-4	3812-116
2864	★ **4068**
2910	3377-143
2910A	3377-144
2910A/2911A	¶ 411-5
2911A	3377-47
2912	¶ 411-5
2912A	3379-67
2913	3377-89
	¶ 411-8
2914	3377-90
	¶ 411-8
2920	844-75
	¶ 360-4
	¶ 360-11
	¶ 360-13
	¶ 365-9
	¶ 421-8
	3404-108
2921	844-76
	¶ 365-9
	3404-109
29C50	3377-103
29C51	3377-104
3002	856-11
3207A	¶ 439-12
3222	¶ 439-12
3245	¶ 439-12
3632	3820-40
3632-1	3820-36
3636B	3819-14
3636B-1	3818-95
3636B-2	3818-115
5101	¶ 439-12
51C256H-10	3828-84
51C256H-12	3828-107
51C256H-15	3829-32
51C256H-20	3829-62
51C256L-15	3829-33
51C256L-20	3829-63
51C259H-15	3827-120
51C259H-20	3828-5
51C259L-15	3827-121
51C259L-20	3828-6
51C64H-10	3827-9
51C64H-12	3827-20
51C64L-10	3827-10
51C64L-12	3827-21
51C66-25	★ **4081**
	3846-30
51C66-30	★ **4081**
	3846-31
51C66-35	★ **4081**
	3846-32
51C66-35L	★ **4081**
	3846-33

Device	Page-Line
51C67-35	★ **4082**
	3844-17
51C68-30	★ **4083**
	3842-107
51C68-35	★ **4083**
	3842-109
51C68-35L	★ **4083**
	3842-110
51C69-25	★ **4084**
	3842-106
51C69-30	★ **4084**
	3842-108
51C69-35	★ **4084**
	3842-111
51C69-35L	★ **4084**
	3842-112
5235	¶ 439-12
5244	¶ 439-12
5C121	★ **4665**
7110	3826-4
7114	3826-7
7220	2892-3
7220	1465-30
7230	2892-6
7242	2899-12
7250	2892-9
7254	2892-17
7254	2898-69
7425	2892-15
80130	1461-34
80186	1461-61
80186	1435-20
80188	1461-68
80188	1435-21
8020H	1456-101
8021	¶ 365-15
8021H	1456-102
8021H	1421-3
8022	1456-103
	¶ 365-15
80286	1461-41
80286	1435-22
80287	1461-33
8031	¶ 380-4
8031AH	1457-40
8031AH	1421-4
8032	1421-5
8035	¶ 365-15
8035AHL	1456-16
8035AHL	1421-6
8039	¶ 365-15
8039AHL	1456-17
8039AHL	1421-7
8039HL	1456-18
8040AHL	1456-19
8040AHL	1421-8
8041	¶ 365-15
8041	¶ 375-1
8041A	1457-430
8041AH	1457-18
8041AH	1457-270
8041AH	1468-68
8041AH-2	1457-19
8041AH-2	1457-271
8042	1457-20
8042	1468-70
8044	1457-31
8044	1468-72
8048	1456-56
	¶ 365-15
	¶ 375-1
8048AH	1456-57
8048AH	1421-9
8048H	1456-58
8049	¶ 365-15
8049	¶ 366-15
8049AH	1456-59
8049AH	1421-10
8049H	1456-60
8049HL	1456-61
8050AH	1456-62
8050AH	1421-11
8051	¶ 380-4
8051AH	1457-47
8051AH	1421-12
8052	1457-48
8052	1421-13
8080	¶ 364-11
8080	¶ 375-6

Device	Page-Line
8080A	1457-66
	¶ 365-3
	¶ 373-15
	1421-14
8080A-1	1457-67
8080A-2	1457-68
8085	¶ 380-5
8085A	¶ 365-3
8085A	¶ 367-15
8085A	¶ 373-15
8085AH	1457-289
8085AH	1421-15
8085AH-2	1457-290
8086	1461-42
	¶ 367-15
	1435-23
8086-1	1461-43
8086-2	1461-44
8087-2	1435-24
8088	1462-47
8088-2	1462-48
8089	1461-64
8089	1433-27
8096	1463-91
80A35	1456-20
80A39	1456-21
80A48L	1456-63
80A49	1456-64
80C31	1457-41
80C31	1421-16
80C35	1456-22
80C39	1456-23
80C39	1421-17
80C48	1456-65
80C49	1456-66
80C49	1421-18
80C51	1457-49
80C51	1421-19
8155	1459-58
8155	1457-409
8155-2	1459-59
8155-2	1457-410
8155H	1459-60
8155H-2	1457-1
8156	1457-2
8156	1457-411
8156-2	1457-3
8156-2	1457-412
8156H	1457-4
8156H-2	1457-5
8185	1457-420
8185-2	1457-421
8186	2025-4
81C28-200	3838-110
81C28L-200	3838-111
8202	¶ 367-15
8202A	2892-69
8202A	1457-147
8202A	1457-315
8202A	1461-110
8203	2892-70
	¶ 438-12
	1457-148
	1457-316
	1461-111
8205	2892-71
8205	1456-117
8205	1457-141
8205	1457-314
8206	2878-19
8206	1457-152
82062	1468-82
8207	1461-112
8208	1461-113
8212	1457-174
	¶ 364-11
8214	1459-20
8216	1456-108
8216	1457-88
8216	1457-299
8218	1457-115
82188	1461-94
8219	1457-303
8224	1457-120
	¶ 364-11
82258	1461-108
8226	1456-109
8226	1457-89
8226	1457-300
8228	1457-260
	¶ 364-11
82284	1461-56

Device	Page-Line
82288	1461-53
8231A	1457-82
8231A	1469-76
8232	844-74
8232	1457-154
8232	1469-119
8237	1466-78
8237A	1457-354
8237A-4	1457-355
8237A-5	1457-356
8238	1457-261
8243	1459-10
8243	1457-168
8243	1457-329
8243	1468-66
82501	1458-18
8251	2901-25
	¶ 364-11
	1456-1
8251A	1459-22
8251A	1457-199
8251A	1457-342
8253	1457-384
8253-5	1457-385
8254	1457-386
8255A	1459-47
8255A	1457-240
8255A	1468-7
8255A-5	1457-396
8256	1457-192
8256	1461-120
8257	1457-217
8257	1457-364
8257	1466-79
	¶ 364-11
	¶ 365-3
8257-5	1457-218
8257-5	1457-365
82586	1458-19
8259	1459-30
8259-5	1459-31
8259A	1459-32
8259A	1457-223
8259A	1457-374
8259A	1461-127
8259A-2	1459-33
8259A-2	1457-224
8259A-2	1457-375
8259A-2	1458-10
8259A-5	1458-11
8259A-8	1459-34
8259A-8	1457-225
8259A-8	1457-376
8271	1459-1
8271	1457-155
8271	1457-322
8271	1467-32
8271-6	1459-2
82720	1465-91
8272A	1467-54
8273	1457-16
8273	1457-257
8273	1457-428
82730	1461-139
82730	1466-9
82731	1462-3
82731	1466-32
8274	1457-259
8274	1469-40
8275	1456-114
8275	1457-124
8275	1457-306
8275	1465-99
	¶ 364-11
8276	1457-125
8276	1465-79
8279	1457-183
8279	1458-15
	¶ 364-11
8279-5	1457-184
8282	1462-34
8283	1462-26
8284A	1461-97
8284A-1	1461-98
8286	1457-437
8287	1457-436
8288	1461-86
8288-1	1461-93
8289	1461-76
8291	1459-7
8291A	1457-162
8291A	1457-328

(Continued)

Arranged alphanumerically from left to right.

ADVERTISERS' PRODUCT INDEX

Device	Page-Line
Intel	**(Cont'd)**
8291A	1461-117
8291A	1458-3
8292	1457-160
8292	1457-326
8292	1467-93
8293	1457-163
8293	1458-4
8294	1457-138
8294	1469-115
8295	1468-10 ¶ 367-16
82C03	1457-149
82C03	1457-317
82HS181	3817-103
82HS191	3819-15
82HS321	3820-37
82S181	3817-110
82S191	3819-51
82S321	3820-41
8355	1457-13
8355	1457-424
8355-2	1457-14
8355-2	1457-425
8396	1463-92
86/310	¶ 381-4
86/330	¶ 381-4
8641A	1457-21
8641A	1457-272
8741	¶ 365-15
8741	¶ 375-1
8741A	1457-22
8741A	1457-273
8741A	1457-431
8741A	1468-67
8742	1457-23
8742	1468-69
8744	1457-32
8744	1468-71
8748	¶ 365-15
8748	¶ 375-1
8748-8	1456-6
8748H	1456-7
8748H	1421-20
8749H	1456-8
8749H-8	1456-9
8751	1457-35 ¶ 380-4
8751H	1421-21
8755A	1459-51
8755A	1457-318
8755A	1457-401
87C256	★ **4079** 3823-97
87C256-2	★ **4079** 3823-90
87C256-20	★ **4079** 3823-91
87C256-200	★ **4079** 3823-92
87C256-25	★ **4079** 3823-98
87C256-250	★ **4079** 3823-99
87C256-3	★ **4079** 3823-105
87C256-30	★ **4079** 3823-106
87C256-300	★ **4079** 3823-107
87C64	★ **4078** 3821-87
87C64-1	★ **4078** 3821-4
87C64-15	★ **4078** 3821-5
87C64-150	★ **4078** 3821-6
87C64-2	★ **4078** 3821-11
87C64-20	★ **4078** 3821-12
87C64-200	★ **4078** 3821-13
87C64-25	★ **4078** 3821-17
87C64-250	★ **4078** 3821-18
87C64-3	★ **4078** 3821-23
87C64-30	★ **4078** 3821-24
87C64-300	★ **4078** 3821-25
8PK70AZ	★ **4069** 2046-40
BPK72	¶ 431-9
BPK72	¶ 431-10
BPK72AZ	★ **4070** 2046-41
BPK74	★ **4071** 2046-42
CHMOS-1 Library	4479-26
IM65X61-1	3833-61
IM6658	3817-158
IM6658M	3817-159
INTELLEC11-MODEL245	1815-11
Intellec Series II	¶ 374-13
IntellecIII	1815-12
M2114A-4	3836-70
M2114A-5	3836-82
M2114AL-3	3836-50
M2114AL-4	3836-71
M2147H	3840-32
M2147H-2	3839-114
M2147H-3	3840-10
M2148H	3836-29
M27128	3823-6
M27128-45	3823-70
M2716	3819-84
M2732A-25	3812-120
M2732A-45	3812-122
M2764-25	3813-38
M2764-45	3813-71
M2816A	3812-38
M2817	3812-117
M3001	887-46
M3632	3820-42
M3632	3820-43
M51C259H-20	3828-4
M8035HL	1421-22
M8035L	1456-24
M8039HL	1421-23
M8048H	1456-67
M8049H	1456-68
M8080A	1457-69
M8085A	1457-291
M8085AH	1457-292
M8086	1461-45
M80C31	1421-24
M80C39	1421-25
M80C49	1421-26
M80C51	1457-50
M80C51	1421-27
M8155	1457-413
M8155H	1457-6
M8185	1457-422
M8212	1457-175
M8214	1469-146
M8216	1457-97
M8224	1457-121
M8226	1457-98
M8228	1457-262
M8231A	1457-83
M8243	1459-11
M8251A	1457-200
M8253	1457-387
M8255A	1457-241
M8257	1457-219
M8257	1457-357
M8259A	1457-377
M8282	1462-35
M8283	1462-27
M8284	1461-99
M8286	1457-29
M8286	1457-276
M8286	1457-434
M8286	1462-19
M8287	1457-30
M8287	1457-277
M8287	1457-435
M8287	1462-8
M8288	1461-87
M8289	1461-77
M8741A	1457-24
M8748	1456-10
M8749H	1421-28
M8751H	1457-36
M8755A	1457-319
MCS-48	¶ 375-1
MCS-85	¶ 380-5
NDS-I	1815-13
PCB75	★ **4072** 2046-43
PCB76	★ **4073** 2046-14
PL/M-80	¶ 375-6
SC121	4467-1
SDK-86	2025-27
SYSMB2	2021-39
UPI-41	¶ 375-1
iAPX268/10	1435-25
IBCK10	2046-25
IBCK12	2046-26
iMDX225	1815-14
IPDS	1815-15
iRCB44/10	2005-29
iRMX 86	¶ 381-4
iSBC010CX	2032-10
iSBC010EX	2032-11
iSBC012B	2032-35
iSBC012C	2032-34
iSBC012CX	2032-5
iSBC012EX	2032-33
iSBC020CX	2032-14
iSBC020EX	2032-15
iSBC028A	2032-30
iSBC028C	2032-29
iSBC028CX	2032-3
iSBC032A	2032-23
iSBC040EX	2032-18
iSBC056A	2032-32
iSBC056C	2032-31
iSBC056CX	2032-4
iSBC064A	2032-25
iSBC186/03A	2021-27
iSBC186/224	2021-38
iSBC188/48	2011-2
iSBC204	2031-43
iSBC208	2031-39
iSBC215	2031-40
iSBC217B	2031-45
iSBC220	2031-38
iSBC251	2032-6
iSBC254S	2032-2
iSBC264	2032-13
iSBC286/10	2023-6
iSBC286/100	2021-40
iSBC286/10A	2021-31
iSBC286/12	2021-32
iSBC300	2032-22
iSBC301	2032-17
iSBC302	2032-20
iSBC304	2032-27
iSBC3042	2032-26
iSBC307	2032-28
iSBC337A	2033-6
iSBC340	2032-8
iSBC341	2032-21
iSBC428	2032-7
iSBC464	2032-24
iSBC517	2031-46
iSBC519	2032-1
iSBC534	2031-44
iSBC544	2011-16
iSBC544	2031-41
iSBC556	2031-48
iSBC569	2011-17
iSBC569	2031-42
iSBC580	2031-47
iSBC80/10B	2011-3 ¶ 385-13
iSBC80/20-4	¶ 385-13
iSBC80/24	2011-7 ¶ 385-13
iSBC80/30	2011-6 ¶ 385-13
iSBC80/40	¶ 385-13
iSBC86/05	2025-15 ¶ 385-13
iSBC86/12A	¶ 385-13
iSBC86/14	2025-19 ¶ 385-13
iSBC86/25	¶ 385-13
iSBC86/30	2025-20
iSBC86/35	2021-34
iSBC86/40	¶ 385-13
iSBC88/25	2011-22
iSBC88/40	2011-23
iSBC88/45	2023-7
iSBC88/45	2031-37
iSBCCSM/001	2035-41
iSBCLNK/001	2036-1
iSBCMEM/310	2032-12
iSBCMEM/312	2032-9
iSBCMEM/320	2032-16
iSBCMEM/340	2032-19
iSBX218A	2032-36
iSBX251	2033-7
iSBX270	2032-39
iSBX275	2005-1
iSBX275	2032-40
iSBX331	2033-4
iSBX332	2033-5
iSBX344	2005-30
iSBX350	2033-1
iSBX351	2033-3
iSBX352	2032-45
iSBX488	2033-8
Intersil	
2147	3840-33
5033	★ **3196**
7207	★ **1090**
7215	★ **1089**
7249	★ **1089**
82HM185C	3849-33
AD534	★ **3200**
AD541	★ **3200**
AD590I	★ **3604** 3404-132
AD590J	★ **3604** 3404-133
AD590K	★ **3604** 3404-134
AD590L	★ **3604** 3404-135
AD590M	★ **3604** 3404-136
AD7520J	★ **3200** 2859-20
AD7520K	★ **3200** 2858-34
AD7520L	★ **3200** 2860-17
AD7520S	★ **3200** 2859-21
AD7520T	★ **3200** 2858-35
AD7520U	★ **3200** 2860-18
AD7521J	★ **3200** 2869-26
AD7521K	★ **3200** 2869-13
AD7521L	★ **3200** 2868-29
AD7521S	★ **3200** 2869-27
AD7521T	★ **3200** 2869-14
AD7521U	★ **3200** 2868-30
AD7523J	★ **3200** 2850-28
AD7523K	★ **3200** 2851-13
AD7523L	★ **3200** 2850-23
AD7523S	★ **3200** 2850-29
AD7523T	★ **3200** 2851-14
AD7523U	★ **3200** 2850-24
AD7530J	★ **3200** 2859-22
AD7530K	★ **3200** 2858-36
AD7530L	★ **3200** 2857-1
AD7531J	★ **3200** 2869-28
AD7531K	★ **3200** 2869-15
AD7531L	★ **3200** 2868-31
AD7533J	★ **3200** 2859-37
AD7533K	★ **3200** 2859-5
AD7533L	★ **3200** 2857-18
AD7533S	★ **3200** 2859-38
AD7533T	★ **3200** 2859-6
AD7533U	★ **3200** 2857-19
AD7541A	2866-31
AD7541B	2863-21
AD7541J	2866-32
AD7541K	2863-22
AD7541L	2867-2
AD7541S	2867-3
AD7541T	2863-23
ADC0802	★ **3199** 2835-27
ADC0802C	★ **3199** 2835-28
ADC0803	★ **3199** 2835-29
ADC0803C	★ **3199** 2835-30
ADC0804	★ **3199** 2837-12
ADC0804C	★ **3199** 2837-13
CMOS Library	4478-22
D123A	2829-3
D123B	2829-4
D125A	2829-5
D125B	2829-6
D129A	2828-109
D129B	2828-110
DG118	★ **3196** 2824-91
DG120	★ **3196**
DG121	★ **3196**
DG123	★ **3196** 2824-119
DG123B	★ **3196** 2824-123
DG125	★ **3196** 2824-121
DG125B	★ **3196** 2824-125
DG126A	★ **3196** 2827-58
DG129A	★ **3196** 2827-38
DG133A	★ **3196** 2822-110
DG133B	★ **3196** 2823-7
DG134A	★ **3196** 2823-22
DG134B	★ **3196** 2823-34
DG139A	★ **3196** 2827-88
DG140A	★ **3196** 2827-23
DG141A	★ **3196** 2822-91
DG141B	★ **3196** 2822-98
DG142A	★ **3196** 2827-92
DG143	★ **3196** 2825-52
DG144A	★ **3196** 2825-30
DG144B	★ **3196** 2825-42
DG145A	★ **3196** 2827-83
DG146A	★ **3196** 2825-17
DG146B	★ **3196** 2825-20
DG151A	★ **3196** 2822-97
DG151B	★ **3196** 2822-100
DG152A	★ **3196** 2823-6
DG153A	★ **3196** 2827-27
DG153B	★ **3196** 2827-29
DG154A	★ **3196** 2827-48
DG154B	★ **3196** 2827-68
DG161A	★ **3196** 2825-19
DG162A	★ **3196** 2825-40
DG163A	★ **3196** 2827-85
DG163B	★ **3196** 2827-87
DG164A	★ **3196** 2827-90
DG164B	★ **3196** 2827-94
DG180A	★ **3196** 2822-87 2822-93
DG180B	★ **3196** 2822-88 2822-94
DG181A	★ **3196** 2822-102 2822-106
DG181B	★ **3196** 2822-113 2823-2
DG182A	★ **3196** 2823-13 2823-17
DG182B	★ **3196** 2823-26 2823-30
DG183A	★ **3196** 2827-15 2827-19
DG183B	★ **3196** 2827-16 2827-20
DG184A	★ **3196** 2827-30 2827-34
DG184B	★ **3196** 2827-40 2827-44
DG185A	★ **3196** 2827-51 2827-55
DG185B	★ **3196** 2827-60 2827-64
DG186A	★ **3196** 2825-9 2825-13
DG186B	★ **3196** 2825-10 2825-14
DG187A	★ **3196** 2825-22 2825-26
DG187B	★ **3196** 2825-32 2825-36
DG188A	★ **3196** 2825-45 2825-49
DG188B	★ **3196** 2825-54 2825-58
DG189A	★ **3196** 2826-1 2826-5
DG189B	★ **3196** 2826-2 2826-6
DG190A	★ **3196** 2826-9 2826-14
DG190B	★ **3196** 2826-10 2826-15
DG191A	★ **3196** 2826-24 2826-28
DG191B	★ **3196** 2826-31 2826-35
DG200	★ **3196** 2822-66
DG200C	★ **3196** 2822-74
DG200M	★ **3196** 2822-57
DG201C	★ **3196** 2823-65

¶ Indicates page number in Application Note Directory.
★ Indicates additional data is provided on the page noted.

Intersil (Cont'd)

Device	Page-Line
DG201M	★ 3196 2823-54
DG211	★ 3196 2823-89
DG212	★ 3196
DGM181B	★ 3196 2822-38
DGM182A	★ 3196 2822-39
DGM182B	★ 3196 2822-63
DGM183	★ 3196
DGM184	★ 3196
DGM185	★ 3196
DGM186	★ 3196
DGM187	★ 3196
DGM188	★ 3196
DGM189	★ 3196
DGM190	★ 3196
DGM191	★ 3196
G115A	2828-84
G115B	2828-85
G116A	2828-82
G116B	2828-83
G118A	2828-86
G118B	2828-87
G119A	2828-91
G119B	2828-92
G128	2828-52
ICH8500	★ 3601 3332-7 3357-172
ICH8500A	★ 3601 3332-2 3357-171
ICH8510	¶ 409-1
ICH8510I	★ 3600 2895-69 ★ 3600 3307-70 3348-72 3360-56 3330-88 3331-97 3400-94
ICH8510M	★ 3600 2895-70 ★ 3600 3307-71 3348-73 3360-57 3330-89 3331-98
ICH8515I	★ 3600 3307-68
ICH8515M	★ 3600 3307-69
ICH8520I	★ 3600 2895-71 ★ 3600 3307-72 3348-51 3360-58 3330-67 3331-99 3400-95
ICH8520M	★ 3600 2895-72 ★ 3600 3307-73 3348-52 3360-59 3330-68 3331-100
ICH8530I	★ 3600 2895-73 ★ 3600 3307-74 3348-47 3360-60 3330-63 3331-101 3400-96
ICH8530M	★ 3600 2895-74 ★ 3600 3307-75 3348-48 3360-61 (Continued)
ICH8530M	3330-64
ICH8530M	3331-102
ICL108LN	3346-46
ICL7104	¶ 393-8
ICL7104-12	★ 3199 2846-11
ICL7104-14	★ 3199 2846-31
ICL7104-16	★ 3199 2847-30
ICL7106	★ 3198 2848-4 ¶ 393-15 ¶ 393-19 ¶ 421-4 ¶ 421-12
ICL7107	★ 3198 2848-5 ¶ 393-15 ¶ 393-19 ¶ 421-12
ICL7109	★ 3199 2843-6 ¶ 393-19
ICL7115	★ 3199 2846-24
ICL7116	★ 3198 2848-6 ¶ 393-15
ICL7117	★ 3198 2848-7 ¶ 393-15
ICL7126	★ 3198 2848-8 ¶ 393-15
ICL7129	★ 3198 2848-61
ICL7134	2870-31
ICL7135	★ 3199 2848-58
ICL7136	★ 3198 2848-9
ICL7137	★ 3198 2848-10
ICL7600C	3335-21
ICL7600M	3335-22
ICL7601C	3335-23
ICL7601M	3335-24
ICL7605C	★ 3602 3306-74
ICL7605M	★ 3602 3306-75
ICL7606C	★ 3602 3306-76
ICL7606M	★ 3602 3306-77
ICL7611AC	★ 3600
ICL7611AC	★ 3601 3346-1
ICL7611AM	★ 3600
ICL7611AM	★ 3601 3346-2
ICL7611BC	★ 3600
ICL7611BC	★ 3601 3351-16
ICL7611BM	★ 3600
ICL7611BM	★ 3601 3351-17
ICL7611C	★ 3600
ICL7611C	★ 3601 3359-5 3334-28 3357-112
ICL7611M	★ 3600
ICL7611M	★ 3601 3347-28 3334-34
ICL7612AC	★ 3600
ICL7612AC	★ 3601 3346-3
ICL7612AM	★ 3600
ICL7612AM	★ 3601 3346-4
ICL7612BC	★ 3600
ICL7612BC	★ 3601 3351-18
ICL7612BM	★ 3600
ICL7612BM	★ 3601 3351-19
ICL7612C	★ 3600
ICL7612C	★ 3601 3359-1 (Continued)
ICL7612C	3334-17
ICL7612C	3334-83
ICL7612C	3357-114
ICL7612M	★ 3600
ICL7612M	★ 3601 3359-7 3334-35 3334-87
ICL7613AC	★ 3600
ICL7613AC	★ 3601 3346-7
ICL7613BC	★ 3600
ICL7613BC	★ 3601 3351-22
ICL7613BM	★ 3600
ICL7613BM	★ 3601 3351-23
ICL7613C	★ 3600
ICL7613C	★ 3601 3334-1 3334-36 3334-37
ICL7613DC	★ 3600
ICL7613DC	★ 3601 3357-104
ICL7613M	★ 3600
ICL7613M	★ 3601 3334-2 3334-38
ICL7614AC	★ 3601 3346-8
ICL7614AM	★ 3601 3346-9
ICL7614BC	★ 3601 3351-24
ICL7614BM	★ 3601 3351-25
ICL7614C	★ 3601 3334-3
ICL7614DC	★ 3601 3357-105
ICL7615	★ 3601 3346-10
ICL7615AC	★ 3601 3346-11
ICL7615BC	★ 3601 3351-26
ICL7615BM	★ 3601 3351-27
ICL7615C	★ 3601 3334-4
ICL7615DC	★ 3601 3357-106
ICL7616AC	3346-5
ICL7616AM	3346-6
ICL7616BC	3351-20
ICL7616BM	3351-21
ICL7616C	3359-2
ICL7616C	3334-18
ICL7616C	3334-84
ICL7616C	3357-115
ICL7616M	3334-5
ICL7616M	3334-39
ICL7616M	3334-88
ICL7621AC	★ 3600
ICL7621AC	★ 3601 3362-40
ICL7621AM	★ 3600
ICL7621AM	★ 3601 3362-41
ICL7621BC	★ 3600
ICL7621BC	★ 3601 3365-2
ICL7621BM	★ 3600
ICL7621BM	★ 3601 3365-3
ICL7621C	★ 3600
ICL7621C	★ 3601 3334-6
ICL7621DC	★ 3600
ICL7621DC	★ 3601 3368-36
ICL7622AC	★ 3601 3362-36
ICL7622AM	★ 3601 3362-37
ICL7622BC	★ 3601 3365-6
ICL7622BM	★ 3601 3365-7
ICL7622C	★ 3601 3334-7
ICL7622DC	★ 3601 3368-38
ICL7631BC	★ 3600
ICL7631BC	★ 3601 3369-2
ICL7631BM	★ 3600
ICL7631BM	★ 3601 3369-3
ICL7631C	★ 3600
ICL7631C	★ 3601 3334-8
ICL7631CC	★ 3600
ICL7631CC	★ 3601 3369-12
ICL7631CM	★ 3600
ICL7631CM	★ 3601 3369-13
ICL7631EC	★ 3600
ICL7631EC	★ 3601 3369-21
ICL7631M	★ 3600
ICL7631M	★ 3601 3347-29
ICL7632BC	★ 3600
ICL7632BC	★ 3601 3369-6
ICL7632BM	★ 3600
ICL7632BM	★ 3601 3369-7
ICL7632C	★ 3600
ICL7632C	★ 3601 3334-52
ICL7632CC	★ 3600
ICL7632CC	★ 3601 3369-16
ICL7632CM	★ 3600
ICL7632CM	★ 3601 3369-17
ICL7632EC	★ 3600
ICL7632EC	★ 3601 3369-23
ICL7632M	★ 3600
ICL7632M	★ 3601 3347-30 3334-53
ICL7641BC	★ 3600
ICL7641BC	★ 3601 3371-9
ICL7641BM	★ 3600
ICL7641BM	★ 3601 3371-10
ICL7641CC	★ 3600
ICL7641CC	★ 3601 3373-16
ICL7641CM	★ 3600
ICL7641CM	★ 3601 3373-17
ICL7641EC	★ 3600
ICL7641EC	★ 3601 3374-10
ICL7642BC	★ 3600
ICL7642BC	★ 3601 3371-11
ICL7642BM	★ 3600
ICL7642BM	★ 3601 3371-12
ICL7642C	★ 3600
ICL7642C	★ 3601 3334-9
ICL7642CC	★ 3600
ICL7642CC	★ 3601 3373-18
ICL7642CM	★ 3600
ICL7642CM	★ 3601 3373-19
ICL7642EC	★ 3600
ICL7642EC	★ 3601 3374-11
ICL7642M	★ 3600
ICL7642M	★ 3601 3347-31
ICL7650C	★ 3601 3335-9
ICL7652	★ 3601 3335-12
ICL7660	★ 3603 3405-34 3405-46 ¶ 391-13
ICL7662C	★ 3603 3405-22
ICL7662M	★ 3603 3405-23
ICL7663	★ 3603 3392-94
ICL7664	★ 3603 3394-48
ICL7665	★ 3604 3405-151
ICL7667C	★ 3604 2895-50
ICL7667M	★ 3604 2895-51
ICL7673	★ 3603 1469-100
ICL8007	★ 3600
ICL8007	★ 3601 3345-28 ¶ 408-3
ICL8007AC	★ 3600
ICL8007AC	★ 3601 3332-31 3357-166
ICL8007AM	★ 3600
ICL8007AM	★ 3601 3332-32 3357-167
ICL8007C	★ 3600
ICL8007C	★ 3601 3357-175
ICL8007M	★ 3600
ICL8007M	★ 3601 3357-141
ICL8013C	3400-130
ICL8013M	3400-131
ICL8018AC	★ 3200 3404-115
ICL8018AM	★ 3200 3404-116
ICL8019AC	★ 3200 3404-117
ICL8019AM	★ 3200 3404-118
ICL8020AC	★ 3200 3404-119
ICL8020AM	★ 3200 3404-120
ICL8021C	★ 3600
ICL8021C	★ 3604 3347-21 3334-40
ICL8021M	★ 3600
ICL8021M	★ 3604 3347-22 3334-41
ICL8022C	★ 3600 3334-49 3366-48
ICL8022M	★ 3600 3334-50 3363-51
ICL8023C	★ 3600 3334-54
ICL8023M	★ 3600 3334-55
ICL8038	¶ 421-7
ICL8038C	★ 3604 3376-43
ICL8038M	★ 3604 3376-44
ICL8043C	★ 3600
ICL8043C	★ 3601 3369-1
ICL8043M	★ 3600
ICL8043M	★ 3601 3368-59
ICL8048	¶ 409-19
ICL8048C	★ 3602 3307-13
ICL8049	¶ 409-19
ICL8049C	★ 3602 3307-8
ICL8052	★ 3199 2848-45 ¶ 393-8
ICL8052A	★ 3199 2846-12 2846-32 2847-31
ICL8053	2848-46
ICL8053A	2848-62
ICL8063C	★ 3602 3316-180
ICL8063M	★ 3602 3316-181
ICL8068	★ 3199 2848-47 ¶ 393-8
ICL8068A	★ 3199 2848-63
ICL8069	★ 3604 3402-22
ICL8069M	★ 3604 3402-23
ICL8211	¶ 426-2
ICL8211C	★ 3604 3405-39
ICL8211M	★ 3604 3405-40
ICL8212	¶ 426-2
ICL8212C	★ 3604 3405-41
ICL8212M	★ 3604 3405-42
ICM7047	3320-122
ICM7170	1469-111
ICM7201	3400-92
ICM7206A	★ 3604 3382-66
ICM7206B	★ 3604 3382-67
ICM7206C	★ 3604 3382-68
ICM7206D	★ 3604 3382-69
ICM7207	★ 1090 834-119
ICM7207A	★ 1090 834-120
ICM7208	★ 1089 814-109
ICM7209	★ 1090 834-116 ★ 1090 2894-11
ICM7211	★ 1091 819-111 ★ 1091 2876-77
ICM7211A	★ 1091 819-112 ★ 1091 2876-78
ICM7211AM	★ 1091 819-106 ★ 1091 2876-60
ICM7211M	★ 1091 819-107 ★ 1091 2876-61
ICM7212	★ 1091 819-121 ★ 1091 2876-65
ICM7212A	★ 1091 819-122 ★ 1091 2876-66
ICM7212AM	★ 1091 819-125 ★ 1091 2876-69
ICM7212M	★ 1091 819-126 ★ 1091 2876-70
ICM7213	★ 1090 834-121
ICM7215	★ 1089 2876-134
ICM7216	★ 1089 816-93
ICM7216A	★ 1089 890-48
ICM7216B	★ 1089 890-49
ICM7216C	★ 1089 890-59
ICM7216D	★ 1089 890-60
ICM7217	★ 1089 816-32
ICM7217A	★ 1089 816-33

Arranged alphanumerically from left to right.

ADVERTISERS' PRODUCT INDEX

Intersil (Cont'd)

Device	Page-Line
ICM7217B	★ 1089 816-38 890-41
ICM7217C	★ 1089 816-39 890-42
ICM7218A	★ 1091 891-93 ★ 1091 2874-118
ICM7218B	★ 1091 891-94 ★ 1091 2874-119
ICM7218C	★ 1091 891-95 ★ 1091 2874-120
ICM7218D	★ 1091 891-96 ★ 1091 2874-121
ICM7218E	★ 1091 891-97 ★ 1091 2874-122
ICM7224	★ 1089 816-20
ICM7224A	★ 1089 816-21
ICM7225	★ 1089 816-22
ICM7225A	★ 1089 816-23
ICM7226	★ 1089 816-94
ICM7226A	★ 1089 890-50
ICM7226B	★ 1089 890-51
ICM7227	★ 1089 816-34
ICM7227A	★ 1089 816-35
ICM7227B	★ 1089 816-40 890-43
ICM7227C	★ 1089 816-41 890-46
ICM7231	★ 1091 2877-44
ICM7232	★ 1091 2877-75
ICM7233	★ 1091 2876-53
ICM7234	★ 1091 2876-111
ICM7235	★ 1091 2876-87
ICM7235A	★ 1091 2876-88
ICM7235AM	★ 1091 2876-89
ICM7235M	★ 1091 2876-90
ICM7236	★ 1089 816-18
ICM7236A	★ 1089 816-19
ICM7240	★ 1090 3383-19
ICM7242	★ 1090 3383-20
ICM7243	★ 1091 2877-25
ICM7249	★ 1089 3383-3
ICM7249M	★ 1089 3383-4
ICM7250	★ 1090 3383-21
ICM7260	★ 1090 3383-22
ICM7280	★ 1091 2874-105
ICM7281	★ 1091 2874-79
ICM7283	★ 1091 2874-106
ICM7555	★ 1090 3383-60
ICM7555M	★ 1090 3383-61
ICM7556	★ 1090 3383-70
ICM7556M	★ 1090 3383-71
IH181C	2822-114
IH181C	2823-3
IH181M	2822-103
IH181M	2822-107
IH182C	2823-27
IH182C	2823-31
IH182M	2823-14
IH182M	2823-18
IH184C	2827-41
IH184C	2827-45
IH184M	2827-31
IH184M	2827-35
IH185C	2827-61
IH185C	2827-65
IH185M	2827-52
IH185M	2827-56
IH187C	2825-33
IH187C	2825-37
IH187M	2825-23
IH187M	2825-27
IH188C	2825-55
IH188C	2825-59
IH188M	2825-46
IH188M	2825-50
IH190M	2826-11
IH190M	2826-16
IH191C	2826-32
IH191C	2826-36
IH191M	2826-25
IH191M	2826-29
IH200C	2822-71
IH200M	2822-67
IH201C	2823-50
IH201M	2823-44
IH202C	2823-51
IH202M	2823-45
IH311	★ 3196
IH312	★ 3196
IH401	★ 3196
IH5009 Series	¶ 402-18
IH5009C	2828-69
IH5009M	2828-70
IH5010C	2828-76
IH5010M	2828-77
IH5011C	2828-55
IH5011M	2828-56
IH5012C	2828-61
IH5012M	2828-62
IH5013C	2828-46
IH5013M	2828-47
IH5014C	2828-50
IH5014M	2828-51
IH5015C	2828-36
IH5015M	2828-37
IH5016C	2828-40
IH5016M	2828-41
IH5017C	2828-20
IH5017M	2828-21
IH5018C	2828-32
IH5018M	2828-33
IH5019C	2828-28
IH5019M	2828-29
IH5020C	2828-24
IH5020M	2828-25
IH5021C	2828-7
IH5021M	2828-8
IH5022C	2828-14
IH5022M	2828-15
IH5023C	2828-9
IH5023M	2828-10
IH5024C	2828-16
IH5024M	2828-17
IH5025C	★ 3196 2828-67
IH5025M	★ 3196 2828-68
IH5026C	★ 3196 2828-74
IH5026M	★ 3196 2828-75
IH5027C	★ 3196 2828-53
IH5027M	★ 3196 2828-54
IH5028C	★ 3196 2828-59
IH5028M	★ 3196 2828-60
IH5029C	★ 3196 2828-44
IH5029M	★ 3196 2828-45
IH5030C	★ 3196 2828-48
IH5030M	★ 3196 2828-49
IH5031C	★ 3196 2828-34
IH5031M	★ 3196 2828-35
IH5032C	★ 3196 2828-38
IH5032M	★ 3196 2828-39
IH5033C	2828-18
IH5033M	2828-19
IH5034C	★ 3196 2828-30
IH5034M	★ 3196 2828-31
IH5035C	★ 3196 2828-26
IH5035M	★ 3196 2828-27
IH5036C	★ 3196 2828-22
IH5036M	★ 3196 2828-23
IH5037C	★ 3196 2828-5
IH5037M	★ 3196 2828-6
IH5038C	★ 3196 2828-12
IH5038M	★ 3196 2828-13
IH5040C	★ 3196 2822-18
IH5040M	★ 3196 2822-17
IH5041C	★ 3196 2822-72
IH5041M	★ 3196 2822-68
IH5042C	★ 3196 2825-7
IH5042M	★ 3196 2825-3
IH5043C	★ 3196 2825-98
IH5043M	★ 3196 2825-94
IH5044C	★ 3196 2826-95
IH5044M	★ 3196 2826-86 2826-96
IH5045C	★ 3196 2827-13
IH5045M	★ 3196 2827-9
IH5046C	★ 3196 2827-82
IH5046M	★ 3196 2827-79
IH5047C	★ 3196 2827-121
IH5047M	★ 3196 2827-118
IH5048C	★ 3196 2822-37
IH5048M	★ 3196 2822-36
IH5049C	★ 3196 2826-103
IH5049M	★ 3196 2826-102
IH5050C	★ 3196 2824-135
IH5050M	★ 3196 2824-134
IH5051C	★ 3196 2825-65
IH5051M	★ 3196 2825-64
IH5052C	★ 3196 2823-52
IH5052M	★ 3196 2823-46
IH5053C	★ 3196 2823-53
IH5053M	★ 3196 2823-47
IH5108C	2830-171
IH5108M	2830-170
IH5110	★ 3603 3404-26
IH5111	★ 3603 3404-27
IH5112	★ 3603 3404-28
IH5113	★ 3603 3404-29
IH5114	★ 3603 3404-30
IH5115	★ 3603 3404-31
IH5140C	★ 3196 2822-13
IH5140M	★ 3196 2822-4
IH5141C	★ 3196 2822-64
IH5141M	★ 3196 2822-40
IH5142C	★ 3196 2825-1
IH5142M	★ 3196 2824-136
IH5143C	★ 3196 2825-92
IH5143M	★ 3196 2825-66
IH5144C	★ 3196 2826-87
IH5144M	★ 3196 2826-88
IH5145C	★ 3196 2827-7
IH5145M	★ 3196 2826-104
IH5148	★ 3196 2827-112
IH5149	★ 3196 2827-106
IH5150	★ 3196 2822-1
IH5151	★ 3196 2827-107
IH5200	★ 3196 2822-58
IH5200C	★ 3196 2822-75
IH5201C	★ 3196 2823-66
IH5201M	★ 3196 2823-55
IH5208C	2830-69
IH5208M	2830-68
IH5341	2827-113
IH5362	2827-108
IH6108C	2830-162
IH6108M	2830-155
IH6116C	2831-84
IH6116M	2831-85
IH6201	★ 3196 2828-105
IH6201C	★ 3196 2896-108
IH6201M	★ 3196 2896-109
IH6208C	2830-53
IH6208M	2830-48
IH6216C	2831-25
IH6216M	2831-26
IM26C61	★ 1645 1466-89
IM26C62	★ 1645 1466-93
IM4702	★ 1645 2900-22
IM4712	★ 1645 2900-23
IM5200	4473-83
IM6402	★ 1645 2901-79 ★ 1645 1462-111
IM6402-1I	★ 1645 1462-112
IM6402-1M	★ 1645 1462-113
IM6402AI	★ 1645 1462-114
IM6402AM	★ 1645 1462-115
IM6402M	★ 1645 2901-80
IM6403	★ 1645 2901-81 ★ 1645 1462-116
IM6403-1I	★ 1645 1462-117
IM6403AI	★ 1645 1462-118
IM6403AM	★ 1645 1462-119
IM6403M	★ 1645 2901-82
IM6653-1	3817-44
IM6653M	3817-45
IM6654	3816-73
IM6654-1	3816-72
IM6654A	3816-71
IM6654M	3816-74
IM8051	1457-51
IM80C31	1457-42
IM80C35	★ 1645 1456-25 ★ 1645 1421-29
IM80C39	★ 1645 1456-26 ★ 1645 1421-30
IM80C48	★ 1645 1456-69 ★ 1645 1421-31
IM80C49	★ 1645 1456-70 ★ 1645 1421-32
IM80C51	1457-52
IM82C43I	★ 1645 1457-166
IM82C43M	★ 1645 1457-167
ISC20000	4478-21
IT120	3309-106
IT120A	3309-107
IT121	3309-108
IT122	3309-109
IT130	3309-158
IT130A	3309-159
IT131	3309-160
IT132	3309-161
IT401	¶ 401-7
IT401A	¶ 401-7
IT500	¶ 408-16
InterceptJr	2023-19
LH0042	3357-145
LH0042C	3357-148
LH2101A	3363-18
LH2108A	★ 3600
LH2108A	★ 3601 3361-34
LH2308A	★ 3600
LH2308A	★ 3601 3361-46
LH2310	3329-31
LH2311	3314-58
LM100	3392-107
LM108	★ 3600
LM108	★ 3601 3349-2 3346-52
LM108A	★ 3600
LM108A	★ 3601 3342-32
LM305	3393-2
LM308	★ 3600
LM308	★ 3601 3356-6
LM308A	★ 3600
LM308A	★ 3601 3342-54
LM308LN	★ 3600
LM308LN	★ 3601 3356-2
MM450	2828-89
MM451	2828-80
MM452	2828-65
MM455	2828-42
MM550	2828-90
MM551	2828-81
MM552	2828-66
MM555	2828-43
NE555	3383-36
NE592	★ 3602 3307-149
SE592	★ 3602 3307-150
μA723	3393-117
μA733	3307-151
μA733C	3307-152
μA740	3357-152
μA740C	3357-180
μA748C	3355-38
μA777C	3353-15

Lattice Semiconductor

Device	Page-Line
EE64K8-45	★ 4096 3813-7
EE64K8-55	★ 4096 3813-11
EE64K8-70	★ 4096 3813-14
GAL16V8-15	★ 4666 4467-14 4467-26
GAL16V8-15L	★ 4666 4467-15
GAL16V8-25	★ 4666 4467-16 4467-114
GAL16V8-25L	★ 4666 4467-17 4467-27 4467-115
GAL16V8-35	★ 4666 4467-18 4468-76
GAL16V8-35L	★ 4666 4467-19 4468-77
GAL16Z8	4469-29
GAL20V8-15	★ 4667 4467-20 4467-28
GAL20V8-15L	★ 4667 4467-21 4467-29
GAL20V8-25	★ 4667 4467-22 4467-116
GAL20V8-25L	★ 4667 4467-23 4467-117
GAL20V8-35	★ 4667 4467-24 4468-78
GAL20V8-35L	★ 4667 4467-25 4468-79
L1010	★ 1092 843-96
L1016	★ 1093
L1017	★ 1094
PR64K-45	3813-6
PR64K-55	3813-10
PR64K-70	3813-12
PR64K8-45	★ 4097 3821-36
PR64K8-55	★ 4097 3821-49
PR64K8-70	★ 4097 3821-66
RAL10H8-15	4467-30
RAL10H8-15L	4467-31
RAL10H8-25	4467-118
RAL10H8-25L	4467-119
RAL10H8-35	4468-80
RAL10H8-35L	4468-81

¶ Indicates page number in Application Note Directory.
★ Indicates additional data is provided on the page noted.

Lattice Semiconductor (Cont'd)

Device	Page-Line
RAL10L8-15	4467-32
RAL10L8-15L	4467-33
RAL10L8-25	4467-120
RAL10L8-25L	4467-121
RAL10L8-35	4468-82
RAL10L8-35L	4468-83
RAL10P8-15	4467-34
RAL10P8-15L	4467-35
RAL10P8-25	4467-122
RAL10P8-25L	4467-123
RAL10P8-35	4468-84
RAL10P8-35L	4468-85
RAL12H6-15	4467-36
RAL12H6-15L	4467-37
RAL12H6-25	4467-124
RAL12H6-25L	4467-125
RAL12H6-35	4468-86
RAL12H6-35L	4468-87
RAL12L6-15	4467-38
RAL12L6-15L	4467-39
RAL12L6-25	4467-126
RAL12L6-25L	4468-1
RAL12L6-35	4468-88
RAL12L6-35L	4468-89
RAL12P6-15	4467-40
RAL12P6-15L	4467-41
RAL12P6-25	4468-2
RAL12P6-25L	4468-3
RAL12P6-35	4468-90
RAL12P6-35L	4468-91
RAL14H4-15	4467-42
RAL14H4-15L	4467-43
RAL14H4-25	4468-4
RAL14H4-25L	4468-5
RAL14H4-35	4468-92
RAL14H4-35L	4468-93
RAL14H8-15	4467-44
RAL14H8-15L	4467-45
RAL14H8-25	4468-6
RAL14H8-25L	4468-7
RAL14H8-35	4468-94
RAL14H8-35L	4468-95
RAL14L4-15	4467-46
RAL14L4-15L	4467-47
RAL14L4-25	4468-8
RAL14L4-25L	4468-9
RAL14L4-35	4468-96
RAL14L4-35L	4468-97
RAL14L8-15	4467-48
RAL14L8-15L	4467-49
RAL14L8-25	4468-10
RAL14L8-25L	4468-11
RAL14L8-35	4468-98
RAL14L8-35L	4468-99
RAL14P4-15	4467-50
RAL14P4-15L	4467-51
RAL14P4-25	4468-12
RAL14P4-25L	4468-13
RAL14P4-35	4468-100
RAL14P4-35L	4468-101
RAL14P8-15	4467-52
RAL14P8-15L	4467-53
RAL14P8-25	4468-14
RAL14P8-25L	4468-15
RAL14P8-35	4468-102
RAL14P8-35L	4468-103
RAL16H2-15	4467-54
RAL16H2-15L	4467-55
RAL16H2-25	4468-16
RAL16H2-25L	4468-17
RAL16H2-35	4468-104
RAL16H2-35L	4468-105
RAL16H6-15	4467-56
RAL16H6-15L	4467-57
RAL16H6-25	4468-18
RAL16H6-25L	4468-19
RAL16H6-35	4468-106
RAL16H6-35L	4468-107
RAL16H8-15	4467-58
RAL16H8-15L	4467-59
RAL16H8-25	4468-20
RAL16H8-25L	4468-21
RAL16H8-35	4468-108
RAL16H8-35L	4468-109
RAL16L2-15	4467-60
RAL16L2-15L	4467-61
RAL16L2-25	4468-22
RAL16L2-25L	4468-23
RAL16L2-35	4468-110
RAL16L2-35L	4468-111
RAL16L6-15	4467-62
RAL16L6-15L	4467-63
RAL16L6-25	4468-24
RAL16L6-25L	4468-25
RAL16L6-35	4468-112
RAL16L6-35L	4468-113
RAL16L8-15	4467-64
RAL16L8-15L	4467-65
RAL16L8-25	4468-26
RAL16L8-25L	4468-27
RAL16L8-35	4468-114
RAL16L8-35L	4468-115
RAL16P2-15	4467-66
RAL16P2-15L	4467-67
RAL16P2-25	4468-28
RAL16P2-25L	4468-29
RAL16P2-35	4468-116
RAL16P2-35L	4468-117
RAL16P6-15	4467-68
RAL16P6-15L	4467-69
RAL16P6-25	4468-30
RAL16P6-25L	4468-31
RAL16P6-35	4468-118
RAL16P6-35L	4468-119
RAL16P8-15	4467-70
RAL16P8-15L	4467-71
RAL16P8-25	4468-32
RAL16P8-25L	4468-33
RAL16P8-35	4468-120
RAL16P8-35L	4468-121
RAL16R4-15	4467-72
RAL16R4-15L	4467-73
RAL16R4-25	4468-34
RAL16R4-25L	4468-35
RAL16R4-35	4468-122
RAL16R4-35L	4468-123
RAL16R6-15	4467-74
RAL16R6-15L	4467-75
RAL16R6-25	4468-36
RAL16R6-25L	4468-37
RAL16R6-35	4468-124
RAL16R6-35L	4468-125
RAL16R8-15	4467-76
RAL16R8-15L	4467-77
RAL16R8-25	4468-38
RAL16R8-25L	4468-39
RAL16R8-35	4468-126
RAL16R8-35L	4468-127
RAL16RP4-15	4467-78
RAL16RP4-15L	4467-79
RAL16RP4-25	4468-40
RAL16RP4-25L	4468-41
RAL16RP4-35	4468-128
RAL16RP4-35L	4468-129
RAL16RP6-15	4467-80
RAL16RP6-15L	4467-81
RAL16RP6-25	4468-42
RAL16RP6-25L	4468-43
RAL16RP6-35	4468-130
RAL16RP6-35L	4468-131
RAL16RP8-15	4467-82
RAL16RP8-15L	4467-83
RAL16RP8-25	4468-44
RAL16RP8-25L	4468-45
RAL16RP8-35	4468-132
RAL16RP8-35L	4468-133
RAL18H4-15	4467-84
RAL18H4-15L	4467-85
RAL18H4-25	4468-46
RAL18H4-25L	4468-47
RAL18H4-35	4468-134
RAL18H4-35L	4468-135
RAL18L4-15	4467-86
RAL18L4-15L	4467-87
RAL18L4-25	4468-48
RAL18L4-25L	4468-49
RAL18L4-35	4468-136
RAL18L4-35L	4469-1
RAL18P4-15	4467-88
RAL18P4-15L	4467-89
RAL18P4-25	4468-50
RAL18P4-25L	4468-51
RAL18P4-35	4469-2
RAL18P4-35L	4469-3
RAL20H2-15	4467-90
RAL20H2-15L	4467-91
RAL20H2-25	4468-52
RAL20H2-25L	4468-53
RAL20H2-35	4469-4
RAL20H2-35L	4469-5
RAL20H8-15	4467-92
RAL20H8-15L	4467-93
RAL20H8-25	4468-54
RAL20H8-25L	4468-55
RAL20H8-35	4469-6
RAL20H8-35L	4469-7
RAL20L2-15	4467-94
RAL20L2-15L	4467-95
RAL20L2-25	4468-56
RAL20L2-25L	4468-57
RAL20L2-35	4469-8
RAL20L2-35L	4469-9
RAL20L8-15	4467-96
RAL20L8-15L	4467-97
RAL20L8-25	4468-58
RAL20L8-25L	4468-59
RAL20L8-35	4469-10
RAL20L8-35L	4469-11
RAL20P2-15	4467-98
RAL20P2-15L	4467-99
RAL20P2-25	4468-60
RAL20P2-25L	4468-61
RAL20P2-35	4469-12
RAL20P2-35L	4469-13
RAL20P8-15	4467-100
RAL20P8-15L	4467-101
RAL20P8-25	4468-62
RAL20P8-25L	4468-63
RAL20P8-35	4469-14
RAL20P8-35L	4469-15
RAL20PR6-35L	4469-16
RAL20R4-15	4467-102
RAL20R4-15L	4467-103
RAL20R4-25	4468-64
RAL20R4-25L	4468-65
RAL20R4-35	4469-17
RAL20R4-35L	4469-18
RAL20R6-15	4467-104
RAL20R6-15L	4467-105
RAL20R6-25	4468-66
RAL20R6-25L	4468-67
RAL20R6-35	4469-19
RAL20R6-35L	4469-20
RAL20R8-15	4467-106
RAL20R8-15L	4467-107
RAL20R8-25	4468-68
RAL20R8-25L	4468-69
RAL20R8-35	4469-21
RAL20R8-35L	4469-22
RAL20RP4-15	4467-108
RAL20RP4-15L	4467-109
RAL20RP4-25	4468-70
RAL20RP4-25L	4468-71
RAL20RP4-35	4469-23
RAL20RP4-35L	4469-24
RAL20RP6-15	4467-110
RAL20RP6-15L	4467-111
RAL20RP6-25	4468-72
RAL20RP6-25L	4468-73
RAL20RP6-35	4469-25
RAL20RP8-15	4467-112
RAL20RP8-15L	4467-113
RAL20RP8-25	4468-74
RAL20RP8-25L	4468-75
RAL20RP8-35	4469-26
RAL20RP8-35L	4469-27
SR16K4-25	★ **4085** 3841-2
SR16K4-25C	★ **4085** 3841-3
SR16K4-35	★ **4085** 3841-23
SR16K4-35C	★ **4085** 3841-24
SR16K4-45	★ **4085** 3841-63
SR16K4-45C	★ **4085** 3841-64
SR16K4-55C	★ **4085** 3842-4
SR16K8-25C	★ **4086** 3837-45
SR16K8-35C	★ **4086** 3837-50
SR16K8-45C	★ **4086** 3837-57
SR16K8-55C	★ **4086** 3837-77
SR256K1-35C	★ **4092** 3848-2
SR256K1-45C	★ **4092** 3848-3
SR256K1-55C	★ **4092** 3848-6
SR256K4-35C	★ **4093** 3847-65
SR256K4-45C	★ **4093** 3847-69
SR256K4-55C	★ **4093** 3847-70
SR256K8-35C	★ **4094** 3846-35
SR256K8-45C	★ **4094** 3846-37
SR256K8-55C	★ **4094** 3846-38
SR64E4-25C	★ **4088** 3844-97
SR64E4-35	★ **4088** 3844-113
SR64E4-35C	★ **4088** 3844-109
SR64E4-45	★ **4088** 3845-9
SR64E4-45C	★ **4088** 3845-7
SR64E4-55	★ **4088** 3845-38
SR64E4-55C	★ **4088** 3845-36
SR64K1-25C	★ **4089** 3846-89
SR64K1-35	★ **4089** 3846-96
SR64K1-35C	★ **4089** 3846-97
SR64K1-45	★ **4089** 3847-13
SR64K1-45C	★ **4089** 3847-14
SR64K1-55	★ **4089** 3847-32
SR64K1-55C	★ **4089** 3847-33
SR64K4-25C	★ **4087** 3844-95
SR64K4-35	★ **4087** 3844-102
SR64K4-35C	★ **4087** 3844-103
SR64K4-45	★ **4087** 3844-126
SR64K4-45C	★ **4087** 3845-1
SR64K4-55	★ **4087** 3845-32
SR64K4-55C	★ **4087** 3845-33
SR64K8-35C	★ **4090** 3842-117
SR64K8-45C	★ **4090** 3842-125
SR64K8-55C	★ **4090** 3842-133
ispGAL16Z8-15	★ **4668** 4467-2
ispGAL16Z8-15L	★ **4668** 4467-3
ispGAL16Z8-25	★ **4668** 4467-6
ispGAL16Z8-25L	★ **4668** 4467-7
ispGAL16Z8-35	★ **4668** 4467-10
ispGAL16Z8-35L	★ **4668** 4467-11
ispGAL20Z8-15	4467-4
ispGAL20Z8-15L	4467-5
ispGAL20Z8-25	4467-8
ispGAL20Z8-25L	4467-9
ispGAL20Z8-35	4467-12
ispGAL20Z8-35L	4467-13

LMS Electronics

Device	Page-Line
C3008	1469-150
GR2364	★ **4100** 3851-95
GR2516	★ **4100** 3849-65
GR2532	★ **4100** 3850-31
GR27128	★ **4100** 3823-82
GR2716	★ **4100** 3819-93
GR27256	★ **4100** 3824-85
GR2732	★ **4100** 3820-114
GR2764	★ **4100** 3822-79
NVR2	★ **4100** 3812-33 3839-26
NVR8	★ **4100** 3813-76
NVRD64	3813-101
NVRD8	3813-102
NVRD8	3843-82

LSI Computer Systems

Device	Page-Line
Custom	★ **4675**
D3600	834-106
D6	834-99
D60	834-102
LS7030	★ **1099** 890-61
LS7031	★ **1099** 890-58
LS7040	890-52
LS7050	890-55
LS7055	★ **1099** 890-56
LS7056	★ **1099** 890-57
LS7060	★ **1099** 890-63 ¶ 399-1
LS7061	★ **1099** 890-64 ¶ 399-1
LS7062	★ **1099** 890-53
LS7063	★ **1099** 890-54
LS7066	★ **1099** 890-62
LS7100	★ **1099** 2876-1
LS7110	★ **1099** 891-102 ★ **1099** 2831-48
LS7210	★ **1099** 837-133 ★ **1099** 3383-23
LS7220	★ **1099** 3327-128 ¶ 356-3
LS7225	★ **1099** 3327-129
LS7226	★ **1099** 3327-130
LS7228	★ **1099** 3327-131
LS7229	★ **1099** 3327-132
LS7231	★ **1099** 3328-34
LS7232	★ **1099** 3328-35
LS7233	★ **1099** 3328-36
LS7234	★ **1099** 3328-37
LS7235	★ **1099** 3328-38
LS7237	★ **1099** 3328-39
LS7240	890-26
LS7261	★ **1099** 2895-77
LS7262	★ **1099** 3327-143 3400-97
LS7263	★ **1099** 2895-143
LS7264	★ **1099** 3327-144 3400-98
LS7270	★ **1099** 1469-112
RDD104	★ **1099** 816-52 890-108
RED100/120	★ **1099** 834-103 891-37 ★ **1099**
RED300/360	★ **1099** 834-104 891-56
RED3000/3600	★ **1099** 834-105 891-59
RED5/6	★ **1099** 834-98 890-92
RED50/60	★ **1099** 834-101 891-17
RED500/600	★ **1099**

LSI logic

Device	Page-Line
LDS	4460-24
LDS	4483-48
LDS/Apollo W/S	4919-2
LDS/Sun W/S	4920-1
LDS/uVAX W/S	4919-3
LL3020	★ **4676** 4449-38
LL3030	★ **4676** 4449-39
LL3040	★ **4676** 4449-40
LL3060	★ **4676** 4449-42
LL3080	★ **4676** 4449-44
LL3110	★ **4676** 4450-1
LL3130	★ **4676** 4450-2
LL3170	4450-8
LL3210	★ **4676** 4450-9
LL3250	★ **4676** 4450-14
LL3770	★ **4676**
LL5050	4449-41
LL5080	★ **4676** 4449-47
LL5140	★ **4676** 4450-3
LL5170	★ **4676** 4450-7
LL5220	★ **4676** 4450-13
LL5320	★ **4676** 4450-18
LL5420	★ **4676** 4450-19
LL5454	★ **4676**
LL5600	★ **4676** 4450-22
LL7080	★ **4676** 4449-46
LL71000	★ **4676** 4450-28
LL7140	★ **4676** 4450-4
LL7220	★ **4676** 4450-11
LL7320	★ **4676** 4450-16
LL7420	★ **4676** 4450-21
LL7600	★ **4676** 4450-24
LL7840	★ **4676** 4450-26
LL8080	★ **4676** 4449-43
LL8140	★ **4676** 4450-6
LL8220	★ **4676** 4450-12
LL8320	★ **4676** 4450-17
LL9080	4449-45

Arranged alphanumerically from left to right.

LSI logic (Cont'd)

Device	Page-Line
LL91000	★ **4676** 4450-27
LL9140	★ **4676** 4450-5
LL9220	★ **4676** 4450-10
LL9320	★ **4676** 4450-15
LL9420	★ **4676** 4450-20
LL9600	★ **4676** 4450-23
LL9840	★ **4676** 4450-25
LLXXXX	4488-12
LSA2000	★ **4676**
LSA 2000	4480-6
Structured Cell	4480-5

Meta Software

Device	Page-Line
Device Characterization Lab	★ **5112**
HSPICE	4946-3
HSPICE	5056-67
HSPICE	★ **5112**
SUXES	★ **5112**
Suprem 3	★ **5112**

Micro Networks

Device	Page-Line
DAC336	2866-19
DAC71	★ **3204** 2865-36
DAC80	★ **3204** 2864-41
DAC85-CBI	★ **3204** 2862-26
DAC85-CCD	★ **3204** 2870-3
DAC88	★ **3204** 2865-34
DACHK	★ **3204** 2865-11
MN0300A	★ **3205** 3405-1
MN0405	★ **3204** 843-146 ★ **3204** 2849-13
MN050	★ **3205** 3405-2
MN0605	★ **3204** 843-163 ★ **3204** 2850-10
MN0805	★ **3204** 844-27 ★ **3204** 2855-40
MN1435	3345-23
MN2020	★ **3202** 3307-101
MN2200	★ **3202** 3306-101 ¶ 421-9
MN2200H	★ **3202** 3306-102
MN2201	3306-103
MN2201H	3306-104
MN2830	★ **3202**
MN287	★ **3202**
MN2970	★ **3202**
MN3000	★ **3204** 2853-47
MN3000H	★ **3204** 2853-48
MN3001	2853-49
MN3001H	2853-50
MN3002	2853-51
MN3002H	2853-52
MN3003	★ **3204** 2857-35
MN3003H	★ **3204** 2857-36
MN3004	2857-37
MN3004H	2857-38
MN3005	2857-39
MN3005H	2857-40
MN3006	2853-53
MN3006H	2853-54
MN3007	2857-41
MN3007H	2857-42
MN3008	★ **3204** 2853-19
MN3008H	★ **3204** 2853-20
MN3009	2853-21
MN3009H	2853-22
MN3013	★ **3204** 2853-55
MN3013H	★ **3204** 2853-56
MN3014	2853-32
MN3014H	2853-33
MN3020	★ **3204** 2853-36
MN3020H	★ **3204** 2853-37
MN3040	★ **3204** 2857-23
MN3040H	★ **3204** 2857-24
MN3290	★ **3204** 2872-34
MN3336	★ **3204**
MN3348	★ **3204** 2865-28
MN3348H	★ **3204** 2865-29
MN3349	★ **3204** 2865-30
MN3349H	★ **3204** 2865-31
MN3412	★ **3204** 2865-46
MN343	★ **3205** 3404-36
MN343H	★ **3205** 3404-37
MN344	★ **3205** 3404-38
MN344H	★ **3205** 3404-39
MN346	★ **3205** 3404-40
MN346H	★ **3205** 3404-41
MN347	★ **3205** 3404-42
MN347H	★ **3205** 3404-43
MN3660	★ **3204** 2865-35
MN370	★ **3204** 2866-5
MN370H	★ **3204** 2866-6
MN371	2865-50
MN371H	2865-51
MN373	★ **3205** 3405-3
MN374	3405-4
MN375A	★ **3205** 3404-44
MN376	★ **3205** 3405-5
MN377	3405-6
MN379	★ **3205** 3405-7
MN3850	★ **3204** 2865-19
MN3850H	★ **3204** 2865-20
MN3860	★ **3204** 2865-21
MN3860H	★ **3204** 2865-22
MN390	2869-42
MN5065	★ **3203** 2835-22
MN5065H	★ **3203** 2835-23
MN5066	2835-24
MN5066H	2835-25
MN5100	★ **3203** 2833-45
MN5100H	★ **3203** 2833-46
MN5101	2833-37
MN5101H	2833-38
MN5120	★ **3203** 2834-25
MN5120H	★ **3203** 2834-26
MN5121	2834-27
MN5121H	2834-28
MN5122	2834-29
MN5122H	2834-30
MN5123	2834-31
MN5123H	2834-32
MN5130	★ **3203** 2834-14
MN5130H	★ **3203** 2834-15
MN5131	2834-16
MN5131H	2834-17
MN5132	2834-18
MN5132H	2834-19
MN5133	2834-20
MN5133H	2834-21
MN5140	★ **3203** 2834-6
MN5140H	★ **3203** 2834-7
MN5141	2834-8
MN5141H	2834-9
MN5142	2834-10
MN5142H	2834-11
MN5143	2834-12
MN5143H	2834-13
MN5150	★ **3203** 2834-22
MN5200	★ **3203** 2842-34
MN5200H	★ **3203** 2842-35
MN5201	2842-36
MN5201H	2842-37
MN5202	2842-38
MN5202H	2842-39
MN5203	2842-19
MN5203H	2842-20
MN5204	2842-21
MN5204H	2842-22
MN5205	2842-23
MN5205H	2842-24
MN5206	2842-40
MN5206H	2842-41
MN5210	★ **3203** 2841-13
MN5210H	★ **3203** 2841-14
MN5211	2841-15
MN5211H	2841-16
MN5212	2841-17
MN5212H	2841-18
MN5213	2840-42
MN5213H	2840-43
MN5214	2840-44
MN5214H	2840-45
MN5215	2840-46
MN5215H	2840-47
MN5216	2841-19
MN5216H	2841-20
MN5240-10	★ **3203** 2838-20
MN5240-12	★ **3203** 2840-5
MN5243	2839-42
MN5244	2843-17
MN5245A	★ **3203** 2839-33
MN5246	2843-16
MN5247	2839-32
MN5250	★ **3203** 2842-46
MN5250H	★ **3203** 2842-47
MN5251	2842-48
MN5251H	2842-49
MN5252	2842-50
MN5252H	2842-51
MN5253	2842-52
MN5253H	2842-53
MN5260	★ **3203** 2846-28
MN5263	2846-15
MN5280	★ **3203** 2847-29
MN5282	2847-24
MN5284	★ **3203** 2847-17
MN5290	★ **3203** 2847-11
MN5291	2847-12
MN541	★ **3202** 3350-56
MN542	3343-42
MN5420	★ **3203** 2847-33
MN5610	★ **3203** 2840-48
MN565AJ	★ **3204** 2861-55
MN565AK	★ **3204** 2859-81
MN565AS	★ **3204** 2861-56
MN565AT	★ **3204** 2859-82
MN567J	2863-8
MN567K	2861-7
MN567S	2863-9
MN5700	★ **3203** 2842-54
MN574A	★ **3203** 2841-38
MN5815	★ **3203** 2833-32
MN5825	2833-42
MN6227	★ **3203**
MN7100	★ **3202**
MN7120	★ **3202** 3399-11
MN7120H	★ **3202** 3399-12
MN7130	★ **3202**
MN7130	★ **3205** 3404-45 ¶ 387-14
MN7130H	★ **3202**
MN7130H	★ **3205** 3404-46
MN7140	★ **3202** 3399-13
MN7140H	★ **3202** 3399-14
MN7150	★ **3202** 3399-38
MNADC80	★ **3203** 2841-45
MNADC84-10	★ **3203** 2838-26
MNADC84-12	★ **3203** 2840-9
MNADC85-10	★ **3203** 2838-27
MNADC85-12	★ **3203** 2840-10
MNADC87	★ **3203** 2840-11
MNDAC87	2864-42

Micro Power Systems

Device	Page-Line
Analog	4489-11
DAC-01	2849-24
DAC-01B	2849-25
DAC-01C	2849-26
DAC-01D	2849-27
DAC-01F	2849-28
DAC-01H	2849-29
Hall MOS	★ **4678**
MCAD	4925-2
MP0033	★ **3607** 3329-6
MP1010	★ **688** 843-98
MP1010C	★ **688** 855-167
MP108	★ **688**
MP108	★ **3607** 3346-54
MP108A	★ **688**
MP108A	★ **3607** 3342-34
MP1208B	★ **688**
MP1208B	★ **3206** 2867-45
MP1208K	★ **688**
MP1208K	★ **3206** 2867-46
MP1208T	★ **688**
MP1208T	★ **3206** 2867-47
MP1209A	2867-14
MP1209J	2867-15
MP1209S	2867-16
MP1210H	2868-8
MP1210R	2868-9
MP1210Z	2868-10
MP1230B	★ **688**
MP1230B	★ **3206** 2867-48
MP1230K	★ **688**
MP1230K	★ **3206** 2867-49
MP1230T	★ **688**
MP1230T	★ **3206** 2868-1
MP1231A	2867-17
MP1231J	2867-18
MP1231S	2867-19
MP1232H	2867-20
MP1232R	2867-21
MP1232Z	2867-22
MP155	★ **3607** 3351-38
MP155A	★ **3607** 3345-39
MP156	★ **3607** 3351-39
MP156A	★ **3607** 3345-46
MP157	★ **3607** 3351-40
MP157A	★ **3607** 3345-34
MP2004	★ **3607** 3357-31
MP200DIA	★ **3207** 2822-61
MP200DIB	★ **3207** 2822-79
MP200DIC	★ **3207** 2822-80
MP201DIA	★ **3207** 2823-48
MP201DIB	★ **3207** 2823-49
MP208	★ **3607** 3346-55
MP208A	★ **3607** 3342-35
MP2108	★ **688**
MP2108	★ **3607** 3362-51
MP2108A	★ **688**
MP2108A	★ **3607** 3361-32
MP2208	★ **3607** 3362-52
MP2208A	★ **3607** 3361-33
MP2308	★ **3607** 3367-47
MP2308A	★ **3607** 3361-45
MP301	★ **3605** 3309-110
MP302	★ **3207**
MP302	★ **3605** 3309-111
MP302DIA	★ **3207**
MP302DIA	★ **3605** 2826-111
MP302DIC	★ **3207**
MP302DIC	★ **3605** 2826-112
MP303	★ **3207**
MP303	★ **3605** 3309-112
MP303DIA	★ **3207**
MP303DIA	★ **3605** 2825-73
MP303DIC	★ **3207**
MP303DIC	★ **3605** 2825-74
MP308	★ **3607** 3356-8
MP308A	★ **3607** 3342-56
MP310	★ **3605** 3309-113
MP311	★ **3605** 3309-114
MP312	★ **3605** 3309-115
MP313	★ **3605** 3309-116
MP3140B-3	★ **3206** 2871-11
MP3140B-4	★ **3206** 2870-52
MP3140C-3	★ **3206** 2871-12
MP3140C-4	★ **3206** 2870-53
MP318	★ **3605** 3309-102
MP350	★ **3605** 3309-162
MP351	★ **3605** 3309-163
MP352	★ **3605** 3309-164
MP355A	★ **3607** 3346-142
MP356A	★ **3607** 3346-143
MP357A	★ **3607** 3346-144
MP358	★ **3605** 3309-157
MP360	★ **3605** 3309-117
MP361	★ **3605** 3309-118
MP362	★ **3605** 3309-119
MP370B-18	★ **3206** 2873-22
MP370C-18	★ **3206** 2873-23
MP377B-18	★ **3206** 2873-27
MP377C-18	★ **3206** 2873-28
MP3954	★ **3605** 3309-134
MP3954A	★ **3605** 3309-135
MP3955	★ **3605** 3309-136
MP3956	★ **3605** 3309-137
MP3958	★ **3605** 3309-138
MP4136	★ **3607** 3371-56
MP4136C	★ **3607** 3372-51
MP5010	★ **688**
MP5010	★ **3607** 3401-145
MP5010A	★ **688**
MP5010A	★ **3607** 3401-146
MP5071	3322-100
MP5501A	3343-31
MP5501C	3353-9
MP5501E	3346-79
MP5501F	3346-80
MP5501G	3353-10
MP5501H	3343-32
MP5502	3330-22
MP5502	3346-84
MP5502A	3343-7
MP5502B	3353-16
MP5502D	3353-17
MP5502E	3343-8
MP5505A	3332-27
MP5505A	3341-55
MP5505A	3340-13
MP5505B	3342-44
MP5505C	3345-11
MP5505E	3342-48
MP5507A	3341-14
MP5507A	3335-39
MP5507B	3338-37
MP5507C	3357-212
MP5507D	3340-25
MP5507E	3341-15
MP5507E	3338-49
MP5508	3340-77
MP5509A	3369-36

¶ Indicates page number in Application Note Directory.
★ Indicates additional data is provided on the page noted.

Micro Power Systems (Cont'd)

Device	Page-Line
MP5509E	3369-37
MP5510A	3341-64
MP5510B	3341-65
MP5510C	3362-27
MP5510E	3341-66
MP5511A	3369-38
MP5511E	3369-39
MP5520A	★ 688
MP5520A	★ 3206
	2849-30
MP5520B	★ 688
MP5520B	★ 3206
	2849-31
MP5520C	★ 688
MP5520C	★ 3206
	2849-32
MP5520D	★ 688
MP5520D	★ 3206
	2850-1
MP5520F	★ 688
MP5520F	★ 3206
	2849-33
MP5520H	★ 688
MP5520H	★ 3206
	2849-34
MP5527	3335-26
MP5537	3335-27
MP5540	3402-52
MP562H	★ 688
MP562H	★ 3206
	2864-10
MP562J	★ 688
MP562J	★ 3206
	2864-11
MP562K	★ 688
MP562K	★ 3206
	2864-12
MP574J	★ 3206
	2844-43
MP574K	★ 3206
	2845-33
MP574L	★ 3206
	2845-34
MP574S	★ 3206
	2844-44
MP574T	★ 3206
	2845-35
MP574U	★ 3206
	2845-36
MP5905	★ 3605
	3309-139
MP5906	★ 3605
	3309-140
MP5907	★ 3605
	3309-141
MP5908	★ 3605
	3309-142
MP5909	★ 3605
	3309-143
MP5911	★ 3605
	3309-144
MP5912	★ 3605
	3309-145
MP5912C	★ 3605
	3309-146
MP7138	★ 3206
	2848-17
MP7138A	★ 3206
	2848-18
MP7223	3379-116
MP7501J	★ 3207
	2830-157
MP7501K	★ 3207
	2830-158
MP7501S	★ 3207
	2830-103
MP7502J	★ 3207
	2830-50
MP7502K	★ 3207
	2830-51
MP7502S	★ 3207
	2829-34
MP7503J	★ 3207
	2830-159
MP7503K	★ 3207
	2830-160
MP7503S	★ 3207
	2830-104
MP7506J	★ 3207
	2831-70
MP7506K	★ 3207
	2831-71
MP7506S	★ 3207
	2831-54
MP7507J	★ 3207
	2831-6
MP7507K	★ 3207
	2831-7
MP7507S	★ 3207
	2830-200
MP7508K	★ 3207
	2830-161
MP7508S	★ 3207
	2830-105
MP7509K	★ 3207
	2830-52
MP7509S	★ 3207
	2829-35
MP7510DIJ	★ 3207
	2823-78
MP7510DIK	★ 3207
	2823-79
MP7510DIS	★ 3207
	2823-80
MP7511DIJ	★ 3207
	2823-81
MP7511DIK	★ 3207
	2823-82
MP7511DIS	★ 3207
	2823-83
MP7511DIT	★ 3207
	2823-84
MP7512DIJ	★ 3207
	2825-104
MP7512DIK	★ 3207
	2825-105
MP7512DIS	★ 3207
	2825-106
MP7512DIT	★ 3207
	2825-107
MP7520J	★ 688
MP7520J	★ 3206
	2859-23
MP7520K	★ 688
MP7520K	★ 3206
	2858-37
MP7520L	★ 688
MP7520L	★ 3206
	2857-2
MP7520Q	★ 688
MP7520Q	★ 3206
	2858-29
MP7520R	★ 688
MP7520R	★ 3206
	2858-14
MP7520S	★ 688
MP7520S	★ 3206
	2859-24
MP7520T	★ 688
MP7520T	★ 3206
	2858-38
MP7520U	★ 688
MP7520U	★ 3206
	2857-3
MP7520W	★ 688
MP7520W	★ 3206
	2858-30
MP7520Y	★ 688
MP7520Y	★ 3206
	2858-15
MP7521J	★ 688
MP7521J	★ 3206
	2869-29
MP7521K	★ 688
MP7521K	★ 3206
	2869-16
MP7521L	★ 688
MP7521L	★ 3206
	2868-32
MP7521S	★ 688
MP7521S	★ 3206
	2869-30
MP7521T	★ 688
MP7521T	★ 3206
	2869-17
MP7521U	★ 688
MP7521U	★ 3206
	2868-33
MP7522J	★ 688
MP7522J	★ 3206
	2859-25
MP7522K	★ 688
MP7522K	★ 3206
	2858-39
MP7522L	★ 688
MP7522L	★ 3206
	2857-5
MP7522S	★ 688
MP7522S	★ 3206
	2859-26
MP7522T	★ 688
MP7522T	★ 3206
	2858-47
MP7522U	★ 688
MP7522U	★ 3206
	2857-6
MP7523J	★ 688
MP7523J	★ 3206
	2852-17
MP7523K	★ 688
MP7523K	★ 3206
	2851-11
MP7523L	★ 688
MP7523L	★ 3206
	2850-21
MP7524A	★ 688
MP7524A	★ 3206
	2852-1
MP7524B	★ 688
MP7524B	★ 3206
	2851-15
MP7524C	★ 688
MP7524C	★ 3206
	2850-35
MP7524J	★ 688
MP7524J	★ 3206
	2852-2
MP7524K	★ 688
MP7524K	★ 3206
	2851-18
MP7524L	★ 688
MP7524L	★ 3206
	2850-19
MP7524S	★ 688
MP7524S	★ 3206
	2852-3
MP7524T	★ 688
MP7524T	★ 3206
	2851-19
MP7524U	★ 688
MP7524U	★ 3206
	2850-20
MP7528XA	★ 688
MP7528XA	★ 3206
	2854-25
MP7528XB	★ 688
MP7528XB	★ 3206
	2851-46
MP7528XC	★ 688
MP7528XC	★ 3206
	2850-41
MP7528XJ	★ 688
MP7528XJ	★ 3206
	2854-26
MP7528XK	★ 688
MP7528XK	★ 3206
	2851-47
MP7528XL	★ 688
MP7528XL	★ 3206
	2850-42
MP7528XQ	★ 688
MP7528XQ	★ 3206
	2850-18
MP7528XS	★ 688
MP7528XS	★ 3206
	2854-27
MP7528XT	★ 688
MP7528XT	★ 3206
	2851-48
MP7528XU	★ 688
MP7528XU	★ 3206
	2850-43
MP7530	★ 688
MP7530	★ 3206
	2857-4
MP7530J	★ 688
MP7530J	★ 3206
	2859-27
MP7530K	★ 688
MP7530K	★ 3206
	2858-40
MP7531J	★ 688
MP7531J	★ 3206
	2869-31
MP7531K	★ 688
MP7531K	★ 3206
	2869-18
MP7531L	★ 688
MP7531L	★ 3206
	2868-34
MP7533K	★ 688
MP7533K	★ 3206
	2859-4
MP7533L	★ 688
MP7533L	★ 3206
	2857-16
MP7533Q	★ 688
MP7533Q	★ 3206
	2856-27
MP7533R	★ 688
MP7533R	★ 3206
	2856-17
MP7533S	★ 688
MP7533S	★ 3206
	2859-39
MP7533T	★ 688
MP7533T	★ 3206
	2859-40
	2859-41
MP7533U	★ 688
MP7533U	★ 3206
	2857-17
MP7533W	★ 688
MP7533W	★ 3206
	2856-28
MP7533Y	★ 688
MP7533Y	★ 3206
	2856-18
MP7541A	★ 688
MP7541A	★ 3206
	2866-26
MP7541B	★ 688
MP7541B	★ 3206
	2863-16
MP7541J	★ 688
MP7541J	★ 3206
	2866-27
MP7541K	★ 688
MP7541K	★ 3206
	2863-17
MP7541S	★ 688
MP7541S	★ 3206
	2866-28
MP7541T	★ 688
MP7541T	★ 3206
	2863-15
MP7542A	★ 688
MP7542A	★ 3206
	2867-9
MP7542B	★ 688
MP7542B	★ 3206
	2868-2
MP7542J	★ 688
MP7542J	★ 3206
	2867-10
MP7542K	★ 688
MP7542K	★ 3206
	2868-3
MP7542T	★ 688
MP7542T	★ 3206
	2868-4
MP7543A	★ 688
MP7543A	★ 3206
	2867-11
MP7543B	★ 688
MP7543B	★ 3206
	2868-5
MP7543J	★ 688
MP7543J	★ 3206
	2867-12
MP7543K	★ 688
MP7543K	★ 3206
	2868-6
MP7543S	★ 688
MP7543S	★ 3206
	2867-13
MP7543T	★ 688
MP7543T	★ 3206
	2868-7
MP7545	★ 688
MP7545	★ 3206
	2864-2
MP7550B	★ 3206
	2846-17
MP7570J	★ 3206
	2835-3
MP7570L	★ 3206
	2838-45
MP7574A	★ 688
MP7574A	★ 3206
	2836-1
MP7574B	★ 688
MP7574B	★ 3206
	2835-45
MP7574J	★ 688
MP7574J	★ 3206
	2836-2
MP7574K	★ 688
MP7574K	★ 3206
	2835-46
MP7574S	★ 688
MP7574S	★ 3206
	2836-4
MP7574T	★ 688
MP7574T	★ 3206
	2835-47
MP7581A	★ 688
MP7581A	★ 3206
	3399-23
MP7581B	★ 688
MP7581B	★ 3206
	3399-24
MP7581C	★ 688
MP7581C	★ 3206
	3399-25
MP7581J	★ 688
MP7581J	★ 3206
	3399-26
MP7581K	★ 688
MP7581K	★ 3206
	3399-27
MP7581L	★ 688
MP7581L	★ 3206
	3399-28
MP7581S	★ 688
MP7581S	★ 3206
	3399-29
MP7581T	★ 688
MP7581T	★ 3206
	3399-30
MP7581U	★ 688
MP7581U	★ 3206
	3399-31
MP7614J	★ 688
MP7614J	★ 3206
	2871-16
MP7614K	★ 688
MP7614K	★ 3206
	2871-13
MP7614S	★ 688
MP7614S	★ 3206
	2871-17
MP7614T	★ 688
MP7614T	★ 3206
	2871-14
MP7616J	★ 688
MP7616J	★ 3206
	2873-3
MP7616K	★ 688
MP7616K	★ 3206
	2873-10
MP7616L	★ 688
MP7616L	★ 3206
	2873-4
MP7616S	★ 688
MP7616S	★ 3206
	2873-5
MP7616T	★ 688
MP7616T	★ 3206
	2872-9
MP7621A	★ 688
MP7621A	★ 3206
	2866-33
MP7621B	★ 688
MP7621B	★ 3206
	2863-24
MP7621J	★ 688
MP7621J	★ 3206
	2866-34
MP7621K	★ 688
MP7621K	★ 3206
	2863-25
MP7621S	★ 688
MP7621S	★ 3206
	2866-35
MP7621T	★ 688
MP7621T	★ 3206
	2863-26
MP7621Z	★ 688
MP7621Z	★ 3206
	2868-40
MP7622A	★ 688
MP7622A	★ 3206
	2866-47
MP7622B	★ 688
MP7622B	★ 3206
	2864-3
MP7622H	★ 688
MP7622H	★ 3206
	2868-35
MP7622J	★ 688
MP7622J	★ 3206
	2866-48
MP7622K	★ 688
MP7622K	★ 3206
	2864-1
MP7622R	★ 688
MP7622R	★ 3206
	2868-36
MP7622S	★ 688
MP7622S	★ 3206
	2866-49
MP7622T	★ 688
MP7622T	★ 3206
	2864-7
MP7622Z	★ 688
MP7622Z	★ 3206
	2868-37
MP7623A	★ 688
MP7623A	★ 3206
	2866-36
MP7623B	★ 688
MP7623B	★ 3206
	2863-27
MP7623J	★ 688
MP7623J	★ 3206
	2866-37
MP7623K	★ 688
MP7623K	★ 3206
	2863-42
MP7623S	★ 688
MP7623S	★ 3206
	2866-38
MP7623T	★ 688
MP7623T	★ 3206
	2863-43
MP7628J	★ 688
MP7628J	★ 3206
	2853-9
MP7628K	★ 688
MP7628K	★ 3206
	2851-31
MP7628L	★ 688
MP7628L	★ 3206
	2850-32
MP7628S	★ 688
MP7628S	★ 3206
	2853-10
MP7628T	★ 688
MP7628T	★ 3206
	2851-32
MP7628U	★ 688
MP7628U	★ 3206
	2850-33
MP7633	★ 688
MP7633	★ 3206
	2858-16
MP7636	★ 3206
MP7682XA	★ 688
MP7682XA	★ 3208
	2832-41
MP7682XB	★ 688
MP7682XB	★ 3208
	2832-28
MP7682XC	★ 688
MP7682XC	★ 3208
	2832-18
MP7682XJ	★ 688
MP7682XJ	★ 3208
	2832-42

Arranged alphanumerically from left to right.

ADVERTISERS' PRODUCT INDEX

Micro Power Systems (Cont'd)

Device	Page-Line
MP7682XK	★ 688
MP7682XK	★ 3208
	2832-29
MP7682XL	★ 688
MP7682XL	★ 3208
	2832-19
MP7682XS	★ 688
MP7682XS	★ 3208
	2832-43
MP7682XT	★ 688
MP7682XT	★ 3208
	2832-30
MP7682XU	★ 688
MP7682XU	★ 3208
	2832-20
MP7682YA	★ 688
MP7682YA	★ 3208
	2832-38
MP7682YB	★ 688
MP7682YB	★ 3208
	2832-24
MP7682YJ	★ 688
MP7682YJ	★ 3208
	2832-39
MP7682YK	★ 688
MP7682YK	★ 3208
	2832-25
MP7682ZJ	★ 688
MP7682ZJ	★ 3208
	2832-40
MP7683XA	★ 688
MP7683XA	★ 3208
	2836-26
MP7683XB	★ 688
MP7683XB	★ 3208
	2833-26
MP7683XC	★ 688
MP7683XC	★ 3208
	2833-13
MP7683XJ	★ 688
MP7683XJ	★ 3208
	2836-27
MP7683XK	★ 688
MP7683XK	★ 3208
	2833-27
MP7683XL	★ 688
MP7683XL	★ 3208
	2833-14
MP7683XS	★ 688
MP7683XS	★ 3208
	2836-28
MP7683XT	★ 688
MP7683XT	★ 3208
	2833-28
MP7683YJN	★ 688
MP7683YJN	★ 3208
	2836-24
MP7684	★ 688
MP7684	★ 3208
	2836-7
MP7684K	★ 688
MP7684K	★ 3208
	2836-8
MP7684L	★ 688
MP7684L	★ 3208
	2836-22
MP7684Q	★ 688
MP7684Q	★ 3208
	2836-5
MP7684S	★ 688
MP7684S	★ 3208
	2836-25
MP7684T	★ 688
MP7684T	★ 3208
	2836-9
MP7684U	★ 688
MP7684U	★ 3208
	2836-23
MP7684V	★ 688
MP7684V	★ 3208
	2836-6
MP7685	★ 3208
MP830	★ 3605
	3309-147
MP831	★ 3605
	3309-148
MP832	★ 3605
	3309-149
MP833	★ 3605
	3309-150
MP840	★ 3605
	3309-151
MP841	★ 3605
	3309-152
MP842	★ 3605
	3309-153
MP843	★ 3605
	3309-154
MP844	★ 3605
	3309-155
MP845	★ 3605
	3309-156
MP9331-4	★ 3206
	2872-13
MP9331-5	★ 3206
	2871-38
MP9331-6	★ 3206
	2871-28
MP9377-16-4	★ 3206
	2872-38
MP9377-16-5	★ 3206
	2871-41
MP9377-16-6	★ 3206
	2871-44
MPINA101A	3337-49
MPINA101S	3340-62
MPOP-01	★ 688
MPOP-01	★ 3607
	3346-81
MPOP-01A	★ 688
MPOP-01A	★ 3607
	3343-33
MPOP-01C	★ 688
MPOP-01C	★ 3607
	3353-11
MPOP-01E	★ 688
MPOP-01E	★ 3607
	3346-82
MPOP-01F	★ 688
MPOP-01F	★ 3607
	3346-83
MPOP-01G	★ 688
MPOP-01G	★ 3607
	3353-12
MPOP-01H	★ 688
MPOP-01H	★ 3607
	3343-34
MPOP-02	★ 688
MPOP-02	★ 3607
	3346-85
MPOP-02A	★ 688
MPOP-02A	★ 3607
	3343-9
MPOP-02B	★ 688
MPOP-02B	★ 3607
	3353-18
MPOP-02C	★ 688
MPOP-02C	★ 3607
	3346-86
MPOP-02D	★ 688
MPOP-02D	★ 3607
	3353-19
MPOP-02E	★ 688
MPOP-02E	★ 3607
	3343-10
MPOP-03	★ 688
MPOP-03	★ 3607
	3363-12
MPOP-03A	★ 688
MPOP-03A	★ 3607
	3362-14
MPOP-03B	★ 688
MPOP-03B	★ 3607
	3365-27
MPOP-03C	★ 688
MPOP-03C	★ 3607
	3363-13
MPOP-03D	★ 688
MPOP-03D	★ 3607
	3365-28
MPOP-03E	★ 688
MPOP-03E	★ 3607
	3362-9
MPOP-04	★ 688
MPOP-04	★ 3607
	3363-9
MPOP-04A	★ 688
MPOP-04A	★ 3607
	3362-10
MPOP-04B	★ 688
MPOP-04B	★ 3607
	3365-23
MPOP-04C	★ 688
MPOP-04C	★ 3607
	3363-10
MPOP-04D	★ 688
MPOP-04D	★ 3607
	3365-24
MPOP-04E	★ 688
MPOP-04E	★ 3607
	3362-11
MPOP-05	★ 688
MPOP-05	★ 3607
	3342-45
MPOP-05A	★ 688
MPOP-05A	★ 3607
	3340-12
MPOP-05C	★ 688
MPOP-05C	★ 3607
	3345-12
MPOP-05E	★ 688
MPOP-05E	★ 3607
	3342-49
MPOP-07	★ 688
MPOP-07	★ 3607
	3338-38
MPOP-07A	★ 688
MPOP-07A	★ 3607
	3335-40
MPOP-07C	★ 688
MPOP-07C	★ 3607
	3340-20
MPOP-07D	★ 688
MPOP-07D	★ 3607
	3340-23
MPOP-07E	★ 688
MPOP-07E	★ 3607
	3338-46
MPOP-08A	★ 688
MPOP-08A	★ 3607
	3340-9
MPOP-08B	★ 688
MPOP-08B	★ 3607
	3340-70
MPOP-08C	★ 688
MPOP-08C	★ 3607
	3344-50
MPOP-08E	★ 688
MPOP-08E	★ 3607
	3340-10
MPOP-08F	★ 688
MPOP-08F	★ 3607
	3340-71
MPOP-08G	★ 688
MPOP-08G	★ 3607
	3344-51
MPOP-09A	★ 688
MPOP-09A	★ 3607
	3369-40
MPOP-09B	★ 688
MPOP-09B	★ 3607
	3370-27
MPOP-09E	★ 688
MPOP-09E	★ 3607
	3369-41
MPOP-09F	★ 688
MPOP-09F	★ 3607
	3370-28
MPOP-10	★ 688
MPOP-10	★ 3607
	3361-39
MPOP-10A	★ 688
MPOP-10A	★ 3607
	3361-40
MPOP-10C	★ 688
MPOP-10C	★ 3607
	3362-28
MPOP-10E	★ 688
MPOP-10E	★ 3607
	3361-41
MPOP-11	★ 688
MPOP-11	★ 3607
	3369-42
MPOP-11A	★ 688
MPOP-11A	★ 3607
	3369-43
MPOP-11B	★ 688
MPOP-11B	★ 3607
	3370-29
MPOP-11E	★ 688
MPOP-11E	★ 3607
	3369-44
MPOP-11F	★ 688
MPOP-11F	★ 3607
	3370-30
MPOP-12A	★ 688
MPOP-12A	★ 3607
	3357-209
MPOP-12B	★ 688
MPOP-12B	★ 3607
	3361-14
MPOP-12C	★ 688
MPOP-12C	★ 3607
	3357-201
MPOP-12E	★ 688
MPOP-12E	★ 3607
	3357-210
MPOP-12F	★ 688
MPOP-12F	★ 3607
	3361-15
MPOP-12G	★ 688
MPOP-12G	★ 3607
	3357-202
MPOP-14	★ 688
MPOP-14	★ 3607
	3363-8
MPOP-14A	★ 688
MPOP-14A	★ 3607
	3362-12
MPOP-14B	★ 688
MPOP-14B	★ 3607
	3365-25
MPOP-14C	★ 688
MPOP-14C	★ 3607
	3363-11
MPOP-14D	★ 688
MPOP-14D	★ 3607
	3365-26
MPOP-14E	★ 688
MPOP-14E	★ 3607
	3362-13
MPOP-207A	★ 688
MPOP-207A	★ 3607
	3357-197
MPOP-207B	★ 688
MPOP-207B	★ 3607
	3361-16
MPOP-207E	★ 688
MPOP-207E	★ 3607
	3357-198
MPOP-207F	★ 688
MPOP-207F	★ 3607
	3361-17
MPOP-227A	★ 688
MPOP-227A	★ 3607
	3357-192
MPOP-227B	★ 688
MPOP-227B	★ 3607
	3357-205
MPOP-227C	★ 688
MPOP-227C	★ 3607
	3361-5
MPOP-227D	★ 688
MPOP-227D	★ 3607
	3361-6
MPOP-227E	★ 688
MPOP-227E	★ 3607
	3357-193
MPOP-227F	★ 688
MPOP-227F	★ 3607
	3357-206
MPOP-227G	★ 688
MPOP-227G	★ 3607
	3357-196
MPOP-27	★ 688
MPOP-27	★ 3607
	3339-9
MPOP-27A	★ 688
MPOP-27A	★ 3607
	3337-15
MPOP-27B	★ 688
MPOP-27B	★ 3607
	3338-8
MPOP-27C	★ 688
MPOP-27C	★ 3607
	3339-36
MPOP-27E	★ 688
MPOP-27E	★ 3607
	3337-16
MPOP-27F	★ 688
MPOP-27F	★ 3607
	3338-9
MPOP-27G	★ 688
MPOP-27G	★ 3607
	3339-37
MPOP-37	★ 688
MPOP-37	★ 3607
	3339-16
MPOP-37A	★ 688
MPOP-37A	★ 3607
	3337-25
MPOP-37B	★ 688
MPOP-37B	★ 3607
	3338-22
MPOP-37C	★ 688
MPOP-37C	★ 3607
	3339-46
MPOP-37E	★ 688
MPOP-37E	★ 3607
	3337-26
MPOP-37F	★ 688
MPOP-37F	★ 3607
	3338-23
MPOP-37G	★ 688
MPOP-37G	★ 3607
	3339-47
MPREF-01	★ 688
MPREF-01	★ 3607
	3403-39
MPREF-02	★ 688
MPREF-02	★ 3607
	3402-100
MPREF-02A	3402-101
MPREF-02C	3402-102
MPREF-02D	3402-103
MPREF-02F	3402-104
MPREF-02H	3402-105
MPREF-05	★ 688
	3402-106
MPREF-10	★ 688
MPREF-10	★ 3607
	3403-40
MPT-01A	★ 3605
	3309-124
MPT-01G	★ 3605
	3309-125
MPT-02A	★ 3605
	3309-126
MPT-02B	★ 3605
	3309-127
MPT-02E	★ 3605
	3309-128
MPT-02F	★ 3605
	3309-129
MPVFC32B	3405-104
MPVFC32K	3405-105
MPVFC32S	3405-106
OP-07E	3338-50
System-on-a-chip	★ 4678

Micro-Rel

Device	Page-Line
Custom	★ 4680
D3 Library	4480-18
D5 Library	4480-19
High Volt	4480-14
High Voltage	4480-15
Low Volt	4480-16
Low Voltage	4480-17

Monolithic Memories, Inc.

Device	Page-Line
10HPAL20P8C	★ 4682
10HPAL20P8C	★ 4711
	4469-50
16R6	★ 4689
5086	★ 1103
	877-88
5087	★ 1103
	877-89
53D1641	★ 4101
	3819-108
53DA1643	★ 4101
	3819-109
53DA441	★ 4101
	3816-79
53DA442	★ 4101
	3816-80
53DA841	★ 4101
	3817-165
53RA1681	★ 691
53RA1681	★ 4101
	3818-74
53RA1681A	★ 691
53RA1681A	★ 4101
	3818-64
53RA481	★ 4101
	3815-80
53RA481A	★ 4101
	3815-75
53RS1681	★ 691
53RS1681	★ 4101
	3818-75
53RS1681A	★ 691
53RS1681A	★ 4101
	3818-65
53RS881	★ 4101
	3817-63
53RS881A	★ 4101
	3817-60
53S080	★ 4101
	3814-32
53S081	★ 4101
	3814-36
53S140	★ 4101
	3814-109
53S141	★ 4101
	3814-110
53S141A	★ 4101
	3814-91
53S1641	★ 4101
	3820-24
53S1641A	★ 4101
	3820-12
53S1681	★ 4101
	3819-47
53S1681A	★ 4101
	3819-16
53S240	★ 4101
	3815-47
53S241	★ 4101
	3815-51
53S241A	★ 4101
	3815-34
53S280	★ 4101
	3815-14
53S281	★ 4101
	3815-15
53S281A	★ 4101
	3815-8
53S3281	★ 691
53S3281	★ 4101
	3820-50
53S3281A	★ 691
53S3281A	★ 4101
	3820-44
53S440	★ 4101
	3817-18
53S441	★ 4101
	3817-21
53S441A	★ 4101
	3817-12
53S480	★ 4101
	3816-17
53S481	★ 4101
	3816-18
53S481A	★ 4101
	3815-107
53S485	3816-22
53S6481	3821-64
53S6481A	3821-39
53S841	★ 4101
	3818-33
53S841A	★ 4101
	3818-22
53S881	3817-111
53S881A	3817-93
53SDA441	★ 4101
53SDA442	★ 4101
54ACT547	829-91
54ACT567	829-92
54ACT646	★ 1112
	840-148
54ACT648	★ 1112
	840-101
54ACT651	★ 1113
	840-102
54ACT652	★ 1113
	840-149
54ACT793	829-93
54ACT794	842-29
54S730	1449-66

¶ Indicates page number in Application Note Directory.
★ Indicates additional data is provided on the page noted.

Monolithic Memories, Inc. (Cont'd)

Device	Page-Line
54S734	1449-67
57401	**★ 691**
	3809-51
57401A	**★ 691**
	3809-63
57402	**★ 691**
	3809-92
57402A	**★ 691**
	3809-96
57411A	**★ 691**
	3809-85
57412A	**★ 691**
	3809-116
57413A	**★ 691**
57413A	**★ 1116**
	3809-113
57558	843-32
57558-1	855-153
6086	**★ 1103**
	877-90
6087	**★ 1103**
	877-91
6300	**★ 4102**
6301	**★ 4102**
6305	**★ 4102**
6306	**★ 4102**
6308	**★ 4102**
6309	**★ 4102**
6330	**★ 4102**
6331	**★ 4102**
6336	**★ 4102**
6341	**★ 4102**
6348	**★ 4102**
6349	**★ 4102**
6352	**★ 4102**
6353	**★ 4102**
6381	**★ 4102**
6389	**★ 4102**
63D1641	**★ 4101**
63D1641	**★ 4103**
63D1641	**★ 4109**
	3819-104
63DA1643	**★ 4101**
63DA1643	**★ 4103**
	3819-105
63DA441	**★ 4101**
63DA441	**★ 4103**
	3816-77
63DA442	**★ 4101**
63DA442	**★ 4103**
	3816-78
63DA841	**★ 4101**
63DA841	**★ 4103**
	3817-164
63RA1681	**★ 4101**
63RA1681	**★ 4103**
63RA1681	**★ 4107**
	3818-66
63RA1681A	**★ 4101**
63RA1681A	**★ 4103**
63RA1681A	**★ 4107**
	3818-60
63RA481	**★ 4101**
	3815-76
63RA481A	**★ 4101**
	3815-72
63RS1681	**★ 4101**
	3818-67
63RS1681A	**★ 4101**
	3818-61
63RS881	**★ 4101**
63RS881	**★ 4103**
	3817-61
63RS881A	**★ 4101**
63RS881A	**★ 4103**
	3817-59
63S080	**★ 4101**
63S080	**★ 4102**
	3814-17
63S081	**★ 4101**
63S081	**★ 4102**
	3814-20
63S081A	**★ 4101**
63S081A	**★ 4102**
	3814-8
63S140	**★ 4101**
63S140	**★ 4102**
	3814-97
63S141	**★ 4101**
63S141	**★ 4102**
	3814-100
63S141A	**★ 4101**
63S141A	**★ 4102**
	3814-82
63S1641	**★ 4101**
63S1641	**★ 4103**
	3820-13
63S1641A	**★ 4101**
63S1641A	**★ 4103**
	3819-120
63S1681	**★ 4101**
63S1681	**★ 4103**
	3819-17
63S1681A	**★ 4101**
63S1681A	**★ 4103**
	3818-96
63S240	**★ 4101**
63S240	**★ 4102**
	3815-32
63S241	**★ 4101**
63S241	**★ 4102**
	3815-35
63S241A	**★ 4101**
63S241A	**★ 4102**
	3815-26
63S280	**★ 4101**
63S280	**★ 4102**
	3815-10
63S281	**★ 4101**
63S281	**★ 4102**
	3815-12
63S281A	**★ 4101**
63S281A	**★ 4102**
	3815-5
63S285	3815-13
63S3281	**★ 4101**
63S3281	**★ 4103**
	3820-45
63S3281A	**★ 4101**
63S3281A	**★ 4103**
	3820-33
63S440	**★ 4101**
63S440	**★ 4102**
	3816-103
63S441	**★ 4101**
63S441	**★ 4102**
	3817-5
63S441A	**★ 4101**
63S441A	**★ 4102**
	3816-94
63S480	**★ 4101**
63S480	**★ 4102**
	3816-1
63S481	**★ 4101**
63S481	**★ 4102**
	3816-8
63S481A	**★ 4101**
63S481A	**★ 4102**
	3815-86
63S485	3816-15
63S485	**★ 4102**
63S6481	3821-40
63S6481A	3821-41
63S841	**★ 4101**
63S841	**★ 4102**
	3818-23
63S841A	**★ 4101**
63S841A	**★ 4102**
	3818-9
63S881	**★ 4101**
63S881	**★ 4102**
	3817-94
63S881A	**★ 4101**
63S881A	**★ 4102**
	3817-67
63SDA441	**★ 4101**
63SDA442	**★ 4101**
67401	3809-64
67401A	3809-76
67401B	3809-80
67402	3809-97
67402A	3809-105
67402B	3809-109
67411A	**★ 1101**
	3809-86
67412A	**★ 1101**
	3809-118
67413A	**★ 1101**
67413A	**★ 1116**
	3809-117
67417	**★ 1117**
	3809-119
674219	**★ 1118**
	3809-121
67L401	**★ 1101**
	3809-50
67L402	**★ 1101**
	3809-91
74ACT547	829-94
74ACT567	829-95
74ACT646	**★ 1107**
	840-178
74ACT648	**★ 1107**
74ACT648	**★ 1112**
	840-103
74ACT651	**★ 1107**
74ACT651	**★ 1113**
	840-104
74ACT652	**★ 1107**
74ACT652	**★ 1113**
	840-150
74ACT793	829-96
74ACT794	842-30
C57401	**★ 1115**
	3809-52
C57401A	**★ 1115**
	3809-65
C57402	**★ 1115**
	3809-93
C57402A	**★ 1115**
	3809-98
C67401	**★ 1101**
C67401	**★ 1115**
	3809-66
C67401A	**★ 1101**
C67401A	**★ 1115**
	3809-77
C67401B	**★ 1101**
C67401B	**★ 1115**
	3809-81
C67402	**★ 1101**
C67402	**★ 1115**
	3809-99
C67402A	**★ 1101**
C67402A	**★ 1115**
	3809-106
C67402B	**★ 1101**
C67402B	**★ 1115**
	3809-110
C67417	**★ 1101**
C674219	**★ 1101**
C67L401	**★ 1101**
	3809-82
C67L402	**★ 1101**
	3809-111
C67L403	**★ 1101**
	3809-112
HAL10H8-2C	4476-9
HAL10H8-2M	4476-22
HAL10H8C	4475-37
HAL10H8M	4475-117
HAL10L8-2C	4476-10
HAL10L8-2M	4476-23
HAL10L8C	4475-38
HAL10L8M	4475-118
HAL12H6-2C	4476-11
HAL12H6-2M	4476-24
HAL12H6C	4475-39
HAL12H6M	4475-119
HAL12L10C	4475-97
HAL12L10M	4475-120
HAL12L6-2C	4476-12
HAL12L6-2M	4476-25
HAL12L6C	4475-40
HAL12L6M	4475-121
HAL14H4-2C	4476-13
HAL14H4-2M	4476-26
HAL14H4C	4475-41
HAL14H4M	4475-122
HAL14L4-2C	4476-14
HAL14L4-2M	4476-27
HAL14L4C	4475-42
HAL14L4M	4475-123
HAL14L8C	4475-98
HAL14L8M	4475-124
HAL16A4C	4475-99
HAL16A4M	4475-125
HAL16C1-2C	4476-15
HAL16C1-2M	4476-28
HAL16C1C	4475-100
HAL16C1M	4475-126
HAL16H2-2C	4476-16
HAL16H2-2M	4476-29
HAL16H2C	4475-43
HAL16H2M	4475-127
HAL16L2-2C	4476-17
HAL16L2-2M	4476-30
HAL16L2C	4475-44
HAL16L2M	4475-128
HAL16L6C	4475-101
HAL16L6M	4475-129
HAL16L8A-2C	4475-45
HAL16L8AC	4475-14
HAL16L8AM	4475-25
HAL16L8B-2C	4475-15
HAL16L8B-4C	4475-46
HAL16L8BC	4475-6
HAL16L8M	4475-130
HAL16P8A	4475-102
HAL16PR4A	4475-103
HAL16R4A-2C	4475-47
HAL16R4AC	4475-16
HAL16R4AM	4475-26
HAL16R4B-2C	4475-17
HAL16R4B-4C	4475-48
HAL16R4BC	4475-7
HAL16R4M	4475-131
HAL16R6A-2C	4475-49
HAL16R6AC	4475-18
HAL16R6AM	4475-27
HAL16R6B-2C	4475-19
HAL16R6B-4C	4475-50
HAL16R6BC	4475-8
HAL16R6M	4475-132
HAL16R8A-2C	4475-51
HAL16R8AC	4475-20
HAL16R8AM	4475-28
HAL16R8B-4C	4475-52
HAL16R8BC	4475-9
HAL16R8M	4476-1
HAL16RA8C	4475-104
HAL16RP6A	4475-105
HAL16RP8A	4475-106
HAL16X4C	4475-107
HAL16X4M	4476-2
HAL18L4C	4475-108
HAL18L4M	4476-3
HAL20C1C	4475-109
HAL20L10AC	4475-29
HAL20L10C	4476-5
HAL20L10M	4476-18
HAL20L2C	4475-110
HAL20L2M	4476-4
HAL20L8AC	4475-21
HAL20L8AM	4475-30
HAL20L8BC	4475-10
HAL20R4AC	4475-22
HAL20R4AM	4475-31
HAL20R4BC	4475-11
HAL20R6AC	4475-23
HAL20R6AM	4475-32
HAL20R6BC	4475-12
HAL20R8AC	4475-24
HAL20R8AM	4475-33
HAL20R8BC	4475-13
HAL20RA10	4475-111
HAL20RS10	4475-112
HAL20RS4	4475-113
HAL20RS8	4475-114
HAL20S10	4475-115
HAL20X10AC	4475-34
HAL20X10C	4476-6
HAL20X10M	4476-19
HAL20X4AC	4475-35
HAL20X4C	4476-7
HAL20X4M	4476-20
HAL20X8AC	4475-36
HAL20X8C	4476-8
HAL20X8M	4476-21
HAL32R16C	4476-35
HAL32R16M	4476-36
HAL64R32C	4476-37
HAL64R32M	4476-38
HD6600	887-142
HD6605	887-143
JM38520	**★ 692**
MC10H016	**★ 1105**
	845-47
MC10H100	**★ 1105**
	846-68
MC10H101	**★ 1105**
	846-94
MC10H102	**★ 1105**
	846-61
MC10H103	**★ 1105**
	846-27
MC10H104	**★ 1105**
	846-6
MC10H105	**★ 1105**
	846-85
MC10H106	**★ 1105**
	846-53
MC10H107	**★ 1105**
	846-140
MC10H109	**★ 1105**
	846-77
MC10H115	**★ 1105**
	848-37
MC10H116	**★ 1105**
	848-19
MC10H117	**★ 1105**
	846-118
MC10H118	**★ 1105**
	846-102
MC10H119	846-110
MC10H121	**★ 1105**
	846-126
MC10H124	**★ 1105**
	847-150
MC10H125	**★ 1105**
	847-141
MC10H130	**★ 1105**
	847-1
MC10H131	**★ 1105**
	845-116
MC10H136	**★ 1105**
	845-56
MC10H141	**★ 1105**
	847-127
MC10H145	**★ 1105**
	847-51
MC10H158	**★ 1105**
	847-110
MC10H159	**★ 1105**
	847-103
MC10H160	**★ 1105**
	848-54
MC10H161	**★ 1105**
	845-82
MC10H162	**★ 1105**
	845-73
MC10H164	**★ 1105**
	847-118
MC10H166	**★ 1105**
	845-30
MC10H173	**★ 1105**
	847-34
MC10H174	**★ 1105**
	847-96
MC10H175	**★ 1105**
	846-148
MC10H176	**★ 1105**
	845-126
MC10H210	**★ 1105**
	846-19
MC10H211	**★ 1105**
	846-38
PAL10H8-2C	**★ 689**
PAL10H8-2C	**★ 4681**
	4472-100
PAL10H8-2M	**★ 689**
PAL10H8-2M	**★ 4681**
	4473-5
PAL10H8C	**★ 689**
PAL10H8C	**★ 4681**
	4471-50
PAL10H8M	**★ 689**
PAL10H8M	**★ 4681**
	4472-42
PAL10L8-2C	**★ 689**
PAL10L8-2C	**★ 4681**
	4472-101
PAL10L8-2M	**★ 689**
PAL10L8-2M	**★ 4681**
	4473-6
PAL10L8C	**★ 689**
PAL10L8C	**★ 4681**
	4471-51
PAL10L8M	**★ 689**
PAL10L8M	**★ 4681**
	4472-43
PAL12H6-2C	**★ 689**
PAL12H6-2C	**★ 4681**
	4472-102
PAL12H6-2M	**★ 689**
PAL12H6-2M	**★ 4681**
	4473-7
PAL12H6C	**★ 689**
PAL12H6C	**★ 4681**
	4471-52
PAL12H6M	**★ 689**
PAL12H6M	**★ 4681**
	4472-44
PAL12L10C	**★ 4682**
	4472-19
PAL12L10M	**★ 4682**
	4472-45
PAL12L6-2C	**★ 689**
PAL12L6-2C	**★ 4681**
	4472-103
PAL12L6-2M	**★ 689**
PAL12L6-2M	**★ 4681**
	4473-8
PAL12L6C	**★ 689**
PAL12L6C	**★ 4681**
	4471-53
PAL12L6M	**★ 689**
PAL12L6M	**★ 4681**
	4472-46
PAL14H4-2C	**★ 689**
PAL14H4-2C	**★ 4681**
	4472-104
PAL14H4-2M	**★ 689**
PAL14H4-2M	**★ 4681**
	4473-9
PAL14H4C	**★ 689**
PAL14H4C	**★ 4681**
	4471-54
PAL14H4M	**★ 689**
PAL14H4M	**★ 4681**
	4472-47
PAL14L4-2C	**★ 689**
PAL14L4-2C	**★ 4681**
	4472-105
PAL14L4-2M	**★ 689**
PAL14L4-2M	**★ 4681**
	4473-10
PAL14L4C	**★ 689**
PAL14L4C	**★ 4681**
	4471-55
PAL14L4M	**★ 689**
PAL14L4M	**★ 4681**
	4472-48
PAL14L8C	**★ 4682**
	4472-20
PAL14L8M	**★ 4682**
	4472-49
PAL15R4	**★ 4681**
PAL16A4C	**★ 690**
PAL16A4C	**★ 4681**
	4472-21
PAL16A4M	**★ 690**
PAL16A4M	**★ 4681**
	4472-50
PAL16C1-2C	**★ 689**
PAL16C1-2C	**★ 4681**
	4472-106
PAL16C1-2M	**★ 689**
PAL16C1-2M	**★ 4681**
	4473-11
PAL16C1C	**★ 689**
PAL16C1C	**★ 4681**
	4472-22
PAL16C1M	**★ 689**
PAL16C1M	**★ 4681**
	4472-51
PAL16H2-2C	**★ 689**
PAL16H2-2C	**★ 4681**
	4472-107
PAL16H2-2M	**★ 689**
PAL16H2-2M	**★ 4681**
	4473-12
PAL16H2C	**★ 689**
PAL16H2C	**★ 4681**
	4471-56
PAL16H2M	**★ 689**
PAL16H2M	**★ 4681**
	4472-52
PAL16L2-2C	**★ 689**
PAL16L2-2C	**★ 4681**
	4472-108
PAL16L2-2M	**★ 689**
PAL16L2-2M	**★ 4681**
	4473-13

Arranged alphanumerically from left to right.

ADVERTISERS' PRODUCT INDEX

Device	Page-Line
Monolithic Memories, Inc. (Cont'd)	
PAL16L2C	★ 689
PAL16L2C	★ 4681
	4471-57
PAL16L2M	★ 689
PAL16L2M	★ 4681
	4472-53
PAL16L6C	★ 4682
	4472-23
PAL16L6M	★ 4682
	4472-54
PAL16L8A-2C	★ 690
PAL16L8A-2C	★ 691
PAL16L8A-2C	★ 4681
PAL16L8A-2C	★ 4683
PAL16L8A-2C	★ 4687
	4471-58
PAL16L8A-2M	★ 690
PAL16L8A-2M	★ 691
PAL16L8A-2M	★ 4681
PAL16L8A-2M	★ 4683
PAL16L8A-2M	★ 4687
	4472-74
PAL16L8A-4C	★ 690
PAL16L8A-4C	★ 691
PAL16L8A-4C	★ 4681
PAL16L8A-4C	★ 4683
PAL16L8A-4C	★ 4687
	4472-86
PAL16L8A-4M	★ 690
PAL16L8A-4M	★ 691
PAL16L8A-4M	★ 4681
PAL16L8A-4M	★ 4683
PAL16L8A-4M	★ 4687
	4473-1
PAL16L8AC	★ 690
PAL16L8AC	★ 691
PAL16L8AC	★ 4681
PAL16L8AC	★ 4683
PAL16L8AC	★ 4687
	4470-18
PAL16L8AM	★ 690
PAL16L8AM	★ 691
PAL16L8AM	★ 4681
PAL16L8AM	★ 4683
PAL16L8AM	★ 4687
	4470-86
PAL16L8B-2C	★ 690
PAL16L8B-2C	★ 691
PAL16L8B-2C	★ 4681
PAL16L8B-2C	★ 4683
PAL16L8B-2C	★ 4687
	4470-19
PAL16L8B-4C	★ 690
PAL16L8B-4C	★ 691
PAL16L8B-4C	★ 4681
PAL16L8B-4C	★ 4683
PAL16L8B-4C	★ 4687
	4471-59
PAL16L8BC	★ 690
PAL16L8BC	★ 691
PAL16L8BC	★ 4681
PAL16L8BC	★ 4683
PAL16L8BC	★ 4687
	4469-72
PAL16P8AC	★ 4681
	4470-20
PAL16P8AM	★ 4681
	4470-87
PAL16R4A-2C	★ 690
PAL16R4A-2C	★ 691
PAL16R4A-2C	★ 4683
PAL16R4A-2C	★ 4690
	4471-60
PAL16R4A-2M	★ 690
PAL16R4A-2M	★ 691
PAL16R4A-2M	★ 4683
PAL16R4A-2M	★ 4690
	4472-75
PAL16R4A-4C	★ 690
PAL16R4A-4C	★ 691
PAL16R4A-4C	★ 4683
PAL16R4A-4C	★ 4690
	4472-87
PAL16R4A-4M	★ 690
PAL16R4A-4M	★ 691
PAL16R4A-4M	★ 4683
PAL16R4A-4M	★ 4690
	4473-2
PAL16R4AC	★ 690
PAL16R4AC	★ 691
PAL16R4AC	★ 4683
PAL16R4AC	★ 4690
	4470-21
PAL16R4AM	★ 690
PAL16R4AM	★ 691
PAL16R4AM	★ 4683
PAL16R4AM	★ 4690
	4470-88
PAL16R4B-2C	★ 690
PAL16R4B-2C	★ 691
PAL16R4B-2C	★ 4683
PAL16R4B-2C	★ 4690
	4470-22
PAL16R4B-4C	★ 690
PAL16R4B-4C	★ 691
PAL16R4B-4C	★ 4683
PAL16R4B-4C	★ 4690
	4471-61
PAL16R4BC	★ 690
PAL16R4BC	★ 691
PAL16R4BC	★ 4683
PAL16R4BC	★ 4690
	4469-73
PAL16R6A-2C	★ 690
PAL16R6A-2C	★ 691
PAL16R6A-2C	★ 4681
PAL16R6A-2C	★ 4683
PAL16R6A-2C	★ 4689
	4471-62
PAL16R6A-2M	★ 690
PAL16R6A-2M	★ 691
PAL16R6A-2M	★ 4681
PAL16R6A-2M	★ 4683
PAL16R6A-2M	★ 4689
	4472-76
PAL16R6A-4C	★ 690
PAL16R6A-4C	★ 691
PAL16R6A-4C	★ 4681
PAL16R6A-4C	★ 4683
PAL16R6A-4C	★ 4689
	4472-88
PAL16R6A-4M	★ 690
PAL16R6A-4M	★ 691
PAL16R6A-4M	★ 4681
PAL16R6A-4M	★ 4683
PAL16R6A-4M	★ 4689
	4473-3
PAL16R6AC	★ 690
PAL16R6AC	★ 691
PAL16R6AC	★ 4681
PAL16R6AC	★ 4683
PAL16R6AC	★ 4689
	4470-23
PAL16R6AM	★ 690
PAL16R6AM	★ 691
PAL16R6AM	★ 4681
PAL16R6AM	★ 4683
PAL16R6AM	★ 4689
	4470-89
PAL16R6B-2C	★ 690
PAL16R6B-2C	★ 691
PAL16R6B-2C	★ 4681
PAL16R6B-2C	★ 4683
PAL16R6B-2C	★ 4689
	4470-24
PAL16R6B-4C	★ 690
PAL16R6B-4C	★ 691
PAL16R6B-4C	★ 4681
PAL16R6B-4C	★ 4683
PAL16R6B-4C	★ 4689
	4471-63
PAL16R6BC	★ 690
PAL16R6BC	★ 691
PAL16R6BC	★ 4681
PAL16R6BC	★ 4683
PAL16R6BC	★ 4689
	4469-74
PAL16R8A-2C	★ 690
PAL16R8A-2C	★ 691
PAL16R8A-2C	★ 4681
PAL16R8A-2C	★ 4683
PAL16R8A-2C	★ 4688
	4471-64
PAL16R8A-2M	★ 690
PAL16R8A-2M	★ 691
PAL16R8A-2M	★ 4681
PAL16R8A-2M	★ 4683
PAL16R8A-2M	★ 4688
	4472-77
PAL16R8A-4C	★ 690
PAL16R8A-4C	★ 691
PAL16R8A-4C	★ 4681
PAL16R8A-4C	★ 4683
PAL16R8A-4C	★ 4688
	4472-89
PAL16R8A-4M	★ 690
PAL16R8A-4M	★ 691
PAL16R8A-4M	★ 4681
PAL16R8A-4M	★ 4683
PAL16R8A-4M	★ 4688
	4473-4
PAL16R8AC	★ 690
PAL16R8AC	★ 691
PAL16R8AC	★ 4681
PAL16R8AC	★ 4683
PAL16R8AC	★ 4688
	4470-25
PAL16R8AM	★ 690
PAL16R8AM	★ 691
PAL16R8AM	★ 4681
PAL16R8AM	★ 4683
PAL16R8AM	★ 4688
	4470-90
PAL16R8B-2C	★ 690
PAL16R8B-2C	★ 691
PAL16R8B-2C	★ 4681
PAL16R8B-2C	★ 4683
PAL16R8B-2C	★ 4688
	4470-26
PAL16R8B-4	★ 690
PAL16R8B-4	★ 691
PAL16R8B-4	★ 4681
PAL16R8B-4	★ 4683
PAL16R8B-4	★ 4688
	4471-65
PAL16R8BC	★ 690
PAL16R8BC	★ 691
PAL16R8BC	★ 4681
PAL16R8BC	★ 4683
PAL16R8BC	★ 4688
	4469-75
PAL16RA8	★ 4681
	4470-91
PAL16RP4AC	★ 4681
	4470-27
PAL16RP4AM	★ 4681
	4470-92
PAL16RP6AC	★ 4681
	4470-28
PAL16RP6AM	★ 4681
	4470-93
PAL16RP8AC	★ 4681
	4470-29
PAL16RP8AM	★ 4681
	4470-94
PAL16X4C	★ 690
PAL16X4C	★ 4681
	4472-24
PAL16X4M	★ 690
PAL16X4M	★ 4681
	4472-55
PAL18L4C	★ 4682
	4472-25
PAL18L4M	★ 4682
	4472-56
PAL20C1C	★ 4682
	4472-26
PAL20C1M	★ 4682
	4472-57
PAL20L10AC	★ 691
PAL20L10AC	★ 4682
PAL20L10AC	★ 4702
PAL20L10AC	★ 4706
	4470-95
PAL20L10C	★ 691
PAL20L10C	★ 4682
PAL20L10C	★ 4702
PAL20L10C	★ 4706
	4472-78
PAL20L10M	★ 691
PAL20L10M	★ 4682
PAL20L10M	★ 4702
PAL20L10M	★ 4706
	4472-109
PAL20L2C	★ 4682
	4472-27
PAL20L2M	★ 4682
	4472-58
PAL20L8A-2C	★ 691
PAL20L8A-2C	★ 4682
PAL20L8A-2C	★ 4693
PAL20L8A-2C	★ 4698
	4471-66
PAL20L8AC	★ 691
PAL20L8AC	★ 4682
PAL20L8AC	★ 4693
PAL20L8AC	★ 4698
	4470-30
PAL20L8AM	★ 691
PAL20L8AM	★ 4682
PAL20L8AM	★ 4693
PAL20L8AM	★ 4698
	4470-96
PAL20L8BC	★ 691
PAL20L8BC	★ 4682
PAL20L8BC	★ 4693
PAL20L8BC	★ 4698
	4469-76
PAL20R4A-2C	★ 691
PAL20R4A-2C	★ 4682
PAL20R4A-2C	★ 4693
PAL20R4A-2C	★ 4701
	4471-67
PAL20R4AC	★ 691
PAL20R4AC	★ 4682
PAL20R4AC	★ 4693
PAL20R4AC	★ 4701
	4470-31
PAL20R4AM	★ 691
PAL20R4AM	★ 4682
PAL20R4AM	★ 4693
PAL20R4AM	★ 4701
	4470-97
PAL20R4B-2C	★ 691
PAL20R4B-2C	★ 4682
PAL20R4B-2C	★ 4693
PAL20R4B-2C	★ 4701
	4471-68
PAL20R4BC	★ 691
PAL20R4BC	★ 4682
PAL20R4BC	★ 4693
PAL20R4BC	★ 4701
	4469-77
PAL20R6A-2C	★ 691
PAL20R6A-2C	★ 4682
PAL20R6A-2C	★ 4693
PAL20R6A-2C	★ 4700
	4471-69
PAL20R6AC	★ 691
PAL20R6AC	★ 4682
PAL20R6AC	★ 4693
PAL20R6AC	★ 4700
	4470-32
PAL20R6AM	★ 691
PAL20R6AM	★ 4682
PAL20R6AM	★ 4693
PAL20R6AM	★ 4700
	4470-98
PAL20R6B-2C	★ 691
PAL20R6B-2C	★ 4682
PAL20R6B-2C	★ 4693
PAL20R6B-2C	★ 4700
	4471-70
PAL20R6BC	★ 691
PAL20R6BC	★ 4682
PAL20R6BC	★ 4693
PAL20R6BC	★ 4700
	4469-78
PAL20R8A-2C	★ 691
PAL20R8A-2C	★ 4682
PAL20R8A-2C	★ 4693
PAL20R8A-2C	★ 4699
	4471-71
PAL20R8AC	★ 691
PAL20R8AC	★ 4682
PAL20R8AC	★ 4693
PAL20R8AC	★ 4699
	4470-33
PAL20R8AM	★ 691
PAL20R8AM	★ 4682
PAL20R8AM	★ 4693
PAL20R8AM	★ 4699
	4470-99
PAL20R8B-2C	★ 691
PAL20R8B-2C	★ 4682
PAL20R8B-2C	★ 4693
PAL20R8B-2C	★ 4699
	4471-72
PAL20R8BC	★ 691
PAL20R8BC	★ 4682
PAL20R8BC	★ 4693
PAL20R8BC	★ 4699
	4469-79
PAL20RA10C	★ 691
PAL20RA10C	★ 4682
	4471-1
PAL20RA10M	★ 691
PAL20RA10M	★ 4682
	4471-73
PAL20RS10C	★ 4682
	4471-74
PAL20RS10M	★ 4682
	4472-28
PAL20RS4C	★ 4682
	4471-75
PAL20RS4M	★ 4682
	4472-29
PAL20RS8C	★ 4682
	4471-76
PAL20RS8M	★ 4682
	4472-30
PAL20S10C	★ 4682
	4471-77
PAL20S10M	★ 4682
	4472-31
PAL20X10AC	★ 691
PAL20X10AC	★ 4682
PAL20X10AC	★ 4702
PAL20X10AC	★ 4709
	4471-2
PAL20X10C	★ 691
PAL20X10C	★ 4682
PAL20X10C	★ 4702
PAL20X10C	★ 4709
	4472-79
PAL20X10M	★ 691
PAL20X10M	★ 4682
PAL20X10M	★ 4702
PAL20X10M	★ 4709
	4472-110
PAL20X4AC	★ 691
PAL20X4AC	★ 4682
PAL20X4AC	★ 4702
PAL20X4AC	★ 4707
	4471-3
PAL20X4C	★ 691
PAL20X4C	★ 4682
PAL20X4C	★ 4702
PAL20X4C	★ 4707
	4472-80
PAL20X4M	★ 691
PAL20X4M	★ 4682
PAL20X4M	★ 4702
PAL20X4M	★ 4707
	4472-111
PAL20X8AC	★ 691
PAL20X8AC	★ 4682
PAL20X8AC	★ 4702
PAL20X8AC	★ 4708
	4471-4
PAL20X8C	★ 691
PAL20X8C	★ 4682
PAL20X8C	★ 4702
PAL20X8C	★ 4708
	4472-81
PAL20X8M	★ 691
PAL20X8M	★ 4682
PAL20X8M	★ 4702
PAL20X8M	★ 4708
	4472-112
PAL32R16C	★ 691
PAL32R16C	★ 4682
	4475-3
PAL32R16M	★ 691
PAL32R16M	★ 4682
	4475-4
PAL64R32C	★ 4682
	4472-82
PAL64R32M	★ 4682
	4475-5
PAL6L16AC	★ 4682
	4470-34
PAL8L14AC	★ 4682
	4470-35
PALASM	5056-79
PLE10P4C	4474-20
PLE10P4M	4474-21
PLE10P8C	4474-22
PLE10P8M	4474-23
PLE10R8C	4474-24
PLE10R8M	4474-25
PLE11P4C	4474-26
PLE11P4M	4474-27
PLE11P8C	4474-28
PLE11P8M	4474-29
PLE11RA8C	4474-30
PLE11RA8M	4474-31
PLE11RS8C	4474-32
PLE11RS8M	4474-33
PLE12P4C	4474-34
PLE12P4M	4474-35
PLE12P8C	4474-36
PLE12P8M	4474-37
PLE5P8AC	4474-7
PLE5P8C	4474-8
PLE5P8M	4474-9
PLE8P4C	4474-10
PLE8P4M	4474-11
PLE8P8C	4474-12
PLE8P8M	4474-13
PLE9P4C	4474-14
PLE9P4M	4474-15
PLE9P8C	4474-16
PLE9P8M	4474-17
PLE9R8C	4474-18
PLE9R8M	4474-19
S74LS498	882-109
SN54LS210	883-155
SN54LS240	883-156
SN54LS240	2882-50
SN54LS241	884-38
SN54LS241	2882-5
SN54LS244	884-88
SN54LS244	2882-6
SN54LS245	885-107
SN54LS245	2882-7
SN54LS273	866-154
SN54LS310	884-39
SN54LS340	883-157
SN54LS340	2882-51
SN54LS341	884-40
SN54LS341	2882-8
SN54LS344	884-89
SN54LS344	2882-9
SN54LS373	876-15
SN54LS374	867-14
SN54LS377	867-43
SN54LS380	★ 1100
	882-112
SN54LS450	★ 1100
	880-85
SN54LS451	★ 1100
	878-67
SN54LS453	★ 1100
	879-131
SN54LS460	★ 1100
	886-151
SN54LS461	★ 1100
	859-94
SN54LS469	★ 1100
	859-120
SN54LS491	★ 1100
	862-54
SN54LS498	★ 1100
	882-110
SN54LS533	876-75
SN54LS534	866-132
SN54LS546	882-21
SN54LS547	875-156
SN54LS548	★ 1110
	844-98
SN54LS549	★ 1110
	876-93
SN54LS566	882-19
SN54LS567	875-153
SN54LS645	885-108
SN54LS645	2890-7
SN54LS645-1	2890-8
SN54LS646	★ 1108
	885-132
SN54LS647	★ 1108
	885-128
SN54LS648	★ 1108
	885-28
SN54LS649	★ 1108
	884-140
SN54LS651	★ 1109
	885-29
SN54LS652	★ 1109
	885-133
SN54LS653	★ 1109
	884-141

¶ Indicates page number in Application Note Directory.
★ Indicates additional data is provided on the page noted.

Monolithic Memories, Inc. (Cont'd)

Device	Page-Line
SN54LS654	**★ 1109**
	885-129
SN54LS793	**★ 1111**
	875-158
SN54LS794	**★ 1111**
	882-23
SN54S148	**★ 1103**
	888-165
SN54S182	855-112
SN54S210	858-67
SN54S210	883-123
SN54S244	2882-10
SN54S273	866-162
SN54S348	**★ 1103**
	888-172
SN54S373	876-33
SN54S374	867-27
SN54S377	867-51
SN54S381	**★ 1103**
	855-73
SN54S382	**★ 1103**
	855-113
SN54S408	2892-83
SN54S408-2	2892-84
SN54S409	2892-89
SN54S409-2	2892-90
SN54S409-3	2892-91
SN54S508	854-1
SN54S516	855-124
SN54S533	876-79
SN54S534	866-135
SN54S556	**★ 1103**
SN54S556	**★ 1119**
	843-72
SN54S557	843-33
SN54S558	843-34
SN54S700	**★ 1104**
	2893-28
SN54S730	**★ 1104**
	2893-29
SN54S731	**★ 1104**
	2893-30
SN54S734	**★ 1104**
	2893-31
SN54S818	876-139
SN54S818	881-9
SN74LS240	2882-52
SN74LS341	884-41
SN74LS341	2882-11
SN74LS344	884-90
SN74LS344	2882-12
SN74LS380	**★ 1100**
	882-113
SN74LS450	**★ 1100**
	880-86
SN74LS451	**★ 1100**
	878-68
SN74LS453	**★ 1100**
	879-132
SN74LS460	**★ 1100**
	886-152
SN74LS461	**★ 1100**
	859-95
SN74LS469	**★ 1100**
	859-121
SN74LS491	**★ 1100**
	862-55
SN74LS498	**★ 1100**
SN74LS546	**★ 1107**
	882-22
SN74LS547	**★ 1107**
	875-157
SN74LS548	**★ 1107**
SN74LS548	**★ 1110**
	844-99
SN74LS549	**★ 1107**
SN74LS549	**★ 1110**
	876-94
SN74LS566	**★ 1107**
	882-20
SN74LS567	**★ 1107**
	875-154
SN74LS645	2890-28
SN74LS645-1	2890-29
SN74LS646	**★ 1106**
SN74LS646	**★ 1108**
	885-134
SN74LS647	**★ 1107**
SN74LS647	**★ 1108**
	885-130
SN74LS648	**★ 1107**
SN74LS648	**★ 1108**
	885-30
SN74LS649	**★ 1107**
SN74LS649	**★ 1108**
	884-142
	★ 1107
	★ 1108
	2890-52
SN74LS651	**★ 1107**
SN74LS651	**★ 1109**
	885-31
SN74LS652	**★ 1107**
SN74LS652	**★ 1109**
	885-135
SN74LS653	**★ 1107**
SN74LS653	**★ 1109**
	884-143
SN74LS654	**★ 1107**
SN74LS654	**★ 1109**
	885-131
SN74LS793	**★ 1107**
SN74LS793	**★ 1111**
	875-159
SN74LS794	**★ 1107**
SN74LS794	**★ 1111**
	882-24
SN74S148	**★ 1103**
	888-166
SN74S182	855-114
SN74S225	**★ 1114**
	3809-14
SN74S225A	**★ 1114**
	3809-16
SN74S240	883-169
SN74S240	2882-53
SN74S241	884-54
SN74S241	2882-13
SN74S244	884-95
SN74S244	2882-14
SN74S310	884-104
SN74S340	884-105
SN74S348	**★ 1103**
	888-173
SN74S374	867-28
SN74S381	**★ 1103**
	855-74
SN74S382	**★ 1103**
	855-115
SN74S408	**★ 1104**
	2892-85
SN74S408-2	**★ 1104**
	2892-86
SN74S408-3	**★ 1104**
	2892-87
SN74S409	**★ 1104**
	2892-92
SN74S409-2	**★ 1104**
	2892-93
SN74S409-3	**★ 1104**
	2892-94
SN74S508	**★ 1103**
	855-121
SN74S516	**★ 1103**
	855-125
SN74S532	867-29
SN74S534	866-136
SN74S535	876-80
SN74S536	866-137
SN74S556	**★ 1103**
SN74S556	**★ 1119**
	843-73
SN74S557	**★ 1103**
	843-35
SN74S558	**★ 1103**
	843-36
SN74S700	**★ 1104**
	2893-32
SN74S730	**★ 1104**
	2893-33
SN74S731	**★ 1104**
	2893-34
SN74S734	**★ 1104**
	2893-35
SN74S818	876-140
SN74S818	881-10
ZAL16RP6C	4475-53
ZHAL10H8C	4475-54
ZHAL10L8C	4475-55
ZHAL10P8C	4475-56
ZHAL12H6C	4475-57
ZHAL12P6C	4475-58
ZHAL14H4C	4475-59
ZHAL14L4C	4475-60
ZHAL14P4C	4475-61
ZHAL16H2C	4475-62
ZHAL16L2C	4475-63
ZHAL16L8C	4475-64
ZHAL16P1C	4475-65
ZHAL16P2C	4475-66
ZHAL16P8C	4475-67
ZHAL16R4C	4475-68
ZHAL16R6C	4475-69
ZHAL16R8C	4475-70
ZHAL16RP4C	4475-71
ZHAL16RP8C	4475-72

Mostek

Device	Page-Line
DSIO	2044-29
GB10000D	4451-32
GB1000D	4451-16
GB2000D	4451-20
GB3000D	4451-23
GB4000D	4451-26
GB6000D	4451-28
GB8000D	4451-30
HIGHLAND 2	4460-41
HIGHLAND 2	4483-63
Highland	4925-3
Highland 2	4925-3
MD-SBC1	2005-5
MDX-CPU1	2019-35
MDX-CPU2	¶ 379-13
MDX-CPU2A	2019-34
MDX-CPU3	2021-6
MDX-CPU4	2021-7
MDX-PIO	¶ 379-13
MK14007	1460-133
MK2870	1453-24
MK36000-4	3850-107
MK36000-5	3851-25
MK37000-4	3850-123
MK37000-5	3850-124
MK38000-20	3852-100
MK38000-25	3852-130
MK3801-6	1468-44
MK3805	¶ 370-5
MK3805	¶ 438-10
MK3807	1453-25
	¶ 370-5
	¶ 383-9
MK3850	1460-3
MK3850	1421-39
MK3851	1460-8
MK3852	1460-6
MK3853	1460-9
MK3854	1460-5
MK3861	1460-7
MK3870	1423-1
MK3870/10	1453-17
MK3870/12	1453-8
MK3870/20	1453-18
MK3870/22	1453-9
MK3870/30	1453-19
MK3870/32	1453-10
MK3870/40	1453-20
MK3870/42	1453-11
MK3873	1423-2
MK3880	1423-3
MK3880-6	1460-63
MK3881	1460-120
MK3882	1460-89
MK3883	1460-108
MK3884	1460-134
	¶ 370-10
	¶ 377-14
MK3885	1460-135
	¶ 370-10
MK3887	1460-136
	¶ 370-10
MK38P70	1453-3
MK38P70/02	1453-4
MK3901	**★ 4116**
	3853-69
MK4027	¶ 383-14
MK4027	¶ 435-13
MK4027	¶ 438-5
MK4027	¶ 441-9
MK4027	¶ 441-14
MK4104-33	3840-60
MK4104-34	3840-69
MK4104-35	3840-91
MK4104-4	3840-70
MK4104-5	3840-92
MK4116	¶ 373-13
MK4116	¶ 383-14
MK4116	¶ 435-13
MK4116	¶ 438-2
MK4116	¶ 438-4
MK4116	¶ 440-5
MK4116	¶ 440-6
MK4116	¶ 441-9
MK4116	¶ 441-14
MK4116-2	3826-57
MK4116-3	3826-70
MK4116-4	3826-84
MK4332	¶ 440-6
MK4332D-3	3826-109
MK4501-12	**★ 4114**
	3810-7
MK4501-15	**★ 4114**
	3809-126
MK4501-20	**★ 4114**
	3809-125
MK4516	¶ 440-6
MK4516-10	3826-44
MK4516-12	3826-48
MK4516-15	3826-53
MK4528	¶ 440-6
MK4528-15	3828-59
MK4528-20	3828-62
MK4528-25	3828-63
MK4564	¶ 435-13
MK4564	¶ 440-6
MK4564	¶ 441-15
MK4564-15	3827-55
MK4564-20	3827-78
MK4564-25	3827-92
MK45H64-10	**★ 4117**
	3827-16
MK45H64-12	**★ 4117**
	3827-32
MK45H64-8	**★ 4117**
	3827-6
MK4801A	¶ 435-13
MK4801A	¶ 439-18
MK4801A-1	3837-27
MK4801A-2	3837-35
MK4801A-3	3837-38
MK4801A-4	3837-41
MK4801A-55	3837-10
MK4801A-70	3837-11
MK4801A-90	3837-13
MK4802	¶ 435-13
MK4802	¶ 439-18
MK4856-10	3826-110
MK4856-12	3826-112
MK4856-15	3827-2
MK48C02-15	3838-85
MK48C02-20	3839-16
MK48C02-25	3839-46
MK48C02L-15	3838-86
MK48C02L-20	3839-17
MK48C02L-25	3839-47
MK48Z02-15	**★ 4115**
	3838-64
MK48Z02-20	**★ 4115**
	3838-112
MK48Z02-25	**★ 4115**
	3839-28
MK5002	890-30
MK5005	890-31
MK5007	890-32
MK5009	890-47
	¶ 357-1
MK50240	3321-8
MK50395	890-34
	¶ 356-10
MK50396	890-35
	¶ 356-10
MK50397	890-36
	¶ 356-10
MK50398	890-37
MK50399	890-38
MK5087	3382-72
MK5089	3382-73
MK5091	3382-74
MK5092	3382-75
MK5094	3382-76
MK5098	¶ 412-19
MK50981	3378-82
	¶ 412-19
MK50982	3378-83
	¶ 412-19
MK5099	¶ 412-19
MK50991	3378-84
MK50992	3378-85
	¶ 411-3
	¶ 412-19
MK5102	¶ 411-4
MK5102-5	3381-137
MK5103	¶ 411-4
MK5103-5	3381-138
MK5116	3377-145
MK5151	3377-146
MK5156	3377-48
MK5170	3378-37
MK5175	3378-127
MK5176	3379-5
MK5177	3379-6
MK5316	**★ 3608**
	3377-82
MK5320	**★ 3608**
MK5370	**★ 3610**
MK5371	**★ 3610**
MK5372	**★ 3610**
MK5374	3379-8
MK5375	**★ 3609**
	3379-7
MK5376	3379-9
MK5380	3382-77
	¶ 412-6
MK5389	3382-78
MK68000	**★ 1647**
	1437-39
MK68000-10	**★ 1647**
	1463-116
MK68000-4	**★ 1647**
	1463-117
MK68000-6	**★ 1647**
	1463-118
MK68000-8	**★ 1647**
	1463-119
MK68008	**★ 1648**
	1437-40
MK68010	1437-41
MK68200	**★ 1650**
	1464-42
	★ 1650
	1435-28
MK68201	**★ 1650**
MK68211	**★ 1650**
MK68230-10	**★ 1649**
	1464-48
MK68230-8	**★ 1649**
	1464-49
MK683201	**★ 1650**
MK68345	1464-29
MK68345-12	1464-30
MK68345-15	1464-31
MK68345-20	1464-32
MK68451	**★ 1651**
	1464-39
MK68540	1464-27
MK68564	**★ 1652**
	1464-58
MK68590	**★ 3611**
	1464-36
	1466-100
MK68591	1466-103
MK68901	**★ 1653**
	1464-44
MK68E211	**★ 1650**
MK75601	2044-43
MK75602	2023-14
MK75602	2045-20
MK75701	2045-43
MK75801	2044-30
MK75802	2043-46
MK75802	2044-52
MK75803	2043-41
MK77650	2041-38
MK77655	2041-35
MK77665	2041-29
MK77666	2041-30
MK77670	2041-28
MK77671	2040-49
MK77672	2040-11
MK77673	2040-12
MK77674	2041-36
MK77676	2040-54
MK77677	2040-22
MK77678	2041-16
MK77679	2041-17
MK77753	2041-53
MK77754-0	2042-16
MK77760	2041-48
MK77761-0	2042-20
MK77762	2041-47
MK77763	2042-4
MK77764	2042-25
MK77765	2042-29
MK77852	2041-45
MK77950	2042-38
MK77963-0	2042-39
MK77967	2042-34
MK7803	2043-42
MK78109	2042-17
MK78110	2042-26
MK78146	2040-23
MK78172-42	2039-58
MK78172-56	2039-59
MK78175-40	2039-60
MK78177-26	2040-6
MK78192	2040-53
MK78198	2042-36
MK78199	2042-35
MK8086	1435-29
MKB36000-83	3850-108
MKB36000-84	3851-26
MKB37000-84	3850-109
MKB37000-85	3851-27
MKB38000-84	3852-131
MKB38000-85	3853-14
MKB3880-80	1460-64
MKB3880-84	1460-65
MKB3881-80	1460-121
MKB3881-84	1460-122
MKB3882-80	1460-90
MKB3882-84	1460-91
MKB4027-83	3826-31
MKB4027-84	3826-34
MKB4104-84	3840-71
MKB4116-82	**★ 694**
	3826-58
MKB4116-83	**★ 694**
	3826-71
MKB4116-84	**★ 694**
	3826-85
MKB4501-81	3810-8
MKB4501-82	3809-127
MKB4516-80	3826-80
MKB4516-81	3826-91
MKB4516-82	3826-93
MKB4564-82	**★ 695**
	3827-56
MKB4564-83	**★ 695**
	3827-79
MKB4564-84	**★ 695**
	3827-93
MKB45H64-81	3827-33
MKB45H64-82	3827-57
MKB45H64-83	3827-80
MKB4801-87	3837-12
MKB4801-89	3837-14
MKB4801A-81	3837-28
MKB4817-82	3838-65
MKB4817-83	3838-66
MKB4817-84	3838-67
MKB6116-82	3838-68
MKB6116-83	3838-113
MKB6116-84	3839-29
MKB6116L-82	3838-69
MKB6116L-83	3838-114
MKB6116L-84	3839-30
MKB68000	1463-120
MKB68000	1437-42
MKGA1000D	**★ 4715**
	4451-18
MKGA2000D	**★ 4715**
	4451-19
MKGA3000D	**★ 4715**
	4451-22
MKGA4000D	**★ 4715**
	4451-25
MKGB10000D	**★ 4716**
	4451-33
MKGB1000D	**★ 4716**
	4451-17
MKGB2000D	**★ 4716**
	4451-21
MKGB3000D	**★ 4716**
	4451-24
MKGB4000D	**★ 4716**
	4451-27

Arranged alphanumerically from left to right.

ADVERTISERS' PRODUCT INDEX

Device	Page-Line
Mostek (Cont'd)	
MKGB6000D	★ 4716 4451-29
MKGB8000D	★ 4716 4451-31
MKJ4116-93	3826-72
MKJ4116-94	3826-86
MKJ4564-92	3827-58
SA Series	★ 4717 4480-22
SAXX, SBXX, STANDARD CELLS	4490-46
SB Series	4480-21
Sim	4963-2
TBD	2040-41
VME-NOCI	2044-49
VME-SBC	2023-15
Z80	¶ 383-14
Z80-SIO	¶ 370-5
Motorola Semiconductor Products	
35062	3401-43
AD562AK	2862-32
AD562AS	2859-88
AD563	2863-10
AM26LS31	★ 3211
AM26LS31	★ 3212 2884-16
AM26LS31C	★ 3211
AM26LS31C	★ 3212 2884-17
AM26LS31M	★ 3211
AM26LS31M	★ 3212 2884-18
AM26LS32	★ 3211
AM26LS32	★ 3212 2887-32
BPK70	★ 4125
C68A29	1455-32
CA3054	★ 3614 3309-92
CA3059	3405-128
CA3079	3405-129
DAC-08	★ 3630 2852-12
DAC-08A	★ 3630 2851-1
DAC-08C	★ 3630 2854-33
DAC-08E	★ 3630 2852-25
DAC-08H	★ 3630 2851-2
DG10H162	845-74
EXORciserII	1817-18
EXORsetDS35	1817-19
EXORsetDs35	1817-20
HCA6206	★ 4718 4451-36
HCA6212	★ 4718 4451-40
HCA6225	★ 4718 4451-45
HCA6238	★ 4718 4451-48
HCA6248	★ 4718 4451-49
HCA6306	★ 4718 4451-37
HCA6312	★ 4718 4451-41
HCA6324	★ 4718 4451-43
HCA6348	★ 4718 4451-50
HD6000	4451-51
HDS-200	★ 1904 1817-21
HDS-344	★ 1904
HDS-400	★ 1905 1819-1
HDS300	1819-2
LF347	★ 3618 3373-37
LF347B	★ 3618 3371-27
LF351	★ 3616 3348-16 3330-32 3357-22
LF353	★ 3617 3368-21
LF355	★ 3616 3357-17
LF355B	★ 3616 3351-48
LF356	★ 3616 3357-19
LF356B	★ 3616 3352-2
LF357	★ 3616 3357-15
LF357B	★ 3616 3351-41
LM101A	★ 3615 3330-16 3346-111
LM108	★ 3615 3347-1 3346-56
LM108A	★ 3615 3342-36
LM109H	★ 3622 3384-18
LM109K	★ 3622 3384-59
LM11	★ 3616 3340-66
LM111	★ 3631 3312-43
LM117	★ 3625 3393-94
LM117L	★ 3625 3393-68
LM117M	★ 3625 3394-1
LM11C	★ 3616 3343-29
LM11L	★ 3616 3352-21
LM123	★ 3622 3385-24
LM123A	★ 3622 3385-25
LM124	★ 3618 3334-148
LM137	★ 3625 3394-78
LM139	★ 3631 3316-3
LM139A	★ 3631 3315-30
LM140-12	★ 3622
LM140-12	★ 3623
LM140-12	★ 3624 3387-39
LM140-15	★ 3622
LM140-15	★ 3623
LM140-15	★ 3624 3388-39
LM140-18	★ 3622
LM140-18	★ 3623
LM140-18	★ 3624 3388-128
LM140-24	★ 3622
LM140-24	★ 3623
LM140-24	★ 3624 3389-90
LM140-5	★ 3622
LM140-5	★ 3623
LM140-5	★ 3624 3384-103
LM140-6	★ 3622
LM140-6	★ 3623
LM140-6	★ 3624 3385-99
LM140-8	★ 3622
LM140-8	★ 3623
LM140-8	★ 3624 3386-43
LM140A-12	★ 3622
LM140A-12	★ 3623
LM140A-12	★ 3624 3387-40
LM148	★ 3618 3371-34
LM150	★ 3625 3393-24
LM158	★ 3617 3334-115 3365-30
LM193	★ 3631 3314-25
LM193A	★ 3631 3313-47
LM201A	★ 3615 3346-112
LM208	★ 3615 3346-57
LM208A	★ 3615 3342-37
LM209H	★ 3622 3384-19
LM209K	★ 3622 3384-60
LM211	★ 3631 3312-44
LM217	★ 3625 3393-95
LM217L	★ 3625 3393-69
LM223	★ 3622 3385-26
LM223A	★ 3622 3385-27
LM224	★ 3618 3334-149
LM237	★ 3625 3394-79
LM237M	★ 3625 3394-63
LM239	★ 3631 3316-20
LM239A	★ 3631 3315-38
LM248	★ 3618 3372-35
LM250	★ 3625 3393-25
LM258	★ 3617 3334-116 3366-52
LM285-1	★ 3628 3402-8
LM285-2	★ 3628 3402-53
LM2900	★ 3618 3334-189
LM2901	★ 3631 3316-41
LM2902	★ 3618 3334-108
LM2903	★ 3631 3314-49
LM2904	★ 3617 3334-109
LM293	★ 3631 3314-35
LM2931-5	3384-6
LM293A	★ 3631 3313-52
LM301A	★ 3615 3356-22
LM307	★ 3616 3356-14
LM308	★ 3615 3356-9
LM308A	★ 3615 3342-57
LM309H	★ 3622 3384-20
LM309K	★ 3622 3384-61
LM311	★ 3631 3313-15
LM317	★ 3625 3393-96
LM317L	★ 3625 3393-70
LM317M	★ 3625 3394-2
LM323	★ 3622 3385-28
LM323A	★ 3622 3385-29
LM324	★ 3618 3334-150
LM337	★ 3625 3394-80
LM337M	★ 3625 3394-64
LM339	★ 3631 3316-21
LM339A	★ 3631 3315-39
LM340-12	★ 3622
LM340-12	★ 3624 3387-41
LM340-15	★ 3622
LM340-15	★ 3624 3388-40
LM340-18	★ 3622
LM340-18	★ 3624 3388-129
LM340-24	★ 3622
LM340-24	★ 3624 3389-91
LM340-5	★ 3622
LM340-5	★ 3624 3384-104
LM340-6	★ 3622
LM340-6	★ 3624 3385-100
LM340-8	★ 3622
LM340-8	★ 3624 3386-44
LM340A-12	★ 3622
LM340A-12	★ 3624 3387-42
LM348	★ 3618 3372-36
LM350	★ 3625 3393-26
LM358	★ 3617 3334-117 3366-53
LM385-1	★ 3628 3402-9
LM385-2	★ 3628 3402-54
LM385B-1	★ 3628 3402-10
LM385B-2	★ 3628 3402-55
LM3900	★ 3618 3334-190
LM393	★ 3631 3314-36
LM393A	★ 3631 3313-53
LM565	3376-16
M146805	¶ 363-9
M146805	¶ 370-2
M54516	3310-70
M54521	3310-71
M54527	3310-77
M54535	3310-169
M6800	¶ 365-14
M68000 (EXORmacs)	1819-3
M6805	¶ 363-9
M6805	¶ 365-17
M6805	¶ 369-15
M6805	¶ 370-2
M68KVM01	★ 2114
M68KVM02	★ 2114 2027-10
M68KVM03	★ 2115
M68KVM04	★ 2115 2029-29
M68KVM10-3	★ 2115 2045-41
M68KVM11-1	★ 2115 2043-22
M68KVM11-2	★ 2115 2043-23
M68KVM12	★ 2115 2043-16
M68KVM13	★ 2115
M68KVM20	★ 2115 2043-8
M68KVM21	★ 2115 2043-10
M68KVM22	★ 2116
M68KVM23	★ 2116
M68KVM30	★ 2116 2043-29
M68KVM31	★ 2116
M68KVM32	★ 2116
M68KVM33	★ 2116 2030-35
M68KVM60	★ 2116 2043-11
M68KVM80-1	★ 2116 2043-30
M68KVM80-4	★ 2116 2043-31
M68KVMCC1	★ 2117
M68KVMCH1	★ 2117
M68KVMMB851	★ 2115
M68KVMPM1	★ 2117
M68MM01	2007-14
M68MM01A2	2007-15
M68MM01B	2007-19
M68MM01B1A	2007-20
M68MM01D	2007-16
M68MM17	2007-22
M68MM19	2007-23
M68MM19A	2007-26
M68RAD1-1	2031-36
M68RIO1-1	2045-5
M68RWIN	2031-33
MAP	★ 1658
MBK2011	★ 4125
MBM2011A	★ 4125 3826-6
MBM2256	3826-10
MBM7110A	★ 4125 3826-5
MC10000 Series	¶ 356-7
MC10100	★ 1123 846-69
MC10101	★ 1123 846-95
MC10102	★ 1122 846-62
MC10103	★ 1122 846-28
MC10104	★ 1122 846-7
MC10105	★ 1123 846-86
MC10106	★ 1123 846-54
MC10107	★ 1123 846-141
MC10109	★ 1123 846-78
MC10110	★ 1122 846-20
MC10111	★ 1123 846-39 ¶ 395-3
MC10113	★ 1123 846-133
MC10114	★ 1131 848-20
MC10115	★ 1131 848-38 ¶ 358-4
MC10116	★ 1131 848-21 ¶ 358-4
MC10117	★ 1123 846-119
MC10118	★ 1123 846-103
MC10119	★ 1123 846-111
MC10121	★ 1123 846-127
MC10123	★ 1125 845-103 ¶ 395-3
MC10124	★ 1124 847-151 ¶ 358-4
MC10125	★ 1124 847-142 ¶ 358-4
MC10128	★ 1125 845-99 ¶ 358-4
MC10129	★ 1131 848-33 ¶ 358-4
MC10130	★ 1126 847-2
MC10131	★ 1126 845-117
MC10132	★ 1129 847-15
MC10133	★ 1126 847-27
MC10134	★ 1130 847-9
MC10135	★ 1126 845-138
MC10136	★ 1127 845-57
MC10137	★ 1127 845-65
MC10138	★ 1127 845-61
MC10141	★ 1128 847-128 ★ 1128 3854-124
MC10148	847-56
MC10153	★ 1126 847-28
MC10154	★ 1127 845-48
MC10158	★ 1129 847-111
MC10159	★ 1129 847-104
MC10160	★ 1132 848-55
MC10161	★ 1130 845-83
MC10162	★ 1130 845-75
MC10163	★ 1132 848-5 ★ 1132 2878-21
MC10164	★ 1129 847-119
MC10165	★ 1131 848-45
MC10166	★ 1132 845-31
MC10168	★ 1126 847-20
MC10170	★ 1132 848-50
MC10171	★ 1130 845-95
MC10172	★ 1130 845-89
MC10173	★ 1129 847-35
MC10174	★ 1129 847-97
MC10175	★ 1126 846-149
MC10176	★ 1126 845-127
MC10177	★ 1124 847-134
MC10178	★ 1127 845-49
MC10179	★ 1132 845-5
MC10180	★ 1132 845-12
MC10181	★ 1132 845-25
MC10182	★ 1132 845-16
MC10183	★ 1132 845-20
MC10186	★ 1126 845-133
MC10188	★ 1124 845-37
MC10189	★ 1124 845-40
MC10190	★ 1124 847-135
MC10191	★ 1124 847-155
MC10192	845-108
MC10193	★ 1132 848-6 ★ 1132 2878-22
MC10194	848-12 ¶ 398-11
MC10195	★ 1124 845-43
MC10197	★ 1122 846-11

¶ Indicates page number in Application Note Directory.
★ Indicates additional data is provided on the page noted.

Motorola Semiconductor Products (Cont'd)

Device	Page-Line
MC10198	★ **1131**
	847-123
MC10210	★ **1122**
	846-21
MC10211	★ **1123**
	846-40
MC10212	★ **1123**
	846-48
MC10216	★ **1131**
	848-22
	¶ 358-4
MC10231	★ **1127**
	845-118
MC10287	★ **1132**
	845-18
MC10315	¶ 389-17
MC10315	¶ 430-7
MC10315L	★ **3629**
	2833-2
MC10317	¶ 389-17
MC10317	¶ 430-7
MC10317L	★ **3629**
	2833-3
MC10318	★ **3630**
	2851-40
MC10318-9	★ **3630**
	2850-38
MC10318C-6	★ **3630**
	2854-53
MC10318C-7	★ **3630**
	2854-23
MC10319	★ **3629**
	844-7
	★ **3629**
	2837-48
MC10500	846-70
MC10501	846-96
MC10502	846-63
MC10503	846-29
MC10504	846-8
MC10505	846-87
MC10506	846-55
MC10507	846-142
MC10509	846-79
MC10513	846-134
MC10514	848-23
MC10515	848-39
MC10516	848-24
MC10517	846-120
MC10518	846-104
MC10519	846-112
MC10521	846-128
MC10524	847-152
MC10525	847-143
MC10530	847-3
MC10531	845-119
MC10532	847-16
MC10533	847-29
MC10534	847-10
MC10535	845-139
MC10536	845-58
MC10537	845-66
MC10538	845-62
MC10541	847-129
MC10541	3854-125
MC10553	847-30
MC10554	845-50
MC10558	847-112
MC10559	847-105
MC10560	848-56
MC10561	845-84
MC10562	845-76
MC10563	848-7
MC10563	2878-23
MC10564	847-120
MC10565	848-46
MC10566	845-32
MC10568	847-21
MC10571	845-96
MC10572	845-90
MC10574	847-98
MC10575	846-150
MC10576	845-128
MC10578	845-51
MC10579	845-6
MC10580	845-13
MC10581	845-26
MC10582	845-17
MC10586	845-134
MC10590	847-136
MC10591	847-156
MC10593	848-8
MC10593	2878-24
MC10594	848-13
MC10595	845-44
MC10597	846-12
MC10610	846-22
MC10611	846-41
MC10612	846-49
MC10616	848-25
MC10631	845-120
MC10687	845-19
MC10800	845-21
	¶ 382-7
	1449-97
	1411-17
MC10801	1449-102
	¶ 377-1
MC10803	¶ 377-1
MC10804	1449-98
MC10805	1449-99
MC10806	1449-104
MC10807	1449-100
MC10808	1449-103
MC10900	845-35
MC10900	1449-107
MC10901	845-34
MC10902	845-36
MC10902	1411-18
MC10904	848-10
MC10904	1449-108
MC10905	848-9
MC10H016	★ **1127**
	845-52
MC10H100	★ **1123**
	846-71
MC10H101	★ **1123**
	846-97
MC10H102	★ **1122**
	846-64
MC10H103	★ **1122**
	846-30
MC10H104	★ **1122**
	846-9
MC10H105	★ **1123**
	846-88
MC10H106	★ **1123**
	846-56
MC10H107	★ **1123**
	846-143
MC10H109	★ **1123**
	846-80
MC10H113	★ **1123**
	846-135
MC10H115	★ **1131**
	848-40
MC10H116	★ **1131**
	848-26
MC10H117	★ **1123**
	846-121
MC10H118	★ **1123**
	846-105
MC10H119	★ **1123**
	846-113
MC10H121	★ **1123**
	846-129
MC10H123	★ **1125**
	845-104
MC10H124	★ **1124**
	847-153
MC10H125	★ **1124**
	847-144
MC10H130	★ **1126**
	847-4
MC10H131	★ **1126**
	845-121
MC10H135	★ **1126**
	845-140
MC10H136	★ **1127**
	845-59
MC10H141	★ **1128**
	847-130
MC10H145	★ **1128**
MC10H145	★ **4123**
	847-52
	★ **1128**
	★ **4123**
	3831-6
MC10H155	847-39
MC10H158	★ **1129**
	847-113
MC10H159	★ **1129**
	847-106
MC10H160	★ **1132**
	848-57
MC10H161	★ **1130**
	845-85
MC10H162	★ **1130**
	845-77
MC10H164	★ **1129**
	847-121
MC10H165	★ **1131**
	848-47
MC10H166	★ **1132**
	845-33
MC10H171	★ **1130**
	845-97
MC10H172	★ **1130**
	845-91
MC10H173	★ **1129**
	847-36
MC10H174	★ **1129**
	847-99
MC10H175	★ **1126**
	846-151
MC10H176	★ **1126**
	845-129
MC10H179	★ **1132**
	845-7
MC10H180	★ **1132**
	845-14
MC10H181	★ **1132**
	845-27
MC10H186	★ **1126**
	845-135
MC10H188	★ **1124**
	845-38
MC10H189	★ **1124**
	845-41
MC10H209	★ **1123**
	849-106
MC10H210	★ **1122**
	846-23
MC10H211	★ **1123**
	846-42
MC10H330	★ **1125**
	848-32
MC10H332	★ **1125**
	848-11
MC10H334	★ **1125**
	848-31
MC10H350	★ **1124**
	847-137
MC10H423	★ **1125**
	845-100
MC10H424	★ **1124**
	847-146
MC12002	848-3
MC12002	3375-29
MC12009	890-93
	¶ 423-13
	3376-58
	3376-61
MC12011	890-100
	¶ 423-13
	3376-64
MC12013	890-109
	¶ 423-13
	3376-69
MC12014	890-39
MC12014	3375-7
MC12015	891-12
MC12015	3376-77
MC12016	891-15
MC12016	3376-80
MC12017	891-25
MC12017	3376-85
MC12018	891-40
MC12018	3376-88
MC12019	848-42
MC12019	3376-76
MC12022	891-39
MC12022	3376-90
MC12023	891-29
MC12023	3375-84
MC12040	3375-67
MC12060	¶ 423-3
MC12061	3375-8
	¶ 423-3
MC12071	891-30
MC12071	3375-76
MC12071	3376-81
MC12073	891-28
MC12073	3375-83
MC12074	891-54
MC12074	3375-85
MC12075	891-55
MC12075	3375-86
MC12090	890-84
MC12090	3375-88
MC12502	848-4
MC12502	3375-30
MC12509	890-94
MC12509	3376-59
MC12509	3376-62
MC12511	890-101
MC12511	3376-65
MC12513	890-110
MC12513	3376-70
MC12540	3375-68
MC12561	3375-9
MC13001	★ **3612**
	3327-8
	¶ 417-14
MC13001X	★ **3612**
	3327-9
MC13002	★ **3612**
	3327-10
MC13002X	★ **3612**
	3327-11
MC13010	★ **3612**
	3327-12
MC13014	★ **3612**
	3327-13
MC13020	★ **3614**
	3321-18
MC13024	★ **3613**
	3325-160
	3327-142
MC13030	3327-14
MC1309	★ **3614**
	3322-109
MC1310	★ **3614**
	3322-110
MC1327	3324-126
MC1330	¶ 418-1
MC1330	¶ 418-2
MC1330A1	★ **3612**
	3327-15
MC1330A2	★ **3612**
	3327-16
MC1349	★ **3612**
	3327-17
MC1350	★ **3612**
MC1350	★ **3613**
	3321-132
	3327-18
	¶ 418-1
	¶ 418-2
MC1352	★ **3612**
	3327-19
	¶ 418-1
	¶ 418-2
MC1353	¶ 418-1
MC1353	¶ 418-2
MC1355	★ **3613**
	3319-96
	3322-1
MC1357	★ **3613**
	3322-2
MC1358	★ **3613**
	3322-3
	3326-36
MC1372	★ **1661**
MC1372	★ **3613**
	3327-20
	3327-123
	¶ 363-13
	¶ 364-3
	¶ 373-1
MC1373	★ **3613**
	3327-21
	3327-124
MC1374	★ **3613**
	3325-159
	¶ 417-6
MC1376	★ **3613**
	3322-73
MC1377	★ **3613**
	3324-127
	¶ 428-4
MC1378	★ **3613**
	3325-62
MC1391	★ **3613**
	3325-119
MC1393	3326-123
MC1394	★ **3613**
	3325-120
MC1399	3324-128
MC1400-10	★ **3628**
	3403-41
MC1400-2	★ **3628**
	3402-56
MC1400-5	★ **3628**
	3402-107
MC1400-6	★ **3628**
	3402-140
MC14000UBA	★ **1123**
	826-177
MC14000UBC	★ **1123**
	826-178
MC14001BA	★ **1122**
	827-157
MC14001BC	★ **1122**
	827-158
MC14001UBA	★ **1122**
	827-159
MC14001UBC	★ **1122**
	827-160
MC14002BA	★ **1123**
	827-34
MC14002BC	★ **1123**
	827-35
MC14002UBA	★ **1123**
	827-36
MC14002UBC	★ **1123**
	827-37
MC14006BA	★ **1128**
	836-179
	★ **1128**
	3855-64
MC14006BC	★ **1128**
	836-180
	★ **1128**
	3855-63
MC14007UBA	★ **1124**
	810-157
MC14007UBC	★ **1124**
	810-158
MC14008BA	★ **1132**
	806-58
MC14008BC	★ **1132**
	806-59
MC1400A	★ **3628**
MC14011BA	★ **1122**
	825-86
MC14011BC	★ **1122**
	825-87
MC14011UBA	★ **1122**
	825-88
MC14011UBC	★ **1122**
	825-89
MC14012BA	★ **1122**
	824-144
MC14012BC	★ **1122**
	824-145
MC14012UBA	★ **1122**
	824-146
MC14012UBC	★ **1122**
	824-147
MC14013BA	★ **1126**
	820-53
MC14013BC	★ **1126**
	820-54
MC14014BA	★ **1128**
	836-123
	★ **1128**
	3856-27
MC14014BC	★ **1128**
	836-124
MC14015BA	★ **1129**
	834-160
	★ **1129**
	3855-42
MC14015BC	★ **1129**
	834-161
	★ **1129**
	3855-35
MC14016BA	★ **1130**
	2824-31
MC14016BC	★ **1130**
	2824-32
MC14017BA	★ **1128**
	814-91
MC14017BC	★ **1128**
	814-92
MC14018BA	★ **1128**
	816-99
MC14018BC	★ **1128**
	816-100
MC14020BA	★ **1128**
	813-184
MC14020BC	★ **1128**
	813-185
MC14021BA	★ **1128**
	835-120
	★ **1128**
	3856-28
MC14021BC	★ **1128**
	835-121
	★ **1128**
	3856-16
MC14022BA	★ **1128**
	816-74
MC14022BC	★ **1128**
	816-75
MC14023BA	★ **1122**
	825-19
MC14023BC	★ **1122**
	825-20
MC14023UBA	★ **1122**
	825-21
MC14023UBC	★ **1122**
	825-22
MC14024BA	★ **1128**
	813-54
MC14024BC	★ **1128**
	813-55
MC14025BA	★ **1122**
	827-87
MC14025BC	★ **1122**
	827-88
MC14025UBA	★ **1122**
	827-89
MC14025UBC	★ **1122**
	827-90
MC14027BA	★ **1126**
	823-37
MC14027BC	★ **1126**
	823-38
MC14028BA	★ **1130**
	817-33
MC14028BC	★ **1130**
	817-34
MC14029BA	★ **1127**
	816-118
MC14029BC	★ **1127**
	816-119
MC1403	★ **3628**
	3402-57
MC14032BA	★ **1132**
	806-21
MC14032BC	★ **1132**
	806-22
MC14034BA	★ **1128**
	835-140
	★ **1128**
	3855-106
MC14034BC	★ **1128**
	835-141
	★ **1128**
	3855-99
MC14035BA	★ **1128**
	835-65
	★ **1128**
	3855-15
MC14035BC	★ **1128**
	835-66
	★ **1128**
	3855-5
MC14038BA	★ **1132**
	806-10
MC14038BC	★ **1132**
	806-11
MC1403A	★ **3628**
	3402-58
MC1404-10	★ **3628**
	3403-42
MC1404-5	★ **3628**
	3402-108
MC1404-6	★ **3628**
	3402-141
MC14040BA	★ **1128**
	813-142

Arranged alphanumerically from left to right.

ADVERTISERS' PRODUCT INDEX

Motorola Semiconductor Products (Cont'd)

Device	Page-Line
MC14040BC	★ 1128
	813-143
MC14042BA	★ 1126
	829-36
MC14042BC	★ 1126
	829-37
MC14043BA	★ 1126
	829-72
MC14043BC	★ 1126
	829-73
MC14044BA	★ 1126
	829-55
MC14044BC	★ 1126
	829-56
MC14046BA	837-114
MC14046BA	3375-46
MC14046BC	837-115
MC14046BC	3375-47
MC14049UBA	★ 1124
	809-34
MC14049UBC	★ 1124
	809-35
MC1404A-10	★ 3628
	3403-43
MC14050BA	★ 1124
	809-78
MC14050BC	★ 1124
	809-79
MC14051BA	★ 1130
	2830-109
MC14051BC	★ 1130
	2830-110
MC14052BA	★ 1130
	2830-9
MC14052BC	★ 1130
	2830-10
MC14053BA	★ 1130
	2826-41
MC14053BC	★ 1130
	2826-42
MC1406	★ 3630
	2849-41
MC14060B	★ 1128
	814-27
MC14066BA	★ 1130
	2824-4
MC14066BC	★ 1130
	2824-5
MC14067BA	833-73
MC14067BA	2831-55
MC14067BC	833-74
MC14067BC	2831-56
MC14068BA	★ 1122
	825-173
MC14068BC	★ 1122
	825-174
MC14069UBA	★ 1124
	811-58
MC14069UBC	★ 1124
	811-59
MC14070BA	★ 1123
	828-60
MC14070BC	★ 1123
	828-61
MC14071BA	★ 1122
	826-158
MC14071BC	★ 1122
	826-159
MC14072BA	★ 1122
	826-72
MC14072BC	★ 1122
	826-73
MC14073BA	★ 1122
	824-28
MC14073BC	★ 1122
	824-29
MC14075BA	★ 1122
	826-109
MC14075BC	★ 1122
	826-110
MC14076BA	★ 1126
	820-160
MC14076BC	★ 1126
	820-161
MC14077BA	★ 1123
	828-118
MC14077BC	★ 1123
	828-119
MC14078BA	★ 1123
	828-3
MC14078BC	★ 1123
	828-4
MC1408-6	★ 3630
	2855-2
MC1408-7	★ 3630
	2854-43
MC1408-8	★ 3630
	2853-3
MC14081BA	★ 1122
	824-85
MC14081BC	★ 1122
	824-86
MC14082BA	★ 1122
	823-178
MC14082BC	★ 1122
	823-179
MC14093B	¶ 361-12
MC14093BA	★ 1125
	838-164
MC14093BC	★ 1125
	838-165
MC14094BA	★ 1129
	835-165
	★ 1129
	3856-77
MC14094BC	★ 1129
	835-166
	★ 1129
	3856-78
MC14097BA	833-160
MC14097BA	2830-201
MC14097BC	833-161
MC14097BC	2830-202
MC14099BA	★ 1126
	831-13
MC14099BC	★ 1126
	831-14
MC1411	★ 3212
	2894-104
	★ 3212
	3310-109
MC1412	★ 3212
	2894-123
	★ 3212
	3310-110
MC1413	★ 3212
	2894-76
	★ 3212
	3310-111
MC1414	3314-24
MC1416	★ 3212
	2894-57
	★ 3212
	3310-112
MC14160BA	★ 1127
	815-11
MC14160BC	★ 1127
	815-12
MC14161BA	★ 1127
	812-21
MC14161BC	★ 1127
	812-22
MC14162BA	★ 1127
	814-145
MC14162BC	★ 1127
	814-146
MC14163BA	★ 1127
	811-158
MC14163BC	★ 1127
	811-159
MC14174BA	★ 1126
	821-33
MC14174BC	★ 1126
	821-34
MC14175BA	★ 1126
	820-120
MC14175BC	★ 1126
	820-121
MC14194BA	★ 1128
	835-52
	★ 1128
	3855-20
MC14194BC	★ 1128
	835-53
MC142100	★ 3633
	2829-16
	★ 3633
	3378-9
MC142101	★ 3633
MC142103	★ 3633
MC143403	★ 3618
	3374-19
MC143404	★ 3618
	3374-18
MC1436	★ 3616
	3331-92
	3357-46
MC1436C	★ 3616
	3331-103
	3357-92
MC1437	★ 3617
	3368-3
MC1439	★ 3615
	3356-28
MC14400	★ 3633
	3379-45
MC14401	★ 3633
	3379-46
MC14402	★ 3633
	3379-47
MC14403	★ 3633
	3377-91
	3379-48
MC14405	★ 3633
	3377-92
	3379-49
MC14407	★ 3633
MC14408	★ 3633
	3378-86
MC14409	★ 3633
	3378-87
MC14410	★ 3633
	3382-79
MC14411	★ 3633
	837-55
	★ 3633
	2900-24
MC144110	★ 3630
	2849-21
MC144111	★ 3630
	2849-22
MC14412	★ 3633
	3380-66
	¶ 428-7
MC14413-1	★ 3633
	3379-68
MC14413-2	★ 3633
	3379-69
MC14414-1	★ 3633
	3379-70
MC14414-2	★ 3633
	3379-71
MC14415	838-137
MC14415E	838-138
MC14416	★ 3633
	3381-102
MC14417	★ 3633
	3381-103
MC14418	★ 3633
	3381-104
MC14419	★ 3633
	842-51
	¶ 437-18
	★ 3633
	2880-4
	★ 3633
	3379-42
MC14433	★ 3629
	2848-19
	¶ 364-17
	¶ 387-12
MC14442	★ 3629
	2834-50
MC14443	★ 3629
	2837-38
MC14444	★ 3629
	2837-37
MC14447	★ 3629
	2837-39
MC1445	3307-104
MC14457	★ 3632
	3323-33
MC14458	★ 3632
	3323-34
MC14460	3319-138
MC14466	3328-13
MC14467	3328-14
MC14469	★ 3632
	837-47
	★ 3632
	2900-14
MC14490	839-7
MC14490E	839-8
MC14495	★ 1130
	819-128
	★ 1130
	2875-30
MC14497	★ 3632
	3323-26
MC145000	★ 1131
	2875-21
MC145001	★ 1131
	2875-22
MC14500B	837-46
	¶ 380-2
	1449-127
MC14501UBA	★ 1124
	828-133
MC14501UBC	★ 1124
	828-134
MC145026	★ 3632
	3323-35
MC145027	★ 3632
	3323-36
MC145028	★ 3632
	3323-37
MC145029	★ 3632
	3323-38
MC14502BA	★ 1124
	809-7
MC14502BC	★ 1124
	809-8
MC14503BA	★ 1124
	809-169
MC14503BC	★ 1124
	809-170
MC145040	★ 3629
	2834-52
MC145041	★ 3629
	2834-53
MC14504BA	★ 1123
MC14504BA	★ 1124
	837-40
MC14504BC	★ 1123
MC14504BC	★ 1124
	837-41
MC14506BA	826-30
MC14506BC	826-31
MC14508BA	★ 1126
	829-5
MC14508BC	★ 1126
	829-6
MC145100	★ 3633
	2829-17
	★ 3633
	3378-10
MC145106	3375-113
MC14510BA	★ 1127
	815-58
MC14510BC	★ 1127
	815-59
MC14511	¶ 398-9
MC14511BA	★ 1130
	819-152
	★ 1130
	2875-151
MC14511BC	★ 1130
	819-153
	★ 1130
	2875-152
MC14512A	★ 1129
	833-59
MC14512C	★ 1129
	833-60
MC14513BA	★ 1130
	819-154
	★ 1130
	2875-153
MC14513BC	★ 1130
	819-155
	★ 1130
	2875-154
MC145145	3375-114
MC145146	3375-115
MC14514BA	★ 1130
	818-182
MC14514BC	★ 1130
	818-183
MC145151	3375-116
MC145152	3375-117
MC145155	3375-118
MC145156	3375-119
MC145157	3375-120
MC145158	3375-121
MC145159	3375-122
MC14515BA	★ 1130
	818-184
MC14515BC	★ 1130
	818-185
MC14516BA	★ 1127
	812-93
MC14516BC	★ 1127
	812-94
MC14517BA	★ 1128
	835-12
	★ 1128
	3857-11
MC14517BC	★ 1128
	835-13
	★ 1128
	3857-8
MC14518BA	★ 1127
	815-185
MC14518BC	★ 1127
	815-186
MC14519BA	★ 1124
MC14519BA	★ 1129
	833-18
MC14519BC	★ 1124
MC14519BC	★ 1129
	833-19
MC14520BA	★ 1127
	812-157
MC14520BC	★ 1127
	812-158
MC14521BA	★ 1131
	834-136
MC14521BC	★ 1131
	834-137
MC14522BA	★ 1128
	815-99
MC14522BC	★ 1128
	815-100
MC14526BA	★ 1128
	812-126
MC14526BC	★ 1128
	812-127
MC14527BA	★ 1132
	838-35
MC14527BC	★ 1132
	838-36
MC14528BA	★ 1131
	834-85
MC14528BC	★ 1131
	834-86
MC14529BA	★ 1130
	2830-1
	2830-84
MC14529BC	★ 1130
	2830-2
	2830-85
MC14530BA	★ 1124
	828-130
MC14530BC	★ 1124
	828-131
MC14531BA	★ 1132
	842-107
MC14531BC	★ 1132
	842-108
MC14532BA	★ 1131
	842-74
MC14532BC	★ 1131
	842-75
MC14534	¶ 356-14
MC14534BA	★ 1128
	816-67
MC14534BC	★ 1128
	816-68
MC14536BA	★ 1131
	834-112
MC14536BC	★ 1131
	834-113
MC14538BA	★ 1131
	834-56
MC14538BC	★ 1131
	834-57
MC14539BA	★ 1129
	832-4
MC14539BC	★ 1129
	832-5
MC1454	3318-31
MC145402	★ 3630
MC145402	★ 3633
	3377-156
MC145406	★ 3633
	3379-32
MC145409	★ 3633
	3378-140
MC145411	★ 3633
	3398-89
MC145412	★ 3633
MC145413	★ 3633
MC145414	★ 3633
	3379-80
MC145415	★ 3633
	3379-86
	¶ 410-11
MC145418	★ 3633
	2901-92
MC145419	2901-93
MC14541BA	★ 1131
	834-107
	★ 1131
	3383-28
MC14541BC	★ 1131
	834-108
	★ 1131
	3383-29
MC145421	★ 3633
MC145422	★ 3633
	2901-94
	★ 3633
	3382-51
MC145423	2901-95
MC145423	3382-52
MC145425	★ 3633
	3382-50
MC145426	★ 3633
	2901-96
	★ 3633
	3382-53
MC145428	★ 3633
	3378-25
MC145429	★ 3633
	3381-78
MC14543	¶ 398-9
MC145431	3379-82
MC145432	★ 3633
	3379-81
MC145433	★ 3633
	3379-83
MC145434	3379-84
MC145439	★ 3633
MC14543BA	★ 1130
	819-97
	★ 1130
	2876-2
MC14543BC	★ 1130
	819-98
	★ 1130
	2876-3
MC145440	★ 3633
	3379-100
	3380-41
	¶ 428-7
MC145441	★ 3633
	3379-101
	3380-42
MC145445	★ 3633
	3380-6
MC14544BA	★ 1130
	2875-172
MC14544BC	★ 1130
	2875-173
MC145450	★ 3633
	3380-7
	¶ 410-11
MC14547BA	★ 1130
	817-53
	★ 1130
	2875-35
MC14547BC	★ 1130
	817-54
	★ 1130
	2875-36
MC14549BA	★ 3630
	838-17
MC14549BC	★ 3630
	838-18
MC1455	3383-39
MC14551BA	★ 1130
	2826-72
MC14551BC	★ 1130
	2826-73
MC14553BA	★ 1128
	816-16
MC14553BC	★ 1128
	816-17

¶ Indicates page number in Application Note Directory.
★ Indicates additional data is provided on the page noted.

Motorola Semiconductor Products (Cont'd)

Device	Page-Line
MC14554BA	**★ 1132** 807-103
MC14554BC	**★ 1132** 807-104
MC14555BA	**★ 1130** 817-60
MC14555BC	**★ 1130** 817-61
MC14556BA	**★ 1130** 817-73
MC14556BC	**★ 1130** 817-74
MC14557BA	**★ 1128** 837-25 **★ 1128** 3857-6
MC14557BC	**★ 1128** 837-26
MC14558	**★ 1130** 2875-37
MC14559BA	838-15
MC14559BC	838-16
MC1455BC	3857-2
MC1456	**★ 3616** 3357-43
MC14560	¶ 352-13
MC14560BA	**★ 1132** 806-7
MC14560BC	**★ 1132** 806-8
MC14561	¶ 352-13
MC14561BA	**★ 1132** 808-57
MC14561BC	**★ 1132** 808-58
MC14562BA	**★ 1129** 837-30 **★ 1129** 3856-114
MC14562BC	**★ 1129** 837-31 **★ 1129** 3856-113
MC14566BA	816-91
MC14566BC	816-92
MC14568BA	816-95
MC14568BA	3375-33
MC14568BC	816-96
MC14568BC	3375-34
MC14569BC	**★ 1128** 816-137
MC1456C	**★ 3616** 3357-94
MC14572A	**★ 1124** 828-136
MC14572C	**★ 1124** 828-137
MC14573	837-61
MC14573	3374-17
MC14574	837-60
MC14574	3316-59
MC14575	837-64
MC14575	3315-20
MC14575	3315-21
MC1458	**★ 3617** 3330-4 3367-10
MC14580BA	831-59
MC14580BA	3830-105
MC14580BC	831-60
MC14580BC	3830-106
MC14581BA	**★ 1132** 806-176
MC14581BC	**★ 1132** 806-177
MC14582BA	**★ 1132** 807-18
MC14582BC	**★ 1132** 807-19
MC14583B	¶ 361-12
MC14583BA	**★ 1125** 838-52
MC14583BC	**★ 1125** 838-53
MC14584B	¶ 361-12
MC14584BA	**★ 1125** 839-39
MC14584BC	**★ 1125** 839-40
MC14585BA	**★ 1131** 807-56
MC14585BC	**★ 1131** 807-57
MC1458C	**★ 3617** 3368-28
MC1458S	**★ 3617** 3367-42
MC14597BA	**★ 1126** 831-31 **★ 1126** 1449-128
MC14597BC	**★ 1126** 831-32 **★ 1126** 1449-129
MC14598BA	**★ 1126** 830-167 **★ 1126** 1449-130
MC14598BC	**★ 1126** 830-168 **★ 1126** 1449-131
MC14599BA	**★ 1126** 830-165 **★ 1126** 1450-1
MC14599BC	**★ 1126** 830-166 **★ 1126** 1450-2
MC1466	**★ 3627** 3394-46
MC1468	**★ 3627** 3392-77 3395-41 3395-43
MC146805	**★ 1668**
MC146805E2	1454-69 ¶ 364-2 ¶ 367-19 ¶ 374-6 1423-4
MC146805E3	1454-55
MC146805E3	1423-5
MC146805F2	1454-12 ¶ 364-2 ¶ 369-6 1423-6
MC146805G2	1454-13 ¶ 364-2 ¶ 364-10 1423-7
MC146805G2L1	¶ 380-14
MC146805H2	1423-8
MC146818	**★ 1663** 1454-146 ¶ 371-8
MC146818A	**★ 1663** 1454-147
MC146823	**★ 1663** 1455-52 ¶ 371-8
MC1468705F2	**★ 1668** 1454-22 **★ 1668** 1423-9
MC1468705F5	1423-10
MC1468705G2	**★ 1668** 1454-11 ¶ 375-9 **★ 1668** 1423-11
MC1472	**★ 3212** 2897-59
MC1488	**★ 3211**
MC1488	**★ 3212** 2881-43 ¶ 398-11
MC1489	**★ 3211**
MC1489	**★ 3212** 2885-20 ¶ 398-11
MC1489A	**★ 3211**
MC1489A	**★ 3212** 2885-29
MC1494	3400-132
MC1495	3400-133
MC1496	3398-74
MC1500-10	**★ 3628** 3403-44
MC1500-2	**★ 3628** 3402-59
MC1500-5	**★ 3628** 3402-109
MC1500-6	**★ 3628** 3402-142
MC1500A	**★ 3628**
MC1503	**★ 3628** 3402-60
MC1503A	**★ 3628** 3402-61
MC1504-10	3403-45
MC1504-5	3402-110
MC1504-6	3402-143
MC1504A-10	3403-46
MC1506	**★ 3630** 2849-42
MC1508-8	**★ 3630** 2853-4
MC1514	3313-46
MC1536	**★ 3616** 3331-82 3352-37
MC1536R	**★ 3616** 3395-4
MC1537	**★ 3617** 3366-26
MC1538	3306-38
MC1539	**★ 3615** 3346-227
MC1545	3307-105 ¶ 410-1
MC1554	3318-32
MC1555	3383-40
MC1556	**★ 3616** 3350-12
MC1558	**★ 3617** 3366-11
MC1558S	**★ 3617** 3365-46
MC1566	**★ 3627** 3394-47
MC1568	**★ 3627** 3392-78 3395-42 3395-44
MC1590	3306-54
MC1590G	¶ 409-9
MC1594	3400-134
MC1595	3400-135
MC1596	3398-75
MC1648	**★ 1131** 850-1 **★ 1131** 3376-10
MC1648M	**★ 1131** 850-2 **★ 1131** 3376-11
MC1650	850-4 ¶ 358-4
MC1651	850-5
MC1654	**★ 1127** 849-92
MC1658	**★ 1131** 849-111 **★ 1131** 3376-12
MC1660	**★ 1123** 849-102 ¶ 358-8
MC1661	¶ 358-8
MC1662	**★ 1122** 849-101 ¶ 358-8
MC1663	¶ 358-8
MC1664	**★ 1122** 849-100 ¶ 358-8
MC1665	¶ 358-8
MC1666	**★ 1127** 849-99
MC1668	**★ 1127** 849-110
MC1670	**★ 1127** 849-94
MC1672	**★ 1123** 849-108
MC1674	**★ 1123** 849-109
MC1678	**★ 1127** 849-75
MC1688	**★ 1123** 849-107
MC1690	**★ 1127** 849-98
MC1692	**★ 1131** 850-7 ¶ 358-4
MC1694	**★ 1128** 849-113 **★ 1128** 3855-30
MC1697	**★ 1128** 849-76
MC1699	**★ 1128** 849-77
MC1709	**★ 3615** 3354-10
MC1709A	**★ 3615** 3346-228
MC1709C	**★ 3615** 3356-39
MC1723	**★ 3625** 3393-118
MC1723C	**★ 3625** 3393-119
MC1733	**★ 3616** 3307-153 ¶ 394-13
MC1733C	**★ 3616** 3307-154
MC1741	**★ 3616** 3330-23 3353-43
MC1741C	**★ 3616** 3355-29
MC1741S	**★ 3616** 3354-5
MC1741SC	**★ 3616** 3355-43
MC1747	**★ 3617** 3366-12
MC1747C	**★ 3617** 3367-11
MC1748	**★ 3615** 3354-1
MC1748C	**★ 3615** 3355-39
MC1776	**★ 3616** 3347-15 3334-30 3353-8
MC1776C	**★ 3616** 3347-23 3334-45
MC2261A	2900-70
MC2261B	2900-71
MC2261C	2900-72
MC2652	2901-11 ¶ 382-6 1464-2
MC2652-2	2901-12
MC2653	2879-10 ¶ 382-6 1464-56
MC2661	1464-4 ¶ 382-6
MC2661A	1465-42
MC2661B	1465-43
MC2661C	1465-44
MC2670	**★ 1662** 1466-67
MC2671	**★ 1662** 2880-19 **★ 1662** 1458-13
MC2672	**★ 1662** 1466-56
MC2673	**★ 1662** 1466-12
MC2674	**★ 1661** 1452-120 1465-56
MC2675	**★ 1662** 1465-64
MC2681	2900-60
MC2682	2902-2
MC26S10	**★ 3210** 888-89 **★ 3210** 2889-43
MC26S11	888-90
MC26S11	2889-44
MC2801	**★ 3613** 3325-97
MC2831	**★ 3613** 3379-88
MC3000	871-19
MC3001	869-104
MC3002	865-66
MC3003	873-50
MC3021	874-59
MC3022	874-152
MC3025	870-53
MC3026	868-174
MC3060	864-232
MC3061	867-171
MC3062	867-172
MC3100	871-20
MC3101	869-105
MC3102	865-67
MC3121	874-60
MC3122	874-153
MC3126	868-175
MC3160	864-233
MC3161	867-173
MC3162	867-174
MC3221	3316-182
MC3232A	2892-64
MC3242	¶ 437-16
MC3242A	2892-67
MC3301	**★ 3618** 3334-186
MC3302	**★ 3631** 3316-53
MC3303	**★ 3618** 3334-172
MC33030	**★ 3619** 2895-78
MC33031	**★ 3621** 3401-55
MC33063	**★ 3626** 3396-15
MC33071	3350-35
MC33071A	3346-126
MC33072	3363-82
MC33072A	3363-30
MC33074	**★ 3618** 3334-177 3371-1
MC33074A	**★ 3618** 3370-11
MC33084	3373-28
MC33084A	3371-20
MC33085	3373-31
MC33085A	3371-23
MC33171	3350-52
MC33172	3363-96
MC33174	3370-56
MC3320	**★ 3614** 3316-183
MC3321	**★ 3614** 3316-184
MC3324	**★ 3620**
MC3324	**★ 3631** 3315-16 3401-123
MC3324A	**★ 3620**
MC3324A	**★ 3631** 3315-1 3401-124
MC3325	**★ 3614** 3319-143
MC3330	3306-49
MC3333	3319-124
MC3334	**★ 3614** 3319-122
MC3340	**★ 3614** 3320-141
MC3344	**★ 3614** 3319-140 3399-99
MC3346	**★ 3614** 3309-10
MC3350	**★ 3614** 3310-29
MC3356	**★ 3613** 3379-90
MC3357	**★ 3613** 3322-101
MC3358	**★ 3617** 3368-4
MC3359	**★ 3613** 3322-50
MC3361	**★ 3613** 3322-51
MC3370	3405-130
MC3373	**★ 3613**
MC3373	**★ 3632** 3322-155
MC3386	**★ 3614** 3309-11
MC3393	**★ 3613** 3376-75
MC3396	**★ 3613** 3375-72
MC34001	**★ 3616** 3357-25
MC34001A	**★ 3616** 3346-30
MC34001B	**★ 3616** 3352-24
MC34002	**★ 3617** 3368-14
MC34002A	**★ 3617** 3362-50
MC34002B	**★ 3617** 3365-11
MC34003A	3361-31
MC34004	**★ 3618** 3373-35
MC34004B	**★ 3618** 3371-26
MC3401	**★ 3618** 3334-182
MC34010A	**★ 3633** 3379-38
MC34011A	**★ 3633** 3379-36
MC34012	**★ 3633** 3382-25
MC34012-1	**★ 3633** 3382-31
MC34012-2	**★ 3633** 3382-32
MC34012-3	**★ 3633** 3382-33
MC34013	**★ 3633** 3381-46
MC34014	**★ 3633** 3381-47
MC34015	3378-88
MC34017	**★ 3633** 3382-26
MC34018	**★ 3633** 3381-24
MC34019	3381-65
MC3403	**★ 3618** 3334-173
MC34044	2892-11
MC34046S	2892-13
MC34047S	2892-14
MC3405	3307-66
MC3405	3316-48
MC34060	**★ 3626** 3396-16
MC34061	**★ 3621** 3401-119
MC34061A	**★ 3621** 3401-120
MC34062	**★ 3621** 3401-44
MC34063	**★ 3626** 3396-17 ¶ 426-16 ¶ 427-18
MC34071	3350-36
MC34071A	3346-127
MC34072	3363-83
MC34072A	3363-31
MC34074	**★ 3618** 3334-178 3371-2
MC34074A	**★ 3618** 3370-12
MC3408	2854-52
MC34084	**★ 3618** 3373-29
MC34084A	**★ 3618** 3371-21
MC34085	**★ 3618** 3373-32
MC34085A	**★ 3618** 3371-24

Arranged alphanumerically from left to right.

ADVERTISERS' PRODUCT INDEX

Motorola Semiconductor Products (Cont'd)

Device	Page-Line
MC3410	2860-2
MC3410C	2858-23
MC34115	★ 3633
	3378-28
MC34118	★ 3633
MC34119	★ 3633
MC3412	2862-33
MC34129	★ 3633
MC3416	★ 3633
	2829-18
	¶ 401-14
MC3417	★ 3633
	3378-29
MC3418	★ 3633
	3378-30
MC3419	★ 3633
	3381-66
MC3419A	★ 3633
	3381-67
MC3419C	★ 3633
	3381-68
MC3420	★ 3626
	3396-18
MC3423	★ 3620
	3401-45
MC3424	★ 3620
MC3424	★ 3631
	3315-17
	3401-125
MC3424A	★ 3620
MC3424A	★ 3631
	3315-2
	3401-126
MC3425	3401-132
MC3425A	3401-133
MC3426	3327-136
MC3430	★ 3631
	2899-22
	★ 3631
	3315-48
MC3431	★ 3631
	2899-23
	★ 3631
	3315-49
MC3432	★ 3631
	2899-24
	★ 3631
	3315-50
MC3433	★ 3631
	2899-25
	★ 3631
	3315-51
MC3437	★ 3211
	2885-53
MC3438	2888-1
MC3440A	★ 3210
	2888-25
MC3441A	★ 3210
	2888-26
MC3442A	1455-30
MC3443A	2888-27
MC3446A	★ 3210
	2888-13
MC3447	★ 3210
	2891-10
MC3448A	★ 3210
	2888-18
MC3450	★ 3211
	2887-15
MC3452	★ 3211
	2887-18
MC3453A	★ 3211
	2884-10
MC3456	3383-80
MC3458	★ 3617
	3334-135
MC3459	2893-1
MC3466	2893-10
MC3467	3307-102
MC3468	3307-103
MC3469	2892-34
MC3469	1467-28
MC3470	3306-67
MC3470A	3306-68
MC3471	2892-35
MC3471	1467-29
MC3476	★ 3616
	3347-24
	3334-46
MC3479	2896-19
MC3480	2892-60
	¶ 437-16
	1455-31
MC3481	★ 3211
	2881-31
MC3482	2898-127
MC3482A	2898-128
MC3482A	1470-73
MC3482B	2898-129
MC3482B	1470-74
MC3484	★ 3614
	3319-128
MC3484V2	2896-101
MC3484V2	3319-135
MC3484V4	2896-102
MC3484V4	3319-136
MC3485	★ 3211
	2881-32
MC3486	★ 3211
MC3486	★ 3212
	2887-25
	¶ 398-11
MC3487	★ 3211
MC3487	★ 3212
	2884-7
	¶ 398-11
MC3488	¶ 398-11
MC3488A	★ 3212
	2881-11
MC3488B	★ 3212
	2881-10
MC3490	2877-7
MC3492	2877-60
MC3494	2877-8
MC34F19	★ 3633
	3381-69
MC34F19A	★ 3633
	3381-70
MC35001	★ 3616
	3357-23
MC35001A	★ 3616
	3346-24
MC35001B	★ 3616
	3352-12
MC35002	★ 3617
	3368-13
MC35002A	★ 3617
	3362-45
MC35002B	★ 3617
	3365-14
MC35004	★ 3618
	3373-36
MC35004A	★ 3618
	3369-35
MC35004B	★ 3618
	3371-17
MC3503	★ 3618
	3334-174
MC3505	3307-67
MC3505	3316-36
MC35060	★ 3626
	3396-19
MC35061	3401-121
MC35061A	3401-122
MC35062	★ 3621
	3401-118
MC35063	★ 3626
	3396-20
MC35071	3350-37
MC35071A	3346-128
MC35072	3363-84
MC35072A	3363-32
MC35074	★ 3618
	3334-179
	3371-3
MC35074A	★ 3618
	3370-13
MC35084	★ 3618
	3373-30
MC35084A	★ 3618
	3371-22
MC35085	★ 3618
	3373-33
MC35085A	★ 3618
	3371-25
MC3510	2860-3
MC3512	2859-89
MC3517	3378-31
MC35171	3350-53
MC35172	3363-97
MC35174	3370-57
MC3518	3378-32
MC3519	3381-71
MC3520	★ 3626
	3396-21
MC3523	★ 3620
	3401-46
MC3524	★ 3620
MC3524	★ 3631
	3315-14
	3401-127
MC3524A	★ 3620
MC3524A	★ 3631
	3315-3
	3401-128
MC3525	3401-134
MC3525A	3401-135
MC3556	3383-81
MC3558	★ 3617
	3365-45
MC3571	3372-10
MC3575	3334-71
MC3870	1453-12
MC3870	1423-12
MC3941	2876-73
MC4000	877-118
MC4001	862-83
MC4004	876-149
MC4004	3831-1
MC4005	876-150
MC4005	3831-2
MC4006	862-72
MC4007	863-1
MC4008	888-123
MC4010	887-96
MC4012	881-64
MC4012	3854-113
MC4015	864-259
MC4016	862-38
	¶ 423-6
MC4017	862-39
MC4018	862-32
MC4019	862-33
MC4021	854-38
MC4022	854-39
MC4023	862-51
MC4024	881-7
	¶ 423-6
	3376-45
MC4038	862-70
MC4039	2875-95
MC4040	862-82
MC4041	2879-17
MC4042	864-20
MC4042	2893-6
MC4043	2892-110
MC4044	887-63
	¶ 423-6
	3375-69
MC4048	862-71
MC4050	862-48
MC4056	854-2
MC4060	886-149
MC4300	877-119
MC4300	2899-1
MC4304	876-151
MC4304	3831-3
MC4305	876-152
MC4305	3831-4
MC4306	862-73
MC4307	863-2
MC4308	888-124
MC4310	887-97
MC4312	881-65
MC4312	3854-114
MC4316	862-40
	¶ 423-6
MC4317	862-41
MC4318	862-34
MC4319	862-35
MC4321	854-40
MC4322	854-41
MC4324	881-8
	¶ 423-6
	3376-46
MC4344	887-64
	¶ 423-6
	3375-70
MC4350	862-49
MC4355	860-56
MC4356	854-3
MC4558	★ 3617
	3366-4
MC4558A	★ 3617
	3366-5
MC4558C	★ 3617
	3367-24
MC4741	★ 3618
	3372-6
MC4741C	★ 3618
	3372-48
MC5410	870-109
MC54141	2876-29
MC54468	886-127
MC5491A	3856-69
MC54F00	★ 1122
	871-13
MC54F02	★ 1122
	874-15
MC54F04	★ 1124
	857-104
MC54F08	★ 1122
	869-99
MC54F10	★ 1122
	870-110
MC54F109	★ 1126
	867-121
MC54F11	★ 1122
	869-17
MC54F112	★ 1126
	868-83
MC54F113	★ 1126
	868-51
MC54F114	★ 1126
	868-117
MC54F138	★ 1130
	863-110
MC54F139	★ 1130
	863-8
MC54F151	★ 1129
	879-169
MC54F153	★ 1129
	877-135
MC54F157	★ 1129
	879-3
MC54F158	★ 1129
	878-88
MC54F160A	★ 1127
	860-158
MC54F161A	★ 1127
	858-148
MC54F162A	★ 1127
	861-8
MC54F163A	★ 1127
	859-3
MC54F168	★ 1127
	861-88
MC54F169	★ 1127
	859-134
MC54F174	★ 1126
	866-44
MC54F175	★ 1126
	864-278
MC54F181	★ 1132
	855-43
MC54F182	★ 1132
	855-103
MC54F189	877-58
MC54F190	★ 1127
	861-163
MC54F191	★ 1127
	859-172
MC54F192	★ 1127
	861-131
MC54F193	★ 1127
	860-32
MC54F194	★ 1128
	881-131
MC54F195	881-40
MC54F20	★ 1122
	870-3
MC54F240	★ 1124
	883-143
MC54F241	★ 1124
	884-26
MC54F242	★ 1124
	883-61
MC54F243	★ 1124
	883-62
MC54F244	★ 1124
	884-79
MC54F245	★ 1124
	885-89
	★ 1124
	2890-61
MC54F251	★ 1129
	880-46
MC54F253	★ 1129
	878-41
MC54F257	★ 1129
	879-42
MC54F258	★ 1129
	878-128
MC54F280	★ 1132
	889-19
MC54F283	★ 1132
	856-34
MC54F289	877-42
MC54F2960	★ 1132
	885-90
	★ 1132
	1448-103
MC54F2961	1448-110
MC54F2962	1448-111
MC54F2968	1448-99
MC54F2969	1448-122
MC54F2970	1448-125
MC54F299	882-128
MC54F32	★ 1122
	873-47
MC54F323	882-129
MC54F350	★ 1132
	843-124
MC54F352	★ 1129
	878-18
MC54F353	★ 1129
	877-101
MC54F373	★ 1126
	876-2
MC54F374	★ 1126
	867-5
MC54F378	★ 1126
	866-75
MC54F379	★ 1126
	864-322
MC54F381	★ 1132
	855-44
MC54F382	855-45
MC54F521	★ 1131
	854-102
MC54F533	★ 1126
	876-65
MC54F534	★ 1127
	866-125
MC54F537	862-150
MC54F538	863-143
MC54F539	863-64
MC54F620	★ 1125
	886-94
MC54F621	886-52
MC54F623	★ 1125
	886-95
MC54F64	★ 1123
	873-3
MC54F640	★ 1125
	885-7
MC54F643	★ 1125
	885-8
MC54F645	885-91
MC54F74	★ 1126
	864-227
MC54F86	★ 1123
	874-110
MC54GHC597	3855-65
MC54H87	888-105
MC54HC00	★ 1122
	825-54
MC54HC02	★ 1122
	827-123
MC54HC03	★ 1122
	825-129
MC54HC04	★ 1124
	811-4
MC54HC05	811-5
MC54HC08	★ 1122
	824-57
MC54HC10	★ 1122
	824-183
MC54HC107	★ 1126
	823-117
MC54HC109	★ 1126
	822-184
MC54HC11	★ 1122
	824-5
MC54HC112	★ 1126
	823-76
MC54HC113	★ 1126
	823-59
MC54HC123A	★ 1131
	834-68
MC54HC125	★ 1124
	808-79
MC54HC126	★ 1124
	808-80
MC54HC132	★ 1125
	838-146
MC54HC133	★ 1122
	825-190
MC54HC137	818-102
MC54HC138	★ 1130
	818-12
MC54HC139	★ 1130
	817-106
MC54HC14	★ 1125
	839-19
MC54HC147	★ 1131
	819-44
MC54HC151	★ 1129
	833-33
MC54HC153	★ 1129
	831-140
MC54HC154	★ 1130
	819-22
MC54HC155	817-87
MC54HC157	★ 1129
	832-64
MC54HC158	★ 1129
	832-104
MC54HC160	★ 1127
	814-170
MC54HC161	★ 1127
	811-180
MC54HC162	★ 1127
	814-121
MC54HC163	★ 1127
	811-126
MC54HC164	★ 1128
	836-40
	★ 1128
	3855-69
MC54HC165	★ 1128
	835-186
	★ 1128
	3855-73
MC54HC166	836-72
MC54HC168	812-49
MC54HC169	813-27
MC54HC173	★ 1126
	820-139
MC54HC174	★ 1126
	821-4
MC54HC175	★ 1126
	820-94
MC54HC181	★ 1132
	806-160
MC54HC190	815-128
MC54HC191	812-50
MC54HC192	★ 1127
	815-33
MC54HC193	★ 1127
	812-51
MC54HC194	★ 1128
	835-31
	★ 1128
	3854-24
MC54HC195	★ 1128
	835-96
	★ 1128
	3854-25
MC54HC20	★ 1122
	824-124
MC54HC221A	★ 1131
	834-13
MC54HC237	818-103
MC54HC239	817-107
MC54HC240	★ 1124
	839-77
	¶ 373-7
MC54HC241	★ 1124
	839-152
	¶ 373-7
MC54HC242	★ 1124
	838-85
	¶ 373-7

¶ Indicates page number in Application Note Directory.
★ Indicates additional data is provided on the page noted.

Motorola Semiconductor Products (Cont'd)

Device	Page-Line
MC54HC243	★ 1124
	838-120
	¶ 373-7
MC54HC244	★ 1124
	840-72
	¶ 373-7
MC54HC245	★ 1124
	841-127
	¶ 373-7
MC54HC251	★ 1129
	833-107
MC54HC253	★ 1129
	832-37
MC54HC257	★ 1129
	832-139
MC54HC258	832-169
MC54HC259	★ 1126
	830-175
MC54HC266	★ 1123
	828-96
MC54HC27	★ 1122
	827-62
MC54HC273	★ 1126
	821-63
MC54HC280	★ 1132
	808-37
MC54HC283	★ 1132
	806-41
MC54HC292	837-134
MC54HC294	837-135
MC54HC298	833-4
MC54HC299	★ 1129
	836-152
MC54HC30	★ 1122
	825-151
MC54HC32	★ 1122
	826-133
MC54HC354	★ 1130
	833-108
MC54HC356	★ 1130
	833-109
MC54HC36	827-124
MC54HC365	★ 1124
	809-122
MC54HC366	★ 1124
	809-191
MC54HC367	★ 1124
	809-123
MC54HC368	★ 1124
	809-192
MC54HC373	★ 1126
	829-125
MC54HC374	★ 1126
	822-65
MC54HC386	828-30
MC54HC390	★ 1127
	815-165
MC54HC393	★ 1127
	812-144
MC54HC4002	★ 1123
	827-10
MC54HC4015	834-150
MC54HC4016	★ 1130
	2824-42
MC54HC4017	★ 1128
	814-73
MC54HC4020	★ 1128
	813-167
MC54HC4024	813-36
MC54HC4040	★ 1128
	813-124
MC54HC4046A	837-102
MC54HC4046A	3375-48
MC54HC4049	★ 1124
	809-21
MC54HC4050	★ 1124
	809-65
MC54HC4051	★ 1130
	2830-111
MC54HC4052	★ 1130
	2830-11
MC54HC4053	★ 1130
	2826-43
MC54HC4060	★ 1128
	814-13
MC54HC4066	★ 1130
	2824-6
MC54HC4075	★ 1122
	826-86
MC54HC4078	★ 1123
	827-190
MC54HC42	★ 1130
	817-11
MC54HC423A	834-14
MC54HC4316	2824-43
MC54HC4351	2830-112
MC54HC4352	2830-12
MC54HC4353	2826-44
MC54HC4511	★ 1130
	819-131
MC54HC4514	★ 1130
	818-157
MC54HC4515	818-158
MC54HC4518	815-170
MC54HC4538	★ 1131
	834-15
MC54HC4543	★ 1130
	819-85
	★ 1130
	2876-4
MC54HC51	826-48
MC54HC533	★ 1126
	830-52
MC54HC534	★ 1127
	821-152
MC54HC540	★ 1125
	810-58
MC54HC541	★ 1125
	810-59
MC54HC550	837-98
MC54HC551	837-94
MC54HC563	★ 1126
	830-53
MC54HC564	★ 1127
	821-153
MC54HC573	★ 1126
	829-126
MC54HC574	★ 1127
	822-66
MC54HC58	826-22
MC54HC589	836-114
MC54HC589	3855-66
MC54HC590	813-106
MC54HC592	813-98
MC54HC593	813-99
MC54HC595	836-100
MC54HC595	3855-70
MC54HC597	836-92
MC54HC620	841-36
MC54HC623	841-37
MC54HC640	★ 1125
	841-38
MC54HC643	★ 1125
	841-39
MC54HC646	★ 1125
	840-157
MC54HC648	★ 1125
	840-111
MC54HC651	840-112
MC54HC652	840-158
MC54HC658	837-86
MC54HC659	837-87
MC54HC664	841-12
MC54HC665	841-13
MC54HC688	★ 1131
	806-133
MC54HC73	★ 1126
	823-118
MC54HC7373	828-161
MC54HC74	★ 1126
	820-22
MC54HC75	★ 1126
	830-141
MC54HC7533	828-162
MC54HC7563	828-163
MC54HC7573	828-164
MC54HC76	★ 1126
	822-185
MC54HC7793	829-97
MC54HC7873	828-152
MC54HC793	830-163
MC54HC85	★ 1131
	807-33
MC54HC86	★ 1123
	828-31
MC54HC873	828-154
MC54HC9000	838-24
MC54HC9014	810-151
MC54HC9015	808-73
MC54HC9034	810-145
MC54HC9035	808-67
MC54HC9114	810-153
MC54HC9115	808-75
MC54HC9134	810-149
MC54HC9135	808-71
MC54HC9373	828-159
MC54HC9533	828-165
MC54HC9563	828-166
MC54HC9573	828-167
MC54HC9616	3856-97
MC54HCT00	825-72
MC54HCT03	825-138
MC54HCT04	811-31
MC54HCT05	811-32
MC54HCT125	808-94
MC54HCT126	808-95
MC54HCT138	818-47
MC54HCT157	832-85
MC54HCT158	832-120
MC54HCT166	836-84
MC54HCT240	839-105
MC54HCT241	839-188
MC54HCT244	839-189
MC54HCT245	841-160
MC54HCT34	811-33
MC54HCT373	829-175
MC54HCT374	822-114
MC54HCT533	830-94
MC54HCT534	821-193
MC54HCT540	810-97
MC54HCT541	810-98
MC54HCT550	837-100
MC54HCT551	837-96
MC54HCT620	841-53
MC54HCT623	841-54
MC54HCT640	841-81
MC54HCT643	842-7
MC54HCT651	840-132
MC54HCT652	840-179
MC54HCT658	837-90
MC54HCT659	837-91
MC54HCT664	841-16
MC54HCT665	841-17
MC54HCT9034	810-147
MC54HCT9035	808-69
MC54HCU04	811-83
MC55107	2886-20
MC55108	2886-26
MC6108A	★ 3629
	2834-2
MC6170	3380-43
MC6172	★ 3633
	3379-19
	¶ 410-9
MC6173	★ 3633
	3380-73
	¶ 410-9
MC6190	3324-46
MC6190	3326-124
MC6191	3324-47
MC6191	3326-125
MC6192	3324-48
MC6192	3326-126
MC6193	3324-49
MC6193	3326-127
MC6194	3324-50
MC6194	3326-128
MC6195	3324-51
MC6195	3375-123
MC6196	3324-52
MC6196	3375-124
MC6482	857-41
MC6482A	857-42
MC6482B	857-43
MC660	852-54
MC661	852-55
MC662	852-37
MC663	852-49
MC664	852-50
MC665	853-1
MC666	853-2
MC667	852-96
MC668	852-61
MC669	852-88
MC670	852-59
MC671	852-60
MC672	852-62
MC673	852-79
	¶ 420-16
MC674	852-80
MC675	853-7
MC676	852-28
MC676	2877-64
MC677	852-12
MC678	852-9
MC680	852-4
MC6800	★ 1660
	1454-62
	¶ 364-17
	¶ 371-8
	¶ 374-17
	¶ 377-9
	¶ 377-16
	¶ 382-7
	★ 1660
	1423-13
MC68000	¶ 365-14
MC68000	¶ 370-13
MC68000	¶ 370-15
MC68000	¶ 372-3
MC68000	¶ 372-16
MC68000	¶ 382-6
MC68000	¶ 440-8
MC68000-10	★ 1654
MC68000-10	★ 1905
MC68000-10	★ 2109
	1463-121
MC68000-12	★ 1654
MC68000-12	★ 1905
MC68000-12	★ 2109
	1463-122
MC68000-8	★ 1654
MC68000-8	★ 1905
MC68000-8	★ 2109
	1463-123
MC68000L10	★ 1654
	1439-1
MC68000L12	★ 1654
	1439-2
MC68000L20	★ 1654
MC68000L8	1439-3
MC68008	★ 1654
	1463-130
	★ 1654
	1423-14
MC68009	¶ 376-13
MC6801	★ 1664
MC6801	★ 1905
	1453-144
	¶ 363-13
	¶ 367-3
	¶ 370-12
	★ 1664
	★ 1905
	1423-15
MC6801-1	★ 1664
MC6801-1	★ 1905
	1453-145
	★ 1664
	★ 1905
	1423-16
MC68010	★ 1654
MC68010	★ 1905
MC68010	★ 2109
	1463-133
	★ 1654
	★ 1905
	★ 2109
	1439-4
MC68012	★ 1654
MC6801C	★ 1664
MC6801C	★ 1905
	1453-146
MC6801U4	★ 1666
	1453-147
	★ 1666
	1423-17
MC6801U4-1	★ 1666
	1453-148
	★ 1666
	1423-18
MC6802	★ 1660
	1454-100
	★ 1660
	1423-19
MC68020	★ 1654
MC68020	★ 1905
MC68020	★ 2109
MC68020	★ 2110
	1465-8
	¶ 366-6
	¶ 369-10
	★ 1654
	★ 1905
	★ 2109
	★ 2110
	1439-11
MC6802NS	★ 1660
	1454-101
MC6803	★ 1666
	1454-39
	¶ 370-12
	★ 1666
	1423-20
MC6803-1	★ 1666
	1454-40
MC6803C	★ 1666
	1454-41
MC6803E	★ 1666
	1454-42
	★ 1666
	1423-21
MC6803U4	★ 1666
	1453-157
	★ 1666
	1423-22
MC6803U4-1	★ 1666
	1453-149
	★ 1666
	1423-23
MC6804	★ 1664
MC6804	★ 1669
MC6804J1	1454-3
MC6804J1	1423-24
MC6804J2	1454-4
MC6804J2	1423-25
MC6804P2	1454-5
MC6804P2	1423-26
MC6805	★ 1664
MC6805	★ 1667
MC6805	★ 1905
	¶ 363-17
	¶ 413-14
MC6805H2	1454-54
MC6805K2	1454-1
MC6805K2	1423-27
MC6805K3	1454-2
MC6805K3	1423-28
MC6805P2	1453-161
MC6805P2	1423-29
MC6805P4	1453-162
MC6805P4	1423-30
MC6805P6	1453-163
MC6805P6	1423-31
MC6805R2	1454-46
	¶ 370-3
	1423-32
MC6805R2-1	¶ 364-7
MC6805R3	1454-49
MC6805R3	1423-33
MC6805S2	1453-165
	¶ 370-3
	1423-34
MC6805S3	1453-166
MC6805S3	1423-35
MC6805T2	1454-9
	¶ 363-15
	1423-36
MC6805U2	1453-164
MC6805U2	1425-1
MC6805U3	1454-47
MC6805U3	1425-2
MC6808	★ 1660
	1454-108
	★ 1660
	1425-3
MC6809	★ 1660
MC6809	★ 1905
	1454-90
	¶ 364-3
	¶ 370-1
	¶ 370-4
	¶ 370-11
	¶ 371-2
	¶ 371-8
	¶ 380-9
	★ 1660
	★ 1905
	1425-4
MC6809E	★ 1660
MC6809E	★ 1905
	1454-75
	¶ 363-8
	¶ 366-7
	¶ 370-1
	¶ 370-4
	¶ 380-15
	★ 1660
	★ 1905
	1425-5
MC681	852-10
MC68120	★ 1656
MC68120	★ 1663
	1464-34
	¶ 366-7
	¶ 380-15
	★ 1656
	★ 1663
	1425-6
MC68121	★ 1656
MC68121	★ 1663
	1464-35
	¶ 365-8
	★ 1656
	★ 1663
	1425-7
MC68153	1463-137
MC68153	1469-103
MC68184	★ 1658
	1463-135
	1458-31
MC68194	★ 1658
	1463-140
	1458-32
MC682	852-93
MC6821	★ 1663
	1455-53
	1469-130
	¶ 380-3
MC6822	★ 1663
	1455-29
MC68230	¶ 372-8
MC68230	¶ 372-16
MC68230-12	★ 1656
	1464-50
MC68230L10	★ 1656
	1464-51
MC68230L8	★ 1656
	1464-52
MC6828	1470-11
MC6828	1469-147
MC6829	★ 1662
	1455-33
	¶ 380-9
MC683	852-87
MC6835	1454-157
MC6839	★ 1662
	1455-17
MC684	852-20
MC6840	★ 1663
	1470-22
MC6840M	★ 1663
	1470-23
MC6843	1455-22
MC6844	★ 1662
	1455-10
	¶ 365-8
	¶ 370-11
	¶ 371-2
MC68440	★ 1656
	1464-21
	1469-39
MC68442	1464-20
MC6844M	★ 1662
	1455-11
MC6845	★ 1661
	1465-69

Arranged alphanumerically from left to right.

ADVERTISERS' PRODUCT INDEX

Motorola Semiconductor Products (Cont'd)

Device	Page-Line
MC68450	★ **1656**
	1464-18
MC68451	★ **1656**
	1464-40
	¶ 435-8
MC68452	★ **1656**
	1463-136
	1465-32
MC68454	★ **1657**
	1464-10
MC6845R1	1454-158
MC6846	★ **1662**
	1470-34
MC6847	★ **1661**
	3327-121
	¶ 363-13
	¶ 364-3
	¶ 373-1
	★ **1661**
	1470-65
	1464-61
	1466-29
MC68478	1470-66
MC6847Y	★ **1661**
	1464-62
MC68486	★ **1661**
	1464-8
	1465-102
MC68487	★ **1661**
	1464-9
	1465-103
MC68488	¶ 370-11
MC685	852-16
MC6850	★ **1663**
	2900-6
	¶ 370-13
	¶ 395-9
	★ **1663**
	1454-131
	1469-92
MC6852	★ **1663**
	2901-38
	★ **1663**
	1470-55
	1469-156
MC6854	★ **1663**
	1454-117
MC6855	1455-14
MC68562	★ **1657**
	1464-6
MC6859	890-69
MC6859	1455-4
MC68590	★ **1657**
	1464-28
	1466-101
MC686	852-101
MC686	3855-31
MC6860	★ **1663**
MC6860	★ **3633**
	3380-54
	¶ 395-19
	¶ 396-1
	★ **1663**
	★ **3633**
	1455-38
MC68601	1464-66
MC68605	1469-38
MC6860L	★ **1663**
MC6860L	★ **3633**
	1455-39
MC6862	3380-52
MC6862	1455-5
MC68652	★ **1657**
	2901-13
	¶ 376-13
	¶ 382-6
	★ **1657**
	1464-3
MC68652-2	★ **1657**
	2901-14
MC68653	★ **1657**
	2879-11
	¶ 382-6
	★ **1657**
	1464-57
MC68661	★ **1657**
	1464-5
	¶ 376-13
	¶ 382-6
MC68661A	★ **1657**
	2900-69
	★ **1657**
	1465-45
MC68661B	★ **1657**
	2900-81
	★ **1657**
	1465-46
MC68661C	★ **1657**
	2900-80
	★ **1657**
	1465-47
MC68681	★ **1657**
	2900-61
	¶ 370-9
	★ **1657**
	1464-67
MC6870	1454-149
MC68701	★ **1666**
	1454-23
	¶ 370-12
	¶ 374-16
	¶ 375-15
MC68701-1	★ **1666**
	1454-24
	★ **1666**
	1425-8
MC68701C	★ **1666**
	1454-25
MC68701C-1	★ **1666**
	1454-26
MC68701U4	★ **1666**
	1454-27
	¶ 375-15
	★ **1666**
	1425-9
MC68701U5	1454-28
MC68701U5	1425-10
MC68704P2	★ **1669**
	1454-29
	★ **1669**
	1425-11
MC68705	★ **1668**
MC68705P3	1454-30
	¶ 374-18
	1425-12
MC68705P5	1454-31
MC68705P5	1425-13
MC68705R3	1454-32
MC68705R3	1454-36
MC68705R3	1425-14
MC68705R5	1454-33
MC68705R5	1425-15
MC68705Rs	¶ 374-18
MC68705S3	1425-16
MC68705U3	1454-34
	¶ 363-17
	¶ 374-18
	1425-17
MC68705U5	1454-35
MC68705U5	1425-18
MC6871	1454-150
MC6875	1454-144
	¶ 377-9
	¶ 380-1
MC6875A	1454-145
MC688	852-44
	¶ 420-16
MC6880	★ **3210**
	2888-53
MC6880A	★ **3210**
	1454-141
MC6881	887-134
MC6881	1470-67
MC68824	★ **1658**
	1464-60
	1458-33
MC6882A	1470-75
MC6882B	1470-76
MC6883	877-92
MC6883	1470-47
MC6885	★ **3209**
	1470-69
MC68851	2892-104
MC68851	1465-11
MC6886	★ **3209**
	1470-70
MC6887	★ **3209**
	1470-71
MC6888	★ **3209**
	1470-72
MC68881	★ **1654**
	1465-10
MC6889	★ **3210**
	888-69
	★ **3210**
	2889-2
	★ **3210**
	1454-142
MC689	852-11
MC6890	★ **3630**
	2852-41
	¶ 371-18
	★ **3630**
	1455-2
MC68901	★ **1656**
	1464-45
	¶ 381-13
MC6890A	★ **3630**
	2852-16
	★ **3630**
	1455-3
MC68A00	1454-63
MC68A01	1453-150
MC68A01	1425-19
MC68A02	1454-102
MC68A03	1454-43
MC68A03	1425-20
MC68A08	1454-109
MC68A09	1454-91
MC68A09E	1454-76
MC68A21	1455-54
MC68A21	1469-131
MC68A35	1454-159
MC68A39	1455-18
MC68A40	1470-24
MC68A44	1455-12
MC68A45	1454-160
MC68A46	1470-35
MC68A488	1455-25
MC68A50	1454-132
MC68A50	1469-93
MC68A52	1470-56
MC68A54	1454-118
MC68B00	1454-64
MC68B01	1453-151
MC68B01	1425-21
MC68B02	1454-103
MC68B03	1454-44
MC68B03	1425-22
MC68B08	1454-110
MC68B09	1454-92
	¶ 383-1
MC68B09E	1454-77
	¶ 370-8
	¶ 383-1
MC68B21	1455-55
MC68B21	1469-132
MC68B29	1455-34
MC68B35	1454-161
MC68B39	1455-19
MC68B40	1470-25
MC68B44	1455-13
MC68B45	1454-162
MC68B46	1470-36
MC68B488	1455-26
MC68B50	1454-133
MC68B50	1469-94
MC68B52	1470-57
MC68B54	1454-119
MC68HC01	1455-35
MC68HC01	1425-23
MC68HC03	1455-36
MC68HC03	1425-24
MC68HC04	★ **1669**
MC68HC04P2	1454-14
MC68HC04P2	1425-25
MC68HC04P3	1454-15
MC68HC04P3	1425-26
MC68HC05	★ **4721**
MC68HC05C4	★ **1668**
	1454-50
	★ **1668**
	1425-27
MC68HC05C8	1454-51
MC68HC05C8	1425-28
MC68HC11	★ **1664**
MC68HC11	★ **1666**
	1425-29
MC68HC11A8	1454-56
MC68HC21	1455-56
MC68HC21	1469-133
MC68HC24	1470-10
MC68HC34	1470-29
MC68HC51	★ **1663**
	1454-134
	1469-95
MC68HC53	★ **1663**
	1454-135
MC68HC68R1	831-53
MC68HC68R2	831-54
MC68HC704P3	★ **1669**
MC690	852-5
MC691	853-5
MC693	852-71
MC693	2898-97
MC696	852-107
MC697	852-6
MC699	852-36
MC7241	874-90
MC7242	874-156
MC7250	862-74
MC7260	855-14
MC7261	854-157
MC7266	878-72
MC7267	879-69
MC7270	881-87
MC7270	3854-38
MC7271	881-94
MC7271	3854-39
MC7280	860-104
MC7281	858-77
MC7400	870-185
MC7401	871-137
MC7402	865-91
MC7403	871-138
MC7404	857-77
MC7405	857-139
MC7406	864-108
MC7407	864-88
MC7408	869-73
MC7409	869-134
MC7410	870-111
MC74100	875-4
MC74107	867-155
MC74120	887-89
MC74121	880-95
MC74122	880-113
MC74123	880-143
MC7413	887-100
MC74132	887-146
MC74136	874-63
MC7414	888-24
MC74141	2876-30
MC74145	862-99
MC74150	880-77
MC74151	879-155
MC74152	880-19
MC74153	877-120
MC74154	863-169
MC74155	863-71
MC74156	863-40
MC74157	878-161
MC7416	864-97
MC74160	860-137
MC74161	858-123
MC74162	860-181
MC74163A	858-174
MC74165	882-45
MC74165	3855-112
MC74167	887-69
MC7417	864-79
MC74174	866-27
MC74175	864-262
MC74176	860-105
MC74177	858-78
MC74180	889-3
MC74181	855-21
MC74182	855-86
MC74190	861-152
MC74191	859-159
MC74192	861-117
MC74193	860-17
MC74194	881-121
MC74194	3854-56
MC74195	881-27
MC74195	3854-87
MC74196	860-106
MC74197	858-79
MC7420	869-169
MC7423	865-14
MC7425	865-5
MC7426	864-35
MC7427	865-36
MC74290	860-61
MC74293	859-50
MC74298	879-77
MC7430	872-3
MC7437	871-49
MC7438	871-85
MC7440	870-37
MC74408	888-125
MC7442	862-119
MC7443	862-68
MC7444	862-64
MC7445	862-90
MC74452	861-59
MC74453	859-24
MC74454	862-1
MC74455	860-57
MC74456	854-4
MC7446	2875-135
MC74460	886-150
MC74468	886-128
MC74468	2899-13
MC7447	2875-110
MC7448	2875-69
MC7449	2875-45
MC7450	872-117
MC7451	872-77
MC7453	872-164
MC7454	872-157
MC7460	872-131
MC7470	867-74
MC7472	867-83
MC7473	867-156
MC7474	864-209
MC7475	875-34
MC7476	868-24
MC7477	875-62
MC7480	854-161
MC7482	855-10
MC7483	856-23
MC7485	854-51
MC7486	874-91
MC7490	860-62
MC7491	882-102
MC7491A	3856-70
MC7492	862-8
MC7493	859-51
MC7494	881-116
MC7494	3855-26
MC7495A	881-66
MC7495A	3854-112
MC7496	881-153
MC7496	3855-45
MC7497	888-111
MC74F00	★ **1122**
	871-14
MC74F02	★ **1122**
	874-16
MC74F04	★ **1124**
	857-105
MC74F08	★ **1122**
	869-100
MC74F10	★ **1122**
	870-133
MC74F109	★ **1126**
	867-122
MC74F11	★ **1122**
	869-18
MC74F112	★ **1126**
	868-84
MC74F113	★ **1126**
	868-52
MC74F114	★ **1126**
	868-118
MC74F138	★ **1130**
	863-111
MC74F139	★ **1130**
	863-9
MC74F151	★ **1129**
	879-170
MC74F153	★ **1129**
	877-136
MC74F157	★ **1129**
	879-4
MC74F158	★ **1129**
	878-89
MC74F160A	★ **1127**
	860-159
MC74F161A	★ **1127**
	858-149
MC74F162A	★ **1127**
	861-9
MC74F163A	★ **1127**
	859-4
MC74F168	★ **1127**
	861-89
MC74F169	★ **1127**
	859-135
MC74F174	★ **1126**
	866-45
MC74F175	★ **1126**
	864-279
MC74F181	★ **1132**
	855-46
MC74F182	★ **1132**
	855-104
MC74F189	877-59
MC74F190	★ **1127**
	861-164
MC74F191	★ **1127**
	859-173
MC74F192	★ **1127**
	861-132
MC74F193	★ **1127**
	860-33
MC74F194	★ **1128**
	881-132
MC74F195	881-41
MC74F20	★ **1122**
	870-4
MC74F240	★ **1124**
	883-144
MC74F241	★ **1124**
	884-27
MC74F242	★ **1124**
	883-63
MC74F243	★ **1124**
	883-64
MC74F244	★ **1124**
	884-80
MC74F245	★ **1124**
	885-92
	★ **1124**
	2890-62
MC74F251	★ **1129**
	880-47
MC74F253	★ **1129**
	878-42
MC74F257	★ **1129**
	879-43
MC74F258	★ **1129**
	878-129
MC74F280	★ **1132**
	889-20
MC74F283	★ **1132**
	856-35
MC74F289	877-43
MC74F2960	★ **1132**
	885-93
	★ **1132**
	2878-37
	★ **1132**
	1448-104
	1464-26
MC74F2961	1448-112
MC74F2962	1448-113
MC74F2968	2892-58
MC74F2968	1448-100
MC74F2969	2892-51
MC74F2969	1448-123
MC74F2970	2892-53
MC74F2970	1448-126
MC74F299	882-130
MC74F32	★ **1122**
	873-48
MC74F323	882-131
MC74F350	★ **1132**
	843-125
MC74F352	★ **1129**
	878-19
MC74F353	★ **1129**
	877-102
MC74F373	★ **1126**
	876-3
MC74F374	★ **1126**
	867-6
MC74F378	★ **1126**
	866-76
MC74F379	★ **1126**
	864-323
MC74F381	★ **1132**
	855-47

¶ Indicates page number in Application Note Directory.
★ Indicates additional data is provided on the page noted.

Motorola Semiconductor Products (Cont'd)

Device	Page-Line
MC74F382	855-48
MC74F521	★ 1131 854-103
MC74F533	★ 1126 876-66
MC74F534	★ 1127 866-126
MC74F537	862-151
MC74F538	863-144
MC74F539	863-65
MC74F620	★ 1125 886-96
MC74F621	886-53
MC74F623	★ 1125 886-97
MC74F64	★ 1123 873-4
MC74F640	★ 1125 885-9
MC74F643	★ 1125 885-10
MC74F645	885-94
MC74F74	★ 1126 864-228
MC74F86	★ 1123 874-111
MC74H87	888-106
MC74HC00	★ 1122 825-55
MC74HC02	★ 1122 827-125
MC74HC03	★ 1122 825-130
MC74HC04	★ 1124 811-6
MC74HC05	811-7
MC74HC08	★ 1122 824-58
MC74HC10	★ 1122 824-184
MC74HC107	★ 1126 823-119
MC74HC109	★ 1126 822-186
MC74HC11	★ 1122 824-6
MC74HC112	★ 1126 823-77
MC74HC113	★ 1126 823-60
MC74HC123A	★ 1131 834-69
MC74HC125	★ 1124 808-81
MC74HC126	★ 1124 808-82
MC74HC132	★ 1125 838-147
MC74HC133	★ 1122 825-191
MC74HC137	818-104
MC74HC138	★ 1130 818-13
MC74HC139	★ 1130 817-108
MC74HC14	★ 1125 839-20
MC74HC147	★ 1131 819-45
MC74HC151	★ 1129 833-34
MC74HC153	★ 1129 831-141
MC74HC154	★ 1130 819-23
MC74HC155	817-88
MC74HC157	★ 1129 832-65
MC74HC158	★ 1129 832-105
MC74HC160	★ 1127 814-171
MC74HC161	★ 1127 811-181
MC74HC162	★ 1127 814-122
MC74HC163	★ 1127 811-127

Device	Page-Line
MC74HC164	★ 1128 836-41 ★ 1128 3855-71
MC74HC165	★ 1128 835-187 ★ 1128 3855-74
MC74HC166	836-73
MC74HC168	812-52
MC74HC169	813-28
MC74HC173	★ 1126 820-140
MC74HC174	★ 1126 821-5
MC74HC175	★ 1126 820-95
MC74HC181	★ 1132 806-161
MC74HC190	815-129
MC74HC191	812-53
MC74HC192	★ 1127 815-34
MC74HC193	★ 1127 812-54
MC74HC194	★ 1128 835-32 ★ 1128 3854-26
MC74HC195	★ 1128 835-97 ★ 1128 3854-27
MC74HC20	★ 1122 824-125
MC74HC221A	★ 1131 834-16
MC74HC237	818-105
MC74HC239	817-109
MC74HC240	★ 1124 839-78
MC74HC241	★ 1124 839-153
MC74HC242	★ 1124 838-86
MC74HC243	★ 1124 838-121
MC74HC244	★ 1124 840-73
MC74HC245	★ 1124 841-128
MC74HC251	★ 1129 833-110
MC74HC253	★ 1129 832-38
MC74HC257	★ 1129 832-140
MC74HC258	832-170
MC74HC259	★ 1126 830-176
MC74HC266	★ 1123 828-97
MC74HC27	★ 1122 827-63
MC74HC273	★ 1126 821-64
MC74HC280	★ 1132 808-38
MC74HC283	★ 1132 806-42
MC74HC292	837-136
MC74HC294	837-137
MC74HC298	833-5
MC74HC299	★ 1129 836-153
MC74HC30	★ 1122 825-152
MC74HC32	★ 1122 826-134
MC74HC354	★ 1130 833-111
MC74HC356	★ 1130 833-112
MC74HC36	827-126
MC74HC365	★ 1124 809-124
MC74HC366	★ 1124 809-193
MC74HC367	★ 1124 809-125
MC74HC368	★ 1124 809-194

Device	Page-Line
MC74HC373	★ 1126 829-127
MC74HC374	★ 1126 822-67
MC74HC386	828-32
MC74HC390	★ 1127 815-171
MC74HC393	★ 1127 812-145
MC74HC4002	★ 1123 827-11
MC74HC4015	834-151
MC74HC4016	★ 1130 2824-44
MC74HC4017	★ 1128 814-74
MC74HC4020	★ 1128 813-168
MC74HC4024	813-37
MC74HC4040	★ 1128 813-125
MC74HC4046A	837-103
MC74HC4046A	3375-49
MC74HC4049	★ 1124 809-22
MC74HC4050	★ 1124 809-66
MC74HC4051	★ 1130 2830-113
MC74HC4052	★ 1130 2830-13
MC74HC4053	★ 1130 2826-45
MC74HC4060	★ 1128 814-14
MC74HC4066	★ 1130 2824-7
MC74HC4075	★ 1122 826-87
MC74HC4078	★ 1123 827-191
MC74HC42	★ 1130 817-12
MC74HC423A	834-17
MC74HC4316	2824-45
MC74HC4351	2830-114
MC74HC4352	2830-14
MC74HC4353	2826-46
MC74HC4511	★ 1130 819-132
MC74HC4514	★ 1130 818-159
MC74HC4515	818-160
MC74HC4518	815-172
MC74HC4538	★ 1131 834-18
MC74HC4543	★ 1130 819-86 ★ 1130 2876-5
MC74HC51	826-49
MC74HC533	★ 1126 830-54
MC74HC534	★ 1127 821-154
MC74HC540	★ 1125 810-60
MC74HC541	★ 1125 810-61
MC74HC550	837-99
MC74HC551	837-95
MC74HC563	★ 1126 830-55
MC74HC564	★ 1127 821-155
MC74HC573	★ 1126 829-128
MC74HC574	★ 1127 822-68
MC74HC58	826-23
MC74HC589	836-115
MC74HC589	3855-67
MC74HC590	813-107
MC74HC592	813-100
MC74HC593	813-101
MC74HC595	836-101
MC74HC595	3855-72
MC74HC597	836-93
MC74HC597	3855-68
MC74HC620	841-40
MC74HC623	841-41

Device	Page-Line
MC74HC640	★ 1125 841-42
MC74HC643	★ 1125 841-43
MC74HC646	★ 1125 840-159
MC74HC648	★ 1125 840-113
MC74HC651	840-114
MC74HC652	840-160
MC74HC658	837-88
MC74HC659	837-89
MC74HC664	841-14
MC74HC665	841-15
MC74HC688	★ 1131 806-134
MC74HC73	★ 1126 823-120
MC74HC7373	828-168
MC74HC74	★ 1126 820-23
MC74HC75	★ 1126 830-142
MC74HC7533	828-169
MC74HC7563	828-170
MC74HC7573	828-171
MC74HC76	★ 1126 822-187
MC74HC77	829-25
MC74HC7793	829-98
MC74HC7873	828-153
MC74HC793	830-164
MC74HC85	★ 1131 807-34
MC74HC86	★ 1123 828-33
MC74HC873	828-155
MC74HC9000	838-25
MC74HC9014	810-152
MC74HC9015	808-74
MC74HC9034	810-146
MC74HC9035	808-68
MC74HC9114	810-154
MC74HC9115	808-76
MC74HC9134	810-150
MC74HC9135	808-72
MC74HC9373	828-160
MC74HC9533	828-172
MC74HC9563	828-173
MC74HC9573	828-174
MC74HC9616	3856-98
MC74HCT00	825-73
MC74HCT03	825-139
MC74HCT04	811-34
MC74HCT05	811-35
MC74HCT125	808-96
MC74HCT126	808-97
MC74HCT138	818-48
MC74HCT157	832-86
MC74HCT158	832-121
MC74HCT166	836-85
MC74HCT240	839-106
MC74HCT241	839-190
MC74HCT244	840-1
MC74HCT245	841-161
MC74HCT34	811-36
MC74HCT373	829-176
MC74HCT374	822-115
MC74HCT533	830-95
MC74HCT534	821-194
MC74HCT540	810-99
MC74HCT541	810-100
MC74HCT550	837-101
MC74HCT551	837-97
MC74HCT620	841-55
MC74HCT623	841-56
MC74HCT640	841-82
MC74HCT643	842-8
MC74HCT651	840-133
MC74HCT652	840-180
MC74HCT658	837-92
MC74HCT659	837-93
MC74HCT664	841-18
MC74HCT665	841-19
MC74HCT9034	810-148
MC74HCT9035	808-70
MC74HCU04	811-84
MC75107	★ 3211 2886-21 ¶ 394-13 ¶ 398-11

Device	Page-Line
MC75108	★ 3211 2886-27
MC75110	¶ 398-11
MC75125	★ 3211 2885-57
MC75127	★ 3211 2885-58
MC75128	★ 3211 2886-5
MC75129	★ 3211 2886-6
MC75358	847-132
MC75358	2892-109
MC75452	¶ 414-1
MC75453	2897-99
MC75S110	★ 3211 2883-50
MC7805	★ 3622 3384-105
MC7805A	★ 3622 3384-106
MC7805AC	★ 3622 3384-107
MC7805C	★ 3622 3384-108
MC7806	★ 3623 3385-101
MC7806A	★ 3623 3385-102
MC7806AC	★ 3623 3385-103
MC7806C	★ 3623 3385-104
MC7808	★ 3623 3386-45
MC7808A	★ 3623 3386-46
MC7808AC	★ 3623 3386-47
MC7808C	★ 3623 3386-48
MC7812	★ 3623 3387-43
MC7812A	★ 3623 3387-44
MC7812AC	★ 3623 3387-45
MC7812C	★ 3623 3387-46
MC7815	★ 3624 3388-41
MC7815A	★ 3624 3388-42
MC7815AC	★ 3624 3388-43
MC7815C	★ 3624 3388-44
MC7818	★ 3624 3388-130
MC7818A	★ 3624 3388-131
MC7818AC	★ 3624 3389-1
MC7818C	★ 3624 3389-2
MC7824	★ 3624 3389-92
MC7824A	★ 3624 3389-93
MC7824AC	★ 3624 3389-94
MC7824C	★ 3624 3389-95
MC78L02C	3384-2
MC78L05AC	★ 3622 3384-7
MC78L05C	★ 3622 3384-8
MC78L08AC	★ 3623 3386-9
MC78L08C	★ 3623 3386-10
MC78L12AC	★ 3623 3386-109
MC78L12C	★ 3623 3386-110
MC78L15AC	★ 3624 3387-111
MC78L15C	★ 3624 3387-112
MC78L18AC	★ 3624 3388-93

Device	Page-Line
MC78L18C	★ 3624 3388-94
MC78L24AC	★ 3624 3389-53
MC78L24C	★ 3624 3389-54
MC78M05C	★ 3622 3384-38
MC78M06C	★ 3623 3385-79
MC78M08C	★ 3623 3386-20
MC78M12C	★ 3623 3386-125
MC78M15C	★ 3624 3387-127
MC78M18C	★ 3624 3388-100
MC78M20C	★ 3624 3389-27
MC78M24C	3389-63
MC78T05	★ 3622 3385-30
MC78T05A	★ 3622 3385-31
MC78T05AC	★ 3622 3385-32
MC78T05C	★ 3622 3385-33
MC78T06	★ 3623 3385-123
MC78T06C	★ 3623 3385-124
MC78T08	★ 3623 3386-65
MC78T08C	★ 3623 3386-66
MC78T12	★ 3623 3387-84
MC78T12A	★ 3623 3387-85
MC78T12AC	★ 3623 3387-86
MC78T12C	★ 3623 3387-87
MC78T15	★ 3624 3388-76
MC78T15A	★ 3624 3388-77
MC78T15AC	★ 3624 3388-78
MC78T15C	★ 3624 3388-79
MC78T18	★ 3624 3389-15
MC78T18C	★ 3624 3389-16
MC78T24	★ 3624 3389-108
MC78T24C	★ 3624 3389-109
MC7902C	★ 3622 3389-122
MC7905	★ 3622 3390-75
MC79052C	3390-63
MC7905C	★ 3622 3390-44
MC7906C	3390-96
MC7908C	3390-111
MC7912AC	3391-51
MC7912C	3391-52
MC7915AC	3391-117
MC7915C	3391-118
MC7918C	3392-17
MC7924C	3392-59
MC79L03AC	3389-126
MC79L03C	3389-127
MC79L05AC	★ 3622 3390-3
MC79L05C	★ 3622 3390-4
MC79L12AC	3391-7
MC79L12C	3391-8
MC79L15A	3391-92
MC79L15AC	3391-71
MC79L15C	3391-72
MC79L18AC	3392-18
MC79L18C	3392-6
MC79L24AC	3392-48
MC79L24C	3392-49

Arranged alphanumerically from left to right.

ADVERTISERS' PRODUCT INDEX

Motorola Semiconductor Products (Cont'd)

Device	Page-Line
MC79M05	★ 3622
	3390-14
MC79M12	3391-22
MC79M12C	3391-23
MC79M15	3391-87
MC79M15C	3391-88
MC8241	874-92
MC8242	874-157
MC8250	862-75
MC8260	855-15
MC8261	854-158
MC8266	878-73
MC8267	879-70
MC8270	881-88
MC8270	3854-40
MC8271	881-95
MC8271	3854-41
MC8281	858-80
MC82S100C	4473-72
MC82S100M	4473-77
MC82S101C	4473-70
MC82S101M	4473-76
MC8300	881-28
MC8300	3854-33
MC8301	862-120
MC8304	854-168
MC8307	2875-70
MC8308	875-27
MC8309	878-5
MC8310	860-138
MC8311	863-170
MC8312	879-139
MC8314	875-70
MC8316	858-124
MC8318	888-141
MC8322	878-162
MC8324	854-52
MC8328	882-156
MC8328	3856-86
MC8500	2878-3
MC8501	2879-5
MC8502	2879-7
MC8503	2879-12
MC8504	888-108
MC8504	2879-15
MC8505	2892-56
MC8506	2879-9
MC8507	1470-12
MC8507	1469-148
MC8520	2878-16
MC854	2900-8
MC8601	880-104
MC8602	880-165
MC8T26A	★ 3210
	888-56
	★ 3210
	2888-54
	★ 3210
	1452-139
MC8T28	★ 3210
	888-70
	★ 3210
	2889-3
	★ 3210
	1452-140
MC8T95	★ 3209
	857-36
	★ 3209
	1452-143
MC8T96	★ 3209
	858-46
	★ 3209
	1452-144
MC8T97	★ 3209
	857-37
	★ 3209
	1452-145
MC8T98	★ 3209
	858-47
	★ 3209
	1452-146
MC9300	881-29
MC9300	3854-34
MC9301	862-121
MC9304	854-169
MC9307	2875-71
MC9309	878-6
MC9310	860-139

Device	Page-Line
MC9311	863-171
MC9312	879-140
MC9314	875-71
MC9316	858-125
MC9318	888-142
MC9322	878-163
MC9324	854-53
MC9328	882-157
MC9328	3856-87
MC9601	880-105
MC9602	880-166
MCA-series	3403-82
MCA10000	★ 4720
MCA1200ECL	★ 4718
	4451-39
MCA1300ALS	★ 4718
	4451-42
MCA2500ECL	★ 4718
MCA2500ECL	★ 4720
	4451-44
	¶ 443-5
MCA2800ALS	★ 4718
	4451-47
MCA2900ETL	★ 4718
	4451-46
MCA500ALS	★ 4718
	4451-34
MCA6000	★ 4720
MCA600ECL	★ 4718
	4451-35
MCA600ETL	★ 4718
	4451-52
MCA800ECL	★ 4718
	4451-38
MCA Des Sys	5055-25
MCAIII	★ 4720
MCC14457	838-10
MCC14458	838-11
MCCF3334	★ 3614
	3319-123
MCH-01	3808-9
MCM100422	849-11
MCM100422-10	3832-106
MCM100422-15	3833-1
MCM100470-10	3839-55
MCM100470-15	3839-62
MCM100474	849-14
MCM100474-15	3835-42
MCM100480	849-21
MCM100480-25	3844-10
MCM100484	849-19
MCM100484-15	3840-116
MCM10139	★ 4124
	847-41
	★ 4124
	3814-15
MCM10143	★ 4123
	847-46
	¶ 358-1
	★ 4123
	3830-112
MCM10144	★ 4123
	847-61
	★ 4123
	3832-50
MCM10145	★ 4123
	847-53
	★ 4123
	3831-12
MCM10146	★ 4123
	847-74
	★ 4123
	3834-60
MCM10146A	★ 4123
	3834-40
MCM10147	★ 4123
	847-59
	★ 4123
	3832-27
MCM10148	★ 4123
	3832-11
MCM10149	★ 4124
	847-44
	★ 4124
	3814-76
MCM10149-10	★ 4124
	3814-65
MCM10149A	★ 4124
	3814-72

Device	Page-Line
MCM10152	★ 4123
	847-62
	★ 4123
	3832-49
MCM10415	★ 4123
	847-75
MCM10415-10	★ 4123
	3834-37
MCM10415-15	★ 4123
	3834-44
MCM10422	★ 4123
	847-68
MCM10422-10	★ 4123
	3832-107
MCM10422-15	★ 4123
	3833-2
MCM10422-7	★ 4123
	3832-97
MCM10470-10	★ 4123
	3839-59
MCM10470-15	★ 4123
	3839-69
MCM10470-25	★ 4123
	3839-83
MCM10474	★ 4123
	847-81
MCM10474-10	★ 4123
	3835-33
MCM10474-15	★ 4123
	3835-43
MCM10480-25	3844-5
MCM10484	847-91
MCM10484-15	3840-117
MCM10484-25	3841-11
MCM10544	847-63
MCM10544	3832-51
MCM10545	3831-16
MCM10546	847-76
MCM10546	3834-72
MCM10547	847-60
MCM10548	847-57
MCM14505A	831-110
MCM14505A	3832-13
MCM14505C	831-111
MCM14505C	3832-15
MCM14524A	3849-2
MCM14524C	3849-3
MCM14537A	831-119
MCM14537A	3832-89
MCM14537C	831-120
MCM14537C	3832-90
MCM14552A	831-134
MCM14552A	3832-16
MCM14552C	831-135
MCM14552C	3832-17
MCM2016H-45	★ 4118
	3837-62
MCM2016H-55	★ 4118
	3837-83
MCM2016H-70	★ 4118
	3837-98
MCM2018-35	3837-51
MCM2018-45	3837-63
MCM2114-20	★ 4119
	3836-72
MCM2114-25	★ 4119
	3836-83
MCM2114-30	★ 4119
	3836-106
MCM2114-45	★ 4119
	3837-3
MCM2128-10	3838-6
MCM2128-12	3838-40
MCM2128-15	3838-91
MCM2167H-35	★ 4119
	3844-23
MCM2167H-45	★ 4119
	3844-41
MCM2167H-55	★ 4119
	3844-60
MCM2167H-70	★ 4119
	3844-79
MCM21L14-20	★ 4119
	3836-73
MCM21L14-25	★ 4119
	3835-98
	3836-84
MCM21L14-30	★ 4119
	3836-107
MCM21L14-45	★ 4119
	3837-4
MCM27S181	3817-79

Device	Page-Line
MCM27S19	3814-21
MCM27S191	3819-18
MCM27S25A	3815-104
MCM27S27A	3815-98
MCM27S281	3817-80
MCM27S29A	3815-96
MCM27S31A	3815-100
MCM27S35A	3817-68
MCM27S37A	3817-69
MCM27S45A	3818-86
MCM27S47A	3818-87
MCM2801	3811-12
MCM2802	3811-20
MCM2833	¶ 433-1
MCM2833	¶ 433-14
MCM2833	¶ 433-15
MCM2833-15	★ 4118
MCM2833-15	★ 4122
	3812-118
MCM2833-20	★ 4118
MCM2833-20	★ 4122
	3812-119
MCM4027	¶ 440-7
MCM4027A-1	3826-27
MCM4116	¶ 437-16
MCM4116	¶ 440-7
MCM4116	¶ 440-8
MCM4164B-15	★ 4118
	3827-59
MCM4516/17	¶ 441-3
MCM4517-10	★ 4118
	3826-45
MCM4517-12	★ 4118
	3826-49
MCM4517-15	★ 4118
	3826-54
MCM4517-20	★ 4118
	3826-66
MCM6116	★ 4119
MCM6147-55	★ 4119
	3839-122
MCM6147-70	★ 4119
	3840-22
MCM6164-45	3842-126
MCM6164-55	3842-134
MCM6164-70	3843-5
MCM6168-35	★ 4119
	3841-25
MCM6168-45	★ 4119
	3841-65
MCM6168-55	★ 4119
	3842-5
MCM6168-70	★ 4119
	3842-48
MCM6169-35	3841-26
MCM6169-45	3841-66
MCM6169-55	3842-6
MCM6169-70	3842-49
MCM6178-35	3841-30
MCM6178-45	3841-71
MCM6178-55	3842-9
MCM6178-70	3842-51
MCM61L16	★ 4119
MCM61L47-55	★ 4119
	3839-123
MCM61L47-70	★ 4119
	3840-23
MCM6256-10	★ 4118
	3828-94
MCM6256-12	★ 4118
	3829-12
MCM6256-15	★ 4118
	3829-46
MCM6257-10	★ 4118
	3828-95
MCM6257-12	★ 4118
	3829-13
MCM6257-15	★ 4118
	3829-47
MCM6287-35	3846-98
MCM6287-45	3847-15
MCM6287-55	3847-34
MCM6288-35	3844-104
MCM6288-45	3845-2
MCM6288-55	3845-34
MCM63128-15	★ 4120
	3851-114
MCM63128-175	★ 4120
	3851-122
MCM63128-20	★ 4120
	3852-3

Device	Page-Line
MCM63256-15	★ 4120
	3852-84
MCM63256-175	★ 4120
	3852-90
MCM63256-20	★ 4120
	3852-101
MCM65256-30	★ 4121
	3853-15
MCM65256-35	★ 4121
	3853-23
MCM65516	★ 4121
	¶ 374-6
MCM6634	¶ 441-3
MCM6664	¶ 440-7
MCM6664	¶ 440-8
MCM6664/65	¶ 441-3
MCM6664A	¶ 439-2
MCM6665B-15	★ 4118
	3827-60
MCM6665B-20	★ 4118
	3827-81
MCM6670	★ 4121
MCM66700	★ 4121
MCM66710	★ 4121
MCM66714	★ 4121
MCM66720	★ 4121
MCM66730	★ 4121
MCM66734	★ 4121
MCM6674	★ 4121
MCM66740	★ 4121
MCM66750	★ 4121
MCM66751	★ 4121
MCM66760	★ 4121
MCM66770	★ 4121
MCM66780	★ 4121
MCM66790	★ 4121
MCM67256	3824-37
MCM67256-15	3824-4
MCM67256-2	3823-110
MCM67256-20	3824-15
MCM67256-25	3824-38
MCM67259-15	3824-2
MCM67259-20	3824-12
MCM67259-25	3824-33
MCM6810	★ 1662
MCM6810	★ 4119
	3832-40
MCM68364	★ 4120
MCM68365	★ 4120
MCM68366	★ 4120
MCM68367	★ 4120
MCM68368	★ 4120
MCM68369-20	★ 4120
	3850-75
MCM68369-25	★ 4120
	3850-125
MCM68369-30	★ 4120
	3851-41
MCM68369-35	★ 4120
	3851-60
MCM6836E16	★ 1662
MCM6836E16	★ 4122
	3813-90
MCM6836R16	★ 1662
MCM6836R16	★ 4122
	3813-91
MCM68370-20	★ 4120
	3850-76
MCM68370-25	★ 4120
	3850-126
MCM68370-30	★ 4120
	3851-42
MCM68370-35	★ 4120
	3851-61
MCM68764	★ 4122
	3822-62
MCM68764-35	★ 4122
	3822-53
MCM68766	★ 4122
	3822-63
MCM68766-30	★ 4122
	3822-36
MCM68766-30-10	★ 4122
	3822-37
MCM68766-35	★ 4122
	3822-54
MCM68766-35-10	★ 4122
	3822-55
MCM68766-40	★ 4122
	3822-57
MCM68766-40-10	★ 4122
	3822-58

Device	Page-Line
MCM68768-30	★ 4120
	3851-28
MCM68768-35	★ 4120
	3851-56
MCM68769-30	★ 4121
	3822-49
MCM68769-35	★ 4121
	3822-56
MCM68A10	★ 4119
	3832-35
MCM68A316	★ 4120
MCM68A332	★ 4120
MCM68B10	★ 4119
	3832-30
	¶ 370-15
MCM68HC34	★ 1662
MCM68HC34	★ 4122
	831-46
MCM76161	★ 4124
	3819-52
MCM76161A	★ 4124
	3819-19
MCM76165A	★ 4124
	3820-1
MCM7621	★ 4124
	3815-67
MCM7621A	★ 4124
	3815-43
MCM7641	★ 4124
	3816-57
MCM7641A	★ 4124
	3815-45
MCM7643	★ 4124
	3817-37
MCM7643A	★ 4124
	3817-13
MCM7649	★ 4124
	3816-29
MCM7649A	★ 4124
	3816-9
MCM7681	★ 4124
	3817-129
MCM7681A	★ 4124
	3817-104
MCM7685	★ 4124
	3818-47
MCM7685A	★ 4124
	3819-30
MCM93415C	★ 4123
	3834-82
MCM93415M	★ 4123
	3834-92
MCM93422A	★ 4123
	3833-39
MCM93425	★ 4123
	3834-86
MCM93L422	★ 4123
	3833-10
	3833-22
MCM93L422A	★ 4123
	3833-40
MECL	¶ 358-2
MECL	¶ 358-3
MECL	¶ 358-6
MECL	¶ 358-9
MEX6816-22S	2030-69
MEX68KDM	2023-22
MF0D4-02F	¶ 394-13
MF0E102F	¶ 414-1
MHQ3467	3310-56
MHQ4001A	3310-36
MHQ4002A	3310-37
MHQ4013	3310-38
MHQ4014	3310-39
MHW1121	3324-75
MHW1127	3324-76
MHW1171	3324-77
MHW1172	3324-78
MHW1182	3324-79
MHW1221	3324-80
MHW1222	3324-81
MHW1341	3324-82
MHW1342	3324-83
MHW1343	3324-84
MHW1391	3324-85
MHW1392	3324-86
MHW401	3307-106
MHW5181	3324-87
MHW5182	3324-88
MHW559	3324-89
MHW560	3324-90
MHW561	3324-91

¶ Indicates page number in Application Note Directory.
★ Indicates additional data is provided on the page noted.

Motorola Semiconductor Products (Cont'd)

Device	Page-Line
MHW562	3324-92
MHW570	3324-93
MHW572	3324-94
MHW580	3324-95
MHW590	3307-107
MHW591	3307-108
MHW592	3307-109
MHW593	3307-110
MHW594	3324-96
MHW595	3324-97
MHW601	3307-111
MHW602	3307-112
MHW603	3307-113
MHW709	3307-114
MHW710	3307-115
MHW808A	3307-129
MIL-M-38510	★ 696
MMBTS102	3404-139
MMBTS103	3404-140
MMBTS105	3404-141
MMH0026C	2892-112
MOC3031	¶ 424-5
MOC3041	¶ 424-5
MPC100	3385-70
MPC2011	3401-26
MPC2012	3401-27
MPC2014	3401-28
MPC2015	3401-29
MPQ3303	3310-40
MPQ3725	3310-41
MPQ3725A	3310-42
MPQ4003	3310-43
MPQ4004	3310-44
MPQ6842	1454-143
MVMCH1	★ 2117
MVME025	★ 2108 2044-2
MVME050	★ 2108
MVME101	★ 2109
MVME110	★ 2109 2027-20
MVME115M	2027-25
MVME117	★ 2109
MVME120	★ 2109
MVME121	★ 2109
MVME122	★ 2109
MVME123	★ 2109
MVME130	★ 2109
MVME131	★ 2110
MVME201	★ 2110 2045-14
MVME202	★ 2110 2045-15
MVME204	★ 2110
MVME205	★ 2110
MVME210	2045-25
MVME211	★ 2110 2045-11
MVME214	★ 2110
MVME222	★ 2110
MVME300	★ 2110 2043-44
MVME310	★ 2110 2043-49
MVME315	★ 2110 2043-43
MVME316	★ 2111 2045-1
MVME319	★ 2110
MVME320	★ 2110 2044-4
MVME330	★ 2110 2043-40
MVME331	★ 2111 2045-3
MVME332	★ 2111
MVME333	★ 2111
MVME340	★ 2111
MVME350	★ 2111
MVME360	★ 2111
MVME370	★ 2111
MVME372	★ 2111
MVME390	★ 2111
MVME400	★ 2112 2044-42
MVME410	★ 2112 2044-25

Device	Page-Line
MVME420	★ 2112 2044-44
MVME435	★ 2112 2044-41
MVME600	★ 2112 2031-35
MVME601	★ 2112 2031-34
MVME605	★ 2112
MVME610	★ 2112 2044-9
MVME615	★ 2112 2044-10
MVME616	★ 2112 2044-11
MVME620	★ 2112 2044-23
MVME625	★ 2112 2044-24
MVME701	★ 2112
MVME705	★ 2112
MVME706	★ 2112
MVME707	★ 2112
MVME708	★ 2112
MVME820	★ 2112
MVME821	★ 2112
MVME822	★ 2112
MVME910	★ 2112
MVME920	★ 2113
MVME921	★ 2113
MVME922	★ 2113
MVME930	★ 2113
MVME931	★ 2113
MVME932	★ 2113
MVME933	★ 2113
MVME935	★ 2113
MVME940	★ 2113
MVME941	★ 2113
MVME942	★ 2113
MVME943	★ 2113
MVME944	★ 2113
MicroMAP	★ 1658
NE565	3376-17
NE592	3307-155
OP-27A	★ 3616 3341-37
OP-27B	★ 3616 3338-10
OP-27C	★ 3616 3339-25
OP-27E	★ 3616 3341-38
OP-27F	★ 3616 3338-11
OP-27G	★ 3616 3339-21
OP-37A	★ 3616 3341-39
OP-37B	★ 3616 3338-24
OP-37C	★ 3616 3339-48
OP-37E	★ 3616 3341-40
OP-37F	★ 3616 3338-25
OP-37G	★ 3616 3339-14
PC68000	★ 1904
RMS68	★ 2108
SAA1042	2896-24
SAA1042A	2896-23
SC42468	2892-2
SC42584	2892-4
SC42585	2892-5
SE592	3307-156
SG1525A	★ 3626 3396-22
SG1526	★ 3626 3396-23
SG1527A	★ 3626 3396-24
SG2525A	★ 3626 3396-25
SG2526	★ 3626 3396-26
SG2527A	★ 3626 3396-27
SG3525A	★ 3626 3396-28
SG3526	★ 3626 3396-29

Device	Page-Line
SG3527A	★ 3626 3396-30
SN54ALS539	863-5
SN54ALS561	859-91
SN54LS00	★ 1122 871-28
SN54LS01	★ 1122 871-173
SN54LS02	★ 1122 874-24
SN54LS03	★ 1122 871-174
SN54LS04	★ 1124 857-117
SN54LS05	★ 1124 857-164
SN54LS08	★ 1122 869-112
SN54LS09	★ 1122 869-150
SN54LS10	★ 1122 870-144
SN54LS107A	★ 1126 868-2
SN54LS109A	★ 1126 867-128
SN54LS11	★ 1122 869-28
SN54LS112A	★ 1126 868-95
SN54LS113A	★ 1126 868-57
SN54LS114A	★ 1126 868-123
SN54LS12	★ 1122 870-176
SN54LS122	★ 1131 880-119
SN54LS123	★ 1131 880-153
SN54LS125A	★ 1124 856-105
SN54LS126A	★ 1124 856-130
SN54LS13	★ 1125 887-115
SN54LS132	★ 1125 888-2
SN54LS133	★ 1122 872-60
SN54LS136	★ 1123 874-74
SN54LS137	★ 1130 863-154
SN54LS138	★ 1130 863-118
SN54LS139	★ 1130 863-18
SN54LS14	★ 1125 888-40
SN54LS145	★ 1130 862-108
SN54LS147	★ 1131 889-49
SN54LS148	★ 1131 888-159
SN54LS15	★ 1122 869-56
SN54LS151	★ 1129 879-176
SN54LS152	880-22
SN54LS153	★ 1129 877-142
SN54LS155	★ 1130 863-82
SN54LS156	★ 1130 863-51
SN54LS157	★ 1129 879-11
SN54LS158	★ 1129 878-96
SN54LS160A	★ 1127 860-164
SN54LS161A	★ 1127 858-155
SN54LS162A	★ 1127 861-14
SN54LS163A	★ 1127 859-10

Device	Page-Line
SN54LS164	★ 1128 882-8
	★ 1128 3856-46
SN54LS165	★ 1128 882-58
	★ 1128 3856-3
SN54LS166	★ 1128 882-72
SN54LS168	★ 1127 861-95
SN54LS169	★ 1127 859-141
SN54LS170	★ 1128 877-7
SN54LS173A	★ 1126 866-15
SN54LS174	★ 1126 866-53
SN54LS175	★ 1126 864-285
SN54LS181	★ 1132 855-59
SN54LS182	★ 1132 855-107
SN54LS183	★ 1132 855-4
SN54LS190	★ 1127 861-171
SN54LS191	★ 1127 859-179
SN54LS192	★ 1127 861-139
SN54LS193	★ 1127 860-39
SN54LS194A	★ 1128 881-137
	★ 1128 3854-88
SN54LS195A	★ 1128 881-47
	★ 1128 3854-89
SN54LS196	★ 1127 860-122
SN54LS197	★ 1127 858-100
SN54LS20	★ 1122 870-16
SN54LS21	★ 1122 868-163
SN54LS22	★ 1122 870-92
SN54LS221	★ 1131 880-133
SN54LS240	★ 1124 883-158
	★ 1124 2882-54
SN54LS241	★ 1124 884-42
	★ 1124 2882-15
SN54LS242	★ 1124 883-76
	★ 1124 2888-23
SN54LS243	★ 1124 883-77
	★ 1124 2888-24
SN54LS244	★ 1124 884-91
	★ 1124 2882-16
SN54LS245	★ 1124 885-109
	★ 1124 2890-45
SN54LS247	★ 1130 2875-111
SN54LS248	★ 1130 2875-72
SN54LS249	★ 1130 2875-46
SN54LS251	★ 1129 880-53
SN54LS253	★ 1129 878-48
SN54LS256	★ 1126 875-20

Device	Page-Line
SN54LS257A	★ 1129 879-50
SN54LS258A	★ 1129 878-136
SN54LS259	★ 1126 875-142
SN54LS26	★ 1122 871-123
SN54LS260	★ 1122 865-20
SN54LS266	★ 1123 874-169
SN54LS27	★ 1122 865-56
SN54LS273	★ 1126 866-155
SN54LS279	★ 1126 875-82
SN54LS28	★ 1122 874-25
SN54LS280	★ 1132 889-25
SN54LS283	★ 1132 856-44
SN54LS290	★ 1127 860-78
SN54LS293	★ 1127 859-68
SN54LS295A	★ 1129 881-16
	★ 1129 3854-90
SN54LS298	★ 1129 879-105
SN54LS299	★ 1129 882-144
SN54LS30	★ 1122 872-29
SN54LS32	★ 1122 873-55
SN54LS322A	★ 1129 856-77
SN54LS323	★ 1129 882-145
SN54LS33	★ 1122 865-79
SN54LS348	888-168
SN54LS352	★ 1129 878-23
SN54LS353	★ 1129 877-106
SN54LS365A	★ 1124 857-14
SN54LS366A	858-24
SN54LS367A	★ 1124 857-15
SN54LS368A	★ 1124 858-25
SN54LS37	★ 1122 871-67
SN54LS373	★ 1126 876-16
SN54LS374	★ 1126 867-15
SN54LS375	★ 1126 875-46
SN54LS377	★ 1126 867-44
SN54LS378	★ 1126 866-86
SN54LS379	★ 1126 864-333
SN54LS38	★ 1122 871-107
SN54LS385	★ 1132 854-12
SN54LS386	★ 1123 874-121
SN54LS390	★ 1127 861-39
SN54LS393	★ 1127 859-32
SN54LS395	★ 1129 3854-91
SN54LS398	★ 1129 879-106
SN54LS399	★ 1129 879-107
SN54LS40	★ 1122 870-60
SN54LS42	★ 1130 862-136

Device	Page-Line
SN54LS47	★ 1130 2875-112
SN54LS48	★ 1130
SN54LS48	★ 1131 2875-73
SN54LS49	★ 1130 2875-47
SN54LS490	★ 1127 861-40
SN54LS51	★ 1123 872-94
SN54LS54	★ 1123 872-172
SN54LS540	★ 1125 883-159
	★ 1125 2882-55
SN54LS541	★ 1125 884-43
	★ 1125 2882-17
SN54LS55	★ 1123 872-138
SN54LS568	★ 1127 861-113
SN54LS569	★ 1127 860-12
SN54LS604	★ 1129 875-111
SN54LS605	★ 1129 875-112
SN54LS606	★ 1129 875-113
SN54LS607	★ 1129 875-114
SN54LS620	★ 1125
SN54LS621	★ 1125 886-56
SN54LS622	★ 1125 886-57
SN54LS623	★ 1125 886-101
SN54LS640	★ 1125 885-14
	★ 1125 2890-46
SN54LS641	★ 1125 885-49
	★ 1125 2890-42
SN54LS642	★ 1125 884-144
	★ 1125 2890-43
SN54LS643	★ 1125 885-15
SN54LS644	★ 1125 885-142
SN54LS645	★ 1125 885-110
	★ 1125 2890-47
SN54LS668	★ 1127 861-96
SN54LS669	★ 1127 860-54
SN54LS670	★ 1128 877-21
	★ 1128 3830-97
SN54LS673	★ 1129 883-24
SN54LS674	★ 1129 883-11
SN54LS682	★ 1131 854-136
SN54LS683	★ 1131 854-117
SN54LS684	★ 1131 854-137
SN54LS685	★ 1132 854-118
SN54LS686	★ 1132 854-138
SN54LS687	★ 1132 854-119
SN54LS688	★ 1131 854-139
SN54LS689	★ 1132 854-120
SN54LS716	★ 1128 862-42

Arranged alphanumerically from left to right.

Motorola Semiconductor Products (Cont'd)

Device	Page-Line
SN54LS718	★ 1128 862-36
SN54LS724	★ 1131
SN54LS73A	★ 1126 868-3
SN54LS748	★ 1131 888-160
SN54LS74A	★ 1126 864-240
SN54LS75	★ 1126 875-47
SN54LS76A	★ 1126 868-34
SN54LS77	★ 1126 875-64
SN54LS78A	★ 1126 867-144
SN54LS795	★ 1124 857-56
SN54LS796	★ 1125 857-57
SN54LS797	★ 1125 857-58
SN54LS798	★ 1125 857-59
SN54LS83A	★ 1132 856-45
SN54LS848	★ 1131 888-175
SN54LS85	★ 1131 854-54
SN54LS86	★ 1123 874-122
SN54LS90	★ 1127 860-79
SN54LS91	★ 1128 882-106
SN54LS92	★ 1127 862-19
SN54LS93	★ 1127 859-69
SN54LS95B	★ 1128 881-78 ★ 1128 3854-92
SN54S148	888-167
SN54S348	888-174
SN54SL170	877-8
SN74ALS153	877-127
SN74ALS649	885-156
SN74ALS651	885-60
SN74ALS790	2878-38
SN74LS00	★ 1122
SN74LS01	★ 1122 871-175
SN74LS02	★ 1122 874-26
SN74LS03	★ 1122 871-176
SN74LS04	★ 1124 857-118
SN74LS05	★ 1124 857-165
SN74LS08	★ 1122 869-113
SN74LS09	★ 1122 869-151
SN74LS10	★ 1122 870-145
SN74LS107A	★ 1126 868-4
SN74LS109A	★ 1126 867-129
SN74LS11	★ 1122 869-29
SN74LS112A	★ 1126 868-96
SN74LS113A	★ 1126 868-58
SN74LS114A	★ 1126 868-124
SN74LS12	★ 1122 870-177
SN74LS122	★ 1131 880-120
SN74LS123	★ 1131 880-154
SN74LS125A	★ 1124 856-106
SN74LS126A	★ 1124 856-131
SN74LS13	★ 1125 887-116
SN74LS132	★ 1125 888-3
SN74LS133	★ 1122 872-61
SN74LS136	★ 1123 874-75
SN74LS137	★ 1130 863-155
SN74LS138	★ 1130 863-119
SN74LS139	★ 1130 863-19
SN74LS14	★ 1125 888-41
SN74LS145	★ 1130 862-109
SN74LS147	★ 1131 889-50
SN74LS148	★ 1131 888-161
SN74LS15	★ 1122 869-57
SN74LS151	★ 1129 879-177
SN74LS153	★ 1129 877-143
SN74LS154	¶ 380-3
SN74LS155	★ 1130 863-83
SN74LS156	★ 1130 863-52
SN74LS157	★ 1129 879-12
SN74LS158	★ 1129 878-97
SN74LS160A	★ 1127 860-165
SN74LS161A	★ 1127 858-156
SN74LS162A	★ 1127 861-15
SN74LS163	¶ 380-3
SN74LS163A	★ 1127 859-11
SN74LS164	★ 1128 882-9 ★ 1128 3856-47
SN74LS165	★ 1128 882-59 ¶ 380-3 ★ 1128 3856-4
SN74LS166	★ 1128 882-73 ★ 1128 3856-5
SN74LS168	★ 1127 861-97
SN74LS169	★ 1127 859-142
SN74LS170	★ 1128 877-9 ★ 1128 3830-83
SN74LS173A	★ 1126 866-16
SN74LS174	★ 1126 866-54
SN74LS175	★ 1126 864-286 ¶ 380-3
SN74LS181	★ 1132 855-60
SN74LS182	★ 1132 855-108
SN74LS183	★ 1132 855-5
SN74LS190	★ 1127 861-172
SN74LS191	★ 1127 859-180
SN74LS192	★ 1127 861-140
SN74LS193	★ 1127 860-40
SN74LS194A	★ 1128 881-138 ★ 1128 3854-93
SN74LS195A	★ 1128 881-48 ★ 1128 3854-94
SN74LS196	★ 1127 860-123
SN74LS197	★ 1127 858-101
SN74LS20	★ 1122 870-17
SN74LS21	★ 1122 868-164
SN74LS22	★ 1122 870-93
SN74LS221	★ 1131 880-134
SN74LS240	★ 1124 883-160 ★ 1124 2882-56
SN74LS241	★ 1124 884-44 ★ 1124 2882-18
SN74LS242	★ 1124 883-78 ★ 1124 2888-41
SN74LS243	★ 1124 883-79 ★ 1124 2888-42
SN74LS244	★ 1124 884-92 ★ 1124 2882-19
SN74LS245	★ 1124 885-111 ★ 1124 2890-63
SN74LS247	★ 1130 2875-113
SN74LS248	★ 1130 2875-74
SN74LS249	★ 1130 2875-48
SN74LS251	★ 1129 880-54
SN74LS253	★ 1129 878-49
SN74LS256	★ 1126 875-21
SN74LS257A	★ 1129 879-51
SN74LS258A	★ 1129 878-137
SN74LS259	★ 1126 875-143
SN74LS26	★ 1122 871-124
SN74LS260	★ 1122 865-21
SN74LS266	★ 1123 874-170
SN74LS27	★ 1122 865-57
SN74LS273	★ 1126 866-156
SN74LS279	★ 1126 875-83
SN74LS28	★ 1122 874-27
SN74LS280	★ 1132 889-26
SN74LS283	★ 1132 856-46
SN74LS290	★ 1127 860-80
SN74LS293	★ 1127 859-70
SN74LS295A	★ 1129 881-17 ★ 1129 3854-95
SN74LS298	★ 1129 879-108
SN74LS299	★ 1129 882-146
SN74LS30	★ 1122 872-30
SN74LS32	★ 1122 873-56
SN74LS322A	★ 1129 856-78
SN74LS323	★ 1129 882-147
SN74LS33	★ 1122 865-80
SN74LS348	★ 1131 888-169
SN74LS352	★ 1129 878-24
SN74LS353	★ 1129 877-107
SN74LS365A	★ 1124 857-16
SN74LS366A	★ 1124 858-26
SN74LS367A	★ 1124 857-17
SN74LS368A	★ 1124 858-27
SN74LS37	★ 1122 871-68
SN74LS373	★ 1126 876-17
SN74LS374	★ 1126 867-16 ¶ 380-3
SN74LS375	★ 1126 875-48
SN74LS377	★ 1126 867-45 ¶ 380-3
SN74LS378	★ 1126 866-87
SN74LS379	★ 1126 864-334
SN74LS38	★ 1122 871-108
SN74LS385	★ 1132 854-13
SN74LS386	★ 1123 874-123
SN74LS390	★ 1127 861-41
SN74LS393	★ 1127 859-33
SN74LS395	★ 1129 3854-96
SN74LS398	★ 1129 879-109
SN74LS399	★ 1129 879-110
SN74LS40	★ 1122 870-61
SN74LS40B	¶ 394-13
SN74LS42	★ 1130 862-137
SN74LS47	★ 1130 2875-114
SN74LS48	★ 1130 2875-75
SN74LS49	★ 1130 2875-49
SN74LS490	★ 1127 861-42
SN74LS51	★ 1123 872-95
SN74LS54	★ 1123 872-173
SN74LS540	★ 1125 883-161 ★ 1125 2882-57
SN74LS541	★ 1125 884-45 ★ 1125 2882-20
SN74LS55	★ 1123 872-139
SN74LS568	★ 1127 861-114
SN74LS569	★ 1127 860-13
SN74LS604	★ 1129 875-115
SN74LS605	★ 1129 875-116
SN74LS606	★ 1129 875-117
SN74LS607	★ 1129 875-118
SN74LS620	★ 1125 886-102
SN74LS621	★ 1125 886-58
SN74LS622	★ 1125 886-59
SN74LS623	★ 1125 886-103
SN74LS640	★ 1125 885-16 ★ 1125 2890-64
SN74LS641	★ 1125 885-50 ★ 1125 2890-50
SN74LS642	★ 1125 884-145 ★ 1125 2890-51
SN74LS643	★ 1125 885-17
SN74LS644	★ 1125 885-143
SN74LS645	★ 1125 885-112 ★ 1125 2890-65
SN74LS668	★ 1127 861-98
SN74LS669	★ 1127 860-55
SN74LS670	★ 1128 877-22 ★ 1128 3830-98
SN74LS673	★ 1129 883-25
SN74LS674	★ 1129 883-12
SN74LS682	★ 1131 854-140
SN74LS683	★ 1131 854-121
SN74LS684	★ 1131 854-141
SN74LS685	★ 1132 854-122
SN74LS686	★ 1132 854-142
SN74LS687	★ 1132 854-123
SN74LS688	★ 1131 854-143
SN74LS689	★ 1132 854-124
SN74LS716	★ 1128 862-43
SN74LS718	★ 1128 862-37
SN74LS724	★ 1131 887-78
SN74LS73A	★ 1126 868-5
SN74LS748	★ 1131 888-162
SN74LS74A	★ 1126 864-241
SN74LS75	★ 1126 875-49
SN74LS76A	★ 1126 868-35
SN74LS77	★ 1126 875-65
SN74LS783	★ 1129 877-93 ★ 1129 1470-48
SN74LS78A	★ 1126 867-145
SN74LS795	★ 1124 857-60
SN74LS796	★ 1125 857-61
SN74LS797	★ 1125 857-62
SN74LS798	★ 1125 857-63
SN74LS83A	★ 1132 856-47
SN74LS848	★ 1131 888-176
SN74LS85	★ 1131 854-55
SN74LS86	★ 1123 874-124
SN74LS90	★ 1127 860-81
SN74LS91	★ 1128 882-107
SN74LS92	★ 1127 862-20
SN74LS93	★ 1127 859-71
SN74LS95B	★ 1128 881-79 ★ 1128 3854-97
SN75172	★ 3211
SN75172	★ 3212 2884-25
SN75173	★ 3211
SN75173	★ 3212 2887-39
SN75174	★ 3211
SN75174	★ 3212 2884-26
SN75175	★ 3211
SN75175	★ 3212 2887-40
SN75176	2891-22
SN75177	2891-23
SN75178	2891-24
SYS1121UY221	★ 2113
SYS1121VY221	★ 2113
SYS1131UY221	★ 2113
SYS1131VY221	★ 2113
Standard Cell	★ 4719
Supercell	4491-4
TBA120	★ 3613 3326-37
TCA4500A	★ 3614 3322-111
TCA5550	★ 3613
TCA5550	★ 3614 3316-119 3319-97
TCA5600	3399-59
TCA5600	1469-159
TCF5600	3399-60
TCF5600	1469-160
TCF6000	1469-121
TDA1085A	2895-130
TDA1185	3405-15
TDA1190	★ 3612
TDA1190	★ 3613 3326-38
TDA11902	3326-39
TDA1190P	★ 3612
TDA1190P	★ 3613 3326-40
TDA1285	2895-68
TDA1285A	2895-126
TDA2002	3316-195
TDA2002A	3316-196
TDA3190P	★ 3612
TDA3190P	★ 3613 3326-41
TDA3301	★ 3612 3324-129
TDA3303	★ 3612 3324-130
TDA3330	★ 3612 3324-131
TDA3333	★ 3612 3324-132
TDA3335	3324-133
TDA4600	3399-98
TL071	★ 3616 3357-21
TL071AC	★ 3616 3354-48
TL071BC	★ 3616 3346-181
TL071M	★ 3616 3354-47
TL072AC	★ 3617 3366-35
TL072BC	★ 3617 3363-45

¶ Indicates page number in Application Note Directory.
★ Indicates additional data is provided on the page noted.

Motorola Semiconductor Products

Device	Page-Line
TL072C	★ 3617
	3368-17
TL072M	★ 3617
	3366-34
TL074AC	★ 3618
	3372-15
TL074BC	★ 3618
	3372-13
TL074C	★ 3618
	3373-27
TL074M	★ 3618
	3373-10
TL081	★ 3616
	3357-127
TL081A	★ 3616
	3354-49
TL081B	★ 3616
	3346-192
TL081C	★ 3616
	3357-131
TL081M	★ 3616
	3354-54
TL082A	★ 3617
	3366-42
TL082B	★ 3617
	3363-47
TL082C	★ 3617
	3368-51
TL082M	★ 3617
	3366-46
TL084	★ 3618
	3373-54
TL084A	★ 3618
	3372-20
TL084C	★ 3618
	3374-4
TL084M	★ 3618
	3373-12
TL431C	★ 3628
	3393-65
TL431M	★ 3628
	3393-66
TL494C	★ 3626
	3396-31
TL494M	★ 3626
	3396-32
TL495C	★ 3626
	3396-33
TL495M	★ 3626
	3396-34
TL780-12C	★ 3622
TL780-12C	★ 3623
TL780-12C	★ 3624
	3387-47
TL780-15C	★ 3622
TL780-15C	★ 3623
TL780-15C	★ 3624
	3384-109
TL780-5C	★ 3622
TL780-5C	★ 3623
TL780-5C	★ 3624
	3384-110
UAA1016A	3405-131
UAA1016B	3405-132
ULN2001	★ 3212
ULN2002	★ 3212
ULN2003	★ 3212
ULN2004	★ 3212
ULN2068	★ 3212
	3309-166
ULN2074	★ 3212
	3309-167
ULN2801	★ 3212
	2895-9
ULN2802	★ 3212
	2895-17
ULN2803	★ 3212
	2894-151
ULN2804	★ 3212
	2894-137
VERSAdos	★ 2108
VERSAmodule	★ 2114
	2027-11
VME/10	1819-4
VME10	★ 1905
VMEbus	★ 2109
VMEmodule	★ 1659
VMEmodules	★ 2108
WACC	4460-46
WACC	4460-51
WACC	4460-55
WACC	4460-59
WACC	4460-63
WACC	4460-66
WACC	4460-68
WACC	4460-70
WACC	4460-73
WACC	4460-77
WACC	4461-11
XC14457	3323-39
XC14458	3323-40
XDOS	¶ 375-7
μA78S40	★ 3626
	3396-35
	¶ 427-18
μA9636	★ 3212
	2881-14

NCR Corp., Microelectronics Div.

Device	Page-Line
3u CMOS	4485-13
52002	¶ 439-20
52004	¶ 439-20
52211	¶ 439-21
52212	¶ 439-21
52832/64	¶ 434-13
52864	¶ 434-1
74HCT784	843-49
74HCT784X4	843-50
ADP-31A	2031-22
ADP-32	2035-61
ADP-40	2038-43
ADP-41	2038-44
ADP-44	2038-46
ADP-52	2038-45
ADP-54	2038-47
CMOS-II Library	★ 4722
CMOS-II Library	★ 4727
	4481-1
CMOS-III Library	★ 4722
CMOS-III Library	★ 4727
	4481-2
HCA6206	★ 4729
	4452-18
HCA6212	★ 4729
	4452-20
HCA6225	★ 4729
	4452-23
HCA6238	★ 4729
	4452-24
HCA6248	★ 4729
	4452-25
HCA6306	★ 4729
	4452-19
HCA6312	★ 4729
	4452-21
HCA6324	★ 4729
	4452-22
HCA6348	★ 4729
	4452-26
NCR/32-010	1464-108
NCR/32-020	1464-109
NCR/32-020	1405-1
NCR/32-500	1464-110
NCR/32-580	1464-112
NCR/32-590	1464-111
NCR23128-15	★ 4127
	3851-115
NCR23128-20	★ 4127
	3852-4
NCR23128-25	★ 4127
	3852-26
NCR23128-30	★ 4127
	3852-45
NCR23128-45	★ 4127
	3852-59
NCR23128S-15	★ 4127
	3851-116
NCR23128S-20	★ 4127
	3852-5
NCR23128S-25	★ 4127
	3852-27
NCR23128S-30	★ 4127
	3852-46
NCR23128S-45	★ 4127
	3852-60
NCR2316-20	★ 4127
	3849-39
NCR2316-25	★ 4127
	3849-42
NCR2316-30	★ 4127
	3849-46
NCR2316-45	★ 4127
	3849-60
NCR23256-15	★ 4127
	3852-85
NCR23256-20	★ 4127
	3852-102
NCR23256-25	★ 4127
	3853-1
NCR23256-30	★ 4127
	3853-16
NCR23256-45	★ 4127
	3853-27
NCR23256S-15	★ 4127
	3852-86
NCR23256S-20	★ 4127
	3852-103
NCR23256S-25	★ 4127
	3853-2
NCR23256S-30	★ 4127
	3853-17
NCR23256S-45	★ 4127
	3853-28
NCR23257-15	★ 4127
	3852-87
NCR23257-20	★ 4127
	3852-104
NCR23257-25	★ 4127
	3853-3
NCR23257-30	★ 4127
	3853-18
NCR23257S-15	★ 4127
	3852-88
NCR23257S-20	★ 4127
	3852-105
NCR23257S-25	★ 4127
	3853-4
NCR23257S-30	★ 4127
	3853-19
NCR23257S-45	★ 4127
	3853-29
NCR2332-20	★ 4127
	3849-68
NCR2332-25	★ 4127
	3849-91
NCR2332-30	★ 4127
	3849-107
NCR2332-45	★ 4127
	3850-11
NCR2333-20	★ 4127
	3849-82
NCR2333-25	★ 4127
	3849-92
NCR2333-30	★ 4127
	3849-108
NCR2333-45	★ 4127
	3850-12
NCR2364-20	★ 4127
	3850-64
NCR2364-25	★ 4127
	3850-110
NCR2364-30	★ 4127
	3851-29
NCR2364-45	★ 4127
	3851-75
NCR2364S-20	★ 4127
	3850-65
	3850-127
NCR2364S-25	★ 4127
	3850-111
NCR2364S-30	★ 4127
	3851-30
NCR2364S-45	★ 4127
	3851-76
NCR2365-20	★ 4127
	3850-77
NCR2365-25	★ 4127
	3850-128
NCR2365-30	★ 4127
	3851-43
NCR2365-45	★ 4127
	3851-82
NCR2365S-20	★ 4127
	3850-78
NCR2365S-25	★ 4127
	3850-129
NCR2365S-30	★ 4127
	3851-44
NCR2365S-45	★ 4127
	3851-83
NCR23C1000	★ 4127
	3853-86
NCR23C128-15	★ 4127
	3851-102
NCR23C128-20	★ 4127
	3851-124
NCR23C128-25	★ 4127
	3852-18
NCR23C256-15	★ 4127
	3852-79
NCR23C256-20	★ 4127
	3852-92
NCR23C256-25	★ 4127
	3852-119
NCR23C512-15	★ 4127
	3853-42
NCR23C512-20	★ 4127
	3853-46
NCR23C512-25	★ 4127
	3853-51
NCR23C64-15	★ 4127
	3850-40
NCR23C64-20	★ 4127
	3850-55
NCR23C64-25	★ 4127
	3850-92
NCR23C65-15	★ 4127
	3850-42
NCR23C65-20	★ 4127
	3850-57
NCR23C65-25	★ 4127
	3850-97
NCR45CF8	844-114
NCR45CG72	★ 1134
	844-67
NCR45CM16	843-113
	¶ 366-3
NCR45CT6	806-120
	¶ 430-3
NCR45GDS1	★ 1134
NCR45GS2	★ 1134
	806-121
NCR52001	★ 4128
NCR52001	★ 4130
	3811-49
	¶ 440-4
NCR52002	★ 4128
NCR52002	★ 4130
	3811-69
	¶ 440-4
NCR52004	★ 4128
NCR52004	★ 4130
	3811-83
	¶ 440-4
NCR52004-28	★ 4128
NCR52004-28	★ 4130
	3811-85
NCR52210	★ 4128
NCR52210	★ 4130
	3811-22
	¶ 440-4
NCR52211	★ 4128
NCR52211	★ 4130
	3811-45
	¶ 440-4
NCR52212	★ 4128
NCR52212	★ 4130
	3811-57
	¶ 440-4
NCR52801	★ 4128
	3811-8
NCR52832	★ 4129
	3812-121
	¶ 434-4
	¶ 434-5
	¶ 434-17
NCR52864	★ 1429
NCR52864	★ 4129
	3811-31
	¶ 434-4
	¶ 434-5
	¶ 434-17
NCR52864HR	★ 1429
NCR52864HR	★ 4129
	3813-74
NCR53001	¶ 434-14
NCR53002	¶ 434-14
NCR53004	¶ 434-14
NCR5380	★ 3214
	1468-39
NCR5381	1468-41
NCR5385	1468-40
NCR5386	★ 3214
NCR59306	★ 4128
	3811-14
NCR59306A	★ 4128
	3811-15
NCR59308	★ 4128
	3811-38
	¶ 435-2
NCR6500/1	★ 1671
	1453-27
	★ 1671
	1427-5
NCR6500/11	★ 1671
	1453-94
	★ 1671
	1427-6
NCR65C00/1	★ 1671
	1453-48
	★ 1671
	1427-7
NCR65C00/2	★ 1671
	1453-49
NCR65C00/3	★ 1671
	1453-50
NCR65C02	★ 1671
	1453-51
	★ 1671
	1427-8
NCR65C21	★ 1671
	1453-120
NCR65C22	★ 1671
	1453-121
NCR65CX02	★ 1671
NCR65CX02	★ 4722
NCR65CX02	★ 4727
	1453-52
NCR7300	★ 1672
	1465-58
NCR7301	★ 1672
	1465-59
NCR74HCT384	843-43
NCR8301	1469-99
NCR8310	★ 3214
	1469-104
NCR8415	1469-161
NCR8489	3319-83
NCR 52001	¶ 439-20
NCR 52210	¶ 439-21
NCR 52801	¶ 434-2
NCR 52832	¶ 434-1
NCR 59308	¶ 434-3
NCRCX02	1453-53
Supercell	★ 4722
Supercell	★ 4727
Supercells	4491-27

NEC Electronics

Device	Page-Line
71051	1459-23
71051	1457-203
71051	1457-344
IE-70108-5	1819-8
IE-70116-5	1819-9
MC1938	3378-20
MC4137	3378-21
MC4138	3378-22
MC4264	3379-61
MC4290	1469-34
MC4760	3323-116
MC5108B	3308-33
MC5120	3308-34
MC5121	3308-35
MC5156	3308-36
MC5157	3308-37
MC5192	3308-38
MC5229	3308-39
MC5384	3308-40
MC5385	3308-41
MC5386	3308-42
MC5800	3308-43
MC5801	3308-44
MC5802	3308-45
MC5805	3308-46
MC5814	3308-47
MC5815	3308-48
MD-086FD-10	1819-10
μCOM-4	1409-16
μCOM-75	1450-106
μPB100422-10	3832-102
μPB100422-70	3832-94
μPB100470-10	3839-56
μPB100470-15	3839-65
μPB100470-90	3839-53
μPB100474-10	3835-31
μPB100474-15	3835-38
μPB100474-4	3835-24
μPB100474-60	3835-25
μPB100474-80	3835-26
μPB10142	3832-10
μPB10422-10	3832-109
μPB10422-70	3832-98
μPB10470-10	3839-60
μPB10470-15	3839-71
μPB10470-90	3839-54
μPB10474-10	3835-34
μPB10474-15	3835-45
μPB10474-80	3835-27
μPB2089	3831-97
μPB2289	3831-49
μPB426	3817-38
μPB426-1	3817-30
μPB426-2	3817-15
μPB426-3	3816-96
μPB429-1	3819-37
μPB429-2	3819-22
μPB429-3	3818-118
μPB450	4473-82
μPB553A	3375-101
μPB556	3375-81
μPB562	3375-82
μPB566	3376-5
μPB571	3376-4
μPB572	3376-8
μPB581C	3375-99
μPB582C	3375-100
μPB6101	4452-27
μPB6102	4452-29
μPB6103	4452-31
μPB6111	4452-33
μPB6120	4452-38
μPB6311	4452-34
μPB6321	4452-37
μPB6330	4453-4
μPB6340	4453-7
μPB6350	4453-10
μPB65004	4452-32
μPB65011	4452-36
μPB65021	4453-3
μPB65022	4453-2
μPB65030	4453-5
μPB65031	4453-6
μPB65042	4453-9
μPB65070	4453-12
μPB65080	4453-14
μPB65081	4453-13
μPB65101	4453-15
μPB65150	4453-17
μPB65200	4453-18
μPB8212	1457-180
μPB8216	1456-110
μPB8216	1457-113
μPB8216	1457-301
μPB8226	1456-111
μPB8226	1457-114
μPB8226	1457-302
μPB8282	1462-37
μPB8283	1462-29
μPB8284A	1461-101
μPB8286	1462-21
μPB8287	1462-10
μPB8288	1461-89
μPB8289	1461-79
μPB9201	1467-74
μPC1023	3319-10
μPC1024	3319-11
μPC1026	3322-116
μPC1028	3322-10
μPC1031	3326-129
μPC1032	3319-12
μPC1042	3396-41
μPC1060	3402-70
μPC1158H2	3319-13
μPC1176C	3322-84
μPC1185HC	3318-153
μPC1188H	3318-101
μPC1197	3322-117
μPC1212	3318-41
μPC1213	3318-42
μPC1215V	3321-29
μPC1216	3321-30
μPC1222	3321-65
μPC1225	3316-186

Arranged alphanumerically from left to right.

ADVERTISERS' PRODUCT INDEX

NEC Electronics (Cont'd)

Device	Page-Line
μPC1227	3322-118
μPC1230H2	3318-102
μPC1238H/V	3316-204
μPC1241H	3316-205
μPC1242H	3316-206
μPC1243	3321-55
μPC1245	3322-11
μPC1248	3321-31
μPC1252H2	3319-101
μPC1253H2	3316-139
μPC1277	3318-186
μPC1350	3316-62
μPC1352	3324-144
μPC1356	3327-31
μPC1361	3324-108
μPC1362	3324-109
μPC1363	3324-110
μPC1372	3324-145
μPC1377	3324-146
μPC1378	3326-130
μPC1382	3326-43
μPC1391	3326-85
μPC1394	3326-96
μPC1397	3326-108
μPC1401	3324-147
μPC1406	3326-44
μPC1411	3326-31
μPC1458	3330-6
μPC1458	3367-14
μPC1473	3307-76
μPC1473	3322-162
μPC1474	3307-77
μPC1474	3322-163
μPC1475	3307-78
μPC1475	3322-164
μPC1476	3324-57
μPC1477	3325-96
μPC1478	3326-13
μPC1480CA	3326-92
μPC1481	3325-161
μPC1507	3327-32
μPC1507	3327-126
μPC1555	3383-42
μPC1651	3307-158
μPC1652	3307-159
μPC1655	3307-160
μPC1656	3308-1
μPC1658	3308-2
μPC1659	3308-3
μPC2002	3316-207
μPC2005	3318-199
μPC2605H	3319-144
μPC2610H	3319-145
μPC301A	3356-24
μPC305	3393-4
μPC311	3313-17
μPC317	3392-111
μPC318	3357-72
μPC319	3315-7
μPC324	3334-154
μPC339	3316-24
μPC3403	3335-7
μPC3423	3401-47
μPC356	3352-22
μPC357	3352-23
μPC358	3367-54
μPC393	3314-45
μPC398	3404-60
μPC4061	3357-11
μPC4062	3368-12
μPC4064	3373-24
μPC4071	3357-14
μPC4072	3368-15
μPC4074	3373-26
μPC4081	3357-129
μPC4082	3368-42
μPC4084	3373-51
μPC4250	3334-47
μPC4250C	3355-15
μPC4539	3357-185
μPC4556	3367-3
μPC4557	3366-59
μPC4558	3367-32
μPC4559	3367-2
μPC4560	3367-38
μPC4570	3368-31
μPC4741	3371-45
μPC494	3396-42
μPC566	3319-14
μPC574J	3317-6
μPC575	3326-45
μPC6012	2862-49
μPC603	2849-35
μPC610	2859-60
μPC624	2852-26
μPC646	2848-67
μPC647	2848-68
μPC648	2862-50
μPC741	3330-25
μPC741	3355-31
μPC751	2892-29
μPC752	2892-30
μPC754	3306-60
μPC767	3382-83
μPC7805	3384-65
μPC7808	3386-33
μPC7812	3387-12
μPC7815	3388-11
μPC7818	3388-111
μPC7824	3389-74
μPC78L05	3384-12
μPC78L08	3386-11
μPC78L10	3386-88
μPC78L12	3386-115
μPC78L15	3387-117
μPC78M05	3384-41
μPC78M08	3386-21
μPC78M10	3386-97
μPC78M12	3386-128
μPC78M15	3387-130
μPC78M18	3388-101
μPC78M24	3389-64
μPC7905	3390-23
μPC7908	3390-112
μPC7912	3391-30
μPC7915	3391-96
μPC7918	3392-12
μPC7924	3392-53
μPC803	3368-43
μPC811	3346-145
μPC812	3363-44
μPC813	3346-146
μPD1913	3323-19
μPD1937	3322-170
μPD1943	3323-20
μPD1962	3320-91
μPD1963	3320-92
μPD1986	3323-21
μPD1987	3323-1
μPD1990A	1469-105
μPD2006	3320-93
μPD2147A-25	3839-87
μPD2147A-35	3839-101
μPD2147A-45	3839-116
μPD2149	3836-11
μPD2149-1	3835-99
μPD2149-2	3835-74
μPD2149-35	3835-75
μPD2149-45	3835-100
μPD2149-55	3836-12
μPD2167-2	3844-80
μPD2167-3	3844-61
μPD22100	3378-11
μPD231000	3853-103
μPD231000-1	3853-98
μPD231000-2	3853-92
μPD23128	3852-28
μPD23128A	3852-6
μPD23128E	3852-29
μPD23256A	3852-106
μPD2364A	3850-66
μPD2364A-1	3850-46
μPD2364E	3851-1
μPD2364E-1	3850-79
μPD2364E-25	3851-2
μPD23C1000	3853-77
μPD23C128E	3851-125
μPD23C128E-1	3851-110
μPD23C2000	3853-89
μPD23C256E	3852-93
μPD23C256E-1	3852-80
μPD23C64E	3850-58
μPD23C64E-1	3850-43
μPD27128	3823-34
μPD27128-2	3823-9
μPD27128-2	3823-10
μPD27128-3	3823-58
μPD27128-4	3823-74
μPD27128-4	3823-75
μPD27256	3824-50
μPD27256-3	3824-72
μPD2764	3822-16
μPD2764-2	3821-101
μPD2764-3	3822-44
μPD2764-4	3822-69
μPD27C256-15	3824-5
μPD27C256-20	3824-16
μPD27C256-25	3824-39
μPD27C256-30	3824-63
μPD27C256A-15	3824-8
μPD27C256A-20	3824-17
μPD27C64-20	3821-89
μPD27C64-25	3822-3
μPD27C64-30	3822-32
μPD2833	3375-37
μPD2834	3375-38
μPD3301	1456-115
μPD3301	1457-129
μPD3301	1457-307
μPD379	2901-37
μPD4016-1	3839-48
μPD4016-2	3839-20
μPD4016-3	3838-92
μPD4016-5	3838-41
μPD411000-12	3830-60
μPD411000-15	3830-71
μPD411001-10	3830-49
μPD411001-12	3830-61
μPD411001-15	3830-72
μPD41100D-10	3830-50
μPD41221-70	3828-72
μPD41221-90	3828-73
μPD41256-12	3829-14
μPD41256-15	3829-48
μPD41256-20	3829-70
μPD41257-12	3829-15
μPD41257-15	3829-49
μPD41257-20	3829-71
μPD41264-12	3827-118
μPD41264-15	3828-2
μPD41416-12	3826-97
μPD41416-15	3826-102
μPD41416-20	3826-106
μPD41464-10	3827-101
μPD41464-12	3827-112
μPD41464-15	3827-127
μPD416-2	3826-74
μPD416-3	3826-60
μPD416-5	3826-51
μPD4164-10	3827-17
μPD4164-12	3827-35
μPD4164-15	3827-62
μPD4164-20	3827-83
μPD4168-15	3826-39
μPD4168-20	3826-41
μPD4168-25	3826-42
μPD41832-12	3826-113
μPD41832-15	3827-3
μPD4265-12	3827-22
μPD4265-15	3827-44
μPD42832-12	3826-111
μPD42832-15	3827-1
μPD4311-35	3844-18
μPD4311-45	3844-34
μPD4311-55	3844-51
μPD4314-35	3841-27
μPD4314-45	3841-67
μPD4314-55	3842-7
μPD43256-10	3846-82
μPD43256-10L	3846-83
μPD43256-12	3846-84
μPD43256-12L	3846-85
μPD43256-15	3846-86
μPD43256-15L	3846-87
μPD4361-40	3847-1
μPD4361-45	3847-2
μPD4361-55	3847-20
μPD4361-70	3847-42
μPD4362-45	3845-3
μPD4362-55	3845-35
μPD4362-70	3845-62
μPD4364-12	3843-39
μPD4364-12L	3843-40
μPD4364-12LL	3843-41
μPD4364-15	3843-63
μPD4364-15L	3843-64
μPD4364-15LL	3843-65
μPD4364-20	3843-88
μPD4364-20L	3843-89
μPD4364-20LL	3843-90
μPD446	3839-50
μPD446-1	3839-31
μPD446-2	3838-115
μPD446-3	3838-70
μPD4464-15	3843-66
μPD4464-15L	3843-67
μPD4464-20	3843-91
μPD4464-20L	3843-92
μPD449	3839-51
μPD449-1	3839-32
μPD449-2	3838-116
μPD449-3	3838-71
μPD5388	3320-56
μPD5555	3383-63
μPD5556	3383-64
μPD610	3326-1
μPD6102	3323-22
μPD6105	3326-2
μPD65002	4452-30
μPD65003	4452-28
μPD65010	4452-35
μPD65020	4453-1
μPD65040	4453-8
μPD65060	4453-11
μPD65100	4453-16
μPD6529	3319-114
μPD6900	2856-1
μPD6950	2837-46
μPD7001	2837-19
μPD7001	1457-77
μPD7001	1469-54
μPD7002	2843-1
μPD7002	1457-78
μPD7002	1469-55
μPD7003	2837-27
μPD7004	2839-1
μPD7008	1460-116
μPD7008A	1460-117
μPD70108-5	1462-90
μPD70108-8	1462-91
μPD70108-8	1427-9
μPD7011	2854-48
μPD70116-10	1437-1
μPD70116-5	1462-92
μPD70116-8	1462-93
μPD70208	1433-22
μPD70216	1437-2
μPD71011	1468-55
μPD71051	2900-1
μPD71051	1459-24
μPD71054	1457-215
μPD71054	1458-12
μPD71057	1457-220
μPD71057	1457-366
μPD71057	1466-80
μPD71071	1466-62
μPD71082	1462-38
μPD71083	1462-30
μPD71084	1461-102
μPD71086	1462-22
μPD71087	1462-11
μPD71088	1461-90
μPD7201A	2901-10
μPD72065	1467-33
μPD7220A	1465-87
μPD7220A	1465-92
μPD7220A-1	1465-88
μPD7220A-2	1465-89
μPD7225	2874-62
μPD7225	1458-16
μPD7227	2874-68
μPD7227	1466-85
μPD7228	2874-69
μPD7228	1466-86
μPD7255	2877-110
μPD7260	1467-90
μPD7261AH	1466-66
μPD7265	1467-1
μPD7281	844-68
μPD7281	1439-13
μPD738000	3853-69
μPD7500	1409-17
μPD7501	1450-95
μPD7501	1409-18
μPD7502	1450-96
μPD7502	1409-19
μPD7503	1450-97
μPD7503	1409-20
μPD7506	1450-86
μPD7506	1409-21
μPD7507	1450-87
μPD7507	1409-22
μPD7507S	1450-88
μPD7507S	1409-23
μPD7508	1450-89
μPD7508	1409-24
μPD7508A	1450-90
μPD7508A	1450-100
μPD7508A	1409-25
μPD7508H	1450-91
μPD7514	1450-98
μPD7517	1450-92
μPD7517	1450-101
μPD7519	1450-102
μPD7519	1409-26
μPD7520	1450-99
μPD7520	1409-27
μPD7527	1450-107
μPD7528	1450-93
μPD7528	1450-103
μPD7537	1450-104
μPD7538	1450-94
μPD7538	1450-105
μPD765A	1459-3
μPD765A	1457-156
μPD765A	1457-323
μPD765A	1467-36
μPD765A	1467-55
μPD765A	1467-62
μPD7720	1469-152
μPD7720A	844-71
μPD7751	3323-140
μPD7752	3323-138
μPD7761	3323-117
μPD7762	3323-118
μPD77P20	844-72
μPD77P20	1469-153
μPD780	1460-66
μPD780	1427-10
μPD780-1	1460-67
μPD780-2	1460-118
μPD7800	1427-11
μPD7801	1427-12
μPD7802	1427-13
μPD7807	1457-481
μPD7807	1427-14
μPD7809	1457-482
μPD7809	1427-15
μPD7810	1460-1
μPD7810	1427-16
μPD7811	1460-2
μPD7811	1427-17
μPD78C05	1427-18
μPD78C06	1427-19
μPD78P09	1457-483
μPD78P09	1427-20
μPD791	3400-68
μPD792	3400-63
μPD795	3400-20
μPD795	3400-56
μPD799	3400-64
μPD8035L	1456-33
μPD8035L	1427-21
μPD8039L	1456-34
μPD8039L	1427-22
μPD8041	1457-26
μPD8041	1457-274
μPD8041	1457-432
μPD8041A	1457-27
μPD8048	1456-80
μPD8048	1427-23
μPD8049	1456-81
μPD8049	1427-24
μPD8085A-2	1457-294
μPD8085A-2	1427-25
μPD8085AH	1457-295
μPD8086	1461-46
μPD8086-2	1461-47
μPD8086-2	1437-3
μPD8088	1462-49
μPD8088	1433-28
μPD8088-2	1462-50
μPD80C35	1456-35
μPD80C35	1427-26
μPD80C39	1456-36
μPD80C48	1456-2
μPD80C48	1427-27
μPD80C49	1456-82
μPD8155	1457-7
μPD8155	1457-416
μPD8156	1457-8
μPD8156	1457-417
μPD8237A-5	1457-359
μPD8243	1459-13
μPD8243	1457-331
μPD8251	1459-25
μPD8251	1457-204
μPD8251	1457-345
μPD8251A	2901-26
μPD8251A	1459-26
μPD8251A	1457-205
μPD8251A	1457-346
μPD8251AF	2901-27
μPD8251AF	1459-27
μPD8253-2	1459-42
μPD8253-2	1457-235
μPD8253-2	1457-390
μPD8253-5	1459-43
μPD8253-5	1457-236
μPD8253-5	1457-391
μPD8255	1459-48
μPD8255	1457-244
μPD8255A-2	1457-279
μPD8255A-5	1459-49
μPD8255A-5	1457-245
μPD8255A-5	1457-398
μPD8257	1457-221
μPD8257	1457-367
μPD8257-5	1457-222
μPD8257-5	1457-368
μPD8259	1459-35
μPD8259	1457-227
μPD8259	1457-379
μPD8259-2	1459-36
μPD8259-2	1457-228
μPD8259-2	1457-380
μPD8279-5	1457-186
μPD82C43	1459-14
μPD82C43	1457-332
μPD833	3320-57
μPD848	3319-115
μPD8741A	1457-275
μPD8741A	1457-433
μPD8748	1456-11
μPD8748	1427-28
μPD8749	1456-12
μPD8755A	1459-52
μPD8755A	1457-320
μPD8755A	1457-402
μPD9259A	1459-37
μPD9259A	1457-229
μPD9259A	1457-381
μPD9306	1458-7

OKI Semiconductor

Device	Page-Line
77C20	★ 4733
M5219B	★ 4733 2874-96
M5221	★ 4733 2874-97
M5238	★ 4733 2874-91
M5259	★ 4733 2874-94
M5260	★ 4733 2874-103
M5265	★ 4733 2874-100
M5278	★ 4733 2874-98
M5279	★ 4733 2874-101
M5280	★ 4733 2874-85
M5282	★ 4733 2874-86
M5298	★ 4733 2874-99
M5299	★ 4733 2874-102
M58292	★ 4733 2874-89
M58398	★ 4733 2874-95
M6222	★ 4733 2874-64
M6239	★ 4733
M6240	★ 4733 2874-66
M6255	★ 4733 2874-67
M6265	★ 4733 2874-63
M6284	★ 4733
M6285	★ 4733
M6286	★ 4733

¶ Indicates page number in Application Note Directory.
★ Indicates additional data is provided on the page noted.

OKI Semiconductor (Cont'd)

Device	Page-Line
MCM80C51	1457-53
MCM82C43	1459-15
MSA104	3307-5
MSA105	3307-6
MSA4710	★ **4733**
MSA4722	★ **4733**
MSL912R	2877-49
MSL915R	2877-50
MSL916R	2877-51
MSL917R	2877-52
MSL9362	3323-44
MSL9363	3323-45
MSL9510R	2877-53
MSL9511R	2877-54
MSL9650	3808-8
MSL966	2874-109
MSL9662	3808-21
MSL9663	3808-22
MSL9664	3808-19
MSL9665	3808-20
MSM2114	3837-5
MSM2114-2	3836-74
MSM2114-3	3836-108
MSM2128	3838-42
MSM2128-15	3838-93
MSM2128-20	3839-21
MSM2708A	3817-162
MSM27128A	★ **4732** 3823-35
MSM2716A	3819-87
MSM27256-20	★ **4732** 3824-22
MSM27256-25	★ **4732** 3824-44
MSM27256-30	★ **4732** 3824-68
MSM2764A	★ **4732** 3822-70
MSM27C128-20	★ **4732** 3822-103
MSM27C128-25	★ **4732** 3823-20
MSM27C128-30	★ **4732** 3823-46
MSM27C256-07	★ **4732** 3823-111
MSM27C256-10	★ **4732** 3823-112
MSM27C256-12	★ **4732** 3824-1
MSM28101A	3808-23
MSM2816	★ **4732** 3812-54
MSM28201A	3808-24
MSM2864A-25	★ **4732** 3812-123
MSM2864A-30	★ **4732** 3813-2
MSM2864A-35	★ **4732** 3813-3
MSM2916	3849-61
MSM2932	3849-109
MSM2965	3851-31
MSM3716-3	3826-75
MSM37256-15	3829-50
MSM37256-20	3829-72
MSM3732-15	3827-4
MSM3732-20	3827-5
MSM3764-12	★ **4732** 3827-36
MSM3764-15	★ **4732** 3827-63
MSM3764-20	★ **4732** 3827-84
MSM37S64A-15	★ **4732** 3828-60
MSM38128	★ **4733** 3852-61
MSM38128A	★ **4733** 3852-30
MSM38256	★ **4733** 3853-5
MSM38256A	★ **4733** 3852-107
MSM3864	★ **4733** 3850-80
MSM3914A	2880-21
MSM3953	3379-123
MSM41000-10	★ **4732** 3830-51
MSM41000-8	★ **4732** 3830-41
MSM41001-10	★ **4732** 3830-42
MSM41001-8	★ **4732** 3830-40
MSM41004-10	★ **4732** 3829-83
MSM41004-8	★ **4732** 3829-77
MSM41005-10	★ **4732** 3829-78
MSM41005-8	★ **4732** 3829-76
MSM41256-10	★ **4732** 3828-96
MSM41256-12	★ **4732** 3829-16
MSM41256-15	★ **4732** 3829-51
MSM41257A-10	★ **4732** 3828-97
MSM41257A-12	★ **4732** 3829-17
MSM41257A-15	★ **4732** 3829-52
MSM41464-10	★ **4732** 3827-102
MSM41464-12	★ **4732** 3827-113
MSM5104-2	3840-53
MSM5104-3	3840-80
MSM5114	3836-117
MSM5114-2	3836-55
MSM5114-3	3836-90
MSM5126-20	★ **4732** 3838-117
MSM5126-25	★ **4732** 3839-33
MSM5128	★ **4732**
MSM5128	★ **4733** 3838-118
MSM5128-12	★ **4732**
MSM5128-12	★ **4733** 3838-37
MSM5128-15	★ **4732**
MSM5128-15	★ **4733** 3838-87
MSM5128-20	★ **4732**
MSM5128-20	★ **4733** 3838-119
MSM5129-15	3838-72
MSM5129-20	3838-120
MSM5165-10	★ **4732** 3843-22
MSM5165-15	★ **4732** 3843-68
MSM5188	★ **4732**
MSM5204	★ **4733** 2837-18
MSM5205	★ **4733** 3323-141
MSM5218	3323-107
MSM5219	2877-3
MSM5238	2877-106
MSM5248	★ **4733** 3323-142
MSM5249	3378-94
MSM531000	★ **4733** 3853-68
MSM53256	★ **4733** 3852-94
MSM5509	3320-94
MSM5523	3320-107
MSM5525	3320-108
MSM5525	3321-75
MSM5526	3321-63
MSM5528	3320-95
MSM5550	3320-58
MSM5557	3320-82
MSM5558	3320-96
MSM5816	3327-155
MSM5819	2895-131
MSM58282	1451-69
MSM58283	1451-70
MSM58292	1451-71
MSM58293	1451-72
MSM5832	1451-63
MSM5832	1468-36
MSM58321	★ **4732** 1451-64
MSM58371	1451-68
MSM5838	1451-67
MSM5839	1451-66
MSM5840	★ **4732** 1409-28
MSM5840RS	★ **4732** 1409-29
MSM5842	1451-61
MSM58421	★ **4732** 1451-59
MSM58421GS	★ **4732** 1409-30
MSM58422	1451-60
MSM584223RS	1409-31
MSM5845	1451-62
MSM5845	1409-32
MSM6052	★ **4732**
MSM6202	3323-143
MSM6203	807-105
MSM6212	★ **4733** 3323-144
MSM6243	★ **4733** 3323-145
MSM6250	★ **4733**
MSM6252	★ **4732**
MSM6253	★ **4733** 3323-115
MSM6254	★ **4733** 3382-55 ★ **4733** 1468-77
MSM6258	★ **4733**
MSM6281	★ **4733** 1466-116
MSM6291	★ **4733** 1466-115
MSM62C42	★ **4732**
MSM6404	★ **4732**
MSM6431	★ **4732**
MSM6442	★ **4732**
MSM6502	★ **4732**
MSM68321	1469-107
MSM6910	3377-58
MSM6912	★ **4733** 3379-74
MSM6913	★ **4733**
MSM6914	★ **4733**
MSM6917	3377-150
MSM6920	★ **4733** 3381-119
MSM6926	★ **4733** 3379-125
MSM6927	★ **4733** 3379-124
MSM6928	★ **4733**
MSM6932AS	★ **4733** 3377-68
MSM6933AS	★ **4733** 3377-129
MSM6945	★ **4733** 3381-120
MSM6946	★ **4733** 3379-117
MSM6947	★ **4733** 3379-115
MSM6950	★ **4733** 3377-2
MSM6956	★ **4732**
MSM6962RS	★ **4733** 3377-69
MSM6963	★ **4733** 3377-130
MSM6992	★ **4733** 1465-23
MSM71000	★ **4733** 4453-19
MSM72000	★ **4733** 4453-20
MSM73000	★ **4733** 4453-21
MSM74000	★ **4733** 4453-22
MSM7500	4453-24
MSM75000	★ **4733**
MSM75H000	★ **4733** 4453-25
MSM76H000	★ **4733** 4453-26
MSM77H000	★ **4733** 4453-27
MSM78H000	★ **4733** 4453-28
MSM79H000	★ **4733** 4453-23
MSM80C31	★ **4732**
MSM80C35	★ **4732** 1456-37 ★ **4732** 1427-29
MSM80C39	★ **4732** 1456-38 ★ **4732** 1427-30
MSM80C40	★ **4732** 1456-39
MSM80C48	★ **4732** 1456-83 ★ **4732** 1427-31
MSM80C49	★ **4732** 1456-84
MSM80C50	★ **4732** 1456-85
MSM80C51	★ **4732**
MSM80C58	807-106
MSM80C59	★ **4732**
MSM80C85A	★ **4732** 1457-296 ★ **4732** 1427-32
MSM80C86	★ **4732** 1461-50
MSM80C88	★ **4732** 1462-51
MSM8155	1457-418
MSM81C55	★ **4732** 1457-9 1457-419
MSM8255A	1457-246
MSM82C12	★ **4732** 1457-181
MSM82C37	★ **4732**
MSM82C43	★ **4732**
MSM82C51A	★ **4732** 2901-28 ★ **4732** 1459-28 1457-206 1457-347
MSM82C53-5	★ **4732** 1457-392
MSM82C55A	★ **4732** 1457-247
MSM82C57	1457-369
MSM82C59A	★ **4732** 1461-123
MSM82C84A	★ **4732** 1461-106
MSM82C88	★ **4732** 1461-91
MSM83C55	★ **4732** 1457-15 1457-426
MSM83C59	★ **4732**
MSM8755	1457-321
MSM90000	★ **4733** 4481-4
MSM91000	★ **4733** 4481-3
MSM9353	2875-19
MSM9356	2875-20
OCS27	★ **4733**
OCS29	★ **4733**
OCS30	★ **4733**
OCS31	★ **4733**
SAS-1	★ **4733**
SAS-2	★ **4733**
SAS-4	★ **4733**

Orion Instruments

Device	Page-Line
UDL	1819-14

Panasonic

Device	Page-Line
AN1324	3335-4
AN1339	3315-42
AN1358	3367-49
AN1458	3363-78
AN1741	3350-29
AN4250	3355-13
AN6550	3367-15
AN6551	3367-16
AN6552	3367-17
AN6554	3371-42
AN6555	3367-1
AN6556	3366-51
AN6557	3363-40
AN6558	3363-41
AN6561	3367-51
AN6562	3367-50
AN6564	3335-5
AN6570	3350-30
AN6571	3363-80
AN6572	3363-79
AN6573	3350-31
AN6593	3355-14
AN6912	3316-25
AN7805	3384-66
AN7806	3385-89
AN7807	3385-133
AN7808	3386-34
AN7809	3386-83
AN7810	3386-101
AN7818	3388-112
AN7820	3389-38
AN7824	3389-75
AN78L04	3384-4
AN78L05	3384-13
AN78L06	3385-72
AN78L07	3385-128
AN78L08	3386-12
AN78L09	3386-79
AN78L10	3386-89
AN78L12	3386-116
AN78L15	3387-118
AN78L18	3388-95
AN78L20	3389-23
AN78L24	3389-55
AN78M06	3385-80
AN78M07	3385-132
AN78M08	3386-22
AN78M10	3386-90
AN78M12	3386-129
AN78M15	3388-1
AN78M18	3388-102
AN78M20	3389-28
AN78M24	3389-65
AN78N05	3384-33
AN78N06	3385-75
AN78N07	3385-131
AN78N08	3386-16
AN78N09	3386-82
AN78N10	3386-94
AN78N12	3386-121
AN78N15	3387-123
AN78N18	3388-98
AN78N20	3389-26
AN78N24	3389-58
AN7905	3390-24
AN7906	3390-92
AN7907	3390-101
AN7909	3390-127
AN7910	3391-3
AN7912	3391-31
AN7915	3391-97
AN7918	3392-13
AN7920	3392-33
AN7924	3392-54
AN79L04	3390-1
AN79L05	3390-8
AN79L06	3390-89
AN79L12	3391-12
AN79L15	3391-76
AN79L18	3392-7
AN79L20	3392-30
AN79L24	3392-50
AN79N04	3390-2
AN79N05	3390-11
AN79N06	3390-90
AN79N07	3390-100
AN79N08	3390-103
AN79N09	3390-126
AN79N10	3391-1
AN79N12	3391-19
AN79N15	3391-84
AN79N18	3392-8
AN79N20	3392-31
AN79N24	3392-51
DN6835	891-70
DN6837	891-71
DN6838	891-72
DN6839	891-73
DN74LS00	871-31
DN74LS01	871-181
DN74LS02	874-30
DN74LS03	871-182
DN74LS04	857-121
DN74LS05	857-168
DN74LS08	869-116
DN74LS09	869-155
DN74LS10	870-148
DN74LS107	868-10
DN74LS109	867-132
DN74LS11	869-32
DN74LS112	868-99
DN74LS113	868-61
DN74LS114	868-127
DN74LS12	870-180
DN74LS123	880-156
DN74LS125A	856-109
DN74LS13	887-119
DN74LS132	888-6
DN74LS136	874-78
DN74LS138	863-122
DN74LS139	863-22
DN74LS14	888-44
DN74LS145	862-110
DN74LS15	869-60
DN74LS151	879-180
DN74LS153	877-146
DN74LS155	863-86
DN74LS156	863-55
DN74LS157	879-15
DN74LS158	878-100
DN74LS160A	860-168
DN74LS161A	858-159
DN74LS162	861-18
DN74LS163A	859-14
DN74LS164	882-12
DN74LS164	3856-54
DN74LS170	877-12
DN74LS173	866-19
DN74LS174	866-57
DN74LS175	864-289
DN74LS190	861-175
DN74LS191	859-183
DN74LS192	861-143
DN74LS193	860-43
DN74LS194A	881-141
DN74LS195A	881-51
DN74LS196	860-126
DN74LS197	858-104
DN74LS20	870-20
DN74LS21	868-167
DN74LS22	870-96
DN74LS240	884-106
DN74LS241	884-108
DN74LS244	884-107
DN74LS245	885-115
DN74LS251	880-57
DN74LS253	878-52
DN74LS257A	879-54
DN74LS258A	878-140
DN74LS26	871-127
DN74LS260	865-22
DN74LS266	874-173
DN74LS27	865-60
DN74LS279	875-86
DN74LS28	874-31
DN74LS283	856-52
DN74LS290	860-86
DN74LS293	859-76
DN74LS30	872-33
DN74LS32	873-59
DN74LS33	865-81
DN74LS365A	857-22
DN74LS366A	858-32
DN74LS367A	857-23
DN74LS368A	858-33
DN74LS37	871-71
DN74LS373	876-20
DN74LS38	871-111
DN74LS386	874-128
DN74LS390	861-45
DN74LS393	859-36
DN74LS395A	881-106
DN74LS40	870-64
DN74LS42	862-140
DN74LS490	861-46
DN74LS51	872-98
DN74LS54	872-176
DN74LS55	872-142
DN74LS73	868-11
DN74LS74A	864-244
DN74LS75	875-52

Arranged alphanumerically from left to right.

Panasonic (Cont'd)

Device	Page-Line
DN74LS76	868-38
DN74LS78	867-148
DN74LS83A	856-53
DN74LS85	854-60
DN74LS86	874-129
DN74LS90	860-87
DN74LS92	862-23
DN74LS93	859-77
DN74LS95B	881-80
DN834	891-74
DN835	891-75
DN837	891-76
DN838	891-77
DN839	891-78
MN1400	1450-3
	¶ 380-8
	1409-33
MN1402	1450-4
	¶ 380-8
	1409-34
MN1403	1450-5
MN1403	1409-35
MN1404	1450-6
MN1404	1409-36
MN1405	1450-7
MN1405	1411-1
MN1430	1450-8
MN1430	1411-2
MN1432	1450-9
MN1432	1411-3
MN1435	1450-10
MN1435	1411-4
MN1450	1450-11
MN1450	1411-5
MN1453	1450-12
MN1453	1411-6
MN1454	1450-13
MN1454	1411-7
MN1455	1450-14
MN1455	1411-8
MN1498	1450-17
	¶ 380-8
	1411-9
MN1499	1450-15
	¶ 380-8
	1411-10
MN1499A	1450-16
MN1499A	1411-11
MN1541	1450-18
MN1541	1411-12
MN1542	1450-19
MN1542	1411-13
MN1544	1450-20
MN1544	1411-14
MN1562	1450-21
MN1562	1411-15
MN1564	1450-22
MN1564	1411-16
MN1591	1450-24
MN1599	1450-23
MN3001	3319-77
MN3001	3398-46
MN3002	3398-58
MN3003	3398-48
MN3004	3398-59
MN3005	3398-57
MN3006	3398-52
MN3007	3398-49
MN3008	3398-53
MN3009	3398-54
MN3010	3319-78
MN3010	3398-47
MN3011	3398-55
MN3012	3398-56
MN3101	3398-61
MN3204	3319-79
MN3204	3398-50
MN3207	3319-80
MN3207	3398-51
MN4001B	827-164
MN4002B	827-41
MN4007UB	810-161
MN4011B	825-94
MN4012B	824-151
MN4013B	820-57
MN4015B	834-165
MN40161B	812-25
MN4016B	2824-52
MN4017B	814-95
MN4023B	825-25

Device	Page-Line
MN4024B	813-58
MN4025B	827-94
MN4027B	823-41
MN4028B	817-37
MN4029B	816-122
MN4030B	828-67
MN4035B	835-69
MN4040B	813-146
MN4049B	809-37
MN4050B	809-82
MN4052B	2830-21
MN4053B	2826-49
MN4066B	2824-12
MN4069UB	811-62
MN4070B	828-68
MN4071B	826-162
MN4072B	826-76
MN4073B	824-32
MN4075B	826-113
MN4076B	820-164
MN4078B	828-5
MN4081B	824-89
MN4085B	826-32
MN4093B	838-168
MN41256-12	★ **1136**
	3829-18
MN41256-15	★ **1136**
	3829-53
MN4164-15	3827-64
MN4164-20	3827-85
MN4503B	809-173
MN4511B	819-158
MN4511B	2875-157
MN4512B	833-63
MN4516B	812-99
MN4518B	815-189
MN4520B	812-161
MN4528B	834-60
MN4538B	834-61
MN4539B	832-6
MN4556B	817-75
MN4585B	807-58
MN74HC02	827-129
MN74HC08	824-61
MN74HC10	824-189
MN74HC107	823-125
MN74HC109	823-4
MN74HC11	824-9
MN74HC112	823-80
MN74HC123	834-74
MN74HC133	825-194
MN74HC138	818-16
MN74HC139	817-112
MN74HC14	839-21
MN74HC151	833-37
MN74HC154	819-26
MN74HC157	832-70
MN74HC158	832-106
MN74HC160	814-174
MN74HC161	811-184
MN74HC163	811-130
MN74HC174	821-8
MN74HC192	815-37
MN74HC193	812-59
MN74HC20	824-126
MN74HC221	834-25
MN74HC240	839-81
MN74HC241	839-155
MN74HC242	838-89
MN74HC243	838-122
MN74HC244	840-76
MN74HC245	841-129
MN74HC266	828-98
MN74HC27	827-66
MN74HC273	821-67
MN74HC30	825-155
MN74HC32	826-137
MN74HC365	809-130
MN74HC366	810-4
MN74HC367	809-131
MN74HC368	810-5
MN74HC373	829-133
MN74HC374	822-73
MN74HC390	815-151
MN74HC393	812-179
MN74HC4002	827-14
MN74HC4040	813-128
MN74HC4049	809-25
MN74HC4050	809-69
MN74HC4051	2830-121
MN74HC4052	2830-22
MN74HC4053	2826-50

Device	Page-Line
MN74HC4066	2824-13
MN74HC4075	826-92
MN74HC4078	827-196
MN74HC42	817-15
MN74HC51	826-52
MN74HC74	820-26
MN74HC75	830-145
MN74HC76	823-5
MN74HC85	807-39
MN74HC86	828-36

Panatech Semiconductor

Device	Page-Line
10P8	★ **4736**
	4473-33
10P8AP-55	★ **4736**
	4472-90
10P8BP-35	★ **4736**
	4471-91
12P6	★ **4736**
	4473-34
12P6BP-35	★ **4736**
	4471-92
14P4	★ **4736**
	4473-35
14P4AP-55	★ **4736**
	4472-91
14P4BP-35	★ **4736**
	4471-93
16P2	★ **4736**
	4473-36
16P2AP-55	★ **4736**
	4472-92
16P2BP-35	★ **4736**
	4471-94
16P8	★ **4736**
	4473-37
16RP4AP-55	★ **4736**
	4472-93
16RP4BP-35	★ **4736**
	4471-95
16RP6	★ **4736**
	4473-38
16RP6AP-55	★ **4736**
	4472-94
16RP6BP-35	★ **4736**
	4471-96
16RP8	★ **4736**
	4473-39
16RP8AP-55	★ **4736**
	4472-95
16RP8BP-35	★ **4736**
	4471-97
ASP6AP-55	4472-96
RD27C256-15	★ **4133**
	3824-6
RD27C256-20	★ **4133**
	3824-18
RD27C256-25	★ **4133**
	3824-40
RD27C256-30	★ **4133**
	3824-64
RD27C32-25	★ **4133**
	3820-78
RD27C32-30	★ **4133**
	3820-85
RD27C32-35	★ **4133**
	3820-93
RD27C64-28	★ **4133**
	3822-4
RD27C64-30	★ **4133**
	3822-33
RF3L06	★ **4133**
	3324-58
RF3P01	★ **4133**
RP231024B	★ **4132**
	3853-99
RP231024D	★ **4132**
	3853-93
RP23256D	★ **4132**
	3853-6
RP23256E	★ **4132**
	3852-108
RP23257D	★ **4132**
	3853-7
RP23257E	★ **4132**
	3852-109
RP23512B	★ **4132**
	3853-60
RP23512D	★ **4132**
	3853-55

Device	Page-Line
RP23C128D	★ **4132**
	3853-109
RP23C128E	★ **4132**
	3853-107
RP23C128H	★ **4132**
	3851-107
RP23C129D	★ **4132**
	3853-110
RP23C129E	★ **4132**
	3853-108
RP23C129H	★ **4132**
	3851-108
RP23C256D	★ **4132**
	3852-120
RP23C256E	★ **4132**
	3852-95
RP23C257D	★ **4132**
	3852-121
RP23C257E	★ **4132**
	3852-96
RP2X04	★ **4133**
RP5C01	★ **4133**
	1468-33
RP5C06	★ **4133**
	890-65
RP5C15	★ **4133**
	1468-34
RP5C16	★ **4133**
	3325-63
RP5C17	★ **4133**
	3325-64
RP5GH05	★ **4735**
	4453-29
RP5GH16	★ **4735**
	4453-30
RP5GH23	★ **4735**
	4453-31
RP5GH29	★ **4735**
	4453-32
RP5GH38	★ **4735**
	4453-33
RP5GH55	★ **4735**
	4453-34
RP5H01	★ **4133**
	3814-63
RP65C02	★ **4133**
	1453-54
RP65C02A	★ **4133**
	1453-55
TMS27C512	3824-100
TMS27C512-2	3824-91
TMS27C512-3	3824-107
TMS27C512-4	3825-1
TMX27PC128	3823-18
TMX27PC128-2	3822-101
TMX27PC128-3	3823-44
TMX27PC128-4	3823-65

PCAD

Device	Page-Line
CAE	4927-1
CAE	4927-2
CAE-1	4484-51
CAE-1	4927-1
CAE-1, -2	4460-47
CAE-1, -2	4460-52
CAE-1, -2	4460-56
CAE-1, -2	4460-60
CAE-1, -2	4460-71
CAE-1, -2	4460-74
CAE-1, -2	7761-12
CAE-1, CAE-2	4459-48
CAE-1, CAE-2	4483-19
CAE-1 (-2)	4460-23
CAE-1 (-2)	4483-50
CAE-1 (-2)	4483-51
CAE-2	4461-39
CAE-2	4484-31
CAE-2	4927-2
CUPL	5007-3
CUPL	5058-79
EDA	4927-3
EDA-1	4927-3
PC-CAPSs	5057-55
PC-CARDS	4986-2
PC-CARDS	4986-3
PC LOGS	5058-67
PCB	4928-1
PCB	4928-2
PCB	4928-3
PCB	4986-2
	(Continued)

Device	Page-Line
PCB	4986-1
PCB	4986-3
PCB-1	4928-1
PCB-1	4986-2
PCB-2	4928-2
PCB-2	4986-1
PCB-3	4928-3
PCB-3	4986-3

Precision Monolithics Inc.

Device	Page-Line
8080	¶ 388-16
AMP-01	★ **3639**
	3306-78
	3348-114
	3330-130
AMP-01A	★ **3639**
	3337-38
AMP-01B	★ **3639**
	3339-2
AMP01E	3337-39
AMP01F	3339-3
BUF-03A	3329-21
BUF-03B	3329-24
BUF-03E	3329-20
BUF-03F	3329-23
CMP-01	3312-17
	¶ 386-8
	¶ 386-9
CMP-01C	3312-35
CMP-01E	3312-18
CMP-02	3312-15
	¶ 429-11
CMP-02C	3312-34
CMP-02E	3312-16
CMP-04B	3315-22
CMP-04F	3315-23
CMP-05A	3312-5
CMP-05B	3312-13
CMP-05E	3312-6
CMP-05F	3312-14
CMP-404A	3315-24
CMP-404B	3315-36
CMP-404E	3315-25
CMP-404F	3315-37
DAC-01	★ **3637**
	2849-36
	¶ 390-14
DAC-01A	★ **3637**
	2849-23
DAC-01B	★ **3637**
	2849-37
DAC-01C	★ **3637**
	2849-38
DAC-01D	★ **3637**
	2850-2
DAC-01F	★ **3637**
	2849-39
DAC-01H	★ **3637**
	2849-40
DAC-02AC	★ **3637**
	2859-62
DAC-02BC	★ **3637**
	2859-63
DAC-02CC	★ **3637**
	2859-65
DAC-02DD	★ **3637**
	2859-69
DAC-03AD	★ **3637**
	2859-8
DAC-03BD	★ **3637**
	2859-9
DAC-03CD	★ **3637**
	2859-43
DAC-03DD	★ **3637**
	2859-53
DAC-05A	★ **3637**
	2859-66
DAC-05C	★ **3637**
	2859-67
DAC-05E	★ **3637**
	2859-56
DAC-05G	★ **3637**
	2859-68
DAC-06B	★ **3637**
	2859-50
DAC-06C	★ **3637**
	2859-54
DAC-06E	★ **3637**
	2859-7

Device	Page-Line
DAC-06F	★ **3637**
	2859-42
DAC-06G	★ **3637**
	2859-52
DAC-08	★ **3637**
DAC-08	★ **3639**
	2852-13
	¶ 386-4
	¶ 388-13
	¶ 388-14
	¶ 389-4
	¶ 390-19
	¶ 391-1
	¶ 392-13
	¶ 392-21
	¶ 393-12
	¶ 406-7
DAC-08A	★ **3637**
DAC-08A	★ **3639**
	2851-5
DAC-08C	★ **3637**
DAC-08C	★ **3639**
	2854-35
DAC-08E	★ **3637**
DAC-08E	★ **3639**
	2852-27
DAC-08H	★ **3637**
DAC-08H	★ **3639**
	2851-6
DAC-100	¶ 386-8
DAC-100	¶ 386-9
DAC-100	¶ 390-14
DAC-100A	2860-8
DAC-100A	2860-9
DAC-100B	2858-26
DAC-100C	2859-15
DAC-100C	2859-16
DAC-100D	2859-48
DAC-100D	2859-49
DAC-10B	★ **3637**
	2856-32
DAC-10C	★ **3637**
	2856-33
DAC-10F	★ **3637**
	2856-34
DAC-10G	★ **3637**
	2860-1
	2859-51
DAC-1408A-6	2854-55
DAC-1408A-7	2854-41
DAC-1408A-8	2852-48
DAC-1508A-8	2852-49
DAC-20	¶ 388-12
DAC-20	¶ 390-19
DAC-20	¶ 393-12
DAC-208A	★ **3637**
	2856-13
DAC-208B	★ **3637**
	2856-15
DAC-208E	★ **3637**
	2856-14
DAC-208F	★ **3637**
	2856-16
DAC-20C	2856-12
DAC-210A	★ **3637**
	2859-57
DAC-210B	★ **3637**
	2859-58
DAC-210E	★ **3637**
	2859-59
DAC-210F	★ **3637**
	2859-64
DAC-210G	★ **3637**
	2859-61
DAC-312B	★ **3637**
	2868-22
DAC-312E	★ **3637**
	2866-25
DAC-312F	★ **3637**
	2868-23
DAC-76	¶ 387-11
DAC-76	¶ 389-16
DAC-76	¶ 393-12
DAC-8012	★ **3637**
	2861-22
DAC-808A	1469-43
DAC-808B	1469-44
DAC-808E	1469-45
DAC-808F	1469-46
DAC-808G	1469-47
DAC-8212	2861-23

¶ Indicates page number in Application Note Directory.
★ Indicates additional data is provided on the page noted.

Precision Monolithics Inc. (Cont'd)

Device	Page-Line
DAC-86	¶ 388-6
DAC-86	¶ 395-14
DAC-86C	★ 3637
	2856-11
	2859-77
	2869-41
DAC-86E	★ 3637
	2856-6
	2859-76
	2869-38
DAC-87	¶ 388-6
DAC-87	¶ 395-14
DAC-888A	★ 3637
	2851-27
DAC-888B	★ 3637
	2852-42
DAC-888E	★ 3637
	2851-28
DAC-888F	★ 3637
	2852-43
DAC-88E	★ 3637
	2856-7
	2859-74
DAC-89E	★ 3637
	2856-8
	2859-75
DAC100	★ 3637
DAC20	★ 3637
DMX-88E	2830-186
DMX-88F	2830-188
GAP-01A	3398-65
GAP-01B	3398-66
GAP-01E	3398-67
GAP-01F	3398-68
JM10104	★ 3640
JM10106	★ 3640
JM11301	★ 3640
JM11302	★ 3640
JM11401	★ 3640
JM11406	★ 3640
M38510	★ 3640
MAT-01	3309-103
	¶ 420-15
MAT-01A	3309-104
MAT-01G	3309-105
MAT-02A	★ 3639
	3309-130
MAT-02B	★ 3639
	3309-131
MAT-02E	★ 3639
	3309-132
MAT-02F	★ 3639
	3309-133
MUX-08	¶ 401-3
MUX-08A	★ 3639
	2830-181
MUX-08B	★ 3639
	2830-187
MUX-08E	★ 3639
	2830-179
MUX-08F	★ 3639
	2830-184
MUX-16	¶ 401-3
MUX-16A	★ 3639
	2831-98
MUX-16B	★ 3639
	2831-100
MUX-16E	★ 3639
	2831-99
MUX-16F	★ 3639
	2831-101
MUX-24	¶ 401-3
MUX-24A	2830-74
MUX-24B	2830-78
MUX-24E	2830-75
MUX-24F	2830-79
MUX-28	¶ 401-3
MUX-28A	2831-35
MUX-28B	2831-37
MUX-28E	2831-36
MUX-28F	2831-38
MUX-88	¶ 401-3
MUX-88E	2830-180
MUX-88F	2830-185
OP-01	★ 3636
	3343-35
OP-01C	★ 3636
	3353-13
OP-01G	★ 3636
	3353-14
OP-01H	★ 3636
	3343-36
OP-02	★ 3636
	3346-87
OP-02A	★ 3636
	3343-12
OP-02B	★ 3636
	3353-20
OP-02C	★ 3636
	3346-88
OP-02D	★ 3636
	3353-21
OP-02E	★ 3636
	3343-13
OP-04	★ 3636
	3363-14
OP-04A	★ 3636
	3362-5
OP-04B	★ 3636
	3365-20
OP-04C	★ 3636
	3363-15
OP-04D	★ 3636
	3365-21
OP-04E	★ 3636
	3362-6
OP-05	★ 3636
	3341-60
	3342-46
	¶ 406-7
	¶ 407-20
OP-05A	★ 3636
	3341-13
	3340-14
OP-05C	★ 3636
	3345-13
OP-05E	★ 3636
	3341-41
	3342-50
OP-06A	★ 3636
	3339-15
OP-06B	★ 3636
	3343-21
OP-06F	★ 3636
	3343-22
OP-06G	★ 3636
	3345-14
OP-07	★ 3636
OP-07	★ 3639
	3338-39
	¶ 407-5
	¶ 408-9
OP-07A	★ 3636
OP-07A	★ 3639
	3341-42
	3335-41
OP-07C	★ 3636
OP-07C	★ 3639
	3357-213
OP-07D	★ 3636
OP-07D	★ 3639
	3340-26
OP-07E	★ 3636
OP-07E	★ 3639
	3338-51
OP-08	★ 3636
	3347-7
OP-08A	★ 3636
	3340-7
OP-08C	★ 3636
	3344-52
OP-08E	★ 3636
	3340-8
OP-08G	★ 3636
	3344-53
OP-09A	★ 3636
	3369-45
OP-09B	★ 3636
	3370-31
OP-09E	★ 3636
	3370-1
OP-09F	★ 3636
	3370-32
OP-10	3361-42
	¶ 404-11
	¶ 420-15
OP-10A	3361-43
OP-10C	3361-48
OP-10E	3361-44
OP-11A	★ 3636
OP-11A	★ 3639
	3370-2
OP-11B	★ 3636
OP-11B	★ 3639
	3370-33
OP-11C	★ 3636
OP-11C	★ 3639
	3372-3
OP-11E	★ 3636
OP-11E	★ 3639
	3370-3
OP-11F	★ 3636
OP-11F	★ 3639
	3370-34
OP-11G	★ 3636
OP-11G	★ 3639
	3372-4
OP-12	★ 3636
	3347-8
OP-12A	★ 3636
	3340-5
OP-12B	★ 3636
	3340-68
OP-12C	★ 3636
	3344-48
OP-12E	★ 3636
	3340-6
OP-12F	★ 3636
	3340-69
OP-12G	★ 3636
	3344-49
OP-14	★ 3636
	3363-16
	¶ 386-4
OP-14A	★ 3636
	3362-7
OP-14B	★ 3636
	3365-29
OP-14C	★ 3636
	3363-17
OP-14D	★ 3636
	3365-22
OP-14E	★ 3636
	3362-8
OP-15	¶ 393-12
OP-15A	★ 3636
	3342-18
OP-15B	★ 3636
	3344-34
OP-15C	★ 3636
	3346-186
OP-15E	★ 3636
	3342-19
OP-15F	★ 3636
	3344-35
OP-15G	★ 3636
	3346-187
OP-16	¶ 393-12
OP-16A	★ 3636
	3342-22
OP-16B	★ 3636
	3344-38
OP-16C	★ 3636
	3346-190
OP-16E	★ 3636
	3342-23
OP-16F	★ 3636
	3344-39
OP-16G	★ 3636
	3346-191
OP-17	¶ 393-12
OP-17A	★ 3636
	3342-14
OP-17B	★ 3636
	3344-30
OP-17C	★ 3636
	3346-182
OP-17E	★ 3636
	3342-15
OP-17F	★ 3636
	3344-31
OP-17G	★ 3636
	3346-183
OP-20	¶ 407-3
OP-207A	★ 3636
	3338-58
OP-207B	★ 3636
	3338-59
OP-207E	★ 3636
	3340-30
OP-207F	★ 3636
	3340-31
OP-20B	★ 3636
	3333-5
	3334-95
	3338-56
OP-20C	★ 3636
	3333-6
	3334-96
	3340-33
OP-20F	★ 3636
	3333-7
	3334-97
	3338-57
OP-20G	★ 3636
	3333-8
	3334-98
	3340-34
OP-20H	★ 3636
	3333-9
	3334-99
	3340-76
OP-215A	★ 3636
	3362-22
OP-215B	★ 3636
	3333-1
	3334-100
	3363-22
OP-215C	★ 3636
	3333-2
	3334-101
	3363-76
OP-215E	★ 3636
	3344-45
OP-215F	★ 3636
	3333-3
	3334-102
	3363-23
OP-215G	★ 3636
	3333-4
	3334-103
	3363-77
OP-21A	★ 3636
	3340-28
OP-21B	★ 3636
	3333-21
	3339-51
OP-21E	★ 3636
	3340-29
OP-21F	★ 3636
	3333-22
	3339-52
OP-21G	★ 3636
	3333-24
	3340-38
OP-220	★ 3636
	3334-138
OP-220A	★ 3636
	3361-1
OP-220B	★ 3636
	3361-18
OP-220C	★ 3636
	3362-1
OP-220E	★ 3636
	3361-2
OP-220F	★ 3636
	3361-19
OP-220G	★ 3636
	3362-2
OP-220H	★ 3636
	3362-24
OP-221	★ 3636
	3334-139
OP-221A	★ 3636
	3361-3
OP-221B	★ 3636
	3361-22
OP-221C	★ 3636
	3361-49
OP-221E	★ 3636
	3361-4
OP-221F	★ 3636
	3361-23
OP-221G	★ 3636
	3361-50
OP-227A	★ 3636
	3357-194
OP-227B	★ 3636
	3357-207
OP-227C	★ 3636
	3361-11
OP-227E	★ 3636
	3357-195
OP-227F	★ 3636
	3357-208
OP-227G	★ 3636
	3361-12
OP-22A	★ 3636
	3340-73
OP-22B	★ 3636
	3343-5
OP-22E	★ 3636
	3340-74
OP-22F	★ 3636
	3343-6
OP-22H	★ 3636
	3345-8
OP-27A	★ 3636
OP-27A	★ 3639
	3337-17
OP-27B	★ 3636
OP-27B	★ 3639
	3338-12
OP-27C	★ 3636
OP-27C	★ 3639
	3339-26
OP-27E	★ 3636
OP-27E	★ 3639
	3337-18
OP-27F	★ 3636
OP-27F	★ 3639
	3338-13
OP-27G	★ 3636
OP-27G	★ 3639
	3339-22
OP-32	★ 3636
OP-32	★ 3639
	3347-27
	3334-76
OP-32A	★ 3636
OP-32A	★ 3639
	3340-75
OP-32B	★ 3636
OP-32B	★ 3639
	3343-3
OP-32E	★ 3636
OP-32E	★ 3639
	3340-72
OP-32F	★ 3636
OP-32F	★ 3639
	3343-4
OP-32G	★ 3636
OP-32G	★ 3639
	3344-54
OP-37A	★ 3636
OP-37A	★ 3639
	3337-8
OP-37B	★ 3636
OP-37B	★ 3639
	3338-26
OP-37C	★ 3636
OP-37C	★ 3639
	3339-31
OP-37E	★ 3636
OP-37E	★ 3639
	3337-9
OP-37F	★ 3636
OP-37F	★ 3639
	3338-27
OP-37G	★ 3636
OP-37G	★ 3639
	3339-32
OP-400	★ 3636
OP-41A	★ 3636
	3340-96
OP-41B	★ 3636
	3343-55
OP-41E	★ 3636
	3340-97
OP-41F	★ 3636
	3343-54
OP-41G	★ 3636
	3345-19
OP-420B	★ 3636
OP-420B	★ 3639
	3333-16
	3334-195
OP-420C	★ 3636
OP-420C	★ 3639
	3333-17
	3334-196
OP-420F	★ 3636
OP-420F	★ 3639
	3333-18
	3334-197
OP-420G	★ 3636
OP-420G	★ 3639
	3333-19
	3334-198
OP-421B	★ 3636
	3370-16
OP-421C	★ 3636
	3370-53
OP-421F	★ 3636
	3370-17
OP-421G	★ 3636
	3370-54
OP-421H	★ 3636
	3372-43
OP-43	★ 3636
OP-50A	★ 3636
	3357-162
OP-50B	★ 3636
	3357-176
OP-50E	★ 3636
	3357-163
OP-50F	★ 3636
	3357-177
OP-77	★ 3636
OP215E	3362-21
PKD-01	3401-64
PKD-01A	3401-65
PKD-01B	3401-66
PM-108	★ 3636
PM-108	★ 3639
	3347-3
	3346-60
PM-108A	★ 3636
PM-108A	★ 3639
	3342-40
PM-139	★ 3639
	3316-5
PM-139A	★ 3639
	3315-32
PM-148	★ 3636
PM-155	★ 3636
PM-155	★ 3639
	3330-38
	3342-28
PM-155A	★ 3636
PM-155A	★ 3639
	3345-42
PM-156	★ 3636
PM-156	★ 3639
	3352-6
PM-156A	★ 3636
PM-156A	★ 3639
	3345-45
PM-157	★ 3636
	3351-45
PM-157A	★ 3636
	3345-37
PM-2108	★ 3636
	3363-3
PM-2108A	★ 3636
	3361-37
PM-339	3316-26
PM-339A	3315-43
PM-4136	★ 3639
PM-562A	2861-19
PM-562B	2864-13
PM-562F	2864-14
PM-562H	2864-15
PM-725	3345-4
PM-725C	3346-150
PM-741	3353-45
PM-741C	3355-32
PM-747	3366-15
PM562	★ 3637
PM725	¶ 414-11
PM7524	★ 3637
	2850-30
PM7528	★ 3637
	2850-31
PM7533	★ 3637
	2858-21
PM7541A	★ 3637
	2863-33
PM7541B	★ 3637
	2866-44
PM7541E	★ 3637
	2863-34

Arranged alphanumerically from left to right.

Precision Monolithics Inc. (Cont'd)

Device	Page-Line
PM7541F	★ 3637
	2866-45
PM7541G	★ 3637
	2863-35
PM7541H	★ 3637
	2866-46
PM7545	★ 3637
	2864-21
PM7548	2866-11
PM7645	★ 3637
REF-01	★ 3639
	3403-51
	¶ 386-4
REF-01A	★ 3639
	3403-52
REF-01C	★ 3639
	3403-53
REF-01E	★ 3639
	3403-54
REF-01H	★ 3639
	3403-55
REF-02	★ 3639
	3402-120
	3404-149
	¶ 429-11
	¶ 429-15
REF-02A	★ 3639
	3402-121
	3404-150
REF-02C	★ 3639
	3402-122
	3404-151
REF-02D	★ 3639
	3402-123
	3404-152
REF-02E	★ 3639
	3402-124
	3404-153
REF-02H	★ 3639
	3402-125
	3404-154
REF-05A	3402-126
REF-05A	3404-155
REF-05B	3402-127
REF-05B	3404-156
REF-10A	3403-56
REF-10B	3403-57
RPT-82	3380-94
RPT-83	3380-95
SMP10A	3404-63
SMP10B	3404-64
SMP10E	3404-65
SMP10F	3404-66
SMP11A	★ 3639
	3404-67
SMP11B	★ 3639
	3404-68
SMP11E	★ 3639
	3404-69
SMP11F	★ 3639
	3404-70
SMP11G	★ 3639
	3404-71
SMP81E	3404-72
SMP81F	3404-73
SSS725	¶ 406-7
SW-01B	2824-101
SW-01F	2824-102
SW-02B	2824-103
SW-02F	2824-104
SW-03B	2824-95
SW-03F	2824-96
SW-04B	2824-97
SW-04F	2824-98
SW-05B	2823-21
SW-05F	2823-24
SW-05G	2823-25
SW-06B	★ 3639
	2827-99
SW-06F	★ 3639
	2827-100
SW-06G	★ 3639
	2827-101
SW-201B	2824-74
SW-201B	2824-99
SW-201F	2824-76
SW-201F	2824-105
SW-201G	2827-98
SW-202B	2824-75
SW-202B	2824-100
SW-202F	2824-77
SW-202F	2824-106
SW-7510A	2824-82
SW-7510B	2824-83
SW-7510E	2824-84
SW-7510F	2824-85
SW-7511A	2824-86
SW-7511B	2824-87
SW-7511E	2824-88
SW-7511F	2824-89

Raytheon Semiconductor

Device	Page-Line
29613	★ 4134
29621	★ 4134
29623	★ 4134
	3816-53
29631A	★ 4134
	3817-122
	3817-123
29633A	★ 4134
	3817-124
	3817-125
	3817-131
	3817-132
29633C	★ 4134
	3817-151
29651A	★ 4134
	3818-40
29651C	★ 4134
	3818-49
29651M	★ 4134
	3818-54
29653A	★ 4134
	3818-41
29653C	★ 4134
	3818-50
29653M	★ 4134
	3818-55
29671	★ 4134
	3820-59
	3820-60
	3820-67
	3820-68
29671A	★ 4134
	3820-57
	3820-58
	3820-61
	3820-62
29673	★ 4134
	3820-65
	3820-66
	3820-69
	3820-70
29681	★ 4134
	3819-64
29681A	★ 4134
	3819-23
	3819-24
	3819-53
	3819-54
29683	★ 4134
	3819-67
29683A	★ 4134
	3819-25
	3819-26
	3819-55
	3819-56
29V864	3813-15
29V864A	3813-13
29VP864	★ 4137
	3821-68
29VS864	★ 4137
	3821-69
29VX000	★ 4137
39VP864	★ 4137
	3821-54
39VS864	★ 4137
39VX000	★ 4137
CGA12L60	★ 700
CGA12L60	★ 4740
	4454-2
CGA16L68	★ 700
CGA16L68	★ 4740
	4454-3
CGA20L76	★ 700
CGA20L76	★ 4740
	4454-4
CGA24L84	★ 700
CGA24L84	★ 4740
	4454-5
CGA30L90	4454-6
CGA35L12	★ 701
	4454-7
CGA50L15	★ 701
	4454-8
CGA55L12	4454-9
CGA78L14	4454-10
CGA8L48	★ 700
CGA8L48	★ 4740
	4454-1
DAC-08	★ 3664
	2852-14
DAC-08A	★ 3664
	2851-7
DAC-08C	★ 3664
	2854-36
DAC-08E	★ 3664
	2852-28
DAC-08H	★ 3664
	2851-8
DAC-10B	★ 3655
	2858-4
DAC-10C	★ 3655
	2858-5
DAC-10F	★ 3655
	2858-6
DAC-10G	★ 3655
	2858-22
DAC-4565	★ 3662
	2862-34
DAC-4565S	★ 3662
	2832-1
DAC-4888	★ 3656
	2851-16
DAC-4888B	★ 3656
	2851-17
DAC-6012AC	★ 3663
	2868-18
DAC-6012AM	★ 3663
	2868-19
DAC-6012C	★ 3663
	2868-20
DAC-6012M	★ 3663
	2868-21
DAC4888B	2854-12
DAC4888D	2854-11
DAC4888F	2854-13
HA4741-2	3370-48
HA4741-5	3371-48
HA4741-8	3369-27
LH2101A	3363-21
LH2111	3314-6
LM101A	3330-18
LM101A	3346-115
LM111	3312-47
LM124	3334-155
LM139	3316-6
LM148	3371-35
LM224	3334-156
LM239	3316-27
LM248	3372-39
LM2900	3334-193
LM2901	3316-43
LM2902	3334-112
LM301A	3353-29
LM311	3313-18
LM324	3334-157
LM329	3402-157
LM339	3316-28
LM348	3372-40
LM3900	3334-194
LP165	★ 3667
	3315-53
LP365	★ 3667
	3316-37
LP365A	★ 3667
	3315-54
OP-05	★ 3666
	3342-43
OP-05A	★ 3666
	3340-11
OP-05C	★ 3666
	3345-9
OP-05E	★ 3666
	3342-47
OP-07	★ 3666
	3343-37
OP-07A	★ 3666
	3335-34
OP-07C	★ 3666
	3340-17
OP-07D	★ 3666
	3340-21
OP-07E	★ 3666
	3343-38
OP-27A	★ 3666
	3337-19
OP-27B	★ 3666
	3338-14
OP-27C	★ 3666
	3339-38
OP-27E	★ 3666
	3337-20
OP-27F	★ 3666
	3338-15
OP-27G	★ 3666
	3339-39
OP-37A	★ 3666
	3337-2
OP-37B	★ 3666
	3338-30
OP-37C	★ 3666
	3339-17
OP-37E	★ 3666
	3337-3
OP-37F	★ 3666
	3338-31
OP-37G	★ 3666
	3339-18
OP-47B	★ 3666
	3338-29
OP-47F	★ 3666
	3338-28
OP-47G	★ 3666
	3339-49
RC1458	3330-7
RC2041	3363-67
RC2043	3363-69
RC2505	855-136
RC3078	★ 3666
	3350-54
RC3078A	★ 3666
	3350-6
RC3301	3334-188
RC3401	3334-184
RC3403	3334-175
RC3403A	3372-45
RC4136	3372-52
RC4151	★ 3665
	3405-113
	¶ 391-16
RC4152	★ 3665
	3405-114
	¶ 391-16
RC4153	★ 3665
	3405-115
	¶ 391-16
RC4156	3371-44
RC4157	3370-49
RC4191	★ 3658
	3396-43
RC4192	★ 3658
	3396-44
RC4193	★ 3658
	3396-45
	¶ 426-5
RC4194	3395-56
RC4195	3392-87
RC4200	★ 3650
	3401-15
	¶ 422-10
RC4200A	★ 3650
	3401-16
RC4391	★ 3642
	3396-46
	¶ 426-5
RC4444	2829-19
RC4444	3378-3
RC4558	3367-33
RC4559	3367-28
RC4739	3367-29
RC4805	★ 3648
	3312-11
	¶ 414-10
RC4805A	★ 3648
	3312-3
RC5534	3350-46
RC555	3383-43
RC556	3383-84
RC714	★ 3666
	3338-40
RC714C	★ 3666
	3338-41
RC714E	★ 3666
	3338-42
RC723	3393-122
RC725	3346-151
RC741	3330-26
RC741	3355-33
RC747	3367-18
RC8200	881-162
RC8201	881-164
RC8202	882-164
RC8203	882-167
RC8230	879-143
RC8231	879-151
RC8232	879-144
RC8233	878-168
RC8234	878-115
RC8241	874-96
RC8242	874-158
RC8243	888-126
RC8250	862-76
RC8251	862-126
RC8252	862-127
RC8260	855-16
RC8261	854-159
RC8262	889-6
RC8263	879-127
RC8264	879-129
RC8266	878-74
RC8267	879-71
RC8270	881-89
RC8270	3854-42
RC8271	881-96
RC8271	3854-43
RC8273	883-4
RC8273	3856-93
RC8274	883-1
RC8274	3856-90
RC8280	860-111
RC8281	858-89
RC8284	860-50
RC8285	861-69
RC8290	860-112
RC8291	858-90
RC8T09	864-16
RC8T20	880-90
REF-01	★ 3652
	3403-58
REF-01A	★ 3652
	3403-59
REF-01C	★ 3652
	3403-60
REF-01D	★ 3652
	3403-61
REF-01E	★ 3652
	3403-62
REF-01H	★ 3652
	3403-63
REF-02	★ 3653
	3402-128
REF-02A	★ 3653
	3402-129
REF-02C	★ 3653
	3402-130
REF-02D	★ 3653
	3402-131
REF-02E	★ 3653
	3402-132
REF-02H	★ 3653
	3402-133
REF-03	★ 3654
	3402-71
REF-03C	★ 3654
	3402-72
REF-03D	★ 3654
	3402-73
RF9601	880-108
RLA120	★ 3668
RLA120	★ 4741
	4464-42
RM1537	3366-8
RM1558	3366-16
RM2505	855-137
RM3503	3334-176
RM3503A	3370-55
RM4136	3371-57
RM4151	3405-116
RM4152	3405-117
RM4153	3405-118
RM4156	3370-45
RM4157	3370-50
RM4191	3396-47
RM4192	3396-48
RM4193	3396-49
RM4194	3395-57
RM4195	3392-88
RM4391	3396-50
RM4444	2829-20
RM4444	3378-4
RM4558	3365-50
RM4559	3366-7
RM4805	3312-12
RM4805A	3312-4
RM5534	★ 3666
	3346-132
RM555	3383-44
RM556	3383-85
RM723	3393-123
RM741	3353-46
RM747	3366-17
RM8200	881-163
RM8201	881-165
RM8202	882-165
RM8203	882-168
RM8231	879-152
RM8232	879-145
RM8233	878-169
RM8234	878-116
RM8241	874-97
RM8242	874-159
RM8243	888-127
RM8250	862-77
RM8260	855-17
RM8262	889-7
RM8263	879-128
RM8264	879-130
RM8266	878-75
RM8267	879-72
RM8270	881-90
RM8270	3854-44
RM8271	881-97
RM8271	3854-45
RM8273	883-5
RM8273	3856-94
RM8274	883-2
RM8274	3856-91
RM8280	860-113
RM8281	858-91
RM8284	860-51
RM8285	861-70
RM8290	860-114
RM8291	858-92
RM8T09	864-17
RM8T20	880-91
RV4143	3327-138
RV4144	3327-139
XR2207C	3376-29
XR2207M	3376-30
XR2211C	3375-27
XR2211C	3375-151
XR2211C	3381-114
XR2211M	3375-28
XR2211M	3375-152
XR2211M	3381-115

RCA Solid State Division

Device	Page-Line
18S02	¶ 385-4
41051	★ 3216
	2837-26
CA081	★ 3672
CA081	★ 3676
	3357-101
CA081A	★ 3672
CA081A	★ 3676
	3354-45
CA081B	★ 3672
CA081B	★ 3676
	3346-165
CA082	★ 3672
CA082	★ 3676
	3368-34
CA082A	★ 3672
CA082A	★ 3676
	3366-32
CA082B	★ 3672
CA082B	★ 3676
	3363-42
CA083	★ 3672
	3368-58
CA083A	★ 3672
	3367-46

¶ Indicates page number in Application Note Directory.
★ Indicates additional data is provided on the page noted.

RCA Solid State Division (Cont'd)

Device	Page-Line
CA083B	★ **3672**
	3363-71
CA084	★ **3672**
CA084	★ **3676**
	3373-48
CA084A	★ **3672**
CA084A	★ **3676**
	3372-9
CA084B	★ **3672**
CA084B	★ **3676**
	3370-35
CA101	★ **3672**
CA1190	3326-47
CA1191	3326-48
CA124	★ **3672**
	3334-158
CA139	★ **3672**
CA139	★ **3677**
	3316-7
CA1391	3325-125
CA1394	3325-126
CA1398	3324-148
CA139A	★ **3672**
CA139A	★ **3677**
	3315-33
CA1458	★ **3672**
	3330-8
CA1523	3396-51
CA1524	3396-52
	¶ 421-17
CA1524E	¶ 422-4
CA1524E	¶ 422-5
CA1558	★ **3672**
	3366-18
CA158	★ **3672**
	3334-122
	3365-33
CA158A	★ **3672**
	3363-5
CA1724G	★ **3678**
	3310-47
CA1725G	★ **3678**
	3310-48
CA1890	3326-19
CA201	★ **3672**
CA2111A	3322-13
CA224	★ **3672**
	3334-159
CA239	★ **3672**
CA239	★ **3677**
	3316-29
CA239A	★ **3672**
CA239A	★ **3677**
	3315-44
CA2524	3396-53
	¶ 421-17
CA258	★ **3672**
	3334-123
	3365-34
CA258A	★ **3672**
	3363-53
CA270	3327-37
CA2904	3334-113
CA3000	3306-55
CA3001	3308-11
CA3002	3321-133
CA3005	3321-134
CA3005	3323-13
	¶ 415-10
CA3006	3321-135
CA3006	3323-14
CA3010	★ **3672**
	3354-28
CA3010A	★ **3672**
	3346-136
CA3011	3308-12
	¶ 415-10
CA3012	3321-136
	¶ 415-10
CA3013	3322-14
	¶ 415-10
CA3014	3322-15
	¶ 415-10
CA3015	★ **3672**
	3334-215
	3354-40
CA3015A	★ **3672**
	3334-216
	3346-139
CA3018	★ **3678**
	3309-1
	¶ 410-5
CA3018A	★ **3678**
	3309-2
CA3019	★ **3678**
	3311-42
	¶ 410-6
CA301A	★ **3672**
	3356-25
CA3020	3318-43
CA3020A	3308-13
CA3026	★ **3678**
	3309-93
CA3028	3321-137
CA3028A	3306-50
	¶ 409-11
CA3028B	3306-51
	¶ 409-11
CA3029	★ **3672**
	3354-29
CA3029A	★ **3672**
	3346-137
CA3030	★ **3672**
	3334-217
	3354-41
CA3030A	★ **3672**
	3334-218
	3346-140
CA3037	★ **3672**
	3354-30
CA3037A	★ **3672**
	3346-138
CA3038	★ **3672**
	3334-219
	3354-42
CA3038A	★ **3672**
	3334-220
	3346-141
CA3039	★ **3678**
CA3040	3308-14
CA3045	★ **3678**
	3309-19
CA3046	★ **3678**
	3309-20
CA3048	★ **3678**
	3306-1
	¶ 405-14
CA3049	★ **3678**
	3309-96
	3323-15
CA3050	★ **3678**
	3309-98
CA3051	★ **3678**
	3309-99
CA3052	★ **3678**
	3306-2
CA3053	3306-52
CA3054	★ **3678**
	3309-94
CA3058	3405-133
	¶ 402-8
CA3059	3405-134
	¶ 402-8
CA3060	★ **3672**
	3334-51
	3369-10
CA3060A	★ **3672**
	3334-58
CA3060B	★ **3672**
	3334-59
CA3065	3322-16
CA3065	3326-49
CA3068	3327-38
	¶ 417-2
CA307	★ **3672**
	3356-16
CA3070	3324-149
CA3071	3324-150
CA3072	3324-151
CA3075	3322-17
CA3075	3326-50
CA3078	★ **3672**
	3347-18
	3334-33
	3350-55
CA3078A	★ **3672**
	3347-25
	3334-48
CA3079	3405-135
	¶ 402-8
CA3080	★ **3674**
	3318-203
	3341-4
	3351-4
CA3080A	★ **3674**
	3318-204
	3341-5
	3351-5
	¶ 405-12
CA3081	★ **3678**
	3310-167
CA3082	★ **3678**
	3310-164
CA3083	★ **3678**
	3310-58
CA3084	★ **3678**
CA3085	3392-104
	¶ 427-1
CA3085A	3393-63
CA3085B	3394-21
CA3086	★ **3678**
	3309-21
CA3088	3321-32
CA3089	3322-18
	¶ 415-2
CA3090	¶ 405-12
CA3090AQ	¶ 415-11
CA3091	3400-136
CA3094	★ **3674**
CA3094	★ **3677**
	3318-30
	3348-92
	3330-108
	3347-9
	3334-21
	3334-75
	¶ 405-6
	¶ 424-13
CA3094A	★ **3674**
CA3094A	★ **3677**
	3347-10
	3334-22
	3334-80
	3354-7
CA3094B	★ **3674**
CA3094B	★ **3677**
	3347-11
	3334-23
	3334-82
	3354-8
CA3096	★ **3678**
	3310-31
CA3096A	★ **3678**
	3310-32
CA3096C	★ **3678**
	3310-33
CA3097	★ **3678**
	3311-46
CA3099	891-114
CA3099	3398-101
CA3100	★ **3674**
	3354-21
CA3102	★ **3678**
	3309-97
CA3105	3353-5
CA3105M	3353-6
CA311	★ **3672**
CA311	★ **3677**
	3313-19
CA3118	★ **3678**
	3309-3
CA3118A	★ **3678**
	3309-4
CA3120	3326-20
CA3120E	¶ 417-10
CA3121	3324-152
CA3123	3321-33
CA3125	3324-153
CA3126	3324-154
CA3126Q	¶ 417-4
CA3127	★ **3678**
	3310-67
	3322-104
CA3128	3324-155
CA3130	★ **3674**
	3334-93
	3357-111
	¶ 408-11
CA3130A	★ **3674**
	3334-94
	3351-10
	¶ 408-11
CA3130B	¶ 408-11
CA3134	3326-51
	¶ 414-7
CA3136	3327-39
CA3138	★ **3678**
	3310-49
CA3138A	★ **3678**
	3310-50
CA3139	3324-54
CA3140	★ **3674**
CA3140	★ **3676**
	3330-35
	3334-79
	3357-110
CA3140A	★ **3674**
CA3140A	★ **3676**
	3351-12
CA3141	★ **3678**
	3311-44
CA3142	3326-21
CA3142E	¶ 417-10
CA3143	3324-156
	¶ 417-1
	¶ 417-5
CA3144	¶ 417-1
CA3144	¶ 417-5
CA3146	★ **3678**
	3309-22
CA3146A	★ **3678**
	3309-23
CA3151	3324-157
CA3154	3326-22
	¶ 416-16
CA3156	3324-158
CA3157	¶ 416-16
CA3159	3325-127
CA3160	★ **3674**
	3330-36
	3357-109
CA3160A	★ **3674**
	3351-9
CA3161	★ **3219**
	2848-37
CA3162	★ **3218**
	2848-38
CA3163	891-32
CA3163	3376-83
CA3166	3307-61
CA3166	3326-4
CA3168	★ **3219**
	2876-11
CA3169	2895-75
CA3169M	2895-76
CA3170	3324-159
CA3172	3325-1
CA3179	3375-78
CA3179	3376-84
CA3183	★ **3678**
	3310-59
CA3189	3322-19
CA3193	★ **3674**
	3343-14
CA3193A	★ **3674**
	3340-32
CA3193B	★ **3674**
	3338-53
CA3194	3325-2
CA3195	3322-119
CA3199	849-84
CA3199	3375-79
CA3201	3325-3
CA3202	3325-105
CA3207	★ **3219**
	2874-31
CA3208	★ **3219**
	2874-30
CA3209	3322-20
CA3210	3325-128
	¶ 417-8
CA3211	849-91
CA3215	3322-21
CA3216	3327-40
CA3217	3325-4
	¶ 417-13
CA3219	2898-67
CA3223	3325-106
CA3224	3326-7
CA3227	★ **3678**
	3310-68
CA3228	2895-134
CA3228	3319-137
CA3232	849-90
CA3235	3327-41
CA3237	3306-129
CA3237	3323-5
CA3237	3325-141
CA324	★ **3672**
	3334-160
CA3240	★ **3674**
CA3240	★ **3676**
	3334-137
CA3240A	★ **3674**
CA3240A	★ **3676**
	3365-1
CA3242	2896-79
CA3246	★ **3678**
	3310-69
CA3250	3309-44
CA3251	3309-45
CA3252	2896-49
CA3254	3326-100
CA3260	★ **3674**
	3330-37
CA3260AE	★ **3674**
	3363-104
CA3260AT	★ **3674**
	3363-105
CA3260B	★ **3674**
	3362-35
CA3260E	★ **3674**
	3368-32
CA3260T	★ **3674**
	3368-33
CA3280	★ **3674**
	3363-70
CA3290	★ **3674**
CA3290	★ **3676**
	3315-18
CA3290A	★ **3674**
CA3290A	★ **3676**
	3315-13
CA3290B	★ **3674**
CA3290B	★ **3676**
	3314-46
CA330	¶ 387-15
CA3300	★ **3216**
CA3300	★ **3218**
	843-154
	★ **3216**
	★ **3218**
	2832-35
CA3300C	★ **3216**
CA3300C	★ **3218**
	2832-37
CA3304	★ **3216**
	2832-5
CA3306	★ **3216**
	843-155
CA3306C	★ **3216**
	2832-36
CA3307	★ **3216**
	2833-1
CA3308	844-16
CA3308	2833-25
CA3310	★ **3216**
	2839-3
CA3310A	★ **3216**
	2838-32
CA3318	★ **3216**
	2837-25
CA3338	★ **3216**
	2850-17
CA3388	★ **3216**
CA339	★ **3672**
CA339	★ **3677**
	3316-30
CA339A	★ **3672**
CA339A	★ **3677**
	3315-45
CA3401	★ **3674**
	3334-185
CA3410	3373-47
CA3410A	3373-7
CA3420	★ **3674**
	3356-58
CA3420A	★ **3674**
	3351-3
CA3420B	★ **3674**
	3345-24
CA3440	★ **3674**
	3357-7
CA3440A	★ **3674**
	3351-11
CA3440B	★ **3674**
	3345-32
CA3493	★ **3674**
	3343-15
CA3493B	★ **3674**
	3338-54
CA3524	3396-54
	¶ 421-17
CA358	★ **3672**
	3334-133
CA358A	★ **3672**
	3363-62
CA3600	★ **3678**
	3311-39
CA3999	★ **3216**
	2848-55
CA555	3383-45
CA555C	3383-46
CA570	1467-83
CA575	1467-84
CA6078A	★ **3674**
	3347-26
CA6741	★ **3674**
	3353-50
CA723	3393-124
CA723C	3393-125
CA741	★ **3672**
	3330-27
CA741C	★ **3672**
	3355-34
CA747	★ **3672**
	3366-19
CA747C	★ **3672**
	3367-19
CA748	★ **3672**
	3354-4
CA748C	★ **3672**
	3355-40
CA920A	3325-129
CD1878	1452-80
CD22012	3320-97
CD22014	3320-98
CD22100	★ **1147**
CD22100	★ **1152**
	2829-21
	★ **1147**
	★ **1152**
	3378-12
CD22101	★ **1147**
CD22101	★ **1152**
	2829-22
	★ **1147**
	★ **1152**
	3378-15
CD22102	★ **1147**
CD22102	★ **1152**
	2829-23
	★ **1147**
	★ **1152**
	3378-16
CD22103A	★ **1147**
CD22103A	★ **1152**
	3379-96
CD22104	★ **1147**
	819-113
CD22104A	★ **1147**
	819-114
CD22105	★ **1147**
	819-108
CD22105A	★ **1147**
	819-109
CD22202	★ **1151**
	3380-115
CD22204	★ **1151**
	3380-116
CD22223	3380-18
CD22301	★ **1147**
CD22301	★ **1152**
	3380-87
CD22302	★ **1151**
	3377-131
CD22303	★ **1151**
	3377-70
CD22354	★ **1151**
	3377-151
CD22357	★ **1151**
	3377-52
CD22401	★ **1147**
	2874-141
	2875-24
	★ **1147**
	3324-44

Arranged alphanumerically from left to right.

RCA Solid State Division (Cont'd)

Device	Page-Line
CD22402	★ 1147
	3326-120
CD22413A	★ 1147
	3379-75
CD22414A	★ 1147
	3379-76
CD22859	★ 1147
CD22859	★ 1152
	3382-84
CD3226	3327-98
CD4000 Series	¶ 352-15
CD4000 Series	¶ 353-1
CD4000 Series	¶ 353-8
CD4000 Series	¶ 354-1
CD4000 Series	¶ 354-2
CD4000 Series	¶ 354-17
CD4000 Series	¶ 355-10
CD4000 Series	¶ 400-14
CD4000 Series	¶ 423-5
CD4000A	★ 704
CD4000A	★ 1145
	826-181
	¶ 355-6
CD4000A Series	¶ 354-18
CD4000A Series	¶ 355-7
CD4000AE	★ 704
CD4000AE	★ 1145
	826-182
CD4000B	★ 704
CD4000B	★ 1145
	826-183
CD4000B Series	¶ 355-5
CD4000B Series	¶ 355-7
CD4000BE	★ 704
CD4000BE	★ 1145
	826-184
CD4000UB	★ 704
CD4000UB	★ 1145
	826-185
CD4000UB Series	¶ 355-5
CD4000UBE	★ 704
CD4000UBE	★ 1145
	826-186
CD4001	¶ 352-6
CD4001A	★ 704
CD4001A	★ 1145
	827-165
	¶ 355-6
CD4001AE	★ 704
CD4001AE	★ 1145
	827-166
CD4001B	★ 704
CD4001B	★ 1145
	827-167
CD4001BE	★ 704
CD4001BE	★ 1145
	827-168
CD4001UB	★ 704
CD4001UB	★ 1145
	827-169
CD4001UBE	★ 704
CD4001UBE	★ 1145
	827-170
CD4002A	★ 704
CD4002A	★ 1145
	827-42
CD4002AE	★ 704
CD4002AE	★ 1145
	827-43
CD4002B	★ 704
CD4002B	★ 1145
	827-44
CD4002BE	★ 704
CD4002BE	★ 1145
	827-45
CD4002UB	★ 704
CD4002UB	★ 1145
	827-46
CD4002UBE	★ 704
CD4002UBE	★ 1145
	827-47
CD40061	831-121
CD40061A	831-122
CD40061A	3832-85
CD4006A	★ 704
	836-184
CD4006AE	★ 704
	836-185
CD4006B	★ 704
	836-186
CD4006BE	★ 704
	836-187
	★ 704
	3855-56
CD4007A	★ 704
CD4007A	★ 1145
	810-162
	¶ 389-9
CD4007AE	★ 704
CD4007AE	★ 1145
	810-163
CD4007UB	★ 704
CD4007UB	★ 1145
	810-164
CD4007UBE	★ 704
CD4007UBE	★ 1145
	810-165
CD4008	¶ 352-6
CD4008A	★ 704
CD4008A	★ 1147
	806-62
CD4008AE	★ 704
CD4008AE	★ 1147
	806-63
CD4008B	★ 704
CD4008B	★ 1147
	806-64
CD4008BE	★ 704
CD4008BE	★ 1147
	806-65
CD4009	¶ 353-9
CD4009A	★ 704
CD4009A	★ 1145
	808-159
CD4009AE	★ 704
CD4009AE	★ 1145
	808-160
CD4009UB	★ 704
CD4009UB	★ 1145
	808-161
CD4009UBE	★ 704
CD4009UBE	★ 1145
	808-162
CD4010	¶ 353-9
CD40100B	837-5
CD40100BE	837-6
CD40101B	★ 1147
	808-30
CD40101BE	★ 1147
	808-31
CD40102B	★ 1146
	815-92
CD40102BE	★ 1146
	815-93
CD40103B	★ 1146
	812-119
CD40103BE	★ 1146
	812-120
CD40104B	835-70
CD40105B	★ 1146
	831-55
	★ 1146
	3809-1
CD40105BE	★ 1146
	831-56
	★ 1146
	3809-2
CD40106B	★ 704
CD40106B	★ 1145
	839-45
CD40106BE	★ 704
CD40106BE	★ 1145
	839-46
CD40107B	★ 704
CD40107B	★ 1145
	824-109
CD40107BE	★ 704
CD40107BE	★ 1145
	824-110
	¶ 353-6
CD40108B	★ 1146
CD40108B	★ 1147
	831-61
CD40108BE	★ 1146
CD40108BE	★ 1147
	831-62
CD40109B	★ 704
CD40109B	★ 1145
	837-33
CD40109BE	★ 704
CD40109BE	★ 1145
	837-34
CD4010A	★ 704
CD4010A	★ 1145
	809-53
CD4010AE	★ 704
CD4010AE	★ 1145
	809-54
CD4010B	★ 704
CD4010B	★ 1145
	809-55
CD4010BE	★ 704
CD4010BE	★ 1145
	809-56
CD4011	¶ 352-6
CD40110B	★ 1146
	815-116
CD40110BE	★ 1146
	815-117
CD40114B	831-106
CD40114B	3831-121
CD40114BE	831-107
CD40115	★ 1145
	837-45
CD40116	★ 1145
	837-44
CD40117B	★ 1145
	838-55
CD4011A	★ 704
CD4011A	★ 1145
	825-95
CD4011AE	★ 704
CD4011AE	★ 1145
	825-96
CD4011B	★ 704
CD4011B	★ 1145
	825-97
CD4011BE	★ 704
CD4011BE	★ 1145
	825-98
	★ 704
	★ 1145
	3831-122
CD4011UB	★ 704
CD4011UB	★ 1145
	825-99
CD4011UBE	★ 704
CD4011UBE	★ 1145
	825-100
CD4012A	★ 704
CD4012A	★ 1145
	824-152
CD4012AE	★ 704
CD4012AE	★ 1145
	824-153
CD4012B	★ 704
CD4012B	★ 1145
	824-154
CD4012BE	★ 704
CD4012BE	★ 1145
	824-155
CD4012UB	★ 704
CD4012UB	★ 1145
	824-156
CD4012UBE	★ 704
CD4012UBE	★ 1145
	824-157
CD4013	¶ 352-6
CD4013A	★ 704
CD4013A	★ 1146
	820-58
CD4013AE	★ 704
CD4013AE	★ 1146
	820-59
CD4013B	★ 704
CD4013B	★ 1146
	820-60
CD4013BE	★ 704
CD4013BE	★ 1146
	820-61
CD40147B	★ 1145
	842-103
CD40147BE	★ 1145
	842-104
CD4014A	★ 704
	836-128
CD4014AE	★ 704
	836-129
CD4014B	★ 704
	836-130
	★ 704
	3856-29
CD4014BE	★ 704
	836-131
	★ 704
	3856-19
CD4015A	★ 704
	834-166
CD4015AE	★ 704
	834-167
CD4015B	★ 704
	834-168
	★ 704
	3855-39
CD4015BE	★ 704
	834-169
	★ 704
	3855-37
CD40160B	★ 1146
	815-15
CD40160BE	★ 1146
	815-16
CD40161B	★ 1146
	812-26
CD40161BE	★ 1146
	812-27
CD40162B	★ 1146
	814-149
CD40162BE	★ 1146
	814-150
CD40163B	★ 1146
	811-162
CD40163BE	★ 1146
	811-163
CD4016A	★ 704
CD4016A	★ 1147
	2824-53
	¶ 396-14
CD4016AE	★ 704
CD4016AE	★ 1147
	2824-54
CD4016B	★ 704
CD4016B	★ 1147
	2824-55
CD4016BE	★ 704
CD4016BE	★ 1147
	2824-56
CD4017	¶ 356-9
CD40174B	★ 704
CD40174B	★ 1146
	821-37
CD40174BE	★ 704
CD40174BE	★ 1146
	821-38
CD40175B	★ 1146
	820-123
CD40175BE	★ 1146
	820-124
CD4017A	★ 704
CD4017A	★ 1146
	814-96
CD4017AE	★ 704
CD4017AE	★ 1146
	814-97
CD4017B	★ 704
CD4017B	★ 1146
	814-98
CD4017BE	★ 704
CD4017BE	★ 1146
	814-99
CD4018	¶ 356-13
CD40181B	★ 1147
	806-178
CD40181BE	★ 1147
	807-1
CD40182B	★ 1147
	807-20
CD40182BE	★ 1147
	807-21
CD4018A	★ 1146
	816-103
CD4018AE	★ 1146
	816-104
CD4018B	★ 1146
	816-105
CD4018BE	★ 1146
	816-106
CD4019	¶ 352-6
CD40192B	★ 1146
	815-64
CD40192BE	★ 1146
	815-65
CD40193B	★ 1146
	812-100
CD40193BE	★ 1146
	812-101
CD40194B	835-71
CD4019A	★ 704
CD4019A	★ 1145
CD4019A	★ 1147
	826-9
CD4019AE	★ 704
CD4019AE	★ 1145
CD4019AE	★ 1147
	826-10
CD4019B	★ 704
CD4019B	★ 1145
CD4019B	★ 1147
	826-11
CD4019BE	★ 704
CD4019BE	★ 1145
CD4019BE	★ 1147
	826-12
CD40208B	★ 1146
CD40208B	★ 1147
	831-63
CD40208BE	★ 1146
CD40208BE	★ 1147
	831-64
CD4020A	★ 704
CD4020A	★ 1146
	813-188
CD4020AE	★ 704
CD4020AE	★ 1146
	813-189
CD4020B	★ 704
CD4020B	★ 1146
	813-190
CD4020BE	★ 704
CD4020BE	★ 1146
	813-191
CD4021A	★ 704
	835-125
CD4021AE	★ 704
	835-126
CD4021B	★ 704
	835-127
	★ 704
	3856-30
CD4021BE	★ 704
	835-128
	★ 704
	3856-20
CD4022A	★ 704
CD4022A	★ 1146
	816-78
CD4022AE	★ 704
CD4022AE	★ 1146
	816-79
CD4022B	★ 704
CD4022B	★ 1146
	816-80
CD4022BE	★ 704
CD4022BE	★ 1146
	816-81
CD4023A	★ 704
CD4023A	★ 1145
	825-26
CD4023AE	★ 704
CD4023AE	★ 1145
	825-27
CD4023B	★ 704
CD4023B	★ 1145
	825-28
CD4023BE	★ 704
CD4023BE	★ 1145
	825-29
CD4023UB	★ 704
CD4023UB	★ 1145
	825-30
CD4023UBE	★ 704
CD4023UBE	★ 1145
	825-31
CD4024	¶ 356-9
CD4024A	★ 704
CD4024A	★ 1146
	813-59
CD4024AE	★ 704
CD4024AE	★ 1146
	813-60
CD4024B	★ 704
CD4024B	★ 1146
	813-61
CD4024BE	★ 704
CD4024BE	★ 1146
	813-62
CD40257B	★ 704
CD40257B	★ 1147
	832-161
CD40257BE	★ 704
CD40257BE	★ 1147
	832-162
CD4025A	★ 704
CD4025A	★ 1145
	827-95
CD4025AE	★ 704
CD4025AE	★ 1145
	827-96
CD4025B	★ 704
CD4025B	★ 1145
	827-97
CD4025BE	★ 704
CD4025BE	★ 1145
	827-98
CD4025UB	★ 704
CD4025UB	★ 1145
	827-99
CD4025UBE	★ 704
CD4025UBE	★ 1145
	827-100
CD4026	¶ 353-9
CD4026A	★ 1146
	814-42
CD4026AE	★ 1146
	814-43
CD4026B	★ 1146
	814-44
CD4026BE	★ 1146
	814-45
CD4027A	★ 704
CD4027A	★ 1146
	823-42
CD4027AE	★ 704
CD4027AE	★ 1146
	823-43
CD4027B	★ 704
CD4027B	★ 1146
	823-44
CD4027BE	★ 704
CD4027BE	★ 1146
	823-45
CD4028A	★ 704
CD4028A	★ 1145
	817-38
CD4028AE	★ 704
CD4028AE	★ 1145
	817-39
CD4028B	★ 704
CD4028B	★ 1145
	817-40
CD4028BE	★ 704
CD4028BE	★ 1145
	817-41
CD4029A	★ 1146
	816-123
CD4029B	★ 1146
	816-124
CD4029BE	★ 1146
	816-125
CD4030A	★ 704
CD4030A	★ 1145
CD4030A	★ 1147
	828-69
CD4030AE	★ 704
CD4030AE	★ 1145
CD4030AE	★ 1147
	828-70
CD4030B	★ 704
CD4030B	★ 1145
CD4030B	★ 1147
	828-71
CD4030BE	★ 704
CD4030BE	★ 1145
CD4030BE	★ 1147
	828-72
CD4031A	★ 704
	837-16
CD4031AE	★ 704
	837-17

¶ Indicates page number in Application Note Directory.
★ Indicates additional data is provided on the page noted.

RCA Solid State Division (Cont'd)

Device	Page-Line
CD4031B	★ 704
	837-18
	★ 704
	3856-122
CD4031BE	★ 704
	837-19
	★ 704
	3856-120
CD4032A	★ 1147
	806-23
CD4032AE	★ 1147
	806-24
CD4032B	★ 1147
	806-25
CD4032BE	★ 1147
	806-26
CD4033	¶ 353-9
CD4033A	★ 1146
	814-56
CD4033AE	★ 1146
	814-57
CD4033B	★ 1146
	814-58
CD4033BE	★ 1146
	814-59
CD4034A	★ 704
CD4034A	★ 1147
	835-144
CD4034AE	★ 704
CD4034AE	★ 1147
	835-145
CD4034B	★ 704
CD4034B	★ 1147
	835-146
	★ 704
	★ 1147
	3855-103
CD4034BE	★ 704
CD4034BE	★ 1147
	835-147
CD4035A	835-72
CD4035AE	835-73
CD4035B	835-74
CD4035B	3855-18
CD4035BE	835-75
CD4035BE	3855-8
CD4036A	831-76
CD4036A	3830-110
CD4036AE	831-77
CD4037A	★ 1145
	826-1
CD4037AE	★ 1145
	826-2
CD4038A	★ 1147
	806-12
CD4038AE	★ 1147
	806-13
CD4038B	★ 1147
	806-14
CD4038BE	★ 1147
	806-15
CD4039A	831-81
CD4039A	3830-107
CD4039AE	831-82
CD4040A	★ 1146
	813-147
CD4040AE	★ 1146
	813-148
CD4040B	★ 1146
	813-149
CD4040BE	★ 1146
	813-150
CD4041A	★ 704
CD4041A	★ 1145
	808-112
CD4041AE	★ 704
CD4041AE	★ 1145
	808-113
CD4041UB	★ 704
CD4041UB	★ 1145
	808-114
CD4041UBE	★ 704
CD4041UBE	★ 1145
	808-115
CD4042A	★ 1146
	829-40
CD4042AE	★ 1146
	829-41
CD4042B	★ 1146
	829-42
CD4042BE	★ 1146
	829-43
CD4043A	★ 704
CD4043A	★ 1146
	829-77
CD4043AE	★ 704
CD4043AE	★ 1146
	829-78
CD4043B	★ 704
CD4043B	★ 1146
	829-79
CD4043BE	★ 704
CD4043BE	★ 1146
	829-80
CD4044A	★ 1146
	829-60
CD4044AE	★ 1146
	829-61
CD4044B	★ 1146
	829-62
CD4045A	★ 1146
	834-124
CD4045AE	★ 1146
	834-125
CD4045B	★ 1146
	834-126
CD4045BE	★ 1146
	834-127
CD4046A	★ 1147
	837-118
	¶ 423-11
	★ 1147
	3375-52
CD4046AE	★ 1147
	837-119
	★ 1147
	3375-53
CD4046B	★ 1147
	837-120
	★ 1147
	3375-54
CD4046BE	★ 1147
	837-121
	★ 1147
	3375-55
CD4047	¶ 355-16
CD4047A	★ 1145
	833-172
CD4047AE	★ 1145
	833-173
CD4047B	★ 1145
	833-174
CD4047BE	★ 1145
	833-175
CD4048A	★ 704
CD4048A	★ 1145
	828-141
CD4048AE	★ 704
CD4048AE	★ 1145
	828-142
CD4048B	★ 704
CD4048B	★ 1145
	828-143
CD4048BE	★ 704
CD4048BE	★ 1145
	828-144
CD4049A	★ 704
CD4049A	★ 1145
	809-38
CD4049AE	★ 704
CD4049AE	★ 1145
	809-39
CD4049UB	★ 704
CD4049UB	★ 1145
	809-40
CD4049UBE	★ 704
CD4049UBE	★ 1145
	809-41
CD4050A	★ 704
CD4050A	★ 1145
	809-83
CD4050AE	★ 704
CD4050AE	★ 1145
	809-84
CD4050B	★ 704
CD4050B	★ 1145
	809-85
CD4050BE	★ 704
CD4050BE	★ 1145
	809-86
CD4051B	★ 1147
	2830-122
CD4051BE	★ 1147
	2830-123
CD4052B	★ 1147
	2830-23
CD4052BE	★ 1147
	2830-24
CD4053B	★ 1147
	2826-51
CD4053BE	★ 1147
	2826-52
CD4054B	★ 1147
	819-116
	★ 1147
	2876-100
CD4054BE	★ 1147
	819-117
CD4055B	★ 1147
	819-74
	★ 1147
	2875-144
CD4055BE	★ 1147
	819-75
	★ 1147
	2875-145
CD4056B	★ 1147
	819-79
	★ 1147
	2876-6
CD4056BE	★ 1147
	819-80
	★ 1147
	2876-7
CD4057A	★ 1147
	807-2
CD4059	¶ 423-1
CD4059A	★ 1146
	816-59
	¶ 356-8
CD4059AE	★ 1146
	816-60
CD4060A	★ 1146
	814-30
CD4060AE	★ 1146
	814-31
CD4060B	★ 1146
	814-32
	¶ 419-18
CD4060BE	★ 1146
	814-33
CD4061A	¶ 440-1
CD4063B	★ 1147
	807-59
CD4063BE	★ 1147
	807-60
CD4066A	★ 704
CD4066A	★ 1147
	2824-14
CD4066AE	★ 704
CD4066AE	★ 1147
	2824-15
CD4066B	★ 704
CD4066B	★ 1147
	2824-16
CD4066BE	★ 704
CD4066BE	★ 1147
	2824-17
CD4067B	★ 704
CD4067B	★ 1147
	2831-60
CD4067BE	★ 704
CD4067BE	★ 1147
	2831-61
CD4068B	★ 1145
	825-175
CD4068BE	★ 1145
	825-176
CD4069UB	★ 704
CD4069UB	★ 1145
	811-63
CD4069UBE	★ 704
CD4069UBE	★ 1145
	811-64
CD4070B	★ 704
CD4070B	★ 1145
CD4070B	★ 1147
	828-73
CD4070BE	★ 704
CD4070BE	★ 1145
CD4070BE	★ 1147
	828-74
CD4071B	★ 704
CD4071B	★ 1145
	826-163
CD4071BE	★ 704
CD4071BE	★ 1145
	826-164
CD4072B	★ 704
CD4072B	★ 1145
	826-77
CD4072BE	★ 704
CD4072BE	★ 1145
	826-78
CD4073B	★ 704
CD4073B	★ 1145
	824-33
CD4073BE	★ 704
CD4073BE	★ 1145
	824-34
CD4075B	★ 704
CD4075B	★ 1145
	826-114
CD4075BE	★ 704
CD4075BE	★ 1145
	826-115
CD4076B	★ 704
CD4076B	★ 1146
	820-165
CD4076BE	★ 704
CD4076BE	★ 1146
	820-166
CD4077B	★ 704
CD4077B	★ 1145
CD4077B	★ 1147
	828-120
CD4077BE	★ 704
CD4077BE	★ 1145
CD4077BE	★ 1147
	828-121
CD4078B	★ 1145
	828-6
CD4078BE	★ 1145
	828-7
CD4081B	★ 704
CD4081B	★ 1145
	824-90
CD4081BE	★ 704
CD4081BE	★ 1145
	824-91
CD4082B	★ 704
CD4082B	★ 1145
	823-182
CD4082BE	★ 704
CD4082BE	★ 1145
	823-183
CD4085B	★ 704
CD4085B	★ 1145
	826-33
CD4085BE	★ 704
CD4085BE	★ 1145
	826-34
CD4086B	★ 704
CD4086B	★ 1145
	826-60
CD4086BE	★ 704
CD4086BE	★ 1145
	826-61
CD4089	¶ 352-7
CD4089B	★ 1147
	838-30
CD4089BE	★ 1147
	838-31
CD4093B	★ 704
CD4093B	★ 1145
	838-169
	¶ 353-5
CD4093BE	★ 704
CD4093BE	★ 1145
	838-170
CD4094B	835-167
CD4094B	3856-79
CD4094BE	835-168
CD4094BE	3856-80
CD4095B	★ 704
CD4095B	★ 1146
	822-164
CD4095BE	★ 704
CD4095BE	★ 1146
	822-165
CD4096B	★ 704
CD4096B	★ 1146
	822-166
CD4096BE	★ 704
CD4096BE	★ 1146
	822-167
CD4097B	★ 704
CD4097B	★ 1147
	2831-2
CD4097BE	★ 704
CD4097BE	★ 1147
	2831-3
CD4098B	★ 704
CD4098B	★ 1145
	834-89
CD4098BE	★ 704
CD4098BE	★ 1145
	834-90
CD4099B	★ 704
CD4099B	★ 1146
	831-19
CD4099BE	★ 704
CD4099BE	★ 1146
	831-20
CD4502B	★ 704
CD4502B	★ 1145
	809-9
CD4502BE	★ 704
CD4502BE	★ 1145
	809-10
CD4503BD	★ 1145
	809-174
CD4503BE	★ 1145
	809-175
CD4508B	★ 704
CD4508B	★ 1146
	829-7
CD4508BE	★ 704
CD4508BE	★ 1146
	829-8
CD4510B	★ 1146
	815-66
CD4510BE	★ 1146
	815-67
CD4511B	★ 1147
	819-159
	★ 1147
	2875-158
CD4511BE	★ 1147
	819-160
	★ 1147
	2875-159
CD4512B	★ 1147
	833-64
CD4512BE	★ 1147
	833-65
CD4514B	★ 704
CD4514B	★ 1145
	818-190
CD4514BE	★ 704
CD4514BE	★ 1145
	818-191
CD4515B	★ 704
CD4515B	★ 1145
	818-192
CD4515BE	★ 704
CD4515BE	★ 1145
	818-193
CD4516B	★ 1146
	812-102
CD4516BE	★ 1146
	812-103
CD4517B	835-14
CD4517BE	835-15
CD4517BE	3857-9
CD4517BE	3857-12
CD4518	¶ 356-9
CD4518B	★ 1146
	815-190
CD4518BE	★ 1146
	815-191
CD4520B	★ 1146
	812-162
	¶ 355-17
CD4520BE	★ 1146
	812-163
CD4527	¶ 352-7
CD4527B	★ 1147
	838-39
CD4527BE	★ 1147
	838-40
CD4532B	★ 704
CD4532B	★ 1145
	842-76
CD4532BE	★ 704
CD4532BE	★ 1145
	842-77
CD4536B	★ 1146
	834-114
CD4536BE	★ 1146
	834-115
CD4538B	★ 1145
	834-62
CD4538BE	★ 1145
	834-63
CD4541B	★ 1146
	834-109
CD4541BE	★ 1146
	834-110
CD4543BD	★ 1147
	2875-170
CD4543BE	★ 1147
	2875-171
CD4555B	★ 704
CD4555B	★ 1145
CD4555B	★ 1147
	817-62
CD4555BE	★ 704
CD4555BE	★ 1145
CD4555BE	★ 1147
	817-63
CD4556B	★ 704
CD4556B	★ 1145
CD4556B	★ 1147
	817-76
CD4556BE	★ 704
CD4556BE	★ 1145
CD4556BE	★ 1147
	817-77
CD4585B	★ 1147
	807-61
CD4585BE	★ 1147
	807-62
CD4724B	★ 1146
	831-21
CD4724BE	★ 1146
	831-22
CD54HC00	★ 1149
	825-58
CD54HC02	★ 1149
	827-130
CD54HC03	★ 1149
	825-120
CD54HC04	★ 1149
	811-10
CD54HC08	★ 1149
	824-62
CD54HC10	★ 1149
	824-190
CD54HC107	★ 1149
	823-126
CD54HC109	★ 1149
	823-6
CD54HC11	★ 1149
	824-10
CD54HC112	★ 1149
	823-81
CD54HC123	★ 1150
	834-75
CD54HC125	★ 1149
	808-131
CD54HC126	★ 1149
	808-83
CD54HC132	★ 1149
	838-150
CD54HC137	★ 1150
	818-110
CD54HC138	★ 1150
	818-17
CD54HC139	★ 1150
	817-113
CD54HC14	★ 1149
	839-22
CD54HC147	★ 1150
	819-46
CD54HC151	★ 1150
	833-38
CD54HC153	★ 1150
	832-22
CD54HC154	★ 1150
	819-27
CD54HC157	★ 1150
	832-71
CD54HC158	★ 1150
	832-107

Arranged alphanumerically from left to right.

ADVERTISERS' PRODUCT INDEX

RCA Solid State Division (Cont'd)

Device	Page-Line
CD54HC160	★ 1150 814-175
CD54HC161	★ 1150 811-185
CD54HC162	★ 1150 814-125
CD54HC163	★ 1150 811-131
CD54HC164	★ 1149 836-44
CD54HC165	★ 1149 836-2
CD54HC166	★ 1149 836-76
CD54HC173	★ 1149 820-143
CD54HC174	★ 1149 821-9
CD54HC175	★ 1149 820-98
CD54HC181	★ 1150 806-164
CD54HC182	★ 1150 806-87
CD54HC190	★ 1150 815-132
CD54HC191	★ 1150 812-60
CD54HC192	★ 1150 815-38
CD54HC193	★ 1150 812-61
CD54HC194	★ 1149 835-35
CD54HC195	★ 1149 835-100
CD54HC20	★ 1149 824-127
CD54HC21	★ 1149 823-164
CD54HC221	★ 1150 834-26
CD54HC237	★ 1150 818-111
CD54HC238	★ 1150 818-18
CD54HC240	★ 1149 839-82
CD54HC241	★ 1149 839-156
CD54HC242	★ 1149 838-90
CD54HC243	★ 1149 838-123
CD54HC244	★ 1149 840-77
CD54HC245	★ 1149 841-130
CD54HC251	★ 1150 833-113
CD54HC253	★ 1150 832-41
CD54HC257	★ 1150 832-143
CD54HC258	★ 1150 832-171
CD54HC259	★ 1150 830-181
CD54HC266	828-99
CD54HC27	★ 1149 827-67
CD54HC273	★ 1149 821-68
CD54HC280	★ 1150 808-41
CD54HC283	★ 1150 806-45
CD54HC297	★ 1150 3375-14
CD54HC299	★ 1149 836-156
CD54HC30	★ 1149 825-156
CD54HC32	★ 1149 826-138
CD54HC354	★ 1150 833-114
CD54HC356	★ 1150 833-115
CD54HC365	★ 1149 809-132
CD54HC366	★ 1149 810-6
CD54HC367	★ 1149 809-133
CD54HC368	★ 1149 810-7
CD54HC373	★ 1150 829-134
CD54HC374	★ 1149 822-74
CD54HC377	★ 1149 821-109
CD54HC384	807-89
CD54HC390	★ 1150 815-152
CD54HC393	★ 1150 812-180
CD54HC4002	★ 1149 827-15
CD54HC40102	★ 1150 815-86
CD54HC40103	★ 1150 813-72
CD54HC40104	★ 1149 835-57
CD54HC40105	★ 1149 831-47
CD54HC4015	★ 1149 834-152
CD54HC4016	★ 1149 2824-57
CD54HC4017	★ 1150 814-77
CD54HC4020	★ 1150 813-171
CD54HC4024	★ 1150 813-40
CD54HC4040	★ 1150 813-129
CD54HC4046	★ 1150 837-106
CD54HC4049	809-26
CD54HC4050	809-70
CD54HC4051	★ 1150 2830-124
CD54HC4052	★ 1150 2830-25
CD54HC4053	★ 1150 2826-53
CD54HC4059	★ 1150 816-53
CD54HC4060	★ 1150 814-17
CD54HC4066	★ 1149
CD54HC4067	★ 1150 2831-62
CD54HC4075	★ 1149 826-93
CD54HC4094	★ 1149 835-158
CD54HC42	★ 1150 817-16
CD54HC423	★ 1150 834-27
CD54HC4316	★ 1149 2827-97
CD54HC4351	★ 1150 2830-125
CD54HC4352	★ 1150 2830-26
CD54HC4353	★ 1150 2826-54
CD54HC4510	★ 1150 815-120
CD54HC4511	★ 1150 819-137
CD54HC4514	★ 1150 818-163
CD54HC4515	★ 1150 818-164
CD54HC4516	★ 1150 812-62
CD54HC4518	★ 1150 815-173
CD54HC4520	★ 1150 812-136
CD54HC4538	★ 1150 834-28
CD54HC4543	★ 1150 819-87
CD54HC533	★ 1150 830-60
CD54HC534	★ 1149 821-160
CD54HC540	★ 1149 810-62
CD54HC541	★ 1149 810-63
CD54HC563	★ 1150 830-61
CD54HC564	★ 1149 821-161
CD54HC573	★ 1150 829-135
CD54HC574	★ 1149 822-75
CD54HC583	★ 1150 806-1
CD54HC597	★ 1149 836-24
CD54HC640	★ 1149 841-69
CD54HC643	★ 1149 841-190
CD54HC646	★ 1149 840-163
CD54HC648	★ 1149 840-117
CD54HC670	★ 1149 831-67
CD54HC688	★ 1150 806-108
CD54HC7046	★ 1150 834-146
CD54HC7266	828-100
CD54HC73	★ 1149 823-127
CD54HC74	★ 1149 820-27
CD54HC75	★ 1150 830-146
CD54HC85	★ 1150 807-40
CD54HC86	★ 1149 828-37
CD54HC93	★ 1150 813-3
CD54HCT00	★ 1149 825-76
CD54HCT02	★ 1149 827-146
CD54HCT03	★ 1149 825-124
CD54HCT04	★ 1149 811-43
CD54HCT08	★ 1149 824-76
CD54HCT10	★ 1149 825-9
CD54HCT107	★ 1149 823-145
CD54HCT109	★ 1149 823-26
CD54HCT11	★ 1149 824-21
CD54HCT112	★ 1149 823-93
CD54HCT123	★ 1150 834-80
CD54HCT125	★ 1149 808-137
CD54HCT126	★ 1149 808-98
CD54HCT132	★ 1149 838-158
CD54HCT137	★ 1150 818-134
CD54HCT138	★ 1150 818-53
CD54HCT139	★ 1150 817-141
CD54HCT14	★ 1149 839-33
CD54HCT147	★ 1150 819-54
CD54HCT151	★ 1150 833-48
CD54HCT153	★ 1150 832-28
CD54HCT154	★ 1150 819-35
CD54HCT157	★ 1150 832-87
CD54HCT158	★ 1150 832-122
CD54HCT160	★ 1150 815-3
CD54HCT161	★ 1150 812-10
CD54HCT162	★ 1150 814-137
CD54HCT163	★ 1150 811-147
CD54HCT164	★ 1149 836-58
CD54HCT165	★ 1149 836-14
CD54HCT166	★ 1149 836-88
CD54HCT173	★ 1149 820-154
CD54HCT174	★ 1149 821-24
CD54HCT175	★ 1149 820-111
CD54HCT181	★ 1150 806-173
CD54HCT182	★ 1150 806-92
CD54HCT190	★ 1150 815-139
CD54HCT191	★ 1150 812-80
CD54HCT192	★ 1150 815-49
CD54HCT193	★ 1150 812-81
CD54HCT194	★ 1149 835-45
CD54HCT195	★ 1149 835-110
CD54HCT20	★ 1149 824-138
CD54HCT21	★ 1149 823-172
CD54HCT221	★ 1150 834-44
CD54HCT237	★ 1150 818-135
CD54HCT238	★ 1150 818-19
CD54HCT240	★ 1149 839-110
CD54HCT241	★ 1149 840-6
CD54HCT242	★ 1149 838-106
CD54HCT243	838-130
CD54HCT244	★ 1149 840-7
CD54HCT245	★ 1149 841-165
CD54HCT251	★ 1150 833-136
CD54HCT253	★ 1150 832-49
CD54HCT257	★ 1150 832-154
CD54HCT258	★ 1150 832-179
CD54HCT259	★ 1150 831-2
CD54HCT27	★ 1149 827-79
CD54HCT273	★ 1149 821-83
CD54HCT280	★ 1150 808-47
CD54HCT283	★ 1150 806-53
CD54HCT297	★ 1150 3375-15
CD54HCT299	★ 1149 836-165
CD54HCT30	★ 1149 825-167
CD54HCT32	★ 1149 826-150
CD54HCT354	★ 1150 833-137
CD54HCT356	★ 1150 833-138
CD54HCT365	★ 1149 809-152
CD54HCT366	★ 1149 810-23
CD54HCT367	★ 1149 809-153
CD54HCT368	★ 1149 810-24
CD54HCT373	★ 1150 829-181
CD54HCT374	★ 1149 822-122
CD54HCT377	★ 1149 821-119
CD54HCT384	843-44
CD54HCT390	★ 1150 815-159
CD54HCT393	★ 1150 812-188
CD54HCT4002	★ 1149 827-26
CD54HCT40102	★ 1150 815-89
CD54HCT40103	★ 1150 813-75
CD54HCT40104	★ 1149 835-60
CD54HCT40105	★ 1149 831-50
CD54HCT4015	★ 1149 834-155
CD54HCT4016	★ 1149 2824-58
CD54HCT4017	★ 1150 814-85
CD54HCT4020	★ 1150 813-179
CD54HCT4024	★ 1150 813-48
CD54HCT4040	★ 1150 813-137
CD54HCT4046	★ 1150 837-109
CD54HCT4051	★ 1150 2830-126
CD54HCT4052	★ 1150 2830-27
CD54HCT4053	★ 1150 2826-55
CD54HCT4059	★ 1150 816-56
CD54HCT4060	★ 1150 814-24
CD54HCT4066	★ 1149
CD54HCT4067	★ 1150 2831-63
CD54HCT4075	★ 1149 826-103
CD54HCT4094	★ 1149 835-162
CD54HCT42	★ 1150 817-28
CD54HCT423	★ 1150 834-45
CD54HCT4316	★ 1149 2824-59
CD54HCT4351	★ 1150 2830-127
CD54HCT4352	★ 1150 2830-28
CD54HCT4353	★ 1150 2826-56
CD54HCT4510	★ 1150 815-123
CD54HCT4511	★ 1150 819-144
CD54HCT4514	★ 1150 818-171
CD54HCT4515	★ 1150 818-172
CD54HCT4516	★ 1150 812-82
CD54HCT4518	★ 1150 815-179
CD54HCT4520	★ 1150 812-139
CD54HCT4538	★ 1150 834-46
CD54HCT4543	★ 1150 819-93
CD54HCT533	★ 1150 830-100
CD54HCT534	★ 1149 822-3
CD54HCT540	★ 1149 810-107
CD54HCT541	★ 1149 810-108
CD54HCT563	★ 1150 830-101
CD54HCT564	★ 1149 822-4
CD54HCT573	★ 1150 829-182
CD54HCT574	★ 1149 822-123
CD54HCT583	★ 1150 806-4
CD54HCT597	★ 1149 836-29
CD54HCT640	★ 1149 841-88
CD54HCT643	★ 1149 842-9
CD54HCT646	★ 1149 840-181
CD54HCT648	★ 1149 840-134
CD54HCT670	★ 1149 831-71
CD54HCT688	★ 1150 806-115
CD54HCT7046	★ 1150 834-148
CD54HCT7266	828-112
CD54HCT73	★ 1149 823-146
CD54HCT74	★ 1149 820-42
CD54HCT75	★ 1150 830-157
CD54HCT85	★ 1150 807-51
CD54HCT86	★ 1149 828-51
CD54HCT93	★ 1150 813-7
CD54HCU04	811-11
CD74HC00	★ 1149 825-59
CD74HC02	★ 1149 827-131
CD74HC03	★ 1149 825-121
CD74HC04	★ 1149 811-12
CD74HC08	★ 1149 824-63
CD74HC10	★ 1149 824-191
CD74HC107	★ 1149 823-128
CD74HC109	★ 1149 823-7
CD74HC11	★ 1149 824-11
CD74HC112	★ 1149 823-82
CD74HC123	★ 1150 834-76
CD74HC125	★ 1149 808-132
CD74HC126	★ 1149 808-84
CD74HC132	★ 1149 838-151
CD74HC137	★ 1150 818-112
CD74HC138	★ 1150 818-20
CD74HC139	★ 1150 817-114
CD74HC14	★ 1149 839-23
CD74HC147	★ 1150 819-47
CD74HC151	★ 1150 833-39
CD74HC153	★ 1150 832-23
CD74HC154	★ 1150 819-28
CD74HC157	★ 1150 832-72

¶ Indicates page number in Application Note Directory.
★ Indicates additional data is provided on the page noted.

RCA Solid State Division (Cont'd)

Device	Page-Line
CD74HC158	★ 1150 832-108
CD74HC160	★ 1150 814-176
CD74HC161	★ 1150 811-186
CD74HC162	★ 1150 814-126
CD74HC163	★ 1150 811-132
CD74HC164	★ 1149 836-45
CD74HC165	★ 1149 836-3
CD74HC166	★ 1149 836-77
CD74HC173	★ 1149 820-144
CD74HC174	★ 1149 821-10
CD74HC175	★ 1149 820-99
CD74HC181	★ 1150 806-165
CD74HC182	★ 1150 806-88
CD74HC190	★ 1150 815-133
CD74HC191	★ 1150 812-63
CD74HC192	★ 1150 815-39
CD74HC193	★ 1150 812-64
CD74HC194	★ 1149 835-36
CD74HC195	★ 1149 835-101
CD74HC20	★ 1149 824-128
CD74HC21	★ 1149 823-165
CD74HC221	★ 1150 834-29
CD74HC237	★ 1150 818-113
CD74HC238	★ 1150 818-21
CD74HC240	★ 1149 839-83
CD74HC241	★ 1149 839-157
CD74HC242	★ 1149 838-91
CD74HC243	★ 1149 838-124
CD74HC244	★ 1149 840-78
CD74HC245	★ 1149 841-131
CD74HC251	★ 1150 833-116
CD74HC253	★ 1150 832-42
CD74HC257	★ 1150 832-144
CD74HC258	★ 1150 832-172
CD74HC259	★ 1150 830-182
CD74HC266	828-101
CD74HC27	★ 1149 827-68
CD74HC273	★ 1149 821-69
CD74HC280	★ 1150 808-42
CD74HC283	★ 1150 806-46
CD74HC297	★ 1150 3375-16
CD74HC299	★ 1149 836-157
CD74HC30	★ 1149 825-157
CD74HC32	★ 1149 826-139
CD74HC354	★ 1150 833-117
CD74HC356	★ 1150 833-118
CD74HC365	★ 1149 809-134
CD74HC366	★ 1149 810-8
CD74HC367	★ 1149 809-135
CD74HC368	★ 1149 810-9
CD74HC373	★ 1150 829-136
CD74HC374	★ 1149 822-76
CD74HC377	★ 1149 821-110
CD74HC384	807-90
CD74HC390	★ 1150 815-153
CD74HC393	★ 1150 812-181
CD74HC4002	★ 1149 827-16
CD74HC40102	★ 1150 815-87
CD74HC40103	★ 1150 813-73
CD74HC40104	★ 1149 835-58
CD74HC40105	★ 1149 831-48
CD74HC4015	★ 1149 834-153
CD74HC4016	★ 1149 2824-60
CD74HC4017	★ 1150 814-78
CD74HC4020	★ 1150 813-172
CD74HC4024	★ 1150 813-41
CD74HC4040	★ 1150 813-130
CD74HC4046	★ 1150 837-107
CD74HC4049	★ 1149 809-27
CD74HC4050	★ 1149 809-71
CD74HC4051	★ 1150 2830-128
CD74HC4052	★ 1150 2830-29
CD74HC4053	★ 1150 2826-57
CD74HC4059	★ 1150 816-54
CD74HC4060	★ 1150 814-18
CD74HC4066	★ 1149 2824-18
CD74HC4067	★ 1150 2831-64
CD74HC4075	★ 1149 826-94
CD74HC4094	★ 1149 835-159
CD74HC42	★ 1150 817-17
CD74HC423	★ 1150 834-30
CD74HC4316	★ 1149 2824-61
CD74HC4351	★ 1150 2830-129
CD74HC4352	★ 1150 2830-30
CD74HC4353	★ 1150 2826-58
CD74HC4510	★ 1150 815-121
CD74HC4511	★ 1150 819-138
CD74HC4514	★ 1150 818-165
CD74HC4515	★ 1150 818-166
CD74HC4516	★ 1150 812-65
CD74HC4518	★ 1150 815-174
CD74HC4520	★ 1150 812-137
CD74HC4538	★ 1150 834-31
CD74HC4543	★ 1150 819-88
CD74HC533	★ 1150 830-62
CD74HC534	★ 1149 821-162
CD74HC540	★ 1149 810-64
CD74HC541	★ 1149 810-65
CD74HC563	★ 1150 830-63
CD74HC564	★ 1149 821-163
CD74HC573	★ 1150 829-137
CD74HC574	★ 1149 822-77
CD74HC583	★ 1150 806-2
CD74HC597	★ 1149 836-25
CD74HC640	★ 1149 841-70
CD74HC643	★ 1149 841-191
CD74HC646	★ 1149 840-164
CD74HC648	★ 1149 840-118
CD74HC670	★ 1149 831-68
CD74HC688	★ 1150 806-109
CD74HC7046	★ 1150 834-147
CD74HC7266	★ 1149 828-102
CD74HC73	★ 1149 823-129
CD74HC74	★ 1149 820-28
CD74HC75	★ 1150 830-147
CD74HC85	★ 1150 807-41
CD74HC86	★ 1149 828-38
CD74HC93	★ 1150 813-4
CD74HCT00	★ 1149 825-77
CD74HCT02	★ 1149 827-147
CD74HCT03	★ 1149 825-125
CD74HCT04	★ 1149 811-44
CD74HCT08	★ 1149 824-77
CD74HCT10	★ 1149 825-10
CD74HCT107	823-147
CD74HCT109	823-27
CD74HCT11	★ 1149 824-22
CD74HCT112	823-94
CD74HCT123	★ 1150 834-81
CD74HCT125	★ 1149 808-138
CD74HCT126	★ 1149 808-99
CD74HCT132	★ 1149 838-159
CD74HCT137	★ 1150 818-136
CD74HCT138	★ 1150 818-54
CD74HCT139	★ 1150 817-142
CD74HCT14	★ 1149 839-34
CD74HCT147	★ 1150 819-55
CD74HCT151	★ 1150 833-49
CD74HCT153	★ 1150 832-29
CD74HCT154	★ 1150 819-36
CD74HCT157	★ 1150 832-88
CD74HCT158	★ 1150 832-123
CD74HCT160	★ 1150 815-4
CD74HCT161	★ 1150 812-11
CD74HCT162	★ 1150 814-138
CD74HCT163	★ 1150 811-148
CD74HCT164	836-59
CD74HCT165	836-15
CD74HCT166	★ 1149 836-89
CD74HCT173	820-155
CD74HCT174	821-25
CD74HCT175	820-112
CD74HCT181	★ 1150 806-174
CD74HCT182	★ 1150 806-93
CD74HCT190	★ 1150 815-140
CD74HCT191	★ 1150 812-83
CD74HCT192	★ 1150 815-50
CD74HCT193	★ 1150 812-84
CD74HCT194	★ 1149 835-46
CD74HCT195	★ 1149 835-111
CD74HCT20	★ 1149 824-139
CD74HCT21	★ 1149 823-173
CD74HCT221	★ 1150 834-47
CD74HCT237	★ 1150 818-137
CD74HCT238	★ 1150 818-22
CD74HCT240	★ 1149 839-111
CD74HCT241	★ 1149 840-8
CD74HCT242	★ 1149 838-107
CD74HCT243	838-131
CD74HCT244	★ 1149 840-9
CD74HCT245	★ 1149 841-166
CD74HCT251	★ 1150 833-139
CD74HCT253	★ 1150 832-50
CD74HCT257	★ 1150 832-155
CD74HCT258	★ 1150 832-180
CD74HCT259	★ 1150 831-3
CD74HCT27	★ 1149 827-80
CD74HCT273	821-84
CD74HCT280	★ 1150 808-48
CD74HCT283	★ 1150 806-54
CD74HCT297	★ 1150 3375-17
CD74HCT299	★ 1149 836-166
CD74HCT30	★ 1149 825-168
CD74HCT32	★ 1149 826-151
CD74HCT354	★ 1150 833-140
CD74HCT356	★ 1150 833-141
CD74HCT365	★ 1149 809-154
CD74HCT366	★ 1149 810-25
CD74HCT367	★ 1149 809-155
CD74HCT368	★ 1149 810-26
CD74HCT373	★ 1150 829-183
CD74HCT374	822-124
CD74HCT377	821-120
CD74HCT384	843-45
CD74HCT390	★ 1150 815-160
CD74HCT393	★ 1150 812-189
CD74HCT4002	★ 1149 827-27
CD74HCT40102	★ 1150 815-90
CD74HCT40103	★ 1150 813-76
CD74HCT40104	★ 1149 835-61
CD74HCT40105	★ 1149 831-51
CD74HCT4015	★ 1149 834-156
CD74HCT4016	★ 1149 2824-62
CD74HCT4017	★ 1150 814-86
CD74HCT4020	★ 1150 813-180
CD74HCT4024	★ 1150 813-49
CD74HCT4040	★ 1150 813-138
CD74HCT4046	★ 1150 837-110
CD74HCT4051	★ 1150 2830-130
CD74HCT4052	★ 1150 2830-31
CD74HCT4053	★ 1150 2826-59
CD74HCT4059	★ 1150 816-57
CD74HCT4060	★ 1150 814-25
CD74HCT4066	★ 1149
CD74HCT4067	★ 1150 2831-65
CD74HCT4075	★ 1149 826-104
CD74HCT4094	★ 1149 835-163
CD74HCT42	★ 1150 817-29
CD74HCT423	★ 1150 834-48
CD74HCT4316	★ 1149 2824-63
CD74HCT4351	★ 1150 2830-131
CD74HCT4352	★ 1150 2830-32
CD74HCT4353	★ 1150 2826-60
CD74HCT4510	★ 1150 815-124
CD74HCT4511	★ 1150 819-145
CD74HCT4514	★ 1150 818-173
CD74HCT4515	★ 1150 818-174
CD74HCT4516	★ 1150 812-85
CD74HCT4518	★ 1150 815-180
CD74HCT4520	★ 1150 812-140
CD74HCT4538	★ 1150 834-49
CD74HCT4543	★ 1150 819-94
CD74HCT533	★ 1150 830-102
CD74HCT534	822-5
CD74HCT540	★ 1149 810-109
CD74HCT541	★ 1149 810-110
CD74HCT563	★ 1150 830-103
CD74HCT564	822-6
CD74HCT573	★ 1150 829-184
CD74HCT574	822-125
CD74HCT583	★ 1150 806-5
CD74HCT597	★ 1149 836-30
CD74HCT640	★ 1149 841-89
CD74HCT643	★ 1149 842-10
CD74HCT646	★ 1149 840-182
CD74HCT648	★ 1149 840-135
CD74HCT670	★ 1149 831-72
CD74HCT688	★ 1150 806-116
CD74HCT7046	★ 1150 834-149
CD74HCT7266	828-113
CD74HCT73	★ 1149 823-148
CD74HCT74	★ 1149 820-43
CD74HCT75	★ 1150 830-158
CD74HCT85	★ 1150 807-52
CD74HCT86	★ 1149 828-52
CD74HCT93	★ 1150 813-8
CD74HCU04	811-13
CD74HCU04	★ 1149
CDM53128	★ 1673
CDM53128	★ 1677 3852-19
CDM53256	★ 1673
CDM53256	★ 1678 3852-116
CDM5332	★ 1673
CDM5332	★ 1677
CDM5332	★ 1678 3849-116
CDM5333	★ 1673
CDM5333	★ 1677 3849-117
CDM5364	★ 1673
CDM5364	★ 1677 3850-93
CDM5365	★ 1673
CDM5365	★ 1677 3850-98
CDM6116A-2	★ 1673
CDM6116A-2	★ 1676
CDM6116A-2	★ 1678 3838-121
CDM6116A-3	★ 1673
CDM6116A-3	★ 1676
CDM6116A-3	★ 1678 3838-73
CDM6116A-9	★ 1673
CDM6116A-9	★ 1676
CDM6116A-9	★ 1678 3839-34
CDM6117A-3	★ 1673
CDM6117A-3	★ 1676 3838-74
CDM6118A-3	★ 1673
CDM6118A-3	★ 1676 3838-75
CDM6264-3	★ 1673
CDM6264-3	★ 1676 3843-69
CDM6264-4	★ 1673
CDM6264-4	★ 1676 3843-42
CDP1800	¶ 376-11
CDP1800	¶ 378-4
CDP1800	¶ 378-5
CDP1800	¶ 378-6
CDP1800	¶ 379-18
CDP1800	¶ 380-17
CDP1800	¶ 380-18
CDP1800	¶ 438-14

Arranged alphanumerically from left to right.

ADVERTISERS' PRODUCT INDEX

RCA Solid State Division (Cont'd)

Device	Page-Line
CDP1802	★ 1673
	1427-33
	¶ 368-3
	¶ 374-8
	¶ 376-1
	¶ 377-2
	¶ 378-7
	¶ 378-17
	¶ 381-3
	¶ 381-6
	¶ 381-10
	¶ 382-15
	¶ 382-16
	¶ 383-10
CDP1802A	★ 1673
	1451-110
	★ 1673
	1427-34
CDP1802AC	★ 1673
	1451-111
	★ 1673
	1427-35
CDP1802BC	★ 1673
	1451-112
	★ 1673
	1427-36
CDP1802C	★ 1673
	1427-37
CDP1804	¶ 378-8
CDP1804	¶ 380-18
CDP1804A	¶ 369-11
CDP1804AC	★ 1673
	1451-102
	¶ 368-11
	★ 1673
	1427-38
CDP1804PC	★ 1673
	1451-103
CDP1805	¶ 378-8
CDP1805A	¶ 369-11
CDP1805AC	★ 1673
	1451-114
	¶ 368-11
	★ 1673
	1427-39
CDP1806A	¶ 369-11
CDP1806AC	★ 1673
	1451-113
	★ 1673
	1427-40
CDP1809	¶ 376-11
CDP1821	3834-105
CDP1821	1452-31
CDP1821C	3834-112
CDP1821C	1452-32
CDP1822	★ 1673
CDP1822	★ 1676
	3833-67
	¶ 382-14
	¶ 441-7
	★ 1673
	★ 1676
	1452-29
CDP1822C	★ 1673
CDP1822C	★ 1676
	3833-94
	★ 1673
	★ 1676
	1452-30
CDP1823	★ 1673
CDP1823	★ 1676
	3832-31
	★ 1673
	★ 1676
	1452-25
CDP1823C	★ 1673
CDP1823C	★ 1676
	3832-37
	★ 1673
	★ 1676
	1452-26
CDP1824	★ 1673
CDP1824	★ 1676
	831-127
	¶ 382-12
	¶ 441-6
	★ 1673
	★ 1676
	3832-6
	★ 1673
	★ 1676
	1452-22
CDP1824C	★ 1673
CDP1824C	★ 1676
	831-128
	★ 1673
	★ 1676
	3832-7
	★ 1673
	★ 1676
	1452-23
CDP1826C	★ 1673
CDP1826C	★ 1676
	3832-18
	★ 1673
	★ 1676
	1452-24
CDP1827	★ 1678
CDP1831	★ 1673
CDP1831	★ 1677
	3849-9
	¶ 382-13
	¶ 442-5
	★ 1673
	★ 1677
	1452-43
CDP1831C	★ 1673
CDP1831C	★ 1677
	3849-15
	★ 1673
	★ 1677
	1452-44
CDP1832	★ 1673
CDP1832	★ 1677
	3849-10
	¶ 382-13
	¶ 442-5
	★ 1673
	★ 1677
	1452-45
CDP1832C	★ 1673
CDP1832C	★ 1677
	3849-16
	★ 1673
	★ 1677
	1452-46
CDP1833	★ 1673
CDP1833	★ 1677
CDP1833	★ 1678
	3849-24
	¶ 442-6
	★ 1673
	★ 1677
	★ 1678
	1452-55
CDP1833C	★ 1673
CDP1833C	★ 1677
CDP1833C	★ 1678
	3849-26
	★ 1673
	★ 1677
	★ 1678
	1452-56
CDP1834	★ 1673
CDP1834	★ 1677
	3849-25
	¶ 442-6
	★ 1673
	★ 1677
	1452-57
CDP1834C	★ 1673
CDP1834C	★ 1677
	3849-27
	★ 1673
	★ 1677
	1452-58
CDP1835C	★ 1673
CDP1835C	★ 1677
	3849-44
	★ 1673
	★ 1677
	1452-65
CDP1837C	★ 1673
CDP1837C	★ 1677
	3850-24
	★ 1673
	★ 1677
	1452-66
CDP1851	★ 1673
CDP1851	★ 1679
	1452-12
	¶ 373-2
	¶ 373-3
CDP1851C	★ 1673
CDP1851C	★ 1679
	1452-13
CDP1852	★ 1673
CDP1852	★ 1679
	1452-115
	¶ 373-4
	¶ 381-10
CDP1852C	★ 1673
CDP1852C	★ 1679
	842-66
CDP1853	★ 1673
CDP1853	★ 1679
	816-151
	★ 1673
	★ 1679
	1452-8
CDP1853C	★ 1673
CDP1853C	★ 1679
	816-152
	★ 1673
	★ 1679
	1452-9
CDP1854	¶ 373-5
CDP1854A	★ 1673
CDP1854A	★ 1679
	1452-71
CDP1854AC	★ 1673
CDP1854AC	★ 1679
	2901-75
	★ 1673
	★ 1679
	1452-72
CDP1855	★ 1673
CDP1855	★ 1679
	1452-2
	¶ 382-11
CDP1855C	★ 1673
CDP1855C	★ 1679
	1452-3
CDP1856	★ 1673
CDP1856	★ 1679
	1452-87
	¶ 382-15
CDP1856C	★ 1673
CDP1856C	★ 1679
	1452-88
CDP1857	★ 1673
CDP1857	★ 1679
	1452-93
	¶ 382-15
CDP1857C	★ 1673
CDP1857C	★ 1679
	1452-94
CDP1858	★ 1673
CDP1858	★ 1676
CDP1858	★ 1679
	1452-99
CDP1858C	★ 1673
CDP1858C	★ 1676
CDP1858C	★ 1679
	1452-100
CDP1859	★ 1673
CDP1859	★ 1676
CDP1859	★ 1679
	1452-105
CDP1859C	★ 1673
CDP1859C	★ 1676
CDP1859C	★ 1679
	1452-106
CDP1863	★ 1673
CDP1863	★ 1679
	1452-16
CDP1863C	★ 1673
CDP1863C	★ 1679
	1452-17
CDP1866	★ 1673
CDP1866	★ 1676
CDP1866	★ 1679
	1451-117
CDP1866C	★ 1673
CDP1866C	★ 1676
CDP1866C	★ 1679
	1451-118
CDP1867	★ 1673
CDP1867	★ 1676
CDP1867	★ 1679
	1451-119
CDP1867C	★ 1673
CDP1867C	★ 1676
CDP1867C	★ 1679
	1451-120
CDP1868	★ 1673
CDP1868	★ 1676
CDP1868	★ 1679
	1451-121
CDP1868C	★ 1673
CDP1868C	★ 1676
CDP1868C	★ 1679
	1451-122
CDP1869	¶ 378-4
CDP1869	¶ 383-10
CDP1869	¶ 394-14
CDP1869	¶ 430-1
CDP1869	¶ 436-1
CDP1869C	★ 1673
CDP1869C	★ 1679
	1452-77
CDP1870	¶ 376-11
CDP1870	¶ 378-4
CDP1870	¶ 383-10
CDP1870	¶ 394-14
CDP1870	¶ 430-1
CDP1870	¶ 436-1
CDP1870C	★ 1673
CDP1870C	★ 1679
	1452-78
CDP1871A	★ 1673
CDP1871A	★ 1679
	2880-9
	★ 1673
	★ 1679
	1451-115
CDP1871AC	★ 1673
CDP1871AC	★ 1679
	2880-10
	★ 1673
	★ 1679
	1451-116
CDP1872C	★ 1673
CDP1872C	★ 1679
	842-67
	★ 1673
	★ 1679
	1452-116
CDP1873C	★ 1673
CDP1873C	★ 1679
	1452-82
CDP1874C	★ 1673
CDP1874C	★ 1679
	842-68
	★ 1673
	★ 1679
	1452-117
CDP1875C	★ 1673
CDP1875C	★ 1678
CDP1875C	★ 1679
	842-69
	★ 1673
	★ 1678
	★ 1679
	1452-118
CDP1876	¶ 376-11
CDP1876	¶ 378-4
CDP1876	¶ 383-10
CDP1876	¶ 430-1
CDP1876C	★ 1673
CDP1876C	★ 1679
	1452-79
CDP1877	★ 1673
CDP1877	★ 1679
	1452-14
CDP1877C	★ 1673
CDP1877C	★ 1679
	1452-15
CDP1878	¶ 356-16
CDP1878C	★ 1673
CDP1878C	★ 1679
	1452-81
CDP1879	★ 1673
CDP1879	★ 1679
	1452-33
	¶ 356-16
CDP1879C-1	★ 1673
CDP1879C-1	★ 1679
	1452-34
CDP1881	★ 1673
CDP1881	★ 1676
CDP1881	★ 1679
	1451-123
CDP1881C	★ 1673
CDP1881C	★ 1676
CDP1881C	★ 1679
	1451-124
CDP1882	★ 1673
CDP1882	★ 1676
CDP1882	★ 1679
	1451-125
	1452-107
CDP1882C	★ 1673
CDP1882C	★ 1676
CDP1882C	★ 1679
	1451-126
	1452-108
CDP1883	★ 1673
CDP1883	★ 1676
CDP1883	★ 1679
	1451-127
	1452-109
CDP1883C	★ 1673
CDP1883C	★ 1676
CDP1883C	★ 1679
	1452-110
CDP18S005	¶ 376-12
CDP18S005	¶ 378-11
CDP18S007	¶ 376-12
CDP18S007	¶ 378-11
CDP18S008	1819-17
	¶ 376-12
CDP18S020	¶ 378-11
CDP18S020	¶ 394-14
CDP18S024	¶ 378-11
CDP18S025	¶ 378-11
CDP18S480	¶ 437-2
CDP18S600	2009-1
CDP18S601A	2009-6
CDP18S602	2009-4
CDP18S603A	2009-7
CDP18S604B	2009-8
CDP18S605	2009-5
CDP18S606	2009-10
CDP18S607	2009-9
CDP18S608	2009-11
CDP18S609	2009-12
CDP18S610	2009-13
CDP18S620	2033-45
CDP18S621	2033-49
CDP18S622	2033-47
	¶ 383-7
CDP18S623A	2033-46
CDP18S625	2033-48
CDP18S626	2033-51
CDP18S627	2033-44
CDP18S629	2033-50
CDP18S640A	2033-38
CDP18S640A1	2033-39
CDP18S641	2033-40
	¶ 385-4
CDP18S642	2033-32
CDP18S643A	2033-28
CDP18S644	2033-26
	¶ 385-4
CDP18S646	2033-42
CDP18S647	2033-30
CDP18S648	2033-29
CDP18S650	2033-33
CDP18S651	2033-24
CDP18S652	2033-53
CDP18S653V1	2033-35
CDP18S653V2	2033-34
CDP18S653V3	2033-37
CDP18S653V4	2033-36
CDP18S654	2033-25
CDP18S657	2033-31
CDP18S658	2033-27
CDP18S660	2033-52
CDP18S661	¶ 385-4
CDP18S662	2033-43
CDP18S663	2033-41
CDP18S691	¶ 378-11
CDP18S693	1819-18
	¶ 385-4
CDP18S694	1819-19
CDP18S695	1819-20
CDP18U42	¶ 437-4
CDP6402D	★ 1673
CDP6402D	★ 1679
	2901-83
CDP6402E	★ 1673
CDP6402E	★ 1679
	2901-84
CDP65516-43	★ 1673
CDP65516-43	★ 1677
	3849-55
CDP65516-55	★ 1673
CDP65516-55	★ 1677
	3849-64
CDP65C51-1	★ 1673
CDP65C51-1	★ 1679
	2901-88
	★ 1673
	★ 1679
	1452-73
CDP65C51-2	★ 1673
CDP65C51-2	★ 1679
	2901-89
CDP6805	★ 1678
	¶ 368-12
CDP6805E2	★ 1673
	1454-21
	¶ 374-7
	★ 1673
	1427-41
CDP6805E3	★ 1673
	1454-70
	★ 1673
	1427-42
CDP6805F2	★ 1673
	1454-16
	¶ 363-2
	★ 1673
	1429-1
CDP6805G2	★ 1673
	1454-17
	¶ 364-9
	★ 1673
	1429-2
CDP6818	★ 1673
CDP6818	★ 1679
	1454-148
CDP6823	★ 1673
CDP6823	★ 1679
	1455-41
CDP6848	★ 1673
CDP6848	★ 1679
	1470-13
CDP6848C	★ 1673
CDP6848C	★ 1679
	1470-61
CDP6853	★ 1673
CDP6853	★ 1679
	1452-74
CDP68H68	2838-5
CDP68HC04P2	★ 1673
CDP68HC04P3	★ 1673
CDP68HC05C4	★ 1673
	1454-52
CDP68HC05D2	★ 1673
	1454-53
CDP68HC68	★ 3216
CDP68HC68A1	★ 1673
CDP68HC68A1	★ 1679
CDP68HC68T1	★ 1673
CDP68HC68T1	★ 1679
CDP 1802	¶ 374-9
CMM5104/1RZ	3840-81
CMM5114/1RZ	3836-91
CMOS/SOS	★ 4742
CMOS II	★ 4742
CO40061	3832-88
COSMAC	¶ 368-9
COSMAC 1802	¶ 373-16
GP001	¶ 368-10
GP001	¶ 374-1
GP001	¶ 376-10
GP001AD	1449-113
GP201AD	1449-121
GP301AD	1449-123
GP302AD	1449-124
GP501AD	1449-116

¶ Indicates page number in Application Note Directory.
★ Indicates additional data is provided on the page noted.

RCA Solid State Division (Cont'd)

Device	Page-Line
GP502	¶ 363-1
GP502	¶ 374-1
GP502	¶ 376-10
GP502AD	1462-102
GP503	¶ 352-10
GP503AD	1449-126
GP504AD	1449-114
GP505AD	1449-122
GP506AD	1449-115
GP507AD	1449-118
GP508AD	1449-117
GP509AD	1449-120
GP510AD	1449-125
GP511AD	1449-119
MB80C	2009-2
MB80N	2009-3
MIL-M-38510	★ **704**
MOS IID	★ **4742**
MS2000	1819-21
MS2000-Z	1821-1
MWS5101	★ **1673**
MWS5101	★ **1676**
MWS5101DL3	3833-90
MWS5101EL2	3833-65
MWS5101EL3	3833-91
MWS5114-1	★ **1673**
MWS5114-1	★ **1676**
	3836-92
MWS5114-2	★ **1673**
MWS5114-2	★ **1676**
	3836-79
MWS5114-3	★ **1673**
MWS5114-3	★ **1676**
	3836-56
PA40250	4454-12
PA40450	4454-13
PA40650	★ **4742**
	4454-15
PA40850	★ **4742**
	4454-16
PA41000	★ **4742**
	4454-18
PA41200	★ **4742**
	4454-19
PA50800	★ **4742**
	4454-17
PA51400	★ **4742**
	4454-20
PA52200	★ **4742**
	4454-21
PA53200	★ **4742**
	4454-22
PA54200	★ **4742**
	4454-23
PA56000	★ **4742**
	4454-24
PA60650	★ **4742**
	4454-14
PA61200	★ **4742**
	4454-11
PACMOS II	★ **4742**
	4481-9
PACMOS IID	4481-10
PACMOS III D	4481-8
PACMOS SOS	★ **4742**
	4481-15
PaCMOS	4491-36
PaCMOS-1	4481-12
PaCMOS-2	★ **4742**
	4481-11
PaCMOS-C2L	★ **4742**
	4481-13
RCA DESIGN SYSTEM	4461-21
RCA DESIGN SYSTEM	4461-24
RCA DESIGN SYSTEM	4461-28
RCA DESIGN SYSTEM	4484-13
RCA DESIGN SYSTEM	4484-17
RCA DESIGN SYSTEM	4484-21
SOS-1 Library	★ **4742**
	4481-16
SOS-2 Library	★ **4742**
	4481-14
TCC-244	3833-68

Reticon

Device	Page-Line
BAC-32	¶ 431-1
CCPD128x4	3400-7
CCPD128x8	3400-8
R5601	844-116
	¶ 431-3
R5602A-8	3377-5
RA-128x128	3399-126
RA100X100A	3400-1
RA128X128A	3400-2
RA14X41	3400-3
RA256x256B	3399-127
RD5106	★ **3535**
	3398-42
RD5107	★ **3535**
	3398-43
RD5108	★ **3535**
	3398-41
RF5609	★ **3533**
	3377-21
RF5611	★ **3533**
	3379-51
RF5612	★ **3533**
	3379-54
RF5613	★ **3533**
	3379-52
RF5614	★ **3533**
	3377-6
RF5615	★ **3533**
	3377-7
RF5616	★ **3533**
	3377-8
RF5633	3377-4
RF5651	★ **3533**
	3379-50
RL1024C	3400-21
RL1024G	3400-22
RL1024H	3400-23
RL1024S	3400-24
RL1024SF	3400-25
RL1024SFX	3400-45
RL128EC	3400-26
RL128G	3400-27
RL128L	3400-28
RL128S	3400-29
RL128SF	3400-30
RL128SFX	3400-46
RL1728H	3400-31
RL2048H	3400-32
RL256C	3400-33
RL256EC	3400-34
RL256G	3400-35
RL32WD	3400-36
RL4096	3400-37
RL512C	3400-38
RL512EC	3400-39
RL512G	3400-40
RL512S	3400-41
RL512SF	3400-42
RL512SFX	3400-47
RL64A	3400-43
RL64W	3400-44
RL Series	¶ 423-16
RM5604	3377-22
RM5606	3377-23
RM5630	★ **3534**
	3380-44
RM5631	★ **3534**
	3380-45
RM5632	★ **3534**
	3380-51
RM5635	★ **3534**
	3380-53
RM5636	★ **3534**
	3380-26
RM5637	★ **3534**
	3380-27
RM5638	★ **3534**
	3380-28
RM605	3377-24
R064	3400-9
R0720B	3400-10
RT0032A	3404-100
RT5601A-1	3405-13
RT5601A-2	3405-14
RT5602-1	3377-9
RT5602-3	3377-10
RT5602-7	3377-11
RT5640	★ **3165**
	844-32
	★ **3165**
	2839-23
	★ **3165**
	3379-85
RT5910	3380-29
RU5620	3398-10
RU5621	3377-25
RU5621	3398-7
RU5621	3398-34
RU5622	3377-26
RU5622	3398-8
RU5622	3398-35
RU5626	4464-43
SAD1024	¶ 431-4
SAD1024A	¶ 416-7
SAD1024A	¶ 416-14
SAD1024A	¶ 431-8

S MOS Systems

Device	Page-Line
SED1200	2874-84
SED1500	2874-104
SED9420D	1467-64
SLA5040	★ **4752**
	4456-1
SLA5080	★ **4752**
	4456-2
SLA5120	★ **4752**
	4456-4
SLA5210	★ **4752**
	4456-7
SLA5300	★ **4752**
	4456-9
SLA6080	★ **4752**
	4456-3
SLA6140	★ **4752**
	4456-5
SLA6170	★ **4752**
	4456-6
SLA6270	★ **4752**
	4456-8
SLA6330	★ **4752**
	4456-10
SLA6430	★ **4752**
	4456-11
SLA6620	★ **4752**
	4456-12
SMC1112	1411-17
SMC4151F	1411-18
SMC4170F	1411-19
SMC82AC51	1457-348
SMC82C37	1461-109
SMC82C37AC	1457-360
SMC82C37AC-4	1457-361
SMC82C37AC-5	1457-362
SMC82C51A	1457-207
SMC82C51A	1457-349
SMC82C54A	1459-44
SMC82C54A	1457-237
SMC82C54AC	1461-134
SMC82C55A-5	1459-50
SMC82C55A-5	1457-248
SMC82C55AC-5	1457-399
SMC82C59AC	1461-124
SMC82C59AC	1461-128
SMC8340F	1429-18
SMC84C00	1460-68
SMM23100	★ **4178**
SMM2325	★ **4178**
	3853-25
SMM2326	★ **4178**
	3853-26
SMM2364	★ **4178**
	3851-52
SMM2365	★ **4178**
	3851-53
SMM63100C	★ **4178**
SMM63100C	★ **4179**
	3853-87
SMM6313-25	★ **4178**
	3852-20
SMM6325	★ **4178**
	3852-122
SMM6326	★ **4178**
	3852-123
SMM73100	★ **4178**
SPM27C64-15	★ **4178**
	3821-75
SPM27C64-20	★ **4178**
	3821-91
SRM2016C-15	★ **4176**
SRM2016C-15	★ **4178**
	3838-76
SRM2016C-20	★ **4176**
SRM2016C-20	★ **4178**
	3838-122
SRM2016C-25	★ **4176**
SRM2016C-25	★ **4178**
	3839-35
SRM2017C-15	★ **4176**
SRM2017C-15	★ **4178**
	3838-77
SRM2017C-20	★ **4176**
SRM2017C-20	★ **4178**
	3838-123
SRM2017C-25	★ **4176**
SRM2017C-25	★ **4178**
	3839-36
SRM2018C-15	★ **4176**
SRM2018C-15	★ **4178**
	3838-78
SRM2018C-20	★ **4176**
SRM2018C-20	★ **4178**
	3839-1
SRM2018C-25	★ **4176**
SRM2018C-25	★ **4178**
	3839-37
SRM2064C-120	★ **4178**
	3843-43
SRM2064C-15	★ **4178**
	3843-70
SRM2114C-3	★ **4178**
	3836-80
SRM2261	★ **4178**
SRM2264	★ **4177**
SRM2264	★ **4178**
SRM2264C10	3843-23
SRM2264C12	3843-44
SRM2264C90	3843-14
SRM2268	★ **4178**
SRM2367	★ **4178**
SRM27128	★ **4178**
SRM27C256	★ **4178**
SRM82C55AC	1461-136
STC2560	3378-101
STC2565	3378-102
STC2580C	3379-10
STC9120C	3380-72
STC9471	3380-11
STC9472	3380-9
STC9481	3380-32
STC9482	3380-31
SVM7810	3320-121
SVM7910	3316-140
SVM7920	3316-141
SVM7930	3316-142
SVM7940	3316-143
SVM7950	3316-144
SVM7960	3316-145
SVM7970	3316-146
SVM7990	3316-147

Sahni Corporation

Device	Page-Line
209HCT01	844-84
CMOS Library	4481-17
LA100	4454-25
LA1200	4454-28
LA200	4454-26
LA500	4454-27
MFAxx	4464-44
PROPRIETARY	4466-16

Samsung Semiconductor

Device	Page-Line
74HC137	818-114
74HC138	818-23
74HC139	817-115
74HC237	818-115
74HC240	839-84
74HC241	839-158
74HC244	840-79
74HC245	841-132
74HC373	829-138
74HC374	822-78
74HC533	830-64
74HC534	821-164
74HC540	810-66
74HC541	810-67
74HC563	830-65
74HC564	821-165
74HC573	829-139
74HC574	822-79
74HC640	841-44
74HC643	841-45
74HC646	840-165
74HC648	840-119
74HCT240	839-112
74HCT241	840-10
74HCT244	840-11
74HCTLS245	841-167
KA1222	3319-49
KA1241	3321-59
KA2101	3326-52
KA2102A	3326-53
KA2103	3326-87
KA2104	3326-88
KA2151	3325-5
KA2153	3324-121
KA2181	3322-156
KA2182	3322-157
KA2183	3322-158
KA2201	3318-44
KA2206	3318-154
KA2209	3318-155
KA2210	3318-156
KA2212	3318-45
KA2213	3318-46
KA2220	3319-38
KA2222	3319-50
KA2224	3319-70
KA2225	3319-71
KA2226	3319-72
KA2227	3319-51
KA2227	3319-73
KA2243	3322-22
KA2247	3321-66
KA2248	3321-67
KA2249	3321-122
KA2261	3322-120
KA2263	3322-121
KA2264	3322-122
KA2281	★ **3220**
	2876-123
KA2283	★ **3220**
	2876-124
KA2284	★ **3220**
	2876-121
KA2285	★ **3220**
	2876-122
KA2286	★ **3220**
	2876-119
KA2287	★ **3220**
	2876-120
KA2302	3317-2
KA2303	3317-3
KA2401	3400-107
KA2402	3400-108
KA2403	3400-109
KA2410	★ **3679**
	3382-34
KA2411	★ **3679**
	3382-35
KA2412	★ **3679**
	3381-72
KA2413	★ **3679**
	3382-88
KA2418	★ **3679**
	3382-36
KA2419	★ **3679**
	3382-37
KA2420	★ **3679**
	3381-31
KA2803	3327-140
KA2804	3317-9
KA2911	3327-42
KA2912	3327-43
KA2913	3327-4
KA2914	3327-5
KA2916	3327-44
KA2921	3325-107
KA33V	3317-7
KG10200	★ **4746**
	4454-29
KG10400	★ **4746**
	4454-30
KG10600	★ **4746**
	4454-31
KG10800	★ **4746**
	4454-32
KG11200	★ **4746**
	4454-33
KG11600	★ **4746**
	4454-34
KG12000	★ **4746**
	4454-35
KM2816A	★ **4140**
	3812-70
KM2816A-25	★ **4140**
	3812-44
KM2816A-35	★ **4140**
	3812-93
KM2817A-25	★ **4140**
	3812-55
KM2817A-30	★ **4140**
	3812-77
KM2817A-35	★ **4140**
	3812-104
KM2864A	★ **4140**
	3813-25
KM2865A	3813-26
KM41256-10	3828-98
KM41256-12	3829-19
KM41256-15	3829-54
KM41257-10	★ **4140**
	3828-99
KM41257-12	★ **4140**
	3829-20
KM41257-15	★ **4140**
	3829-55
KM4128-15	3828-58
KM4164-12	3827-106
KM4164-15	3827-123
KM4164A-12	3827-37
KM4164A-15	3827-65
KM4164A-20	3827-86
KM4164B-12	3827-38
KM4164B-15	3827-66
KM6264-10	★ **4140**
	3843-24
KM6264-12	★ **4140**
	3843-45
KM6264-15	★ **4140**
	3843-71
KM6816-15	3838-79
KM6816-20	3839-2
KS51000	★ **4746**
	1450-49
	★ **4746**
	1411-20
KS51200	1450-50
KS51200	1411-21
KS5171	3320-59
KS5189	3320-134
KS5194	3320-136
KS5198	3320-128
KS5199A	3320-129
KS52000	★ **4746**
	1450-51
	★ **4746**
	1411-22
KS5204	3320-60
KS5205	3320-61
KS5206	3320-62
KS5207	3320-63
KS5310A	3320-111
KS5310B	3320-112
KS5310C	3320-113
KS5311A	3320-114
KS5311B	3320-115
KS5311C	3320-116
KS5313	3320-117
KS5314	3320-118
KS5340	3320-119
KS5380	3320-120
KS5390	3321-11
KS5804	★ **3679**
	3378-103
KS5805	★ **3679**
	3378-104
KS5806	3378-105
KS5808	★ **3679**
	3382-89
KS6022	3320-1
KS6024	3320-2
KS7126	★ **3220**
	2848-44
KS74ACT244	★ **113**
KS74ACT244	★ **1153**
KS74AHCT00	★ **1153**
	825-46
KS74AHCT02	★ **1153**
	827-115

Arranged alphanumerically from left to right.

Samsung Semiconductor (Cont'd)

Device	Page-Line
KS74AHCT03	★ 1153 825-127
KS74AHCT04	★ 1153 810-178
KS74AHCT05	★ 1153 810-179
KS74AHCT08	★ 1153 824-49
KS74AHCT09	★ 1153 824-104
KS74AHCT10	★ 1153 824-174
KS74AHCT107	★ 1153 823-107
KS74AHCT109	★ 1153 822-173
KS74AHCT11	★ 1153 824-1
KS74AHCT112	★ 1153 823-70
KS74AHCT12	★ 1153 824-175
KS74AHCT121	★ 1153 834-1
KS74AHCT123	★ 1153
KS74AHCT13	★ 1153 838-61
KS74AHCT139	★ 1153 817-93
KS74AHCT148	★ 1153 808-60
KS74AHCT154	★ 1153 819-13
KS74AHCT155	★ 1153 817-94
KS74AHCT157	★ 1153 832-58
KS74AHCT158	★ 1153 832-100
KS74AHCT160	★ 1153 814-163
KS74AHCT161	★ 1153 811-174
KS74AHCT162	★ 1153 814-114
KS74AHCT163	★ 1153 811-118
KS74AHCT164	★ 1153 836-32
KS74AHCT165	★ 1153 835-178
KS74AHCT166	★ 1153 836-68
KS74AHCT173	★ 1153 820-131
KS74AHCT174	★ 1153 820-178
KS74AHCT175	★ 1153 820-86
KS74AHCT191	★ 153 813-18
KS74AHCT193	★ 1153 815-26
KS74AHCT210	★ 1153 839-64
KS74AHCT238	★ 1153 818-82
KS74AHCT239	★ 1153 817-95
KS74AHCT240	★ 1153 839-65
KS74AHCT241	★ 1153 840-49
KS74AHCT244	★ 1153 840-65
KS74AHCT245	★ 1153 841-109
KS74AHCT257	★ 1153 832-134
KS74AHCT258	★ 1153 832-167
KS74AHCT259	★ 1153 830-169
KS74AHCT266	★ 1153 828-93
KS74AHCT273	★ 1153 821-52

Device	Page-Line
KS74AHCT299	★ 1153 836-143
KS74AHCT32	★ 1153 826-125
KS74AHCT365	★ 1153 809-112
KS74AHCT366	★ 1153 809-181
KS74AHCT367	★ 1153 839-3
KS74AHCT368	★ 1153 809-182
KS74AHCT373	★ 1153 829-111
KS74AHCT374	★ 1153 822-48
KS74AHCT393	★ 1153 812-141
KS74AHCT399	★ 1153 833-1
KS74AHCT423	★ 1153
KS74AHCT51	★ 1153 826-44
KS74AHCT533	★ 1153 830-37
KS74AHCT534	★ 1153 821-137
KS74AHCT540	★ 1153 810-54
KS74AHCT541	★ 1153 841-110
KS74AHCT563	★ 1153 830-38
KS74AHCT564	★ 1153 821-138
KS74AHCT573	★ 1153 829-112
KS74AHCT574	★ 1153 822-49
KS74AHCT590	★ 1153 813-104
KS74AHCT592	★ 1153 813-82
KS74AHCT593	★ 1153 813-83
KS74AHCT640	★ 1153 841-30
KS74AHCT643	★ 1153 841-67
KS74AHCT646	★ 1153 840-151
KS74AHCT648	★ 1153 840-105
KS74AHCT679	★ 1153 806-95
KS74AHCT680	★ 1153 806-96
KS74AHCT688	★ 1153 806-126
KS74AHCT73	★ 1153 823-108
KS74AHCT74	★ 1153 820-14
KS74AHCT86	★ 1153 828-21
KS74HCTLS00	★ 1153 825-78
KS74HCTLS01	★ 1153 825-140
KS74HCTLS02	★ 1153 827-148
KS74HCTLS03	★ 1153 825-141
KS74HCTLS04	★ 1153 811-45
KS74HCTLS05	★ 1153 811-46
KS74HCTLS08	★ 1153 824-78
KS74HCTLS09	★ 1153 824-108
KS74HCTLS10	★ 1153 825-11
KS74HCTLS107	★ 1153 823-149
KS74HCTLS109	★ 1153 823-28
KS74HCTLS11	★ 1153 824-23
KS74HCTLS112	★ 1153 823-95

Device	Page-Line
KS74HCTLS12	★ 1153 825-12
KS74HCTLS132	★ 1153 838-160
KS74HCTLS138	★ 1153 818-55
KS74HCTLS139	★ 1153 817-143
KS74HCTLS155	★ 1153 817-144
KS74HCTLS157	★ 1153 832-89
KS74HCTLS158	★ 1153 832-124
KS74HCTLS160	★ 1153 815-5
KS74HCTLS161	★ 1153 812-12
KS74HCTLS162	★ 1153 814-139
KS74HCTLS163	★ 1153 811-149
KS74HCTLS164	★ 1153 836-60
KS74HCTLS165	★ 1153 836-16
KS74HCTLS166	★ 1153 836-90
KS74HCTLS174	★ 1153 821-26
KS74HCTLS175	★ 1153 820-113
KS74HCTLS191	★ 1153 813-25
KS74HCTLS193	★ 1153 835-47
KS74HCTLS210	★ 1153 839-113
KS74HCTLS238	★ 1153 818-24
KS74HCTLS239	★ 1153 817-145
KS74HCTLS240	★ 1153 839-114
KS74HCTLS241	★ 1153 840-12
KS74HCTLS244	★ 1153 840-88
KS74HCTLS245	★ 1153
KS74HCTLS257	★ 1153 832-156
KS74HCTLS258	★ 1153 832-181
KS74HCTLS259	★ 1153 831-4
KS74HCTLS266	★ 1153 828-114
KS74HCTLS273	★ 1153 821-85
KS74HCTLS299	★ 1153 836-167
KS74HCTLS365	★ 1153 809-156
KS74HCTLS366	★ 1153 810-27
KS74HCTLS367	★ 1153 809-157
KS74HCTLS368	★ 1153 810-28
KS74HCTLS373	★ 1153 829-185
KS74HCTLS374	★ 1153 822-126
KS74HCTLS393	★ 1153 812-190
KS74HCTLS533	★ 1153 830-104
KS74HCTLS534	★ 1153 822-7
KS74HCTLS540	★ 1153 810-111
KS74HCTLS541	★ 1153 810-112
KS74HCTLS563	★ 1153 830-105
KS74HCTLS564	★ 1153 822-8
KS74HCTLS573	★ 1153 829-186
KS74HCTLS574	★ 1153 822-127

Device	Page-Line
KS74HCTLS640	★ 1153 841-57
KS74HCTLS643	★ 1153 841-58
KS74HCTLS646	★ 1153 840-183
KS74HCTLS648	★ 1153 840-136
KS74HCTLS73	★ 1153 823-150
KS74HCTLS74	★ 1153 820-44
KS74HCTLS76	★ 1153 823-29
KS74HCTLS78	★ 1153 823-106
KS74HCTLS86	★ 1153 828-53
KSV3100A	★ 3220 2837-34 2859-55
LM311	★ 3679 3313-12
LM323	★ 3679 3385-40
LM324	★ 3679 3370-40
LM324A	★ 3679 3335-6
LM339	★ 3679 3315-55
LM339A	★ 3679 3315-29
LM358A	★ 3679 3363-60
LM393	★ 3679 3314-20
LM393A	★ 3679 3313-40
LM567C	★ 3679 3375-153 3381-116
LM723	★ 3679 3393-126
LM741C	★ 3679 3355-22
MC1458	★ 3679 3367-4
MC1458C	★ 3679 3368-26
MC1488	★ 3220 2881-45
MC1489	★ 3220 2885-22
MC1489A	★ 3220 2885-31
MC3361	3321-138
MC4558	★ 3679 3366-6
MC4558C	★ 3679 3367-27
MC7805C	★ 3679 3384-67
MC7806C	★ 3679 3385-90
MC7808C	★ 3679 3386-35
MC7812C	★ 3679 3387-13
MC7815C	★ 3679 3388-12
MC7818C	★ 3679 3388-113
MC7824C	★ 3679 3389-76
MC7885C	★ 3679 3386-77
MC78L05	★ 3679 3384-14
MC78L12	★ 3679 3386-117
MC78L15	★ 3679 3387-119
MC78M05C	★ 3679 3384-42
MC78M06C	★ 3679 3385-81
MC78M08C	★ 3679 3386-23
MC78M10C	★ 3679 3386-98

Device	Page-Line
MC78M12C	★ 3679 3387-1
MC78M15C	★ 3679 3388-2
MC78M18C	★ 3679 3388-103
MC78M24C	★ 3679 3389-66
MC7902C	★ 3679 3389-123
MC7905-2C	★ 3679 3390-88
MC7905C	★ 3679 3390-25
MC7906C	★ 3679 3390-93
MC7908C	★ 3679 3390-113
MC7912C	★ 3679 3391-32
MC7915C	★ 3679 3391-98
MC7918C	★ 3679 3392-14
MC7924C	★ 3679 3392-55
MC79L05C	★ 3679 3390-9
MC79L12C	★ 3679 3391-13
MC79L15C	★ 3679 3391-77
MC79M05C	3390-19
MC79M06C	3390-91
MC79M08C	★ 3679 3390-106
MC79M10	★ 3679 3391-2
MC79M12C	★ 3679 3391-26
MC79M15C	★ 3679 3391-91
MC79M18	★ 3679 3392-9
MC79M24C	★ 3679 3392-52
MK5089	3382-90
MK50981	3378-106
MK50992	3378-107
MK50993	3378-108
ML8204	3382-38
NE555	★ 3679 3383-47
NE556	★ 3679 3383-86
NE558	★ 3679 3383-100
SA1000	★ 4746
SA1100	★ 4746
SA1200	★ 4746
SD2200	★ 4746
SD2400	★ 4746
SD2500	★ 4746
μA78S40	★ 3679 3396-57

SBE, Inc.

Device	Page-Line
1010	2013-33
1020	2013-29
560	2013-28
590	2013-31
802	1821-8
809	1821-9
M68K10	2029-19
PDS-100	1821-10

SDA Systems

Device	Page-Line
Cell Edge	4930-3
Chip Edge	4931-1
Custom Edge	5001-3
DRC	5012-2
Standard Edge	4931-2
Standard Edge	4998-3
Test Edge	4975-1
Timing Analyzer	4965-2

SEEQ Technology, Inc.

Device	Page-Line
27128-2	★ 4142 3823-11
27128-20	★ 4142 3823-12
27128-25	★ 4142 3823-36
27128-3	★ 4142 3823-59
27128-30	★ 4142 3823-60
27128-4	★ 4142 3823-76
27128-450	★ 4142 3823-77
27256-20	★ 4143 3824-29
27256-25	★ 4143 3824-55
27256-30	★ 4143 3824-77
2764-2	★ 4142 3821-102
2764-20	★ 4142 3821-103
2764-25	★ 4142 3822-17
2764-3	★ 4142 3822-45
2764-30	★ 4142 3822-46
2764-4	★ 4142 3822-59
2764-45	★ 4142 3822-71
27C256-25	3824-51
27C256-3	3824-73
2816A-250	★ 4146 3812-45
2816A-300	★ 4146 3812-71
2816A-350	★ 4146 3812-94
2816AH-250	★ 4146 3812-57
2816AH-300	★ 4146 3812-78
2817A-200	★ 4148 3812-28
2817A-250	★ 4148 3812-61
2817A-300	★ 4148 3812-79
2817AH-200	★ 4148 3812-29
2817AH-250	★ 4148 3812-62
2817AH-300	★ 4148 3812-80
2864-250	★ 4149 3813-41
2864-300	★ 4149 3813-57
2864-350	★ 4149 3813-42
2864H-250	★ 4149 3813-43
2864H-300	★ 4149 3813-58
28C256-250	★ 4150 3813-98
28C64	3813-51
5133-300	3822-47
5133-4	3822-60
5133-450	3822-72
5143-2	3823-13
5143-200	3823-14
5143-250	3823-37
5143-3	3823-61
5143-300	3823-62
5143-4	3823-78
5143-450	3823-79
51B33-200	3813-77
5213	¶ 434-6
52B13	¶ 434-15
52B13-200	★ 4144 3812-20
52B13-250	★ 4144 3812-46

¶ Indicates page number in Application Note Directory.
★ Indicates additional data is provided on the page noted.

SEEQ Technology, Inc. (Cont'd)

Device	Page-Line
52B13-350	★ 4144
	3812-95
52B13H-200	★ 4144
	3812-22
52B13H-250	★ 4144
	3812-47
52B13H-350	★ 4144
	3812-98
52B33	¶ 434-12
52B33-200	★ 4144
	3813-78
52B33-250	★ 4144
	3813-79
52B33-3	★ 4144
	3813-52
52B33-300	★ 4144
	3813-53
52B33-350	★ 4144
	3813-83
52B33H-200	★ 4144
	3813-27
52B33H-250	★ 4144
	3813-40
52B33H-3	★ 4144
	3813-54
52B33H-300	★ 4144
	3813-55
5516A-250	★ 4146
	3812-48
5516A-300	★ 4146
	3812-72
5517A	★ 4148
	3812-30
5517A-250	★ 4148
	3812-56
5517A-300	★ 4148
	3812-81
5517AH	★ 4148
	3812-31
5517AH-250	★ 4148
	3812-63
5517AH-300	★ 4148
	3812-82
55B33-250	3813-80
55B33H-250	3813-81
72720	1470-79
8001	¶ 371-14
8001	¶ 378-13
8001	¶ 379-14
8002	¶ 371-14
8002	¶ 379-14
8002	¶ 412-9
8003	1466-98
	¶ 371-14
	¶ 378-13
	¶ 379-14
8023A	1466-102
M27128-25	★ 4142
	3823-38
M27128-45	★ 4142
	3823-80
M27256-25	★ 4143
	3824-56
M27256-30	★ 4143
	3824-78
M2764-25	★ 4142
	3822-18
M2764-45	★ 4142
	3822-73
M27C256-25	3824-34
M27C256-30	3824-60
M2816A-250	★ 4146
	3812-58
M2816A-350	★ 4146
	3812-105
M2817A-200	★ 4148
	3812-32
M2817A-250	★ 4148
	3812-64
M2817A-300	★ 4148
	3812-83
M2864-250	★ 4149
	3813-44
M2864H-300	★ 4149
	3813-82
M28C256-250	★ 4150
	3813-99
M52B13-250	★ 4144
	3812-59
M52B13-300	★ 4144
	3812-73
M52B13-350	★ 4144
	3812-106
M52B13H-250	★ 4144
	3812-60
M52B13H-300	★ 4144
	3812-74
M52B13H-350	★ 4144
	3812-107
M52B33-300	★ 4144
	3813-45
M52B33H-300	★ 4144
	3813-59

Signetics

Device	Page-Line
	★ 3728
100101	★ 1173
100101	★ 1174
	848-107
100102	★ 1173
100102	★ 1174
	848-104
100107	★ 1173
100107	★ 1174
	848-116
100112	★ 1173
100112	★ 1174
	848-90
100113	★ 1173
100113	★ 1174
	848-87
100114	★ 1173
100114	★ 1174
	849-71
100117	★ 1173
100117	★ 1174
	848-110
100118	★ 1173
	848-113
100122	★ 1173
100122	★ 1174
	848-70
100123	★ 1173
100123	★ 1174
	848-93
100124	★ 1173
	849-42
100125	★ 1173
	849-45
100126	★ 1173
100126	★ 1174
	848-85
100131	★ 1173
100131	★ 1174
	848-96
100136	★ 1173
100136	★ 1174
	848-78
100141	★ 1173
100141	★ 1174
	849-40
100145	★ 1173
100145	★ 1174
	3831-8
100149	★ 4166
	849-3
	★ 4166
	3814-73
100150	★ 1173
100150	★ 1174
	848-121
100151	★ 1173
100151	★ 1174
	848-99
100155	★ 1173
100155	★ 1174
	849-31
100158	★ 1173
100158	★ 1174
	843-115
100160	★ 1173
100160	★ 1174
	849-68
100163	★ 1173
100163	★ 1174
	849-25
100164	★ 1173
100164	★ 1174
	849-34
100165	★ 1173
100165	★ 1174
	849-62
100166	★ 1173
100166	★ 1174
	848-66
100170	★ 1173
100170	★ 1174
	848-83
100171	★ 1173
100171	★ 1174
	849-28
100175	★ 1173
100175	★ 1174
	849-47
100179	★ 1173
100179	★ 1174
	848-61
100180	★ 1173
100180	★ 1174
	843-4
100181	★ 1173
100181	★ 1174
	844-45
100255	★ 1173
	849-46
100415	3834-45
100415A	3834-42
100415B	3834-34
100422	3832-117
100422A	3832-118
100422B	3832-103
100470	3839-95
100470A	3839-79
100474	849-15
100474A	849-16
10100	★ 1173
10100	★ 1174
	846-72
10101	★ 1173
10101	★ 1174
	846-98
10102	★ 1173
10102	★ 1174
	846-65
10103	★ 1173
10103	★ 1174
	846-31
10104	★ 1173
10104	★ 1174
	846-10
10105	★ 1173
10105	★ 1174
	846-90
10106	★ 1173
10106	★ 1174
	846-57
10107	★ 1173
10107	★ 1174
	846-144
10108	★ 1173
10108	★ 1174
	846-1
10109	★ 1173
10109	★ 1174
	846-81
10110	★ 1173
10110	★ 1174
	846-24
10111	★ 1173
10111	★ 1174
	846-43
10112	★ 1173
10112	★ 1174
10113	★ 1173
10113	★ 1174
	846-136
10114	★ 1173
10114	★ 1174
	848-28
10115	★ 1173
10115	★ 1174
	848-41
10116	★ 1173
10116	★ 1174
	848-29
10117	★ 1173
10117	★ 1174
	846-122
10118	★ 1173
10118	★ 1174
	846-106
10119	★ 1173
10119	★ 1174
	846-114
10121	★ 1173
10121	★ 1174
	846-130
10123	★ 1173
10123	★ 1174
	845-105
10124	★ 1173
10124	★ 1174
	847-154
10125	★ 1173
10125	★ 1174
	847-145
10129	★ 1173
10129	★ 1174
	848-34
10130	★ 1173
10130	★ 1174
	847-5
10131	★ 1173
10131	★ 1174
	845-122
10132	★ 1173
10132	★ 1174
	847-17
10133	★ 1173
10133	★ 1174
	847-31
10134	★ 1173
10134	★ 1174
	847-11
10135	★ 1173
10135	★ 1174
	845-141
10136	★ 1173
10136	★ 1174
	845-60
10137	★ 1173
10137	★ 1174
	845-67
10141	★ 1173
10141	★ 1174
	847-131
	★ 1173
	★ 1174
	3854-126
10145	847-54
10145	3831-13
10149	★ 1173
10149	★ 1174
10149	★ 4166
	847-45
	★ 1173
	★ 1174
	★ 4166
	3814-74
10155	★ 1173
10155	★ 1174
	847-40
	★ 1173
	★ 1174
	3830-111
10158	★ 1173
10158	★ 1174
	847-114
10159	★ 1173
10159	★ 1174
	847-107
10160	★ 1173
10160	★ 1174
	848-58
10161	★ 1173
10161	★ 1174
	845-86
10162	★ 1173
10162	★ 1174
	845-78
10164	★ 1173
10164	★ 1174
	847-122
10165	★ 1173
10165	★ 1174
	848-48
10171	★ 1173
10171	★ 1174
	845-98
10172	★ 1173
10172	★ 1174
	845-92
10173	★ 1173
10173	★ 1174
	847-37
10174	★ 1173
10174	★ 1174
	847-100
10175	★ 1173
10175	★ 1174
	846-152
10176	★ 1173
10176	★ 1174
	845-130
10179	★ 1173
10179	★ 1174
	845-8
10180	★ 1173
10180	★ 1174
	845-15
10181	★ 1173
10181	★ 1174
	845-28
10188	★ 1173
10188	★ 1174
	845-39
10189	★ 1173
10189	★ 1174
	845-42
10192	★ 1173
10192	★ 1174
	845-109
10210	★ 1173
10210	★ 1174
	846-44
10211	★ 1173
10211	★ 1174
	846-45
10216	★ 1173
10216	★ 1174
	848-30
10231	★ 1173
10231	★ 1174
	845-123
10415	847-78
10415A	3834-51
10415B	3834-38
10422	3833-5
10422A	3833-4
10422B	3832-110
10470	3839-98
10470A	3839-86
10474	847-79
10474	847-82
10474A	847-80
10474A	847-83
23128-20	★ 4165
	3852-7
23128-25	★ 4165
	3852-34
23128-30	★ 4165
	3852-47
23128-45	★ 4165
	3852-62
23128A-15	★ 4165
	3851-117
23128A-20	★ 4165
	3852-8
23256A-20	★ 4165
	3852-110
23256A-25	★ 4165
	3853-9
23256A-30	★ 4165
	3853-20
2332-15	★ 4165
	3849-74
2332-20	★ 4165
	3849-85
2332-25	★ 4165
	3849-93
2332-30	★ 4165
	3849-111
23512	★ 4165
23513	★ 4165
2364-15	★ 4165
	3850-47
2364-20	★ 4165
	3850-82
2364-25	★ 4165
	3851-6
2364-30	★ 4165
	3851-14
23X128-15	3851-118
23X128-20	3852-9
23X128-25	3852-35
23X128-30	3852-48
23X128A-25	3852-36
23X128A-30	3852-49
26129	★ 4165
2616-30	★ 4165
	3849-47
2616A-15	★ 4165
	3849-38
2616A-20	★ 4165
	3849-40
2616A-25	★ 4165
	3849-43
2616A-30	★ 4165
	3849-48
2632A-15	★ 4165
	3849-75
2632A-20	★ 4165
	3849-86
2632A-25	★ 4165
	3849-94
2632A-30	★ 4165
	3849-112
2632AE-30	★ 4165
	3849-113
2650A-1	1429-34
2651	¶ 377-13
2651	¶ 379-12
2651	¶ 383-4
2652	¶ 395-6
2652	¶ 395-7
2652	¶ 395-8
2652	¶ 395-10
2652	¶ 396-10
2653	¶ 395-1
2653	¶ 395-7
2653	¶ 395-8
2653	¶ 395-10
2653	¶ 396-18
2661	¶ 394-12
2661	¶ 395-1
2661	¶ 395-6
2661	¶ 395-7
2661	¶ 395-8
2661	¶ 395-10
2664-20	★ 4165
	3850-68
2664-25	★ 4165
	3850-115
2664A-15	★ 4165
	3850-48
2664A-20	★ 4165
	3850-69
2664A-25	★ 4165
	3850-116
2664A-30	★ 4165
	3851-34
2664AE-30	★ 4165
	3851-35
2665-15	★ 4165
	3850-45
2665-20	★ 4165
	3850-60
2665-25	★ 4165
	3850-102
2665-30	★ 4165
	3851-21
2670	¶ 376-6
2670/71/72/73	¶ 397-1
2671	¶ 376-6
2672	¶ 376-6
2673	¶ 376-6
2681	¶ 395-6
26810	2900-62
26814	2900-63
26818	2900-64
27C64-20	3821-92
27C64-25	3822-6
27C64-30	3822-34
2960	★ 3221
	2878-47
2964B	★ 4173
	2892-59
3207A	2892-139
3207A-1	2892-140
5400	870-189
5402	865-94
5403	871-143
5404	857-80
5405	857-142
5406	864-111
5407	864-91

Arranged alphanumerically from left to right.

Signetics (Cont'd)

Device	Page-Line
5408	869-76
5410	870-114
54107	867-161
54109	867-106
54116	875-28
54121	880-98
54123	880-146
54125	856-95
54126	856-120
54128	2884-5
5413	887-103
54132	887-149
5414	888-27
54145	862-102
54147	889-45
54148	888-147
54150	880-80
54151	879-158
54153	877-123
54154	863-176
54155	863-74
54156	863-43
54157	878-170
54158	878-78
5416	864-102
54160	860-144
54161	858-130
54163	858-177
54164	881-172
54164	3856-56
54165	882-48
54165	3855-115
54166	882-65
54166	3856-9
5417	864-82
54170	877-1
54173	866-7
54174	866-30
54175	864-265
54180	889-8
54181	855-23
54190	861-154
54191	859-162
54192	861-122
54193	860-22
54194	881-124
54194	3854-61
54195	881-34
54199	882-33
5420	869-172
5421	868-141
54221	880-126
5425	865-8
5426	864-42
5427	865-39
54279	875-75
5428	865-95
54298	879-78
5430	872-6
5432	873-26
5433	865-68
54365A	856-162
54366A	857-191
54366A	864-132
54367A	856-163
54367A	864-133
54368A	858-1
5437	871-52
5438	871-88
5439	871-89
5440	870-40
5442	862-128
5445	862-93
5450	872-120
5451	872-80
5460	872-132
5473	867-162
5474	864-212
5475	875-37
5476	868-27
5483	856-26
5485	854-63
5486	874-98
5490	860-65
5491	882-103
5491	3856-73
5492	862-11
5493	859-54
5494	3855-27
5495A	881-69
5495A	3854-62
5496	881-156
5496	3855-48
54F00	871-15
54F04	857-106
54F139	863-10
54F157	879-5
54F158	878-90
54F181	855-49
54F20	870-5
54F240	883-145
54F241	884-28
54F242	883-65
54F243	883-66
54F244	884-81
54F245	885-95
54F257	879-44
54F258	878-130
54F269	859-136
54F273	866-147
54F280	889-21
54F3037	887-65
54F3040	886-163
54F365	857-2
54F366	858-13
54F366	864-125
54F367	857-3
54F368	858-14
54F373	876-4
54F374	867-7
54F377	867-38
54F521	854-104
54F533	876-67
54F534	866-127
54F540	883-146
54F545	885-96
54F579	861-75
54F604	875-107
54F605	875-108
54F620	886-98
54F630	2878-48
54F631	2878-49
54F64	873-5
54F646	886-15
54F647	885-159
54F648	886-16
54F649	885-160
54F655	858-53
54F656	857-46
54F657	885-148
54F86	874-112
54HC240	839-88
54HC241	839-161
54HC244	840-83
54HC297	3375-18
54HCT240	839-117
54HCT241	840-17
54HCT244	840-18
54HCT297	3375-19
54HCT384	843-46
54HCT4002	827-28
54LS00	871-34
54LS01	871-185
54LS02	874-36
54LS03	871-186
54LS04	857-124
54LS05	857-171
54LS08	869-119
54LS09	869-158
54LS10	870-151
54LS107	868-12
54LS109	867-135
54LS11	869-35
54LS112	868-100
54LS113	868-64
54LS125A	856-112
54LS126A	856-136
54LS13	887-124
54LS132	888-7
54LS132A	888-8
54LS136	874-81
54LS138	863-125
54LS139	863-25
54LS14	888-47
54LS151	880-3
54LS153	877-149
54LS154	864-2
54LS155	863-89
54LS156	863-58
54LS157	879-18
54LS158	878-103
54LS160A	860-171
54LS161A	858-162
54LS162A	861-21
54LS163A	859-16
54LS164	882-15
54LS164	3856-57
54LS164B	882-16
54LS168A	861-103
54LS169A	859-147
54LS170	3830-89
54LS173	866-20
54LS174	866-60
54LS175	864-292
54LS181	855-63
54LS190	861-178
54LS191	860-3
54LS192	861-146
54LS193	860-46
54LS194A	881-143
54LS195A	3854-105
54LS197	858-107
54LS20	870-23
54LS21	868-170
54LS221	880-137
54LS240	883-170
54LS241	884-48
54LS242	883-84
54LS243	883-85
54LS244	884-93
54LS245	885-116
54LS251	880-66
54LS253	878-55
54LS256	878-143
54LS257A	879-57
54LS258A	878-144
54LS259	875-148
54LS26	871-129
54LS260A	865-25
54LS261	855-127
54LS266	874-176
54LS27	865-63
54LS273	866-158
54LS279	875-89
54LS28	874-37
54LS283	856-58
54LS290	860-92
54LS293	859-82
54LS295B	881-20
54LS298	879-115
54LS30	872-36
54LS301	3832-75
54LS32	873-62
54LS33	865-84
54LS352	878-29
54LS353	877-112
54LS363	876-22
54LS364	866-104
54LS365A	857-30
54LS366A	858-40
54LS367A	857-31
54LS368A	858-41
54LS37	871-74
54LS373	876-23
54LS374	867-20
54LS375	875-53
54LS377	867-47
54LS378	866-90
54LS38	871-112
54LS390	861-51
54LS393	859-39
54LS395A	881-109
54LS40	870-67
54LS42	862-143
54LS445	862-85
54LS490	861-52
54LS51	872-102
54LS54	872-179
54LS540	2882-60
54LS541	884-49
54LS620	886-104
54LS621	886-60
54LS622	886-61
54LS623	886-105
54LS640	885-18
54LS641	885-51
54LS641	2889-57
54LS642	2889-58
54LS645	885-117
54LS670	877-27
54LS670	3830-102
54LS73	868-13
54LS74A	864-247
54LS75	875-54
54LS76	868-39
54LS764	2892-100
54LS83A	856-59
54LS85	854-64
54LS86	874-132
54LS90	860-93
54LS92	862-26
54LS93	859-83
54LS95B	881-83
54LS96	881-159
54LS96	3855-49
54S00	871-43
54S02	874-47
54S03	871-197
54S04	857-133
54S05	857-179
54S08	869-128
54S10	870-160
54S11	869-43
54S112	868-108
54S113	868-71
54S13	887-129
54S133	872-68
54S134	872-50
54S135	874-55
54S138	863-135
54S139	863-34
54S140	864-13
54S140	2883-33
54S151	880-13
54S153	877-157
54S157	879-28
54S158	878-111
54S168A	861-104
54S169A	859-153
54S172	877-31
54S174	866-69
54S175	864-301
54S181	855-75
54S182	855-117
54S189	3831-77
54S195	881-59
54S20	870-31
54S240	883-171
54S241	884-55
54S242	883-86
54S243	883-87
54S244	884-96
54S251	880-67
54S253	878-64
54S257	879-65
54S258	878-153
54S260	865-30
54S273	866-163
54S280	889-37
54S301	3832-76
54S32	873-71
54S350	843-126
54S37	871-78
54S373	876-36
54S374	867-32
54S38	871-116
54S40	870-75
54S51	872-111
54S534	866-138
54S64	873-11
54S65	873-19
54S74	864-255
54S85	854-76
54S86	874-141
7400	★ 1156 870-190
7402	★ 1156 865-96
7403	★ 1156 871-144
7404	★ 1156 857-81
7405	★ 1156 857-143
7406	★ 1156 864-112
7407	★ 1156 864-92
7408	★ 1156 869-77
7410	★ 1156 870-115
74107	★ 1156 867-163
74109	★ 1156 867-107
7411	★ 1156 869-2
74116	★ 1156 875-29
74121	★ 1157 880-99
74123	★ 1157 880-147
74125	★ 1157 856-96
74126	★ 1157 856-121
74128	★ 1157 864-67 ★ 1157 2884-3
7413	★ 1156 887-104
74132	★ 1157 887-150
7414	★ 1156 888-28
74145	★ 1157 862-103
74147	★ 1157 889-46
74148	★ 1157 888-148
74150	★ 1157 880-81
74151	★ 1157 879-159
74153	★ 1157 877-124
74154	★ 1157 863-177
74155	★ 1157 863-75
74156	★ 1157 863-44
74157	★ 1157 878-171
74158	★ 1157 878-79
7416	★ 1156 864-103
74160	★ 1157 860-145
74161	★ 1157 858-131
74163	★ 1157 858-178
74164	★ 1157 881-173 ★ 1157 3856-58
74165	★ 1157 882-49 ★ 1157 3855-116
74166	★ 1157 882-66 ★ 1157 3856-10
7417	★ 1156 864-83
74170	★ 1157 877-2
74173	★ 1157 866-8
74174	★ 1157 866-31
74175	★ 1157 864-266
74180	★ 1157 889-9
74181	★ 1157 855-24
74190	★ 1157 861-155
74191	★ 1157 859-163
74192	★ 1157 861-123
74193	★ 1157 860-23
74194	★ 1157 881-125 ★ 1157 3854-63
74195	★ 1157 881-35 ★ 1157 3854-106
74199	★ 1157 882-34 ★ 1157 3855-84
7420	★ 1156 869-173
7421	★ 1156 868-142
74221	★ 1157 880-127
7425	★ 1156 865-9
7426	★ 1156 864-43
7427	★ 1156 865-40
74279	★ 1158 875-76
7428	★ 1156 865-97
74298	★ 1158 879-79
7430	★ 1156 872-7
7432	★ 1156 873-27
7433	★ 1156 865-69
74365	★ 1158 856-164
74366	★ 1158 858-2 864-121
74367	★ 1158 856-165 864-122
74368	★ 1158 858-3
7437	★ 1156 871-53
7438	★ 1156 871-90
7439	★ 1156 871-91
7440	★ 1156 870-41
7442	★ 1156 862-129
7445	★ 1156 862-94
7450	★ 1156 872-121
7451	★ 1156 872-81
7473	★ 1156 867-164
7474	★ 1156 864-213
7475	★ 1156 875-38
7476	★ 1156 868-28
7483	★ 1156 856-27
7485	★ 1156 854-65
7486	★ 1156 874-99
7490	★ 1156 860-66
7491	★ 1156 3856-74
7492	★ 1156 862-12
7493	★ 1156 859-55
7494	★ 1156 881-117 ★ 1156 3855-28
7495A	★ 1156 3854-64
7496	★ 1156 881-157 ★ 1156 3855-50
74F00	★ 1156 871-16

¶ Indicates page number in Application Note Directory.
★ Indicates additional data is provided on the page noted.

Signetics (Cont'd)

Device	Page-Line
74F02	★ 1156 874-17
74F04	★ 1156 857-107
74F08	★ 1156 869-101
74F10	★ 1156 870-134
74F109	★ 1156 867-123
74F11	★ 1156 869-19
74F112	★ 1156 868-85
74F113	★ 1156 868-53
74F114	★ 1156 868-119
74F1240	★ 1160 883-147
74F1241	★ 1160 884-29
74F1242	★ 1160 883-67
74F1243	★ 1160 883-68
74F1244	★ 1160 884-82
74F1245	★ 1160 885-97
74F125	★ 1157 856-100
74F126	★ 1157 856-125
74F13	★ 1156 887-111
74F132	★ 1157 887-157
74F138	★ 1157 863-112
74F139	★ 1157 863-11
74F14	★ 1156 888-35
74F148	★ 1157 888-153
74F151	★ 1157 879-171
74F153	★ 1157 877-137
74F157	★ 1157 879-6
74F158	★ 1157 878-91
74F160A	★ 1157 860-160
74F161A	★ 1157
74F161A	★ 1181 858-150
74F162A	★ 1157
74F162A	★ 1181 861-10
74F163A	★ 1157
74F163A	★ 1181 859-5
74F164	882-3
74F165	882-53
74F166	★ 1157 882-70
74F168	★ 1157 861-90
74F169	★ 1157 859-137
74F174	★ 1157 866-46
74F175	★ 1157 864-280
74F181	★ 1157 855-50
74F182	★ 1157 855-105
74F190	★ 1157 861-165
74F191	★ 1157 859-174
74F192	★ 1157 861-133
74F193	★ 1157 860-34
74F194	★ 1157 881-133
74F195	★ 1157 881-42
74F198	★ 1157 882-30
74F199	★ 1157 882-36
74F20	★ 1156 870-6
74F240	★ 1157 883-148
74F241	★ 1157 884-30
74F242	★ 1158 883-69
74F243	★ 1158 883-70
74F244	★ 1158 884-83
74F245	★ 1158 885-98
74F251	★ 1158 880-48
74F253	★ 1158 878-43
74F256	★ 1158 875-17
74F257	★ 1158 879-45
74F258	★ 1158 878-131
74F259	★ 1158 875-137
74F260	★ 1158 865-17
74F266	★ 1158
74F269	★ 1158
74F269	★ 1183 859-138
74F27	★ 1156
74F273	★ 1158 866-148
74F280A	★ 1158 889-22
74F283	★ 1158 856-36
74F298	★ 1158 879-89
74F299	★ 1158 882-132
74F30	★ 1156 872-19
74F30240	★ 1160 884-2
74F30241	★ 1160 884-58
74F30244	★ 1160 884-98
74F30245	★ 1160 885-127
74F3037	★ 1160 887-66
74F3038	★ 1160 888-19
74F3040	★ 1160 886-164
74F30640	★ 1160
74F32	★ 1156 873-49
74F322	★ 1158 882-90
74F323	★ 1158 882-133
74F350	★ 1158 843-127
74F352	★ 1158 878-20
74F353	★ 1158 877-103
74F365	857-4
74F366	★ 1158 858-15 864-126
74F367	★ 1158 857-5
74F368	★ 1158 858-16
74F37	★ 1156 871-63
74F373	★ 1158 876-5
74F374	★ 1158 867-8
74F377	★ 1158 867-39
74F378	★ 1158 866-77
74F379	★ 1158 864-324
74F38	★ 1156 871-102
74F381	★ 1158 855-51
74F382	★ 1158 855-52
74F384	★ 1158 843-47
74F385	★ 1158 854-7
74F395	★ 1158 881-103
74F398	★ 1158 879-90
74F399	★ 1158 879-91
74F40	★ 1156 870-50
74F412	★ 1158 876-6
74F432	★ 1158 876-7
74F445	862-84
74F455	★ 1184
74F456	★ 1184
74F51	★ 1156 872-84
74F521	★ 1159 854-105
74F524	★ 1159 854-37
74F533	★ 1159 876-68
74F534	★ 1159 866-128
74F537	★ 1159 862-152
74F538	★ 1159 863-145
74F539	★ 1159 863-66
74F540	★ 1159 883-149 ★ 1159 2882-61
74F541	★ 1159 884-31 ★ 1159 2882-27
74F543	★ 1159 886-17
74F544	★ 1159 886-18
74F545	★ 1159 885-99
74F547	★ 1159 863-97
74F548	★ 1159 863-98
74F550	★ 1159 886-19
74F551	★ 1159 886-20
74F557	★ 1159 843-37
74F558	★ 1159 843-38
74F563	★ 1159 876-69
74F564	★ 1159 866-129
74F568	★ 1159 861-76
74F569	★ 1159 861-77
74F573	★ 1159 876-8
74F579	★ 1159
74F579	★ 1186 861-78
74F583	★ 1159 854-165
74F588	884-109
74F595	882-94
74F597	★ 1159 882-81
74F598	882-82
74F604	875-109
74F605	875-110
74F620	★ 1159
74F620	★ 1188 886-99
74F621	★ 1159
74F621	★ 1190 886-54
74F622	★ 1159
74F622	★ 1190 886-55
74F623	★ 1159
74F623	★ 1188 886-100
74F630	★ 1159 2878-50
74F631	★ 1159 2878-51
74F64	★ 1156 873-6
74F640	★ 1159 885-11
74F641	★ 1159 885-46
74F641-1	★ 1159
74F641-1	★ 1159 885-47
74F642	★ 1159 884-138
74F645	★ 1159 885-100
74F646	★ 1159 886-21
74F647	885-161
74F648	★ 1159 886-22
74F649	★ 1159 885-162
74F655	★ 1159 858-54
74F656	★ 1159 857-47
74F657	★ 1159
74F657	★ 1192 885-149
74F673	★ 1159 883-23 ★ 1159 3856-107
74F674	★ 1159 883-10 ★ 1159 3856-108
74F675	★ 1159 883-20 ★ 1159 3856-109
74F676	★ 1159 883-17 ★ 1159 3856-110
74F74	★ 1156 864-229
74F764	2892-101
74F765	★ 1160
74F779	★ 1160 859-119
74F784	★ 1160 843-42
74F821	★ 1160 867-71
74F822	★ 1160 867-64
74F823	★ 1160 867-63
74F824	★ 1160 867-59
74F825	★ 1160 867-57
74F826	★ 1160 867-53
74F827	★ 1160 857-72
74F828	★ 1160 858-72
74F841	★ 1160 876-122
74F842	★ 1160 876-117
74F843	★ 1160 876-102
74F844	★ 1160 876-96
74F845	★ 1160 876-84
74F846	★ 1160 876-41
74F85	★ 1156 854-74
74F86	★ 1156 874-113
74F861	★ 1160 886-124
74F862	★ 1160 886-125
74F881	★ 1160 855-53
74F882	★ 1160 855-106
74FXX	¶ 359-6
74HC00	★ 1156 825-63
74HC02	★ 1156 827-135
74HC03	★ 1156 825-122
74HC04	★ 1156 811-17
74HC08	★ 1156 824-67
74HC10	★ 1156 825-1
74HC107	★ 1156 823-134
74HC109	★ 1156 823-14
74HC11	★ 1156 824-15
74HC112	★ 1156 823-86
74HC123	★ 1157 834-77
74HC125	★ 1157 808-87
74HC126	★ 1157 808-88
74HC132	★ 1157 838-155
74HC137	★ 1157 818-118
74HC138	★ 1157 818-28
74HC139	★ 1157 817-120
74HC14	★ 1156 839-27
74HC147	★ 1157 819-50
74HC151	★ 1157 833-43
74HC153	★ 1157 833-86
74HC154	★ 1157 819-30
74HC157	★ 1157 832-76
74HC158	★ 1157 832-112
74HC160	★ 1157 832-113
74HC161	★ 1157 811-190
74HC162	★ 1157 814-130
74HC163	★ 1157 811-136
74HC164	★ 1157 836-49
74HC165	★ 1157 836-7
74HC166	★ 1157 836-8
74HC173	★ 1157 820-148
74HC174	821-14
74HC175	★ 1157 820-103
74HC181	★ 1157 806-167
74HC182	★ 1157 806-89
74HC190	★ 1157 815-84
74HC191	★ 1157 812-69
74HC192	★ 1157 815-42
74HC193	★ 1157 812-70
74HC194	★ 1157 835-40
74HC195	★ 1157 835-105
74HC198	★ 1157 835-156
74HC20	★ 1156 824-132
74HC21	★ 1156 823-166
74HC221	834-34
74HC227	★ 1157 817-175
74HC238	★ 1157 818-29
74HC240	★ 1157 839-89
74HC241	★ 1157 839-162
74HC242	★ 1158 838-95
74HC243	★ 1158 838-126
74HC244	★ 1158 840-84
74HC245	★ 1158 841-135
74HC251	★ 1158 833-87
74HC253	★ 1158 832-14
74HC257	★ 1158 832-148
74HC258	★ 1158 832-174
74HC259	★ 1158 830-186
74HC266	★ 1158 828-106
74HC27	★ 1156 827-72
74HC273	★ 1158 821-72
74HC280	★ 1158 808-45
74HC283	★ 1158 806-49
74HC297	★ 1158 3375-20
74HC299	★ 1158 836-159
74HC30	★ 1156 825-161
74HC32	★ 1156 826-143
74HC354	★ 1158 833-123
74HC356	★ 1158 833-124
74HC365	★ 1158 809-140
74HC366	★ 1158 810-13
74HC367	★ 1158 809-141
74HC368	★ 1158 810-14
74HC373	★ 1158 829-145
74HC374	★ 1158 822-85
74HC377	★ 1158 821-111
74HC384	807-91
74HC390	★ 1158 815-155
74HC393	★ 1158 812-184
74HC4002	★ 1160 827-20
74HC40102	★ 1160 815-88
74HC40103	★ 1161 813-74

Arranged alphanumerically from left to right.

ADVERTISERS' PRODUCT INDEX

Signetics (Cont'd)

Device	Page-Line
74HC40104	★ 1161 835-59
74HC40105	★ 1161 831-49
74HC4015	★ 1160 834-154
74HC4016	★ 1160 2824-66
74HC4017	★ 1160 814-81
74HC4020	★ 1160 813-175
74HC4024	★ 1160 813-43
74HC4040	★ 1160 813-133
74HC4046	837-108
74HC4046A	★ 1160 3375-56
74HC4049	★ 1160 809-29
74HC4050	★ 1160 809-73
74HC4051	★ 1160 842-87
74HC4052	★ 1160 838-58
74HC4053	★ 1160 838-65
74HC4059	★ 1160 816-55
74HC4060	★ 1160 814-20
74HC4066	★ 1160 2824-22
74HC4067	★ 1160
74HC4075	★ 1161 826-98
74HC4094	★ 1161 835-160
74HC42	★ 1156 817-21
74HC423	★ 1158 834-35
74HC4316	★ 1161
74HC4351	★ 1161
74HC4352	★ 1161
74HC4353	★ 1161
74HC4510	★ 1161 815-122
74HC4511	★ 1161 819-141
74HC4514	★ 1161 818-168
74HC4515	★ 1161 818-169
74HC4516	★ 1161 812-71
74HC4518	★ 1161 815-177
74HC4520	★ 1161 812-148
74HC4538	★ 1161 834-36
74HC4543	★ 1161 819-90
74HC533	★ 1159 830-70
74HC534	★ 1159 821-170
74HC540	★ 1159 810-72
74HC541	★ 1159 810-73
74HC563	★ 1159 830-71
74HC564	★ 1159 821-171
74HC573	★ 1159 829-146
74HC574	★ 1159 822-86
74HC58	★ 1156 827-21
74HC583	★ 1159 806-3
74HC597	★ 1159 836-26
74HC640	★ 1159 841-72
74HC643	★ 1159 842-1
74HC646	★ 1159 840-167
74HC647	★ 1159 841-20
74HC648	★ 1159 840-121
74HC670	★ 1159 831-69
74HC688	806-110
74HC7030	★ 1161 3809-17
74HC7046	★ 1161 3375-57
74HC73	★ 1156 823-135
74HC74	★ 1156 820-32
74HC75	★ 1156 830-150
74HC7597	★ 1161
74HC85	★ 1156 807-45
74HC86	★ 1156 828-42
74HC93	★ 1156 813-5
74HCT00	★ 1156 825-79
74HCT02	★ 1156 827-149
74HCT03	★ 1156 825-126
74HCT04	★ 1156 811-48
74HCT08	★ 1156 824-79
74HCT10	★ 1156 825-13
74HCT107	★ 1156 823-151
74HCT109	★ 1156 823-30
74HCT11	★ 1156 824-24
74HCT112	★ 1156 823-96
74HCT123	★ 1157 834-82
74HCT125	★ 1157 808-100
74HCT126	★ 1157 808-101
74HCT132	★ 1157 838-161
74HCT137	★ 1157 818-138
74HCT138	★ 1157 818-58
74HCT139	★ 1157 817-147
74HCT14	★ 1156 839-35
74HCT147	★ 1157 819-56
74HCT151	★ 1157 833-50
74HCT153	★ 1157 833-95
74HCT154	★ 1157 819-37
74HCT157	★ 1157 832-90
74HCT158	★ 1157 832-125
74HCT160	★ 1157 832-126
74HCT161	★ 1157 812-13
74HCT162	★ 1157 814-140
74HCT163	★ 1157 811-150
74HCT164	★ 1157 836-61
74HCT165	★ 1157 836-17
74HCT166	★ 1157 836-18
74HCT173	★ 1157 820-156
74HCT174	821-27
74HCT175	★ 1157 820-114
74HCT181	★ 1157 806-175
74HCT182	★ 1157 806-94
74HCT190	★ 1157 815-85
74HCT191	★ 1157 812-86
74HCT192	★ 1157 815-51
74HCT193	★ 1157 812-87
74HCT194	★ 1157 835-48
74HCT195	★ 1157 835-112
74HCT198	★ 1157 835-157
74HCT20	★ 1156 824-140
74HCT21	★ 1156 823-174
74HCT221	834-50
74HCT227	★ 1157 817-176
74HCT238	★ 1157 818-59
74HCT240	★ 1157 839-118
74HCT241	★ 1157 840-19
74HCT242	★ 1158 838-108
74HCT243	★ 1158 838-132
74HCT244	★ 1158 840-20
74HCT245	★ 1158 841-170
74HCT251	★ 1158 833-96
74HCT253	★ 1158 832-18
74HCT257	★ 1158 832-157
74HCT258	★ 1158 832-182
74HCT259	★ 1158 831-5
74HCT27	★ 1156 827-81
74HCT273	★ 1158 821-86
74HCT280	★ 1158 808-49
74HCT283	★ 1158 806-55
74HCT297	★ 1158 3375-21
74HCT299	★ 1158 836-168
74HCT30	★ 1156 825-169
74HCT32	★ 1156 826-152
74HCT354	★ 1158 833-142
74HCT356	★ 1158 833-143
74HCT365	★ 1158 809-158
74HCT366	★ 1158 810-29
74HCT367	★ 1158 809-159
74HCT368	★ 1158 810-30
74HCT373	★ 1158 829-190
74HCT374	★ 1158 822-131
74HCT377	★ 1158 821-121
74HCT384	843-48
74HCT390	★ 1158 815-161
74HCT393	★ 1158 812-191
74HCT4002	★ 1160 827-29
74HCT40102	★ 1161 815-91
74HCT40103	★ 1160 813-77
74HCT40104	★ 1161 835-62
74HCT40105	★ 1161 831-52
74HCT4015	★ 1160 834-157
74HCT4016	★ 1160
74HCT4017	★ 1160 814-87
74HCT4020	★ 1160 813-181
74HCT4024	★ 1160 813-50
74HCT4040	★ 1160 813-139
74HCT4046	★ 1160 837-111
	★ 1160 3375-58
74HCT4049	809-31
74HCT4050	809-75
74HCT4051	★ 1160 842-89
74HCT4052	★ 1160 838-60
74HCT4053	★ 1160 838-67
74HCT4059	★ 1160 816-58
74HCT4060	★ 1160 814-26
74HCT4066	★ 1160
74HCT4067	★ 1160
74HCT4075	★ 1161 826-105
74HCT4094	★ 1161 835-164
74HCT42	★ 1156 817-30
74HCT423	★ 1158 834-51
74HCT4316	★ 1161
74HCT4351	★ 1161
74HCT4352	★ 1161
74HCT4353	★ 1161
74HCT4510	★ 1161
74HCT4511	★ 1161 819-146
74HCT4514	★ 1161 818-175
74HCT4515	★ 1161 818-176
74HCT4516	★ 1161 812-88
74HCT4518	★ 1161 815-181
74HCT4520	★ 1161 812-151
74HCT4538	★ 1161 834-52
74HCT4543	★ 1161 819-95
74HCT533	★ 1159 830-109
74HCT534	★ 1159 822-9
74HCT540	★ 1159 810-117
74HCT541	★ 1159 810-118
74HCT563	★ 1159 830-110
74HCT564	★ 1159 822-10
74HCT573	★ 1159 829-191
74HCT574	★ 1159 822-132
74HCT58	★ 1156 827-30
74HCT583	★ 1159 806-6
74HCT597	★ 1159 836-31
74HCT640	★ 1159 841-91
74HCT643	★ 1159 842-12
74HCT646	★ 1159 840-184
74HCT647	★ 1159 841-21
74HCT648	★ 1159 840-137
74HCT670	★ 1159 831-74
74HCT688	806-117
74HCT7030	★ 1161 3809-18
74HCT7046	★ 1161 3375-59
74HCT73	★ 1156 823-152
74HCT74	★ 1156 820-45
74HCT75	★ 1156 830-159
74HCT7597	★ 1161
74HCT85	★ 1156 807-53
74HCT86	★ 1156 828-54
74HCT93	★ 1156 813-9
74HCU04	811-88
74LS00	★ 1156 871-35
74LS01	★ 1156 871-187
74LS02	★ 1156 874-38
74LS04	★ 1156 857-125
74LS05	★ 1156 857-172
74LS08	★ 1156 869-120
74LS09	★ 1156 869-159
74LS10	★ 1156 870-152
74LS107	★ 1156 868-14
74LS109	★ 1156 867-136
74LS11	★ 1156 869-36
74LS112	★ 1156 868-101
74LS113	★ 1156 868-65
74LS125A	★ 1157 856-113
74LS126A	★ 1157 856-137
74LS13	★ 1156 887-125
74LS132	★ 1157 888-9
74LS136	★ 1157 874-82
74LS138	★ 1157 863-126
74LS139	★ 1157 863-26
74LS14	★ 1156 888-48
74LS151	★ 1157 880-4
74LS153	★ 1157 877-150
74LS154	★ 1157 864-3
74LS155	★ 1157 863-90
74LS156	★ 1157 863-59
74LS157	★ 1157 879-19
74LS158	★ 1157 878-104
74LS160A	★ 1157 860-172
74LS161A	★ 1157 858-163
74LS162A	★ 1157 861-22
74LS163A	★ 1157 859-17
74LS164	★ 1157 882-17
	★ 1157 3856-59
74LS168A	★ 1157 861-105
74LS169A	★ 1157 859-148
74LS170	★ 1157 877-15
	★ 1157 3830-90
74LS173	★ 1157
74LS173	★ 1158 866-21
74LS174	★ 1157 866-61
74LS175	864-293
74LS181	★ 1157 855-64
74LS191	★ 1157 860-4
74LS192	★ 1157 861-147
74LS193	★ 1157 860-47
74LS194A	★ 1157 881-144
74LS195A	★ 1157 881-53
	★ 1157 3854-107
74LS197	★ 1157 858-108
74LS20	★ 1156 870-24
74LS21	★ 1156 868-171
74LS240	★ 1157 883-164
	★ 1157 2882-62
74LS241	★ 1157 884-50
	★ 1157 2882-28
74LS242	★ 1158 883-88
	★ 1158 2888-45
74LS243	★ 1158 883-89
	★ 1158 2888-46
74LS244	★ 1158 2882-29
74LS245	★ 1158 885-118
	★ 1158 2891-1
74LS251	★ 1158 880-60
74LS253	★ 1158 878-56
74LS256	★ 1158 875-24
74LS257A	★ 1158 879-58
74LS258A	★ 1158 878-145
74LS259	★ 1158 875-149
74LS26	★ 1156 871-130
74LS260	★ 1158 865-26
74LS266	★ 1158 865-88
74LS27	★ 1156 865-64
74LS273	866-159
74LS283	★ 1158 856-60
74LS290	★ 1158 860-94
74LS293	★ 1158 859-84
74LS295B	★ 1158 881-21

¶ Indicates page number in Application Note Directory.
★ Indicates additional data is provided on the page noted.

Signetics (Cont'd)

Device	Page-Line
74LS298	★ 1158
	879-116
74LS30	★ 1156
	872-37
74LS301	★ 4166
	3832-54
74LS32	★ 1156
	873-63
74LS33	★ 1156
	865-85
74LS352	★ 1158
	878-30
74LS353	★ 1158
	877-113
74LS363	★ 1158
	876-24
74LS364	★ 1158
	866-105
74LS365A	★ 1158
	857-32
74LS366A	★ 1158
	858-42
74LS367A	★ 1158
	857-33
74LS368A	★ 1158
	858-43
74LS37	★ 1156
	871-75
74LS373	★ 1158
	876-25
74LS374	★ 1158
	867-21
74LS375	★ 1158
	875-55
74LS377	★ 1158
	867-48
74LS378	★ 1158
	866-91
74LS38	★ 1156
	871-113
74LS390	★ 1158
	861-53
74LS393	★ 1158
	859-40
74LS395A	★ 1158
	881-110
74LS40	★ 1156
	870-68
74LS42	★ 1156
	862-144
74LS445	★ 1158
	862-86
74LS490	★ 1159
	861-54
74LS51	★ 1156
	872-103
74LS54	★ 1156
	872-180
74LS540	★ 1159
	883-165
	★ 1159
	2882-63
74LS541	★ 1159
	884-51
	★ 1159
	2882-30
74LS568A	★ 1159
	861-79
74LS569A	★ 1159
	860-14
74LS620	★ 1159
	886-106
74LS621	★ 1159
	886-62
74LS622	★ 1159
	886-63
74LS623	★ 1159
	886-107
74LS640	★ 1159
	885-19
	★ 1159
	2890-30
74LS640-1	★ 1159
	2890-31
74LS641	★ 1159
	885-52
	★ 1159
	2889-59
74LS641-1	★ 1159
	885-53
	★ 1159
	2889-60
74LS642	★ 1159
	884-146
	★ 1159
	2889-61
74LS642-1	★ 1159
	884-147
	★ 1159
	2889-62
74LS645	★ 1159
	885-119
	★ 1159
	2890-32
74LS645-1	★ 1159
	885-120
74LS670	877-28
74LS670	3830-103
74LS674	¶ 431-17
74LS73	★ 1156
	868-15
74LS74A	★ 1156
	864-248
74LS75	★ 1156
	875-56
74LS76	★ 1156
	868-40
74LS764	★ 1160
	2892-102
74LS765	¶ 431-17
74LS83A	★ 1156
	856-61
74LS85	★ 1156
	854-66
74LS86	★ 1156
	874-133
74LS90	★ 1156
	860-95
74LS92	★ 1156
	862-27
74LS93	★ 1156
	859-85
74LS95B	★ 1156
	881-84
	★ 1156
	3854-65
74LS96	★ 1156
	881-160
	★ 1156
	3855-51
74LSXX	¶ 359-6
74S00	★ 1156
	871-44
74S02	★ 1156
	874-48
74S03	★ 1156
	871-198
74S04	★ 1156
	857-134
74S05	★ 1156
	857-180
74S08	★ 1156
	869-129
74S10	★ 1156
	870-161
74S11	★ 1156
	869-44
74S112	★ 1156
	868-109
74S113	★ 1156
	868-72
74S133	★ 1157
	872-69
74S134	★ 1157
	872-51
74S135	★ 1157
	874-56
74S138	★ 1157
	863-136
74S139	★ 1157
	863-35
74S140	★ 1157
	864-14
	★ 1157
	2883-34
74S151	★ 1157
	880-14
74S153	★ 1157
	877-158
74S157	★ 1157
	879-29
74S158	★ 1157
	878-112
74S168A	★ 1157
	861-106
74S169A	★ 1157
	859-154
74S172	★ 1157
	877-32
	★ 1157
	3830-113
74S174	★ 1157
	866-70
74S175	864-302
74S181	★ 1157
	855-76
74S182	★ 1157
	855-118
74S189	★ 4166
	3831-56
74S194	★ 1157
	3854-119
74S195	★ 1157
	881-60
	★ 1157
	3854-120
74S20	★ 1156
	870-32
74S225	★ 1157
	877-72
74S240	★ 1157
	883-172
74S241	★ 1157
	884-56
74S242	★ 1158
	883-90
74S243	★ 1158
	883-91
74S244	★ 1158
	884-97
74S251	★ 1158
	880-68
74S253	★ 1158
	878-65
74S257	★ 1158
	879-66
74S258	★ 1158
	878-154
74S260	★ 1158
	865-31
74S273	★ 1158
	866-164
74S280	★ 1158
	889-38
74S301	★ 4166
	3832-63
74S32	★ 1156
	873-72
74S350	★ 1158
	843-128
74S37	★ 1156
	871-79
74S373	★ 1158
	876-37
74S374	★ 1158
	867-33
74S38	★ 1156
	871-117
74S40	★ 1156
	870-76
74S51	★ 1156
	872-112
74S534	866-139
74S64	★ 1156
	873-12
74S74	★ 1156
	864-256
74S85	★ 1156
	854-77
74S86	★ 1156
	874-142
74SXX	¶ 359-6
8021	1429-35
8035	1429-36
8039	1429-37
8040	1429-38
8048	1429-39
8049	1429-40
8050	1429-41
82HS187	★ 4172
82HS195	★ 4169
82HS321	★ 4170
82HS641	★ 4171
82S102	¶ 445-2
82S103	¶ 445-2
82S105	¶ 399-13
82S212	★ 4168
8881	2877-89
8891	2876-133
8A1200	4455-16
8A1200	4455-18
	¶ 357-8
8A1260	4455-17
8A1260	4455-19
	¶ 357-8
8A1542	4455-22
8A1542	4455-23
	¶ 357-8
8A1664	4455-24
8A1664	4455-25
8A1864	4455-27
8A1864	4455-28
8A2176	4455-31
8A2176	4455-32
8T26A	¶ 373-8
8T28	¶ 373-8
8T95	¶ 373-8
8X01A	2878-7
8X02	¶ 375-18
8X02	¶ 377-12
8X300	★ 1742
	1429-42
	¶ 381-7
8X300KT100SK	2013-36
8X305	1429-43
	¶ 382-17
8X330	¶ 379-3
8X60	★ 4174
	3810-59
A723	★ 3724
ACE1320	★ 4747
	4455-26
ACE1320M	★ 4747
	4455-14
ACE1400	4455-20
ACE14LP00	★ 4747
	4455-30
ACE14T00	★ 4747
	4455-29
ACE2200	4455-33
ACE22LP00	★ 4747
	4455-35
ACE22T00	★ 4747
	4455-34
ACE30T00	★ 4747
	4455-21
ACE600	4455-6
ACE6LP00	★ 4747
	4455-9
ACE6T00	★ 4747
	4455-8
ACE900	4455-11
ACE9LP00	★ 4747
	4455-13
ACE9T00	★ 4747
ACE9T04	4455-12
ADC0801	★ 3686
ADC0801	★ 3725
	2833-20
ADC0801C	★ 3686
ADC0801C	★ 3725
	2833-21
ADC0802	★ 3686
ADC0802	★ 3725
	2835-34
ADC0802C	★ 3686
ADC0802C	★ 3725
	2835-35
ADC0803C	★ 3686
ADC0803C	★ 3721
	2835-36
ADC0804C	★ 3686
ADC0804C	★ 3721
	2837-15
ADC0805C	★ 3686
ADC0805C	★ 3721
	2837-17
AM26LS29	2881-38
AM26LS30	2881-51
AM26LS30	2883-57
AM26LS31	2884-21
AM6012	★ 3720
AM6012	★ 3725
	2868-26
CA3089	★ 3723
CA3089	★ 3727
	3322-33
CA3089D2	3322-34
CCL	★ 4747
CCL-1	4455-5
CCL-2	4455-7
DAC-08	2852-15
DAC-08A	2851-9
DAC-08C	2854-37
DAC-08E	2852-29
DAC-08H	2851-10
DAC08	★ 3720
DAC8001	2862-22
DAC800V	★ 3689
DAC800V	★ 3725
	2862-23
DS8880	2877-17
EPL-1	4481-21
EPL-2	4481-22
HCT4510	815-125
HEF4000B	827-2
HEF4001B	827-174
HEF4001UB	827-175
HEF4002B	827-50
HEF4006B	836-190
HEF4007UB	810-168
HEF4008B	806-68
HEF40097B	809-176
HEF40098B	811-98
HEF40106B	839-49
HEF4011B	825-104
HEF4011UB	825-105
HEF4012B	824-160
HEF4013B	820-65
HEF4014B	836-134
HEF4015B	835-2
HEF4016	2824-67
HEF40160B	815-19
HEF40161B	812-30
HEF40162B	814-153
HEF40163B	811-166
HEF4016B	2824-68
HEF40174B	821-41
HEF40175B	820-125
HEF4017B	814-102
HEF4018B	816-109
HEF40192B	815-72
HEF40193B	812-106
HEF40194B	835-80
HEF40195B	835-117
HEF4019B	826-15
HEF4020B	814-3
HEF4021B	835-131
HEF4022B	816-84
HEF4023B	825-34
HEF40240B	839-136
HEF40244B	840-44
HEF40245B	841-187
HEF4024B	813-65
HEF4025B	827-103
HEF4027B	823-48
HEF4028B	817-44
HEF4029B	816-128
HEF4030B	828-79
HEF4031B	837-22
HEF4035B	835-81
HEF40373B	830-25
HEF40374B	822-158
HEF4040B	813-153
HEF4041B	808-118
HEF4042B	829-46
HEF4043B	829-83
HEF4044B	829-65
HEF4046B	837-124
HEF4047B	833-178
HEF4049B	809-44
HEF4050B	809-89
HEF4051B	2830-135
HEF4051BD	2830-136
HEF4052B	2830-137
HEF4052BD	2830-138
HEF4053B	2826-64
HEF4053BD	2826-65
HEF4059B	816-61
HEF4060B	814-36
HEF4066B	2824-23
HEF4066BD	2824-24
HEF4067B	2831-68
HEF4067BD	2831-69
HEF4068B	825-179
HEF4069UB	811-68
HEF4070B	828-80
HEF4071B	826-168
HEF4072B	826-81
HEF4073B	824-37
HEF4075B	826-118
HEF4076B	820-169
HEF4077B	828-124
HEF4078B	828-10
HEF4081B	824-95
HEF4082B	823-186
HEF4085B	826-37
HEF4086B	826-64
HEF4093B	838-173
HEF4094B	835-171
HEF4104B	837-39
HEF4502B	809-13
HEF4505	3832-14
HEF4505B	831-112
HEF4508B	829-11
HEF4510B	815-73
HEF4511B	819-163
HEF4511B	2875-162
HEF4511BD	2875-163
HEF4512B	833-68
HEF4514B	818-198
HEF4515B	818-199
HEF4516B	812-107
HEF4517B	835-17
HEF4518B	816-1
HEF4519B	833-22
HEF4520B	812-166
HEF4521B	834-138
HEF4522B	815-103
HEF4526B	812-130
HEF4527B	838-43
HEF4528B	834-93
HEF4531B	842-109
HEF4532B	842-80
HEF4534B	816-69
HEF4538B	834-64
HEF4539B	832-7
HEF4541B	834-111
HEF4543B	819-101
HEF4555B	817-66
HEF4556B	817-80
HEF4557B	837-27
HEF4585B	807-65
HEF4720B	831-123
HEF4720V	831-124
HEF4724B	831-25
HEF4731B	835-25
HEF4731V	835-26
HEF4737	816-44
HEF4738	1455-27
HEF4738	1467-97
HEF4750	3375-131
HEF4751	891-66
HEF4752V	★ 3730
	2895-67
HEF9754V	2874-1
INTER	4481-24
INTER	4481-25
ISL	4481-23
LF198	★ 3725
	3404-75
LF298	★ 3725
	3404-76
LF398	★ 3725
	3404-77
LM111	★ 3725
	3312-48
LM119	★ 3723
	3314-17
LM124	★ 3729
	3334-161
LM13600	3366-30
LM13600A	3363-37
LM139A	★ 3725
	3316-9
LM158	★ 3729
	3334-124
	3365-36
LM1870	★ 3727
	3322-135
LM193	★ 3725
	3314-28
LM193A	★ 3725
	3313-50

Arranged alphanumerically from left to right.

ADVERTISERS' PRODUCT INDEX

Signetics (Cont'd)

Device	Page-Line
LM211	★ 3725
	3312-49
LM219	★ 3725
	3314-18
LM224	★ 3729
	3334-162
LM239A	★ 3725
	3316-33
LM258	★ 3729
	3334-125
	3365-37
LM2901	★ 3721
LM2901	★ 3722
	3316-45
LM2903	★ 3725
	3314-52
LM293	3314-41
LM293A	3314-42
LM311	★ 3721
	3313-20
LM319	★ 3723
	3315-8
LM324	★ 3721
	3334-163
LM339	★ 3721
LM339	★ 3725
	3316-34
LM358	★ 3722
LM358	★ 3729
	3334-134
LM393A	★ 3722
	3314-43
MAB84	★ 3731
MAB84	★ 3733
MB561	3320-66
MB562	3320-67
MC1408-7	★ 3720
	2854-24
MC1408-8	★ 3720
	2853-7
MC1458	★ 3720
MC1458	★ 3729
	3330-9
	3367-20
MC1488	★ 3720
	2881-47
MC1489	★ 3720
MC1489	★ 3726
	2885-24
MC1489A	★ 3720
MC1489A	★ 3726
	2885-32
MC1496	★ 3722
	3398-82
MC1508-8	2853-8
MC1558	★ 3729
	3366-21
MC1596	3398-83
MC3302	★ 3721
	3316-55
MC3303	★ 3729
	3373-8
MC3403	★ 3721
MC3403	★ 3729
	3373-42
MC3410	★ 3725
	2860-4
MC3410C	★ 3725
	2858-24
MC3503	★ 3729
	3371-52
MC3510	★ 3725
	2858-7
MEA8000	★ 3700
MEA8000	★ 3728
	3323-126
N25S10	843-129
N3001	887-51
	¶ 376-14
	¶ 377-4
	1448-38
	1405-2
N3002	856-14
	¶ 375-18
	¶ 376-14
	¶ 377-4
	1448-36
	1405-3
N3101A	★ 4166
	3831-50
N4066A	2824-25
N8234	★ 1175
	878-117
N8242	★ 1175
	874-160
	874-177
N8262	★ 1175
	889-10
N8266	★ 1175
	878-76
N8271	★ 1175
	881-98
	★ 1175
	3854-35
N8273	★ 1173
	883-6
	★ 1173
	3856-95
N8274	★ 1173
	883-3
N82HS1281	★ 4167
	3822-92
N82HS187	★ 4166
	3817-113
N82HS187A	★ 4166
	3817-95
N82HS189	★ 4166
	3817-114
N82HS189A	★ 4166
	3817-96
N82HS195	★ 4167
	3820-6
N82HS195A	★ 4167
	3820-3
N82HS195B	★ 4167
	3819-111
N82HS197	★ 4167
	3819-39
N82HS199	★ 4167
	3819-40
N82HS321	★ 4167
	3820-38
N82HS321A	★ 4167
	3820-34
N82HS321B	★ 4167
	3820-32
N82HS641	★ 4167
	3821-55
N82HS641A	★ 4167
	3821-42
N82HS641B	★ 4167
	3821-30
N82LS135	★ 4166
	3815-21
N82LS16	★ 4166
	3832-56
N82LS17	3832-55
N82LS181	★ 1175
	3817-156
N82S09	★ 4166
N82S100	4473-73
N82S101	4473-71
N82S102	4473-46
N82S103	4473-47
N82S104	4474-64
N82S104A	4474-60
N82S105	4474-65
N82S105A	4474-62
N82S115	★ 4166
	3816-40
N82S123	★ 4166
	3814-56
N82S126	★ 4166
	3814-105
N82S129	★ 4166
	3814-108
N82S130	★ 4166
	3815-40
N82S131	★ 4166
	3815-44
N82S135	★ 4166
N82S137	★ 4166
	3817-31
N82S137B	★ 4166
	3816-97
N82S141	3816-41
N82S147A	★ 4166
	3816-12
N82S150	4473-50
N82S151	4473-51
N82S152	4474-5
N82S152A	4474-3
N82S153	4474-6
N82S153A	4474-4
N82S154	4475-1
N82S155	4475-2
N82S156	4474-69
N82S157	4474-70
N82S158	4474-66
N82S159	4474-67
N82S16	★ 4166
	3832-66
N82S167	4474-52
N82S17	3832-64
N82S180	3817-127
N82S181	★ 4166
	3817-133
N82S181A	★ 4166
	3817-115
N82S181B	★ 4166
	3817-97
N82S183	★ 4166
	3817-126
N82S185	★ 4166
	3818-56
N82S185A	★ 4166
	3818-25
N82S185B	★ 4166
	3818-18
N82S19	★ 4166
	3832-20
N82S191	★ 4167
	3819-65
N82S191A	★ 4167
	3818-42
N82S21	877-70
N82S21	3832-3
N82S210	3834-18
N82S212	★ 4166
	3834-16
N82S212A	★ 4166
	3834-13
N82S23	★ 4166
	3814-51
N82S25	3831-70
N82S321	★ 4167
	3820-63
N82S41	★ 1175
	874-85
N82S42	★ 1175
N82S50	★ 1175
	862-79
N82S52	★ 1175
	862-147
N82S62	★ 1175
	889-39
N82S71	★ 1175
N82S82	★ 1175
	856-68
N82S83	★ 1175
	854-16
N8815	★ 1175
N8881	★ 1175
	871-145
N8890	★ 1175
	857-82
N8891	★ 1175
	857-83
N8T09	★ 1175
	864-18
	★ 1175
	2881-25
N8T10	★ 1175
	866-9
N8T125	★ 1175
	885-20
	★ 1175
	2891-2
N8T126	★ 1175
	888-59
	★ 1175
	2888-57
N8T127	★ 1175
	888-60
	★ 1175
	2888-58
N8T128	★ 1175
	888-73
	★ 1175
	2889-6
N8T129	★ 1175
	888-74
	★ 1175
	2889-7
N8T13	★ 1175
	2881-6
N8T15	★ 1175
	2881-15
N8T16	★ 1175
	2885-6
N8T20	★ 1175
	880-92
N8T22	★ 1175
N8T23	★ 1175
	2881-2
N8T24	★ 1175
	2885-11
N8T245	★ 1175
	885-121
N8T26A	★ 1175
	888-61
	★ 1175
	2888-59
N8T28	★ 1175
	888-75
	★ 1175
	2889-8
N8T31	888-114
N8T31	1457-456
N8T32	888-115
N8T32	1457-459
N8T33	888-116
N8T33	1457-460
N8T34	★ 1175
	2889-17
N8T3404	875-123
N8T36	888-117
N8T36	1457-451
N8T37	★ 1175
	2885-55
N8T38	★ 1175
	2888-3
N8T380	★ 1175
	887-139
N8T95	★ 1175
	857-38
	★ 1175
	1452-147
N8T96	★ 1175
	858-48
	★ 1175
	1452-148
N8T97	★ 1175
	857-39
	★ 1175
	1452-149
N8T98	★ 1175
	858-49
	★ 1175
	1452-150
N8TS805	876-26
N8TS806	866-102
N8TS807	876-76
N8TS808	866-103
N8X01A	886-157
N8X02A	887-52
N8X300	1457-443
N8X305	1457-444
N8X310	1457-471
N8X320	887-25
N8X320	1457-470
N8X330	1457-450
N8X350	★ 4166
	3834-9
	★ 4166
	1457-479
N8X353	1457-477
N8X355	1457-473
N8X360	★ 1744
	1457-475
N8X371	1457-457
N8X372	1457-461
N8X374	1457-468
N8X376	1457-452
N8X382	1457-462
N8X401	★ 1745
N8X41	★ 1193
	886-148
	★ 1193
	1465-33
	1469-85
N8X42	1457-463
N8X450	★ 1746
N8X470	★ 1747
N8X60	887-16
N8X60	2892-36
N8X60	1457-448
N9301	★ 1175
N9309	★ 1175
	878-9
N9310	★ 1175
	860-146
N9312	★ 1175
N9316	★ 1175
	858-132
N9322	★ 1175
	878-172
N9324	★ 1175
	854-67
N9334	★ 1175
	875-131
N9386	★ 1175
	874-161
N9401	886-158
N9401	2878-10
N9401	1448-7
N9403	3809-5
N9403	1448-4
N9601	★ 1175
N9602	★ 1175
	880-169
NE1012	★ 3708
NE1012	★ 3729
	3337-29
NE1037	★ 3708
NE1037	★ 3729
	3337-53
NE4558	★ 3729
	3367-26
NE5018	★ 3690
NE5018	★ 3720
NE5018	★ 3725
	2853-30
	★ 3690
	★ 3720
	★ 3725
	1469-56
NE5019	★ 3725
	2851-35
NE5020	★ 3720
NE5020	★ 3725
	2857-22
NE5030	★ 3686
NE5030	★ 3725
NE5034	★ 3687
NE5034	★ 3725
	2834-43
NE5036	★ 3725
NE5036	★ 3733
	2832-32
NE5037	★ 3687
NE5037	★ 3725
	2832-33
NE5044	★ 3712
NE5044	★ 3730
	3322-169
	3380-113
NE5045	★ 3712
NE5045	★ 3730
	3322-168
	3380-114
NE5050	★ 3698
NE5050	★ 3728
	3380-62
NE5080	★ 3697
NE5080	★ 3728
	3380-70
NE5081	★ 3697
NE5081	★ 3728
	3380-63
NE5090	★ 3726
	2894-156
NE5118	★ 3725
	2852-5
NE5119	★ 3725
	2851-23
NE5150	★ 3689
NE5150	★ 3725
NE5150	★ 3731
	2849-20
NE5151	★ 3689
NE5151	★ 3725
NE5151	★ 3731
	2849-19
NE5170	★ 3693
NE5170	★ 3726
	2881-56
NE5180	★ 3693
NE5180	★ 3726
	2886-3
NE5181	★ 3693
NE5181	★ 3726
	2886-4
NE5202	★ 3729
NE5205	★ 3711
	3308-15
NE521	★ 3691
NE521	★ 3725
	3314-54
NE522	★ 3725
	3314-56
NE5230	★ 3707
NE5230	★ 3729
NE5240	★ 3694
NE5240	★ 3727
	3316-170
NE527	★ 3691
NE527	★ 3725
	3313-7
NE529	★ 3723
	3313-8
NE530	★ 3721
	3353-23
NE531	★ 3729
	3355-56
NE532	★ 3729
	3334-126
	3366-54
NE538	★ 3729
	3353-24
NE5410	★ 3690
NE5410	★ 3722
	2858-8
NE542	★ 3727
	3319-60
NE544	★ 3712
NE544	★ 3730
	3328-9
NE5512	★ 3729
	3330-10
	3365-17
NE5514	★ 3729
	3330-11
NE5517	★ 3711
NE5517	★ 3722
NE5517	★ 3729
	3365-18
NE5517A	★ 3711
NE5517A	★ 3722
NE5517A	★ 3729
	3365-19
NE5520	★ 3725
	2896-7
NE5521	★ 3692
NE5521	★ 3725
NE5532	★ 3720
	3363-92
NE5532A	★ 3720
	3363-93
NE5533	★ 3708
NE5533	★ 3729
	3363-94
NE5533A	★ 3708
NE5533A	★ 3729
	3363-95
NE5534	★ 3708
NE5534	★ 3720
NE5534	★ 3729
	3350-47
NE5534A	★ 3708
NE5534A	★ 3720
NE5534A	★ 3729
	3350-48
NE5535	★ 3707
NE5535	★ 3729
	3366-50
NE5537	★ 3692
NE5537	★ 3720
	3404-78
NE5539	★ 3710
NE5539	★ 3729
	3334-253
	3354-32
	¶ 404-3
NE555	★ 3721
	3383-48

¶ Indicates page number in Application Note Directory.
★ Indicates additional data is provided on the page noted.

Signetics (Cont'd)

Device	Page-Line
NE556	★ 3721
	3383-87
NE556-1	★ 3721
	3383-88
NE5560	★ 3713
NE5560	★ 3730
	3396-77
NE5561	★ 3713
NE5561	★ 3730
	3396-78
NE5562	★ 3713
NE5562	★ 3730
	3396-79
NE5568	★ 3715
NE5568	★ 3730
	3396-80
NE558	★ 3720
	3383-101
NE5592	★ 3710
NE5592	★ 3729
	3308-16
NE564	★ 3728
	3375-41
NE565	★ 3722
	3376-20
NE566	★ 3723
	3376-31
NE567	★ 3720
	3376-1
	3381-117
NE568	★ 3728
NE570	★ 3706
NE570	★ 3727
	3377-162
NE571	★ 3706
NE571	★ 3727
	3377-163
NE572	★ 3706
NE572	★ 3727
	3377-164
NE587	★ 3726
	2876-13
NE589	★ 3726
	2875-169
NE590	★ 3726
	2894-1
	★ 3726
	1469-122
NE5900	★ 3702
NE5900	★ 3728
	3377-34
NE591	★ 3726
	2894-2
	★ 3726
	1469-123
NE592	★ 3722
NE592	★ 3729
	3308-17
NE594	★ 3726
	2877-39
NE602	★ 3694
NE602	★ 3727
	3398-71
NE604	★ 3695
NE604	★ 3727
	3322-35
NE612	★ 3727
NE614	★ 3727
NE645	★ 3727
	3316-171
NE646	★ 3727
	3316-172
NE648	★ 3727
	3316-173
NE649	★ 3727
	3316-174
NE650	★ 3727
	3316-175
NE660	★ 3727
	3316-176
NE670	★ 3727
	3316-177
OM200	★ 3729
	3316-101
OM8000	★ 3728
OM8001	★ 3728
OM8010	★ 3701
OM8010	★ 3728
	3323-108
OM8011	★ 3701
OM8011	★ 3728
	3323-109
PCA1122	3320-131
PCB8573	★ 3733
	1469-106
PCD3310	★ 3728
PCD3311	★ 3705
PCD3311	★ 3728
	3382-93
PCD3312	★ 3705
PCD3312	★ 3728
	3382-94
PCD3315	★ 3728
PCD3320	3378-111
PCD3321	3378-112
PCD3322	3378-113
PCD3323	3378-114
PCD3324	3378-48
PCD3325	3378-49
PCD3340	3378-38
PCD3343	★ 3728
PCD3360	★ 3728
PCD3361	★ 3728
PCD8571	★ 3731
PCD8571	★ 3733
	3832-28
PCD8572	★ 3733
PCE2100	2877-116
PCE2110	2877-118
PCE2112	2877-109
PCF1171	3319-116
PCF1171	3320-79
PCF1172	3319-117
PCF1172	3320-80
PCF1251	★ 3725
PCF1303	★ 3726
PCF2100	★ 3726
PCF2100	★ 3733
	2877-117
PCF2110	★ 3726
PCF2110	★ 3733
PCF2111	★ 3726
PCF2111	★ 3733
	2877-119
PCF2112	★ 3726
PCF2112	★ 3733
	2877-113
PCF8200	★ 3701
PCF8200	★ 3728
PCF8200	★ 3733
	3323-120
PCF8570	★ 3731
PCF8570	★ 3733
PCF8573	★ 3728
PCF8573	★ 3731
PCF8574	★ 3731
PCF8574	★ 3733
PCF8576	★ 3726
PCF8576	★ 3733
	2874-88
PCF8577	★ 3726
PCF8577	★ 3733
	2874-90
PCF8591	★ 3725
PCF8591	★ 3733
PLC105	★ 4154
PLC153	★ 4154
PLC173	★ 4154
PLC473	★ 4154
	4473-79
PLHS153	★ 4154
	4473-84
PLHS173	★ 4154
	4473-80
PLHS18P8	★ 4154
	4469-56
PLHS405	★ 4154
	4474-57
PLHS473	★ 4154
	4473-78
PLMC153	★ 4154
	4474-2
PLS100	★ 4154
	4473-69
PLS103	★ 4154
	4473-45
PLS105	★ 4154
PLS105	★ 4155
	4474-59
PLS105A	★ 4154
PLS105A	★ 4155
	4474-58
PLS151	★ 4154
PLS151	★ 4155
PLS151	★ 4156
	4473-48
PLS153	★ 4154
PLS153	★ 4157
	4473-85
	¶ 362-1
PLS153A	★ 4154
PLS153A	★ 4157
	4474-1
PLS155	★ 4154
PLS155	★ 4158
PLS157	★ 4154
PLS157	★ 4159
	4474-71
	¶ 419-7
PLS159	★ 4154
PLS159	★ 4160
	4474-68
	¶ 362-2
PLS161	★ 4154
	4473-61
PLS162	★ 4154
	4469-31
PLS163	★ 4154
	4469-30
PLS167	★ 4154
PLS167	★ 4161
	4474-54
PLS167A	★ 4154
PLS167A	★ 4161
	4474-53
PLS168	★ 4154
PLS168	★ 4162
	4474-56
PLS168A	★ 4154
PLS168A	★ 4162
	4474-55
PLS173	★ 4154
PLS173	★ 4164
	4473-81
PLS179	★ 4154
	4473-62
PM4300	★ 3728
PM4337	★ 3728
PNA7507	★ 3688
PNA7507	★ 3725
	2833-11
PNA7518	★ 3690
PNA7518	★ 3725
	2837-45
S1534	890-89
S3001	887-53
S3001	1448-39
S3002	856-15
S3002	1448-37
S3101A	3831-71
S572	★ 3727
S8202	882-166
S8233	878-173
S8234	878-118
S8241	874-64
S8242	874-178
S8250	862-78
S8262	889-11
S8266	878-77
S8270	867-77
S8270	3854-36
S8271	881-99
S8271	3854-37
S8273	883-7
S8273	3856-96
S8274	3856-92
S8280	860-115
S8281	858-93
S8284	860-52
S82HS195	3820-15
S82LS16	3832-73
S82LS17	3832-72
S82LS181	3817-157
S82S09	3832-25
S82S123	3814-62
S82S126	3814-123
S82S129	3814-124
S82S130	3815-64
S82S131	3815-68
S82S137	3817-42
S82S137A	3817-39
S82S141	3816-66
S82S150	4473-49
S82S181	3817-148
S82S181A	3817-146
S82S183	3817-149
S82S185	3818-57
S82S185A	3818-51
S82S19	3832-24
S82S191	3819-70
S82S191A	3818-52
S82S210	3834-20
S82S212	3834-19
S82S23	3814-60
S82S25	3831-98
S82S2708	3817-150
S82S30	879-146
S82S31	879-147
S82S32	879-148
S8891	857-84
S8T04	2875-96
S8T05	2875-83
S8T09	864-19
S8T09	2881-26
S8T10	866-10
S8T125	885-21
S8T125	2891-3
S8T126	888-62
S8T126	2888-60
S8T127	888-63
S8T127	2888-61
S8T128	888-76
S8T128	2889-9
S8T129	888-77
S8T129	2889-10
S8T13	2881-7
S8T16	2885-7
S8T245	885-122
S8T26A	888-64
S8T28	888-78
S8T32	888-118
S8T32	1457-464
S8T33	888-119
S8T33	1457-465
S8T35	888-120
S8T35	1457-453
S8T36	888-121
S8T36	1457-454
S8T39	888-122
S8T80	864-46
S8T90	857-144
S8T95	1452-151
S8T97	857-40
S8T97	1452-152
S8T98	858-50
S8T98	1452-153
S8TS805	876-27
S8TS806	876-28
S8X300-1	1457-445
S8X300-2	1457-446
S8X305	1457-447
S8X310	1457-472
S8X350	3834-10
S8X350	1457-480
S8X353	1457-478
S8X355	1457-474
S8X360	1457-476
S8X371	1457-458
S8X372	1457-466
S8X374	1457-469
S8X376	1457-455
S8X382	1457-467
S8X60	2892-37
S8X60	1457-449
S9309	878-10
S9314	875-72
S9334	875-132
S9386	874-162
S9401	2878-11
S9401	1448-8
S9601	880-109
S9602	880-170
SA1034	890-87
SA1458	★ 3729
	3367-43
SA1534	890-88
SA5230	★ 3707
SA532	★ 3729
	3367-56
SA534	★ 3729
	3373-5
SA5534	★ 3708
SA556	★ 3728
	3383-89
SA556-1	★ 3728
	3383-90
SA558	★ 3728
	3383-102
SA571	★ 3706
SA571	★ 3727
SA571	★ 3729
	3378-1
SA572	★ 3706
SA572	★ 3729
	3378-2
SA594	★ 3726
	2877-40
SA602	★ 3694
SA602	★ 3727
	3398-72
SA604	★ 3695
SA604	★ 3727
	3322-36
SA612	★ 3727
SA614	★ 3727
SA723C	3393-129
SA741C	★ 3729
	3355-46
SA747C	★ 3729
	3367-41
SAA1027	★ 3730
SAA1043P	★ 3731
	3326-101
SAA1044	★ 3731
SAA1057	★ 3727
SAA1057	★ 3733
	3321-118
	3375-132
SAA1060	★ 3726
SAA1060	★ 3733
	2874-116
SAA1061	★ 3726
SAA1061	★ 3733
	2874-117
SAA1062	★ 3726
	2874-65
SAA1063	★ 3726
SAA1063	★ 3733
	2876-46
SAA1099	★ 3701
SAA1099	★ 3728
	3321-1
SAA1300	★ 3731
SAA1300	★ 3733
	3328-23
SAA3004	★ 3698
SAA3004	★ 3728
	3323-8
SAA3006	★ 3699
SAA3006	★ 3728
	3323-24
SAA3027	3323-9
SAA3028	★ 3728
SAA3028	★ 3733
	3323-10
SAA5000	3323-60
SAA5012	3323-61
SAA5020	3381-95
SAA5025	★ 3732
	3381-94
SAA5030	★ 3732
	3381-96
SAA5040	★ 3732
	3381-79
SAA5041	3381-80
SAA5042	3381-81
SAA5043	3381-82
SAA5045	★ 3732
	3381-97
SAA5050	★ 3732
	3381-87
SAA5051	3381-88
SAA5052	3381-91
SAA5053	3381-90
SAA5054	3381-85
SAA5055	★ 3732
	3381-84
SAA5056	3381-89
SAA5057	3381-86
SAA5070	3382-54
SAA5230	★ 3732
SAA5240	★ 3732
SAA5240	★ 3733
SAA5350	★ 3719
SAA5350	★ 3732
	3381-93
SAA7000	★ 3727
	3316-129
SAA7010	★ 3727
	3316-130
SAA7020	★ 3727
	3316-131
SAA7030	★ 3727
	3316-132
SAB1018	891-51
SAB1018A	891-52
SAB1034	★ 1173
	848-72
SAB1077	891-43
SAB1077	3376-89
SAB1164	★ 3731
	891-26
	★ 3731
	3375-96
SAB1165	★ 3731
	891-27
SAB1256	★ 3731
	891-53
	★ 3731
	3375-95
SAB1534	★ 1173
	848-73
SAB3013	★ 3725
SAB3013	★ 3731
SAB3013	★ 3733
	3325-65
SAB3035	★ 3731
SAB3035	★ 3733
	3325-72
	3325-98
SAB3036	★ 3731
SAB3036	★ 3733
	3325-73
SAB3037	★ 3731
SAB3037	★ 3733
	3325-74
SAF1032	★ 3699
	3323-62
SAF1032P	★ 3728
SAF1034	★ 1173
	848-74
SAF1039	★ 3699
	3323-63
SAF1039P	★ 3728
SAF1534	★ 1173
	848-75
SAF3019	★ 3728
SAF3019	★ 3733
	3320-99
SC2670AC3	1452-123
SC2670BC3	1452-124
SCB2673A	★ 1702
	1452-136
	1466-13
SCB2673B	★ 1702
	1452-137
	1466-14
SCB2675	★ 1698
SCB2675	★ 1706
	1465-34
	1465-65
SCB2677A	★ 1708
	1466-15
SCB2677B	★ 1708
	1466-16
SCB68154	★ 1734
	1468-80
SCB68155	★ 1736
	1468-79
SCB68172	★ 1748
	1464-63
SCB68175	★ 1738
	1468-78
SCB68430	★ 1722
	1464-19
SCB68459	★ 1726
	1464-12
SCC0330M	4455-3
SCC0450M	4455-4
SCC0700M	4455-10
SCC1100M	4455-15
SCC2691	★ 1694
	2901-58
SCC2698	★ 1696
	2902-4

Arranged alphanumerically from left to right.

ADVERTISERS' PRODUCT INDEX

Device	Page-Line
Signetics (Cont'd)	
SCC68905	★ 1732
	1464-37
SCC68906	★ 1740
	1464-38
SCC80C31	★ 1716
	1457-44
SCC80C35	★ 1710
	1456-40
SCC80C351	★ 3733
	1457-57
SCC80C39	★ 1710
	1456-41
SCC80C40	★ 1710
	1456-42
SCC80C48	★ 1710
	1456-86
SCC80C49	★ 1710
	1456-87
SCC80C50	★ 1710
	1456-88
SCC80C51	★ 1716
	1457-55
SCC83C351	★ 3733
	1457-58
SCC84C	★ 3733
SCC84C00	★ 1718
	1429-44
SCC84C20	★ 1718
	1431-1
SCC84C40	★ 1718
	1431-2
SCN2641	★ 1682
	2900-17
	★ 1682
	1452-122
	1465-24
SCN2650A	1452-119
SCN2651C	★ 1684
	2901-21
	★ 1684
	1452-127
	1457-208
SCN2652A	★ 1686
	2901-9
	2901-15
	★ 1686
	1452-125
	1457-190
	1457-191
	1465-41
SCN2653	★ 1688
	2879-14
SCN2653A	★ 1688
	3380-107
	★ 1688
	1452-126
	1457-196
	1468-8
SCN2661A	★ 1690
	2900-73
	★ 1690
	1452-128
	1457-209
	1465-38
SCN2661B	★ 1690
	2900-74
	★ 1690
	1452-129
	1457-210
	1465-39
SCN2661C	★ 1690
	2900-75
	★ 1690
	1452-130
	1457-211
	1465-40
SCN2670	3808-18
SCN2670A	1466-68
SCN2670B	1466-69
SCN2671A	2880-20
SCN2671A	1452-134
SCN2671A	1458-14
SCN2672	★ 1700
	1456-116
SCN2672A	★ 1700
	1452-135
	1465-101
SCN2674	★ 1704
	1452-121
	(Continued)
SCN2674	1465-57
	¶ 381-15
SCN2681	★ 1692
	2900-65
	★ 1692
	1452-138
SCN68000	★ 1720
	1463-125
	★ 1720
	1437-12
SCN68008	1463-131
SCN68010	★ 1721
	1463-134
SCN68230	1464-53
SCN68440	1464-22
SCN68440	1466-83
SCN68451	1464-41
SCN68454	★ 1724
	1464-11
SCN68562	★ 1728
	1464-7
SCN68652	★ 1686
	2901-16
SCN68653	★ 1688
	2879-13
SCN68661	★ 1690
	2900-82
SCN68661B	★ 1690
	1466-90
SCN68661C	★ 1690
	1466-91
SCN68681	★ 1730
	2900-66
SCN68681C	★ 1730
	1464-68
SCN8031	★ 1714
	1457-45
SCN8035A	★ 1712
	1456-43
SCN8039A	★ 1712
	1456-44
SCN8040	★ 1712
	1456-45
SCN8048A	★ 1712
	1456-89
SCN8049A	★ 1712
	1456-90
SCN8050A	★ 1712
	1456-91
SCN8051	★ 1714
	1457-56
SCN8661A	1466-92
SE1012	★ 3708
	3337-30
SE1037	★ 3708
	3337-52
SE4558	★ 3729
	3366-1
SE5018	★ 3690
SE5018	★ 3720
	2853-31
SE5019	★ 3720
	2851-36
SE5030	★ 3686
SE5030	★ 3725
SE5118	★ 3725
	2852-6
SE5119	★ 3725
	2851-24
SE521	★ 3691
SE521	★ 3725
	3314-55
SE522	★ 3725
	3314-57
SE5230	★ 3707
SE527	★ 3691
SE527	★ 3725
	3312-55
SE529	★ 3723
	3312-56
SE530	★ 3721
SE530	★ 3729
	3346-94
SE531	★ 3729
	3353-38
SE532	★ 3729
	3334-127
	3365-38
SE538	★ 3729
	3346-93
SE5410	★ 3690
SE5410	★ 3722
	2858-9
SE5512	★ 3729
	3330-12
	3363-50
SE5514	★ 3729
	3330-13
SE5519	★ 3725
SE5521	★ 3692
SE5521	★ 3725
SE5532	★ 3721
SE5532	★ 3729
	3363-35
SE5532A	★ 3721
SE5532A	★ 3729
	3363-36
SE5534	★ 3708
SE5534	★ 3720
SE5534	★ 3729
	3346-133
SE5534A	★ 3708
SE5534A	★ 3720
SE5534A	★ 3729
	3346-134
SE5535	★ 3707
SE5535	★ 3729
	3363-74
SE5537	★ 3692
SE5537	★ 3720
	3404-79
SE5539	★ 3710
SE5539	★ 3729
	3334-254
	3354-33
	¶ 404-3
SE555	★ 3724
SE555	★ 3728
	3383-49
SE555C	★ 3724
SE555C	★ 3728
	3383-50
SE556	★ 3723
SE556	★ 3728
	3383-91
SE556-1	★ 3723
SE556-1	★ 3728
	3383-92
SE556-1C	★ 3723
SE556-1C	★ 3728
	3383-93
SE5560	★ 3713
SE5560	★ 3730
	3396-81
SE5561	★ 3713
SE5561	★ 3730
	3396-82
SE5562	★ 3713
	3396-83
SE558	★ 3720
	3383-103
SE5592	★ 3729
SE564	★ 3728
	3375-42
SE565	★ 3728
	3376-21
SE566	★ 3723
	3376-32
SE567	★ 3728
	3376-2
	3381-118
SE568	★ 3728
SE590	2894-3
SE592	★ 3722
SE592	★ 3729
	3308-18
SG1526A	★ 3716
SG1526A	★ 3730
	3396-84
SG2526A	★ 3716
SG2526A	★ 3730
	3396-85
SG3524	★ 3715
SG3524	★ 3720
SG3524	★ 3730
	3396-86
SG3526A	★ 3716
SG3526A	★ 3730
	3396-87
SMVME2000	2027-21
TBA120U	★ 3731
	3322-37
	(Continued)
TBA120U	3322-105
TBA120U	3326-63
TBA750C	3322-38
TBA750C	3326-64
TBA890	3326-25
TCA210	3316-61
TCA220	3369-20
TCA240	3398-84
TCA280A	3405-137
TCA520B	3355-16
TCA730A	3316-121
TCA740A	3316-122
TCA770	3322-39
TCA770	3322-106
TCA980	3307-51
TD4556	★ 3731
TDA 1580	3321-111
TDA0820T	★ 3727
TDA0820T	★ 3731
	3326-107
	3398-85
TDA1001B	★ 3727
	3322-68
TDA1010A	★ 3729
	3318-5
TDA1011	3318-66
TDA1013A	★ 3729
	3318-67
TDA1015	★ 3729
	3318-68
TDA1016	3323-151
TDA1020	★ 3729
	3318-6
TDA1022	3320-138
TDA1022	3398-60
TDA1023	★ 3730
	3405-138
TDA1024	★ 3730
	3405-139
TDA1028	3307-130
TDA1029	★ 3727
	2827-96
	★ 3727
	3307-131
	3328-29
TDA1072	★ 3695
TDA1072	★ 3727
	3321-37
TDA1074A	★ 3727
	3316-123
	3401-81
TDA1450	2846-29
TDA1506	★ 3730
	2895-136
TDA1508	3324-12
TDA1510	★ 3729
	3318-166
TDA1512	★ 3729
	3318-139
TDA1515	★ 3709
TDA1515	★ 3729
	3318-167
TDA1520	★ 3729
	3318-140
TDA1522	★ 3727
	3319-61
TDA1524	★ 3727
	3316-124
	3326-110
TDA1533	3327-154
TDA1534	★ 3688
TDA1534	★ 3725
TDA1534	★ 3733
	2846-30
TDA1535	★ 3725
TDA1540	★ 3691
TDA1540	★ 3725
TDA1540	★ 3733
	2870-28
TDA1559	★ 3730
	2895-137
TDA1571	★ 3727
	3321-123
TDA1574	★ 3727
	3321-124
TDA1576	★ 3727
	3321-142
TDA1578A	★ 3727
	3322-136
TDA1596	★ 3727
TDA2501	★ 3731
TDA2540	★ 3731
	3327-68
TDA2541	★ 3717
TDA2541	★ 3731
	3327-69
TDA2544	3327-70
TDA2545A	★ 3731
	3326-65
TDA2546A	★ 3731
	3326-66
TDA2555	★ 3731
TDA2577A	★ 3731
	3325-109
TDA2578A	★ 3731
	3325-110
TDA2579	★ 3731
TDA2593	★ 3731
	3325-131
TDA2594	★ 3731
	3325-132
TDA2595	★ 3731
	3325-111
TDA2611A	★ 3729
	3318-7
TDA2653	★ 3719
TDA2653	★ 3732
	3326-147
TDA2653A	★ 3719
TDA2653A	★ 3732
	3326-148
TDA2655A	3326-149
TDA2655B	3326-150
TDA2791	3326-67
TDA3047	★ 3700
TDA3047	★ 3728
	3307-80
	3322-167
	3323-2
TDA3048	★ 3700
TDA3048	★ 3728
	3323-3
TDA3083	3310-60
TDA3500	3325-13
TDA3505	★ 3731
	3325-14
TDA3510	3325-15
TDA3520	3325-16
TDA3540	★ 3731
	3327-71
TDA3541	★ 3731
	3308-19
	3327-72
TDA3560	3325-17
TDA3561	3325-18
TDA3562	★ 3731
	3325-19
TDA3563	★ 3718
TDA3563	★ 3731
	3325-20
TDA3564	★ 3731
	3327-73
TDA3568	★ 3731
TDA3650	3326-151
TDA3651	★ 3719
TDA3651	★ 3732
	3326-152
TDA3651A	★ 3719
TDA3651A	★ 3732
	3326-153
TDA3652	★ 3732
	3326-154
TDA3653	★ 3719
TDA3653	★ 3732
	3326-155
TDA3654	★ 3732
TDA3806	★ 3727
TDA3806	★ 3731
TDA3807	★ 3727
TDA3807	★ 3731
TDA3810	★ 3727
	3326-68
TDA3820	3316-125
TDA4500	3326-29
TDA4501	★ 3731
	3308-20
	3327-74
TDA4502	★ 3717
TDA4502	★ 3731
	3308-21
	3327-75
TDA4503	★ 3731
TDA4550	3325-21
TDA4555	★ 3731
	3325-22
TDA4556	3325-23
TDA4560	★ 3731
	3325-24
TDA4580	★ 3731
TDA5030	★ 3717
TDA5030	★ 3731
	3326-119
TDA7000	★ 3696
TDA7000	★ 3727
TDA7000	★ 3728
	3322-93
TDA7010T	★ 3727
	3322-94
TDA7020	★ 3696
TDA7020	★ 3727
	3322-95
TDA7050	★ 3710
TDA7050	★ 3728
TDA7050	★ 3729
	3318-190
TDA8400	★ 3733
TDA8440	★ 3733
TDA8442	★ 3733
TDA8443	★ 3733
TDA915	3318-69
TDD1742	★ 3727
TDD1742	★ 3731
TDD1742	★ 3733
TEA1002	3326-5
TEA1002	3327-111
TEA1010	★ 3730
	3328-44
TEA1012	★ 3730
TEA1021	3378-115
TEA1039	3398-107
TEA1042	★ 3728
	3382-45
TEA1043	3378-116
TEA1044	3378-117
TEA1046	★ 3728
	3382-46
TEA1055	3382-47
TEA1058T	★ 3730
	3328-45
TEA1060	★ 3728
	3379-39
TEA1061	★ 3728
	3379-40
TEA1067	★ 3703
TEA1067	★ 3728
	3379-41
TEA1075	★ 3704
TEA1075	★ 3728
	3382-95
TEA1080	★ 3703
TEA1080	★ 3728
	3380-108
TEA2000	★ 3731
TEA5550	★ 3727
	3321-38
TEA5560	★ 3727
	3321-143
TEA5570	★ 3727
	3321-96
TEA5580	★ 3727
	3322-137
TEA6000	★ 3727
TEA6000	★ 3733
	3321-144
UAA2183	★ 3728
ULN2003	★ 3721
	2894-80
	★ 3721
	3310-124
ULN2004	★ 3721
	2894-61
	★ 3721
	3310-125
μA723	★ 3721
μA723	★ 3730
	3393-130
μA723C	★ 3721
μA723C	★ 3730
	3393-131
μA733	★ 3721
μA733	★ 3729
	3308-22
μA733C	★ 3721
μA733C	★ 3729
	3308-23

¶ Indicates page number in Application Note Directory.
★ Indicates additional data is provided on the page noted.

Signetics (Cont'd)

Device	Page-Line
μA741	★ **3721**
	3330-28
	3353-47
μA741C	★ **3721**
	3355-35
μA747	★ **3721**
	3366-22
μA747C	★ **3721**
	3367-21
μA758	★ **3727**
	3322-138
μPD8741A	1457-28

Silicon Solutions

Device	Page-Line
Fast-Mask Engine	★ **5113**
Fast Mask Engine	5014-1
MACH100 Simulation Engine	★ **5113**
Mach	★ **5113**
	5025-2
	5025-3
	5031-1
Mach 100	5025-2
Mach 100	★ **5113**
Mach 1000	5025-3
Mach 1000	5031-1

Silicon Systems Inc.

Device	Page-Line
CC/CD	4491-40
CD	4491-38
CD	4491-42
CMOS Library	4481-26
SCA-12	★ **4751**
	4465-2
	★ **4751**
	3404-113
SCA-6	★ **4751**
	4465-1
	★ **4751**
	3404-114
SS981	3377-35
SSI101A	★ **3736**
	1468-88
SSI104	★ **3736**
	1468-87
SSI104L	★ **3736**
	2896-106
SSI105	1468-108
SSI108	★ **3736**
	1468-109
SSI114	★ **3736**
	1468-86
	1468-110
SSI115	★ **3736**
	1468-111
SSI116	★ **3736**
	1468-89
SSI117	★ **3736**
	1469-35
SSI122	★ **3736**
	1468-112
SSI180	3380-67
SSI183	2896-18
SSI184	2896-21
SSI188	★ **3736**
	2896-80
SSI201	★ **3737**
	3382-9
	¶ 412-12
SSI202	★ **3737**
	3381-127
	3382-10
SSI203	★ **3737**
	3381-128
	3382-11
SSI204	★ **3737**
	3381-129
	3382-12
SSI207	★ **3737**
	3381-108
SSI20C89	★ **3737**
	3379-34
SSI20C90	★ **3737**
	3379-35
SSI213	★ **3737**
	3380-68
SSI22100	★ **3737**
	2829-24
SSI22101	★ **3737**
	2829-25
SSI22102	★ **3737**
	2829-26
SSI22106	★ **3737**
	2829-27
SSI223	★ **3737**
	3379-126
SSI22301	★ **3737**
	3380-88
SSI263A	★ **3737**
	3323-147
SSI291	★ **3737**
	3380-69
SSI3522	★ **3737**
	3380-35
SSI3525A	3377-18
SSI3525A	3377-30
SSI3525B	3377-19
SSI3525B	3377-31
SSI440	1459-4
SSI440	1457-157
SSI440	1467-38
SSI441	★ **3736**
	2892-20
	★ **3736**
	1467-65
SSI501	★ **3736**
	1469-36
SSI510	★ **3736**
SSI520	★ **3736**
SSI521	★ **3736**
SSI531	★ **3736**
	2892-21
SSI540	★ **3736**
	1469-31
SSI541	★ **3736**
SSI545	★ **3736**
	1469-37
SSI550	★ **3736**
	2896-103
SSI570	★ **3736**
	2892-25
	★ **3736**
	1467-72
SSI575	★ **3736**
	2892-26
	★ **3736**
	1467-73
SSI580	★ **3736**
	2892-24
	★ **3736**
	1467-85
SSI590	★ **3736**
SSI591	★ **3736**
	1469-29
SSI67C401	★ **3736**
	3809-69
SSI67C402	★ **3736**
	3809-102
SSI80C50	★ **3737**
	3381-22
SSI80C60	★ **3737**
	3381-20
SSI82C100	4473-75
SSI82C101	4473-74
SSI8500	2878-4
SSI8502	2879-8
SSI8520	2878-17
SSI957	★ **3737**
	3381-130
	3382-13
SSI980	★ **3737**
	3377-36
SSI981	★ **3737**
SSI982	★ **3737**
	3377-37
SSI SC-01	3323-139
SSIK212	★ **3737**
	3380-19
SSIK214	★ **3737**
	3377-3

Siliconix

Device	Page-Line
421 Series	¶ 406-4
D125A	886-145
D125A	2829-7
D125B	886-146
D125B	2829-8
D129A	2828-111
D129B	2828-112
D139A	886-129
D139A	2828-106
D139B	886-130
D139B	2828-107
D139C	2828-108
D169A	★ **3260**
	2897-128
D169C	★ **3260**
	2895-49
D469A	★ **3260**
	2828-113
D469B	★ **3260**
	2828-114
D469C	★ **3260**
	2829-1
DF331A	3377-159
DF332A	3377-160
DF412	2876-81
DG123A	★ **3223**
	2824-120
DG123B	★ **3223**
	2824-124
DG125A	★ **3223**
	2824-122
DG125B	★ **3223**
	2824-126
DG126A	★ **3223**
	2827-59
DG126B	★ **3223**
	2827-69
DG129A	★ **3223**
	2827-39
DG129B	★ **3223**
	2827-49
DG133	¶ 402-16
DG133A	★ **3223**
	2822-111
DG133B	★ **3223**
	2823-8
DG134A	★ **3223**
	2823-23
DG134B	★ **3223**
	2823-35
DG139A	★ **3223**
	2827-89
DG139B	★ **3223**
	2827-91
DG140A	★ **3223**
	2827-26
DG140B	★ **3223**
	2827-28
DG141A	★ **3223**
	2822-92
DG141B	★ **3223**
	2822-99
DG142A	★ **3223**
	2827-93
DG142B	★ **3223**
	2827-95
DG143A	★ **3223**
	2825-53
DG143B	★ **3223**
	2825-62
DG144A	★ **3223**
	2825-31
DG144B	★ **3223**
	2825-43
DG145A	★ **3223**
	2827-84
DG145B	★ **3223**
	2827-86
DG146A	★ **3223**
	2825-18
DG146B	★ **3223**
	2825-21
DG171	¶ 402-16
DG172A	★ **3223**
	2824-92
DG172B	★ **3223**
	2824-93
DG172C	★ **3223**
	2824-94
DG180A	★ **3223**
	2822-89
	2822-95
DG180B	★ **3223**
	2822-90
	2822-96
DG181	¶ 402-12
DG181	¶ 402-16
DG181A	★ **3223**
	2822-105
	2822-109
DG181B	★ **3223**
	2822-115
	2823-4
DG182A	★ **3223**
	2823-15
	2823-20
DG182B	★ **3223**
	2823-29
	2823-33
DG183A	★ **3223**
	2827-17
	2827-21
DG183B	★ **3223**
	2827-18
	2827-22
DG184A	★ **3223**
	2827-33
	2827-37
DG184B	★ **3223**
	2827-42
	2827-46
DG185A	★ **3223**
	2827-53
	2827-57
DG185B	★ **3223**
	2827-63
	2827-67
DG186A	★ **3223**
	2825-11
	2825-15
DG186B	★ **3223**
	2825-12
	2825-16
DG187A	★ **3223**
	2825-25
	2825-29
DG187B	★ **3223**
	2825-34
	2825-38
DG188A	★ **3223**
	2825-47
	2825-51
DG188B	★ **3223**
	2825-57
	2825-61
DG189A	★ **3223**
	2826-3
	2826-7
DG189B	★ **3223**
	2826-4
	2826-8
DG190A	★ **3223**
	2826-13
	2826-18
DG190B	★ **3223**
	2826-19
	2826-21
DG191A	★ **3223**
	2826-26
	2826-30
DG191B	★ **3223**
	2826-34
	2826-38
DG200	¶ 402-16
DG200AA	★ **3223**
	2822-62
DG200AB	★ **3223**
	2822-81
DG200AC	★ **3223**
	2822-82
DG201AA	★ **3223**
	2823-91
DG201AB	★ **3223**
	2823-96
DG201AC	★ **3223**
	2823-97
DG202A	★ **3223**
	2823-92
DG202B	★ **3223**
	2823-93
DG202C	★ **3223**
	2823-98
DG211C	★ **3223**
	2823-94
DG212C	★ **3223**
	2823-95
DG221A	★ **3223**
DG221A	★ **3229**
	2823-63
DG221C	★ **3223**
DG221C	★ **3229**
	2823-64
DG243A	★ **3223**
	2825-86
DG243C	★ **3223**
	2825-87
DG271B	★ **3223**
	2828-1
DG271C	★ **3223**
	2827-102
DG300	¶ 402-3
DG300AA	★ **3223**
	2822-44
DG300AB	★ **3223**
	2822-45
DG300AC	★ **3223**
	2822-46
DG301	¶ 402-3
DG301AA	★ **3223**
	2824-143
DG301AB	★ **3223**
	2824-144
DG301AC	★ **3223**
	2824-145
DG302	¶ 402-3
DG302AA	★ **3223**
	2826-113
DG302AB	★ **3223**
	2826-114
DG302AC	★ **3223**
	2826-115
DG303	¶ 402-3
DG303AA	★ **3223**
	2825-75
DG303AB	★ **3223**
	2825-76
DG303AC	★ **3223**
	2825-77
DG304	¶ 402-3
DG304AA	★ **3223**
	2822-47
DG304AB	★ **3223**
	2822-48
DG304AC	★ **3223**
	2822-49
DG305	¶ 402-3
DG305AA	★ **3223**
	2824-146
DG305AB	★ **3223**
	2824-147
DG305AC	★ **3223**
	2824-148
DG306	¶ 402-3
DG306AA	★ **3223**
	2826-116
DG306AB	★ **3223**
	2827-1
DG306AC	★ **3223**
	2827-2
DG307	¶ 402-3
DG307AA	★ **3223**
	2825-78
DG307AB	★ **3223**
	2825-79
DG307AC	★ **3223**
	2825-80
DG308	¶ 403-1
DG308	¶ 403-2
DG308AA	★ **3223**
	2823-85
DG308AC	★ **3223**
	2823-86
DG309A	★ **3223**
	2823-87
DG309C	★ **3223**
	2823-88
DG381AA	★ **3223**
	2822-50
DG381AB	★ **3223**
	2822-51
DG381AC	★ **3223**
	2822-52
DG384AA	★ **3223**
	2826-82
DG384AB	★ **3223**
	2826-83
DG384AC	★ **3223**
	2826-84
DG387AA	★ **3223**
	2824-149
DG387AB	★ **3223**
	2824-150
DG387AC	★ **3223**
	2824-151
DG390AA	★ **3223**
	2825-81
DG390AB	★ **3223**
	2825-82
DG390AC	★ **3223**
	2825-83
DG400	★ **3223**
DG400	★ **3231**
DG401	★ **3223**
DG401	★ **3231**
DG402	★ **3223**
DG402	★ **3231**
DG403	★ **3223**
DG403	★ **3231**
DG404	★ **3223**
DG404	★ **3231**
DG405	★ **3223**
DG405	★ **3231**
DG501A	★ **3226**
	2830-189
	2830-194
DG501B	★ **3226**
	2830-190
	2830-195
DG501C	★ **3226**
	2830-191
	2830-196
DG503A	★ **3226**
	2830-192
DG503B	★ **3226**
	2830-193
DG5040A	★ **3223**
	2822-11
DG5040C	★ **3223**
	2822-12
DG5041A	★ **3223**
	2822-55
DG5041C	★ **3223**
	2822-56
DG5042A	★ **3223**
	2824-154
DG5042C	★ **3223**
	2824-155
DG5043A	★ **3223**
	2825-88
DG5043C	★ **3223**
	2825-89
DG5044A	★ **3223**
	2826-91
DG5044C	★ **3223**
	2826-92
DG5045A	★ **3223**
	2827-5
DG5045C	★ **3223**
	2827-6
DG506	¶ 402-12
DG506AA	★ **3227**
	2830-58
DG506AB	★ **3227**
	2830-60
DG506AC	★ **3227**
	2830-61
DG507AA	★ **3227**
	2831-13
DG507AB	★ **3227**
	2831-20
DG507AC	★ **3227**
	2831-21
DG508AA	★ **3226**
	2830-164
DG508AB	★ **3226**
	2830-168
DG508AC	★ **3226**
	2830-169
DG509AA	★ **3227**
	2830-59
DG509AB	★ **3227**
	2830-62
DG509AC	★ **3227**
	2830-63
DG5140A	★ **3223**
DG5140A	★ **3234**
	2822-2
DG5140C	★ **3223**
DG5140C	★ **3234**
	2822-9

Arranged alphanumerically from left to right.

ADVERTISERS' PRODUCT INDEX

Siliconix (Cont'd)

Device	Page-Line
DG5141A	★ 3223
DG5141A	★ 3234
	2822-32
DG5141C	★ 3223
DG5141C	★ 3234
	2822-33
DG5142A	★ 3223
DG5142A	★ 3234
	2824-132
DG5142C	★ 3223
DG5142C	★ 3234
	2824-138
DG5143A	★ 3223
DG5143A	★ 3234
	2825-90
DG5143C	★ 3223
DG5143C	★ 3234
	2825-68
DG5144A	★ 3223
DG5144A	★ 3234
	2826-78
DG5144C	★ 3223
DG5144C	★ 3234
	2826-80
DG5145A	★ 3223
DG5145A	★ 3234
	2826-100
DG5145C	★ 3223
DG5145C	★ 3234
	2826-106
DG5240A	★ 3223
DG5240A	★ 3237
	2822-3
DG5240C	★ 3223
DG5240C	★ 3237
	2822-10
DG5241A	★ 3223
DG5241A	★ 3237
	2822-34
DG5241C	★ 3223
DG5241C	★ 3237
	2822-35
DG5242A	★ 3223
DG5242A	★ 3237
	2824-133
DG5242C	★ 3223
DG5242C	★ 3237
	2824-139
DG5243A	★ 3223
DG5243A	★ 3237
	2825-91
DG5243C	★ 3223
DG5243C	★ 3237
	2825-69
DG5244A	★ 3223
DG5244A	★ 3237
	2826-79
DG5244C	★ 3223
DG5244C	★ 3237
	2826-81
DG5245A	★ 3223
DG5245A	★ 3237
	2826-101
DG5245C	★ 3223
DG5245C	★ 3237
	2826-107
DG526A	★ 3227
	2831-77
DG526B	★ 3227
	2831-78
DG526C	★ 3227
	2831-79
DG527A	★ 3227
	2831-14
DG527B	★ 3227
	2831-15
DG527C	★ 3227
	2831-16
DG528A	★ 3226
DG528A	★ 3244
	2831-17
DG528C	★ 3226
DG528C	★ 3244
	2831-22
DG529A	★ 3227
DG529A	★ 3244
	2830-90
DG529C	★ 3227
DG529C	★ 3244
	2830-91
DG568B	★ 3226
DG568B	★ 3246
	2831-42
DG568C	★ 3226
DG568C	★ 3246
	2831-43
DG569B	★ 3227
DG569B	★ 3246
	2830-82
DG569C	★ 3227
DG569C	★ 3246
	2830-83
DGM111A	2823-36
DGM111A	2823-37
DGM111B	2823-38
DGM111B	2823-39
DGM122A	2827-71
DGM122B	2827-72
G118A	★ 3226
	2828-88
G119A	★ 3226
	2828-93
G119B	★ 3226
	2828-94
IS03A	4455-36
IS03B	4455-38
IS03C	4455-40
IS03D	4455-42
IS03E	4455-44
IS03F	4455-46
IS03G	4455-48
IS03H	4455-50
IS05A	4455-37
IS05B	4455-39
IS05C	4455-41
IS05D	4455-43
IS05E	4455-45
IS05F	4455-47
IS05G	4455-49
IS05H	4455-51
ISO-3 Library	4481-27
ISO-5 Library	4481-28
L121A	¶ 391-4
L144	¶ 406-18
L144A	★ 3248
	3334-63
L144B	★ 3248
	3334-64
L144C	★ 3248
	3334-65
L161	¶ 414-8
L161A	★ 3248
	3315-28
L161B	★ 3248
	3315-26
L161C	★ 3248
	3315-27
LD110	¶ 390-2
LD110	¶ 390-18
LD110	¶ 421-5
LD110C	★ 3249
	2848-48
LD111	¶ 390-2
LD111	¶ 421-5
LD111A	¶ 390-18
LD111AC	★ 3249
	2848-49
LD114	¶ 390-18
LD120	¶ 390-3
LD120	¶ 390-18
LD120	¶ 421-10
LD120C	★ 3248
	2848-64
LD121	¶ 421-10
LD121A	¶ 390-3
LD121A	¶ 390-18
LD121AC	★ 3248
	2848-65
LD122	¶ 390-4
LD122	¶ 390-18
LD122C	★ 3248
	2848-66
LD130	¶ 390-18
LD130	¶ 391-4
LS121A	¶ 390-4
PWM125A	★ 3260
	3396-112
PWM125C	★ 3260
	3396-113
PWM127A	3396-114
PWM127C	3396-115
PWM25A	★ 3260
	3396-116
PWM25C	★ 3260
	3396-117
PWM27A	★ 3260
	3396-118
PWM27C	★ 3260
	3396-119
SD5000	★ 3223
SD5000	★ 3240
SD5001	★ 3223
SD5001	★ 3240
SD5002	★ 3223
SD5002	★ 3240
SD5400	★ 3226
SD5400	★ 3242
SD5401	★ 3226
SD5401	★ 3242
SD5402	★ 3226
SD5402	★ 3242
SI1000	3307-91
SI1010	3307-92
SI1020	3307-93
SI25HC04C	★ 3249
	808-56
SI3002	★ 3223
SI3705	★ 3226
SI520	★ 3248
	2835-48
	★ 3248
	3399-32
SI7135	★ 3248
SI7135	★ 3254
	2848-59
SI7250	★ 3260
	2829-2
	2892-10
	¶ 399-5
SI7652B	★ 3248
SI7652B	★ 3250
	3335-18
SI7652C	★ 3248
SI7652C	★ 3250
	3335-19
SI7660A	★ 3261
	3405-48
SI7660B	★ 3261
	3405-37
	3405-49
SI7660C	★ 3261
	3405-38
	3405-50
SI7661A	★ 3261
	3405-45
SI7661B	★ 3261
	3405-43
SI7661C	★ 3261
	3405-44
SI8020A	★ 3249
SI8020A	★ 3258
	2868-41
SI8020C	★ 3249
SI8020C	★ 3258
	2868-42
SI8021A	★ 3249
SI8021A	★ 3258
	2867-29
SI8021C	★ 3249
SI8021C	★ 3258
	2867-30
SI8601	★ 3248
SI8601	★ 3256
	2836-15
SI8602	3399-33
SI8901A	★ 3248
SI8901A	★ 3252
	3403-137
SI9100	★ 3260
	3396-120
SI9551	★ 3260
	2874-46
SI9552	★ 3260
	2874-40
SI9553	★ 3260
	2874-43
SI9554	★ 3260
	2874-37
SI9555	★ 3260
SI9556	★ 3260
SM110	¶ 419-6
U401	¶ 406-4
VN10KM	¶ 424-6
VN4000A	¶ 363-12
VN64GA	¶ 424-17
VQ1000	2898-70
VQ1001	2898-71
VQ1004	2898-72
VQ1006	2898-73
VQ2001	2898-74
VQ2004	2898-75
VQ2006	2898-76
VQ3001	2898-77
VQ7254	2898-78

Spectrum Software

Device	Page-Line
Micro-Cap II	4947-2
Micro-logic	4960-3

Sprague Electric Company

Device	Page-Line
3753	¶ 406-19
3755	¶ 406-19
NE5560	3395-58
NE5561	3395-59
NE5568	3395-60
SG3526	3395-61
TDA1170	3326-156
TDA1190Z	3326-69
TDA2002	3318-8
TDA2002A	3318-9
TDA2003	3318-10
TDA2008	3318-11
TDA2008	3318-141
TDA3190	3326-70
TL594C	3395-62
TL595C	3395-63
TPQ3724	3310-51
TPQ3725	3310-52
TPQ3725A	3310-53
UCN-4202A	★ 3269
	2896-32
	¶ 397-10
	¶ 398-10
UCN-4203A	★ 3269
	2896-33
UCN-4204B	★ 3269
	2896-34
UCN-4205B	★ 3269
	2896-35
UCN-4801A	2898-138
UCN-4805A	2875-31
UCN-4807A	★ 3269
	2895-28
UCN-4808A	★ 3269
	2895-29
UCN-4810A	¶ 399-9
UCN-4815A	¶ 399-9
UCN-4821A	2895-30
UCN-4822A	2895-31
UCN-4823A	2895-32
UCN-5800A	2898-58
	¶ 398-16
UCN-5801A	★ 3269
	2898-135
	¶ 398-16
UCN-5810A	★ 3269
	2875-28
	2894-5
UCN-5812A	★ 3269
	2894-6
UCN-5813B	★ 3268
UCN-5813B	★ 3269
	2896-56
	¶ 398-16
UCN-5814B	★ 3269
	2896-57
	¶ 398-16
UCN-5815A	★ 3269
	2875-27
	2898-136
UCN-5816A	★ 3269
	2895-43
UCN-5818A	★ 3269
	2894-7
UCN-5821A	★ 3269
	2895-37
UCN-5822A	★ 3269
	2895-38
UCN-5823	¶ 398-7
UCN-5823A	★ 3269
	2895-36
UCN-5825B	★ 3268
UCN-5825B	★ 3269
	2896-54
UCN-5826B	★ 3268
UCN-5826B	★ 3269
	2896-55
UCN-5832A	★ 3269
	2898-157
UCN-5833	★ 3269
	2898-158
UCN-5841A	2898-153
UCN-5842A	2898-154
UCN-5843A	2898-152
UCN-5851	★ 3269
	2895-46
UCN-5852	★ 3269
	2895-47
UCN-5853	★ 3269
UCN-5854	★ 3269
UCN-5881EP	2894-16
UCN-5890	★ 3269
	2898-150
UCN-5891	★ 3269
	2898-149
UCN-5895A	★ 3269
	2898-151
UCN-5900A	★ 3269
	2898-59
UCN-5901A	★ 3269
	2898-137
UCN-5910A	★ 3269
	2898-156
	¶ 398-7
UCN-6540	★ 3269
UCS-4401H	2894-8
UCS-4401H	2898-60
	¶ 398-6
UCS-4801H	2894-9
	¶ 398-6
UCS-4807H	¶ 398-6
UCS-4808H	¶ 398-6
UCS-4810H	2894-10
UCS-4810H	2895-42
	¶ 398-6
UCS-4815H	2877-23
	¶ 398-6
UCS-4820H	¶ 398-6
UCS-4821H	2895-33
UCS-4822H	2895-34
UCS-4823H	2895-35
UCS5800R	2894-42
UCS5801R	2895-8
UDN-2541	★ 3269
	2898-61
UDN-2541B	¶ 398-14
UDN-2542	★ 3269
	2898-62
UDN-2545B	★ 3269
	2894-43
UDN-2580A	★ 3269
	2896-90
	¶ 398-8
	¶ 398-10
	¶ 399-9
	¶ 402-13
	★ 3269
	3381-7
UDN-2585A	★ 3269
	2896-91
	¶ 398-14
	★ 3269
	3381-8
UDN-2588A	★ 3269
	2896-92
	★ 3269
	3381-9
UDN-2595A	★ 3269
	2895-39
	¶ 398-14
UDN-2596A	★ 3269
	2895-1
UDN-2597A	★ 3269
	2895-2
UDN-2598A	★ 3269
	2895-25
UDN-2599A	★ 3269
	2895-26
UDN-2841B	★ 3269
	3310-12
UDN-2845B	★ 3269
	3310-13
	¶ 398-10
UDN-2846B	¶ 398-10
UDN-2850A	¶ 398-8
UDN-2878W	★ 3269
	2897-151
	¶ 398-16
UDN-2879W	★ 3269
	2898-46
	¶ 398-16
UDN-2933B	★ 3267
UDN-2933B	★ 3269
	2895-105
	¶ 398-16
UDN-2934B	★ 3269
	2895-106
	¶ 398-16
UDN-2935Z	★ 3269
	2895-111
	¶ 398-16
UDN-2941B	★ 3269
	2894-44
	¶ 398-16
UDN-2943	★ 3269
UDN-2944W	★ 3269
	2898-49
UDN-2948W	★ 3269
	2894-46
UDN-2949Z	¶ 398-10
UDN-2950Z	★ 3269
	2895-112
	¶ 398-16
UDN-2952	★ 3269
	2895-99
UDN-2952B	¶ 398-16
UDN-2952W	¶ 398-16
UDN-2953	★ 3269
	2895-100
	¶ 398-16
UDN-2956A	2894-47
UDN-2956A	2896-93
	¶ 402-13
	3310-74
	3381-10
UDN-2957A	★ 3269
	2894-48
	2896-94
	★ 3269
	3310-75
	3381-11
UDN-2965W	★ 3269
	2896-22
	¶ 398-16
UDN-2975W	★ 3269
	2897-136
UDN-2976W	★ 3269
	2897-137
UDN-2980	¶ 399-9
UDN-2980A	¶ 398-8
UDN-2980A	¶ 398-10
UDN-2980A	¶ 402-13
UDN-2981A	★ 3269
	2895-3
	★ 3269
	3310-174
UDN-2982A	★ 3269
	2894-147
	★ 3269
	3310-175
UDN-2983A	★ 3269
	2895-4
	★ 3269
	3310-176
UDN-2984A	★ 3269
	2894-148
	★ 3269
	3310-177
UDN-2985A	2895-5
UDN-2986A	★ 3269
	2895-27
UDN-2993B	★ 3269
	2895-104
	¶ 398-16
UDN-2998W	★ 3267
UDN-2998W	★ 3269
	2895-103
UDN-3611M	★ 3269
	2897-22
UDN-3612M	★ 3269
	2897-63
UDN-3613M	★ 3269
	2897-124
UDN-3614M	★ 3269
	2897-94

¶ Indicates page number in Application Note Directory.
★ Indicates additional data is provided on the page noted.

Sprague Electric Company (Cont'd)

Device	Page-Line
UDN-5703A	★ 3269
	2898-116
UDN-5706A	★ 3269
	864-31
	★ 3269
	2898-85
UDN-5707A	★ 3269
	2898-95
UDN-5711M	★ 3269
	2897-23
UDN-5712M	★ 3269
	2897-64
UDN-5713M	★ 3269
	2897-125
UDN-5714M	★ 3269
	2897-95
UDN-5721M	2895-48
UDN-5722M	★ 3269
	2897-57
UDN-5723M	2897-68
UDN-5724M	2897-67
UDN-5732	★ 3269
UDN-5733A	★ 3269
	2898-106
UDN-5741M	★ 3269
	2897-28
UDN-5742M	★ 3269
	2897-26
	2897-58
UDN-5743M	★ 3269
	2897-33
UDN-5744M	2897-31
UDN-5751M	2897-27
UDN-5752M	2897-29
UDN-5753M	2897-32
UDN-5754M	2897-30
UDN-5800	★ 3269
	¶ 397-14
UDN-5810	¶ 397-14
UDN-5820	¶ 397-14
UDN-6100A	¶ 402-13
UDN-6116	★ 3269
	2876-147
UDN-6116A	¶ 399-9
UDN-6116A-1 to 7186A	¶ 398-7
UDN-6118	★ 3269
	2877-41
UDN-6126	★ 3269
UDN-6128	★ 3269
	2877-42
UDN-6138	★ 3269
	2877-43
UDN-6148	★ 3269
UDN-6510	★ 3269
	2895-63
UDN-6514	★ 3269
	2895-64
UDN-6514A	¶ 398-14
UDN-6540B	2898-155
UDN-7180	¶ 397-4
UDN-7180A	2877-63
UDN-7183A	¶ 397-4
UDN-7184A	¶ 397-4
UDN-7186A	¶ 397-4
UDN2953	¶ 398-16
UDN6100A	¶ 398-8
UDQ-2956R	2895-61
UDQ-2957R	2895-62
UDS-0400	2896-65
UDS-0400-1	2896-66
UDS-0402	2896-77
UDS-0402-1	2896-78
UDS-0403	2896-62
UDS-0403-1	2896-63
UDS-0406	2896-51
UDS-0406-1	2896-52
UDS-0407	2896-59
UDS-0407-1	2896-60
UDS-0408	2896-70
UDS-0408-1	2896-73
UDS-0432	2896-71
UDS-0432-1	2896-74
UDS-0433	2896-72
UDS-0433-1	2896-75
UDS-0500	2896-64
UDS-0502	2896-76
UDS-0503	2896-61
UDS-0506	2896-50
UDS-0507	2896-58
UDS-0508	2896-67
UDS-0532	2896-68
UDS-0533	2896-69
UDS-2981	2895-6
UDS-2981	3310-178
UDS-2982	2894-149
UDS-2982	3310-179
UDS-2983	2895-7
UDS-2983	3310-180
UDS-2984	2894-150
UDS-2984	3310-181
UDS-3611H	2897-24
UDS-3612H	2897-65
UDS-3613H	2897-126
UDS-3614H	2897-96
UDS-5703H	2898-117
UDS-5706H	864-32
UDS-5706H	2898-86
UDS-5707H	2898-96
UDS-5711H	2897-25
UDS-5712H	2897-66
UDS-5713H	2897-127
UDS-5714H	2897-97
UDS-5733H	2898-107
UDS-5790H	2898-65
UDS-5790H	3398-1
UDS-5791H	891-108
UDS-5791H	2898-66
UDS-5791H	3401-73
UGN-3013	3399-116
UGN-3013T	891-79
UGN-3019	891-80
UGN-3019	3399-117
UGN-3020T	891-81
UGN-3030	891-82
UGN-3030	3399-118
UGN-3040T	891-83
UGN-3040T	3399-119
UGN-3075	2895-52
UGN-3076	2895-53
UGN-3201M	891-84
UGN-3203M	891-85
UGN-3220S	891-86
UGN-3220S	3399-120
UGN-3501	891-87
UGN-3501	3399-121
UGN-3604M	3399-122
UGN-3605M	3399-123
UGS-3019	891-88
UGS-3019	3399-124
UGS-3020	891-89
UGS-3030	891-90
UGS-3030	3399-125
UGS-3075	2895-54
UGS-3076	2895-55
UHC/D-400	864-23
UHC/D-400	2898-87
UHC/D-402	864-69
UHC/D-402	2898-118
UHC/D-403	864-70
UHC/D-403	2898-119
UHC/D-406	864-24
UHC/D-406	2898-88
UHC/D-407	864-48
UHC/D-407	2898-98
UHC/D-408	864-49
UHC/D-408	2898-99
UHC/D-432	864-59
UHC/D-432	2898-108
UHC/D-433	864-60
UHC/D-433	2898-109
UHC/D-500	864-25
UHC/D-500	2898-89
UHC/D-502	864-71
UHC/D-502	2898-120
UHC/D-503	864-72
UHC/D-503	2898-121
UHC/D-506	864-26
UHC/D-506	2898-90
UHC/D-507	864-50
UHC/D-507	2898-100
UHC/D-508	864-51
UHC/D-508	2898-101
UHC/D-532	864-61
UHC/D-532	2898-110
UHC/D-533	864-62
UHC/D-533	2898-111
UHP-400	★ 3269
	864-27
	★ 3269
	2898-91
UHP-402	★ 3269
	864-73
	★ 3269
	2898-122
UHP-403	★ 3269
	864-74
	★ 3269
	2898-123
UHP-406	★ 3269
	864-28
	★ 3269
	2898-92
UHP-407	★ 3269
	864-52
	★ 3269
	2898-102
UHP-408	★ 3269
	864-53
	★ 3269
	2898-103
UHP-432	★ 3269
	864-63
	★ 3269
	2898-112
UHP-433	★ 3269
	864-64
	★ 3269
	2898-113
UHP-444	★ 3269
UHP-500	★ 3269
	864-29
	¶ 398-7
	★ 3269
	2898-93
UHP-502	★ 3269
	864-75
	★ 3269
	2898-124
UHP-503	★ 3269
	864-76
	★ 3269
	2898-125
UHP-506	★ 3269
	864-30
	★ 3269
	2898-94
UHP-507	★ 3269
	864-54
	★ 3269
	2898-104
UHP-508	★ 3269
	864-55
	★ 3269
	2898-105
UHP-532	★ 3269
	864-65
	★ 3269
	2898-114
UHP-533	★ 3269
	864-66
	¶ 398-7
	★ 3269
	2898-115
ULN-2000A	¶ 399-2
ULN-2001	★ 3269
ULN-2001A	2894-112
	¶ 399-3
	3310-132
ULN-2002A	★ 3269
	2894-130
	¶ 399-3
	★ 3269
	3310-133
ULN-2003A	★ 3269
	2894-88
	¶ 399-3
	★ 3269
	3310-134
ULN-2004A	★ 3269
	2894-65
	¶ 399-3
	★ 3269
	3310-135
ULN-2005A	★ 3269
	2894-89
	★ 3269
	3310-136
ULN-2011A	★ 3269
	2894-113
	★ 3269
	3310-144
ULN-2012A	★ 3269
	2894-131
	★ 3269
	3310-145
ULN-2013A	★ 3269
	2894-90
	★ 3269
	3310-146
ULN-2014A	2894-66
ULN-2014A	3310-147
ULN-2015A	★ 3269
	2894-91
	★ 3269
	3310-148
ULN-2021A	★ 3269
	2894-114
	★ 3269
	3310-154
ULN-2022A	★ 3269
	2894-132
	★ 3269
	3310-155
ULN-2023A	★ 3269
	2894-92
	★ 3269
	3310-156
ULN-2024A	★ 3269
	2894-67
	★ 3269
	3310-157
ULN-2025A	★ 3269
	2894-93
	★ 3269
	3310-158
ULN-2031A	3310-80
ULN-2032A	3310-81
ULN-2033A	3310-82
ULN-2046A	3309-36
ULN-2047A	3310-30
ULN-2054A	3309-95
ULN-2061M	★ 3269
	2896-110
	★ 3269
	3309-90
ULN-2062M	★ 3269
	2896-111
	★ 3269
	3309-91
ULN-2064B	★ 3269
	2898-19
	★ 3269
	3310-14
ULN-2065B	★ 3269
	2898-20
	★ 3269
	3310-15
ULN-2066B	2898-21
ULN-2066B	3310-16
ULN-2067B	2898-22
ULN-2067B	3310-17
ULN-2068B	2898-23
ULN-2068B	3310-18
ULN-2069B	2898-24
ULN-2069B	3310-19
ULN-2070B	2898-25
ULN-2070B	3310-20
ULN-2071B	2898-26
ULN-2071B	3310-21
ULN-2074B	2898-27
	¶ 398-16
	3310-22
ULN-2075B	2898-28
ULN-2075B	3310-23
ULN-2076B	2898-29
ULN-2076B	3310-24
ULN-2077B	2898-30
ULN-2077B	3310-25
ULN-2081A	3310-168
ULN-2082A	3310-165
ULN-2083A	3310-64
ULN-2086A	3309-37
ULN-2111A	3322-40
ULN-2111A	3326-71
ULN-2204	¶ 415-18
ULN-2204A	3321-97
ULN-2240A	3321-98
	¶ 414-14
ULN-2241A	3321-99
	¶ 414-14
	¶ 415-7
ULN-2242A	¶ 414-14
ULN-2243A	3321-20
ULN-2243A	3321-145
ULN-2243A	3322-72
ULN-2249A	3321-39
	¶ 415-7
ULN-2260A	3325-25
ULN-2270	3326-157
ULN-2280B	3318-70
ULN-2283B	3318-71
ULN-2290	3326-72
ULN-2350C	¶ 444-2
ULN-2351C	¶ 444-2
ULN-2401A	3319-131
ULN-2401A	3406-1
ULN-2429A	3319-132
ULN-2429A	3399-97
ULN-2430M	3383-51
ULN-2435A	3319-110
	¶ 420-7
ULN-2445A	3319-111
ULN-2455A	3319-112
ULN-2800A	¶ 398-10
ULN-2800A	¶ 399-2
ULN-2801A	★ 3269
	2895-11
	★ 3269
	3311-5
ULN-2802A	★ 3269
	2895-19
	★ 3269
	3311-6
ULN-2803A	★ 3269
	2894-157
	★ 3269
	3311-7
ULN-2804A	★ 3269
	2894-141
	¶ 399-9
	★ 3269
	3311-8
ULN-2805A	★ 3269
	2894-158
	★ 3269
	3311-9
ULN-2811A	★ 3269
	2895-12
	★ 3269
	3311-15
ULN-2812A	★ 3269
	2895-20
	★ 3269
	3311-16
ULN-2813A	★ 3269
	2894-159
	★ 3269
	3311-17
ULN-2814A	★ 3269
	2894-142
	★ 3269
	3311-18
ULN-2815A	2894-160
ULN-2815A	3311-19
ULN-2821A	★ 3269
	2895-13
	★ 3269
	3311-29
ULN-2822A	★ 3269
	2895-21
	★ 3269
	3311-30
ULN-2823A	★ 3269
	2894-161
	★ 3269
	3311-31
ULN-2824A	★ 3269
	2894-143
	★ 3269
	3311-32
ULN-2825A	★ 3269
	2894-162
	★ 3269
	3311-33
ULN-3310	3400-90
ULN-3310Y	¶ 423-15
ULN-3330	3400-88
ULN-3701Z	3318-12
	¶ 398-10
ULN-3702Z	3318-13
ULN-3703Z	3318-14
ULN-3705M	3318-72
ULN-3750B	3318-191
ULN-3751	¶ 406-19
ULN-3751B	★ 3269
	3357-84
ULN-3751Z	★ 3269
	3357-83
ULN-3755	★ 3269
	3368-30
ULN-3783M	3318-192
ULN-3784B	3318-15
ULN-3803A	3321-100
ULN-3809A	3322-139
ULN-3812A	3322-140
ULN-3820A	3321-49
ULN-3823A	3322-141
ULN-3838A	3321-40
ULN-3839A	3321-41
ULN-3859A	3322-53
ULN-3862A	3322-54
ULN-7001	¶ 398-7
ULN-7074B	¶ 398-7
ULN-8126	3396-121
ULN-8130A	3401-112
ULN-8160	3396-122
ULN-8161M	3396-123
ULN-8163	3395-64
ULN-8168M	3396-124
ULN-8194A	3396-125
ULN-8195A	3396-126
ULN2241A	¶ 415-6
ULN2249A	¶ 415-6
ULQ-8126	3396-127
ULS-2001	2894-115
ULS-2001	3310-137
ULS-2002	2894-133
ULS-2002	3310-138
ULS-2003	2894-94
ULS-2003	3310-139
ULS-2004	2894-68
ULS-2004	3310-140
ULS-2005	2894-95
ULS-2005	3310-141
ULS-2011	2894-116
ULS-2011	3310-149
ULS-2012	2894-134
ULS-2012	3310-150
ULS-2013	2894-96
ULS-2013	3310-151
ULS-2014	2894-69
ULS-2014	3310-152
ULS-2015	2894-97
ULS-2015	3310-153
ULS-2021	2894-117
ULS-2021	3310-159
ULS-2022	2894-135
ULS-2022	3310-160
ULS-2023	2894-98
ULS-2023	3310-161
ULS-2024	2894-70
ULS-2024	3310-162
ULS-2025	2894-99
ULS-2025	3310-163
ULS-2045H	3309-38
ULS-2064H	2898-31
ULS-2065H	2898-32
ULS-2066H	2898-33
ULS-2067H	2898-34
ULS-2068H	2898-35
ULS-2069H	2898-36
ULS-2070H	2898-37
ULS-2071H	2898-38
ULS-2074H	2898-39
ULS-2075H	2898-40
ULS-2076H	2898-41
ULS-2077H	2898-42
ULS-2083H	3310-65
ULS-2801	2895-14
ULS-2801	3311-10
ULS-2802	2895-22
ULS-2802	3311-11
ULS-2803	2894-163
ULS-2803	3311-12
ULS-2804	2894-144
ULS-2804	3311-13
ULS-2805	2894-164
ULS-2805	3311-14
ULS-2811	2895-15
ULS-2811	3311-20
ULS-2812	2895-23
ULS-2812	3311-21
ULS-2813	2894-165
ULS-2813	3311-22
ULS-2814	2894-145
ULS-2814	3311-23

Arranged alphanumerically from left to right.

ADVERTISERS' PRODUCT INDEX

Sprague Electric Company (Cont'd)

Device	Page-Line
ULS-2815	2894-166
ULS-2815	3311-24
ULS-2821	2895-16
ULS-2821	3311-34
ULS-2822	2895-24
ULS-2822	3311-35
ULS-2823	2894-167
ULS-2823	3311-36
ULS-2824	2894-146
ULS-2824	3311-37
ULS-2825	2894-168
ULS-2825	3311-38
ULS-8126R	3396-128
ULS-8160R	3396-129
ULS-8163R	3395-65

Tektronix

Device	Page-Line
8540	★ 5117 1821-11
8550	★ 5117 1821-12
856140 Systems	★ 5117 1821-13
QuickChip 1	★ 4756 844-104
QuickChip 2	★ 4756 844-105
QuickChip 28	★ 4756 4465-9 ★ 4756 844-106
QuickChip 3	★ 4756 844-107
V-Systems	★ 5117 1821-14

Texas Instruments

Device	Page-Line
2732	¶ 436-10
38S03X-30	3814-27
4257	¶ 438-7
4257	¶ 440-16
4500A	¶ 372-13
54/74ALS Series	¶ 360-18
54/74SC	4481-31
6502	¶ 372-13
6809E	¶ 372-11
7220	¶ 431-18
74LS245	¶ 361-6
8088	¶ 372-14
82S167A	★ 4793 4474-50
ADC0808	★ 720
ADC0831B	2835-15
ADC0832B	2835-16
ADC0834B	2835-17
AM26LS31	★ 722
AM26LS32AC	★ 722 2887-35
AM26LS32AM	★ 722 2887-36
AM26LS33AC	2887-54
AM26LS33AM	2887-55
AM26S10M	★ 721 888-95 ★ 721 2889-38
AM26S11M	★ 721 888-96 ★ 721 2889-39
DS7831	★ 721
DS7832	★ 721
EVM7000	1821-15
IDT74AHCT244	839-166
LM106	★ 719 3312-33
LM107	★ 718 3346-103
LM111	★ 719
LM124	★ 719 3334-167
LM139	★ 719 3316-10
LM139A	★ 719 3315-35
LM148	★ 719 3371-36
LM158	★ 718 3334-128 3365-39
LM193	★ 719 3314-29
MC1558	★ 718 3366-23
MC68000	¶ 372-15
MIL-STD-188	★ 722
N8T26	888-65
N8T26A	888-66
PAL16L8A	★ 725 4470-49
PAL16L8A-2	★ 725 4471-100
PAL16R4A	★ 725 4470-50
PAL16R4A-2	★ 725 4471-101
PAL16R6A	★ 725 4470-51
PAL16R6A-2	★ 725 4471-102
PAL16R8A	★ 725 4470-52
PAL16R8A-2	★ 725 4471-103
PAL20L8A	4470-53
PAL20R4A	4470-54
PAL20R6A	4470-55
PAL20R8A	4470-56
RM4136	★ 719
S55450	★ 721
SBP0400	¶ 381-17
SBP8316C	3849-49
SBP8316M	3849-50
SBP9708C	855-156
SBP9708C	1462-64
SBP9708M	855-157
SBP9708M	1462-65
SBP9818C	3849-36
SBP9818M	3849-37
SBP9901	★ 731
SBP9965	★ 731 1464-77
SBP9965C	★ 731 1462-76
SBP9965M	★ 731 1462-77
SBP9966	★ 731 1464-76 ¶ 366-14
SBP9989	★ 731 1464-75 ¶ 366-14 ¶ 372-6 ★ 731 1433-29
SBR9000	★ 731
SBR9901	★ 731
SBR9965	★ 731
SBR9966	★ 731
SE1000C	1451-80
SE1000P	1451-81
SE1000P	1413-20
SE1004C	1451-82
SE1100C	1451-83
SE1400P	1451-84
SE1400P	1413-21
SE2100P	1450-25
SE2100P	1451-87
SE2130P	1450-26
SE2130P	1451-88
SE2200P	1451-85
SE2200P	1413-22
SE2400P	1450-27
SE2400P	1451-89
SE5534	★ 718
SE555	★ 720 3383-54
SE556	★ 720 3383-94
SE70P162	1431-6
SG1524	★ 720 3396-130
SMJ27C256	★ 726
SMJ32010	★ 730 844-63
SMJ32020	★ 730
SMJ4161-15	★ 726 3827-94
SMJ4161-20	★ 726 3827-96
SMJ4164-12	★ 726 3827-39
SMJ4164-15	★ 726 3827-68
SMJ4164-20	★ 726 3827-88
SMJ4256-15	★ 726 3829-56
SMJ4256-20	★ 726 3829-73
SMJ4416-12	★ 726 3826-98
SMJ4416-15	★ 726 3826-103
SMJ4416-20	★ 726 3826-107
SMJ4464	★ 726
SMJ5517	¶ 372-6
SN427	★ 712
SN54/74'ALS620A	¶ 400-13
SN54/74'ALS638-9A	¶ 400-13
SN54/74'AS245	¶ 400-13
SN54/74'AS620-'623	¶ 400-13
SN54/74'AS638-9	¶ 400-13
SN54/74'AS640-645A	¶ 400-13
SN54/74ALS245	¶ 400-13
SN54/74LS222-228	¶ 435-6
SN5400	★ 712 870-191
SN5401	★ 712 871-146
SN5402	★ 712 865-98
SN5403	★ 712 871-147
SN5404	★ 712 857-85
SN5405	★ 712 857-145
SN5406	★ 712 864-113
SN5407	★ 712 864-93
SN5408	★ 712 869-78
SN5409	★ 712 869-137
SN5410	★ 712 870-116
SN54100	★ 712 875-5
SN54107	★ 712 867-165
SN54109	★ 712 867-108
SN54111	★ 712 868-20
SN54116	★ 712 875-30
SN5412	★ 712 870-166
SN54120	★ 712 887-90
SN54121	★ 712 880-100
SN54122	★ 712 880-114
SN54123	★ 712 880-148
SN54125	★ 712 856-97
SN54126	★ 712 856-122
SN54128	★ 712
SN5413	★ 712 887-105
SN54132	★ 712 887-151
SN54136	★ 712 874-65
SN5414	★ 712 888-29
SN54144	★ 712 862-46
SN54147	★ 712 889-47
SN54148	★ 712 888-149
SN54150	★ 712 880-82
SN54151A	★ 712 879-160
SN54153	★ 712 877-125
SN54154	★ 712
SN54155	★ 712 863-76
SN54156	★ 712 863-45
SN54157	★ 712 878-174
SN5416	★ 712 864-104
SN54160	★ 712 860-147
SN54161	★ 712 858-133
SN54162	★ 712 860-184
SN54163	★ 712 858-179
SN54164	★ 712
SN54165	★ 712
SN54166	★ 712
SN54167	★ 712 887-70
SN5417	★ 712 864-84
SN54170	★ 712
SN54173	★ 712 866-11
SN54174	★ 712 866-32
SN54175	★ 712 864-267
SN54176	★ 712 860-116
SN54177	★ 712 858-94
SN54178	★ 712
SN54179	★ 712
SN54180	★ 712 889-12
SN54181	★ 712 855-25
SN54182	★ 712 855-87
SN54184	★ 712 887-86 ★ 712 3808-29
SN54185A	★ 712 887-82 ★ 712 3808-26
SN54190	★ 712 861-156
SN54191	★ 712 859-164
SN54192	★ 712 861-124
SN54193	★ 712 860-24
SN54195	★ 712
SN54196	★ 712 860-117
SN54197	★ 712 858-95
SN54198	★ 712
SN54199	★ 712
SN5420	★ 712 869-174
SN5422	★ 712 870-81
SN54221	★ 712 880-128
SN5423	★ 712 865-15
SN54246	★ 712 2875-138
SN54247	★ 712 2875-123
SN5425	★ 712 865-10
SN54251	★ 712 880-37
SN54259	★ 712 875-133
SN5426	★ 712 864-44
SN54265	★ 712 887-140
SN5427	865-41
SN54278	★ 712 888-99
SN54279	★ 712 875-77
SN5428	★ 712 865-99
SN54283	★ 712 856-28
SN54284	★ 712 855-132
SN54285	★ 712 855-133
SN54290	★ 712 860-67
SN54293	★ 712 859-56
SN54298	★ 712 879-80
SN5430	★ 712 872-8
SN5432	★ 712 873-28
SN5433	★ 712 865-70
SN54365A	★ 712 856-166
SN54366A	★ 712 858-4 864-134
SN54367A	★ 712 856-167 864-135
SN54368A	★ 712 858-5
SN5437	★ 712 871-54
SN54376	★ 712 868-136
SN5438	★ 712 871-92
SN54390	★ 712 861-29
SN54393	★ 712 859-25
SN5440	★ 712 870-42
SN5442A	★ 712 862-130
SN5445	★ 712 862-95
SN5446A	★ 712 2875-139
SN5447A	★ 712 2875-124
SN5448	★ 712 2875-84
SN5450	★ 712 872-122
SN54508	¶ 438-11
SN5451	★ 712 872-82
SN5453	★ 712 872-167
SN5454	★ 712 872-160
SN5470	★ 712 867-78
SN5472	★ 712 867-86
SN5473	★ 712 867-166
SN5474	★ 712 864-214
SN5475	★ 712 875-39
SN5476	★ 712 868-29
SN5482	★ 712 855-11
SN5483A	★ 712 856-29
SN5485	★ 712 854-68
SN5486	★ 712 874-100
SN5490A	★ 712 860-68
SN5491	★ 712
SN5492A	★ 712 862-13
SN5493A	★ 712 859-57
SN5494	★ 712
SN5495	★ 712
SN5496	★ 712
SN5497	★ 712 888-112
SN54ALS00	★ 712
SN54ALS01	★ 712 871-158
SN54ALS02	★ 712 874-1
SN54ALS03B	★ 712 871-159
SN54ALS04A	★ 712 857-91
SN54ALS05A	★ 712 857-152
SN54ALS08	★ 712 869-87
SN54ALS09	★ 712 869-142
SN54ALS1000	★ 713
SN54ALS1002	★ 713
SN54ALS1004	★ 713
SN54ALS1008	★ 713
SN54ALS1010A	★ 713 870-123
SN54ALS1020	★ 713
SN54ALS1032	★ 713
SN54ALS1034	★ 713 856-172
SN54ALS109A	★ 713 867-113
SN54ALS10A	★ 712 870-124
SN54ALS112A	★ 713 868-79
SN54ALS113	★ 713
SN54ALS114A	★ 713 868-113
SN54ALS11A	★ 712 869-8
SN54ALS1241	884-11
SN54ALS1244A	★ 713 884-65
SN54ALS1245A	★ 713 885-67
SN54ALS12A	★ 712 870-171
SN54ALS133	★ 713 872-56
SN54ALS136	★ 713
SN54ALS137	★ 713 863-151
SN54ALS138	★ 713 863-102
SN54ALS139	★ 713
SN54ALS151	★ 713 879-164
SN54ALS153	★ 713 877-130
SN54ALS157	★ 713 878-176
SN54ALS158	★ 713 878-80
SN54ALS15A	★ 712 869-50
SN54ALS161A	★ 713 858-138
SN54ALS162A	★ 713 861-3
SN54ALS163A	★ 713 858-184
SN54ALS169B	★ 713 859-124
SN54ALS174	★ 713 866-36
SN54ALS175	★ 713 864-271
SN54ALS1805	864-157
SN54ALS191	★ 713 859-168
SN54ALS193	★ 713 860-28
SN54ALS20A	★ 713 869-181
SN54ALS21	★ 713 868-148
SN54ALS229	3809-10
SN54ALS22B	★ 713 870-84

¶ Indicates page number in Application Note Directory.
★ Indicates additional data is provided on the page noted.

Texas Instruments (Cont'd)

Device	Page-Line
SN54ALS230	883-110
SN54ALS231	883-111
SN54ALS240	★ 713
SN54ALS241	★ 713
SN54ALS242	★ 713
SN54ALS243	★ 713
SN54ALS244	★ 713
SN54ALS245	★ 713
SN54ALS251	★ 713 880-41
SN54ALS253	★ 713 878-36
SN54ALS257	★ 713 879-36
SN54ALS258	★ 713 878-121
SN54ALS259	★ 713
SN54ALS27	★ 713 865-46
SN54ALS273	★ 713 866-143
SN54ALS28A	★ 713 874-2
SN54ALS2967	2892-72
SN54ALS2968	★ 1301 2892-73
SN54ALS299B	★ 713 882-118
SN54ALS30A	★ 713 872-13
SN54ALS32	★ 713 873-35
SN54ALS323	★ 713 882-119
SN54ALS33A	★ 713 865-75
SN54ALS352	★ 713 878-13
SN54ALS353	★ 713 877-96
SN54ALS373	875-165
SN54ALS374	★ 713 866-170
SN54ALS37A	★ 713 871-59
SN54ALS38A	★ 713 871-98
SN54ALS520	★ 713 854-96
SN54ALS533	★ 713 876-50
SN54ALS534	★ 713 866-112
SN54ALS540	★ 713
SN54ALS541	★ 713
SN54ALS561A	★ 713 859-92
SN54ALS563	★ 713 876-51
SN54ALS564	★ 713 866-113
SN54ALS569A	★ 713 860-8
SN54ALS573	★ 713 875-166
SN54ALS574	★ 713 866-171
SN54ALS575	★ 713 866-172
SN54ALS576	★ 713 866-114
SN54ALS577	★ 713 866-173
SN54ALS580	★ 713 876-52
SN54ALS620A	★ 713 886-78
SN54ALS623A	★ 713 886-79
SN54ALS632	★ 729
SN54ALS632	★ 1228 889-67 ¶ 368-17 ★ 729 ★ 1228 2878-52
SN54ALS633	¶ 368-17
SN54ALS634	¶ 368-17
SN54ALS635	¶ 368-17
SN54ALS640A	★ 713 884-158
SN54ALS645	★ 713
SN54ALS646	★ 713
SN54ALS646	★ 1239 885-169
SN54ALS648	★ 713
SN54ALS648	★ 1239 885-170
SN54ALS651	★ 713 885-68 885-171
SN54ALS652	★ 713 885-69 885-172
SN54ALS688	★ 713 854-132
SN54ALS74A	★ 713 864-219
SN54ALS758	883-102
SN54ALS759	883-98
SN54ALS760	884-100
SN54ALS804	★ 713 864-148
SN54ALS805	★ 713 864-158
SN54ALS808	★ 713 864-139
SN54ALS818	★ 1244
SN54ALS819	★ 1244
SN54ALS832	★ 713 864-167 873-77
SN54ALS857	★ 713
SN54ALS86	★ 713 874-104
SN54ALS873	★ 713 875-10
SN54ALS874	★ 713 864-183
SN54ALS876	★ 713 864-184
SN54ALS878	★ 713 864-185
SN54ALS879	★ 713 864-186
SN54ALS996	★ 1300 875-151
SN54AS00	★ 713
SN54AS02	★ 713 874-10
SN54AS04	857-98
SN54AS08	★ 713 869-94
SN54AS10	★ 713 870-129
SN54AS1004	★ 714 857-99
SN54AS1032	★ 714 873-42
SN54AS1034	★ 714 856-142 856-176
SN54AS109	★ 713 867-117
SN54AS11	★ 713 869-13
SN54AS136	874-61
SN54AS138	★ 713 863-106
SN54AS157	★ 713 878-178
SN54AS158	★ 713 878-84
SN54AS161	★ 713 858-144
SN54AS163	★ 713 858-188
SN54AS169	★ 713 859-128
SN54AS174	★ 713 866-40
SN54AS181A	★ 713 855-31
SN54AS182	★ 713 855-95
SN54AS1881	855-32
SN54AS194	★ 713 881-127
SN54AS20	★ 713 869-186
SN54AS21	★ 713 868-152
SN54AS230	★ 713 883-116
SN54AS231	★ 713 883-117
SN54AS240	★ 713
SN54AS241	★ 713
SN54AS242	★ 713
SN54AS244	★ 713
SN54AS257	★ 713 879-38
SN54AS27	★ 713 865-50
SN54AS29822	882-171
SN54AS29823	882-160
SN54AS29824	882-161
SN54AS29825	882-39
SN54AS29826	882-40
SN54AS29841	876-126
SN54AS29842	876-127
SN54AS29843	876-109
SN54AS29844	876-110
SN54AS29845	876-89
SN54AS29846	876-90
SN54AS30	★ 713 872-17
SN54AS373	★ 713 875-173
SN54AS374	★ 713 866-186
SN54AS573	★ 713 875-174
SN54AS574	★ 713 866-187
SN54AS575	★ 713 866-188
SN54AS576	★ 713 866-121
SN54AS640	★ 713 884-177
SN54AS645	★ 713 885-82
SN54AS646	★ 713 885-184
SN54AS648	★ 713 885-185
SN54AS651	★ 713 885-1
SN54AS652	★ 713 885-2
SN54AS74	★ 713 864-223
SN54AS804B	★ 713 864-152
SN54AS805B	★ 713 864-162
SN54AS808B	★ 713 864-143
SN54AS821	★ 713 867-67
SN54AS822	★ 713 867-65
SN54AS832B	★ 713 864-171
SN54AS841	★ 713 876-118
SN54AS86	874-86
SN54AS866	★ 713 856-69
SN54AS867	★ 713 859-109 ¶ 356-17
SN54AS869	★ 714 859-110 ¶ 356-17
SN54AS874	★ 714 864-199
SN54AS876	★ 714 864-200
SN54AS881B	★ 714 855-33
SN54AS882	★ 714 855-96
SN54AS885	★ 714 854-134
SN54AS888	★ 1260 844-87 ★ 1260 1449-109
SN54AS890	★ 1276 1449-111
SN54HC00	★ 714 825-67
SN54HC02	★ 714 827-138
SN54HC03	★ 714 825-134
SN54HC04	★ 714 811-20
SN54HC05	★ 714 811-21
SN54HC08	★ 714 824-70
SN54HC09	★ 714 824-106
SN54HC10	★ 714 825-4
SN54HC107	★ 714 823-136
SN54HC109	★ 714 823-15
SN54HC11	★ 714 824-16
SN54HC112	★ 714 823-87
SN54HC113	★ 714 823-65
SN54HC114	★ 714 823-103
SN54HC125	★ 714 808-89
SN54HC126	★ 714 838-127
SN54HC133	★ 714 825-197
SN54HC137	★ 714 818-121
SN54HC138	★ 714 818-34
SN54HC139	★ 714 817-125
SN54HC14	★ 714 839-28
SN54HC151	★ 714 833-44
SN54HC152	★ 714 833-54
SN54HC153	★ 714 831-144
SN54HC157	★ 714 832-79
SN54HC158	★ 714 832-114
SN54HC160	★ 714 814-180
SN54HC161	★ 714 812-2
SN54HC162	★ 714 814-131
SN54HC163	★ 714 811-139
SN54HC164	★ 714 836-50
SN54HC165	★ 714 836-9
SN54HC166	★ 714 836-79
SN54HC173	★ 714 820-149
SN54HC174	★ 714 821-17
SN54HC175	★ 714 820-106
SN54HC180	★ 714 842-91
SN54HC190	★ 714 815-135
SN54HC191	★ 714 813-20
SN54HC192	★ 714 815-45
SN54HC193	★ 714 813-21
SN54HC194	★ 714 835-41
SN54HC195	★ 714 835-106
SN54HC20	★ 714 824-133
SN54HC21	★ 714 823-167
SN54HC237	★ 714 818-86
SN54HC238	★ 714 818-87
SN54HC240	★ 714 839-92
SN54HC241	★ 714 840-51
SN54HC242	★ 714 838-100
SN54HC243	★ 714 838-74
SN54HC244	★ 714 839-167
SN54HC245	★ 714 841-138
SN54HC251	★ 714 833-88
SN54HC253	★ 714 832-15
SN54HC257	★ 714 832-149
SN54HC258	★ 714 832-175
SN54HC259	★ 714 830-189
SN54HC266	★ 714 828-107
SN54HC27	★ 714 827-75
SN54HC273	★ 714 821-75
SN54HC280	★ 714 842-92
SN54HC298	★ 714 833-10
SN54HC30	★ 714 825-162
SN54HC32	★ 714 826-144
SN54HC352	★ 714 832-31
SN54HC353	★ 714 832-54
SN54HC36	★ 714 827-139
SN54HC365	★ 714 809-144
SN54HC366	★ 714 810-15
SN54HC367	★ 714 839-5
SN54HC368	★ 714 810-16
SN54HC373	★ 714 829-151
SN54HC374	★ 714 822-91
SN54HC377	★ 714 821-114
SN54HC378	★ 714 821-48
SN54HC379	★ 714 820-129
SN54HC386	★ 714 828-43
SN54HC390	★ 714 815-167
SN54HC393	★ 714 812-149
SN54HC4002	★ 714 827-22
SN54HC4020	★ 714 813-176
SN54HC4024	★ 714 813-44
SN54HC4040	★ 714 813-134
SN54HC4060	★ 714 814-21
SN54HC4075	★ 714 826-99
SN54HC4078A	★ 714 827-200
SN54HC42	★ 714 817-22
SN54HC4724	★ 714 830-190
SN54HC490	★ 714 815-156
SN54HC51	★ 714 826-54
SN54HC533	★ 714 830-76
SN54HC534	★ 714 821-176
SN54HC540	★ 714 810-78
SN54HC541	★ 714 841-139
SN54HC563	★ 714 830-77
SN54HC573	★ 714 829-152
SN54HC574	★ 714 822-92
SN54HC590	★ 714 813-110
SN54HC592	★ 714 813-90
SN54HC593	★ 714 813-91
SN54HC595	★ 714 836-105
SN54HC597	★ 714 836-95
SN54HC598	★ 714 836-27
SN54HC620	★ 714 841-23
SN54HC623	★ 714 841-140
SN54HC640	★ 714 841-48
SN54HC643	★ 714 841-75
SN54HC645	★ 714 841-141
SN54HC646	★ 714 840-170
SN54HC648	★ 714 840-124
SN54HC651	★ 714 840-125
SN54HC652	★ 714 840-171
SN54HC670	★ 714 838-3
SN54HC682	★ 714 806-139
SN54HC684	★ 714 806-140
SN54HC688	★ 714 806-141
SN54HC74	★ 714 820-35
SN54HC75	★ 714 830-153
SN54HC77	★ 714 829-2
SN54HC86	★ 714 828-44
SN54HCT137	★ 714 818-145
SN54HCT138	★ 714 818-68
SN54HCT237	★ 714 818-96
SN54HCT238	★ 714 818-97
SN54HCT240	★ 714 839-123
SN54HCT241	★ 714 840-56
SN54HCT244	★ 714
SN54HCT245	★ 714 841-175
SN54HCT373	★ 714 830-8
SN54HCT374	★ 714 822-141
SN54HCT533	830-119
SN54HCT534	822-19
SN54HCT540	★ 714 839-124
SN54HCT541	★ 714 810-126
SN54HCU04	★ 714 811-89
SN54LS00	★ 715 871-36
SN54LS01	★ 715 871-188
SN54LS02	★ 715 874-39

Arranged alphanumerically from left to right.

ADVERTISERS' PRODUCT INDEX

Device Page-Line

Texas Instruments (Cont'd)

SN54LS03 ★ 715 871-189
SN54LS04 ★ 715 857-126
SN54LS05 ★ 715 857-173
SN54LS08 ★ 715 869-121
SN54LS09 ★ 715 869-160
SN54LS10 ★ 715 870-153
SN54LS107A ★ 715 868-16
SN54LS109A ★ 715 867-137
SN54LS11 ★ 715 869-37
SN54LS12 ★ 715 870-181
SN54LS122 ★ 715 880-122
SN54LS123 ★ 715 880-157 ¶ 361-15
SN54LS125A ★ 715 856-114
SN54LS126A ★ 715 856-138
SN54LS13 ★ 715 887-126
SN54LS132 ★ 715 888-10
SN54LS136 ★ 715 874-83
SN54LS137 ★ 715 863-156
SN54LS138 ★ 715 863-127
SN54LS139A ★ 715 863-27
SN54LS14 ★ 715 888-49
SN54LS145 ★ 715 862-111
SN54LS147 ★ 715 889-51
SN54LS148 ★ 715 888-163
SN54LS15 ★ 715 869-63
SN54LS151 ★ 715 880-5
SN54LS153 ★ 715 877-151
SN54LS155A ★ 715 863-91
SN54LS156 ★ 715 863-60
SN54LS157 ★ 715 879-20
SN54LS158 ★ 715 878-105
SN54LS160A ★ 715 860-173
SN54LS161A ★ 715 858-164
SN54LS162A ★ 715 861-23
SN54LS163A ★ 715 859-18
SN54LS164 ★ 715
SN54LS169B 859-149
SN54LS173A 866-22
SN54LS174 866-62
SN54LS175 864-294
SN54LS181 855-65
SN54LS183 855-6
SN54LS189A 3831-104
SN54LS190 861-179
SN54LS191 860-5
SN54LS192 861-148
SN54LS193 860-48
SN54LS196 860-129
SN54LS197 858-109
SN54LS20 ★ 715 870-25
SN54LS21 ★ 715 868-172
SN54LS219A 3831-105
SN54LS22 ★ 715 870-99
SN54LS221 880-138
SN54LS222 ★ 729 3809-6
SN54LS224 ★ 729 3809-7
SN54LS245 885-123
SN54LS247 2875-125
SN54LS248 2875-85
SN54LS249 2875-54
SN54LS253 878-57
SN54LS257B 879-59
SN54LS258B 878-146
SN54LS26 ★ 715 871-131
SN54LS261 ★ 715 855-128
SN54LS266 ★ 715 874-179
SN54LS27 ★ 715
SN54LS273 ★ 715 866-160
SN54LS275 ★ 715 843-12
SN54LS279A ★ 715 875-90
SN54LS28 ★ 715 874-40
SN54LS280 ★ 715 889-27
SN54LS283 ★ 715 856-62
SN54LS289A ★ 715 3831-99
SN54LS290 ★ 715 860-96
SN54LS292 ★ 715 862-59
SN54LS293 ★ 715 859-86
SN54LS294 862-50
SN54LS295 ★ 715
SN54LS297 ★ 715 ¶ 361-2 ¶ 361-3
SN54LS298 ★ 715 879-117
SN54LS299 ★ 715
SN54LS30 ★ 715 872-38
SN54LS319A ★ 715 3831-100
SN54LS32 ★ 715 873-64
SN54LS320 ★ 715 887-58
SN54LS321 ★ 715 887-59
SN54LS322A ★ 715 856-79
SN54LS323 ★ 715
SN54LS33 ★ 715 865-86
SN54LS347 ★ 715 2875-97
SN54LS348 ★ 715 888-170
SN54LS352 ★ 715 878-31
SN54LS353 ★ 715 877-114
SN54LS356 ★ 715 880-33
SN54LS365 ★ 715
SN54LS366 ★ 715
SN54LS367 ★ 715
SN54LS368 ★ 715
SN54LS37 ★ 715 871-76
SN54LS373 ★ 715 876-29
SN54LS374 ★ 715 867-22
SN54LS375 ★ 715 875-57
SN54LS377 ★ 715 867-49
SN54LS378 ★ 715 866-92
SN54LS379 ★ 715 864-337
SN54LS38 ★ 715 871-114
SN54LS381A ★ 715 855-66
SN54LS382 ★ 716 855-67
SN54LS385 ★ 716 854-14
SN54LS386A ★ 716 874-134
SN54LS390 ★ 716 861-55
SN54LS393 ★ 716 859-41
SN54LS395 ★ 716
SN54LS396 ★ 716 876-141
SN54LS398 ★ 716 879-118
SN54LS399 ★ 716 879-119
SN54LS40 ★ 715 870-69
SN54LS42 ★ 715 862-145
SN54LS442 ★ 716
SN54LS47 ★ 715 2875-126
SN54LS48 ★ 715 2875-86
SN54LS49 ★ 715 2875-55
SN54LS490 ★ 716 861-56
SN54LS51 ★ 715 872-104
SN54LS54 ★ 715 872-181
SN54LS540 ★ 716
SN54LS541 ★ 716
SN54LS590 ★ 716 859-102
SN54LS592 ★ 716 859-98
SN54LS593 ★ 716 859-99
SN54LS595 ★ 716 882-95
SN54LS597 ★ 716 882-83
SN54LS598 ★ 716 882-84
SN54LS610 ★ 729 887-35 ¶ 369-7
SN54LS611 ¶ 369-7
SN54LS612 ¶ 369-7
SN54LS613 ¶ 369-7
SN54LS623 ★ 716
SN54LS624 ★ 716
SN54LS626 ★ 716
SN54LS629 ★ 716
SN54LS63 ★ 715 888-20
SN54LS630 ★ 716
SN54LS630 ★ 729 887-12 ¶ 435-11 ★ 716 ★ 729 2878-53
SN54LS631 ¶ 435-11
SN54LS640 ★ 716
SN54LS641 ★ 716
SN54LS642 ★ 716
SN54LS644 ★ 716
SN54LS645 ★ 716
SN54LS668 ★ 716 861-107
SN54LS669 ★ 716 859-150
SN54LS670 ★ 716
SN54LS673 ★ 716 883-26
SN54LS674 ★ 716 883-13
SN54LS681 ★ 716 855-168
SN54LS682 ★ 716 854-144
SN54LS683 ★ 716 854-125
SN54LS684 ★ 716 854-145
SN54LS685 ★ 716 854-126
SN54LS688 ★ 716 854-146
SN54LS689 ★ 716 854-127
SN54LS691 ★ 716 858-113
SN54LS693 ★ 716 858-114
SN54LS696 ★ 716 861-66
SN54LS697 ★ 716 859-105
SN54LS699 ★ 716 859-106
SN54LS73A ★ 715 868-17
SN54LS74A ★ 715 864-249
SN54LS75 ★ 715 875-58
SN54LS76A ★ 715 868-41
SN54LS78A ★ 715 867-149
SN54LS83A ★ 715 856-63
SN54LS85 ★ 715 854-69
SN54LS86A ★ 715 874-135
SN54LS90 ★ 715 860-97
SN54LS91 ★ 715
SN54LS92 ★ 715 862-28
SN54LS93 ★ 715 859-87
SN54LS95 ★ 715
SN54LS96 ★ 715
SN54S00 ★ 716 871-45
SN54S02 ★ 716 874-49
SN54S03 ★ 716 871-199
SN54S04 ★ 716 857-135
SN54S05 ★ 716 857-181
SN54S08 ★ 716 869-130
SN54S09 ★ 716 869-164
SN54S10 ★ 716 870-162
SN54S11 ★ 716 869-45
SN54S112 ★ 716 868-110
SN54S113 ★ 716 868-73
SN54S114 ★ 716 868-134
SN54S124 ★ 716 3376-47
SN54S132 ★ 716 888-15
SN54S133 ★ 716 872-70
SN54S134 ★ 716 872-52
SN54S135 ★ 716 874-57
SN54S138 ★ 716 863-137
SN54S139 ★ 716 863-36
SN54S140 ★ 716
SN54S15 ★ 716 869-69
SN54S151 ★ 716 880-15
SN54S153 ★ 716 878-1
SN54S157 ★ 716 879-30
SN54S158 ★ 716 878-113
SN54S162 ★ 716 861-27
SN54S163 ★ 716 859-22
SN54S168 ★ 716 861-109
SN54S169 ★ 716 859-155
SN54S174 ★ 716 866-71
SN54S175 ★ 716 864-303
SN54S181 ★ 716 855-77
SN54S182 ★ 716 855-119
SN54S194 ★ 716
SN54S195 ★ 716
SN54S196 ★ 716 860-131
SN54S197 ★ 716 858-111
SN54S20 ★ 716 870-33
SN54S22 ★ 716 870-105
SN54S226 ★ 716 888-97
SN54S240 ★ 716
SN54S241 ★ 716
SN54S244 ★ 716
SN54S251 ★ 716 880-69
SN54S257 ★ 716 879-67
SN54S258 ★ 716 878-155
SN54S260 ★ 716 865-32
SN54S280 ★ 716 889-40
SN54S281 ★ 716 855-171
SN54S283 ★ 716 856-66
SN54S299 ★ 716
SN54S30 ★ 716 872-44
SN54S32 ★ 716 873-73
SN54S37 ★ 716 871-80
SN54S373 ★ 716 876-38
SN54S374 ★ 716 867-34
SN54S38 ★ 716 871-118
SN54S381 ★ 716 855-78
SN54S40 ★ 716 870-77
SN54S51 ★ 716 872-113
SN54S64 ★ 716 873-13
SN54S65 ★ 716 873-20
SN54S74 ★ 716 864-257
SN54S85 ★ 716 854-78
SN54S86 ★ 716 874-143
SN54THCT1010-100 808-16
SN54THCT1010-140 808-17
SN55107A ★ 721 2886-24
SN55107B ★ 721 2886-37
SN55108A ★ 721 2886-30
SN55108B ★ 721 2886-42
SN55109A ★ 721 2883-47
SN55110A ★ 721 2883-51
SN55113 ★ 721 2883-43
SN55114 ★ 721 2883-25
SN55115 ★ 721 2887-1
SN55116 ★ 721 2891-29
SN55117 ★ 721 2891-35
SN55118 ★ 721 2891-31
SN55119 ★ 721 2891-33
SN55121 ★ 721 2881-8
SN55122 ★ 721 2885-15
SN55138 ★ 721 2889-26
SN55150 ★ 722
SN55152 ★ 722
SN55154 ★ 722
SN55156 ★ 722
SN55157 2886-51
SN55160 ★ 722
SN55161 ★ 722
SN5517 ★ 726
SN55172 ★ 722
SN55173 ★ 722 2887-41
SN55174 ★ 722
SN55176 ★ 722
SN55177 ★ 722
SN55178 ★ 722
SN55179 ★ 722
SN55180 886-140
SN55182 ★ 721 2887-5
SN55183 ★ 721 2883-35
SN55188 ★ 722 2881-48
SN55189 ★ 722 2885-25
SN55189A ★ 722 2885-34
SN55234 ★ 722 2899-7
SN55325 ★ 722 2892-42
SN55326 ★ 722 2892-46
SN55327 ★ 722 2892-47
SN55363 ★ 722
SN55365 ★ 722 2892-141
SN55369 2892-119
SN55426B ★ 720 2876-34
SN55427B ★ 720 2876-35
SN55450B ★ 721
SN55450B ★ 722 2897-5
SN55451B ★ 721
SN55451B ★ 722 2897-6
SN55452B ★ 722 2897-46
SN55453B ★ 722 2897-108
SN55454B ★ 722 2897-78
SN55461 ★ 722 2897-7
SN55462 ★ 722 2897-47
SN55463 ★ 722 2897-109
SN55464 ★ 722 2897-79
SN55471 ★ 722 2897-8
SN55472 ★ 722 2897-48
SN55473 ★ 722 2897-110
SN55474 ★ 722 2897-80
SN55500D ★ 720 2877-101
SN55501 ★ 720

¶ Indicates page number in Application Note Directory.
★ Indicates additional data is provided on the page noted.

Texas Instruments (Cont'd)

Device	Page-Line
SN5551	2874-47
SN5552	2874-41
SN5553	2874-44
SN5554	2874-38
SN55551	★ 720
SN55552	★ 720
SN55553	★ 720
SN55554	★ 720
SN7400	870-192
SN7401	871-148
SN7402	865-100
SN7403	871-149
SN7404	857-86
SN7405	857-146
SN7406	864-114
SN7407	864-94
SN7408	869-79
SN7409	869-138
SN7410	870-117
SN74100	875-6
SN74104	862-3
SN74105	862-4
SN74107	867-167
SN74109	867-109
SN74110	867-80
SN74111	868-21
SN74116	875-31
SN7412	870-167
SN74120	887-91
SN74121	880-101
SN74122	880-115
SN74123	880-149
SN74125	856-98
SN74126	856-123
SN74128	864-68
SN74128	2884-4
SN7413	887-106
SN74132	887-152
SN74136	874-66
SN7414	888-30
SN74141	2876-33
SN74142	862-44
SN74143	862-45
SN74144	862-47
SN74145	862-104
SN74147	889-48
SN74148	888-150
SN74150	880-83
SN74151A	879-161
SN74153	877-126
SN74154	863-178
SN74155	863-77
SN74156	863-46
SN74157	878-175
SN74159	864-4
SN7416	864-105
SN74160	860-148
	¶ 357-2
SN74161	858-134
	¶ 357-2
SN74162	860-185
	¶ 357-2
SN74163	858-180
	¶ 357-2
SN74164	881-174
SN74164	3856-60
SN74165	882-50
SN74165	3855-117
SN74166	882-67
SN74166	3856-11
SN74167	887-71
SN7417	864-85
SN74170	877-3
SN74170	3830-91
SN74172	877-30
SN74172	3830-114
SN74173	866-12
SN74174	866-33
SN74175	864-268
SN74176	860-118
SN74177	858-96
SN74178	881-91
SN74178	3854-66
SN74179	881-100
SN74179	3854-67
SN74180	889-13
SN74181	855-26
SN74182	855-88
	¶ 441-18
SN74184	887-87
SN74184	3808-30
SN74185A	887-83
SN74185A	3808-27
SN74190	861-157
SN74191	859-165
SN74192	861-125
SN74193	860-25
SN74194	881-126
SN74194	3854-68
SN74195	881-36
SN74195	3854-108
SN74196	860-119
SN74197	858-97
SN74198	882-29
SN74198	3855-85
SN74199	882-35
SN74199	3855-86
SN7420	869-175
SN7422	870-82
SN74221	880-129
SN7423	865-16
SN74246	2875-140
SN74247	2875-127
SN74248	2875-87
SN74249	2875-56
SN7425	865-11
SN74251	880-38
SN74259	875-134
SN7426	864-45
SN74265	887-141
SN7427	865-42
SN74273	866-140
SN74276	868-138
SN74278	888-100
SN74279	875-78
SN7428	865-101
SN74283	856-30
	¶ 441-18
SN74284	855-142
	¶ 441-18
SN74285	855-134
	¶ 441-18
SN74290	860-69
SN74293	859-58
SN74298	879-81
SN7430	872-9
SN7432	873-29
SN7433	865-71
SN74351	878-71
SN74365A	856-168
SN74366A	858-6
SN74367A	856-169
SN74367A	864-136
SN74368A	858-7
SN7437	871-55
SN74376	868-137
SN7438	871-93
SN7439	871-94
SN74390	861-30
SN74393	859-26
SN7440	870-43
SN74425	856-99
SN74426	856-124
SN7442A	862-131
SN7443A	862-69
SN7444A	862-65
SN7445	862-96
SN7446A	2875-141
SN7447A	2875-128
SN7448	2875-88
SN74490	861-31
SN7450	872-123
SN7451	872-83
SN7453	872-168
SN7454	872-161
SN7460	872-133
SN7470	867-79
SN7472	867-87
SN7473	867-168
SN7474	864-215
SN7475	875-40
SN7476	868-30
SN7480	854-162
SN7482	855-12
SN7483A	856-31
SN7485	854-70
SN7486	874-101
SN7489	877-47
SN7489	3831-108
SN7490A	860-70
SN7491A	882-104
SN7491A	3856-75
SN7492A	862-14
SN7493A	859-59
SN7494	881-118
SN7494	3855-29
SN7495A	881-70
SN7495A	3854-69
SN7496	881-158
SN7496	3855-52
SN7497	888-113
SN74ALS00A	871-3
SN74ALS01	871-160
SN74ALS02	874-3
SN74ALS03B	871-161
SN74ALS04B	857-92
SN74ALS05A	857-153
SN74ALS08	869-88
SN74ALS09	869-143
SN74ALS1000A	871-4
SN74ALS1002A	874-4
SN74ALS1003A	871-162
SN74ALS1004	857-93
SN74ALS1005	857-154
SN74ALS1008A	869-89
SN74ALS1010A	870-125
SN74ALS1011A	869-9
SN74ALS1020A	869-182
SN74ALS1032A	873-36
SN74ALS1034	856-173
SN74ALS1035	856-150
SN74ALS109A	867-114
SN74ALS10A	870-126
SN74ALS112A	868-80
SN74ALS113A	868-48
SN74ALS114A	868-114
SN74ALS11A	869-10
SN74ALS1240	883-126
SN74ALS1240-1	883-127
SN74ALS1241	884-12
SN74ALS1241-1	884-13
SN74ALS1242	883-32
SN74ALS1243	883-34
SN74ALS1244A	884-66
SN74ALS1244A-1	884-67
SN74ALS1245A	885-70
SN74ALS1245A-1	885-71
SN74ALS12A	870-172
SN74ALS131	863-164
SN74ALS133	872-57
SN74ALS136	874-69
SN74ALS137	863-152
SN74ALS138	863-103
SN74ALS151	879-165
SN74ALS153	877-131
SN74ALS157	878-177
SN74ALS158	878-81
SN74ALS15A	869-51
SN74ALS160B	860-152
SN74ALS1616	843-74
SN74ALS161B	858-139
SN74ALS1621	886-34
SN74ALS1621-1	886-35
SN74ALS1622	886-36
SN74ALS1622-1	886-37
SN74ALS162B	861-4
SN74ALS163B	858-185
SN74ALS1640A	884-159
SN74ALS1640A-1	884-160
SN74ALS1645	2891-4
SN74ALS1645A	885-72
SN74ALS1645A-1	885-73
SN74ALS168B	861-82
SN74ALS169B	859-125
SN74ALS174	866-37
SN74ALS175	864-272
SN74ALS1804	864-149
SN74ALS1805	864-159
SN74ALS1808	864-140
SN74ALS1832	864-168
SN74ALS1832	865-1
SN74ALS190	861-160
SN74ALS191	859-169
SN74ALS192	861-128
SN74ALS193	860-29
SN74ALS20A	869-183
SN74ALS21	868-149
SN74ALS2240	883-28
SN74ALS2241	883-29
SN74ALS2242	883-35
SN74ALS2243	883-36
SN74ALS2244	883-30
SN74ALS229	3809-11
SN74ALS22B	870-85
SN74ALS230	883-112
SN74ALS230-1	883-113
SN74ALS231	883-114
SN74ALS231-1	883-115
SN74ALS232	★ 1211
	877-37
SN74ALS233	★ 1215
	877-71
SN74ALS234	877-86
SN74ALS235	877-87
SN74ALS240A	883-136
SN74ALS240A	2882-64
SN74ALS240A-1	883-137
SN74ALS241A	884-14
SN74ALS241A	2882-31
SN74ALS241A-1	884-15
SN74ALS242B	883-47
SN74ALS242B	2888-47
SN74ALS242B-1	883-48
SN74ALS243A	883-49
SN74ALS243A	2888-48
SN74ALS243A-1	883-50
SN74ALS244A	884-68
SN74ALS244A	2882-32
SN74ALS244A-1	884-69
SN74ALS245A	885-74
SN74ALS245A	2891-5
SN74ALS245A-1	885-75
SN74ALS251	880-42
SN74ALS253	878-37
SN74ALS2540	883-128
SN74ALS2541	884-16
SN74ALS257A	879-37
SN74ALS258A	878-122
SN74ALS27	865-47
SN74ALS273	866-144
SN74ALS28A	874-5
SN74ALS2967	2892-74
SN74ALS2968	★ 1301
	2892-75
SN74ALS299	882-120
SN74ALS30A	872-14
SN74ALS32	873-37
SN74ALS323	882-121
SN74ALS33A	865-76
SN74ALS34	856-144
SN74ALS352	878-14
SN74ALS353	877-97
SN74ALS35A	856-153
SN74ALS368	858-8
SN74ALS373	875-167
SN74ALS374	866-174
SN74ALS37A	871-60
SN74ALS38A	871-99
SN74ALS40A	870-47
SN74ALS465A	857-52
SN74ALS466A	858-59
SN74ALS467A	857-53
SN74ALS468A	858-60
SN74ALS518	854-114
SN74ALS519	854-115
SN74ALS520	854-97
SN74ALS521	854-98
SN74ALS522	854-99
SN74ALS526	4473-53
SN74ALS527	4473-54
SN74ALS527	854-108
SN74ALS528	4473-52
SN74ALS533	876-53
SN74ALS534	866-115
SN74ALS540	883-129
SN74ALS540	2882-65
SN74ALS540-1	883-130
SN74ALS540-1	2882-66
SN74ALS541	884-17
SN74ALS541	2882-33
SN74ALS541-1	884-18
SN74ALS541-1	2882-34
SN74ALS560A	861-62
SN74ALS561A	859-93
SN74ALS563	876-54
SN74ALS564A	866-116
SN74ALS568A	861-72
SN74ALS569A	860-9
SN74ALS573A	875-168
SN74ALS574A	866-175
SN74ALS575A	866-176
SN74ALS576A	866-117
SN74ALS577A	866-177
SN74ALS580	876-55
SN74ALS616	★ 1219
	887-10
	★ 1219
	2878-54
SN74ALS617	★ 1219
	887-11
	★ 1219
	2878-55
SN74ALS620A	886-80
SN74ALS620A-1	886-81
SN74ALS621A	886-38
SN74ALS621A-1	886-39
SN74ALS622A	886-40
SN74ALS622A-1	886-41
SN74ALS623A	886-82
SN74ALS623A-1	886-83
SN74ALS632	¶ 368-17
SN74ALS632A	★ 1228
	889-63
	★ 1228
	2878-56
SN74ALS633	★ 1228
	889-64
	¶ 368-17
	★ 1228
	2878-57
SN74ALS634	★ 1228
	889-65
	¶ 368-17
	★ 1228
	2878-58
SN74ALS635	★ 1228
	889-66
	¶ 368-17
	★ 1228
	2878-59
SN74ALS638A	884-118
SN74ALS638A-1	884-119
SN74ALS639A	884-120
SN74ALS639A-1	884-121
SN74ALS640A	884-161
SN74ALS640A-1	884-162
SN74ALS641A	885-41
SN74ALS641A-1	885-42
SN74ALS642A	884-133
SN74ALS642A-1	884-134
SN74ALS643A	884-163
SN74ALS643A-1	884-164
SN74ALS644A	885-139
SN74ALS644A-1	885-140
SN74ALS645A	885-76
SN74ALS645A	2891-6
SN74ALS645A-1	885-77
SN74ALS646	★ 1239
	885-173
SN74ALS646-1	★ 1239
	885-174
SN74ALS647	★ 1239
	885-163
SN74ALS647-1	★ 1239
	885-164
SN74ALS648	★ 1239
	885-175
SN74ALS648-1	★ 1239
	885-176
SN74ALS649	★ 1239
	885-165
SN74ALS649-1	★ 1239
	885-166
SN74ALS651	884-165
SN74ALS651	885-177
SN74ALS651-1	885-178
SN74ALS652	884-166
SN74ALS652	885-179
SN74ALS652-1	885-180
SN74ALS653	885-150
SN74ALS653-1	885-151
SN74ALS654	885-153
SN74ALS654-1	885-154
SN74ALS666	876-144
SN74ALS667	876-143
SN74ALS677	854-31
SN74ALS678	854-32
SN74ALS679	854-33
SN74ALS680	854-34
SN74ALS688	854-133
SN74ALS689	854-116
SN74ALS742	856-83
SN74ALS743	856-84
SN74ALS746	856-85
SN74ALS746-1	856-86
SN74ALS747	856-87
SN74ALS747-1	856-88
SN74ALS74A	864-220
SN74ALS756	883-120
SN74ALS756-1	883-121
SN74ALS757	884-3
SN74ALS757-1	884-4
SN74ALS758	883-103
SN74ALS759	883-99
SN74ALS760	884-101
SN74ALS762	856-82
SN74ALS763	856-81
SN74ALS8003	869-166
SN74ALS804	864-150
SN74ALS805	864-160
SN74ALS808	864-141
SN74ALS810	874-151
SN74ALS811	874-165
SN74ALS818	★ 1244
SN74ALS819	★ 1244
SN74ALS832	864-169
SN74ALS832	865-2
SN74ALS841	876-123
SN74ALS842	876-115
SN74ALS843	876-98
SN74ALS844	876-97
SN74ALS845	876-87
SN74ALS846	876-88
SN74ALS857	879-135
SN74ALS86	874-105
SN74ALS873A	875-11
SN74ALS874A	864-187
SN74ALS876A	864-188
SN74ALS878A	864-189
SN74ALS879A	864-190
SN74ALS880	875-95
SN74ALS990	876-104
SN74ALS991	876-103
SN74ALS992	876-106
SN74ALS993	876-105
SN74ALS994	★ 1299
	876-114
SN74ALS995	★ 1299
	876-113
SN74ALS996	★ 1300
	875-152
SN74AS00	871-9
SN74AS02	874-11
SN74AS04	857-100
SN74AS08	869-95
SN74AS10	870-130
SN74AS1000A	871-10
SN74AS1004	857-101
SN74AS1008A	869-96
SN74AS1032A	873-43
SN74AS1034A	856-143
SN74AS1034A	856-177
SN74AS1036A	864-58
SN74AS1036A	874-12
SN74AS109	867-118
SN74AS11	869-14
SN74AS131	863-165
SN74AS136	874-62
SN74AS137	863-153
SN74AS138	863-107
SN74AS150	880-84
SN74AS151	879-166
SN74AS153	877-132
SN74AS157	878-179
SN74AS158	878-85
SN74AS160	860-155
SN74AS161	858-145
SN74AS162	861-5
SN74AS163	858-189
SN74AS168	861-85
SN74AS169	859-129
SN74AS174	866-41
SN74AS175	864-275
SN74AS1804	864-153
SN74AS1805	864-163
SN74AS1808	864-144
SN74AS181A	855-34
SN74AS182	855-97
SN74AS1832	864-172
SN74AS1881	855-35
SN74AS194	881-128
SN74AS195	881-37
SN74AS20	869-187
SN74AS21	868-153
SN74AS230	883-118
SN74AS231	883-119
SN74AS240	883-138
SN74AS240	2883-1

Arranged alphanumerically from left to right.

ADVERTISERS' PRODUCT INDEX

Device	Page-Line
Texas Instruments (Cont'd)	
SN74AS241	884-21
SN74AS241	2882-35
SN74AS242	883-55
SN74AS242	2888-62
SN74AS243	883-56
SN74AS243	2888-63
SN74AS244	884-76
SN74AS244	2882-36
SN74AS245	885-83
SN74AS245	2891-7
SN74AS250	880-89
SN74AS251	880-43
SN74AS253	878-38
SN74AS257	879-39
SN74AS258	878-125
SN74AS2620	885-34
SN74AS2623	885-36
SN74AS264	855-98
SN74AS2640	885-35
SN74AS2645	885-37
SN74AS27	865-51
SN74AS280	889-16
SN74AS282	855-99
SN74AS286	889-44
SN74AS298	879-82
SN74AS29822	882-172
SN74AS29823	882-162
SN74AS29824	882-163
SN74AS29825	882-41
SN74AS29826	882-42
SN74AS29841	876-128
SN74AS29842	876-129
SN74AS29843	876-111
SN74AS29844	876-112
SN74AS29845	876-91
SN74AS29846	876-92
SN74AS299	882-122
SN74AS30	872-18
SN74AS32	873-44
SN74AS323	882-123
SN74AS34	856-147
SN74AS352	878-15
SN74AS353	877-98
SN74AS373	875-175
SN74AS374	866-189
SN74AS533	876-60
SN74AS534	866-118
SN74AS573	875-176
SN74AS574	866-190
SN74AS575	866-191
SN74AS576	866-122
SN74AS577	866-192
SN74AS580	876-61
SN74AS620	886-88
SN74AS621	886-46
SN74AS622	886-47
SN74AS623	886-89
SN74AS638	884-126
SN74AS639	884-127
SN74AS640	885-3
SN74AS641	885-45
SN74AS642	884-137
SN74AS643	885-4
SN74AS644	885-141
SN74AS645	885-84
SN74AS646	885-186
SN74AS648	885-187
SN74AS651	885-5
SN74AS652	885-6
SN74AS74	864-224
SN74AS756	883-122
SN74AS757	884-5
SN74AS758	883-100
SN74AS759	883-101
SN74AS760	884-102
SN74AS762	884-103
SN74AS763	884-99
SN74AS804B	864-154
SN74AS805B	864-164
SN74AS808B	864-145
SN74AS810	874-146
SN74AS811	874-148
SN74AS821	867-68
SN74AS822	867-66
SN74AS823	867-60
SN74AS824	867-58
SN74AS825	867-54
SN74AS826	867-52
SN74AS832B	864-173

Device	Page-Line
SN74AS841	876-119
SN74AS842	876-116
SN74AS843	876-99
SN74AS844	876-95
SN74AS845	876-81
SN74AS846	876-40
SN74AS850	880-73
SN74AS851	880-74
SN74AS852	886-118
SN74AS856	886-119
SN74AS857	879-136
SN74AS86	874-87
SN74AS866	856-70
SN74AS867	859-111
SN74AS869	859-112
SN74AS870	★ 1250
	876-137
SN74AS871	★ 1250
	876-138
SN74AS873	875-14
SN74AS874	864-201
SN74AS876	864-202
SN74AS877	★ 1255
	888-138
SN74AS878	864-203
SN74AS879	864-204
SN74AS880	875-98
SN74AS881A	855-36
SN74AS882	855-100
SN74AS885	854-135
SN74AS887	1448-41
SN74AS888	★ 1260
	844-88
	★ 1260
	1449-110
SN74AS890	★ 1276
	1449-112
SN74AS895	1448-40
SN74AS897	★ 1288
	854-30
SN74AS95	881-73
SN74ASA87	¶ 356-17
SN74H00	871-23
SN74H01	871-167
SN74H04	857-112
SN74H05	857-157
SN74H10	870-139
SN74H101	867-101
SN74H102	867-98
SN74H103	868-77
SN74H106	868-90
SN74H108	868-45
SN74H11	869-24
SN74H15	869-52
SN74H183	855-3
	¶ 441-18
SN74H20	870-11
SN74H21	868-158
SN74H22	870-88
SN74H30	872-24
SN74H40	870-56
SN74H50	872-128
SN74H51	872-89
SN74H52	872-74
SN74H53	872-154
SN74H54	872-151
SN74H55	872-148
SN74H60	887-133
SN74H61	887-137
SN74H62	888-55
SN74H71	867-96
SN74H73	867-175
SN74H74	864-235
SN74H76	868-32
SN74H78	867-142
SN74H87	888-107
SN74HC00	825-68
SN74HC01	824-168
SN74HC02	827-140
SN74HC03	825-135
SN74HC04	811-22
SN74HC05	811-23
SN74HC08	824-71
SN74HC09	824-107
SN74HC10	825-5
SN74HC107	823-137
SN74HC109	823-16
SN74HC11	824-17
SN74HC112	823-88
SN74HC113	823-66
SN74HC114	823-104
SN74HC125	808-90

Device	Page-Line
SN74HC126	808-91
SN74HC132	838-156
SN74HC133	825-198
SN74HC137	818-122
SN74HC138	818-35
SN74HC139	817-126
SN74HC14	839-29
SN74HC147	808-51
SN74HC148	808-63
SN74HC151	833-45
SN74HC152	833-55
SN74HC153	831-145
SN74HC154	819-31
SN74HC157	832-80
SN74HC158	832-115
SN74HC160	814-181
SN74HC161	812-3
SN74HC162	814-132
SN74HC163	811-140
SN74HC164	836-51
SN74HC165	836-10
SN74HC166	836-80
SN74HC173	820-150
SN74HC174	821-18
SN74HC175	820-107
SN74HC180	842-93
SN74HC181	806-168
SN74HC182	806-90
SN74HC189	831-100
SN74HC190	815-136
SN74HC191	813-22
SN74HC192	815-46
SN74HC193	813-23
SN74HC194	835-42
SN74HC195	835-107
SN74HC20	824-134
SN74HC21	823-168
SN74HC237	818-88
SN74HC238	818-89
SN74HC239	817-127
SN74HC240	839-93
SN74HC241	840-52
SN74HC242	838-101
SN74HC243	838-75
SN74HC244	839-168
SN74HC245	841-142
SN74HC251	833-89
SN74HC253	832-16
SN74HC257	832-150
SN74HC258	832-176
SN74HC259	830-191
SN74HC266	828-108
SN74HC27	827-76
SN74HC273	821-76
SN74HC280	842-94
SN74HC283	806-50
SN74HC298	833-11
SN74HC299	836-160
SN74HC30	825-163
SN74HC32	826-145
SN74HC322	836-81
SN74HC323	836-106
SN74HC352	832-32
SN74HC353	832-55
SN74HC354	833-90
SN74HC356	833-91
SN74HC36	827-141
SN74HC365	809-145
SN74HC366	810-17
SN74HC367	839-6
SN74HC368	810-18
SN74HC373	829-153
SN74HC374	822-93
SN74HC375	829-28
SN74HC377	821-115
SN74HC378	821-49
SN74HC379	820-130
SN74HC381	806-169
SN74HC382	807-8
SN74HC386	828-45
SN74HC390	815-168
SN74HC393	812-150
SN74HC4002	827-23
SN74HC4017	814-82
SN74HC4020	813-177
SN74HC4022	816-140
SN74HC4024	813-45
SN74HC4040	813-135
SN74HC4060	814-22
SN74HC4061	808-148
SN74HC4075	826-100
SN74HC4078A	827-201

Device	Page-Line
SN74HC42	817-23
SN74HC4514	819-11
SN74HC4515	819-7
SN74HC4724	830-192
SN74HC490	815-157
SN74HC51	826-55
SN74HC533	830-78
SN74HC534	821-177
SN74HC540	810-79
SN74HC541	841-143
SN74HC563	830-79
SN74HC564	821-178
SN74HC573	829-154
SN74HC574	822-94
SN74HC589	836-118
SN74HC590	813-111
SN74HC592	813-92
SN74HC593	813-93
SN74HC594	836-107
SN74HC595	836-108
SN74HC604	833-15
SN74HC620	841-24
SN74HC623	841-144
SN74HC640	841-49
SN74HC643	841-76
SN74HC645	841-145
SN74HC646	840-172
SN74HC648	840-126
SN74HC651	840-127
SN74HC652	840-173
SN74HC658	842-56
SN74HC659	842-57
SN74HC664	842-58
SN74HC665	842-59
SN74HC670	838-4
SN74HC673	836-176
SN74HC674	836-174
SN74HC677	806-99
SN74HC678	806-100
SN74HC679	806-97
SN74HC680	806-98
SN74HC682	806-142
SN74HC684	806-143
SN74HC688	806-144
SN74HC690	815-112
SN74HC691	813-10
SN74HC692	815-114
SN74HC693	813-12
SN74HC696	815-108
SN74HC697	813-14
SN74HC698	815-109
SN74HC699	813-15
SN74HC7001	824-72
SN74HC7002	827-142
SN74HC7003	825-136
SN74HC7006	842-52
SN74HC7022	816-141
SN74HC7032	826-146
SN74HC7074	838-49
SN74HC7075	842-55
SN74HC7076	842-54
SN74HC7266	828-109
SN74HC73	823-138
SN74HC7340	839-55
SN74HC7344	840-92
SN74HC74	820-36
SN74HC75	830-154
SN74HC76	823-17
SN74HC77	829-3
SN74HC78	823-105
SN74HC804	820-2
SN74HC805	820-3
SN74HC808	820-1
SN74HC832	820-4
SN74HC85	807-46
SN74HC86	828-46
SN74HC881	806-170
SN74HCT137	818-146
SN74HCT138	818-69
SN74HCT189	831-102
SN74HCT2000	837-66
SN74HCT219	831-103
SN74HCT237	818-98
SN74HCT238	818-99
SN74HCT240	839-125
SN74HCT241	840-57
SN74HCT242	838-115
SN74HCT243	838-77
SN74HCT244	840-30
SN74HCT245	841-176
SN74HCT373	830-9
SN74HCT374	822-142

Device	Page-Line
SN74HCT533	830-120
SN74HCT534	822-20
SN74HCT540	839-126
SN74HCT541	810-127
SN74HCT563	830-121
SN74HCT564	822-21
SN74HCT573	830-10
SN74HCT574	822-143
SN74HCT620	841-59
SN74HCT623	841-60
SN74HCT640	841-94
SN74HCT643	841-95
SN74HCT645	841-177
SN74HCT646	841-1
SN74HCT648	840-140
SN74HCT651	840-141
SN74HCT652	841-2
SN74HCT658	842-60
SN74HCT659	842-61
SN74HCT664	842-62
SN74HCT665	842-63
SN74HCT9510	843-99
SN74HCT9511	843-100
SN74HCT9512	843-101
SN74HCU04	811-90
SN74L164	3856-38
SN74LS00	871-37
SN74LS01	871-190
SN74LS02	874-41
SN74LS03	871-191
SN74LS04	857-127
SN74LS05	857-174
SN74LS08	869-122
SN74LS09	869-161
SN74LS10	870-154
SN74LS107A	868-18
SN74LS109A	867-138
SN74LS11	869-38
SN74LS112A	868-102
SN74LS113A	868-66
SN74LS114A	868-132
SN74LS12	870-182
SN74LS122	880-123
SN74LS123	880-158
	¶ 361-15
SN74LS125A	856-115
SN74LS126A	856-139
SN74LS13	887-127
SN74LS132	888-11
SN74LS136	874-84
SN74LS137	863-157
SN74LS138	863-128
SN74LS138	1457-144
SN74LS139A	863-28
SN74LS14	888-50
SN74LS145	862-112
SN74LS147	889-52
SN74LS148	888-164
SN74LS148	1462-79
SN74LS15	869-64
SN74LS151	880-6
SN74LS152	880-24
SN74LS153	877-152
SN74LS155A	863-92
SN74LS156	863-61
SN74LS157	879-21
SN74LS158	878-106
SN74LS160A	860-174
SN74LS161A	858-165
SN74LS162A	861-24
SN74LS163A	859-19
SN74LS164	882-18
SN74LS164	3856-61
SN74LS165A	882-60
SN74LS165A	3856-12
SN74LS166A	882-76
SN74LS166A	3856-13
SN74LS169B	859-151
SN74LS170	877-16
SN74LS170	3830-92
SN74LS171	864-319
SN74LS173A	866-23
SN74LS174	866-63
SN74LS175	864-295
SN74LS18	887-128
SN74LS181	855-68
SN74LS183	855-7
SN74LS189A	3831-106
SN74LS19	888-51
SN74LS190	861-180
SN74LS191	860-6
SN74LS192	861-149

Device	Page-Line
SN74LS193	860-49
SN74LS194A	881-145
SN74LS194A	3854-70
SN74LS195A	881-54
SN74LS195A	3854-109
SN74LS196	860-130
SN74LS197	858-110
SN74LS20	870-26
SN74LS21	868-173
SN74LS212	3832-1
SN74LS213	3832-2
SN74LS219A	3831-107
SN74LS22	870-100
SN74LS221	880-139
SN74LS222	3809-8
SN74LS224	3809-9
SN74LS227	3809-12
SN74LS228	3809-13
SN74LS24	888-12
SN74LS240	883-166
SN74LS240	2883-2
SN74LS241	884-52
SN74LS241	2882-37
SN74LS242	883-92
SN74LS242	2888-49
SN74LS243	883-93
SN74LS243	2888-50
SN74LS244	884-94
SN74LS244	2882-38
SN74LS245	885-124
SN74LS245	2890-33
SN74LS247	2875-129
SN74LS248	2875-89
SN74LS249	2875-57
SN74LS251	880-61
SN74LS251	1462-67
SN74LS253	878-58
SN74LS257B	879-60
SN74LS258B	878-147
SN74LS259B	875-150
SN74LS259B	1462-60
SN74LS26	871-132
SN74LS261	855-129
SN74LS266	874-180
SN74LS27	865-65
SN74LS273	866-161
SN74LS275	843-13
SN74LS279A	875-91
SN74LS28	874-42
SN74LS280	889-28
SN74LS283	856-64
SN74LS289A	3831-101
SN74LS290	860-98
SN74LS292	862-60
SN74LS293	859-88
SN74LS294	862-58
SN74LS295B	881-22
SN74LS295B	3854-110
SN74LS297	887-62
	¶ 361-2
	¶ 361-3
	3375-43
SN74LS298	879-120
SN74LS299	882-148
SN74LS30	872-39
SN74LS31	886-161
SN74LS319A	3831-102
SN74LS32	873-65
SN74LS320	887-60
SN74LS321	887-61
SN74LS322A	856-80
SN74LS323	882-149
SN74LS323	3855-95
SN74LS33	865-87
SN74LS347	2875-98
SN74LS348	888-171
SN74LS348	1462-80
SN74LS352	878-32
SN74LS353	877-115
SN74LS354	880-34
SN74LS355	880-31
SN74LS356	880-35
SN74LS357	880-32
SN74LS365A	857-34
SN74LS365A	2883-9
SN74LS366A	858-44
SN74LS366A	2883-15
SN74LS367A	857-35
SN74LS367A	2883-10
SN74LS368A	858-45
SN74LS368A	2883-16
SN74LS37	871-77

¶ Indicates page number in Application Note Directory.
★ Indicates additional data is provided on the page noted.

Texas Instruments (Cont'd)

Device	Page-Line
SN74LS373	876-30
SN74LS374	867-23
SN74LS375	875-59
SN74LS377	867-50
SN74LS378	866-93
SN74LS379	864-338
SN74LS38	871-115
SN74LS381A	855-69
SN74LS382	855-70
SN74LS384	855-151
SN74LS385	854-15
SN74LS386A	874-136
SN74LS390	861-57
SN74LS393	859-42
SN74LS395A	881-111
SN74LS395A	3854-111
SN74LS396	876-142
SN74LS398	879-121
SN74LS399	879-122
SN74LS40	870-70
SN74LS42	862-146
SN74LS422	880-110
SN74LS423	880-140
SN74LS440	883-104
SN74LS440	2888-7
SN74LS441	883-105
SN74LS441	2888-8
SN74LS442	883-106
SN74LS442	2888-10
SN74LS443	883-107
SN74LS443	2888-11
SN74LS444	883-108
SN74LS444	2888-12
SN74LS445	862-87
SN74LS446	883-96
SN74LS446	2888-19
SN74LS447	2875-99
SN74LS448	883-109
SN74LS448	2888-9
SN74LS449	883-97
SN74LS449	2888-20
SN74LS465	857-68
SN74LS466	858-65
SN74LS467	857-69
SN74LS468	858-66
SN74LS47	2875-130
SN74LS48	2875-90
SN74LS481	1411-20
SN74LS49	2875-58
SN74LS490	861-58
SN74LS51	872-105
SN74LS54	872-182
SN74LS540	883-167
SN74LS540	2883-3
SN74LS541	884-53
SN74LS541	2882-39
SN74LS55	872-145
SN74LS56	862-61
SN74LS57	862-62
SN74LS589	882-85
SN74LS590	859-103
SN74LS591	859-104
SN74LS592	859-100
SN74LS593	862-53
SN74LS594	882-96
SN74LS595	882-97
SN74LS596	882-98
SN74LS597	882-86
SN74LS598	882-87
SN74LS599	882-99
SN74LS600A	887-2
	¶ 441-5
SN74LS601A	887-3
	¶ 441-5
SN74LS602A	887-4
SN74LS603A	887-5
SN74LS604	875-119
SN74LS605	875-120
SN74LS606	875-121
SN74LS607	875-122
SN74LS608	2892-61
SN74LS610	887-36
	¶ 369-7
SN74LS611	887-37
	¶ 369-7
SN74LS612	887-38
	¶ 369-7
SN74LS613	887-39
	¶ 369-7
SN74LS620	886-108
SN74LS620	2890-34
SN74LS621	886-64
SN74LS621	2890-17
SN74LS622	886-65
SN74LS622	2890-18
SN74LS623	886-109
SN74LS623	2890-35
SN74LS624	887-76
SN74LS624	3376-14
SN74LS625	887-92
SN74LS625	3376-48
SN74LS626	887-93
SN74LS626	3376-49
SN74LS627	887-94
SN74LS627	3376-50
SN74LS628	887-77
SN74LS628	3376-15
SN74LS629	887-95
SN74LS629	3376-51
SN74LS63	888-21
SN74LS630	887-13
	¶ 435-11
	2878-60
SN74LS631	887-14
	¶ 435-11
	2878-61
SN74LS636	887-8
SN74LS636	2878-62
SN74LS637	887-9
SN74LS637	2878-63
SN74LS638	884-128
SN74LS638	2889-55
SN74LS639	884-129
SN74LS639	2889-56
SN74LS640	885-22
SN74LS640	2890-36
SN74LS640-1	885-23
SN74LS640-1	2890-37
SN74LS641	885-54
SN74LS641	2890-19
SN74LS641-1	885-55
SN74LS641-1	2890-20
SN74LS642	884-148
SN74LS642	2890-21
SN74LS642-1	884-149
SN74LS642-1	2890-22
SN74LS643	885-24
SN74LS643	2890-38
SN74LS643-1	885-25
SN74LS643-1	2890-39
SN74LS644	885-144
SN74LS644	2890-23
SN74LS644-1	885-145
SN74LS644-1	2890-24
SN74LS645	885-125
SN74LS645	2890-40
SN74LS645-1	885-126
SN74LS645-1	2890-41
SN74LS646	886-24
SN74LS646	2891-8
SN74LS647	885-167
SN74LS647	2890-53
SN74LS648	886-25
SN74LS648	2891-9
SN74LS649	885-168
SN74LS649	2890-54
SN74LS651	885-26
SN74LS651	886-26
SN74LS652	885-27
SN74LS652	886-27
SN74LS653	885-152
SN74LS654	885-155
SN74LS668	861-108
SN74LS669	859-152
SN74LS670	877-29
SN74LS670	3830-104
SN74LS671	881-112
SN74LS672	881-113
SN74LS673	883-27
SN74LS674	883-14
SN74LS68	861-60
SN74LS681	855-169
SN74LS682	854-147
SN74LS683	854-128
SN74LS684	854-148
SN74LS685	854-129
SN74LS686	854-149
SN74LS687	854-130
SN74LS688	854-150
SN74LS689	854-131
SN74LS69	859-43
SN74LS690	861-25
SN74LS691	858-115
SN74LS692	861-26
SN74LS693	858-116
SN74LS696	861-67
SN74LS697	859-107
SN74LS698	861-68
SN74LS699	859-108
SN74LS73A	868-19
SN74LS74A	864-250
SN74LS75	875-60
SN74LS76A	868-42
SN74LS78A	867-150
SN74LS83A	856-65
SN74LS85	854-71
SN74LS86A	874-137
SN74LS90	860-99
SN74LS91	882-108
SN74LS91	3856-76
SN74LS92	862-29
SN74LS93	859-89
SN74LS95B	881-85
SN74LS95B	3854-71
SN74LS96	881-161
SN74LS96	3855-53
SN74PL839	4473-66
SN74PL840	4473-63
SN74S00	871-46
SN74S02	874-50
SN74S03	871-200
SN74S04	857-136
SN74S05	857-182
SN74S08	869-131
SN74S09	869-165
SN74S10	870-163
SN74S11	869-46
SN74S112	868-111
SN74S113	868-74
SN74S114	868-135
SN74S124	3376-52
SN74S132	888-16
SN74S133	872-71
SN74S134	872-53
SN74S135	874-58
SN74S138	863-138
SN74S139	863-37
SN74S140	864-15
SN74S140	2883-36
SN74S15	869-70
SN74S151	880-16
SN74S153	878-2
SN74S157	879-31
SN74S158	878-114
SN74S162	861-28
SN74S163	859-23
SN74S168	861-110
SN74S169	859-156
SN74S174	866-72
SN74S175	864-304
SN74S181	855-79
SN74S182	855-120
SN74S189B	3831-57
SN74S194	881-150
SN74S194	3854-121
SN74S195	881-61
SN74S195	3854-122
SN74S196	860-132
SN74S197	858-112
SN74S20	870-34
SN74S22	870-106
SN74S225	877-73
SN74S225	3809-15
SN74S226	888-98
SN74S226	2888-36
SN74S240	884-1
SN74S240	2883-4
SN74S241	884-57
SN74S241	2882-40
SN74S244	2882-41
SN74S251	880-70
SN74S253	878-66
SN74S257	879-68
SN74S258	878-156
SN74S260	865-33
SN74S268	875-124
SN74S274	855-135
SN74S280	889-41
SN74S281	855-172
SN74S283	856-67
SN74S289B	3831-51
SN74S299	882-153
SN74S299	3855-97
SN74S30	872-45
SN74S301	3832-74
SN74S32	873-74
SN74S330	4474-49
SN74S331	4474-48
SN74S350	843-130
SN74S37	871-81
SN74S370	3849-4
SN74S373	876-39
SN74S374	867-35
SN74S38	871-119
SN74S381	855-80
SN74S40	870-78
SN74S412	875-155
SN74S412	1457-182
SN74S428	1457-193
SN74S436	864-119
SN74S436	2893-15
SN74S437	864-120
SN74S437	2893-16
SN74S481	1411-21
SN74S482	887-56
SN74S482	1449-105
SN74S484A	3808-31
SN74S485A	3808-28
SN74S51	872-114
SN74S64	873-14
SN74S65	873-21
SN74S74	864-258
SN74S85	854-79
SN74S86	874-144
SN74THCT1010-100	808-18
SN74THCT1010-140	808-19
SN74THCT4501	3829-36
SN74THCT4502	2892-76
SN74THCT9510	808-20
SN74THCT9520	837-131
SN74THCT9521	837-132
SN75064	2897-148
SN75065	2898-43
SN75066	2897-149
SN75067	2898-44
SN75068	2897-150
SN75069	2898-45
SN75107A	2886-25
SN75107B	2886-38
SN75108A	2886-31
SN75108B	2886-43
SN75109A	2883-48
SN75110A	2883-52
SN75112	2883-53
SN75113	2883-44
SN75114	2883-26
SN75115	2887-2
SN75116	2891-30
SN75117	2891-36
SN75118	2891-32
SN75119	2891-34
SN75121	2881-9
SN75122	2885-16
SN75123	2881-3
SN75124	2885-12
SN75125	2886-1
SN75126	2881-33
SN75127	2886-2
SN75128	2886-9
SN75129	2886-10
SN75130	2881-34
SN75136	888-67
SN75136	2889-1
SN75138	2889-47
SN75140A	2885-4
SN75141	2885-5
SN75142A	2885-2
SN75143A	2885-3
SN75150	2881-18
SN75151	2884-23
SN75152	2887-12
SN75153	2884-24
SN75154	2885-51
SN75157	2886-52
SN75158	2883-27
SN75159	2883-46
SN75160B	2891-11
SN75161B	2891-12
SN75162B	2891-13
SN75163B	2891-14
SN75172	2884-27
SN75173	2887-42
SN75174	2884-28
SN75175	2887-43
SN75176B	2891-25
SN75177B	2891-26
SN75178B	2891-27
SN75179B	2891-28
SN75182	2887-6
SN75183	2883-37
SN75188	2881-49
SN75189	2885-26
SN75189A	2885-41
SN75207	2886-14
SN75207	2899-16
SN75207B	2886-17
SN75208	2886-15
SN75208	2899-17
SN75208B	2886-18
SN75234	2899-8
SN75261	¶ 439-5
SN75270	886-147
SN75325	2892-43
SN75326	2892-48
SN75327	2892-49
SN75350	2892-125
SN75361A	2892-126
SN75363	2892-106
SN75365	2892-142
	¶ 439-5
SN75367	886-141
SN75367	2893-7
SN75369	2892-120
SN75407	2897-49
SN75407	2897-81
SN75408	2897-111
SN75426B	2876-36
SN75427B	2876-37
SN75430	2892-107
SN75431	2892-108
SN75432	2897-50
SN75433	2897-112
SN75434	2897-82
SN75435	2898-64
SN75436	2898-54
SN75437A	2898-55
SN75438	2898-56
SN75440	2898-57
SN75441	2896-112
SN75441	2897-118
SN75446	2897-19
SN75447	2897-51
SN75448	2897-113
SN75449	2897-83
SN75450B	2897-9
SN75451B	2897-10
SN75452B	2897-52
SN75453B	2897-114
SN75454B	2897-84
SN75460	2897-11
SN75461	2897-12
SN75462	2897-53
SN75463	2897-115
SN75464	2897-85
SN75465	3310-83
SN75466	2894-118
SN75466	2897-13
SN75466	3310-142
SN75467	2894-136
SN75467	3310-143
SN75468	2894-100
SN75468	3310-84
SN75469	2894-71
SN75469	3310-85
SN75470	2897-14
SN75471	2897-15
SN75472	2897-54
SN75473	2897-116
SN75474	2897-86
SN75476	2897-16
SN75477	2897-60
SN75478	2897-117
SN75478	2897-121
SN75479	2897-87
SN75479	2897-90
SN75480	2877-18
SN75490	2896-104
SN75491	2876-106
SN75491A	2876-107
SN75492	2876-142
SN75492A	2876-143
SN75494	2876-144
SN75497	2877-10
SN75498	2877-69
SN75500A	2877-102
SN75500D	2877-103
SN75501C	2877-104
	¶ 398-4
SN75512A	2877-83
	¶ 398-4
SN75513A	2877-84
	¶ 398-4
SN75514	2877-85
SN75518	2877-105
SN75551	2874-48
SN75552	2874-42
SN75553	2874-45
SN75554	2874-39
SN75555	2874-35
SN75556	2874-36
SN75581	2877-12
SN75584A	2877-13
SN75590	2896-105
SN75603	2895-113
SN75604	2895-114
SN75605	2895-115
SN75ALS195	2887-44
SN75ALS195	2887-45
SN75AS869	¶ 356-17
SN75LS192	2884-22
SN76000	3318-79
SN76002	3318-80
SN76005	3318-20
SN76011	3318-81
SN76021	3318-82
SN76024	3318-83
SN76104	3322-142
SN76105	3322-143
SN76110	3322-144
SN76111	3322-145
SN76113	3322-146
SN76115	3322-147
SN76116	3322-148
SN76130	3319-62
SN76131	3319-63
SN76149	3319-64
SN76242	3325-39
SN76243	3325-40
SN76246	3325-41
SN76267	3325-42
SN76298	3325-43
SN76333	3399-86
SN76334	3399-87
SN76477	3327-114
SN76477	1468-52
SN76487	3319-90
SN76488	3319-91
SN76489	3319-84
SN76489A	3319-85
SN76493	3319-86
SN76494	3319-87
SN76495	3319-88
SN76524	3326-26
SN76525	3325-137
SN76544	3326-27
SN76545	3326-28
SN76565	3324-56
SN76566	3398-115
SN76600	3327-89
SN76605	3323-79
SN76606	3323-80
SN76635	3321-43
SN76642	3322-44
SN76643	3322-45
SN76643	3326-74
SN76644	3327-90
SN76645	3325-44
SN76650	3327-91
SN76651	3326-75
SN76660	3326-76
SN76665	3326-77
SN76666	3326-78
SN76669	3322-46
SN76675	3322-47
SN76676	3321-146
SN76678	3321-147
SN76688	3326-79
SN76689	3322-48
SN76701	3324-114
SN76702	3324-115
SN76710	3324-116
SN76711	3324-117
SN76720	3326-11
SN76721	3324-118
SN76727	3324-119
SN76730	3323-81
SN76810	3328-51
SN76811	891-118

Arranged alphanumerically from left to right.

ADVERTISERS' PRODUCT INDEX

Texas Instruments (Cont'd)

Device	Page-Line
SN76812	3383-7
SN76831	3323-82
SN76832	¶ 420-10
SN76832A	3323-83
SN76881	3323-84
	¶ 420-10
SN76882	3323-85
	¶ 420-10
SN76889	3325-45
SN76891	3323-86
	¶ 420-10
SN76940	3381-83
SPB9708	843-39
SPB9901	1464-78
T132008	1439-14
T132016	1439-15
T132016-XDS	1821-16
T132032-XDS	1821-17
T132032D	1439-16
T132032T	1439-17
T132081	1439-18
TAC1275H	4456-15
TAC2000H	4456-16
TAC2600VH	4456-17
TAC3900H	4456-19
TAC3900VH	4456-18
TAC440H	4456-13
TAC770H	4456-14
TAC8000VH	4456-20
TBP18S030	★ 729
	3814-43
TBP18S030M	★ 729
	3814-57
TBP18SA030	3814-41
TBP18SA030	3814-52
TBP24S10	★ 729
	3814-111
TBP24S10M	★ 729
	3814-122
TBP24S41	3816-99
TBP24S81	3818-12
TBP24S86M	3817-138
TBP24SA10	3814-120
TBP24SA41	3816-98
TBP24SA81	3818-11
TBP28L166	3819-57
TBP28L22	★ 729
	3815-19
TBP28L22M	★ 729
	3815-20
TBP28L42	★ 729
	3816-23
TBP28L46	3816-67
TBP28L86A	★ 729
	3817-140
TBP28L86M	★ 729
	3817-141
TBP28LA22	3815-17
TBP28R165	3817-163
TBP28S166	3818-81
TBP28S2708A	3817-139
TBP28S42	★ 729
	3816-36
TBP28S42M	★ 729
	3816-54
	3816-55
	3816-62
	3816-63
TBP28S46	3816-42
TBP28S46M	3816-59
TBP28S86A	3817-118
TBP28SA42	3816-45
TBP28SA46	3816-48
TBP28SA86A	3817-119
TBP28SA86A-50	3819-6
TBP34L10	★ 4232
	3814-68
TBP34L162	★ 729
TBP34L162	★ 4236
	3819-115
TBP34L16X-25	★ 4236
	3819-116
TBP34R16	★ 4231
	3819-100
TBP34R162	3819-102
TBP34S10-25	★ 4232
	3814-67

Device	Page-Line
TBP34S162-25	★ 729
TBP34S162-25	★ 4236
	3819-103
TBP34S162-45	★ 729
TBP34S162-45	★ 4236
	3820-7
TBP34S165	3820-30
TBP34S166	3820-31
TBP34S16X-25	★ 4236
	3819-112
TBP34SA10-25	★ 4232
	3814-69
TBP34SA162	★ 4236
	3819-106
TBP34SA165	3820-28
TBP34SA166	3820-29
TBP34SA16X-25	★ 4236
	3819-107
TBP34SR16	★ 4240
	3819-101
TBP34SR165	3820-26
TBP34SR166	3820-27
TBP38L030	★ 4243
	3814-12
TBP38L16	★ 4247
TBP38L165-35	★ 729
TBP38L165-35	★ 4247
	3819-96
TBP38L165-45	★ 729
TBP38L165-45	★ 4247
	3819-98
TBP38L166	★ 4247
	3818-99
TBP38L22-35	3815-1
TBP38L42	★ 4259
	3815-78
TBP38L8	★ 4242
	3817-55
TBP38L85	3817-56
TBP38R165	3818-58
TBP38R165-18	3819-94
TBP38R165-20	3819-95
TBP38R16X	★ 4249
	3818-59
TBP38S030-15	★ 729
	3814-10
TBP38S030-25	★ 729
	3814-22
TBP38S030-30	★ 729
	3814-28
TBP38S03X-25	★ 4243
	3814-23
TBP38S165-25	★ 729
	3818-76
TBP38S165-30	★ 729
	3818-80
TBP38S165-35	★ 729
	3819-97
TBP38S166	3818-62
TBP38S166-25	3818-77
TBP38S166-30	3818-79
TBP38S16X-25	★ 4252
	3818-78
TBP38S16X-30	★ 4252
	3818-71
TBP38S22-18	★ 4256
	3815-2
TBP38S2X-18	★ 4256
	3815-3
TBP38S2X-25	★ 4256
	3815-4
TBP38S42	★ 4259
	3815-71
TBP38S8	★ 4242
	3817-57
TBP38S85	3817-58
TBP38SA030-25	★ 4243
	3814-11
TBP38SA165	★ 4254
	3818-68
TBP38SA166	★ 4254
	3818-69
TBP38SA16X	★ 4254
	3818-70
TBP38SA2	★ 4256
TBP38SA22-25	★ 4256
	3819-99
TBP38SA42	★ 4259
	3815-73
TBP38SA8	★ 4242
	3817-46
TBP38SA85	3817-47

Device	Page-Line
TBP38S030	★ 4243
TBPL16X-35	3818-100
TBPL16X-45	3818-119
TC101	3400-60
TC102	3400-49
TC103	3400-65
TC104	3400-67
TC201	3400-4
TC202	3400-5
TCM1501A	3382-41
	¶ 411-9
TCM1505A	¶ 411-9
TCM1506A	3382-42
	¶ 411-9
TCM1512A	3382-43
	¶ 411-9
TCM1520A	3381-17
TCM1520A	3382-44
	¶ 411-9
TCM1705A	¶ 413-18
TCM1706	¶ 413-18
TCM2203A	3379-94
TCM2204A	3379-95
TCM2222	3379-93
TCM2910A	3377-153
TCM2911A	3377-55
TCM2912B	3379-77
TCM2913	3377-94
TCM2914	3377-95
TCM2916	3377-96
TCM2916	3377-133
TCM2917	3377-71
TCM2917	3377-97
TCM3101	3379-113
	¶ 413-11
TCM3105	3379-114
TCM4110	3377-154
TCM4204	3381-74
TCM4205	3381-75
TCM4207	3381-76
TCM4910	3377-155
TCM4913	3377-98
TCM4914	3377-99
TCM4916	3377-100
TCM4916	3377-134
TCM4917	3377-72
TCM4917	3377-101
TCM5087	3382-96
TCM5089	3382-97
TCM 2101	¶ 412-17
TCM 2102	¶ 412-17
THCT1010	★ 1336
	843-102
THCT1011	★ 1343
THCT2000	★ 1355
THCT29520	★ 1350
THCT4502	★ 1314
THCT9510	843-103
THCT9510E	808-21
THCT9510M	808-22
THCT9510M	808-23
THCTPAL1618	★ 4797
THCTPAL16L8	4473-22
THCTPAL16R4	★ 4797
	4473-23
THCTPAL16R6	★ 4797
	4473-24
THCTPAL16R8	★ 4797
	4473-25
TI32000 family	¶ 377-17
TI32008	1464-104
TI32016	1464-105
TI32032	1464-106
TI32081	1464-101
	¶ 381-18
TI32082	1464-103
TI32201	1464-107
TI32202	1464-102
TI Des Sys	5066-55
TIB0203S	3857-62
TIB82S104A	4474-61
TIB82S105A	★ 4788
	4474-63
TIB82S167B	★ 4792
	4474-51
TIBPAL12H10	4469-32
TIBPAL12L10	4469-33
TIBPAL12P10	4469-34
TIBPAL14H8	4469-35
TIBPAL14L8	4469-36
TIBPAL14P8	4469-37
TIBPAL16H6	4469-38

Device	Page-Line
TIBPAL16H8	4469-39
TIBPAL16HD8	4469-40
TIBPAL16L6	4469-41
TIBPAL16L8-15	★ 725
TIBPAL16L8-15	★ 4759
	4469-80
TIBPAL16L8-25	★ 725
TIBPAL16L8-25	★ 4759
	4470-57
TIBPAL16LD8	4469-42
TIBPAL16P6	4469-43
TIBPAL16R4-15	★ 725
TIBPAL16R4-15	★ 4759
	4469-81
TIBPAL16R4-25	★ 725
TIBPAL16R4-25	★ 4759
	4470-58
TIBPAL16R6-15	★ 725
TIBPAL16R6-15	★ 4759
	4469-82
TIBPAL16R6-25	★ 725
TIBPAL16R6-25	★ 4759
	4470-59
TIBPAL16R8-15	★ 725
TIBPAL16R8-15	★ 4759
	4469-83
TIBPAL16R8-25	★ 725
TIBPAL16R8-25	★ 4759
	4470-60
TIBPAL18H4	4469-44
TIBPAL18L4	4469-45
TIBPAL18P4	4469-46
TIBPAL19R8-XX	4469-84
TIBPAL20H2	4469-47
TIBPAL20L10-XX	★ 725
TIBPAL20L10-XX	★ 4766
	4469-57
	4470-62
TIBPAL20L2	4469-48
TIBPAL20P2	4469-49
TIBPAL20X10-XX	★ 725
TIBPAL20X10-XX	★ 4766
	4469-58
TIBPAL20X4-XX	★ 725
TIBPAL20X4-XX	★ 4766
	4469-59
TIBPAL20X8-XX	★ 725
TIBPAL20X8-XX	★ 4766
	4469-60
TIBPALR19L8-XX	★ 725
TIBPALR19L8-XX	★ 4770
	4469-85
TIBPALR19R4-XX	★ 725
TIBPALR19R4-XX	★ 4770
	4469-86
TIBPALR19R6-XX	★ 725
TIBPALR19R6-XX	★ 4770
	4469-87
TIBPALR19R8-XX	★ 725
TIBPALR19R8-XX	★ 4770
	4469-88
TIBPALT19L8-XX	★ 725
TIBPALT19L8-XX	★ 4779
	4469-89
TIBPALT19R4-XX	★ 725
TIBPALT19R4-XX	★ 4779
	4469-90
TIBPALT19R6-XX	★ 725
TIBPALT19R6-XX	★ 4779
	4469-91
TIBPALT19R8-XX	★ 725
TIBPALT19R8-XX	★ 4779
	4469-92
TIED460	3399-88
TIED461	3399-89
TIED462	3399-90
TIED463	3399-91
TIFPLA839C	★ 4794
	4473-67
TIFPLA839M	★ 4794
	4473-68
TIFPLA840C	★ 4794
	4473-64
TIFPLA840M	★ 4794
	4473-65
TIM8228	1457-194
TIM8238	1457-195
TIM9904	1462-66
TIM9905	1462-68
TIM9906	1462-61
TIM9907	1462-78
TIM9908	1462-81

Device	Page-Line
TL011	¶ 418-5
TL012	¶ 418-5
TL014	¶ 418-5
TL021	¶ 418-5
TL061M	★ 718
	3354-50
TL062M	★ 718
	3366-36
TL064M	★ 719
	3373-11
TL071M	★ 718
	3354-46
TL072M	★ 718
	3366-33
TL074M	3372-12
TL081	★ 718
TL082M	★ 718
	3366-43
TL083M	3366-44
TL084M	★ 719
	3372-22
TL170C	891-91
TL288	★ 718
TL294	★ 719
TL431	★ 720
TL441M	★ 720
	3307-16
TL4810A	¶ 398-4
TL494M	★ 720
	3397-1
TL497A	¶ 427-3
TL497AM	★ 720
	3397-2
TL506M	★ 719
	3314-3
TL510	★ 719
TL514M	★ 719
	3313-43
TL594M	★ 720
	3397-3
TL710	★ 719
TL810M	3312-26
TL811M	3314-9
TL820M	3313-44
TLC252C	3334-104
TLC25M4BC	3371-6
TLC271AM	★ 718
	3351-1
	3351-2
TLC271BM	★ 718
	3345-25
	3345-26
TLC271M	★ 718
	3334-92
	3350-51
	3356-57
TLC272AC	★ 718
	3363-102
TLC272AM	★ 718
	3363-103
TLC272BC	★ 718
	3362-33
TLC272BM	★ 718
	3362-34
TLC272C	★ 718
	3334-106
	3368-9
TLC272M	★ 718
	3334-136
	3368-10
TLC274AM	★ 719
	3371-7
TLC274BM	★ 719
	3370-5
TLC274M	★ 719
	3334-180
	3373-15
TLC27L2AC	★ 718
	3363-98
TLC27L2AM	★ 718
	3363-99
TLC27L2BC	★ 718
	3362-29
TLC27L2BM	★ 718
	3362-30
TLC27L2C	★ 718
	3368-5
TLC27L2M	★ 718
	3368-6
TLC27L4AM	★ 719
	3371-4

Device	Page-Line
TLC27L4BM	★ 719
	3370-4
TLC27L4M	★ 719
	3373-13
TLC27M2AC	★ 718
	3363-100
TLC27M2AM	★ 718
	3363-101
TLC27M2BC	★ 718
	3362-31
TLC27M2BM	★ 718
	3362-32
TLC27M2C	★ 718
	3368-7
TLC27M2M	★ 718
	3368-8
TLC27M4BM	★ 719
	3371-5
TLC27M4M	★ 719
	3373-14
TLC372M	★ 719
	3315-11
TLC374M	★ 719
	3316-49
TLC532AM	★ 720
	2834-37
TLC533AM	★ 720
	2834-47
TLC540M	★ 720
	2834-33
TLC541M	★ 720
	2834-34
TLC548C	2837-22
TLC548M	2837-23
TLC549C	2837-24
TLC549M	2834-44
TLC555M	★ 720
	3383-55
TLC556M	★ 720
	3383-73
TM4161EP5-15	★ 4203
	3828-20
TM4161EP5-20	★ 4203
	3828-22
TM4161EV4-15	★ 4202
	3828-16
TM4161EV4-200	★ 4202
	3828-17
TM4161GW4-15	★ 4204
	3827-130
TM4161GW4-20	★ 4204
	3828-12
TM4161GY4-15	★ 4204
	3827-131
TM4161GY4-20	★ 4204
	3828-13
TM4164EC4-12	★ 4206
	3827-105
TM4164EC4-15	★ 4206
	3827-122
TM4164EC4-20	★ 4206
	3828-7
TM4164EL9-12	★ 4205
	3828-43
TM4164EL9-15	★ 4205
	3828-46
TM4164EL9-20	★ 4205
	3828-51
TM4164EQ5-12	★ 4207
	3828-18
TM4164EQ5-15	★ 4207
	3828-19
TM4164EQ5-20	★ 4207
	3828-21
TM4164EV4-15	3828-3
TM4164EV4-20	3828-14
TM4164FL8-12	★ 4208
	3828-25
TM4164FL8-15	★ 4208
	3828-32
TM4164FL8-20	★ 4208
	3828-38
TM4164FM8-12	★ 4208
	3828-26
TM4164FM8-15	★ 4208
	3828-33
TM4164FM8-20	★ 4208
	3828-39
TM4164FM9-12	★ 4205
	3828-44
TM4164FM9-15	★ 4205
	3828-47

¶ Indicates page number in Application Note Directory.
★ Indicates additional data is provided on the page noted.

Texas Instruments (Cont'd)

Device	Page-Line
TM4164FM9-20	★ 4205 3828-52
TM4256EC4-12	★ 4193 3829-87
TM4256EC4-15	★ 4193 3829-94
TM4256EC4-20	★ 4193 3829-96
TM4256EL9-12	★ 4191 3830-10
TM4256EL9-15	★ 4191 3830-18
TM4256EL9-20	★ 4191 3830-26
TM4256EQ5-12	★ 4194 3826-15
TM4256EQ5-15	★ 4194 3826-16
TM4256EQ5-20	★ 4194 3826-17
TM4256FC1-15	★ 4195 3830-69
TM4256FC1-20	★ 4195 3830-73
TM4256FL8-12	★ 4196 3829-103
TM4256FL8-15	★ 4196 3829-110
TM4256FL8-20	★ 4196 3830-1
TM4256GP8-12	★ 4201 3829-104
TM4256GP8-15	★ 4201 3829-111
TM4256GP8-20	★ 4201 3830-2
TM4256GP9-12	★ 4200 3830-11
TM4256GP9-15	★ 4200 3830-19
TM4256GP9-20	★ 4200 3830-27
TM4256GU8-12	★ 4196 3826-18
TM4256GU8-15	★ 4196 3826-19
TM4256GU8-20	★ 4196 3826-20
TM4256GU9-12	★ 4191 3826-21
TM4256GU9-15	★ 4191 3826-22
TM4256GU9-20	★ 4191 3826-23
TM4256GV8-12	★ 4201 3829-105
TM4256GV8-15	★ 4201 3829-112
TM4256GV8-20	★ 4201 3830-3
TM4256GV9-12	★ 4200 3830-12
TM4256GV9-15	★ 4200 3830-20
TM4256GV9-20	★ 4200 3830-28
TM4256HE4-12	★ 4197 3826-24
TM4256HE4-15	★ 4197 3826-25
TM4256HE4-20	★ 4197 3826-26
TM4257EC4-12	★ 4193 3829-88
TM4257EC4-15	★ 4193 3829-95
TM4257EC4-20	★ 4193 3829-97
TM4257EL9-12	★ 4191 3830-13
TM4257EL9-15	★ 4191 3830-21
TM4257EL9-20	★ 4191 3830-29
TM4257EQ5-12	★ 4194 3829-99
TM4257EQ5-15	★ 4194 3829-100
TM4257EQ5-20	★ 4194 3829-101
TM4257FC1-12	★ 4195 3830-59
TM4257FC1-15	★ 4195 3830-70
TM4257FC1-20	★ 4195 3830-74
TM4257FL8-12	★ 4196 3829-106
TM4257FL8-15	★ 4196 3829-113
TM4257FL8-20	★ 4196 3830-4
TM4257G48-12	3829-107
TM4257G48-15	3829-114
TM4257G48-20	3830-5
TM4257G49-12	3830-14
TM4257G49-15	3830-22
TM4257G49-20	3830-30
TM4257GU8	★ 4196
TM4257GU9	★ 4191
TM4464LU8-12	★ 4199 3828-27
TM4464LU8-15	★ 4199 3828-34
TM990	¶ 385-1
TM990	¶ 385-6
TM990	¶ 385-8
TM990	¶ 385-9
TM990	¶ 385-10
TM990	¶ 385-11
TM990/1481	2027-8
TM990/201	2042-64
TM990/202	2042-63
TM990/203A	2042-66
TM990/204	2042-65
TM990/303B	2042-50
TM990/304	2042-62
TM990/307	2042-67
TM990/308	2042-69
TM990/309	2042-56
TM990/310	2042-59
TM990/311	2042-60
TM990/314	2042-51
TM990/315	2042-58
TM990/317	2042-68
TM990/959	2042-57
TM990/u89	¶ 385-3
TM9900/100MA	2025-23
TM9900/101MA	2025-24
TM9900/102	2027-7
TM9995	1462-52
TMC4C1027-15	3830-64
TMS1000	1451-76 ¶ 367-5 ¶ 381-17 1413-23
TMS1070	1451-77
TMS1070	1413-24
TMS1100	1451-78
TMS1100	1413-25
TMS1170	1413-26
TMS1200C	1413-27
TMS1270	1451-79
TMS1270	1413-28
TMS1370	1413-29
TMS1400	1413-30
TMS1470	1413-31
TMS1600	1413-32
TMS1670	1413-33
TMS1700	1413-34
TMS2150	★ 1323 876-130 ¶ 438-6
TMS2150-4	★ 1323 3398-96 ★ 1323 3834-27
TMS2150-5	★ 1323 3398-97 ★ 1323 3834-28
TMS2332-15	★ 4229 3849-76
TMS2332-20	★ 4229 3849-87
TMS2332-25	★ 4229 3849-95
TMS2364-15	★ 4228 3850-51
TMS2364-25	★ 4228 3851-7
TMS2516	¶ 441-19
TMS2516-35	★ 4216 3819-77
TMS2516-45	★ 4216 3819-88
TMS2532	¶ 436-10
TMS2532	¶ 441-19
TMS2532-30	★ 4215 3820-90
TMS2532-35	★ 4215 3820-98
TMS2532-45	★ 4215 3820-107
TMS2732	★ 4214 1451-86
TMS2732A-17	★ 4214 3820-71
TMS2732A-20	★ 4214 3820-75
TMS2732A-25	★ 4214 3820-82
TMS2732A-45	★ 4214 3820-108
TMS2764-17	★ 4213 3821-80
TMS2764-20	★ 4213 3821-105
TMS2764-25	★ 4213 3822-20
TMS2764-45	★ 4213 3822-75
TMS2791	1467-39
TMS2793	1467-40
TMS2795	1467-41
TMS2797	1467-42
TMS27C128	★ 4210 3823-21
TMS27C128-1	★ 4210 3822-93
TMS27C128-15	★ 4210 3822-94
TMS27C128-2	★ 4210 3822-104
TMS27C128-20	★ 4210 3822-105
TMS27C128-25	★ 4210 3823-22
TMS27C128-3	★ 4210 3823-47
TMS27C128-30	★ 4210 3823-48
TMS27C128-4	★ 4210 3823-66
TMS27C128-45	★ 4210 3823-67
TMS27C256	★ 726
TMS27C256	★ 4209 3823-23
TMS27C256-1	★ 726
TMS27C256-1	★ 4209 3822-98
TMS27C256-17	★ 726
TMS27C256-17	★ 4209 3822-99
TMS27C256-2	★ 726
TMS27C256-2	★ 4209 3822-106
TMS27C256-20	★ 726
TMS27C256-20	★ 4209 3823-1
TMS27C256-25	★ 726
TMS27C256-25	★ 4209 3824-41
TMS27C256-3	★ 726
TMS27C256-3	★ 4209 3824-65
TMS27C256-30	★ 726
TMS27C256-30	★ 4209 3824-66
TMS27C256-4	★ 726
TMS27C256-4	★ 4209 3824-81
TMS27C256-45	★ 726
TMS27C256-45	★ 4209 3824-82
TMS27C512	★ 4211
TMS27C64-17	★ 4212 3821-78
TMS27C64-20	★ 4212 3821-93
TMS27C64-25	★ 4212 3822-7
TMS27C64-30	★ 4212 3822-35
TMS27C64-45	★ 4212 3822-61
TMS27P32A-25	★ 4217 3820-84
TMS27P32A-30	★ 4217 3820-91
TMS27P32A-45	★ 4217 3820-111
TMS27P64-25	★ 4218 3822-24
TMS27P64-30	★ 4218 3822-50
TMS27P64-45	★ 4218 3822-77
TMS320	★ 730 844-64
TMS32010	844-65
TMS32020	844-66
TMS34061	2892-33
TMS34061	1465-70
TMS34061	1466-42
TMS34070	2849-10
TMS34070	1466-33
TMS4116	¶ 440-11
TMS4116-15	★ 4187
TMS4116-15	★ 4190 3826-63
TMS4116-20	★ 4187
TMS4116-20	★ 4190 3826-78
TMS4116-25	★ 4187
TMS4116-25	★ 4190 3826-89
TMS4161	¶ 437-8
TMS4161	¶ 437-12
TMS4161	¶ 438-18
TMS4161	¶ 439-6
TMS4161	¶ 440-2
TMS4161	¶ 441-2
TMS4161	¶ 441-12
TMS4161-15	★ 726
TMS4161-15	★ 4182 3827-95
TMS4161-20	★ 726
TMS4161-20	★ 4182 3827-97
TMS4164	¶ 437-11
TMS4164	¶ 437-13
TMS4164	¶ 437-14
TMS4164	¶ 440-11
TMS4164	¶ 440-12
TMS4164	¶ 440-13
TMS4164	¶ 440-14
TMS4164	¶ 440-18
TMS4164-12	★ 726
TMS4164-12	★ 4186 3827-40
TMS4164-15	★ 726
TMS4164-15	★ 4186 3827-69
TMS4164-20	★ 726
TMS4164-20	★ 4186 3827-89
TMS4164A	¶ 440-15
TMS4256	¶ 437-17
TMS4256	¶ 438-7
TMS4256	¶ 440-16
TMS4256-12	★ 726
TMS4256-12	★ 4180 3829-21
TMS4256-15	★ 726
TMS4256-15	★ 4180 3829-57
TMS4256-20	★ 726
TMS4256-20	★ 4180 3829-74
TMS4257-12	★ 4180 3829-22
TMS4257-15	★ 4180 3829-58
TMS4257-20	★ 4180 3829-75
TMS4416	¶ 431-18
TMS4416	¶ 440-14
TMS4416	¶ 440-15
TMS4416	¶ 440-17
TMS4416	¶ 440-18
TMS4416	¶ 440-19
TMS4416-12	★ 4185 3826-99
TMS4416-15	★ 4185 3826-104 ¶ 440-21
TMS4416-20	★ 4185 3826-108
TMS4464	¶ 442-20
TMS4464-12	★ 726
TMS4464-12	★ 4181 3827-114
TMS4464-15	★ 726
TMS4464-15	★ 4181 3827-128
TMS4464-20	★ 726
TMS4464-20	★ 4181 3828-11
TMS4500A	★ 1328 2892-77 ¶ 372-11 ¶ 372-12 ¶ 372-14 ¶ 372-15 ¶ 432-1 ¶ 432-2 ¶ 432-3 ¶ 440-19
TMS4500A-15	★ 1328 2892-78
TMS4500A-20	★ 1328 2892-79
TMS4500A-25	★ 1328 2892-80
TMS47128-20	★ 4225 3852-10
TMS47128-25	★ 4225 3852-37
TMS47128-35	★ 4225 3852-56
TMS47256-20	★ 4224 3852-111
TMS47256-25	★ 4224 3853-10
TMS47256-35	★ 4224 3853-24
TMS4732	¶ 441-19
TMS4732-15	★ 4227 3849-77
TMS4732-20	★ 4227 3849-88
TMS4732-25	★ 4227 3849-96
TMS4764-15	★ 4226 3850-49
TMS4764-20	★ 4226 3850-70
TMS4764-25	★ 4226 3850-117
TMS47C1024-25	★ 4223 3853-88
TMS47C1024-30	★ 4223 3853-95
TMS47C128-15	3851-113
TMS47C128-20	3851-126
TMS47C128-25	3852-22
TMS47C256-15	★ 4221 3852-82
TMS47C256-20	★ 4221 3852-97
TMS47C256-25	★ 4221 3852-125
TMS47C512-20	★ 4222 3853-47
TMS47C512-25	★ 4222 3853-52
TMS47C522-30	3853-57
TMS5100	3323-127
TMS5110	3323-128
TMS5200	3323-129
TMS5220	3323-130
TMS5501	1457-214 ¶ 381-17 ¶ 382-3
TMS6100	3323-148
TMS6125	3323-149
TMS7000	1470-81
TMS7000	1431-7
TMS7002	1431-8
TMS7020	1470-84
TMS7020	1431-9
TMS7040	1470-37
TMS7040	1470-85
TMS7040	1431-10
TMS7041	1470-88
TMS7041	1431-11
TMS7042	1431-12
TMS70C00	1470-77
TMS70C20	1470-78
TMS70C40	1470-38
TMS70C40	1470-86
TMS70C42	1431-13
TMS7500	1470-94
TMS7500	1431-14
TMS75C00	1470-95
TMS75C00	1431-15
TMS7742	1431-16
TMS8080	¶ 381-17
TMS8080A	¶ 382-3
TMS9118	1466-26
TMS9128	1466-27
TMS9129	1466-28
TMS9900	1462-54 ¶ 365-19 ¶ 366-1 ¶ 367-6 ¶ 380-12 ¶ 381-17 ¶ 382-4 1437-13
TMS9900-40	1462-55
TMS9900-40	1437-14
TMS9901	★ 731 1462-83
TMS9902A	1462-63
TMS9903	1462-85
TMS99105A	1462-58
TMS99105A	1437-15
TMS99110A	1462-59
TMS99110A	1437-16
TMS9914A	★ 729 1462-72
TMS9923	1465-31
TMS9927	¶ 365-19
TMS9927	¶ 368-1
TMS9940	¶ 367-18
TMS99531	1462-84
TMS99532	3380-16
TMS99532	1462-71
TMS99532A	3380-10
TMS99534	3380-17
TMS99534A	3380-12
TMS99542	3380-20
TMS99650	1462-75
TMS9980A	1462-56
TMS9980A	1437-17
TMS9981	1462-57
TMS9981	1437-18
TMS9995	1437-19
TMX27C512	★ 4212
TMX27PC128	★ 4219
TMX27PC256	★ 4220 3824-35
TMX27PC256-2	★ 4220 3824-13
TMX27PC256-3	★ 4220 3824-61
TMX2PC256-4	3824-79
TMX44C256-10	★ 4189 3829-79
TMX44C256-12	★ 4189 3829-84
TMX44C256-15	★ 4189 3829-91
TMX44C257-10	★ 4189 3829-80
TMX44C257-12	★ 4189 3829-85
TMX44C257-15	★ 4189 3829-92
TMX44C259-10	★ 4189 3829-81
TMX44C259-12	★ 4189 3829-86
TMX44C259-15	★ 4189 3829-93
TMX47C1024-20	3853-78
TMX47C512-20	3853-48
TMX47C512-25	3853-53
TMX47C512-30	3853-58
TMX4C1024-10	★ 4188 3830-43

Arranged alphanumerically from left to right.

ADVERTISERS' PRODUCT INDEX

Texas Instruments (Cont'd)

Device	Page-Line
TMX4C1024-12	★ **4188**
	3830-54
TMX4C1024-15	★ **4188**
	3830-65
TMX4C1025-10	★ **4188**
	3830-44
TMX4C1025-12	★ **4188**
	3830-55
TMX4C1025-15	★ **4188**
	3830-66
TMX4C1026-10	★ **4188**
	3830-45
TMX4C1026-12	★ **4188**
	3830-56
TMX4C1026-15	★ **4188**
	3830-67
TMX4C1027-10	★ **4188**
	3830-46
TMX4C1027-12	★ **4188**
	3830-57
TMX4C1029-10	★ **4188**
	3830-47
TMX4C1029-12	★ **4188**
	3830-58
TMX4C1029-15	★ **4188**
	3830-68
TP4320A	833-157
TZ2003	3378-39
UCN4810	¶ 398-4
UDN2841	3310-26
UDN2845	3310-27
VM61001	3323-99
VM61002	3323-100
VM61003	3323-101
VM61004	3323-102
VM61005	3323-103
VM71001	3323-104
VM71002	3323-105
VM71003	3323-106
XDS-11	1821-18
XDS-22	1821-19
Z80	¶ 440-21
Z8000	¶ 440-21
μA702M	★ **718**
	3354-27
μA709AM	★ **718**
	3346-125
μA709M	★ **718**
	3354-9
μA710M	★ **719**
	3312-31
μA711M	★ **719**
	3314-12
μA723M	★ **720**
	3393-134
μA733M	★ **720**
	3308-27
μA741M	★ **718**
	3353-49
μA747M	★ **718**
	3366-24
μA78M05M	★ **720**
	3384-52
μA78M08M	★ **720**
	3386-31
μA78M12M	★ **720**
	3387-10
μA79M05	★ **720**
μA9637AC	★ **722**
	2886-53

Thomson-CSF Components Corporation

Device	Page-Line
CRN3300	3381-77
EF4440	¶ 371-1
EF4442	¶ 371-1
EF4443	2896-11
EF6800	1454-65
	¶ 370-14
	1431-17
EF68000	1463-126
EF68000-10	1463-127
EF68000-12	1463-128
EF68000-16	1464-43
EF68000-8	1463-129
EF68008	1463-132

Device	Page-Line
EF68008-10	1431-18
EF68008-8	1431-19
EF6801	1453-152
EF6802	1454-104
EF6803	1454-45
EF6803U4	1455-37
EF6804J2	1454-6
EF6804J2	1431-20
EF6804P2	1454-7
EF6804P2	1431-21
EF6805P2	1453-153
EF6805P4	1453-154
EF6805P6	1453-155
EF6805R2	1454-66
EF6805R3	1431-22
EF6805T2	1454-10
EF6805U2	1453-156
EF6805U3	1454-48
EF6808	1454-111
EF6809	1454-93
EF6809E	1454-78
EF6810	3832-41
EF6821	1470-1
EF6821	1469-134
EF68230-10	1464-54
EF68230-8	1464-55
EF6840	1470-26
EF68440	1464-23
EF68440	1466-84
EF6846	1470-39
EF68483	1464-13
EF6850	2900-7
EF6850	1454-138
EF6850	1469-98
EF6852	1470-58
EF6852	1469-157
EF6854	1454-120
EF68564	1464-59
EF68901	1464-46
EF68A00	1454-67
EF68A02	1454-105
EF68A03	1453-158
EF68A08	1454-112
EF68A09	1454-94
EF68A09E	1454-79
EF68A10	3832-36
EF68A21	1470-2
EF68A21	1469-135
EF68A40	1470-27
EF68A50	1454-136
EF68A50	1469-96
EF68A52	1470-59
EF68A54	1454-121
EF68B00	1454-68
EF68B02	1454-106
EF68B03	1453-159
EF68B08	1454-113
EF68B09	1454-95
EF68B09E	1454-80
EF68B10	3832-32
EF68B21	1470-3
EF68B21	1469-136
EF68B40	1470-28
EF68B50	1454-137
EF68B50	1469-97
EF68B52	1470-60
EF68B54	1454-122
EF68HC04P3	1454-8
EF68HC04P3	1431-23
EF68HC05E9	1453-160
EF7331	3381-98
EF7332	3377-43
EF7333	3377-157
EF7910	3379-104
EF9340	1468-75
	¶ 418-6
	¶ 418-9
	¶ 418-10
	¶ 430-4
EF9341	1468-76
	¶ 418-6
	¶ 418-9
	¶ 418-10
	¶ 430-4
EF9345	1458-5
EF9364	1465-98
	¶ 418-11
	¶ 430-2

Device	Page-Line
EF9365	1465-83
	¶ 371-5
	¶ 417-12
	¶ 418-7
	¶ 441-8
EF9366	1465-84
	¶ 371-5
	¶ 418-7
	¶ 441-8
EF9367	1465-85
	¶ 371-5
	¶ 417-12
	¶ 418-8
	¶ 441-8
EF9369	1470-46
EFB7189	3382-98
EFB7310	2829-28
EFB7310	3378-14
EFB7510	3379-120
EFB7511	3379-121
EFB7512	3379-122
EFG7515	3380-21
ESM1600	2887-13
ESM1602	2887-14
ET2147H-1	3839-102
ET2147H-2	3839-117
ET2147H-3	3840-16
ET2148	3836-31
ET2716	3819-89
ET2716-1	3819-78
ET2764	3822-21
ET2764-3	3822-48
ET2764-4	3822-76
ET9413	1451-16
ET9420	1451-17
ET9421	1451-18
ET9422	1451-19
ETC2716	3819-82
ETC2716-1	3819-74
ETC2716-5	3819-91
ETC2732-35	3820-95
ETC2732-45	3820-101
ETC2732-55	3820-113
ETC5040	3379-78
ETC5051	3377-85
ETC5054	3377-107
ETC5056	3377-86
ETC5057	3377-108
ETC5064	3377-109
ETC5067	3377-110
ETC9410	1451-20
ETC9411	1451-21
ETC9420	1451-22
ETC9421	1451-23
ETC9422	1451-24
ETC9444	1451-25
ETC9445	1451-26
ETL2128-3	3838-94
ETL2128-4	3839-22
ETL2128-5	3839-49
ETL2147	3840-39
ETL2147H-3	3840-17
ETL9410	1451-27
ETL9411	1451-28
ETL9413	1451-29
ETL9420	1451-30
ETL9421	1451-31
ETL9422	1451-32
ETL9444	1451-33
ETL9445	1451-34
LF155	3351-47
LF155A	3345-38
LF156	3352-1
LF156A	3345-49
LF157	3351-46
LF157A	3345-50
LF351	3357-24
LF351A	3346-39
LF351B	3352-27
LF353	3368-20
LF353A	3362-44
LF353B	3365-15
LM101A	3346-97
LM104	3395-10
LM105	3394-15
LM107	3346-104
LM108	3347-4
LM108	3346-61
LM108A	3342-41
LM108M	3346-62
LM111	3312-52
LM117	3393-109

Device	Page-Line
LM118	3350-27
LM119	3314-19
LM123	3385-51
LM124	3371-38
LM137	3394-92
LM137	3395-36
LM139	3316-11
LM1458C	3367-23
LM1458M	3365-48
LM146	3371-30
LM148	3371-31
LM158	3365-40
LM193	3314-30
LM201A	3346-118
LM204	3395-11
LM205	3394-16
LM207	3346-105
LM208	3346-63
LM208A	3342-42
LM211	3312-53
LM218	3350-28
LM2901	3316-46
LM2902	3334-142
LM2902	3373-4
LM2903	3314-53
LM2904	3334-114
LM2904	3367-53
LM301A	3356-27
LM304	3394-56
LM305	3394-20
LM307	3356-18
LM308	3356-11
LM308A	3343-2
LM311	3313-22
LM317	3393-110
LM318	3357-76
LM319	3315-9
LM323	3385-52
LM324	3373-3
LM324A	3370-42
LM337	3394-93
LM337	3395-37
LM339	3316-35
LM346	3372-44
LM348	3372-31
LM358	3367-55
LM393	3314-44
LM555	3383-56
LM556	3383-95
LM748C	3355-24
LM748M	3353-37
LS204	3363-72
MC3403	3373-43
MC4558	3366-2
MC4558C	3367-25
SFC-2901	844-85
SFC-2901B	856-16
SFC-2901B	1448-63
SFC-2901B	1411-22
SFC-2901C	1448-64
SFC-2901C	1411-23
SFC-2902A	1448-120
SFC-2903	844-86
SFC-2903	1448-65
SFC-2903	1411-24
SFC-2909	887-54
SFC-2909	1449-5
SFC-2909A	1449-6
SFC-2910	1462-103
SFC-2911	1449-7
SFC-2911A	887-55
SFC-2911A	1449-8
SFC-2914	1449-30
SFC-2914	1469-149
SFC-2915A	2888-32
SFC-2915A	1448-85
SFC-2917	2888-35
SFC-2917	1448-86
SFC-2918	864-309
SFC-2918	1449-51
SFC-2919	1449-48
SFC2100	3392-108
SFC2109	3384-29
SFC2109M	3384-77
SFC2110M	3350-10
SFC2200	3392-109
SFC2209	3384-30
SFC2210	3329-27
SFC2300	3392-102
SFC2309	3384-31
SFC2310	3356-1
SFC2315	3357-132

Device	Page-Line
SFC2709A	3346-124
SFC2709M	3354-6
SFC2710	3312-32
SFC2711	3314-33
SFC2723C	3393-135
SFC2723EC	3393-136
SFC2747C	3367-22
SFC2747M	3365-47
SFC2761C	3355-53
SFC2761M	3350-41
SFC2861AM	3355-52
SFC2861C	3357-86
SFC2861M	3350-42
SFC71190A	3819-60
SFC71190B	3818-112
SFC71190C	3818-90
SFC71191A	3819-38
SFC71191B	3818-120
SFC71191C	3818-101
SFF19200	3378-128
SFF96364	1466-10
SFF96366	1466-11
TAA861	3357-90
TBA1440G	3327-92
TBA1441	3327-93
TBA800	3318-21
TBA810	3318-22
TBA820	3318-84
TBA920	3325-138
TCA940	3318-23
TDA0159	3328-31
TDA0161	3328-32
TDA0162	3328-33
TDA1041	2896-12
TDA1048	3321-17
TDA1102	3318-143
TDA1111	3318-144
TDA1154	2896-13
TDA1170	3326-161
TDA200	3393-67
TDA2003	3318-24
TDA2006	3318-25
TDA2030	3318-145
TDA2540	3327-94
TDA2541	3327-95
TDA2542	3327-96
TDA2593	3325-139
TDA3300	3325-46
TDB0131	3405-88
TDB0135	3404-158
TDB0136	3402-77
TDB0149	3372-32
TDB0347	3373-39
TDB0347A	3370-6
TDB0347B	3371-29
TDB1146	3394-45
TDC0134	3404-159
TDC0136	3402-78
TDC0149	3371-32
TDC3403	3371-53
TDE1607	2896-83
TDE1647	2896-82
TDE1647A	2896-84
TDE1737	2896-85
TDE1767	2896-87
TDE1767A	2896-89
TDE1777	2896-81
TDE1787	2896-86
TDE1787A	2896-88
TDE3207	2894-34
TDF3302	3316-56
TDF3403	3373-9
TEA1001	3397-4
	¶ 425-10
	¶ 426-6
TEA1030	3325-47
TEA1510	3404-87
TEA1511	3404-94
TEA1511	3405-16
TEA1512	890-24
TEA1512	2894-4
TEA2015	3327-1
TEA2017	3325-112
	¶ 417-17
TEA2018	3397-5
TEA2019	3397-6
TEA2020	¶ 417-16
TEA2021	3318-168
TEA2024	3318-169
TEA2025	3318-193
TEA2585	¶ 417-9
TEA2586	¶ 417-9

Device	Page-Line
TEA3717	2896-31
TEA5030	3325-48
TEA7034	★ **3738**
	3319-146
	3384-53
TEA 2015A	¶ 417-11
TEB1013	2897-147
TEC1761C	3367-44
TEC1761M	3363-87
TL062C	3368-41
TL064C	3373-50
TL072C	3368-18
TL074AC	3372-16
TL074BC	3372-14
TL081C	3357-128
TL082AC	3366-45
TL082BC	3363-48
TL082C	3368-52
TL084AC	3372-30
TL084BC	3370-37
TL084C	3374-7
TS4164-15	3827-70
TS4164-20	3827-90
TS8306	1470-62
TS8308	1470-63
TS8408	1470-64
UAA4000	3323-4
UAA4001	3397-7
	¶ 425-10
	¶ 426-7
UAA4002	2894-15
	¶ 425-14
	3399-74
UAA4003	3397-8
UAA4004	2895-82
UAA4006	3397-9
	¶ 425-3
UAA4007	3404-85
UAA4008	3404-86
UAA4009	3323-27
UAB1005	843-140
UAB1005	2832-6
UAC1005	2832-7
μA2808	3386-32
μA2812	3387-20
μA2818	3388-122
μA2824	3389-84
μA741	3330-30
μA741C	3355-23
μA741M	3353-36
μA776C	3355-1
μA776M	3352-30
μA7805	3384-78
μA7806	3385-95
μA7905	3390-58
μA791	3355-47
μA7912	3391-64
μA7915	3391-130

Toshiba America

Device	Page-Line
42055-1812	3389-22
BM4220	1821-20
BM4720	1821-21
BM4721	1821-22
BM4820	1821-23
BM4821	1821-24
BM8022	1821-25
T1400	3321-88
T6497	★ **1750**
	1460-87
T6684	★ **1750**
T6721	★ **1750**
T6772	★ **1750**
T6803	★ **1750**
T6831	★ **1750**
TA7060A	3321-80
TA7061B	3321-81
TA7063	3319-26
TA7120	3319-27
TA7122B	3319-28
TA7129A	3319-29
TA7130	3326-80
TA7133	3376-22
TA7136A	3319-30
TA7137	3323-152
TA7137-ST	3323-153
TA7140	3318-85
TA7141A	3325-49
TA7157A	3322-149
TA7158	3400-139
TA7176A	3326-81

¶ Indicates page number in Application Note Directory.
★ Indicates additional data is provided on the page noted.

Toshiba America (Cont'd)

Device	Page-Line
TA7193	3325-50
TA7205A	3318-26
TA7207	3318-86
TA7215	3318-194
TA7217A	3318-27
TA7222A	3318-28
TA7227	3318-170
TA7230	3318-195
TA7232	3318-196
TA7233	3318-197
TA7237A	3318-146
TA7238	3318-29
TA7240A	3318-171
TA7241A	3318-172
TA7242	3327-2
TA7243	3326-82
TA7252	3318-173
TA7263	3318-174
TA7264	3318-175
TA7268	3318-147
TA7269	3318-198
TA7270	3318-176
TA7271	3318-177
TA7283	3324-22
TA7302	3321-148
TA7303	3322-65
TA7310	3375-71
TA7313A	3318-87
TA7314	3326-83
TA7315B	3326-114
TA7316	3384-3
TA7317	3328-7
TA7318	3328-5
TA7320	3398-88
TA7322	3319-31
TA7324	3316-150
TA7325	3319-65
TA7326	3383-57
TA7327	3383-58
TA7330	3324-32
TA7331	3324-23
TA7332	3328-6
TA7333	3323-12
TA7335	3321-131
TA7336	3318-88
TA7341	3321-86
TA7342	3322-150
TA7344	3322-161
TA7358	3321-125
TA7359	3319-66
TA7362	3316-151
TA7401A	3322-151
TA7402	3321-53
TA7405	3324-26
TA7502	3353-31
TA7502A	3353-32
TA7502B	3345-7
TA7504	3330-31
TA7506	3330-20
TA75458	3366-25
TA75902	3335-2
TA7606	3405-144
TA7607A	3325-51
TA7611A	3325-52
TA7612A	2874-107
TA7613A	3321-108
TA7616	3321-54
TA7619A	3325-85
TA7621	3325-53
TA7622A	3325-54
TA7630	3319-107
TA7632	3326-84
TA7639	3324-37
TA7640A	3321-83
TA7641B	3321-44
TA7654	2874-110
TA7655	2874-111
TA7657	3323-11
TA7658	3319-67
TA7659	3325-55
TA7660	3325-56
TA7661	3325-57
TA7663	3324-36
TA7666	2876-125
TA7667	2876-126
TA7668B	3324-33
TA7675A	3325-58
TA7676	3325-59
TA7678A	3325-60
TA7685	3319-68
TA7687A	3321-85
TA7688	3316-66
TA7705	3324-39
TA7709	3319-69
TA7738	3323-150
TA7757	3321-84
TA78005A	3384-79
TA78012A	3387-21
TA78015A	3388-19
TA78L005	3384-15
TA78L005A	3384-16
TA78L006	3385-73
TA78L006A	3385-74
TA78L007	3385-129
TA78L007A	3385-130
TA78L008	3386-13
TA78L008A	3386-14
TA78L009	3386-80
TA78L009A	3386-81
TA78L010	3386-91
TA78L010A	3386-92
TA78L012	3386-118
TA78L012A	3386-119
TA78L015	3387-120
TA78L015A	3387-121
TA78L018	3388-96
TA78L018A	3388-97
TA78L020	3389-24
TA78L020A	3389-25
TA78L024	3389-56
TA78L024A	3389-57
TA78L075	3386-3
TA78L075A	3386-4
TA78L132	3387-101
TA78L132A	3387-102
TC17G005	4456-46
TC15G008	**★ 4799** 4456-48
TC15G014	**★ 4799** 4456-50
TC15G022	**★ 4799** 4456-52
TC15G032	**★ 4799** 4457-1
TC15G042	**★ 4799** 4457-3
TC15G060	**★ 4799** 4457-5
TC17G005	**★ 4799**
TC17G008	**★ 4799** 4456-47
TC17G014	**★ 4799**
TC17G022	**★ 4799**
TC17G032	**★ 4799** 4456-51
TC17G042	**★ 4799** 4457-2
TC17G064	4457-4
TC17G080	4457-6
TC17G100	4457-7
TC17G14	4456-49
TC2078-35	3841-47
TC4000B	**★ 1363** 827-8
TC4001B	**★ 1363** 827-186
TC4001UB	**★ 1363** 827-187
TC4002B	**★ 1363** 827-56
TC4006B	**★ 1363** 837-2
TC4007UB	**★ 1363** 810-174
TC4008B	**★ 1363** 806-74
TC4009UB	**★ 1363** 809-6
TC40102B	**★ 1363** 815-96
TC40103B	**★ 1363** 812-123
TC40104B	**★ 1363** 835-87
TC40107	**★ 1363** 824-113
TC4010B	**★ 1363** 809-62
TC40117	**★ 1363**
TC4011B	**★ 1363** 825-116
TC4011UB	**★ 1363** 825-117
TC4012B	**★ 1363** 824-166
TC4013B	**★ 1363** 820-73
TC4014B	**★ 1363** 836-140
TC4015B	**★ 1363** 835-8
TC40160B	**★ 1363** 815-23
TC40161B	**★ 1363** 812-34
TC40162B	**★ 1363** 814-157
TC40163B	**★ 1363** 811-170
TC4016B	**★ 1363** 2824-37
TC40174B	**★ 1363** 821-45
TC40175B	**★ 1363** 820-126
TC4017B	**★ 1363** 814-108
TC4018B	**★ 1363** 816-115
TC40192B	**★ 1363** 815-80
TC40193	**★ 1363** 812-114
TC40194B	**★ 1363** 835-56
TC4019B	**★ 1363** 826-21
TC4020B	**★ 1363** 814-9
TC4021B	**★ 1363** 835-137
TC4022B	**★ 1363** 816-90
TC4023B	**★ 1363** 825-40
TC4024B	**★ 1363** 813-71
TC4025B	**★ 1363** 827-109
TC4027B	**★ 1363** 823-54
TC4028B	**★ 1363** 817-50
TC4029B	**★ 1363** 816-134
TC4030B	**★ 1363** 828-91
TC4032B	**★ 1363** 806-31
TC4034B	**★ 1363** 835-155
	★ 1363 3855-105
TC4035B	**★ 1363** 835-88
TC40368	810-37
TC4036B	**★ 1363** 831-80
TC4038B	**★ 1363** 806-20
TC4039B	**★ 1363** 831-85
TC4040B	**★ 1363** 813-159
TC4042B	**★ 1363** 829-52
TC4043B	**★ 1363** 829-89
TC4044B	**★ 1363** 829-69
TC4047B	**★ 1363** 833-184
TC4049B	**★ 1363** 809-50
TC4050B	**★ 1363** 809-95
TC4051B	**★ 1363** 2830-144
TC4052B	**★ 1363** 2830-41
TC4053B	**★ 1363** 2826-71
TC4054B	**★ 1363** 819-120
	★ 1363 2876-101
TC4055B	**★ 1363** 819-78
	★ 1363 2875-146
TC4056B	**★ 1363** 819-83
	★ 1363 2876-10
TC4063B	**★ 1363** 807-69
TC4066B	**★ 1363** 2824-29
TC4068B	**★ 1363** 825-185
TC4069UB	**★ 1363** 811-77
TC4071B	**★ 1363** 826-174
TC4072B	**★ 1363** 826-85
TC4073B	**★ 1363** 824-43
TC4075B	**★ 1363** 826-122
TC4076B	**★ 1363** 820-175
TC4077	**★ 1363**
TC4078B	**★ 1363** 828-18
TC4081B	**★ 1363** 824-101
TC4082B	**★ 1363** 823-190
TC4085B	**★ 1363** 826-41
TC4086B	**★ 1363** 826-68
TC4093B	**★ 1363** 839-2
TC4094B	**★ 1363** 835-175
	★ 1363 3856-83
TC4099B	**★ 1363** 831-29
TC40H000	**★ 1363** 825-119
TC40H002	**★ 1363** 827-189
TC40H004	**★ 1363** 811-79
TC40H008	**★ 1363** 824-103
TC40H010	**★ 1363** 825-42
TC40H011	**★ 1363** 824-45
TC40H020	**★ 1363** 824-167
TC40H021	**★ 1363** 823-192
TC40H027	**★ 1363** 827-111
TC40H032	**★ 1363** 826-176
TC40H042	**★ 1363** 817-52
TC40H051	**★ 1363** 826-43
TC40H074	**★ 1363** 820-75
TC40H076	**★ 1363** 823-56
TC40H076A	**★ 1363** 823-57
TC40H107	**★ 1363** 823-160
TC40H107A	**★ 1363** 823-161
TC40H138	**★ 1363** 818-81
TC40H139	**★ 1363** 817-166
TC40H147	**★ 1363** 837-67
TC40H148	**★ 1363** 837-68
TC40H151	**★ 1363** 833-52
TC40H153	**★ 1363** 832-10
TC40H155	**★ 1363** 817-168
TC40H157	**★ 1363** 832-97
TC40H158	**★ 1363** 832-131
TC40H160	**★ 1363** 815-24
TC40H161	**★ 1363** 812-35
TC40H162	**★ 1363** 814-158
TC40H163	**★ 1363** 811-171
TC40H164	**★ 1363** 836-66
TC40H166	**★ 1363** 836-21
TC40H174	**★ 1363** 821-47
TC40H175	**★ 1363** 820-128
TC40H192	**★ 1363** 815-83
TC40H193	**★ 1363** 812-117
TC40H194	**★ 1363** 835-177
TC40H240	**★ 1363** 839-138
TC40H241	**★ 1363** 840-45
TC40H242	**★ 1363**
TC40H243	**★ 1363**
TC40H244	**★ 1363** 840-46
TC40H245	**★ 1363** 841-188
TC40H259	**★ 1363** 831-30
TC40H273	**★ 1363** 821-95
TC40H365	**★ 1363** 809-178
TC40H366	**★ 1363** 810-39
TC40H367	**★ 1363** 809-179
TC40H368	**★ 1363**
TC40H373	**★ 1363** 830-26
TC40H374	**★ 1363** 822-159
TC40H375	**★ 1363** 829-33
TC40H386	**★ 1363** 828-92
TC40H390	**★ 1363** 815-144
TC40H393	**★ 1363** 812-193
TC40HC390	815-163
TC4501B	**★ 1363** 828-135
TC4502B	**★ 1363** 809-17
TC4508B	**★ 1363** 829-16
TC4510B	**★ 1363** 815-81
TC4511B	**★ 1363** 819-169
	★ 1363 2875-168
TC4512B	**★ 1363** 833-72
TC4514B	**★ 1363** 819-4
TC4515B	**★ 1363** 819-5
TC4516B	**★ 1363** 812-115
TC4518B	**★ 1363** 816-7
TC4519B	**★ 1363** 833-23
TC4520B	**★ 1363** 812-172
TC4521B	**★ 1363** 834-139
TC4522B	**★ 1363**
TC4522B	**★ 13663** 815-107
TC4526B	**★ 1363** 812-134
TC4527B	**★ 1363** 838-46
TC4528B	**★ 1363** 834-97
TC4530B	**★ 1363** 828-132
TC4531B	**★ 1363** 842-113
TC4532B	**★ 1363** 842-84
TC4538B	**★ 1363** 834-65
TC4539B	**★ 1363** 832-8
TC4543B	**★ 1363** 819-105
TC4555B	**★ 1363** 817-70
TC4556B	**★ 1363** 817-84
TC4560B	**★ 1363** 806-9
TC4561B	**★ 1363** 808-59
TC4572B	**★ 1363** 828-138
TC4583B	**★ 1363** 838-54
TC4584	**★ 1363**
TC4585B	**★ 1363** 807-70
TC5000	835-11
TC5001	816-45
TC5002B	817-57
TC5003	3327-97
TC5004	835-22
TC5010	816-64
TC5012B	809-180
TC5018	811-111
TC5018B	842-53
TC5020B	837-42
TC5022B	819-170
TC5023	2831-53
TC5024	808-143
TC5025	808-144
TC5026B	816-136
TC5027B	811-114
TC5029B	825-143
TC5032	816-70
TC5036	813-160
TC5037	816-46
TC5048	813-33
TC5050	835-21
TC5051	816-47
TC5052	816-48
TC5053	816-49
TC5054	816-50
TC5064B	808-155
TC5065B	808-156
TC5066B	810-138
TC5067B	810-139
TC5068B	819-171
TC5069B	819-172
TC5082	834-118
TC5082L	834-117
TC5090	2837-21
TC5091	2837-20
TC50H000	**★ 1363** 809-18
TC50H001	**★ 1363**
TC50H4066	**★ 1363**
TC511000	**★ 4263**
TC511001	**★ 4263**
TC51832	**★ 4263**
TC531000	3853-79
TC5310000	**★ 4263**
TC5320000	**★ 4263**
TC53256	3846-67
TC53257	**★ 4263** 3852-98
TC5332	3849-126
TC5333	3849-127
TC5334	3850-1
TC5335	3850-2

Arranged alphanumerically from left to right.

Toshiba America (Cont'd)

Device	Page-Line
TC5364	★ 4263 3850-99
TC5365	★ 4263 3850-100
TC5366	★ 4263 3850-101
TC5501	3833-110
TC5504A-2	★ 4263 3840-54
TC5504A-3	★ 4263 3840-82
TC5504AL-2	★ 4263 3840-55
TC5504AL-3	★ 4263 3840-83
TC5513A-20	3836-60
TC5514A-2	★ 4263 3836-61
TC5514A-3	★ 4263 3836-93
TC5514AL-2	★ 4263 3836-62
TC5514AL-3	★ 4263 3836-94
TC5516A	★ 4263 3839-38
TC5516A-2	★ 4263 3839-6
TC5516AL	★ 4263 3839-39
TC5516AL-2	★ 4263 3839-7
TC5517A	★ 4263 3839-40
TC5517A-2	★ 4263 3839-8
TC5517AL	★ 4263 3839-41
TC5517AL-2	★ 4263 3839-9
TC5517B-20	★ 4263 3839-10
TC5517B-25	★ 4263 3839-42
TC5517BL-20	★ 4263 3839-11
TC5517BL-25	★ 4263 3839-43
TC5517C-20	★ 4263 3839-12
TC5518B-20	★ 4263 3839-13
TC5518B-25	★ 4263 3839-44
TC5518BL-20	★ 4263 3839-14
TC5518BL-25	★ 4263 3839-45
TC5518C-20	★ 4263 3839-15
TC55257	★ 4263
TC5561-45	★ 4263 3847-16
TC5561-55	★ 4263 3847-35
TC5562-45	★ 4263 3847-17
TC5562-55	★ 4263 3847-36
TC5564-15	★ 4263 3843-72
TC5564-20	★ 4263 3843-93
TC5564L-15	★ 4263 3843-73
TC5564L-20	★ 4263 3843-94
TC5565-12	★ 4263 3843-46
TC5565-15	★ 4263 3843-74
TC5565L-12	★ 4263 3843-47
TC5565L-15	★ 4263 3843-75
TC5710000	★ 4263
TC57256-20	★ 4263 3824-19
TC57256-25	★ 4263 3824-42
TC57512	★ 4263
TC584B	839-9
TC74HC00	★ 1363 825-69
TC74HC02	★ 1363 827-143
TC74HC03	★ 1363 825-137
TC74HC04	★ 1363 811-24
TC74HC08	★ 1363 824-73
TC74HC10	★ 1363 825-6
TC74HC107	★ 1363 823-139
TC74HC109	★ 1363 823-18
TC74HC11	★ 1363 824-18
TC74HC112	★ 1363 823-19
TC74HC113	★ 1363 823-67
TC74HC123	★ 1363 834-37
TC74HC125	★ 1363 808-139
TC74HC126	★ 1363 808-134
TC74HC131	★ 1363 818-155
TC74HC132	★ 1363 838-157
TC74HC133	★ 1363 825-199
TC74HC137	★ 1363 818-123
TC74HC138	★ 1363 818-36
TC74HC139	★ 1363 817-128
TC74HC14	★ 1363 811-82
TC74HC147	★ 1363 842-102
TC74HC148	★ 1363 819-39
TC74HC151	★ 1363 833-46
TC74HC153	★ 1363 833-92
TC74HC154	★ 1363 819-32
TC74HC155	★ 1363 817-89
TC74HC157	★ 1363 832-81
TC74HC158	★ 1363 832-116
TC74HC160	★ 1363 814-182
TC74HC161	★ 1363 812-4
TC74HC162	★ 1363 814-133
TC74HC163	★ 1363 811-141
TC74HC164	★ 1363 836-52
TC74HC165	★ 1363 836-11
TC74HC166	★ 1363 836-82
TC74HC173	★ 1363 820-151
TC74HC174	★ 1363 821-19
TC74HC175	★ 1363 820-108
TC74HC181	★ 1363 806-171
TC74HC182	★ 1363 806-91
TC74HC190	★ 1363 815-137
TC74HC191	★ 1363 813-24
TC74HC192	★ 1363 815-47
TC74HC193	★ 1363 812-72
TC74HC194	★ 1363 835-43
TC74HC195	★ 1363 835-108
TC74HC20	★ 1363 824-135
TC74HC21	★ 1363 823-169
TC74HC221	★ 1363 834-38
TC74HC237	★ 1363 818-90
TC74HC238	★ 1363 818-91
TC74HC240	★ 1363 839-94
TC74HC241	★ 1363 839-169
TC74HC242	★ 1363 838-69
TC74HC243	★ 1363 838-76
TC74HC244	★ 1363 840-91
TC74HC245	★ 1363 841-146
TC74HC251	★ 1363 833-93
TC74HC253	★ 1363 832-17
TC74HC257	★ 1363 832-151
TC74HC258	★ 1363 832-177
TC74HC259	★ 1363 830-193
TC74HC266	828-110
TC74HC27	★ 1363 827-77
TC74HC273	★ 1363 821-77
TC74HC279	★ 1363 829-90
TC74HC280	★ 1363 842-95
TC74HC283	★ 1363 806-51
TC74HC292	837-146
TC74HC294	837-147
TC74HC298	★ 1363 833-12
TC74HC299	★ 1363 836-161
TC74HC30	★ 1363 825-164
TC74HC32	★ 1363 826-147
TC74HC323	★ 1363 836-109
TC74HC354	★ 1363 833-129
TC74HC356	★ 1363 833-130
TC74HC365	★ 1363 809-146
TC74HC366	★ 1363 810-19
TC74HC367	★ 1363 809-147
TC74HC368	★ 1363 810-20
TC74HC373	★ 1363 829-155
TC74HC374	★ 1363 822-95
TC74HC375	★ 1363 829-29
TC74HC377	★ 1363 821-116
TC74HC386	★ 1363 828-47
TC74HC390	★ 1363 816-9
TC74HC393	★ 1363 812-185
TC74HC4002	★ 1363 827-24
TC74HC40102	★ 1363
TC74HC40103	★ 1363
TC74HC4017	★ 1363 814-83
TC74HC4020	★ 1363 813-178
TC74HC4022	★ 1363 816-71
TC74HC4024	★ 1363 813-46
TC74HC4028	★ 1363 817-24
TC74HC4040	★ 1363 813-136
TC74HC4049	★ 1363 809-30
TC74HC4050	★ 1363 809-74
TC74HC4051	★ 1363 842-88
TC74HC4052	★ 1363 838-59
TC74HC4053	★ 1363 838-66
TC74HC4060	★ 1363 814-23
TC74HC4066	★ 1363 2824-30
TC74HC4072	★ 1363 826-69
TC74HC4075	★ 1363 826-101
TC74HC4078	★ 1363 827-202
TC74HC4094	★ 1363 835-161
TC74HC4102	816-8
TC74HC4103	812-118
TC74HC42	★ 1363 817-25
TC74HC423	★ 1363 834-39
TC74HC4511	★ 1363 819-142
TC74HC4514	★ 1363 819-12
TC74HC4515	★ 1363 819-8
TC74HC4518	★ 1363 815-178
TC74HC4520	★ 1363 812-138
TC74HC4538	★ 1363 834-40
TC74HC4543	★ 1363 819-91
TC74HC51	★ 1363 826-56
TC74HC533	★ 1363 830-80
TC74HC534	★ 1363 821-179
TC74HC540	★ 1363 810-80
TC74HC541	★ 1363 841-147
TC74HC563	★ 1363 830-81
TC74HC564	★ 1363 821-180
TC74HC573	★ 1363 829-156
TC74HC574	★ 1363 822-96
TC74HC590	★ 1363 813-112
TC74HC592	★ 1363 813-94
TC74HC593	★ 1363 813-95
TC74HC595	★ 1363 836-110
TC74HC597	★ 1363 836-96
TC74HC620	★ 1363 841-25
TC74HC623	★ 1363 841-148
TC74HC640	★ 1363 841-8
TC74HC643	★ 1363 841-11
TC74HC646	★ 1363 840-174
TC74HC648	★ 1363 840-128
TC74HC651	★ 1363 840-129
TC74HC652	★ 1363 840-175
TC74HC670	★ 1363 831-70
TC74HC688	★ 1363 806-111
TC74HC690	★ 1363 815-113
TC74HC691	★ 1363 813-11
TC74HC692	★ 1363 815-115
TC74HC693	★ 1363 813-13
TC74HC696	★ 1363 815-110
TC74HC697	★ 1363 813-16
TC74HC698	★ 1363 815-111
TC74HC699	★ 1363 813-17
TC74HC7266	★ 1363
TC74HC7292	★ 1363
TC74HC7294	★ 1363
TC74HC73	★ 1363 823-140
TC74HC74	★ 1363 820-37
TC74HC75	★ 1363 830-155
TC74HC76	★ 1363 823-20
TC74HC77	★ 1363 829-4
TC74HC85	★ 1363 807-47
TC74HC86	★ 1363 828-48
TC74HCT04	★ 1363 811-51
TC74HCT07	808-152
TC74HCT137	★ 1363 818-147
TC74HCT138	★ 1363 818-70
TC74HCT240	★ 1363 839-127
TC74HCT241	★ 1363 840-58
TC74HCT244	★ 1363 840-31
TC74HCT245	★ 1363 841-178
TC74HCT373	★ 1363 830-11
TC74HCT374	★ 1363
TC74HCT540	★ 1363 810-128
TC74HCT541	★ 1363 841-179
TC74HCT563	★ 1363 830-122
TC74HCT564	★ 1363 822-22
TC74HCT573	830-12
TC74HCT574	★ 1363 822-144
TC74HCT640	★ 1363 841-61
TC74HCT643	★ 1363 841-96
TC74HCT646	★ 1363 841-3
TC74HCT648	★ 1363 840-142
TC74HCT651	★ 1363 840-143
TC74HCT652	★ 1363 841-4
TC74HCT7007	★ 1363
TC74HCU04	★ 1363 811-91
TC9106B	3375-133
TC9109B	3375-134
TC9111B	3375-135
TC9121	3324-16
TC9122	816-25
TC9130	838-26
TC9132	3323-87
TC9134	3323-88
TC9135	838-27
TC9137B	3325-86
TC9138A	3324-10
TC9139A	3324-11
TC9140	3321-68
TC9142	3316-148
TC9143	3324-18
TC9144	3324-19
TC9146	3321-69
TC9147	3321-70
TC9148	3323-89
TC9149	3323-90
TC9150	3323-91
TC9153	3319-105
TC9154	3319-103
TC9155	3319-99
TC9156	3319-98
TC9158	3321-109
TC9159	3321-110
TC9160	3383-8
TC9162	2895-58
TC9163	2895-59
TC9164	2895-60
TC9165	3324-7
TC9166	3324-9
TC9167	3324-8
TC9169	3316-136
TC9170	3316-135
TC9300-003A	3375-136
TC9300-008	3375-137
TCP4600AC	1413-35
TD3501A	860-71
TD3502A	854-42
TD3503	3856-62
TD3505A	859-60
TD6100	862-5
TD6104	3322-88
TD6109	849-114
TD6109	891-61
TD6301A	3321-71
TD6304A	3324-2
TD6308A	3324-3
TD6309	3324-4
TDA7137	3316-102
TDA7137-ST	3316-103
TLCS-12A	1433-31
TLCS-43	1451-74
TLCS-46	1451-75
TM4503	2896-17
TMM2015A-10	★ 4263 3838-7
TMM2015A-12	★ 4263 3838-43
TMM2015A-15	★ 4263 3838-95
TMM2015A-90	★ 4263 3837-110
TMM2015B-10	★ 4263 3838-8
TMM2015B-12	★ 4263 3838-44
TMM2015B-15	★ 4263 3838-96
TMM2015B-90	★ 4263 3837-111
TMM2016-2	★ 4263 3839-23
TMM2016A	★ 4263 3838-97
TMM2016A-1	★ 4263 3838-9
TMM2016A-10	★ 4263 3838-10
TMM2016A-12	★ 4263 3838-45
TMM2016A-15	★ 4263 3838-98
TMM2016A-2	★ 4263 3839-24
TMM2016A-90	★ 4263 3837-112
TMM2016B	★ 4263 3838-99
TMM2016B-1	★ 4263 3838-11
TMM2016B-10	★ 4263 3838-12
TMM2016B-12	★ 4263 3838-46

¶ Indicates page number in Application Note Directory.
★ Indicates additional data is provided on the page noted.

Toshiba America (Cont'd)

Device	Page-Line
TMM2016B-15	**★ 4263** 3838-100
TMM2016B-90	**★ 4263** 3837-113
TMM2018-35	**★ 4263** 3837-52
TMM2018-45	**★ 4263** 3837-64
TMM2018-55	**★ 4263** 3837-84
TMM2063-10	**★ 4263** 3843-29
TMM2063-12	**★ 4263** 3843-54
TMM2063-15	**★ 4263** 3843-80
TMM2064-10	**★ 4263** 3843-30
TMM2064-12	**★ 4263** 3843-55
TMM2064-15	**★ 4263** 3843-81
TMM2068-35	**★ 4263** 3841-46
TMM2068-55	**★ 4263** 3842-36
TMM2078-45	**★ 4263** 3841-96
TMM2078-55	**★ 4263** 3842-35
TMM2089	**★ 4263**
TMM2114A-12	**★ 4263** 3836-45
TMM2114A-15	**★ 4263** 3836-51
TMM23128	3852-11
TMM23256	**★ 4263** 3852-89
TMM2332	3849-124
TMM2364	3851-8
TMM2365	3850-83
TMM2366	3850-71
TMM27128-20	**★ 4263** 3823-42
TMM27128-25	**★ 4263** 3823-43
TMM27256-15	**★ 4263** 3824-7
TMM27256-20	**★ 4263** 3824-30
TMM27512	**★ 4263**
TMM2764	**★ 4263** 3822-23
TMM2764-2	**★ 4263** 3821-108
TMM411000	**★ 4263**
TMM411001	**★ 4263**
TMM41256-12	**★ 4263** 3829-23
TMM41256-15	**★ 4263** 3829-59
TMM41257-12	**★ 4263** 3829-24
TMM41257-15	**★ 4263** 3829-60
TMM41464-12	**★ 4263** 3827-115
TMM41464-15	**★ 4263** 3827-129
TMM416-2	3826-64
TMM416-3	3826-79
TMM416-4	3826-90
TMM4164-2	**★ 4263** 3827-41
TMM4164-3	**★ 4263** 3827-71
TMM4164-4	**★ 4263** 3827-91
TMP4240	**★ 1750**
TMP4250	**★ 1750**
TMP4260	**★ 1750**
TMP4270	**★ 1750**
TMP42C40	**★ 1750**
TMP42C50	**★ 1750**
TMP42C60	**★ 1750**
TMP42C70	**★ 1750**
TMP4300C	1411-1
TMP4700C	1411-2
TMP4720	**★ 1750**
TMP4740	**★ 1750**
TMP47C20	**★ 1750**
TMP47C200	**★ 1750**
TMP47C21	**★ 1750**
TMP47C210	**★ 1750**
TMP47C22	**★ 1750**
TMP47C220	**★ 1750**
TMP47C40	**★ 1750**
TMP47C400	**★ 1750**
TMP47C41	**★ 1750**
TMP47C410	**★ 1750**
TMP47C420	**★ 1750**
TMP47C46	**★ 1750**
TMP8022	1456-104
TMP8035	**★ 1750** 1456-46 **★ 1750** 1431-24
TMP8039	**★ 1750** 1456-47 **★ 1750** 1431-25
TMP8039-6	**★ 1750** 1456-48
TMP8048	**★ 1750** 1456-92 **★ 1750** 1431-26
TMP8049	**★ 1750** 1456-93 **★ 1750** 1431-27
TMP8049-6	**★ 1750** 1456-94
TMP8085A	**★ 1750** 1457-297 **★ 1750** 1431-28
TMP8085A-2	**★ 1750** 1431-29
TMP80C35A	**★ 1750** 1456-49
TMP80C39A	**★ 1750** 1456-50 **★ 1750** 1431-30
TMP80C39A-6	**★ 1750** 1456-51
TMP80C40A	**★ 1750** 1456-52
TMP80C40A-6	**★ 1750** 1456-53
TMP80C48A	**★ 1750** 1456-3
TMP80C49A	**★ 1750** 1456-95
TMP80C49A-6	**★ 1750** 1456-96
TMP80C50A	**★ 1750** 1456-97
TMP80C50A-6	**★ 1750** 1456-98
TMP8155	**★ 1750** 1457-10
TMP8156	**★ 1750** 1457-11
TMP8243	**★ 1750** 1457-169
TMP8251A	**★ 1750** 1459-29
TMP8253-5	**★ 1750** 1457-393
TMP8255A-5	**★ 1750** 1457-400
TMP8259A	**★ 1750** 1459-38
TMP8279	**★ 1750**
TMP82C43	**★ 1750** 1459-16
TMP82C55	**★ 1750** 1460-131
TMP8355	**★ 1750** 1457-427
TMPZ84C00	**★ 1750** 1460-74
TMPZ84C00-3	**★ 1750** 1460-75
TMPZ84C10	**★ 1750** 1460-113
TMPZ84C20	**★ 1750** 1460-127
TMPZ84C30	**★ 1750** 1460-97
TMPZ84C40	**★ 1750** 1460-145
TMPZ84C41	**★ 1750** 1460-146
TMPZ84C42	**★ 1750** 1460-147
TSC21SC	4482-10
TSC22SC	4482-11
TSC23SC	**★ 4799** 4482-9
TSU2316E	3849-63
TSU333-2	3850-16

TriQuint

Device	Page-Line
Q-CHIP	**★ 4801** 4457-9 **★ 4801** 844-108 851-17
Q-chip	4457-8

Unicorn Microelectronics

Device	Page-Line
CMOS	4493-42
COMPILE	4484-39
COMPILE	**★ 4802** 4482-12

Unitrode

Device	Page-Line
L292	**★ 3741** 3404-122
L293	**★ 3741** 2895-89
L293D	**★ 3741**
L293D	**★ 3741** 2897-142
L293E	**★ 3741** 2897-143
L295	**★ 3741** 2897-135
L296	3397-10
L298	**★ 3741** 3400-102
LM195	3309-85
LM395	3309-86
PIC600	3397-11
PIC601	3397-12
PIC602	3397-13
PIC610	3397-14
PIC611	3397-15
PIC612	3397-16
PIC625	3397-17
PIC626	3397-18
PIC627	3397-19
PIC635	3397-20
PIC636	3397-21
PIC637	3397-22
PIC645	3397-23
PIC646	3397-24
PIC647	3397-25
PIC655	3397-26
PIC656	3397-27
PIC657	3397-28
PIC660	3397-29
PIC661	3397-30
PIC662	3397-31
PIC670	3397-32
PIC671	3397-33
PIC672	3397-34
PIC730	3397-35
PIC740	3397-36
PIC800	3397-37
PIC801	3397-38
PIC810	3397-39
PIC811	3397-40
PIC900	2895-101 ¶ 398-15
SG1524	3397-41
U1525A	¶ 425-6
U1527A	¶ 425-6
UC117	3393-111
UC137	3395-1
UC137	3395-38
UC150	3393-36
UC1524	**★ 3739** 3397-42
UC1524/883B	**★ 3739** 3397-43
UC1524A	**★ 3739**
UC1524A	**★ 3739** 3397-44 ¶ 426-10
UC1524A/883B	**★ 3739** 3397-45
UC1525A	**★ 3739** 3397-46
UC1525A/883B	3397-47
UC1526/883B	3397-48
UC1526A	**★ 3739** 3397-49
UC1527A	**★ 3739** 3397-50
UC1527A/883B	3397-51
UC1535	3397-52
UC1543	**★ 3740** 3401-97
UC1543/883B	**★ 3740** 3401-98
UC1544	**★ 3740** 3401-99
UC1544/883B	**★ 3740** 3401-100
UC1610	3400-100
UC1637	2896-14 ¶ 399-11
UC1704	**★ 3740** 3398-93
UC1706	**★ 3740** 3405-145
UC1707	**★ 3740** 3399-75
UC1825	**★ 3739** 3398-121
UC1825/883B	**★ 3739** 3398-122
UC1834	**★ 3740** 3401-114 ¶ 427-20
UC1834/883B	**★ 3740** 3401-115
UC1840	**★ 3739** 3397-53 ¶ 425-8
UC1840/883B	**★ 3739** 3397-54
UC1842	**★ 3739** 3398-126 ¶ 426-13
UC1842/883B	**★ 3739** 3397-55
UC1843	**★ 3739** 3398-127
UC1846	**★ 3739** 3398-128 ¶ 425-5
UC1846/883B	**★ 3739** 3398-129
UC1847	**★ 3739** 3398-130
UC1847/883B	**★ 3739** 3398-131
UC1901	**★ 3740** 3401-101 ¶ 425-4
UC1901/883B	**★ 3740** 3401-102
UC1903	3401-103
UC1906	**★ 3740** 3319-133
UC217	3393-112
UC237	3395-2
UC237	3395-39
UC250	3393-37
UC2524	**★ 3739** 3397-56
UC2524A	**★ 3739**
UC2524A	**★ 3739** 3397-57
UC2525A	**★ 3739** 3397-58
UC2526A	**★ 3739** 3397-59
UC2527A	**★ 3739** 3397-60
UC2543	**★ 3740** 3401-104
UC2544	**★ 3740** 3401-105
UC2637	2896-15 ¶ 399-11
UC2706	**★ 3740** 3405-146
UC2707	**★ 3740** 3399-80
UC2825	**★ 3739** 3398-123
UC2834	**★ 3740** 3401-116
UC2840	**★ 3739** 3397-61
UC2842	**★ 3739** 3398-132
UC2843	**★ 3739** 3398-133
UC2846	**★ 3739** 3398-134
UC2847	**★ 3739** 3398-135
UC2901	**★ 3740** 3401-106
UC2903	3401-107
UC2906	**★ 3740** 3319-134
UC317	3393-113
UC337	3395-3
UC337	3395-40
UC350	3393-38
UC3517	**★ 3741** 3400-110
UC3524	**★ 3739** 3397-62
UC3524A	**★ 3739**
UC3524A	**★ 3739** 3397-63
UC3525A	**★ 3739** 3397-64
UC3526A	**★ 3739** 3397-65
UC3527A	**★ 3739** 3397-66
UC3543	**★ 3740** 3401-108
UC3544	**★ 3740** 3401-109
UC3610	**★ 3741** 3400-101
UC3620	**★ 3741** 2895-118
UC3637	**★ 3741** 2896-16 ¶ 399-11
UC3704	**★ 3740** 3398-94
UC3706	**★ 3740**
UC3706	**★ 3741** 3405-147
UC3707	**★ 3740**
UC3707	**★ 3741** 3399-76
UC3717	**★ 3741** 2896-20
UC3770	**★ 3741** 3400-112
UC3825	**★ 3739** 3398-124
UC3834	**★ 3740** 3401-117
UC3840	**★ 3739** 3397-67
UC3842	**★ 3739** 3398-136 ¶ 426-11
UC3843	**★ 3739** 3398-137
UC3846	**★ 3739** 3398-138
UC3847	**★ 3739** 3398-139
UC3901	**★ 3740** 3401-110
UC3903	3401-111
UC493A	**★ 3739**
UC493A	**★ 3739** 3397-68
UC493AC	**★ 3739**
UC493AC	**★ 3739** 3397-69
UC494A	**★ 3739**
UC494A	**★ 3739** 3397-70
UC494AC	**★ 3739**
UC494AC	**★ 3739** 3397-71
UC495	**★ 3739** 3397-72
UC495A	**★ 3739**
UC495A	**★ 3739** 3397-73
UC495AC	**★ 3739**
UC495AC	**★ 3739** 3397-74
UC495B	**★ 3739**
UC495B	**★ 3739** 3397-75
UC495BC	**★ 3739**
UC495BC	**★ 3739** 3397-76
UC7805	3384-129
UC7805A	3384-80
UC7805AC	3384-81
UC7805C	3384-130
UC7812	3387-22
UC7812A	3387-68
UC7812AC	3387-69
UC7812C	3387-23
UC7815	3388-20
UC7815A	3388-21
UC7815AC	3388-22
UC7815C	3388-23
UC7905	3390-59
UC7905A	3390-60
UC7905AC	3390-61
UC7905C	3390-62
UC7912	3391-65
UC7912A	3391-66
UC7912AC	3391-67
UC7912C	3391-68
UC7915	3391-131
UC7915A	3391-132
UC7915AC	3391-133
UC7915C	3391-134
UFN833	¶ 426-13

Vatic Systems Inc.

Device	Page-Line
B1200A2	4457-42
B1700A2	4457-47
B600A2	4457-39
BA2	**★ 4804** 4457-46
CTD	4466-25
HC1P-8	**★ 4804**
HC1P-A	**★ 4804** 4482-15
HC1P-H	4482-14
HC2	**★ 4804** 4482-13
HCAP-H	**★ 4804**
M1000A1	4457-45
M1400B1	4457-43
M1500A1	4458-1
M2000B1	4457-49
M3000C2	4458-2
M360A1	4457-38
M4000C1	4458-3
M4000C2	4458-4
M6000C2	4458-6
M650A1	4457-41
MA1	**★ 4804** 4457-44
MB1	**★ 4804**
MB2	4457-48
MC2	**★ 4804** 4458-5
MPF	**★ 4804** 3398-11
Polyuse U	4465-20
Polyuse k	**★ 4804** 4457-40
VL400	**★ 4804** 4465-18
VL800	**★ 4804** 4465-21
VL900	**★ 4804** 4465-19

VLSI Technology

Device	Page-Line
CMOS Library	4482-19
CMOS Library	4482-20
EPL	4474-38

Arranged alphanumerically from left to right.

VLSI Technology (Cont'd)

Device	Page-Line
HMOS Library	4482-21
HMOS Library	4482-22
PROPRIETARY	4461-30
PROPRIETARY	4484-23
Silicon Compilers	★ 4812
VGC0500	★ 4805
	4458-9
VGC0900	★ 4805
	4458-7
VGC1200	★ 4805
	4458-8
VGC1900	★ 4805
	4458-10
VGC2400	★ 4805
	4458-11
VGC3200	★ 4805
	4458-12
VGC4000	★ 4805
	4458-13
VGC6000	★ 4805
	4458-14
VL16160	★ 1751
VL16160	★ 1752
VL16160	★ 1758
	1465-104
VL16C450	★ 1751
VL16C450	★ 1752
VL16C450	★ 1763
	2901-66
VL1770	★ 1751
VL1770	★ 1752
VL1770	★ 1766
	1466-108
VL1772	★ 1751
VL1772	★ 1752
VL1772	★ 1776
	1467-15
VL1935	★ 1751
VL1935	★ 1752
VL1935	★ 1757
	1468-54
VL2010	★ 1751
VL2010	★ 1752
VL2010	★ 1771
	843-109
VL2044	★ 1751
VL2044	★ 1752
VL2044	★ 1771
	843-110
VL2123	2901-67
VL2661	★ 1751
VL2661	★ 1752
VL2661	★ 1761
	1465-48
VL2773	1467-43
VL2777	1467-44
VL2791	1467-45
VL2793	★ 1751
VL2793	★ 1752
VL2793	★ 1756
	1467-46
VL2797	★ 1751
VL2797	★ 1752
VL2797	★ 1756
	1467-47
VL37C73	1467-48
VL37C77	1467-49
VL4500A	★ 1751
VL4500A	★ 1752
VL4500A	★ 1754
	2892-81
VL4501	2892-82
VL4502	★ 1751
VL4502	★ 1752
VL4502	★ 1755
	2894-12
VL6502	1431-34
VL6522	★ 1751
VL6522	★ 1752
VL6522	★ 1762
	1453-125
VL6551	★ 1751
VL6551	★ 1752
VL6551	★ 1764
	1453-107
VL65C02	★ 1751
VL65C02	★ 1752
VL65C02	★ 1753
	1453-70
VL65C21	1453-126
VL65C22	★ 1751
VL65C22	★ 1752
VL65C22	★ 1762
	1453-127
VL65C24	1453-133
VL65C51	★ 1751
VL65C51	★ 1752
VL65C51	★ 1764
	1453-108
VL65NC02	★ 1751
VL65NC02	★ 1752
VL65NC02	★ 1753
	1453-71
	★ 1751
	★ 1752
	★ 1753
	1433-1
VL6765	★ 1751
VL6765	★ 1752
VL6765	★ 1760
	1467-59
VL67C65	1467-60
VL6845E	★ 1751
VL6845E	★ 1752
VL6845E	★ 1759
	1465-71
VL6845R	★ 1751
VL6845R	★ 1752
VL6845R	★ 1759
	1465-72
VL68C45R	★ 1751
VL68C45R	★ 1752
VL68C45R	★ 1759
	1465-73
VL68C45S	★ 1751
VL68C45S	★ 1752
VL68C45S	★ 1759
	1465-74
VL7C103	★ 1751
VL7C103	★ 1752
VL7C103	★ 1768
	3380-71
VL7C211	★ 1751
VL7C211	★ 1752
VL7C211	★ 1769
	3380-50
VL7C212A	★ 1751
VL7C212A	★ 1770
	3379-111
VL8237A	1466-81
VL82C37A	★ 1751
VL82C37A	★ 1752
VL82C37A	★ 1767
	1457-363
VL82C50	★ 1751
VL82C50	★ 1752
VL82C50	★ 1763
	2901-68
	★ 1751
	★ 1752
	★ 1763
	1457-86
	1460-18
VL82C50A	★ 1751
VL82C50A	★ 1752
VL82C50A	★ 1763
	2901-69
VL8530	★ 1751
VL8530	★ 1752
VL8530	★ 1765
VMC Series	★ 4810
VP10P8	★ 4807
	4474-39
VP12P6	★ 4807
	4474-40
VP14P4	★ 4807
	4474-41
VP16P2	★ 4807
	4474-42
VP16P8	★ 4807
	4474-43
VP16RP4	4474-44
VP16RP6	★ 4807
	4474-45
VP16RP8	★ 4807
VP16RP8	★ 4808
	4474-46
VP16RP8M	★ 4807
VP16RP8M	★ 4808
	4470-61
VP20PX	4474-47
VSC Series	★ 4809
	4482-18
VSYC2901	★ 4811
VT16AM8	★ 4266
	3837-42
VT16DP8	★ 4266
VT16DP8	★ 4268
	3837-43
VT16DP8-70	★ 4266
VT16DP8-70	★ 4268
	3837-44
VT16H4	★ 4266
	3844-110
VT16H4-35	★ 4266
	3844-111
VT16H4-45	★ 4266
	3845-8
VT16H4-55	★ 4266
	3845-37
VT2130	★ 4266
VT2130	★ 4267
	3837-21
VT2130-10	★ 4266
VT2130-10	★ 4267
	3837-25
VT2130-12	★ 4266
VT2130-12	★ 4267
	3837-33
VT2130-15	★ 4266
VT2130-15	★ 4267
	3837-36
VT2130-20	★ 4266
VT2130-20	★ 4267
	3837-39
VT2131	★ 4266
VT2131	★ 4267
	3837-22
VT2131-10	★ 4266
VT2131-10	★ 4267
	3837-26
VT2131-12	★ 4266
VT2131-12	★ 4267
	3837-34
VT2131-15	★ 4266
VT2131-15	★ 4267
	3837-37
VT2131-20	★ 4266
VT2131-20	★ 4267
	3837-40
VT231024	★ 4265
	3853-74
VT231024-17	★ 4265
	3853-75
VT231024-20	★ 4265
	3853-84
VT231024-30	★ 4265
	3853-100
VT231024-45	★ 4265
	3853-106
VT23121	3851-100
VT23128-15	★ 4265
	3851-119
VT23128-20	★ 4265
	3852-14
VT23128-25	★ 4265
	3852-38
VT23128-45	★ 4265
	3852-65
VT23129-15	★ 4265
	3851-120
VT23129-20	★ 4265
	3852-15
VT23129-25	★ 4265
	3852-39
VT23129-45	★ 4265
	3852-66
VT23130-15	3851-121
VT23130-20	3852-16
VT23130-25	3852-40
VT23130-30	3852-52
VT23130-45	3852-67
VT23131	3852-41
VT23131-25	3852-42
VT23131-30	3852-53
VT23131-45	3852-68
VT23256-20	★ 4265
	3852-114
VT23256-25	★ 4265
	3853-11
VT23256-45	★ 4265
	3853-32
VT23257-20	★ 4265
	3852-115
VT23257-25	★ 4265
	3853-12
VT23257-45	★ 4265
	3853-33
VT2332-25	★ 4265
	3849-97
VT2332-30	★ 4265
	3849-114
VT2332-45	★ 4265
	3850-18
VT2333-25	★ 4265
	3849-98
VT2333-30	★ 4265
	3849-115
VT2333-45	★ 4265
	3850-19
VT23512-15	★ 4265
	3853-45
VT23512-20	★ 4265
	3853-50
VT23512-25	★ 4265
	3853-56
VT23512-30	★ 4265
	3853-61
VT23512-35	★ 4265
	3853-63
VT23512-45	★ 4265
	3853-65
VT2364-15	★ 4265
	3850-50
VT2364-25	★ 4265
	3850-118
VT2364-30	★ 4265
	3851-36
VT2364-45	★ 4265
	3851-78
VT2365-15	★ 4265
	3850-52
VT2365-20	★ 4265
	3850-86
VT2365-30	★ 4265
	3851-49
VT2365-45	★ 4265
	3851-87
VT2366-15	★ 4265
	3850-53
VT2366-20	★ 4265
	3850-87
VT2366-30	★ 4265
	3851-50
VT2366-45	★ 4265
	3851-88
VT2367	3850-20
VT2368	3850-25
VT2369-15	3850-54
VT2369-20	3850-88
VT2369-25	3851-9
VT2369-30	3851-51
VT2369-35	3851-63
VT2369-45	3851-89
VT23C1024	★ 4265
	3853-72
VT23C1024-15	★ 4265
	3853-73
VT23C1024-20	★ 4265
	3853-80
VT23C1024-30	★ 4265
	3853-96
VT23C1024-45	★ 4265
	3853-104
VT23C64	3850-94
VT27C128	★ 4265
VT27C128	★ 4272
	3823-2
VT27C128-20	★ 4265
VT27C128-20	★ 4272
	3822-102
VT27C128-25	★ 4265
VT27C128-25	★ 4272
	3823-19
VT27C128-30	★ 4265
VT27C128-30	★ 4272
	3823-45
VT27C256	★ 4265
VT27C256	★ 4273
	3824-20
VT27C256-20	★ 4265
VT27C256-20	★ 4273
	3824-21
VT27C256-25	★ 4265
VT27C256-25	★ 4273
	3824-43
VT27C256-30	★ 4265
VT27C256-30	★ 4273
	3824-67
VT27C512	★ 4265
VT27C512	★ 4274
	3824-96
VT27C512-20	★ 4265
VT27C512-20	★ 4274
	3824-93
VT27C512-25	★ 4265
VT27C512-25	★ 4274
	3824-95
VT27C512-30	★ 4265
VT27C512-30	★ 4274
	3824-103
VT27C64	★ 4265
VT27C64	★ 4271
	3821-94
VT27C64-17	★ 4265
VT27C64-17	★ 4271
	3821-77
VT27C64-20	★ 4265
VT27C64-20	★ 4271
	3821-82
VT27C64-25	★ 4265
VT27C64-25	★ 4271
	3821-113
VT27C64-30	★ 4265
VT27C64-30	★ 4271
	3822-27
VT28H63	★ 4265
	3813-8
VT28H64	★ 4265
	3813-9
VT64H1	★ 4266
VT64H1	★ 4269
	3846-99
VT64H1-35	★ 4266
VT64H1-35	★ 4269
	3846-100
VT64H1-45	★ 4266
VT64H1-45	★ 4269
	3847-18
VT64H1-55	★ 4266
VT64H1-55	★ 4269
	3847-37
VT64KH1	3846-101
VT64KS4	★ 4265
VT64KS4	★ 4270
	3844-105
VT65KS4	★ 4265
VT65KS4	★ 4270
	3844-112

VTC

Device	Page-Line
54/74ALS	¶ 354-5
54/74LS	¶ 354-5
54/74S	¶ 354-5
V54/74ACT	¶ 353-3
V54/74ACT	¶ 354-3
V54/74ACT	¶ 354-5
V54/74ACT	¶ 354-6
V54/74ACT	¶ 354-7
V54/74ACT	¶ 354-9
V54/74ACT	¶ 355-8
V54/74ACT	¶ 358-7
V54ACT240	★ 1367
V54ACT240	★ 1370
	839-60
V54ACT241	★ 1367
V54ACT241	★ 1370
	840-47
V54ACT244	★ 1367
V54ACT244	★ 1370
	840-64
V54ACT245	★ 1368
V54ACT245	★ 1370
V54ACT245	★ 1371
	841-104
V54ACT373	★ 1367
V54ACT373	★ 1372
	829-107
V54ACT374	★ 1367
V54ACT374	★ 1372
	822-42
V54ACT465	★ 1367
V54ACT465	★ 1370
	810-48
V54ACT466	★ 1367
V54ACT466	★ 1370
	811-99
	811-100
	811-101
	811-102
V54ACT467	★ 1367
V54ACT467	★ 1370
	810-49
V54ACT468	★ 1367
V54ACT468	★ 1370
	811-103
	811-104
	811-108
	811-109
V54ACT533	★ 1367
V54ACT533	★ 1372
	830-31
V54ACT534	★ 1367
V54ACT534	★ 1372
	821-129
V54ACT540	★ 1367
V54ACT540	★ 1370
	839-61
V54ACT541	★ 1367
V54ACT541	★ 1370
	810-50
V54ACT563	★ 1367
V54ACT563	★ 1372
	830-32
V54ACT564	★ 1373
	821-130
V54ACT573	★ 1367
V54ACT573	★ 1372
	829-108
V54ACT574	★ 1367
V54ACT574	★ 1373
	822-43
V54ACT575	★ 1367
V54ACT575	★ 1373
	822-160
V54ACT576	★ 1367
V54ACT576	★ 1373
	821-131
V54ACT577	★ 1367
V54ACT577	★ 1373
	822-32
V54ACT580	★ 1367
V54ACT580	★ 1372
	830-33
V54ACT620	★ 1367
V54ACT620	★ 1371
	841-26
V54ACT623	★ 1367
V54ACT623	★ 1371
	841-27
V54ACT640	★ 1367
V54ACT640	★ 1371
	841-63
V54ACT643	★ 1367
V54ACT643	★ 1371
	841-64
V54ACT645	★ 1367
V54ACT645	★ 1371
	841-105
V54ACT821	★ 1367
V54ACT821	★ 1373
V54ACT821	★ 1374
	842-100
V54ACT822	★ 1367
V54ACT822	★ 1373
V54ACT822	★ 1374
	842-98
V54ACT823	★ 1367
V54ACT823	★ 1373
V54ACT823	★ 1374
V54ACT823	★ 1375
	842-96
V54ACT824	★ 1367
V54ACT824	★ 1373
V54ACT824	★ 1375
	822-162
V54ACT825	★ 1367
V54ACT825	★ 1373
	822-44
V54ACT826	★ 1367
V54ACT826	★ 1373
	821-132
V54ACT827	★ 1367
V54ACT827	★ 1370
V54ACT827	★ 1374
	810-142

¶ Indicates page number in Application Note Directory.
★ Indicates additional data is provided on the page noted.

VTC (Cont'd)

Device	Page-Line
V54ACT828	★ 1367
V54ACT828	★ 1370
V54ACT828	★ 1374
	810-140
V54ACT841	★ 1367
V54ACT841	★ 1372
V54ACT841	★ 1374
	831-35
V54ACT842	★ 1367
V54ACT842	★ 1372
V54ACT842	★ 1374
	831-33
V54ACT843	★ 1367
V54ACT843	★ 1372
V54ACT843	★ 1375
	831-43
V54ACT844	★ 1367
V54ACT844	★ 1372
V54ACT844	★ 1375
	831-41
V54ACT845	★ 1367
V54ACT845	★ 1372
V54ACT845	★ 1375
	831-39
V54ACT846	★ 1367
V54ACT846	★ 1372
V54ACT846	★ 1375
	831-37
V54ACT861	★ 1367
V54ACT861	★ 1371
V54ACT861	★ 1374
	842-114
V54ACT862	★ 1367
V54ACT862	★ 1371
V54ACT862	★ 1374
	842-115
V54ACT863	★ 1367
V54ACT863	★ 1371
V54ACT863	★ 1375
	842-118
V54ACT864	★ 1367
V54ACT864	★ 1371
V54ACT864	★ 1375
	842-119
V54ACT874	★ 1367
V54ACT874	★ 1373
	820-76
V54ACT876	★ 1367
V54ACT876	★ 1373
	820-77
V54ACT878	★ 1367
V54ACT878	★ 1373
	820-78
V54ACT879	★ 1367
V54ACT879	★ 1373
	820-79
V54ACT880	★ 1367
V54ACT880	★ 1372
	829-21
V74ACT240	★ 1367
V74ACT240	★ 1370
	839-62
V74ACT241	★ 1367
V74ACT241	★ 1370
	840-48
V74ACT244	★ 1367
V74ACT244	★ 1370
	840-89
V74ACT245	★ 1367
V74ACT245	★ 1368
V74ACT245	★ 1371
	841-106
V74ACT373	★ 1367
V74ACT373	★ 1372
	829-109
V74ACT374	★ 1367
V74ACT374	★ 1372
	822-45
V74ACT465	★ 1367
V74ACT465	★ 1370
	810-51
V74ACT466	★ 1367
V74ACT466	★ 1370
	811-105
	811-106
V74ACT467	★ 1367
V74ACT467	★ 1370
	810-52
V74ACT468	★ 1367
V74ACT468	★ 1370
	811-107
	811-110
V74ACT533	★ 1367
V74ACT533	★ 1372
	830-34
V74ACT534	★ 1367
V74ACT534	★ 1373
	821-133
V74ACT540	★ 1367
V74ACT540	★ 1370
	839-63
V74ACT541	★ 1367
V74ACT541	★ 1370
	810-53
V74ACT563	★ 1367
V74ACT563	★ 1372
	830-35
V74ACT564	★ 1373
	821-134
V74ACT573	★ 1367
V74ACT573	★ 1372
	829-110
V74ACT574	★ 1367
V74ACT574	★ 1373
	822-46
V74ACT575	★ 1367
V74ACT575	★ 1373
	822-161
V74ACT576	★ 1367
V74ACT576	★ 1373
	821-135
V74ACT577	★ 1367
V74ACT577	★ 1373
	822-33
V74ACT580	★ 1367
V74ACT580	★ 1372
	830-36
V74ACT620	★ 1367
V74ACT620	★ 1371
	841-28
V74ACT623	★ 1367
V74ACT623	★ 1371
	841-29
V74ACT640	★ 1367
V74ACT640	★ 1371
	841-65
V74ACT643	★ 1367
V74ACT643	★ 1371
	841-66
V74ACT645	★ 1367
V74ACT645	★ 1371
	841-107
V74ACT821	★ 1367
V74ACT821	★ 1373
V74ACT821	★ 1374
	842-101
V74ACT822	★ 1367
V74ACT822	★ 1373
V74ACT822	★ 1374
	842-99
V74ACT823	★ 1367
V74ACT823	★ 1373
V74ACT823	★ 1375
	842-97
V74ACT824	★ 1367
V74ACT824	★ 1373
V74ACT824	★ 1375
	822-163
V74ACT825	★ 1367
V74ACT825	★ 1373
	822-47
V74ACT826	★ 1367
V74ACT826	★ 1373
	821-136
V74ACT827	★ 1367
V74ACT827	★ 1370
V74ACT827	★ 1374
	810-143
V74ACT828	★ 1367
V74ACT828	★ 1370
V74ACT828	★ 1374
	810-141
V74ACT841	★ 1367
V74ACT841	★ 1372
V74ACT841	★ 1374
	831-36
V74ACT842	★ 1367
V74ACT842	★ 1372
V74ACT842	★ 1374
	831-34
V74ACT843	★ 1367
V74ACT843	★ 1372
V74ACT843	★ 1375
	831-44
V74ACT844	★ 1367
V74ACT844	★ 1372
V74ACT844	★ 1375
	831-42
V74ACT845	★ 1367
V74ACT845	★ 1372
V74ACT845	★ 1375
	831-40
V74ACT846	★ 1367
V74ACT846	★ 1372
V74ACT846	★ 1375
	831-38
V74ACT861	★ 1367
V74ACT861	★ 1371
V74ACT861	★ 1374
	842-116
V74ACT862	★ 1367
V74ACT862	★ 1371
V74ACT862	★ 1374
	842-117
V74ACT863	★ 1367
V74ACT863	★ 1371
V74ACT863	★ 1375
	842-120
V74ACT864	★ 1367
V74ACT864	★ 1371
V74ACT864	★ 1375
	842-121
V74ACT874	★ 1367
V74ACT874	★ 1373
	820-80
V74ACT876	★ 1367
V74ACT876	★ 1373
	820-81
V74ACT878	★ 1367
V74ACT878	★ 1373
	820-82
V74ACT879	★ 1367
V74ACT879	★ 1373
	820-83
V74ACT880	★ 1367
V74ACT880	★ 1372
	829-22
VA033	★ 3742
	3329-48
VA2705	★ 3742
	3334-207
VA2705J	★ 3742
	3368-29
VA2705K	★ 3742
	3366-28
VA2705L	★ 3742
	3363-34
VA2705M	★ 3742
	3366-27
VA2705N	★ 3742
	3363-33
VA2706	★ 3742
	3334-208
VA2706J	★ 3742
	3368-60
VA2706K	★ 3742
	3368-55
VA2706L	★ 3742
	3368-24
VA2707	★ 3742
	3368-25
VA2715	★ 3742
	3334-209
VA2716	★ 3742
	3334-210
VA4705	★ 3742
	3334-211
VA4705J	★ 3742
	3373-46
VA4705K	★ 3742
	3372-8
VA4705L	★ 3742
	3370-15
VA4705M	★ 3742
	3372-7
VA4705N	★ 3742
	3370-14
VA4706	★ 3742
	3334-212
VA4706J	★ 3742
	3374-16
VA4706K	★ 3742
	3374-8
VA4706L	★ 3742
	3373-44
VA4707	★ 3742
	3373-45
VA705	★ 3742
	3334-213
VA705J	★ 3742
	3357-82
VA705K	★ 3742
	3354-12
VA705L	★ 3742
	3346-130
VA705M	★ 3742
	3354-11
VA705N	★ 3742
	3346-129
VA706	★ 3742
	3334-214
VA706J	★ 3742
	3357-158
VA706K	★ 3742
	3357-133
VA706L	★ 3742
	3357-79
VA707	★ 3742
	3357-80
VJ800	★ 4818
	4465-22
	¶ 444-17
VL1000	★ 4815
	4482-23
	¶ 445-18
VL2000	4494-52
VL2000	★ 4820
	4482-24
	¶ 445-19
VM101	★ 3270
	1469-23
VM104	★ 3270
	1468-115
VM104L	★ 3270
	1468-116
VM108	★ 3270
	1468-117
VM114	1468-113
VM116	1469-24
VM117	1469-16
VM1172	★ 3270
	1468-119
VM1174	★ 3270
	1468-123
VM1176	★ 3270
	1469-1
VM1178	1469-5
VM118	1469-17
VM1182	★ 3270
	1468-120
VM1184	★ 3270
	1468-124
VM1186	★ 3270
	1469-2
VM122	★ 3270
	1468-118
VM214	★ 3270
	1469-26
VM216	★ 3270
	1469-25
VM217	1469-18
VM2172	★ 3270
	1468-121
VM2174	★ 3270
	1468-125
VM2176	★ 3270
	1469-3
VM2178	★ 3270
	1469-6
VM218	1469-19
VM2182	★ 3270
	1468-122
VM2184	★ 3270
	1468-126
VM2186	★ 3270
	1469-4
VM2188	★ 3270
	1469-7
VM542	★ 3270
	1469-32
VT210	★ 3270
	1468-56
VT211	★ 3270
	1468-57

Wintek Corp.

Device	Page-Line
ABP04	★ 2118
	2037-36
ABP07	★ 2118
APP07	2037-37
MAI04	★ 2118
	2037-11
MAI20	★ 2118
	2037-12
MCC14	★ 2118
	2011-29
MCH18	★ 2118
	2005-33
MCH38	★ 2118
	2005-34
MCH68	★ 2118
	2005-35
MCI11	★ 2118
	2037-39
MCL10	★ 2118
	2005-36
MCL45	★ 2118
	2005-31
MCS00	★ 2118
	2037-19
MCT10	★ 2118
	2037-13
MCV45	★ 2118
	2005-32
MDS08	★ 2118
	2037-15
MDS44	★ 2118
	2037-14
MDS80	★ 2118
	2037-16
MFC04	★ 2118
	2037-7
MGP00	★ 2118
	2037-22
MP800	★ 2118
MPB00	2037-38
MPI08	★ 2118
	2037-29
MRR19	★ 2118
	2037-32
MRR39	★ 2118
	2037-33
MRR49	★ 2118
	2037-31
MSI08	★ 2118
	2037-26
smARTWORK	4989-1

Xicor

Device	Page-Line
8051	¶ 432-18
X2001	★ 4277
	3811-54
	¶ 432-16
X2001-20	★ 4277
	3811-48
X2001-25	★ 4277
	3811-66
X2002	★ 4277
	3811-72
	¶ 432-16
X2002-20	★ 4277
	3811-67
X2002-25	★ 4277
	3811-70
X2004	★ 735
X2004	★ 4277
	3811-94
	¶ 432-16
X2004-20	★ 735
X2004-20	★ 4277
	3811-79
X2004-25	★ 735
X2004-25	★ 4277
	3811-86
X2004M	★ 735
X2004M	★ 4277
	3811-95
X2004M-25	★ 735
X2004M-25	★ 4277
	3811-87
X2200 Series	¶ 432-17
X2201A	★ 4276
	3811-103
	¶ 432-16
X2210	★ 735
X2210	★ 4276
	3811-23
	¶ 432-16
X2210/10	★ 735
X2210/10	★ 4276
	3811-24
X2210/5	★ 735
X2210/5	★ 4276
	3811-25
X2210A	★ 735
X2210A	★ 4276
	3811-26
X2210M	★ 735
X2210M	★ 4276
	3811-27
X2210M/10	★ 735
X2210M/10	★ 4276
	3811-28
X2210M/5	★ 735
X2210M/5	★ 4276
	3811-29
X2212	★ 735
X2212	★ 4276
	3811-58
	¶ 432-16
X2212/10	★ 735
X2212/10	★ 4276
	3811-59
X2212/5	★ 735
X2212/5	★ 4276
	3811-60
X2212A	★ 735
X2212A	★ 4276
	3811-61
X2212M	★ 735
X2212M	★ 4276
	3811-62
X2212M/10	★ 735
X2212M/10	★ 4276
	3811-63
X2212M/5	★ 735
X2212M/5	★ 4276
	3811-64
X2400	¶ 432-16
X2404	★ 736
X2404	★ 4278
	3811-76
X2443	¶ 432-13
X2444	★ 736
X2444	★ 4278
	3811-5
	¶ 432-12
	¶ 432-14
	¶ 432-18
X2444/10	★ 736
X2444/10	★ 4278
	3811-6
X2444M	★ 736
X2444M	★ 4278
	3811-13
X2444M/10	★ 736
X2444M/10	★ 4278
	3811-7
X24C04	★ 4278
	3811-75
X24C16	★ 4278
X24C16	★ 4282
	3812-12
X2616	3812-13
X2664	★ 4280
	3813-4
X2804A	★ 734
X2804A	★ 4279
	3811-90
	¶ 432-5
	¶ 432-7
	¶ 435-4
X2804A-25	★ 734
X2804A-25	★ 4279
	3811-82
X2804A-35	★ 734
X2804A-35	★ 4279
	3811-97
X2804A-45	★ 734
X2804A-45	★ 4279
	3811-100

Arranged alphanumerically from left to right.

ADVERTISERS' PRODUCT INDEX

Xicor (Cont'd)

Device	Page-Line
X2804AM	★ 734
X2804AM	★ 4279
	3811-91
X2804AM-35	★ 734
X2804AM-35	★ 4279
	3811-98
X2804AM-45	★ 734
X2804AM-45	★ 4279
	3811-101
X2816A	★ 734
X2816A	★ 4279
	3812-75
	¶ 432-5
	¶ 432-7
	¶ 432-20
	¶ 435-4
X2816A-25	★ 734
X2816A-25	★ 4279
	3812-49
X2816A-35	★ 734
X2816A-35	★ 4279
	3812-96
X2816A-45	★ 734
X2816A-45	★ 4279
	3812-114
X2816AM	★ 734
X2816AM	★ 4279
	3812-76
X2816AM-35	★ 734
X2816AM-35	★ 4279
	3812-97
X2816AM-45	★ 734
X2816AM-45	★ 4279
	3812-115
X2816B	★ 734
X2816B	★ 4279
	3812-19
X2816H	★ 734
X2816H	★ 4279
	3812-14
X2818A	¶ 432-5
X28256	★ 4280
	3813-100
	¶ 432-8
X2864A	★ 734
X2864A	★ 4280
	3813-56
	¶ 432-19
	¶ 432-20
X2864A-20	★ 734
X2864A-20	★ 4280
	3813-28
X2864A-25	★ 734
X2864A-25	★ 4280
	3813-30
X2864A-35	★ 734
X2864A-35	★ 4280
	3813-60
X2864A-45	★ 734
X2864A-45	★ 4280
	3813-75
X2864AM	★ 734
X2864AM	★ 4280
	3813-46
X2864AM-25	★ 734
X2864AM-25	★ 4280
	3813-29
X2864AM-35	★ 734
X2864AM-35	★ 4280
	3813-61
X2864AM-45	★ 734
X2864AM-45	★ 4280
	3813-68
X2864B	★ 734
X2864B	★ 4280
	3813-17
X2864H	★ 734
X2864H	★ 4280
	3813-5
X28C256	★ 4280
	3813-94
X28C64	★ 4280
	3813-16
X9103	★ 4281
	3401-74
X9104	★ 4281
	3401-75
X9105	★ 4281
	3401-76
X9203	★ 4281
	3401-77
X9204	★ 4281
	3401-78
X9503	★ 4281
	3401-79
X9504	★ 4281
	3401-80
X9MME	3401-86

Zilog

Device	Page-Line
68000	¶ 370-6
8051	¶ 368-5
MC6801	¶ 368-5
Model 11	1823-1
Model 21	1823-2
Model 31	1823-3
Z-SCC	¶ 377-15
Z6132	¶ 439-15
Z765A	1467-61
Z8	¶ 369-18
Z8	¶ 376-18
Z8-SCB	2013-4
Z80	1460-76
	¶ 374-5
	¶ 374-14
	¶ 375-16
	¶ 375-17
	¶ 376-3
	¶ 376-4
	¶ 383-15
	1433-2
Z80-CTC	¶ 382-10
Z80-DART	1461-19
Z80-SIO	1461-1
	¶ 373-12
Z800	1461-24
	¶ 383-15
Z8000	1463-17
	¶ 368-4
	¶ 368-14
	¶ 369-1
	¶ 370-6
	¶ 375-2
	¶ 375-14
	¶ 376-5
	¶ 377-7
	¶ 383-3
	¶ 383-12
	¶ 383-16
	¶ 383-17
	¶ 383-18
Z80000	1465-12
Z8001	1463-18
	¶ 369-5
	1437-24
Z8001A	1463-19
Z8001A	1437-25
Z8001B	1463-20
Z8001B	1437-26
Z8001DM	2025-25
Z8002	1463-10
	¶ 377-3
	¶ 385-12
	1437-27
Z8002A	1463-11
Z8002A	1437-28
Z8002B	1463-12
Z8002B	1437-29
Z8002DM	2025-26
Z8003	1463-21
Z8003	1437-30
Z8003A	1463-22
Z8003B	1463-23
Z8004	1463-24
Z8004	1437-31
Z8004A	1463-25
Z8004B	1463-26
Z8010	¶ 369-5
Z8010-MMU	¶ 377-8
Z8010-Z-MMU	1463-71
Z8010A-Z-MMU	1463-72
Z8010B-Z-MMU	1463-73
Z8015-Z-PMMU	1463-78
Z8016	¶ 384-1
Z8016-Z-DTC	1463-47
Z8030	¶ 371-11
Z8030	¶ 381-12
Z8030	¶ 383-3
Z8030	¶ 384-2
Z8030-Z-SCC	1463-82
Z8030A-Z-SCC	1463-83
Z8031-Z-ASCC	1463-31
Z8031-Z-ASCC	1465-28
Z8036	¶ 365-12
Z8036	¶ 371-11
Z8036-Z-CIO	1463-40
Z8036A-Z-CIO	1463-41
Z8038	¶ 367-14
Z8038	¶ 371-11
Z8038	¶ 377-15
Z8038-Z-FIO	★ 1776
	1463-56
Z8038A-FIO	★ 1776
	1463-57
Z8060-Z-FIFO	★ 1774
	1463-51
Z8065-Z-BEP	1463-33
Z8068-Z-DCP	1463-44
Z8070-Z-APU	1461-23
Z8070-Z-APU	1463-27
Z8070-Z-APU	1465-13
Z8090-Z-UPC	1463-66
Z8094	1463-67
Z8094	1468-63
Z80A	1460-77
	¶ 377-3
	¶ 377-5
	1433-3
Z80A-DMA	1460-114
Z80A-SIO	¶ 377-5
Z80B	1460-78
Z80B	1433-4
Z80L	1460-79
Z80L	1433-5
Z80MCB/16	2013-6
Z80MCB/4	2013-7
Z8108	1461-22
Z8108	1433-6
Z8300-CPU	1460-82
Z8320-PIO	1460-130
Z8330-CTC	1460-100
Z8340-SIO	1461-15
Z8400	1460-80
Z8410-DMA	1460-115
Z8420-PIO	1460-128
Z8430-CTC	1460-98
Z8440-SIO	1461-2
Z8440A-SIO	1461-3
Z8440B-SIO	1461-4
Z8441-SIO	1461-5
Z8441B-SIO	1461-6
Z8442-SIO	1461-7
Z8442A-SIO	1461-8
Z8442B-SIO	1461-9
Z8449	1461-10
Z8470	¶ 375-17
Z8470-DART	1461-20
Z84C00	★ 1773
	1460-81
Z84C20	★ 1773
	1460-129
Z84C30	★ 1773
	1460-99
Z84C40	★ 1774
	1461-11
Z84C41	★ 1774
	1461-12
Z84C42	★ 1774
	1461-13
Z84C44	★ 1774
	1461-14
Z8500	¶ 371-12
Z8516	1466-82
Z8530	¶ 384-2
Z8530-SCC	★ 1775
	1468-43
Z8531-ASCC	1465-29
Z8536	¶ 365-12
Z8536	¶ 375-16
Z8536-CIO	★ 1775
	1465-53
Z8536A-CIO	★ 1775
	1465-54
Z8581	1469-108
Z8590	¶ 363-16
Z8590-UPC	1468-64
Z8594-UPC	★ 1776
	1468-65
Z8600	¶ 370-7
Z8600	¶ 373-14
Z8600	¶ 383-13
Z8601-12	★ 1774
	1433-7
Z8601-MCU	★ 1774
	1460-48
	★ 1774
	1433-8
Z8603-MCU	★ 1774
	1460-49
	★ 1774
	1433-9
Z8611	¶ 368-5
Z8611-12	1433-10
Z8611-MCU	1460-50
Z8611-MCU	1433-11
Z8612-12	1433-12
Z8612-MCU	1460-51
Z8612-MCU	1433-13
Z8613-12	1433-14
Z8613-MCU	1460-52
Z8613-MCU	1433-15
Z8671	¶ 384-3
Z8671-MCU	1460-53
Z8671-MCU	1433-16
Z8681-12	★ 1775
	1433-17
Z8681-MCU	★ 1775
	1460-54
	★ 1775
	1433-18
Z8682-MCU	1460-55
Z86L01	1460-56
Z86L11	1460-57
Z86L81	1460-58
Z86P11	1460-59
Z8800	★ 1776
	1460-60

Zycad

Device	Page-Line
Expediter	5024-2
Expediter	5068-37
Expediter 100	★ 5122
Expediter 200	★ 5122
Fault Evaluator	5030-2
Fault Evaluator	5068-13
Fault Evaluator	★ 5121
Logic Evaluator	5025-1
Logic Evaluator	5068-19
Logic Evaluator	★ 5120
Sys Development Engine	5027-1

¶ Indicates page number in Application Note Directory.
★ Indicates additional data is provided on the page noted.

WHAT'S NEW IN IC Updates

IF YOU NEED THE IC MASTER YOU NEED THE IC UPDATES

Not only will the IC UPDATES update your IC Master Catalog they will provide valuable IC application and selection information in every issue.

SPRING, SUMMER and FALL

and remember our toll free number for up-to-date product information: **800 443-0100 (EXT.) 518**

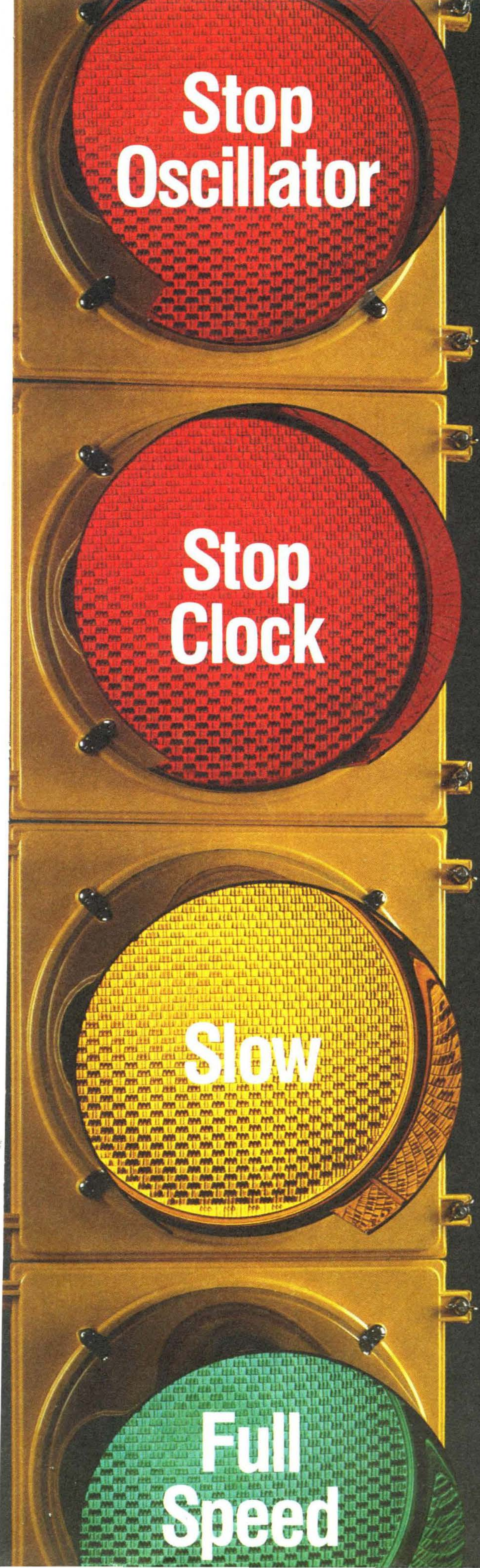

Street-wise designers: use the ultimate in speed and power control.

New Harris 82C85 Static Clock Controller operates in four low-power modes.

The new Harris 82C85 static CMOS clock controller/generator dramatically reduces power consumption in static CMOS systems by giving you four distinct operating modes.

- **Full Speed for top performance.**
- **Slow mode for low power and continuous operation.**
- **Stop Clock for low power and instant restart.**
- **Stop Oscillator for minimum power standby operation.**

Designed specifically for 80C86 and 80C88-based systems, the 82C85 responds to a software HALT command, stopping all system clocks automatically. The 82C85 can also be controlled by a flexible independent START and STOP control structure.

With a full DC-8MHz operating frequency range, the 82C85 allows you to control your system power and performance, tailoring them to your exact requirements.

Stop...With **no** loss of data! Accelerate...With **no** delay!

It's the control you've been waiting for — for your portable instrumentation, industrial process control or military guidance systems. In fact, it's easy to design into any CMOS system that needs extremely low operating power.

The new Harris 82C85 static CMOS clock controller/generator — the next generation of system control from the world's leader in 16-bit CMOS microprocessors.

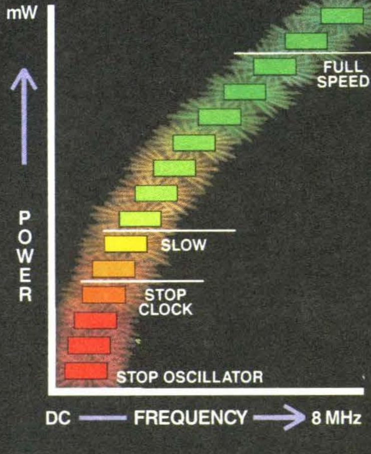

For full details, call 1-800-4 HARRIS, Ext. 1285 (in Canada, 1-800-344-2444, Ext. 1285) or write:
Harris Semiconductor
Digital Products
Division, P.O. Box 883,
MS 53-035, Melbourne,
Florida 32902-0883.

**Harris Semiconductor: Analog - Bipolar Digital
CMOS Digital - Gallium Arsenide - Semicustom
Custom - Hybrids**

HARRIS

For your information, our name is Harris.

MOTOROLA

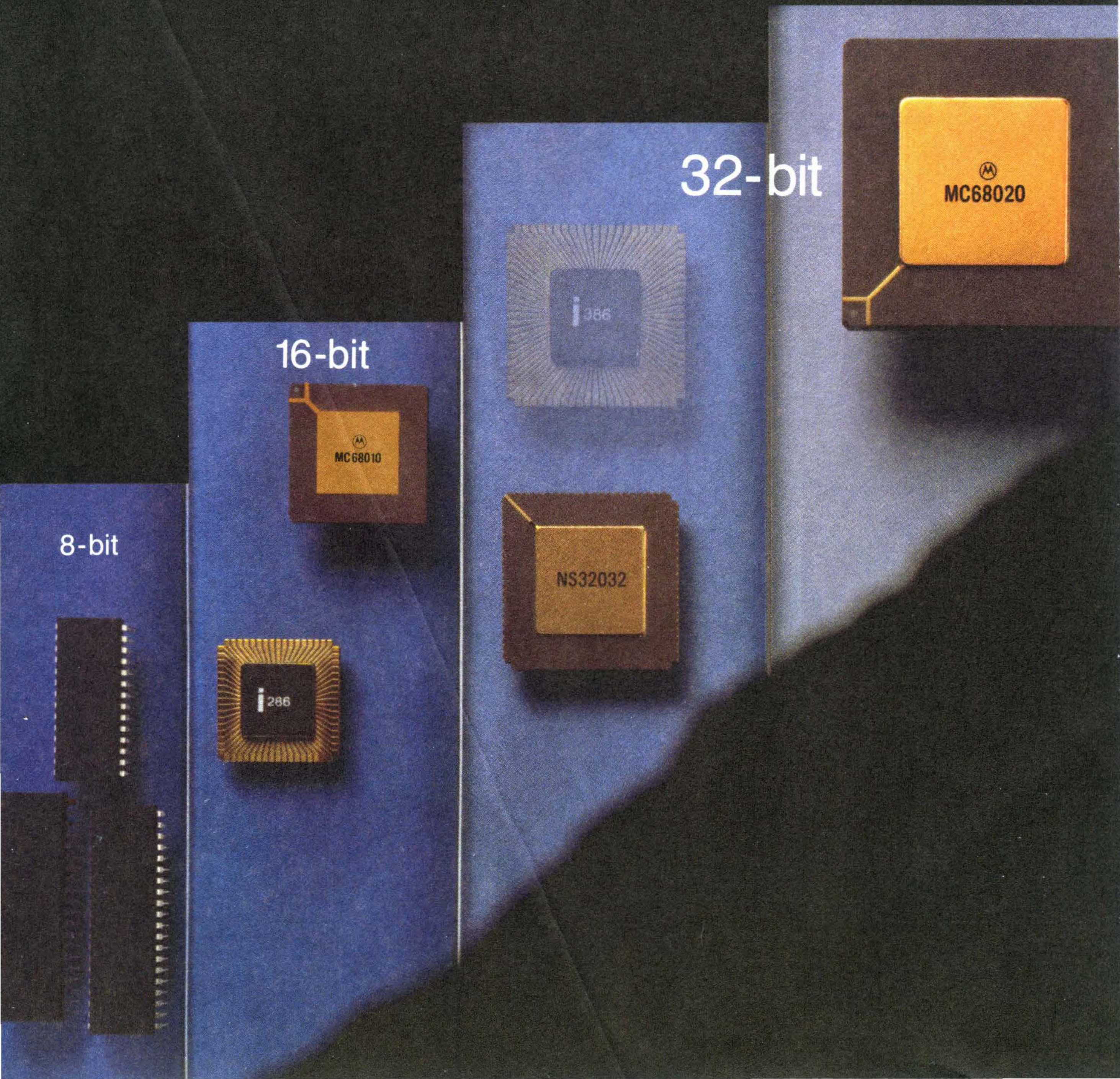
32-bit
MC68020
i386
NS32032
16-bit
MC68010
i286
8-bit

MC68020-Still the leader.

20 MHz performance, architecture and availability make it the preferred 32-bit system solution.

Recent system-performance measurements painstakingly carried out by current users on production hardware are documented in the latest Motorola benchmark brochure, BR322.

Performance superiority of the MC68020 over the closest challengers is clearly established. No 32-bit announced in 1985 will change that, or these facts.

No other Floating Point Coprocessor offers the performance, broad-based functionality and flexibility of Motorola's MC68881.

No other Paged Memory Management Unit gives the power and flexibility to the operating system of Motorola's MC68851.

And, Motorola's MC68020, MC68881 and MC68851 are all available now.

Of course, the decision is yours. Do you take the clear performance leader that's available now and go to market with systems that outperform their competition? Or, do you wait for something else, only to find it's too little, too late.

The highest-performance 32-bit system solution—MC68020.

In your drive for product leadership, reliance on an outdated architecture or failure to design in the highest performance can be fatal.

Motorola's MC68020 and powerful peripherals are the only 32-bit solution that provides both the architecture and system performance you need to stay ahead. The performance of all three 32-bit system-solution devices is maximized by advanced Motorola HCMOS manufacturing, which gives them reduced power dissipation for more reliable operation and greater chip densities for higher frequencies. Future operating frequencies of over 20 MHz are coming, and 12.5, 16.67 and 20 MHz operation is the present MC68020 norm.

Designed in by leaders around the world.

Here are just a few of the companies setting the pace around the world with MC68020-based products:

Apollo	CAE Workstation
Cal Tech	Hypercube Supercomputer
Convergent Technology	Business Supermicro
Charles River Data	Business Supermicro
Hewlett Packard	CAD/Inst. Workstn.
Honeywell	Multi-tasking Computer
Mitsubishi	Numerical Control/ Robotics
NCR	Multi-user Bus. Syst.
Sanyo	Graphics Workstation
Siemens	Telephone Switching System
Sun Microsystems	Tech. Prof. Workstation
Tektronix	A I System

This dozen and many others already have systems introduced and in production. Over 500 more are now working to design in the MC68020. Don't be outperformed. Keep up. Start now with the Motorola high-performance 32-bit system solution.

Powerful coprocessor system elements.

The MC68881 Floating Point Coprocessor (FPCP) and MC68851 Paged Memory Management Unit (PMMU) supplement the MC68020 in the most powerful solution for high-performance 32-bit systems.

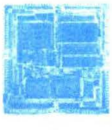

The PMMU efficiently supports a demand-paged virtual memory environment for multi-user and multitasking systems. It has an on-chip translation cache, and performs logical-to-physical address translation. The MC68851 also has unique features such as variable page sizes, optional tables for DMA support, and breakpoints and support for extended logical or physical caches, making it the best choice for systems requiring memory management.

Motorola's MC68881 is the only FPCP that meets and exceeds the IEEE floating point standard. It performs a full selection of transcendental and non-transcendental functions —root values, trig functions, exponentials, logs and more—in addition to the basic add, subtract, multiply and divide. No external software or extra ROM and RAM are needed. All functions are in hardware.

MC68881 performance is unmatched. Customers have reported up to 1000K Whetstones performance, more than 4x that of the closest competition.

User-code compatibility stretches your software investment.

Your system can incorporate the performance improvements of the MC68020 without massive code rewrites when its roots are in the M68000 Family, and its 100% upward user-compatibility. And, dynamic bus sizing even allows you to plug the MC68020 into existing 8- and 16-bit systems for upgraded performance and quick-turn designs. Of course, board level products inherit the compatibility features of the devices.

Now Motorola supplies the highest performance available for VMEbus, the world's most widely used 8-/16-/32-bit bus architecture, with the MC68020-based VME130 single-board computer.

One-on-one design-in help.

Get an engineer-to-engineer update on the latest for your 32-bit system.

1-800-521-6274

Call toll-free any workday, 8:00 a.m.—4:30 p.m., MST. If the call can't cover your needs, we'll have a field application engineer contact you.

We're
on your
design-in
team.

MOTOROLA

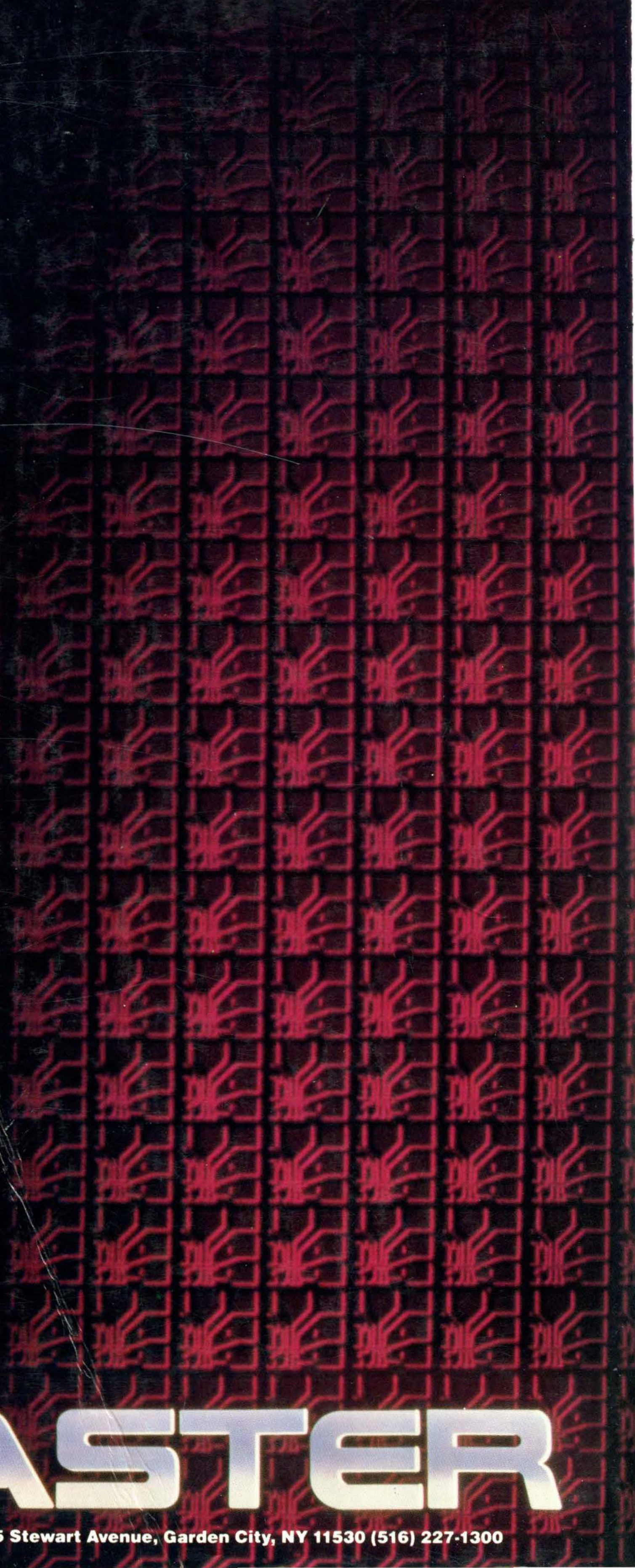

Engineering design begins with the

IC MASTER

Hearst **Hearst Business Communications, Inc., 645 Stewart Avenue, Garden City, NY 11530 (516) 227-1300**